DATSUN 280Z
MODEL S30 SERIES

SECTION EM

EM

ENGINE MECHANICAL

FIND

GENERAL DESCRIPTION ..... EM- 2
ENGINE DISASSEMBLY ..... EM- 3
INSPECTION AND REPAIR ..... EM- 7
ENGINE ASSEMBLY EM-21
SERVICE DATA AND SPECIFICATIONS EM-27
TROUBLE DIAGNOSES AND CORRECTIONS EM-33
SPECIAL SERVICE TOOLS EM-35

NISSAN

NISSAN MOTOR CO., LTD.
TOKYO, JAPAN

GENERAL DESCRIPTION

CONTENTS

L28 ENGINE EM-2
CYLINDER BLOCK EM-2
CRANKSHAFT EM-2
PISTONS AND CONNECTING RODS EM-2
CYLINDER HEAD EM-2
CAMSHAFT EM-2
VALVE MECHANISM EM-3
CAMSHAFT DRIVE EM-3
MANIFOLDS EM-3

L28 ENGINE

The L28 engine is a 2,753 cc (168.0 cu in) in-line, overhead camshaft, six-cylinder engine. It has an 86 mm (3.39 in) bore and 79 mm (3.11 in) stroke with a compression ratio of 8.3 : 1. The engine features a wedge-shaped combustion chamber, aluminum head, and a fully balanced 7-bearing crankshaft to turn out smooth, dependable power.

The cylinder block is cast in a single unit, and features deep skirting.

CYLINDER BLOCK

The cylinder block, a monoblock specially cast structure, employs the seven bearing-support system for quietness and higher durability. Of a highly rigid deep-skirt design, it requires no complicated tappet chamber because of the OHC engine system, and is thus light-weight.

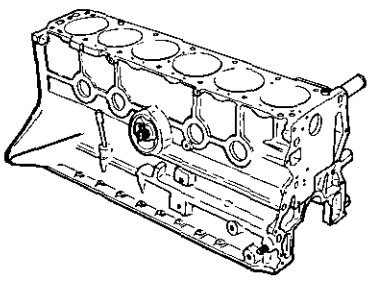

EM271

Fig. EM-1 Cylinder block

CRANKSHAFT

The crankshaft is made of a special forged steel. Provided with a high capacity balance weight, it is characterized by quietness and high durability at high speed operation. Main bearings are lubricated from oil holes which intersect the main oil gallery which runs parallel to the cylinder bores.

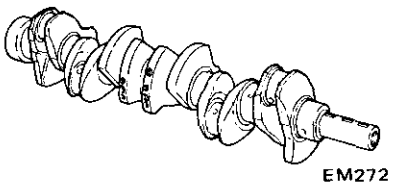

EM272

Fig. EM-2 Crankshaft

PISTONS AND CONNECTING RODS

New-design light-weight pistons are cast aluminum slipper-skirt type with invar-strut. The piston pin, a special hollow steel type is connected to the piston in a full floating fit, and is press-fitted onto the connecting rod.

Connecting rods are made of forged steel. Full pressure lubrication is directed to the connecting rods by drilled oil passages from the adjacent main bearing journal. Oil holes at the connecting rod journals are located so that oil is supplied to give maximum lubrication at full bearing load.

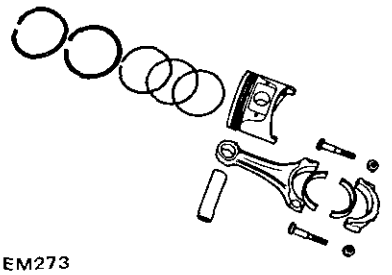

EM273

Fig. EM-3 Piston and connecting rod

CYLINDER HEAD

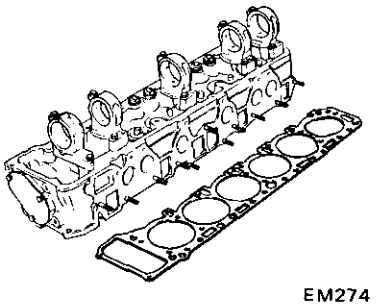

EM274

Fig. EM-4 Cylinder head

The cylinder head is made of a light, strong aluminum alloy with good cooling efficiency. A brass cast valve seat is used on the intake valve, while a heat resistant steel valve seat is installed on the exhaust valve.

These parts are all hot press-fitted.

CAMSHAFT

The camshaft is made of specially cast iron and is located inside the rocker cover. In this engine five aluminum alloy brackets support the camshaft.

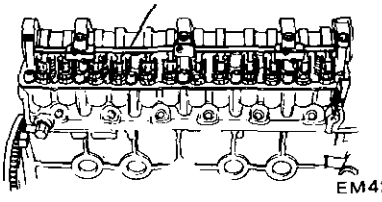

EM427

Fig. EM-5 Camshaft

Camshaft bearings are lubricated from oil holes which intersect the main oil gallery of the cylinder head.

There is no oil gallery in the camshaft and to lubricate the cam pad surface of the rocker arm an oil pipe with many oil holes is provided along the camshaft. This oil pipe is

supported by No. 2, 3 and 4 camshaft brackets; lubrication is supplied to the pipe from No. 2 and 4 brackets.

VALVE MECHANISM

The valve system has a pivot type rocker arm that is activated directly by the cam mechanism; this has made its moving parts considerably lighter and provides ideal high-speed performance.

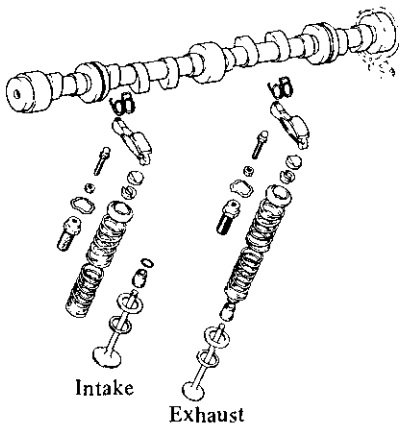

EM276

Fig. EM-6 Valve mechanism

CAMSHAFT DRIVE

The camshaft is driven by a double row roller chain driven by crankshaft. The tension of the chain is controlled by a chain tensioner which is operated by spring and oil pressure.

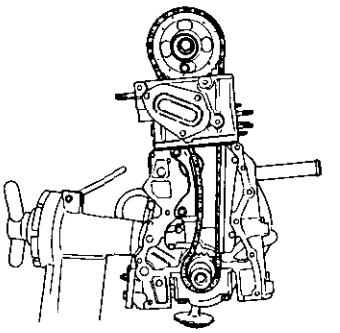

EM277

Fig. EM-7 Camshaft driving chain

MANIFOLDS

The intake manifold is cast aluminum.

The exhaust manifold is a dual exhaust system designed to prevent a decline in output due to exhaust interference and to increase output through inertia scavenging action. It is connected to exhaust pipes by flanges, which completely eliminate possibility of exhaust leaks.

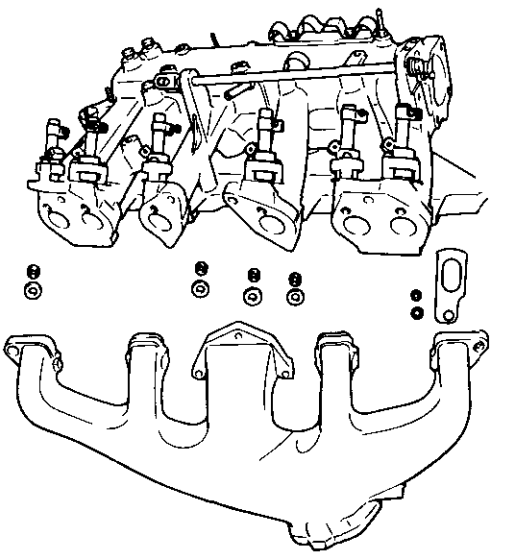

EM578

Fig. EM-8 Exhaust and intake manifold

ENGINE DISASSEMBLY

CONTENTS

PRELIMINARY CLEANING AND INSPECTING EM-3
DISASSEMBLY EM-4
PISTON AND CONNECTING ROD EM-6
CYLINDER HEAD EM-6

PRELIMINARY CLEANING AND INSPECTING

Before disassembling engine, note the following:

1. Fuel, oil or water may leak past cylinder head and block. Prior to disassembling, check cylinder head, front chain cover, oil pan and oil filter gaskets and crankshaft and water pump seals for signs of leakage past their gasketed surfaces.
2. Check fuel pump for condition; fuel hoses for deterioration, cracks or leakage of fuel past their jointed or connected surfaces.
3. Remove alternator, distributor and starter, and plug up distributor hole to prevent entry of foreign matter.
4. Wipe dust and mud off engine.
5. Inspect block, rocker cover, front chain cover, oil pan and all other outer parts for visual damage and broken or missing parts such as bolts and nuts.
6. Test all pipings and electrical circuits for discontinuity or broken or damaged insulation.

DISASSEMBLY

To remove engine from car, refer to related topic under "Engine Removal and Installation" in Chassis and Body Service Manual, Section ER.

1. Remove transmission from engine.
2. Thoroughly drain eigine oil and coolant by removing drain plugs.
3. Place engine assembly on engine stand.
(1) Remove fan and fan pulley.
(2) Remove engine mounting R.H.
(3) Remove oil filter using Oil Filter Wrench ST19320000.
(4) Remove oil pressure switch.
(5) Install engine attachment to cylinder block using bolt holes securing alternator bracket and engine mounting.
(6) Set engine on stand.

Engine Attachment ST05340000
Engine Stand ST0501S000

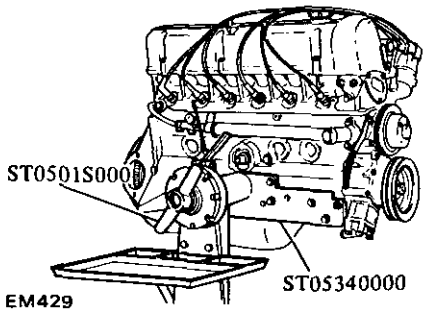

Fig. EM-9 Engine on engine stand

4. Remove oil level gauge.
5. Remove clutch assembly.
6. Remove high tension wires.
7. Remove spark plugs.
8. Remove distributor.
9. Remove air regulator ①, 3-way connector-to-rocker cover hose ②, throttle chamber-to-3-way connector hose ③, air regulator-to-connector hose ④ and 3-way connector-to-air regulator hose ⑤ as an assembly.

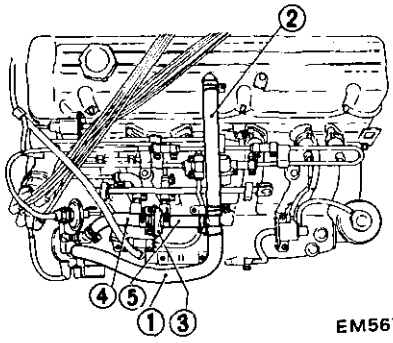

Fig. EM-10 Removing air regulator

10. Remove cold start valve ① and fuel pipe ② as an assembly.

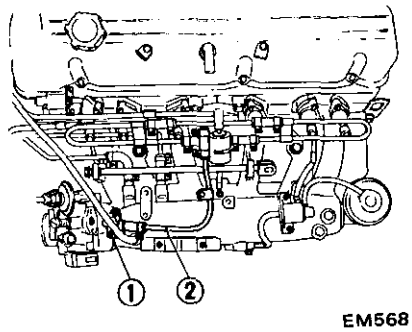

Fig. EM-11 Removing cold start valve

11. Remove E.G.R. control valve ① and vacuum switching valve ② and hoses as an assembly.

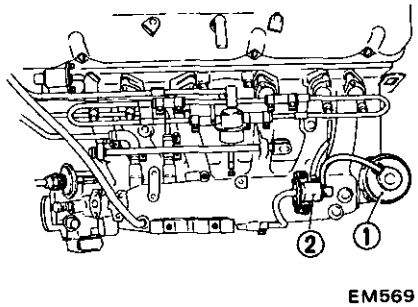

Fig. EM-12 Removing E.G.R. control valve and vacuum switching valve

12. Remove throttle chamber together with dash pot and B.C.D.D.

Note: Remove throttle chamber with hexagon wrench.

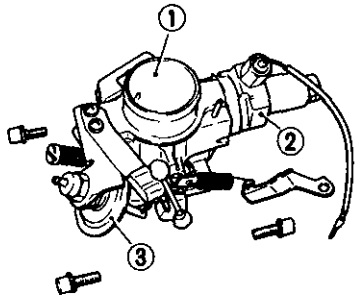

1 Throttle chamber
2 B.C.D.D.
3 Dash pot

EM551

Fig. EM-13 Removing throttle chamber

13. Remove fuel return hose, fuel feed hose, vacuum signal hose, canister purge hose pressure regulator and front engine slinger.

Notes:
a. Unfasten clip securing fuel inlet hose to injector.
b. Do not twist, bend or pull fuel inlet hose when removing.

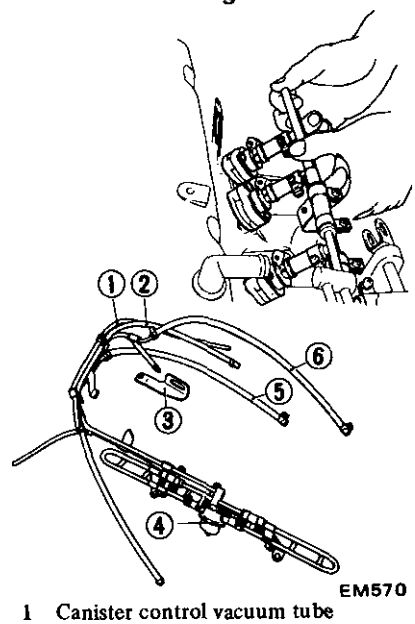

1 Canister control vacuum tube
2 Canister purge hose
3 Front engine slinger
4 Pressure regulator
5 Fuel feed hose
6 Fuel return hose

Fig. EM-14 Removing fuel hose

14. Remove water hose.
15. Remove thermostat housing, thermotime switch, temperature switch, water temperature switch and vacuum switching valve as an assembly.

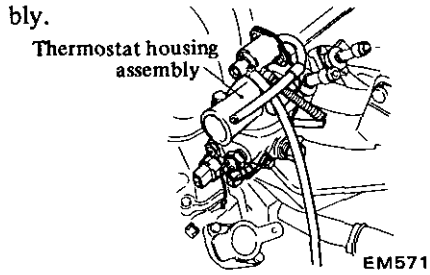

Fig. EM-15 Removing thermostat housing

16. Remove P.C.V. valve hose, sub heat shield plate and E.G.R. tube.

1 P.C.V. valve to connector hose
2 Sub heat shield plate
3 E.G.R. tube

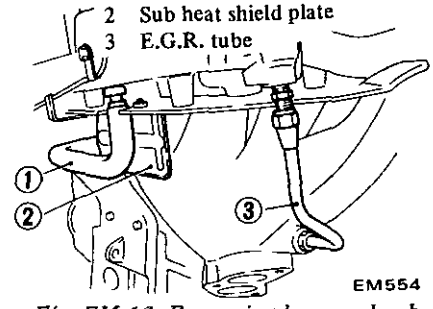

Fig. EM-16 Removing hose and sub heat shield plate

17. Remove intake manifold and heat shield plate as an assembly.
18. Remove exhaust manifold and rear engine slinger.
19. Loosen tension adjust bolt of idler pulley and remove compressor drive belt.
20. Remove two bolts fastening air conditioning compressor on lower side.

Then remove two bolts fastening compressor on upper side. While doing this, hold compressor by hand to prevent it from falling.

21. Remove idler pulley and air conditioning compressor mounting bracket.

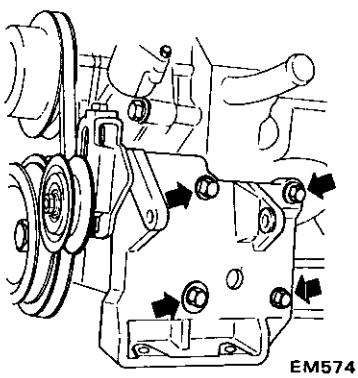

Fig. EM-17 Removing idler pulley and compressor mounting bracket

22. Remove crank pulley using Puller Crank Pulley ST16540000.

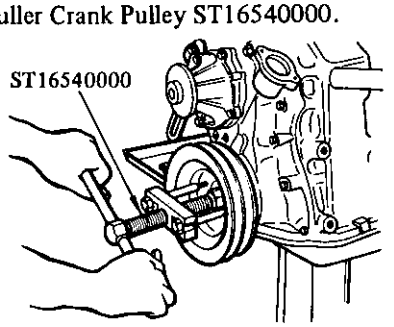

Fig. EM-18 Removing crank pulley

23. Remove water pump.
24. Remove camshaft sprocket using Chain Stopper ST17420001.

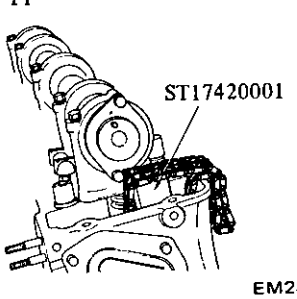

Fig. EM-19 Removing camshaft sprocket

25. Remove oil pipe.
26. Remove cylinder head assembly.

Use Cylinder Head Bolt Wrench ST10120000 to remove cylinder head bolts. Loosen bolts from ① to ⑭ as shown in Figure EM-20.

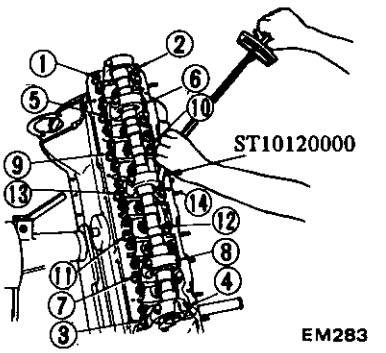

Fig. EM-20 Cylinder head bolt loosening sequence

Note: For convenience in replacing cylinder head, Chain Stopper ST17420001 is provided to support timing chain during the service operation. If this tool is used, timing marks on crankshaft sprocket and timing chain will remain aligned, thus eliminating the problem of re-aligning timing marks.

27. Invert engine.
28. Remove oil pan and oil strainer.
29. Remove oil pump and its drive spindle.
30. Remove front cover.

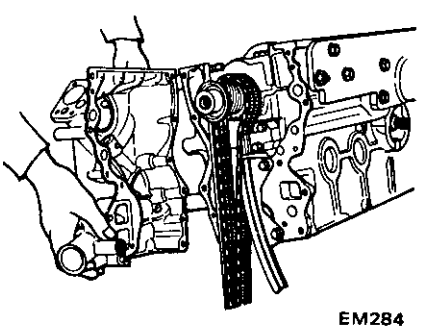

Fig. EM-21 Removing front cover

31. Remove chain tensioner and chain guides.

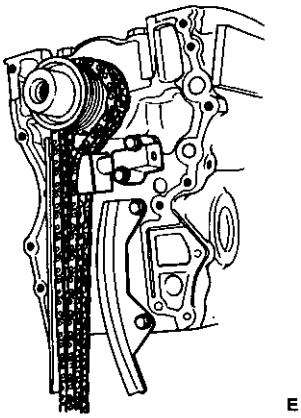

Fig. EM-22 Removing chain tensioner and timing chain

32. Remove timing chain.
33. Remove oil thrower, crankshaft worm gear and chain drive sprocket.

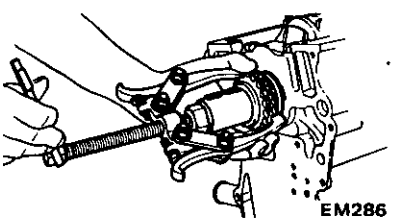

Fig. EM-23 Removing chain drive sprocket

34. Remove piston and connecting rod assembly. Extract connecting rod bearings and keep them in order.

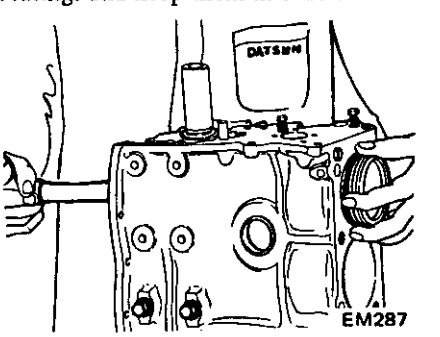

Fig. EM-24 Removing piston and connecting rod assembly

35. Remove flywheel and end plate. Be careful not to drop it.

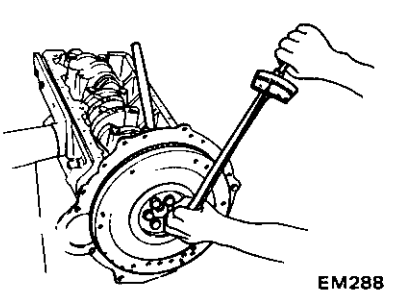

Fig. EM-25 Removing flywheel

36. Remove main bearing caps.

Use Crankshaft Main Bearing Cap Puller ST1651S000 to remove center and rear main bearing caps. Keep them in order.

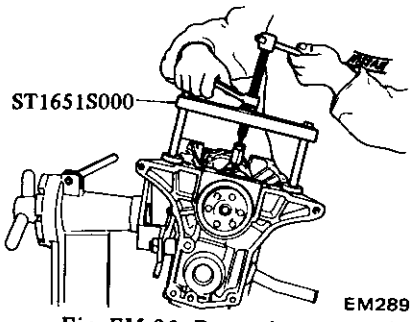

Fig. EM-26 Removing rear main bearing cap

37. Remove rear oil seal.

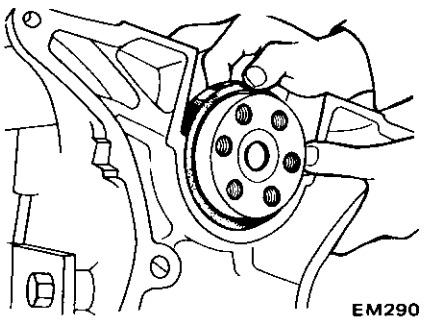

Fig. EM-27 Removing rear oil seal

38. Remove crankshaft.

39. Remove baffle plate and cylinder block net.

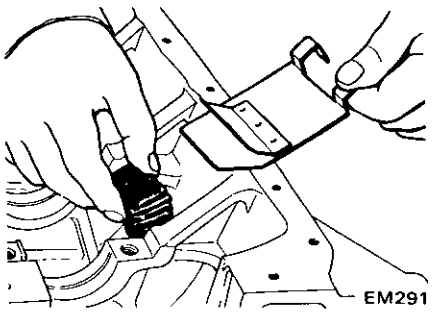

Fig. EM-28 Removing baffle plate and net

PISTON AND CONNECTING ROD

1. Remove piston rings with a ring remover.

Note: Avoid damaging piston rings by spreading excessively; excessive spreading makes them unfit for further service as a result of breakage or weakened tension.

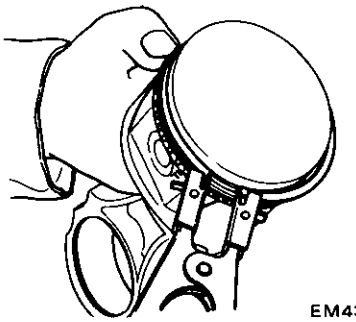

Fig. EM-29 Removing piston ring

2. Press out piston pin with Piston Pin Press Stand ST13060001.

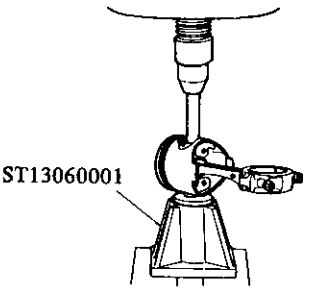

Fig. EM-30 Removing piston pin

3. Keep disassembled parts in order.

CYLINDER HEAD

1. Loosen valve rocker pivot lock nut and remove rocker arm by pressing valve spring down.

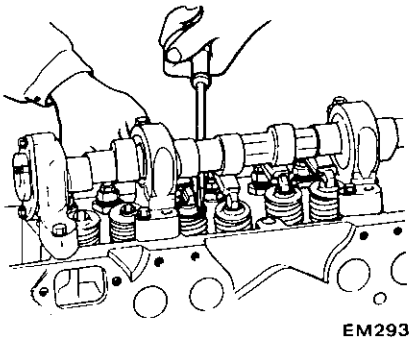

Fig. EM-31 Removing rocker arm

Note: Take care not to lose valve rocker guide.

2. Remove camshaft.

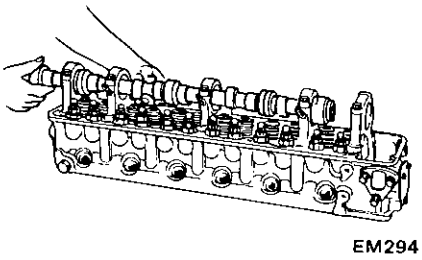

Fig. EM-32 Removing camshaft

Note: Be careful not to damage camshaft bearings and cam lobes.

3. Remove valves using Valve Lifter ST12070000.

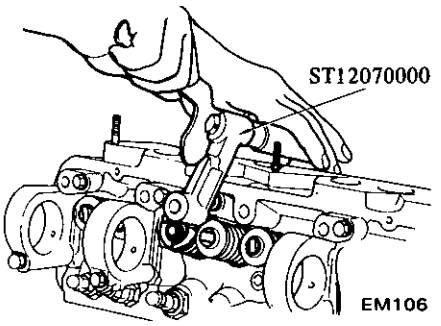

Fig. EM-33 Removing valve

4. Take care not to lose valve spring seat, oil seal, valve collet, and valve rocker guide.

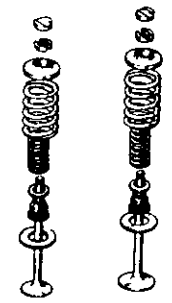

Fig. EM-34 Valve components

Note: Be sure to leave camshaft bearing intact, or else bearing center is liable to come out of alignment.

INSPECTION AND REPAIR

CONTENTS

PREPARATION FOR INSPECTION ..... EM- 7
CYLINDER HEAD AND VALVE ..... EM- 7
CHECKING CYLINDER HEAD MATING FACE ..... EM- 7
VALVE ASSEMBLY ..... EM- 7
VALVE SPRING ..... EM- 8
ROCKER ARM AND VALVE ROCKER PIVOT ..... EM- 9
VALVE GUIDE ..... EM- 9
VALVE SEAT INSERTS EM-10
CAMSHAFT AND CAMSHAFT BEARING EM-11
CAMSHAFT BEARING CLEARANCE EM-11
VALVE TIMING EM-11
CAMSHAFT ALIGNMENT EM-12
CYLINDER BLOCK EM-12
HOW TO MEASURE CYLINDER BORE EM-13
CYLINDER BORING EM-13
PISTONS, PISTON PINS AND PISTON RINGS EM-15
CONNECTING ROD EM-16
CRANKSHAFT EM-16
BUSHING AND BEARING EM-17
MEASUREMENT OF MAIN BEARING CLEARANCE EM-17
MEASUREMENT OF CONNECTING ROD BEARING CLEARANCE EM-17
FITTING BEARINGS EM-18
MISCELLANEOUS COMPONENTS EM-19
CRANKSHAFT SPROCKET, CAMSHAFT SPROCKET EM-19
CHAIN TENSIONER AND CHAIN GUIDE EM-20
FLYWHEEL EM-20
FRONT COVER AND REAR OIL SEAL ... EM-20

PREPARATION FOR INSPECTION

1. Before cleaning, check for signs of water or oil leaks in cylinder block and head.
2. Clean oil and carbon deposits from all parts. They should be free of gaskets or sealant.
3. Clean all oil holes with solvent and dry with compressed air. Make sure that they are not restricted.

CYLINDER HEAD AND VALVE

CHECKING CYLINDER HEAD MATING FACE

Note: Never remove camshaft bearings unless you have a suitable machine for boring camshaft bearing in line. If you once remove camshaft bearings, bearing centers will come out of alignment; reconditioning is very difficult without center borings.

1. Make a visual check for cracks and flaws.
2. Measure the surface of cylinder head *(on cylinder block side)* for warpage. If it is found to be beyond the limit designated below, regrind the affected surface with a surface grinder.

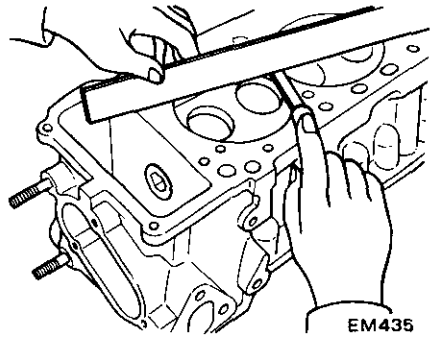

Fig. EM-35 Checking cylinder head surface

Head surface flatness

Standard	Maximum
less than 0.05 mm (0.0020 in)	0.1 mm (0.0039 in)

Surface grinding limit

The grinding limit of cylinder head can be determined from the cylinder block grinding.

Depth of cylinder head grinding is "A".

Depth of cylinder block grinding is "B".

The limit is as follows:

A + B = 0.2 mm (0.0079 in)

VALVE ASSEMBLY

1. Check each intake and exhaust valve for worn, damaged or deformed valve caps or stems. Correct or replace any valve that is faulty.
2. Valve face or valve stem end surface should be refaced with a valve grinder.

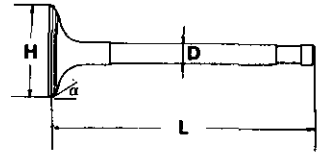

Fig. EM-36 Intake and exhaust valve dimensions

H	Valve head diameter mm (in)	In.	44.0 to 44.2 (1.732 to 1.740)
		Ex.	35.0 to 35.2 (1.378 to 1.386)
L	Valve length mm (in)	In.	114.9 to 115.2 (4.524 to 4.535)
		Ex.	115.7 to 116.0 (4.555 to 4.567)
D	Valve stem diameter mm (in)	In.	7.965 to 7.980 (0.3136 to 0.3142)
		Ex.	7.945 to 7.960 (0.3128 to 0.3134)
a	Valve seat angle In. & Ex.		45°30′

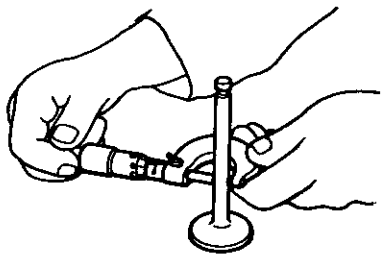

Fig. EM-37 Checking valve stem diameter

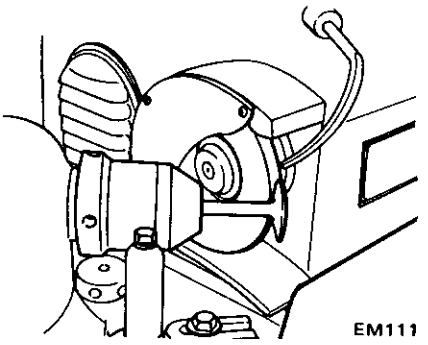

Fig. EM-38 Regrinding valve face

Note: When valve head has been worn down to 0.5 mm (0.0197 in) in thickness, replace the valve.
Grinding allowance for valve stem end surface is 0.5 mm (0.0197 in) or less.

VALVE SPRING

1. Check valve spring for squareness using a steel square and surface plate. If spring is out of square ("S" in Figure EM-39) beyond specified limit, replace.
2. Measure the free length and tension of each spring. If the measured value exceeds specified limit, replace spring.

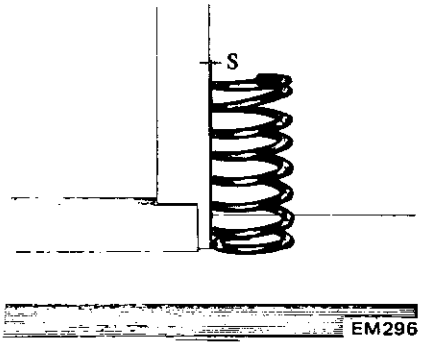

Fig. EM-39 Measuring spring squareness

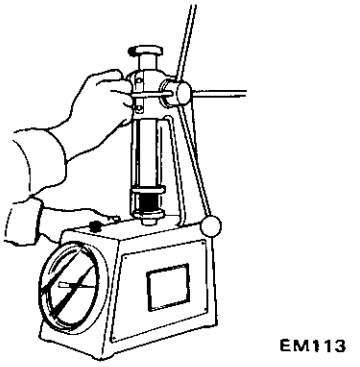

Fig. EM-40 Measuring spring tension

Valve spring specifications

Valve spring free length	mm (in)	
Outer		49.98 (1.968)
Inner		44.85 (1.766)
Valve spring pressured length (valve open)	mm/kg (in/lb)	
Intake Outer		29.5/49.0 (1.161/108)
Intake Inner		24.5/25.5 (0.965/56.2)
Exhaust Outer		29.5/49.0 (1.161/108)
Exhaust Inner		24.5/25.5 (0.965/56.2)
Valve spring assembled height (valve close)	mm/kg (in/lb)	
Outer		40.0/21.3 (1.575/47.0)
Inner		35.0/12.3 (1.378/27.1)
Out of square ("S")	mm (in)	
Outer		2.2 (0.087)
Inner		1.2 (0.047)

ROCKER ARM AND VALVE ROCKER PIVOT

Check pivot head and cam contact and pivot contact surfaces of rocker arm for damage or wear. If damage is found, replace them. A faulty pivot must be replaced together with its corresponding rocker arm.

VALVE GUIDE

Measure clearance between valve guide and valve stem. If clearance exceeds designated limit, replace worn parts or both valve and valve guide. In this case, it is essential to determine if such a clearance has been caused by a worn or bent valve stem or by a worn valve guide.

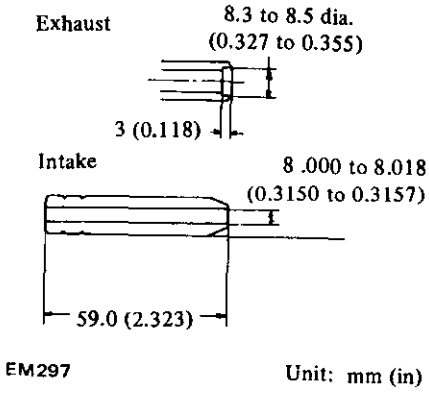

Fig. EM-41 Valve guide dimensions

Determining clearance

Precise measurement of clearance between valve stem and valve guide requires the aid of a micrometer and a telescope hole gauge. Using these gauges, check the diameter of valve stem in three places; top, center and bottom. Insert telescope hole gauge in valve guide bore, measuring at center. Subtract the highest reading of valve stem diameter from valve guide bore to obtain the stem-to-guide clearance.

Valve guide specifications

	Intake valve	Exhaust valve	Wear limit
Valve guide inner diameter mm (in)	8.000 to 8.018 (0.3150 to 0.3157)		——
Valve stem diameter mm (in)	7.965 to 7.980 (0.3136 to 0.3142)	7.945 to 7.960 (0.3128 to 0.3134)	——
Guide to stem clearance mm (in)	0.020 to 0.053 (0.0008 to 0.0021)	0.040 to 0.073 (0.0016 to 0.0029)	0.1

As an emergency expedient, a valve can be pushed into valve guide and moved to the left and right. If its tip deflects about 0.2 mm (0.0079 in) or more, it indicates that the clearance between stem and guide exceeds the maximum limit of 0.1 mm (0.0039 in).

Note: Valve should be moved in parallel with rocker arm. (Generally, a large amount of wear occurs in this direction.)

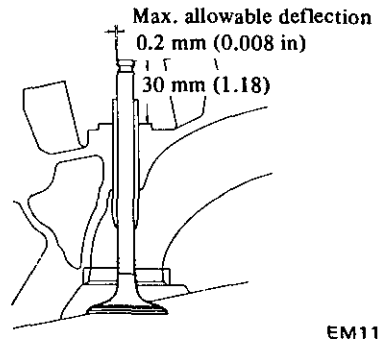

Fig. EM-42 Measuring clearance between valve stem and valve guide

Replacement of valve guide

Valve guide of 0.2 mm (0.0079 in) oversize diameter is available.

1. To remove old guides, use a drift and a press (under a 2-ton pressure) or a hammer.

Drive them out from combustion chamber side toward rocker cover. Heated cylinder head will facilitate the operation.

2. Ream cylinder head side guide hole at room temperature.

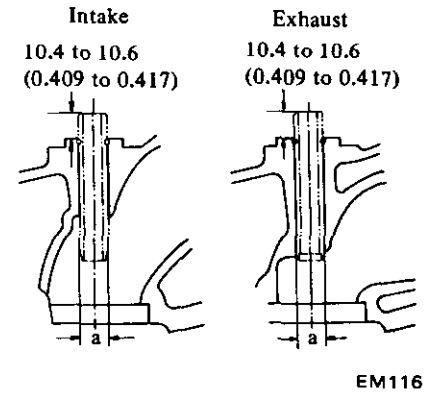

Fig. EM-43 Valve guide hole for service

Service valve guide outer diameter mm (in)	12.223 to 12.234 (0.4812 to 0.4817)
Service valve guide hole inner diameter (a) mm (in)	12.185 to 12.196 (0.4797 to 0.4802)
Interference fit of valve guide hole mm (in)	0.027 to 0.049 (0.0011 to 0.0019)

3. Carefully press new valve guide into head so that it will fit smoothly after heating cylinder head to 150 to 200°C (302 to 392°F).

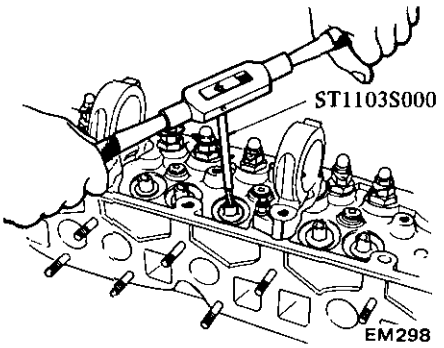

Fig. EM-44 Reaming valve guide

4. Ream bore with valve guide pressed in, using Valve Guide Reamer Set ST1103S000.

Reaming bore:
8.000 to 8.018 mm
(0.3150 to 0.3157 in)

5. Correct valve seat surface with new valve guide as the axis.

Unit: mm (in)

	L28
Intake	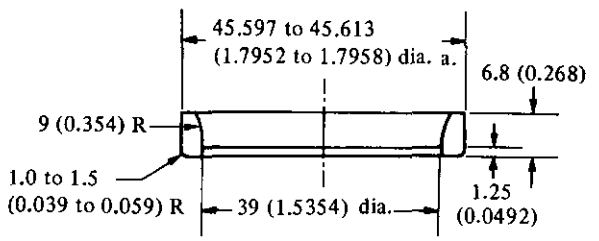
Exhaust	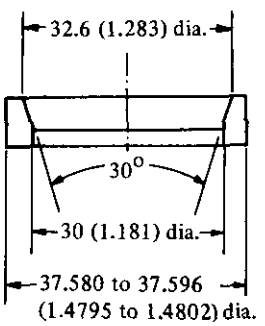

EM300

Fig. EM-46 Standard valve seat dimensions

VALVE SEAT INSERTS

Check valve seat inserts for any evidence of pitting at valve contact surface, and reseat or replace if worn excessively.

Valve seat insert of 0.5 mm (0.020 in) oversize is available for service in this engine.

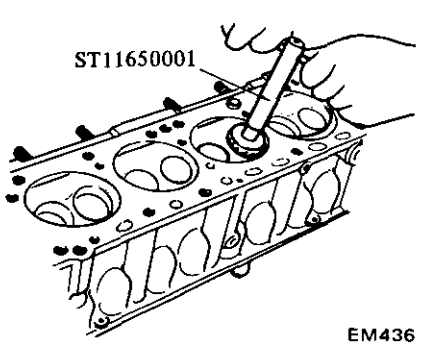

Fig. EM-45 Correcting valve seat

Cylinder head recess diameter

Intake	For standard insert	45.000 to 45.016 (1.7717 to 1.7723)
	For service insert	44.500 to 44.516 (1.7520 to 1.7526)
Exhaust	For standard insert	37.000 to 37.016 (1.4567 to 1.4573)
	For service insert	37.500 to 37.516 (1.4764 to 1.4770)

Interference fit mm (in)	Intake	0.081 to 0.113 (0.0032 to 0.0044)
	Exhaust	0.064 to 0.096 (0.0025 to 0.0038)

Replacing valve seat insert

1. Old insert can be removed by boring it out until it collapses. The machine depth stop should be set so that boring cannot continue beyond the bottom face of the insert recess in cylinder head.
2. Select a suitable valve seat insert and check its outside diameter.

3. Machine cylinder head recess to the concentric circles in valve guide center so that insert will have the correct fit.
4. Ream the cylinder head recess at room temperature.
5. Heat cylinder head to a temperature of 150 to 200°C (302 to 392°F).
6. Fit insert ensuring that it beds on the bottom face of its recess, and caulk more than 4 points.
7. Valve seats newly fitted should be cut or ground using Cutter Set Valve Seat ST11650001 at the specified dimensions as shown in Figure EM-47.
8. Apply small amount of fine grinding compound to valve contacting face and put valve into guide. Lap valve against its seat until proper valve seating is obtained. Remove valve and then clean valve and valve seat.

Unit: mm (in)

L28			
Intake	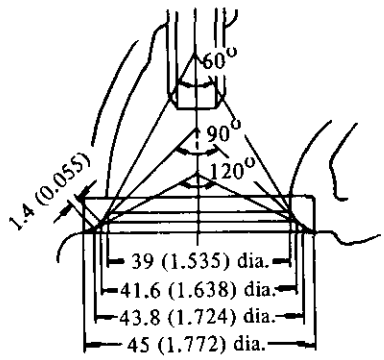	Exhaust	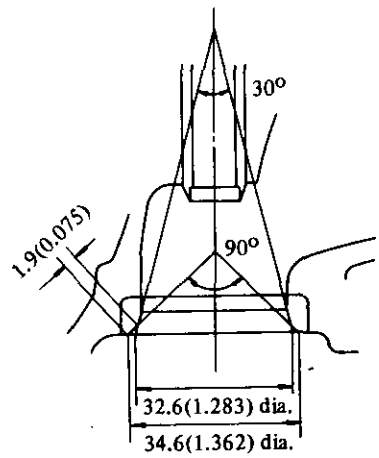

Fig. EM-47 Standard valve seat dimensions

CAMSHAFT AND CAMSHAFT BEARING

CAMSHAFT BEARING CLEARANCE

1. Measure the inside diameter of camshaft bearing with an inside dial gauge and the outside diameter of camshaft journal with a micrometer. If wear is found inside bracket, replace cylinder head assembly.

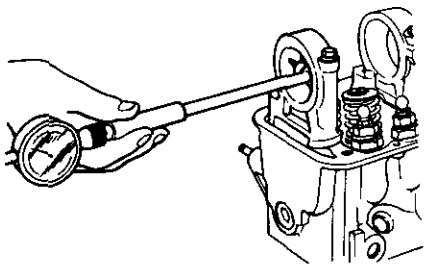

EM119

Fig. EM-48 Checking camshaft bearing

Camshaft journal to bearing clearance

L28	Standard	Wear limit
Oil clearance mm (in)	0.038 to 0.067 (0.0015 to 0.0026)	0.1 (0.0039)
Inner diameter of cam shaft bearing mm (in)	48.000 to 48.016 (1.8898 to 1.8904)	——

VALVE TIMING

This diagram will apply to all cylinders. If any valve is found out of specifications, one possibility is that cam lobe is worn or damaged. This calls for replacement of camshaft.

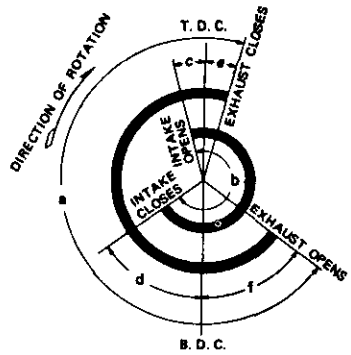

EM120

Fig. EM-49 Valve timing diagram

Unit: degree

a	b	c	d	e	f
248	248	16	52	14	54

L28	Standard	Bend limit
Camshaft bend mm (in)	0.02 (0.0008)	0.05 (0.0020)

CAMSHAFT ALIGNMENT

1. Check camshaft, camshaft journal and cam surface for bend, wear or damage. If damage is beyond limits, replace affected parts.

2. A bend valve is one-half of the reading obtained when camshaft is turned one full revolution with a dial gauge applied to the center journal.

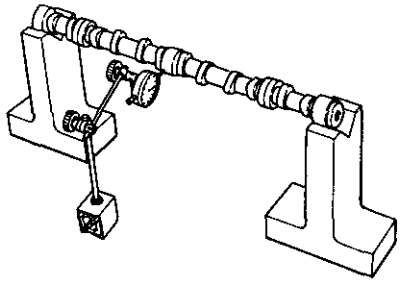

EM302

Fig. EM-50 Checking camshaft bend

Camshaft specifications

Standard height of cam	mm (in)	
Intake		40.30 to 40.35 (1.5866 to 1.5886)
Exhaust		40.30 to 40.35 (1.5866 to 1.5886)
Wear limit of cam height	mm (in)	0.25 (0.0098)
Allowable difference in diameter between max. worn and min. worn parts of camshaft journal	mm (in)	0.05 (0.0020)
Maximum tolerance in journal diameter	mm (in)	0.1 (0.0039)
Camshaft end play	mm (in)	0.08 to 0.38 (0.0031 to 0.0150)

L28	Standard	Maximum tolerance
Surface flatness mm (in)	less than 0.05 (0.0020)	0.10 (0.0039)

CYLINDER BLOCK

1. Visually check cylinder block for cracks or flaws.

2. Measure top of cylinder block (cylinder head mating face) for warpage. If warpage exceeds limits, correct it.

Surface grinding limit;

The grinding limit of cylinder block can be determined by the cylinder head grinding in an engine.

Depth of cylinder head grinding is "A".

Depth of cylinder block grinding is "B".

The limit is as follows:

A + B = 0.20 mm (0.0079 in)

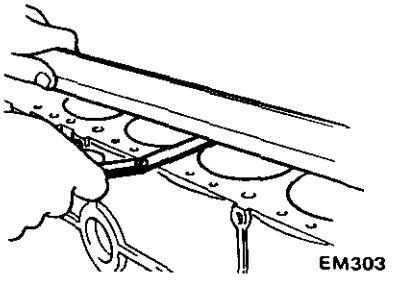

Fig. EM-51 Checking cylinder block surface

3. Using a bore gauge, measure cylinder bore for out-of-round or taper. If out-of-round or taper is excessive, rebore cylinder walls with a boring machine. Measurement should be taken along bores for taper and around bores for out-of-round. See Figure EM-53.

Out-of-round	X–Y
Taper	A–B

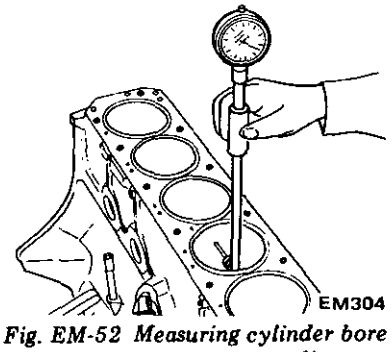

Fig. EM-52 Measuring cylinder bore diameter

4. When wear, taper or out-of-round is minor and within limits, remove step at topmost portion of cylinder using a ridge reamer or other similar tool.

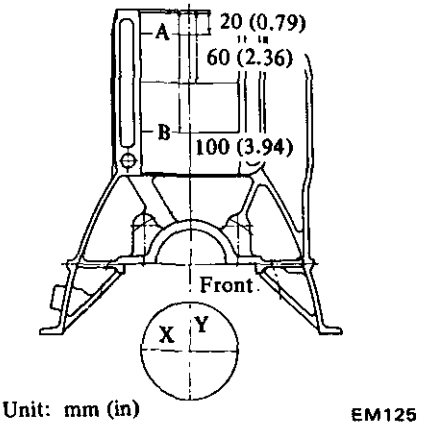

Fig. EM-53 Cylinder bore measuring positions

		Standard	Wear limit
Cylinder bore mm (in)	Inner diameter	86.000 to 86.050 (3.3858 to 3.3878)	0.20 (0.0079)
	Out-of-round	0.015(0.0006)	
	Taper	0.015 (0.0006)	
Difference cylinder bore	mm (in)	0.05 (0.0020)	0.20 (0.0079)

Oversize pistons (with pin) specifications

Piston diameter	mm (in)	
Standard		85.985 to 86.035 (3.3852 to 3.3872)
0.50 (0.0197)	Oversize	86.465 to 86.515 (3.4041 to 3.4061)
1.00 (0.0394)	Oversize	86.965 to 87.015 (3.4238 to 3.4258)

HOW TO MEASURE CYLINDER BORE

A bore gauge is used. Measure cylinder bore at top, middle and bottom positions toward A and B directions as shown in Figure EM-53 and record the measured values.

CYLINDER BORING

1. When any cylinder needs boring, all other cylinders must also be bored at the same time.
2. Determine piston oversize according to amount of wear of cylinder.
3. The size to which cylinders must be honed is determined by adding piston-to-cylinder clearance to the largest piston diameter (at piston skirt in thrust direction).

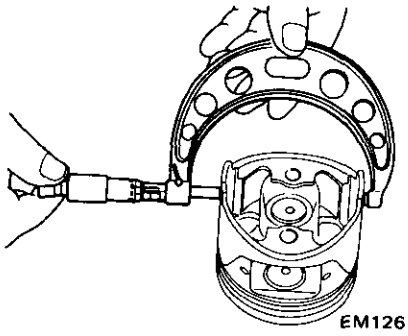

Fig. EM-54 Measuring piston diameter

Rebored size calculation

D = A + B − C = A + [0.005 to 0.025 mm (0.0002 to 0.0010 in)]

where,

D: Honed diameter
A: Skirt diameter as measured
B: Piston-to-wall clearance
C: Machine allowance [0.02 mm (0.0008 in)]

Note: To prevent strain due to cutting heat, bore cylinders in this order: 1-5-3-6-2-4.

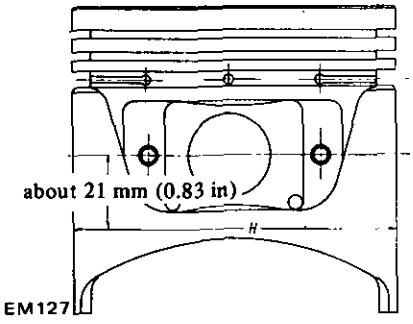

Fig. EM-55 Measuring piston skirt diameter

4. Do not cut too much out of cylinder bore at a time. Cut only 0.05 mm (0.0020 in) or so at a time.
5. Measurement of just machined cylinder bore requires utmost care since it is expanded by cutting heat.

6. As a final step, cylinders should be honed to size.
7. Measure the finished cylinder bore for out-of-round or tapered part.

8. Measure piston-to-cylinder clearance.

This clearance can be checked easily by using a feeler gauge and a spring balance hooked on feeler gauge, measuring the amount of force required to pull gauge out from between piston and cylinder.

Notes:

a. When measuring clearance, slowly pull feeler gauge straight upward.
b. It is recommended that piston and cylinder be heated to 20°C (68°F).

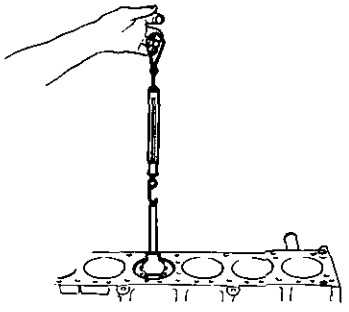

Fig. EM-56 Measuring piston fit in cylinder

		L28
Standard clearance	mm (in)	0.025 to 0.045 (0.0010 to 0.0018)
Feeler gauge	mm (in)	0.04 (0.0016)
Extracting force	kg (lb)	0.2 to 1.5 (0.44 to 3.31)

Note: If cylinder bore is worn beyond limits, use cylinder liner.
Undersize cylinder liners are available for service.
Interference fit of cylinder liner in cylinder block should be 0.08 to 0.09 mm (0.0031 to 0.0035 in).

Cylinder liner for service Unit: mm (in)

	L28	
	Outside diameter	Inner diameter
4.0 (0.1575) Undersize	90.00 to 90.05 (3.5433 to 3.5453)	85.50 to 85.60 (3.3661 to 3.3701)
4.5 (0.1772) Undersize	90.50 to 90.55 (3.5630 to 3.5650)	
5.0 (0.1969) Undersize	91.00 to 91.05 (3.5827 to 3.5846)	

PISTONS, PISTON PINS AND PISTON RINGS

1. Remove carbon from piston and ring grooves with a carbon scraper and a curved steel wire. Clean out oil slots in bottom land of oil ring groove.
2. Check for damage, scratches and wear. Replace if necessary.
3. Measure side clearance of rings in ring grooves as each ring is installed. Clearance with new pistons and rings should be as follows.

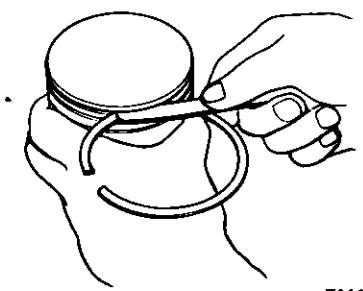

Fig. EM-57 Measuring piston ring side clearance

Side clearance

Unit: mm (in)

L28	Standard	Wear limit
Top ring	0.045 to 0.08 (0.0018 to 0.0031)	0.1 (0.0039)
Second ring	0.030 to 0.070 (0.0012 to 0.0028)	

Ring gap

Unit: mm (in)

L28	Standard	Wear limit
Top ring	0.23 to 0.38 (0.0091 to 0.0150)	1.0 (0.0394)
Second ring	0.15 to 0.30 (0.0059 to 0.0118)	
Oil ring	0.3 to 0.9 (0.0118 to 0.0354)	

4. Push ring into cylinder with a piston so as to place it squarely in cylinder; measure ring gap with a feeler gauge.

Ring should be placed to diameter at upper or lower limit of ring travel.

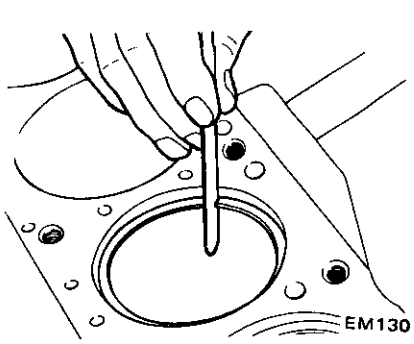

Fig. EM-58 Measuring ring gap

Notes:

a. **When piston ring only is to be replaced, without cylinder bore being corrected, measure gap at bottom of cylinder where wear is minor.**
b. **Oversize piston rings are available for service. [0.5 mm (0.020 in), 1.0 mm (0.039 in) oversize]**

5. Measure piston pin hole in relation to outer diameter of pin. If wear exceeds limit, replace each piston pin together with piston on which it is installed.
6. Determine the fitting of piston pin into piston pin hole to such an extent that it can be finger pressed at room temperature. This piston pin must be a tight press fit into connecting rod.

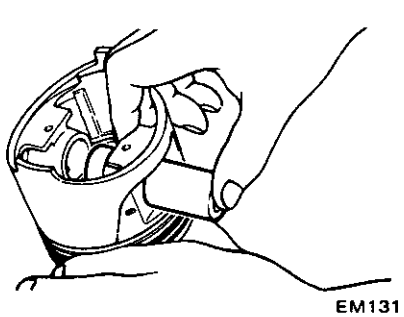

Fig. EM-59 Piston pin fitting

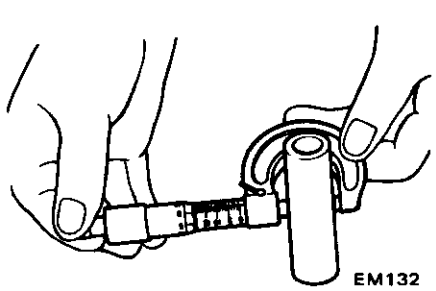

Fig. EM-60 Measuring piston pin diameter

Unit: mm (in)

	L28
Piston pin outside diameter	20.993 to 20.998 (0.8265 to 0.8267)
Piston pin hole diameter	21.001 to 21.008 (0.8268 to 0.8271)
Piston pin to piston clearance	0.006 to 0.013 (0.0002 to 0.00051)
Interference fit of piston pin to connecting rod	0.015 to 0.033 (0.00059 to 0.00130)

	Standard	Maximum
Connecting rod bend or torsion (per 100 mm or 3.94 in length) mm (in)	0.03 (0.0012)	0.05 (0.0020)

L28	Standard	Maximum
Big end play mm (in)	0.2 to 0.3 (0.008 to 0.012)	0.6 (0.024)

CONNECTING ROD

1. If a connecting rod has any flaw on either side of the thrust face or the large end, correct or replace it.

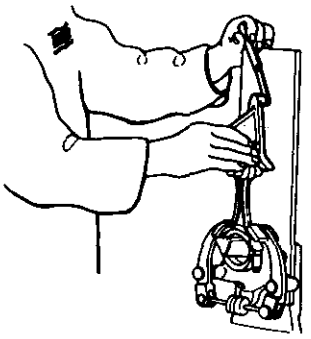

Fig. EM-61 Checking rod alignment

2. Check connecting rod for bend or torsion using a connecting rod aligner. If bend or torsion exceeds the limit, correct or replace.
3. When replacing connecting rod, select rod so that weight difference between new and old ones is within 7 gr (0.247 oz).
4. Install connecting rods with bearings on to corresponding crank pins and measure thrust clearance. If measured value exceeds the limit, replace.

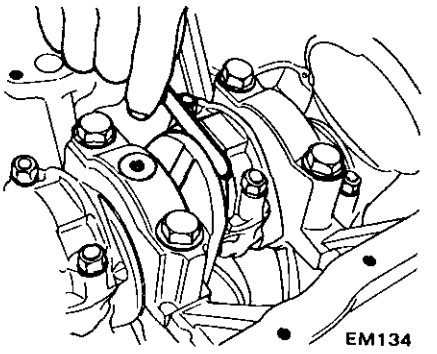

Fig. EM-62 Checking big end play

CRANKSHAFT

1. Whenever crankshaft is removed from engine, it should be cleaned thoroughly in a suitable solvent. After cleaning, check crankshaft journal and crank pin for score, bias wear or cracks. Repair or replace as required. If damage is minor, dress with fine crocus cloth.
2. Check journals and crank pins for taper and out-of-round with a micrometer. Measurement should be taken along journals for taper and around journals for out-of-round. See Figure EM-63 for detailed information.

Out-of-round X–Y
Taper A–B

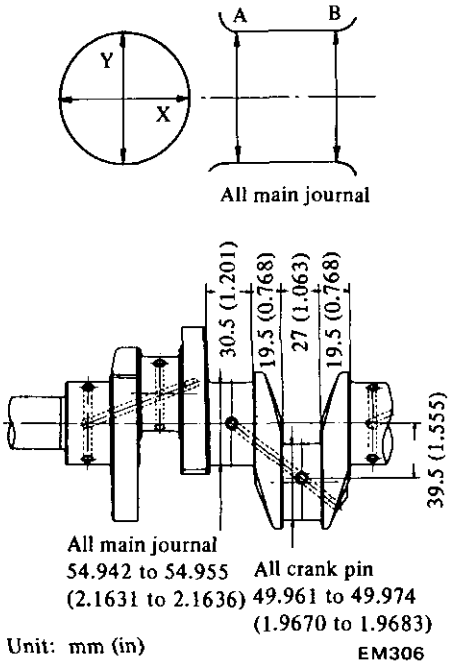

Fig. EM-63 Crankshaft and journal dimensions

If journals or crank pins are tapered or out-of-round beyond limits, replace with a new shaft.
3. Crankshaft bend can be checked by placing it on V-blocks and using a dial gauge with its indicating finger resting on center journal.

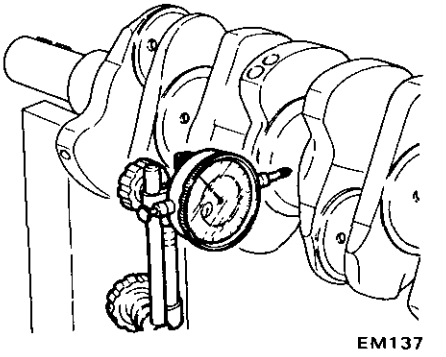

Fig. EM-64 Checking crankshaft bend

L28	Standard	Maximum
Taper and out-of-round of journal and crank pin mm (in)	less than 0.01 (0.0004)	0.03 (0.0012)

L28	Standard	Maximum
Crankshaft bend mm (in)	less than 0.05 (0.0020)	0.10 (0.0039)

Note: When measuring bend, use a dial gauge. Bend value is half of the reading obtained when crankshaft is turned one full revolution with a dial gauge attached to its center journal.

4. After regrinding crankshaft, finish it to the necessary size indicated on pages EM-18 and 19 by using an adequate undersize bearing according to the extent of required repair.
5. Install crankshaft in cylinder block and measure crankshaft free end play.

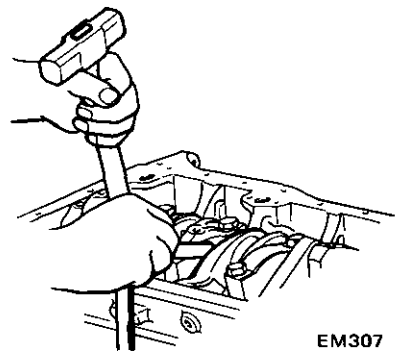

Fig. EM-65 Checking crankshaft end play

L28	Standard	Wear limit
Crankshaft free end play mm (in)	0.05 to 0.18 (0.0020 to 0.0071)	0.3 (0.0118)

6. At the rear end of crankshaft, check crankshaft pilot bushing for wear or damage. Replace it if damage is detected.

To replace crankshaft rear pilot bushing proceed as follows:

(1) Pull out bushing using Pilot Bushing Puller ST16610001.

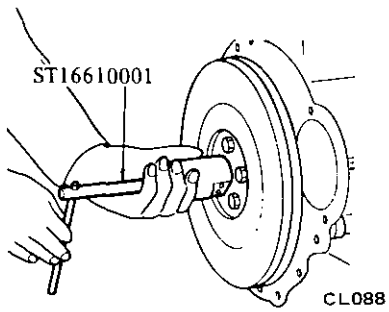

Fig. EM-66 Pulling out pilot bushing

(2) Before installing a new bushing, thoroughly clean bushing hole. Press fit bushing so its height above flange end is 6.5 to 7.0 mm (0.256 to 0.276 in). Do not oil bushing.

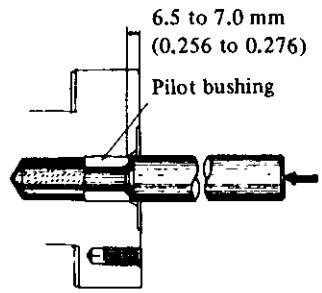

Fig. EM-67 Press-fitting new pilot bushing

BUSHING AND BEARING

MEASUREMENT OF MAIN BEARING CLEARANCE

1. Thoroughly clean all bearings, check for scratches, melting, score or wear.

Replace bearings if any damage is detected.

2. Crankshaft journals and bearings should be clean and free from dust and dirt before oil clearance is measured.

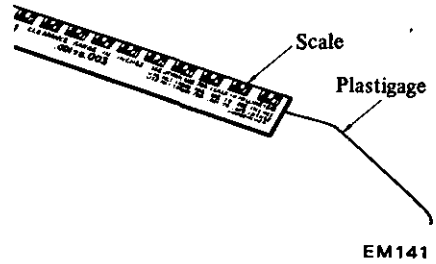

Fig. EM-68 Plastigage

3. Set main bearing on cap block.
4. Cut a plastigage to width of bearing and place it in parallel with crank pin, getting clear of the oil hole. Install cap on the assembly and tighten them together to the specified torque.

Tightening torque:
4.5 to 5.5 kg-m (33 to 40 ft-lb)

Note: Do not turn crankshaft while plastigage is being inserted.

5. Remove cap, and compare width of the plastigage at its widest part with the scale printed in plastigage envelope.

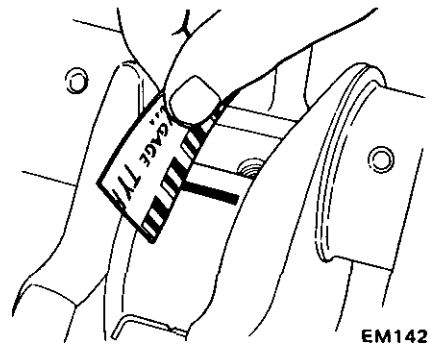

Fig. EM-69 Measuring bearing clearance

MEASUREMENT OF CONNECTING ROD BEARING CLEARANCE

1. Measure connecting rod bearing clearance in the same manner as above.

Tightening torque:
4.5 to 5.5 kg-m
(33 to 40 ft-lb)

Bearing oil clearance

L28	Standard	Wear limit
Main bearing clearance mm (in)	0.020 to 0.072 (0.0008 to 0.0028)	0.12 (0.0047)
Connecting rod bearing clearance mm (in)	0.025 to 0.055 (0.0010 to 0.0022)	0.12 (0.0047)

2. If clearance exceeds specified valve, replace bearing with an undersize bearing and grind crankshaft journal adequately.

FITTING BEARINGS

Bearings are manufactured with crush to make bearing snug down into its bore. To measure this, proceed as follows:

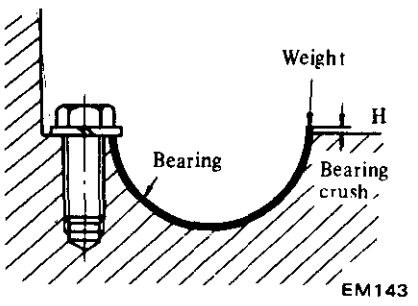

Fig. EM-70 Checking bearing crush

1. Set main bearing in main bearing cap recess or cylinder block bearing recess correctly.
2. Lock one side end of bearing and press other side until bearing back surface touches the recess.
3. Then, measure bearing crush "H" with a feeler gauge. See Figure EM-70. The standard bearing crush value is listed below.
4. Handle connecting rod bearing in the same manner as above.

Bearing crush

	L28
All main bearing mm (in)	0 to 0.03 (0 to 0.0012)
All connecting rod bearing mm (in)	0.015 to 0.045 (0.0006 to 0.0018)

Main bearing undersize

Unit: mm (in)

L28	Bearing top thickness	Crank journal diameter
STD	1.822 to 1.835 (0.0717 to 0.0722)	54.942 to 54.955 (2.1631 to 2.1636)
0.25 (0.0098) Undersize	1.947 to 1.960 (0.0767 to 0.0772)	54.692 to 54.705 (2.1532 to 2.1537)
0.50 (0.0197) Undersize	2.072 to 2.085 (0.0816 to 0.0821)	54.442 to 54.455 (2.1434 to 2.1439)
0.75 (0.0295) Undersize	2.197 to 2.210 (0.0865 to 0.0870)	54.192 to 54.205 (2.1335 to 2.1341)
1.00 (0.0394) Undersize	2.322 to 2.335 (0.0914 to 0.0919)	53.942 to 53.955 (2.1237 to 2.1242)

Connecting rod bearing undersize

Unit: mm (in)

L28	Bearing top thickness	Crank pin diameter
STD	1.493 to 1.506 (0.0588 to 0.0593)	49.961 to 49.974 (1.9670 to 1.9675)
0.06 (0.0024) Undersize	1.523 to 1.536 (0.0600 to 0.0605)	49.901 to 49.914 (1.9646 to 1.9651)
0.12 (0.0047) Undersize	1.553 to 1.566 (0.0611 to 0.0617)	49.841 to 49.854 (1.9622 to 1.9628)
0.25 (0.0098) Undersize	1.618 to 1.631 (0.0637 to 0.0642)	49.711 to 49.724 (1.9571 to 1.9576)
0.50 (0.0197) Undersize	1.743 to 1.756 (0.0686 to 0.0691)	49.461 to 49.474 (1.9473 to 1.9478)
0.75 (0.0295) Unsersize	1.868 to 1.881 (0.0735 to 0.0741)	49.211 to 49.224 (1.9374 to 1.9379)
1.00 (0.0394) Undersize	1.993 to 2.006 (0.0785 to 0.0790)	48.961 to 48.974 (1.9276 to 1.9281)

MISCELLANEOUS COMPONENTS

CRANKSHAFT SPROCKET, CAMSHAFT SPROCKET

1. Check tooth surface for flaws or wear. Replace sprocket if damage is found.
2. Install camshaft sprocket in position and check for runout. If it exceeds 0.1 mm (0.004 in) total indicator reading, replace camshaft sprocket. Also check for end play.

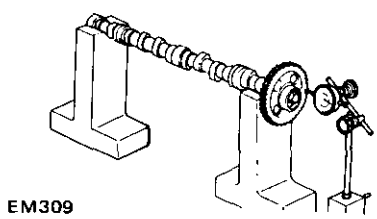

Fig. EM-71 Checking camshaft sprocket runout

Camshaft end play:
0.08 to 0.38 mm
(0.0031 to 0.0150 in)

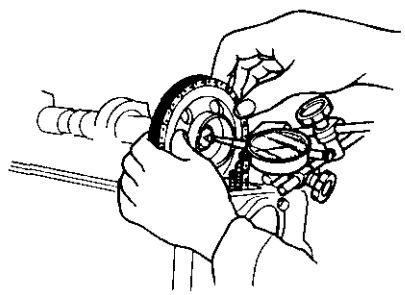

Fig. EM-72 Checking camshaft end play

3. Check chain for damage, excessive wear or stretch at roller links. Replace if faulty.
4. When chain stretches excessively, the valve timing goes out of order. Two location (camshaft set) holes are provided in camshaft sprocket to correct valve timing.

Adjust camshaft sprocket location. If the stretch of chain roller links is excessive, adjust camshaft sprocket location by transferring the camshaft set position of camshaft sprocket to No. 2 or No. 3 holes.

(1) Turn engine until No. 1 piston is at T.D.C. on its compression stroke. Determine whether camshaft sprocket location notch comes off the left end of the oblong groove on camshaft locator plate. (If the location notch is off the left end of the oblong groove, chain stretch is beyond limits.)

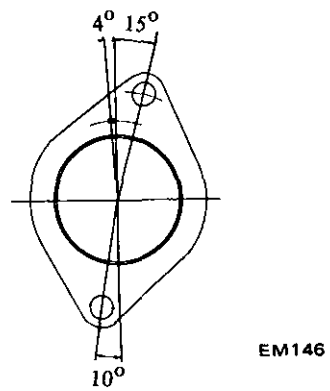

Fig. EM-73 Camshaft locate plate

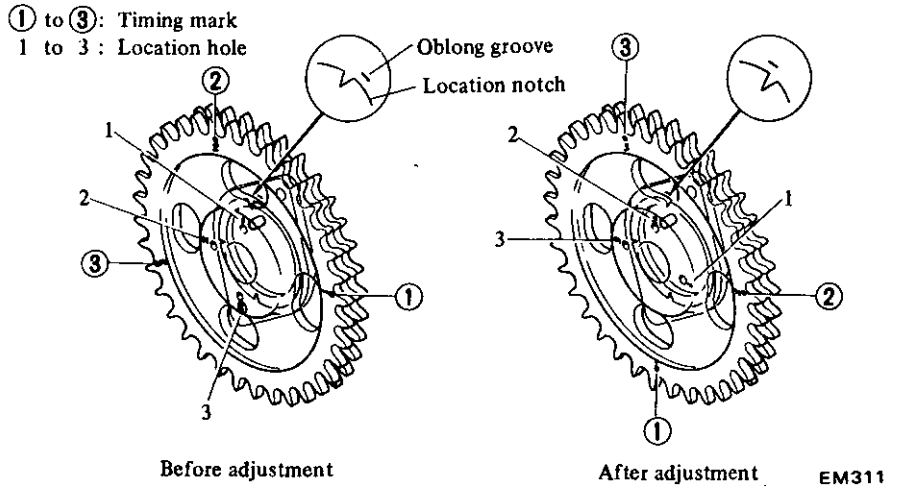

Fig. EM-74 Adjusting camshaft sprocket location

(2) Turn engine until No. 1 piston is at T.D.C. on its compression stroke, setting camshaft on No. 2 location hole in camshaft sprocket. This No. 2 notch should then be on the right end of the oblong groove. When No. 2 hole is used, No. 2 timing mark must also be used. The amount of the modification is a 4° rotation of crankshaft.

(3) If the valve timing cannot be corrected by using No. 2 hole, use No. 3 hole in the same procedure as above. The amount of modification by using No. 3 hole is an 8° rotation of crankshaft.

(4) When modification becomes impossible even by transferring camshaft location hole, replace chain assembly.

CHAIN TENSIONER AND CHAIN GUIDE

Check for wear and breakage. Replace if necessary.

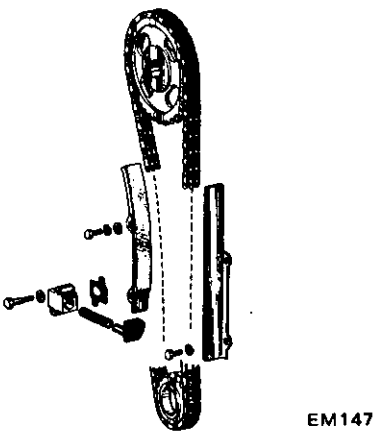

Fig. EM-75 Camshaft drive mechanism

FLYWHEEL

1. Check clutch disc contact surface with flywheel for damage or wear. Repair or replace if necessary.
2. Measure runout of clutch disc contact surface with a dial gauge. If it exceeds 0.15 mm (0.0059 in) total indicator reading, replace it.

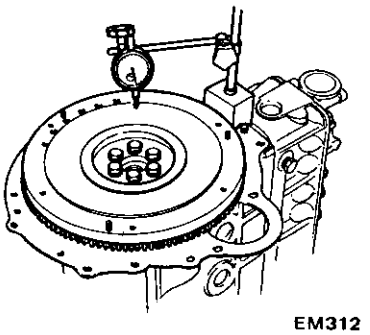

Fig. EM-76 Checking flywheel deviation

3. Check tooth surfaces of ring gear for flaws or wear.
   Replace if necessary.

Note: Replace ring gear at about 180 to 220°C (356 to 428°F).

FRONT COVER AND REAR OIL SEAL

First check front cover and rear oil seal for worn or folded over sealing lip or oil leakage. If necessary, install a new seal. When installing a new seal, pay attention to mounting direction.

Note: It is good practice to renew oil seal whenever engine is overhauled.

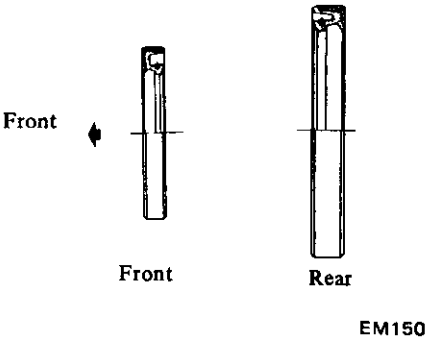

Fig. EM-77 Oil seal of crankshaft

ENGINE ASSEMBLY

CONTENTS

PRECAUTIONS EM-21
CYLINDER HEAD EM-21
PISTON AND CONNECTING ROD EM-22
ENGINE ASSEMBLY EM-22

PRECAUTIONS

1. Use thoroughly cleaned parts. Especially, make sure that oil holes are clear of foreign matter.
2. When installing sliding parts such as bearings, be sure to apply engine oil to them.
3. Use new packings and oil seals.
4. Do not reuse lock washers.
5. Keep tools and work benches clean.
6. Keep necessary parts and tools near at hand.
7. Be sure to follow specified tightenig torque and order.
8. Applying sealant

Use sealant to eliminate water and oil leaks. Parts requiring sealant are:

(1) Front cover and corners of cylinder block: See Figure EM-78.

(2) Main bearing cap and cylinder block: Each side of rear main bearing cap and each corner of cylinder block. See Figure EM-79.

(3) Cylinder block: Step portions at four mating surfaces (cylinder block to rear main bearing cap). See Figure EM-80.

Note: Do not apply too much sealant.

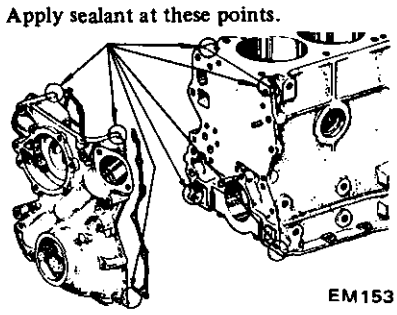

Fig. EM-78 Applying sealant (Front over and gasket)

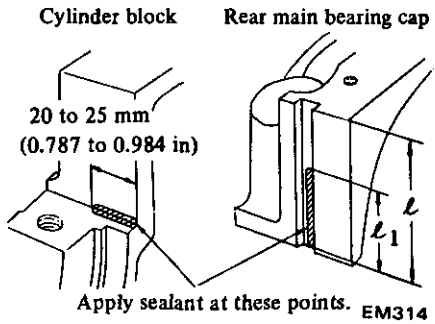

Fig. EM-79 Applying sealant (Main bearing cap and cylinder block)

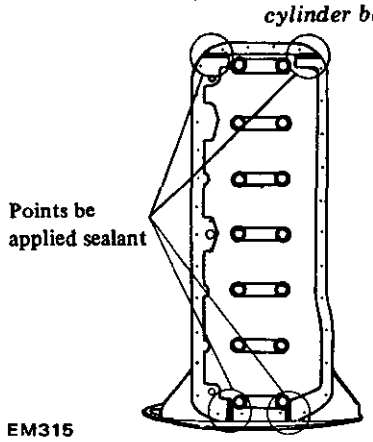

Fig. EM-80 Applying sealant (Cylinder block)

CYLINDER HEAD

1. Valve assembly and valve spring

Using Valve Lifter ST12070000, set valve spring seat in position, and fit valve guide with oil seal.

Assemble valve in the order: valve, inner and outer valve springs, spring retainer, valve collet and valve rocker guide.

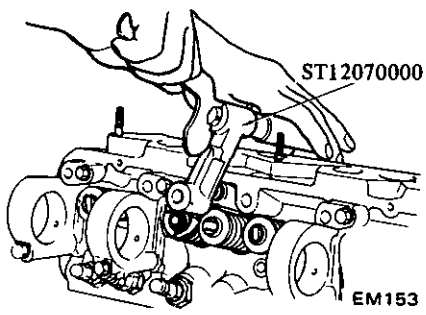

Fig. EM-81 Installing valve

Notes:

a. Ensure that valve face is free from foreign matter.

b. Outer valve spring is of an uneven pitch type. Install spring facing painted side to cylinder head surface.

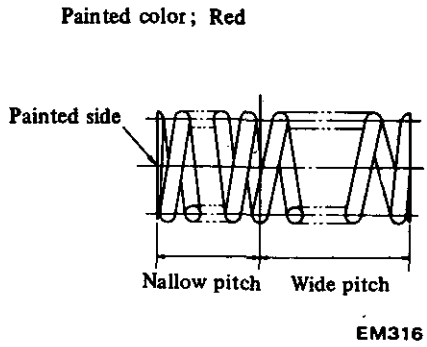

Fig. EM-82 Installing valve spring

2. Valve rocker pivot assembly

Screw valve rocker pivots joined with lock nuts into pivot bushing.

3. Camshaft assembly

Set locating plate and carefully install camshaft in cylinder head. Do not damage the bearing inside. Oblong groove of locating plate must be directed toward front side of engine.

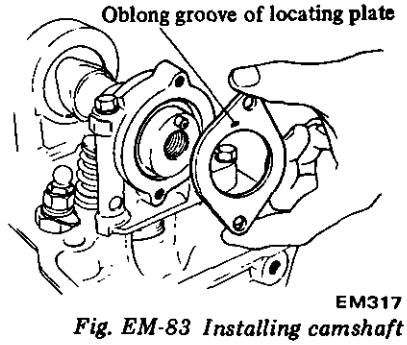

Fig. EM-83 Installing camshaft locating plate

4. Install camshaft sprocket on camshaft and tighten it to specified torque.

Tightening torque:
13 to 15 kg-m
(94 to 108 ft-lb)

At this time, check camshaft end play.

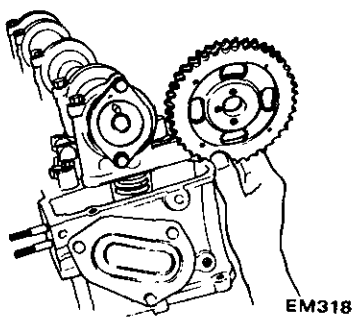

Fig. EM-84 Installing camshaft sprocket

5. Install rocker arms by pressing valve springs down with a screwdriver.

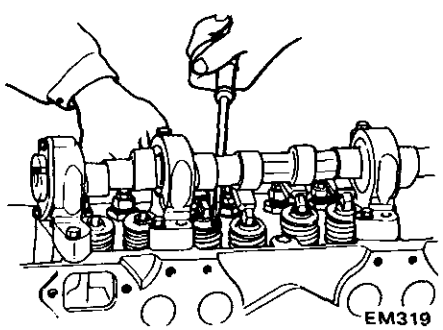

Fig. EM-85 Installing rocker arm

6. Install valve rocker springs.
7. After assembling cylinder head, turn camshaft until No. 1 piston is at T.D.C. on its compression stroke.

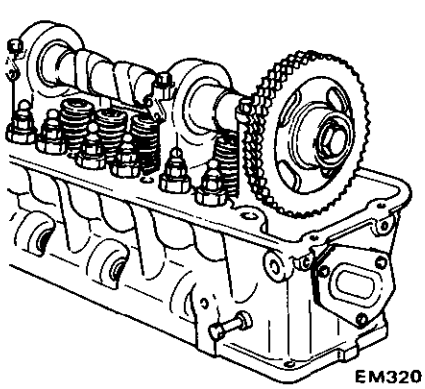

Fig. EM-86 Assembling cylinder head

PISTON AND CONNECTING ROD

1. Assemble pistons, piston pins and connecting rods on the designated cylinder.

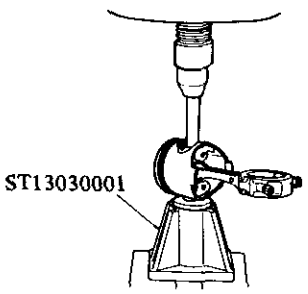

Fig. EM-87 Installing piston pin

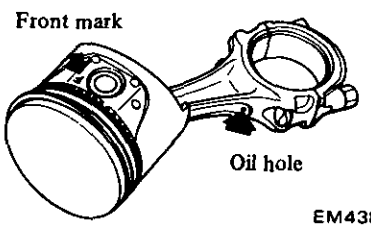

Fig. EM-88 Assembling piston and connecting rod

Notes:
a. **Piston is pressed into connecting rod with fitting force of from 0.5 to 1.5 tons; aid of Pin Press Stand ST13030001 is necessary.**
When pressing piston pin into connecting rod, apply engine oil to pin and small end of connecting rod.
b. **Arrange so that oil jet of connecting rod big end is directed toward right side of cylinder block.**
c. **Be sure to install piston in cylinders with notch mark of piston head toward front of engine.**

2. Install piston rings
Install top and second rings in right position, with marked side up.

Notes:
a. **Top ring is chromium-plated on liner contacting face.**
b. **Second ring has larger taper surface than top ring.**
c. **In the combined oil ring, upper rail is same as lower one.**

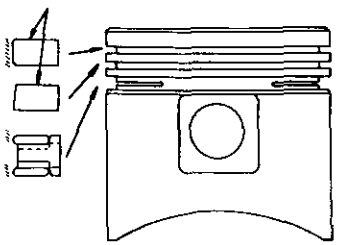

Fig. EM-89 Installing piston ring

3. Fix bearings on connecting rod and connecting rod cap.

Note: Clean back side of bearing carefully.

ENGINE ASSEMBLY

1. The first step in engine assembly is to bolt Engine Attachment ST05340000 to right hand side of cylinder block. Next, install block on Engine Stand ST0501S000 with engine bottom up.
2. Set main bearings at the proper portion of cylinder block.

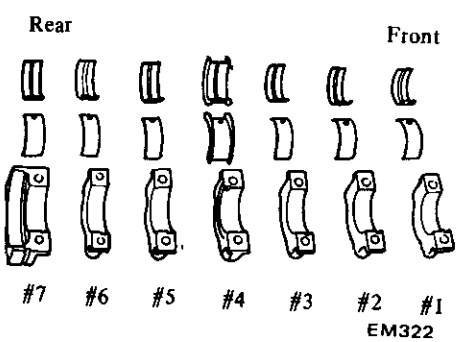

Fig. EM-90 Main bearings

3. Install baffle plate including cylinder block net.

Notes:
a. **Only center bearing (No. 4) is a flanged type.**
b. **All inter-bearings are the same type.**
c. **Front bearing (No. 1) is also the same type as rear bearing (No. 7).**
d. **All upper and lower bearings are not interchangeable.**

4. Apply engine oil to main bearing surfaces on both sides of cylinder block and cap.
Install crankshaft.

5. Install main bearing cap and tighten bolts to specified torque.

Tightening torque:
4.5 to 5.5 kg-m
(33 to 40 ft-lb)

Notes:

a. **Apply sealant to each side of rear main bearing cap and each corner of cylinder block as shown in Figure EM-79.**
b. **Arrange parts so arrow mark on bearing cap faces toward front of engine.**
c. **Prior to tightening bearing cap bolts, place bearing cap in proper position by shifting crankshaft in the axial direction.**
d. **Tighten bearing cap bolts gradually in two to three stages outwardly from center bearing in the sequence as shown in Figure EM-91.**
e. **After securing bearing cap bolts, ascertain that crankshaft turns smoothly.**

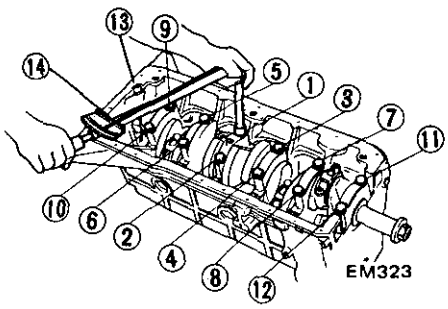

Fig. EM-91 Torque sequence of cap bolts

6. Make sure crankshaft has proper end play.

Crankshaft end play:
0.05 to 0.18 mm
(0.0020 to 0.0071 in)

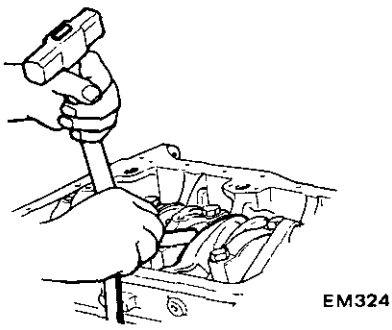

Fig. EM-92 Checking crankshaft end play

7. Install side oil seals in rear main bearing cap. Prior to installing, apply sealant to seals.

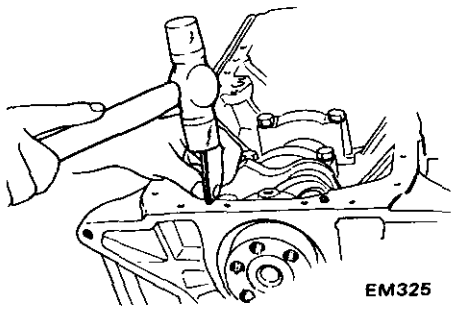

Fig. EM-93 Driving side oil seal

8. Install rear oil seal using Crankshaft Rear Oil Seal Drift ST15310000. Apply lithium grease to sealing lip of oil seal.

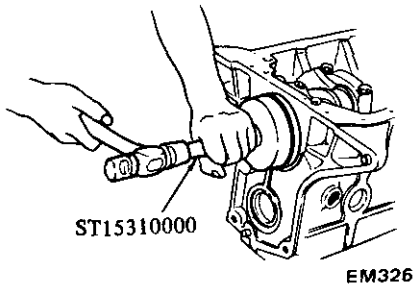

Fig. EM-94 Installing rear oil seal

9. Install rear end plate.
10. Install flywheel securely, and tighten bolts to specified torque.

Tightening torque:
13 to 15 kg-m (94 to 108 ft-lb)

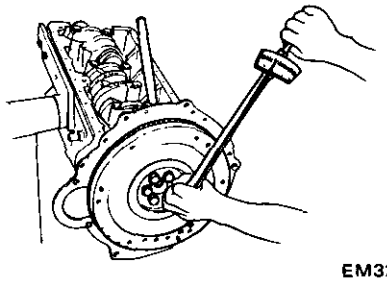

Fig. EM-95 Installing flywheel

11. Insert pistons in corresponding cylinder using Piston Ring Compressor EM03470000.

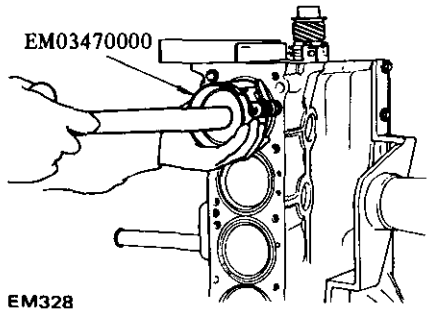

Fig. EM-96 Installing piston-rod assembly

Notes:

a. **Apply engine oil to sliding parts.**
b. **Arrange so that notch mark on piston head faces to front of engine.**
c. **Install piston rings at 180° to each other, avoiding their fit in the thrust and piston pin directions.**

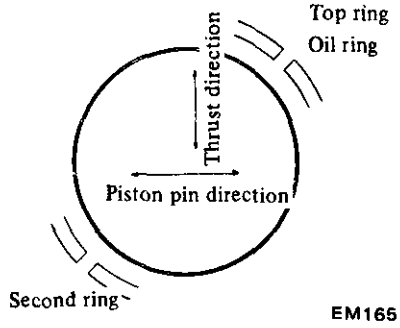

Fig. EM-97 Piston ring direction

12. Install connecting rod caps.

Tightening torque:
4.5 to 5.5 kg-m (33 to 40 ft-lb)

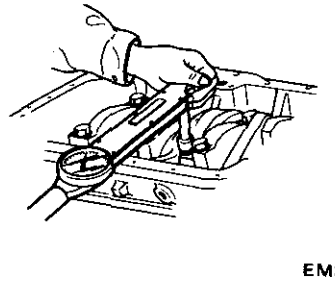

Fig. EM-98 Installing connecting rod cap

Note: **Arrange connecting rods and connecting rod caps so that the cylinder numbers face in the same direction.**

13. Make sure that connecting rod big end has proper end play.

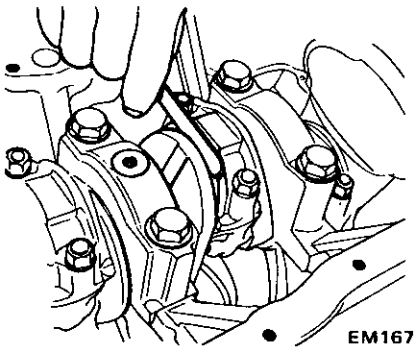

Fig. EM-99 Checking big end play

Big end play:
0.2 to 0.3 mm
(0.008 to 0.012 in)

14. Install cylinder head assembly.

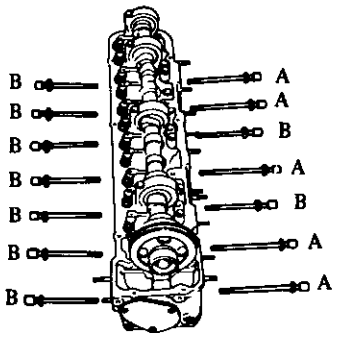

Fig. EM-100 Cylinder head bolts

(1) Thoroughly clean cylinder block and head surface.

Do not apply sealant to any other part of cylinder block and head surface.

(2) Turn crankshaft until No. 1 piston is at T.D.C. on its compression stroke.

(3) Make sure that camshaft sprocket location notch and plate oblong groove are aligned at their correct positions.

(4) When installing cylinder head, make sure that all valves are apart from head of pistons.

(5) Do not rotate crankshaft and camshaft separately, or valves will hit head of pistons.

(6) Temporarily tighten two bolts ①, ② shown in Figure EM-106.

Tightening torque:
2 kg-m (14 ft-lb)

15. Install crankshaft sprocket and distributor drive gear and fit oil thrower.

Note: Make sure that mating marks of crankshaft sprocket face to front.

16. Install timing chain.

Notes:

a. **Make sure that crankshaft and camshaft keys point upwards.**

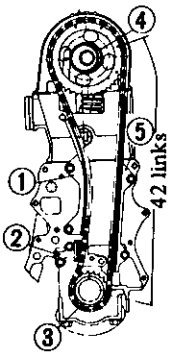

1 Chain guide
2 Chain tensioner
3 Crank sprocket
4 Cam sprocket
5 Chain guide

Fig. EM-101 Installing timing chain

b. **Set timing chain by aligning its mating marks with those of crankshaft sprocket and camshaft sprocket the right hand side. There are forty-two chain links between two mating marks of timing chain.**

c. **No. 1 hole is factory adjusted. When chain stretches excessively, adjust camshaft sprocket at No. 2 or No. 3 hole.**

d. **Use a set of timing marks and location hole numbers.**

17. Install chain guide to cylinder block.

18. Install chain tensioner.

Note: Adjust protrusion of chain tensioner spindle to 0 mm (0 in).

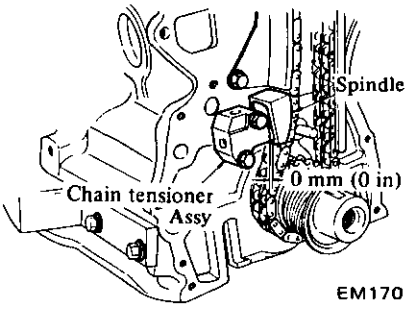

Fig. EM-102 Installing chain tensioner

19. Press new oil seal in front cover. (front cover oil seal should be replaced when front cover is disassembled).

20. Install front cover with gasket in place.

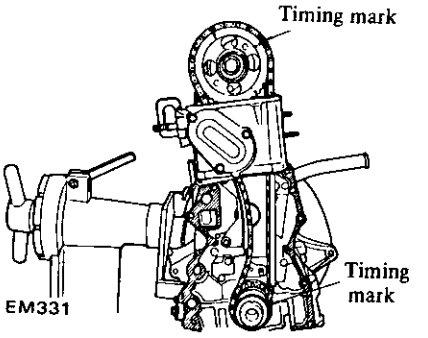

Fig. EM-103 Installing front cover

Notes:

a. **Apply sealant to front cover and corners of upper section of cylinder block as shown in Figure EM-74.**

b. **Install front cover with head gasket in place.**

c. **Check the height difference between cylinder block upper face and front cover upper face. Difference must be less than 0.15 mm (0.0059 in).**

d. **Note that different types of bolts are used.**

e. **Apply lithium grease to sealing lip of oil seal.**

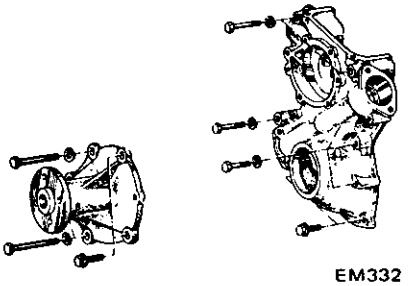

Fig. EM-104 Front cover bolts

Tightening torque:
Size M8 (0.315 in)
1.0 to 1.6 kg-m
(7.2 to 11.6 ft-lb)
Size M6 (0.236 in)
0.4 to 0.8 kg-m
(2.9 to 5.8 ft-lb)

21. Install crankshaft pulley and water pump, then set No. 1 piston at T.D.C. on its compression stroke.

Crankshaft pulley nut tightening torque:
12 to 16 kg-m
(87 to 116 ft-lb)

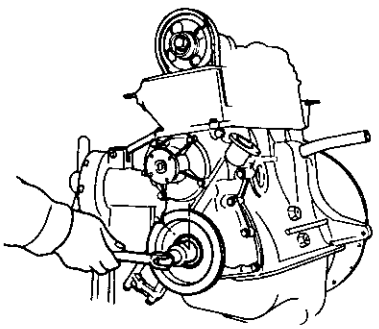

Fig. EM-105 Installing crankshaft pulley

22. Finally tighten head bolts to the specified torque in three steps according to the tightening sequence shown in Figure EM-106.

Note that two types of bolts are used.

Special tool Cylinder Head Bolt Wrench ST10120000

Tightening torque:
1st turn
4.0 kg-m (29 ft-lb)
2nd turn
6.0 kg-m (43 ft-lb)
3rd turn
7.5 to 8.5 kg-m
(54 to 61 ft-lb)

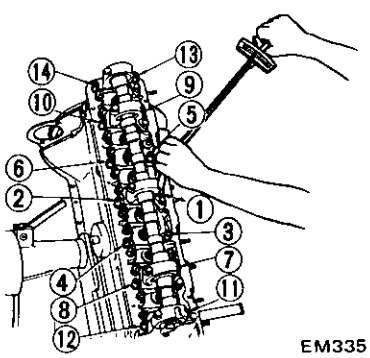

Fig. EM-106 Tightening sequence

Notes:
a. **Be sure to tighten two small bolts.**
b. **After engine has been operated for several minutes retighten if necessary.**

23. Install oil pump and distributor driving spindle in front cover.

Tightening torque:
1.1 to 1.5 kg-m
8.0 to 10.8 ft-lb)

Notes:
a. **Assemble oil pump and drive spindle, aligning driving spindle mark face with oil pump hole, and then move by one notch as shown in Figure EM-107.**
b. **Install oil pump together with drive spindle so that the projection on its top is located at the 11 : 25 a.m. position, at this point, the smaller bow-shape will be faced toward the front.**
c. **Do not forget to install gasket.**

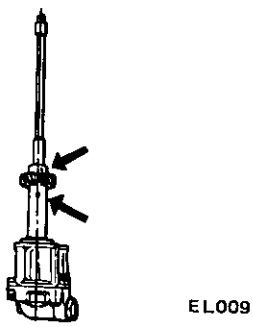

Fig. EM-107 Setting distributor driving spindle

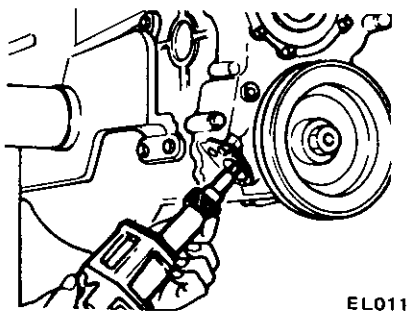

Fig. EM-108 Installing oil pump

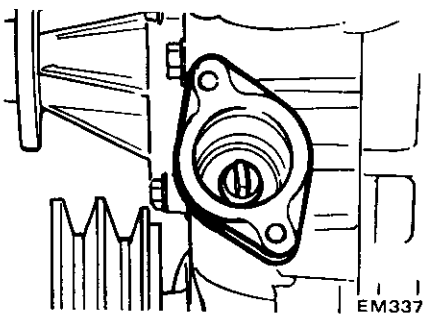

Fig. EM-109 Setting distributor drive spindle

24. Install fuel pump and water inlet elbow in their positions.

Fuel pump tightening torque:
1.2 to 1.8 kg-m
(8.7 to 13.0 ft-lb)

Note: Do not forget to install fuel pump spacer and packing between spacer and block, fuel pump.

25. Install oil strainer, oil pan gasket and oil pan.

Notes:
a. **Apply sealant to the step portions at four mating surfaces as shown in Figure EM-80.**
b. **Oil pan should tightened in criss-cross pattern to a final torque of 0.6 to 1.0 kg-m (4.3 to 7.2 ft-lb).**

26. Adjust valve clearance to the specified dimensions.

Special tool Pivot Adjuster ST10640001

Tightening torque:
5.0 to 6.0 kg-m
(36 to 43 ft-lb)

Notes:
a. **First set clearance to the cold specifications.**

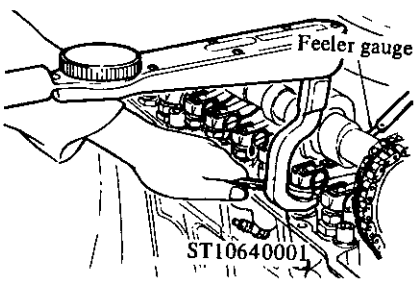

Fig. EM-110 Adjusting valve clearance

b. **After engine has been assembled, run it for at least several minutes, and finally adjust clearance to the warm specifications.**
For details, refer to "Adjusting intake and exhaust valve clearance" in ET section.

27. Install rocker cover.
28. Install rear engine slinger, exhaust manifold and intake manifold with heat shield plate, and E.G.R. tube.

Intake, exhaust manifold nut tightening torque:
Size 8M
1.4 to 1.8 kg-m
(10 to 13 ft-lb)
Size 10M
3.5 to 5.0 kg-m
(25 to 36 ft-lb)

There are two types of 10M bolts as shown in Figure EM-111. When installing, do not confuse them.

"L" dimensions; Long bolt (): 40 mm (1.575 in)
Short bolt (): 32 mm (1.260 in)

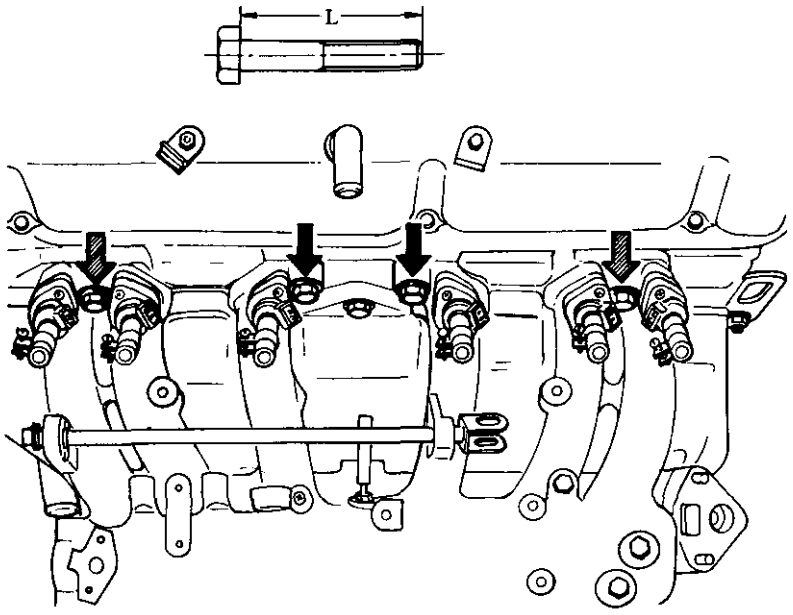

Fig. EM-111

			L28
Valve clearance mm (in)	Cold	Intake	0.20 (0.0079)
		Exhaust	0.25 (0.0098)
	Hot	Intake	0.25 (0.0098)
		Exhaust	0.30 (0.0118)

29. Install P.C.V. valve hose and sub heat shield plate.
30. Install thermostat housing, thermotime switch, temperature switch, water temperature switch and vacuum switching valve as an assembly.
31. Install water hose.
32. Install fuel return hose, fuel feed hose, vacuum signal hose, canister purge hose and front engine slinger.

Notes:

a. **Do not reuse hose clamps after removal. Always install new ones. Two types of hose clamp are used. One type is 13.5 mm (0.531 in) I.D. and the other is 15 mm (0.592 in). Do not confuse one with the other when installing.**

b. **Replace hoses which are deformed, scratched or chafed.**

Hose clamp tightening torque:
0.10 to 0.15 kg-m
(0.7 to 1.0 ft-lb)

33. Install throttle chamber together with dash pot and B.C.D.D.

Throttle chamber tightening torque:
1.4 to 1.8 kg-m
(10 to 13 ft-lb)

34. Install E.G.R. control valve, vacuum switching valve and hoses.
35. Install cold start valve and fuel pipe to cold start valve hose as an assembly.
36. Install air regulator, 3-way connector to rocker cover hose, throttle chamber to 3-way connector hose, air regulator to connector hose and 3-way connector to air regulator hose, as an assembly.
37. Install distributor.
38. Install spark plug.

Tightening torque:
1.5 to 2.0 kg-m
(11 to 14 ft-lb)

39. Connect distributor to high tension cables.

Note: All pipes and hoses should be clamped securely, being careful not to allow them to interfere with adjacent or surrounding parts.

40. Install the left engine mount bracket.

41. Install clutch assembly.

Special tool Clutch Aligning Bar ST20630000

Tightening torque:
1.2 to 2.2 kg-m
(8.7 to 15.9 ft-lb)

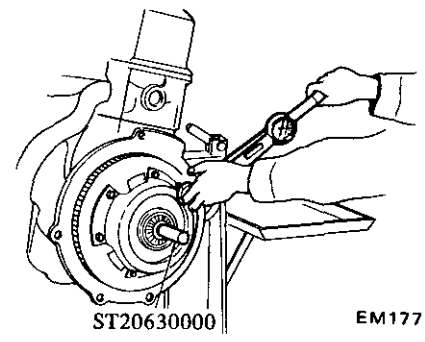

Fig. EM-112 Installing clutch assembly

42. Using an overhead hoist and lifting cable, hoist engine up away from engine stand and then down onto engine carrier.

Install air conditioner compressor bracket, idler pulley, compressor and compressor drive belt in that order.

Then, adjust air conditioner compressor belt tension by turning idler pulley bolt in or out. It is correct if deflection is 8 to 12 mm (0.315 to 0.472 in) thumb pressure [10 kg (22.0 lb)] is applied midway between idler pulley and air conditioner compressor pulley.

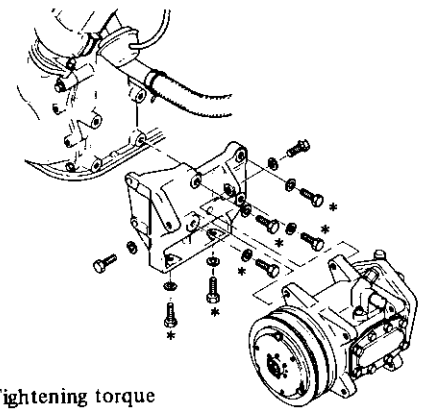

Tightening torque

* : 3.0 to 3.5 kg-m
(21.5 to 25.5 ft-lb)

EM575

Fig. EM-113 Installing compressor

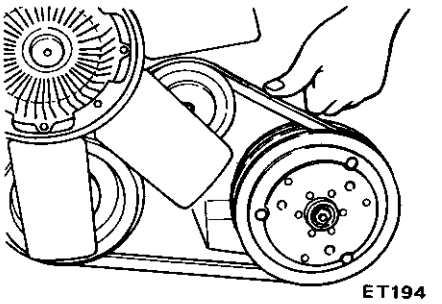

Fig. EM-114 Air conditioning compressor belt tension

43. Install alternator bracket, adjusting bar, alternator, fan pulley, fan and fan belt in that order. Then, check to be sure that deflection of fan belt is held within 8 to 12 mm (0.315 to 0.472 in) when thumb pressure is applied midway between pulleys [A pressed force is about 10 kg (22.0 lb).].

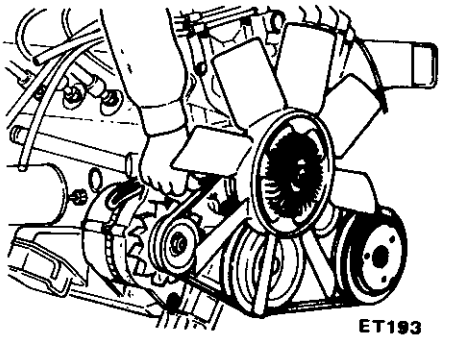

Fig. EM-115 Fan belt tension

44. Install engine mount bracket (right hand), oil filter, oil pressure switch, oil level gauge and water drain plug. When installing oil filter, fasten it to cylinder block by hand.

Note: Do not overtighten filter, or oil leakage may occur.

45. Fill engine oil up to specified level.

SERVICE DATA AND SPECIFICATIONS

GENERAL SPECIFICATION

Engine model		L28
Cylinder arrangement		6, in-line
Displacement	cc (cu in)	2,753 (168.0)
Bore x Stroke	mm (in)	86 x 79 (3.39 x 3.11)
Valve arrangement		O.H.C.
Firing order		1-5-3-6-2-4
Engine idle	rpm	
Manual transmission		800
Automatic transmission (in "D" range)		700
Compression ratio		8.3 : 1
Oil pressure (Warm at 2,000 rpm)	kg/cm² (psi)	3.5 to 4.0 (50 to 57)

TIGHTENING TORQUE

Model		L28
Cylinder head bolts	kg-m (ft-lb)	
1st turn		4.0 (29)
2nd turn		6.5 (47)
3rd turn		7.5 to 8.5 (54 to 61)
Connecting rod big end nuts	kg-m (ft-lb)	4.5 to 5.5 (33 to 40)
Flywheel fixing bolts	kg-m (ft-lb)	13 to 15 (94 to 108)
Main bearing cap bolts	kg-m (ft-lb)	4.5 to 5.5 (33 to 40)
Camshaft sprocket bolt	kg-m (ft-lb)	13 to 15 (94 to 108)
Oil pan bolts	kg-m (ft-lb)	0.6 to 1.0 (4.3 to 7.2)
Oil pump bolts	kg-m (ft-lb)	1.1 to 1.5 (8.0 to 10.8)
Oil pan drain plug	kg-m (ft-lb)	2.0 to 3.0 (14 to 22)
Rocker pivot lock nuts	kg-m (ft-lb)	5.0 to 6.0 (36 to 43)
Camshaft locating plate bolts	kg-m (ft-lb)	0.5 to 0.8 (3.6 to 5.8)
Manifold bolts or nuts	kg-m (ft-lb)	Size 8M 1.4 to 1.8 (10 to 13)
	kg-m (ft-lb)	Size 10M 3.5 to 5.0 (25 to 36)
Crank pulley bolts	kg-m (ft-lb)	13.0 to 15.0 (94 to 108)
Front cover bolts	kg-m (ft-lb)	
6M		0.4 to 0.8 (2.9 to 5.8)
8M		1.0 to 1.6 (7.2 to 11.6)
Oil strainer	kg-m (ft-lb)	0.4 to 0.6 (2.9 to 4.3)

SPECIFICATIONS

Model	L28
a) Valve mechanism	
Valve clearance (Hot) mm (in)	
Intake	0.25 (0.0098)
Exhaust	0.30 (0.0118)
Valve clearance (Cold) mm (in)	
Intake	0.20 (0.0079)
Exhaust	0.25 (0.0098)
Valve head diameter mm (in)	
Intake	44 (1.73)
Exhaust	35 (1.38)
Valve stem diameter mm (in)	
Intake	7.965 to 7.980 (0.3136 to 0.3142)
Exhaust	7.945 to 7.960 (0.3128 to 0.3134)
Valve length mm (in)	
Intake	114.9 to 115.2 (4.524 to 4.535)
Exhaust	115.7 to 116.0 (4.555 to 4.567)
Valve lift mm (in)	
Intake	11 (0.433)
Exhaust	11 (0.433)
Valve spring free length mm (in)	
Outer	49.98 (1.968)
Inner	44.85 (1.766)
Valve spring pressured length (valve open) mm/kg (in/lb)	
Intake Outer	29.5/49.0 (1.161/108.0)
Intake Inner	24.5/25.5 (0.965/56.2)
Exhaust Outer	29.5/49.0 (1.161/108.0)
Exhaust Inner	24.5/25.5 (0.965/56.2)
Valve spring assembled height (valve close) mm/kg (in/lb)	
Outer	40.0/21.3 (1.575/47.0)
Inner	35/12.3 (1.378/27.1)
Valve guide length mm (in)	
Intake	59.0 (2.323)
Exhaust	59.0 (2.323)

Valve guide height from head surface	mm (in)	10.4 to 10.6 (0.409 to 0.417)
Valve guide inner diameter	mm (in)	
Intake		8.000 to 8.018 (0.3150 to 0.3157)
Exhaust		8.000 to 8.018 (0.3150 to 0.3157)
Valve guide outer diameter (standard)	mm (in)	
Intake		12.023 to 12.034 (0.4733 to 0.4738)
Exhaust		12.023 to 12.034 (0.4733 to 0.4738)
Valve guide to stem clearance	mm (in)	
Intake		0.020 to 0.053 (0.0008 to 0.0021)
Exhaust		0.040 to 0.073 (0.0016 to 0.0029)
Valve seat width	mm (in)	
Intake		1.4 to 1.6 (0.055 to 0.063)
Exhaust		1.8 to 2.2 (0.071 to 0.087)
Valve seat angle		
Intake		45°
Exhaust		45°
Valve seat interference fit	mm (in)	
Intake		0.081 to 0.113 (0.0032 to 0.0044)
Exhaust		0.064 to 0.096 (0.0025 to 0.0038)
Valve guide interference fit	mm (in)	0.027 to 0.049 (0.0011 to 0.0019)

b) Camshaft and timing chain

Camshaft end play	mm (in)	0.08 to 0.38 (0.0031 to 0.0150)
Camshaft lobe lift	mm (in)	
Intake		7.00 (0.2756)
Exhaust		7.00 (0.2756)
Camshaft journal diameter	mm (in)	
1st		47.949 to 47.962 (1.8878 to 1.8883)
2nd		47.949 to 47.962 (1.8878 to 1.8883)
3rd		47.949 to 47.962 (1.8878 to 1.8883)
4th		47.949 to 47.962 (1.8878 to 1.8883)
5th		47.949 to 47.962 (1.8878 to 1.8883)
Camshaft bend	mm (in)	0.02 (0.0008)
Camshaft journal to bearing clearance	mm (in)	0.038 to 0.067 (0.0015 to 0.0026)
Camshaft bearing inner diameter	mm (in)	
1st		48.000 to 48.016 (1.8898 to 1.8904)
2nd		48.000 to 48.016 (1.8898 to 1.8904)
3rd		48.000 to 48.016 (1.8898 to 1.8904)
4th		48.000 to 48.016 (1.8898 to 1.8904)

c) Connecting rod

Center distance	mm (in)	130.35 (5.1319)
Bearing thickness (S.T.D.)	mm (in)	1.493 to 1.506 (0.0588 to 0.0593)
Big end play	mm (in)	0.20 to 0.30 (0.0079 to 0.0118)
Connecting rod bearing clearance	mm (in)	0.025 to 0.055 (0.0010 to 0.0022)
Connecting rod bend or torsion (per 100 mm or 2.937 in)	mm (in)	less than 0.03 (0.0012)

d) Crankshaft and main bearing

Journal diameter	mm (in)	54.942 to 54.955 (2.1631 to 2.1636)
Journal taper & out-of-round	mm (in)	less than 0.01 (0.0004)
Crankshaft free end play	mm (in)	0.05 to 0.18 (0.0020 to 0.0071)
Wear limit of dittoed play	mm (in)	0.3 (0.0118)
Crank pin diameter	mm (in)	49.961 to 49.974 (1.9670 to 1.9675)
Crank pin taper & out-of round	mm (in)	less than 0.01 (0.0004)
Main bearing thickness (S.T.D.)		1.822 to 1.835 (0.0717 to 0.0722)
Main bearing clearance	mm (in)	0.020 to 0.072 (0.0008 to 0.0028)
Wear limit of dittoed clearance	mm (in)	0.12 (0.0047)
Crankshaft bend	mm (in)	0.05 (0.0020)

e) Piston

Piston diameter (S.T.D.)	mm (in)	85.985 to 86.035 (3.3852 to 3.3872)
0.50 (0.0197) Oversize	mm (in)	86.465 to 86.515 (3.4041 to 3.4061)
1.00 (0.0394) Oversize	mm (in)	86.965 to 87.015 (3.4238 to 3.4258)
Ellipse difference	mm (in)	0.32 to 0.35 (0.0126 to 0.0138)
Ring groove width	mm (in)	
Top		2.0 (0.079)
Second		2.0 (0.079)
Oil		4.0 (0.157)
Piston to bore clearance	mm (in)	0.025 to 0.045 (0.0010 to 0.0018)
Piston pin hole off-set	mm (in)	0.95 to 1.05 (0.0374 to 0.0413)
Piston pin hole diameter	mm (in)	21.001 to 21.008 (0.8268 to 0.8271)

f) Piston pin

Pin diameter	mm (in)	20.993 to 20.998 (0.8265 to 0.8267)
Pin length	mm (in)	72.00 to 72.25 (2.8346 to 2.8445)
Piston pin to piston clearance	mm (in)	0.006 to 0.013 (0.0002 to 0.0005)
Interference fit of piston pin to connecting rod bushing	mm (in)	0.015 to 0.033 (0.0006 to 0.0013)

g) Piston ring

Ring height	mm (in)	
Top		1.977 (0.0778)
Second		1.977 (0.0778)
Side clearance	mm (in)	
Top		0.045 to 0.080 (0.0018 to 0.0031)
Second		0.030 to 0.070 (0.0012 to 0.0028)
Ring gap	mm (in)	
Top		0.23 to 0.38 (0.0091 to 0.0150)
Second		0.15 to 0.30 (0.0059 to 0.0118)
Oil		0.15 to 0.30 (0.0059 to 0.0118)

h) Cylinder block

Bore		
Inner diameter	mm (in)	86.000 to 86.050 (3.3858 to 3.3878)
Wear limit	mm (in)	0.20 (0.0079)
Out-of-round	mm (in)	0.015 (0.0006)
Taper	mm (in)	0.015 (0.0006)
Difference between cylinders	mm (in)	0.05 (0.0020)
Surface flatness	mm (in)	less than 0.05 (0.0020)

i) Cylinder head

Flatness	mm (in)	less than 0.05 (0.0020)

TROUBLE DIAGNOSES AND CORRECTIONS

Condition	Probable cause	Corrective action
I. Noisy engine		
Knocking of crankshaft and bearing.	Loose main bearing.	Replace.
	Seized bearing.	Replace.
	Bent crankshaft.	Repair or replace.
	Uneven wear of journal.	Correct.
	Excessive crankshaft end play.	Replace center bearing.
Piston and connecting rod knocking.	Loose bearing.	Replace.
	Seized bearing.	Replace.
	Loose piston pin.	Replace pin or bushing.
	Loose piston in cylinder.	Recondition cylinder.
	Broken piston ring.	Replace.
	Improper connecting rod alignment.	Realign.
Camshaft knocking.	Loose bearing.	Replace.
	Excessive axial play.	Replace bearing thrust plate.
	Rough gear teeth.	Repair.
	Broken cam gear.	Replace.
Timing chain noise.	Improper chain tension.	Adjust.
	Worn and/or damaged chain.	Replace.
	Worn sprocket.	Replace.
	Worn and/or broken tension adjusting mechanism.	Replace.
	Excessive camshaft and bearing clearance.	Replace.
Camshaft and valve mechanism knocking.	Improper valve clearance.	Adjust.
	Worn adjusting screw.	Replace.
	Worn rocker face.	Replace.
	Loose valve stem in guide.	Replace guide.
	Weakened valve spring.	Replace.
	Seized valve.	Repair or replace.
Water pump knocking.	Improper shaft end play.	Replace.
	Broken impeller.	Replace.
II. Othermechanical troubles		
Stuck valve.	Improper valve clearance.	Adjust.
	Insufficient clearance between valve stem and guide.	Clean stem or ream guide.
	Weakned or broken valve spring.	Replace.
	Seized or damage of valve stem.	Replace or clean.
	Poor quality fuel.	Use good fuel.

Condition	Probable cause	Corrective action
Seized valve seat.	Improper valve clearnce.	Adjust.
	Weakned valve spring.	Replace.
	Thin valve head edge.	Replace valve.
	Narrow valve seat.	Reface.
	Overheating.	Repair or replace.
	Over speeding.	Drive at proper speed.
	Stuck valve guide.	Repair.
Excessively worn cylinder and piston.	Shortage of engine oil.	Add or replace oil.
	Dirty engine oil.	Clean crankcase, replace oil and oil filter element.
	Poor quality of oil.	Use proper oil.
	Overheating	Repair or replace.
	Wrong assembly of piston with connecting rod.	Repair or replace.
	Improper piston ring clearance.	Adjust.
	Broken piston ring.	Replace.
	Dirty air cleaner.	Clean.
	Mixture too rich.	Adjust.
	Engine over run.	Drive at proper speeds.
	Stuck choke valve.	Clean and adjust.
	Overchoking.	Start correct way.
Faulty connecting rod.	Shortage of engine oil.	Add oil.
	Low oil pressure.	Correct.
	Poor quality engine oil.	Use proper oil.
	Rough surface of crankshaft.	Grind and replace bearing.
	Clogged oil passage.	Clean.
	Bearing worn or eccentric.	Replace.
	Bearing improperly assembled.	Correct.
	Loose bearing.	Replace.
	Incorrect connecting rod alignment.	Repair or replace.
Faulty crankshaft bearing.	Shortage of engine oil.	Add or replace.
	Low oil pressure.	Correct.
	Poor quality engine oil.	Use specified oil.
	Crankshaft journal worn or out-of-round.	Repair.
	Clogged oil passage in crankshaft.	Clean.
	Bearing worn or eccentric.	Replace.
	Bearing improperly assembled.	Correct.
	Eccentric crankshaft or bearing.	Replace.

SPECIAL SERVICE TOOLS

No.	Tool number & tool name	Description Unit: mm (in)	For use on	Reference page or figure No.
1.	ST19320000 Oil filter wrench	Used to take out oil filter. In tightening the filter, do not use this tool. To prevent excess tightening, always install by hand. 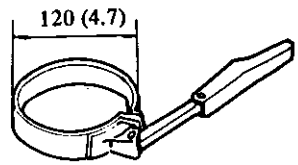 SE197	All models	Page EM-4
2.	ST05340000 Engine attachment	Attachment for setting the engine on the engine stand. 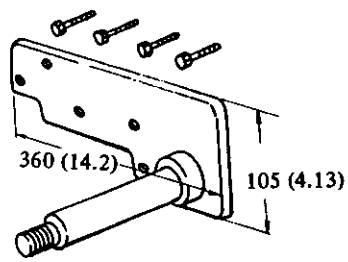 SE292	L20A L24 L26	Fig. EM-9 Page EM-22
3.	ST0501S000 Engine stand assembly - ST05011000 Engine stand - ST05012000 Base	Used for disassembling or assembling engine block or differential carrier throughout 360° in all directions. 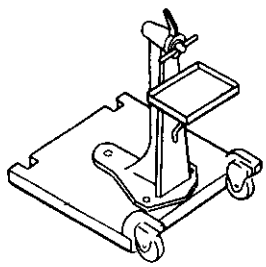 SE184	All models	Fig. EM-9 Page EM-22
4.	ST16540000 Puller crank pulley	For removing the crank pulley with damper. 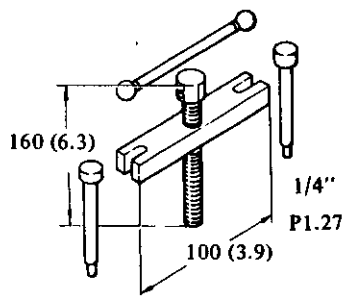 SE293	L20A L24 L26	Fig. EM-18

No.	Tool number & tool name	Description Unit: mm (in)	For use on	Reference page or figure No.
5.	ST17420001 Chain stopper	Used to prevent chains from falling out of place in removing cylinder heads or cam gears and shafts. 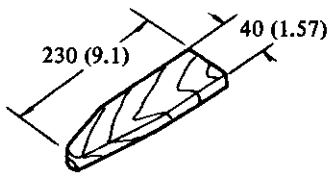 SE195	All L-series	Fig. EM-14 Page EM-5
6.	ST10120000 Cylinder head bolt wrench	Special hollow set bolts are used in tightening cylinder heads in L-series engines. This wrench is used to torque cylinder head bolts and its head can be inserted into the torque wrench. 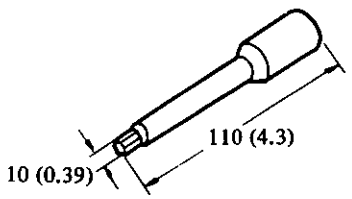 SE186	All L-series	Fig. EM-20 Fig. EM-106
7.	ST1651S000 Crankshaft main bearing cap puller ST16511000 Body ST16512001 Adapter	Used to remove the cap from main bearing. When using this tool, turn its adapter into the threaded hole in main bearing cap. 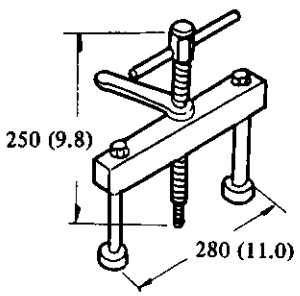 SE190	All L-series	Fig. EM-26
8.	ST13030001 Piston pin press stand	Used with a press to drive pin into, or out of, connecting rod. 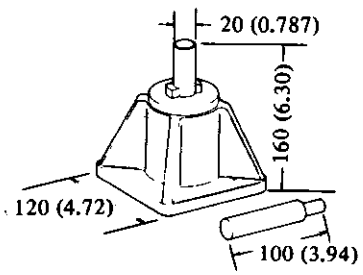 SE188	All L-series	Fig. EM-87

No.	Tool number & tool name	Description Unit: mm (in)	For use on	Reference page or figure No.
9.	ST12070000 Valve lifter	Used to compress valve spring by the combined action of its cam and lever, thereby facilitating the removal or installation of collect (for general use). 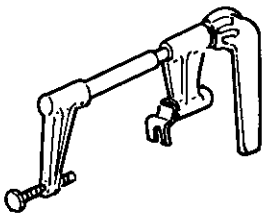 SE194	All models	Fig. EM-33 Fig. EM-81
10.	ST1103S000 Valve guide reamer set -ST11031000 Reamer (12.2 mm dia.) -ST11032000 Reamer (8.0 mm dia.) -ST11033000 Drift	This guide is used for: o Pressing used guide out of place. o Driving a new guide into place. o Finishing the bore of new guide. 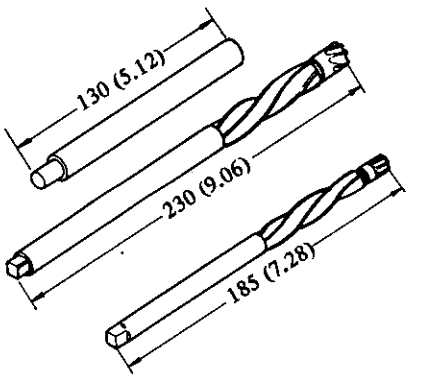 SE192	All L-series	Fig. EM-44
11.	ST11650001 Cutter set valve seat	For correcting the valve seat insert. 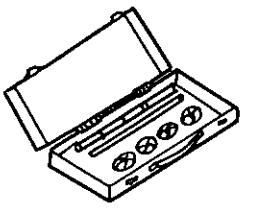 SE295	L24 L20A L16 L13	Fig. EM-45
12.	ST16610001 Pilot bush puller	Used to push pilot bush out of place. 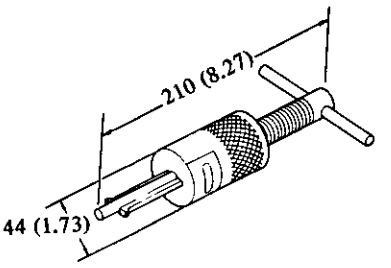 SE191	All L-Series	Fig. EM-66

No.	Tool number & tool name	Description Unit: mm (in)	For use on	Reference page or figure No.
13.	ST15310000 Crankshaft rear oil seal drift	Used to push a lip type rear oil seal for L-series engine into place by giving hammer blows. 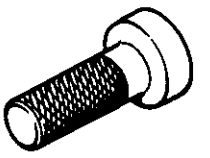 SE189	All L-series	Fig. EM-94
14.	EM03470000 Piston ring compressor	Used to compress piston rings while piston is being inserted into cylinder. 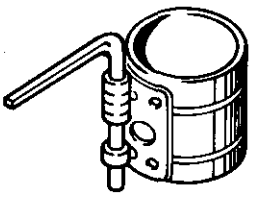 SE199	All models	Fig. EM-96
15.	ST10640001 Pivot adjuster	Used together with a torque wrench in tightening pivot lock nut for valve clearance adjustment. 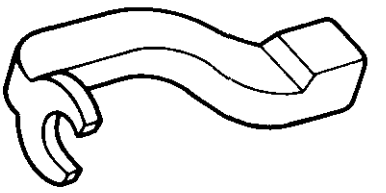 SE187	All L-series	Fig. EM-110
16.	ST20630000 Clutch aligning	For centering the clutch disc. 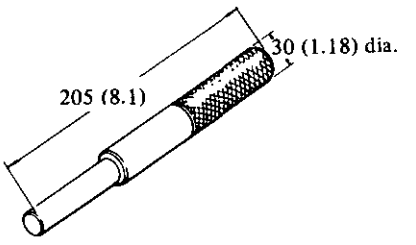 SE294	S30	Fig. EM-111