DATSUN 280Z
MODEL S30 SERIES

SECTION BE

BODY ELECTRICAL SYSTEM

FIND

BODY ELECTRICAL WIRING ..... BE- 2

LIGHTING AND SIGNAL LAMP SYSTEM ..... BE- 9

METERS AND GAUGES ..... BE- 31

ELECTRICAL ACCESSORY ..... BE- 48

EMISSION WARNING SYSTEM ..... BE- 96

BE

NISSAN

NISSAN MOTOR CO., LTD.
TOKYO, JAPAN

BODY ELECTRICAL WIRING

CONTENTS

DESCRIPTION BE-2
WIRING HARNESS BE-2
COLORS OF CABLES BE-2
WIRING BE-3
INSPECTION BE-4
MAINTENANCE BE-5
FUSE BLOCK AND FUSIBLE LINK BE-5
DESCRIPTION BE-5
MAINTENANCE INSTRUCTIONS BE-5
RELAY BRACKET BE-6

DESCRIPTION

Cables used for body electrical wiring are low tension cables. They are covered with color-coded vinyl for easy identification. Each system (e.g. ignition, lighting, or signal system) has its own distinctive color. This facilitates trouble-shooting. In the wiring diagram, the colors are indicated by one or two alphabetical letters.

The entire wiring system consists of several harnesses connected one to another by means of connectors; These include engine room harness, instrument harness, dash harness, body harness, console harness, engine harnesses No. 1 and No. 2, electronic fuel injection harness, electronic fuel injection sub harness and fuel tank harness.

It is recommended that the battery be disconnected before performing any electrical service other than bulb, or fuse replacement. To protect the electrical devices, fuses are installed in the middle of circuit.

In addition to fuses, some fusible links are installed to protect wiring. Fusible links function almost the same as fuses, though they are slightly different in their characteristics.

Refer to Section EE for engine harness and Section EF for electronic fuel injection harness.

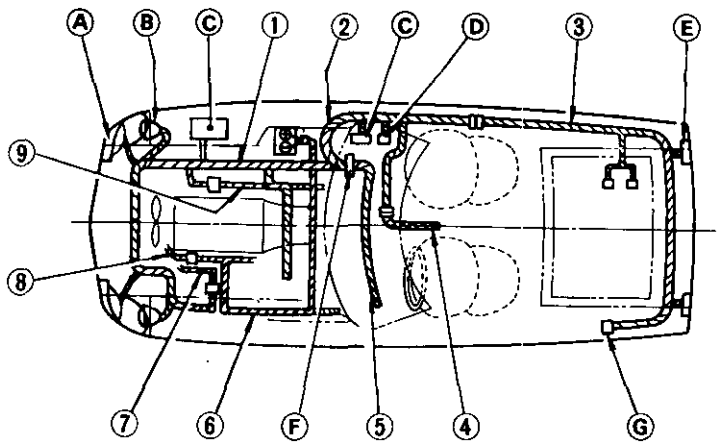

1 Engine room harness
2 Dash harness
3 Body harness
4 Instrument harness
5 Console harness
6 Engine harness No. 1
7 Engine harness No. 2
8 Electronic fuel injection harness
9 Electronic fuel injection sub-harness

BE968A

A Front combination lamp
B Headlamp
C Relay bracket
D Fuse block
E Rear combination lamp
F Junction block
G Speaker

Fig. BE-1 Wiring harness

WIRING HARNESS

COLORS OF CABLES

The system of colors used in the covering of cable conductors are as shown in the following table:

Circuit system	Standard color	Supplementary color	Supplementary color Standard color
Starting and ignition system	B (Black)	W, Y, R	
Charging system	W (White)	B, R, L	Y
Lighting system	R (Red)	W, B, G, Y, L	
Signal system	G (Green)	W, B, R, Y, L	W, Br (Brown)
Instrument system	Y (Yellow)	W, B, G, R, L	
Others	L (Blue) Lg (Light green)	W, R, Y	Y, Br Lg (Light green)
Grounding system	B (Black)		

The main cable of each system is generally coded with a standard or supplementary color. These colors are represented by such letters as G, W, and B. Minor items of each circuit's terminal are coded with a two-tone color composed of both standard and supplementary colors. These colors are represented by a combination of two letters like RW or GY. The first letter of each combination stands for standard color, and the second for supplementary color.

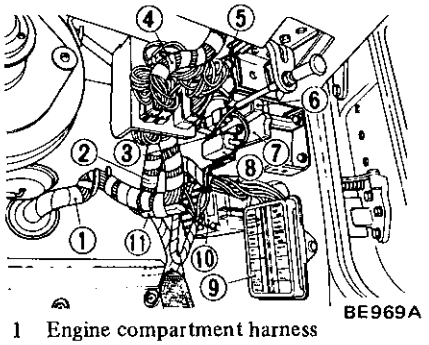

1 Engine compartment harness
2 Dash harness
3 Intermittent wiper amplifier
4 Instrument harness
5 Ignition relay
6 Horn relay
7 Relay bracket
8 Timer unit
9 Fuse block
10 Transistor ignition unit
11 Resistor for tachometer

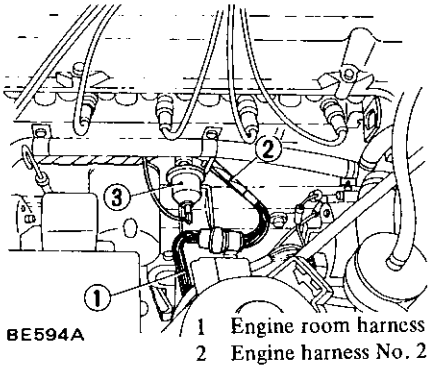

1 Engine room harness
2 Engine harness No. 2
3 Oil pressure sensor

WIRING

Engine room harness

Engine room harness is connected to instrument harness and dash harness with four connectors at junction block under the right side of instrument panel. It has two branches.

One branch runs along the right side of engine compartment, where it is connected to engine harness No. 2, traverses engine compartment under radiator and is connected to engine harness No. 1 on the left side of engine compartment.

The other branch runs along the rear end of engine compartment to inspection lamp.

Engine harness No. 1

This harness is connected to engine room harness on the left side of engine compartment, and services B.C.D.D. solenoid, magnet clutch (air conditioner equipped models), engine earth, vacuum switch solenoid (non-California models), water temperature sensor, water temperature switch and E.G.R. cut solenoid (California models).

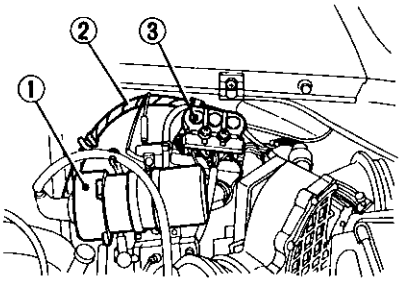

1 Ignition coil
2 Engine room harness
3 Terminal block

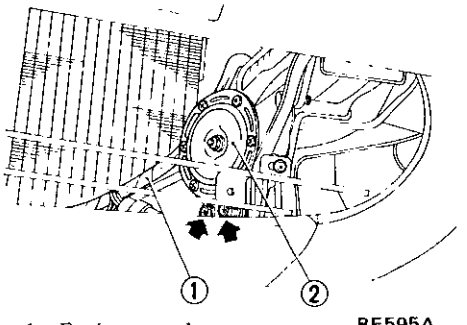

1 Engine room harness
2 Horn

Fig. BE-2 Engine room harness

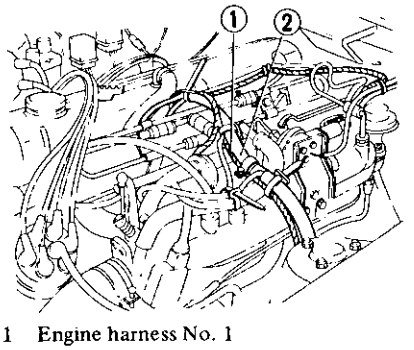

1 Engine harness No. 1
2 Electronic fuel injection harness

Fig. BE-3 Engine harness No. 1

Engine harness No. 2

This harness is connected to engine room harness on the right side of engine compartment.

On automatic transmission models, it services oil pressure switch, starter motor, kickdown solenoid and inhibitor switch.

On manual transmission models, it services oil pressure switch, starter motor, reverse lamp switch and top gear switch (non-California models).

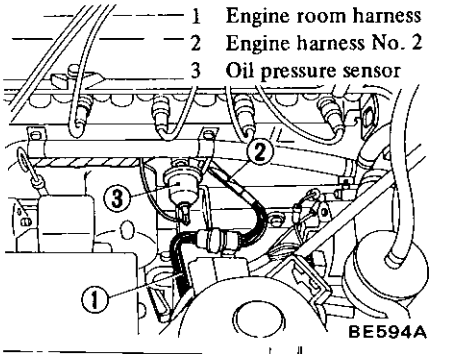

1 Engine room harness
2 Engine harness No. 2
3 Oil pressure sensor

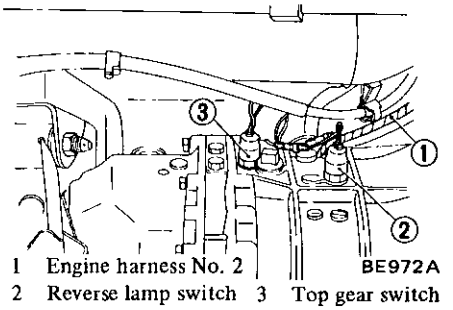

1 Engine harness No. 2
2 Reverse lamp switch
3 Top gear switch

Fig. BE-4 Engine harness No. 2

Instrument harness

Instrument harness is connected to engine room harness and dash harness with five connectors at junction block under the right side of instrument panel.

Three connectors for dash harness are green, blue and black. Two connectors for engine room harness are brown and green.

This harness traverses to the left side of passenger compartment behind instrument panel and services glove box lamp, clock, voltmeter, charge warning lamp and fuel gauge, water temperature and oil pressure gauge, cigarette lighter, speedometer, tachometer, illumination control resistor, combination switch, buzzer, floor temperature warning lamp (California models), ignition switch, steering lock switch, stop lamp switch, electronic fuel injection harness, kickdown switch (automatic transmission mod-

els), turn signal flasher unit, hazard flasher unit and door switch (left hand).

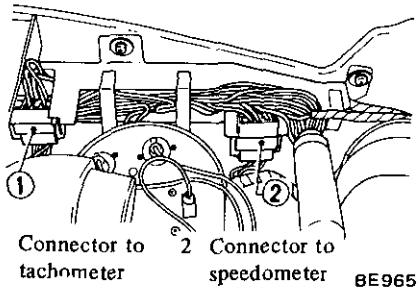

Fig. BE-5 Instrument harness

Dash harness

Dash harness is connected to engine room harness and instrument harness with five connectors at junction block, under the right side of instrument panel and goes to right side of car along instrument panel.

This harness services relay bracket, fuse block, right door switch, hand brake switch, driver's belt switch, brake warning lamp check relay and floor temperature relay.

This harness also has connections for console harness, body harness and air conditioner harness.

At relay bracket, this harness services intermittent wiper amplifier, horn relay, defogger relay and ignition relay.

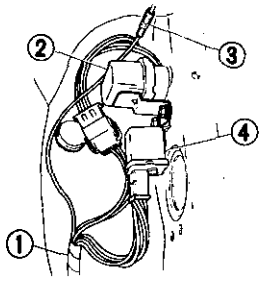

1 Dash harness
2 Brake warning lamp check relay
3 To parking brake switch
4 Floor temperature relay

Fig. BE-6 Dash harness

Body harness

Body harness is connected to dash harness at right side of floor. It goes to rear end along right side of body and traverses to the left side along rear end of trunk compartment. This harness services earth point, rear combination lamps, license lamps, rear window defogger, interior lamp, tail gate switch (2 + 2 seats only), radio antenna and speaker, rear side marker lamp, floor sensor (California models), fuel gauge and fuel pump.

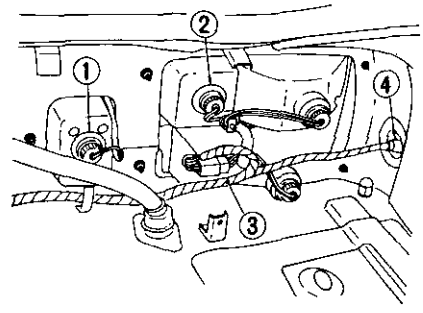

1 Reverse lamp
2 Rear combination
3 Body harness
4 For speaker and antenna

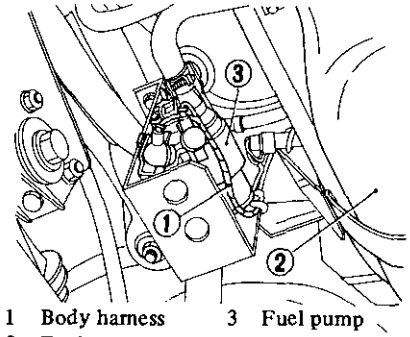

1 Body harness
2 Fuel tank
3 Fuel pump

Fig. BE-7 Body harness

Console harness

Console harness is connected to dash harness with a pair of connectors. It services fog lamp switch, rear defogger switch, defogger warning lamp, seat belt warning lamp, radio receiver, antenna switch, hazard switch and automatic transmission indicator lamp.

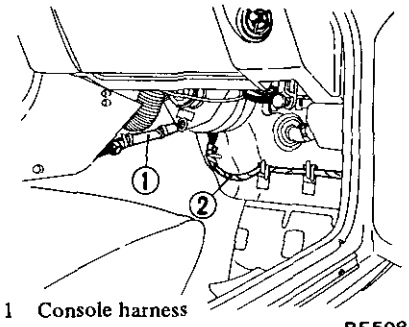

1 Console harness
2 Dash harness

Fig. BE-8 Console harness

Electronic fuel injection harness and electronic fuel injection sub-harness

The electronic fuel injection harness is connected to electronic fuel injection system components. It is connected to the positive battery terminal through a fusible link and to the negative battery terminal through a battery cable terminal at the right side of the engine compartment.

It is connected to the instrument harness under the left side of the passenger compartment instrument panel.

It is connected to the control unit and electronic fuel injection relay in the passenger compartment, and to the dropping resistor, throttle valve switch, air flow meter, cold start valve, air regulator and injectors of each cylinder on the left side of the engine compartment. The electronic fuel injection sub-harness is connected to the electronic fuel injection harness on the left front side of the engine compartment and also to the thermotime switch and water temperature sensor. These harnesses are stamped with an identification number to facilitate maintenance. See Section EF for details.

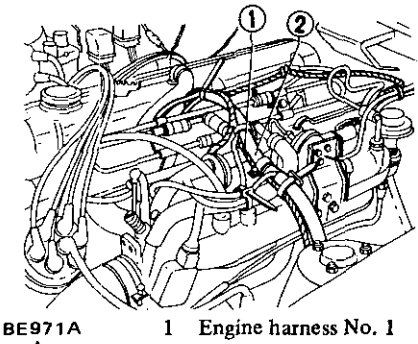

1 Engine harness No. 1
2 Electronic fuel injection harness

Fig. BE-9

INSPECTION

Inspect all electrical circuits referring to wiring or citcuit diagrams.

Circuits should be tested for continuous or short circuit with a conventional test lamp or low reading voltmeter. Before inspection of circuit, insure the following items.

1. Each electrical component part or cable is securely fastened to its connector or terminal.
2. Each connection is tight in place and free from rust and dirt.
3. Each cable covering shows no evidence of cracks, deterioration or other damage.
4. Each terminal is kept away from any adjacent metal parts.
5. Each cable is fastened to its proper connector or terminal.
6. Each grounding bolt is planted tight.
7. Wiring is kept away from any adjacent sharp edges of parts or parts (such as exhaust pipe) having high temperature.
8. Wiring is kept away from any rotating or working parts such as fan pulley, fan belt, etc.
9. Cables between fixed portions and moving equipment are long enough to withstand shocks and vibratory forces.

MAINTENANCE

Wire harness must be replaced if insulation becomes burned, cracked, or deteriorated. Whenever it is necessary to splice or repair a wire, be sure to use resin flux solder or electrical connections. And use insulating tape to cover all splices or bare wire. In replacing wire, correct size wire must be used. Never replace a wire with smaller one. Each harness and wire must be held securely in place with clips or other holding devices to avoid chafing or wearing away insulation due to vibration.

Notes:

a. **Before starting to inspect and repair any part of electrical system or other parts which may lead to a short circuit, disconnect cables at battery terminals as follows:**
Disconnect cable at negative (–) terminal, and then disconnect cable at positive (+) terminal.
Before connecting cables to battery terminals, be sure to clean terminals with a rag. Fasten cable at positive (+) terminal, and then ground cable at negative (–) terminal. Apply grease to the top of these terminals to prevent rust from developing on them.

b. **Never use a screwdriver or service tool to conduct a continuity test. Use test leads to conduct this check.**

c. **Never ground an open circuit or circuits under no load. Use a test lamp (12V-3W) or circuit tester as a load.**

FUSE BLOCK AND FUSIBLE LINK

DESCRIPTION

The fuse and fusible link are protective devices used in an electric circuit. When current increases beyond rated amperage, fusible metal melts and the circuit is broken, thus protecting cable and electrical equipment from burning. Whenever a fuse is melted for one reason or another, use a systematic procedure to check and eliminate cause of problem before installing new fuse.

MAINTENANCE INSTRUCTIONS

Fuse

In nearly all cases, visual inspection can reveal a faulty fuse. If condition of fuse is questionable, conduct a continuity test with a circuit tester or test lamp.

Notes:

a. **If fuse is blown, be sure to eliminate the cause before installing new fuse in position.**

b. **Use fuse of specified rating. Do not use fuse of more than specified rating. See Figure BE-10.**

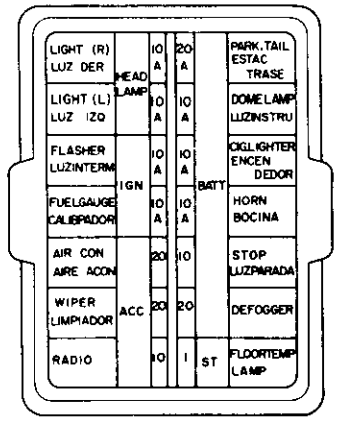

BE974A

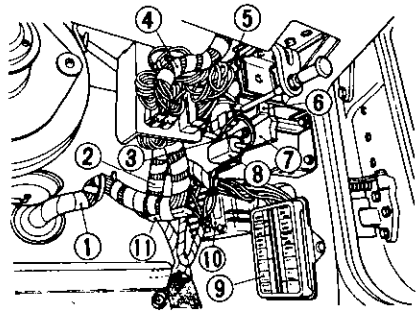

BE969A

1 Engine compartment harness
2 Dash harness
3 Intermittent wiper amplifier
4 Instrument harness
5 Ignition relay
6 Horn relay
7 Relay bracket
8 Timer unit
9 Fuse block
10 Transistor ignition unit
11 Resistor for tachometer

Fig. BE-10 Fuse block

c. **Check fuse holders for condition. If rust or dirt is found thereon, clean metal parts with fine-grained sandpaper until proper metal-to-metal contact is made.**
Poor contact of any fuse holder will often lead to voltage drop or heating in the circuit and could result in improper operation of circuit.

Fusible link

Color	Size mm² (sq in)
Black	1.25 (0.0019)
Green	0.5 (0.00078)
Brown	0.3 (0.00047)

The fusible link holder is mounted on the relay bracket in the engine compartment, a fusible link for electronic fuel injection system is connected between battery cable (+) and fuel injection harness.

A melted fusible link can be detected by either visual or finger-tip inspection. If its condition is questionable, use circuit tester or test lamp, as required, to conduct continuity test. This continuity test can be performed in the same manner as for any conventional fuse.

Notes:

a. **Should melting of fusible link occur, it is possible that critical circuit (power supply or large current carrying circuit) is shorted. In such case, carefully check and eliminate the cause of problem.**
b. **Never wrap periphery of fusible link with vinyl tape. Extreme care should be taken with this link so that it does not come into contact with any other wiring harness or vinyl or rubber parts.**

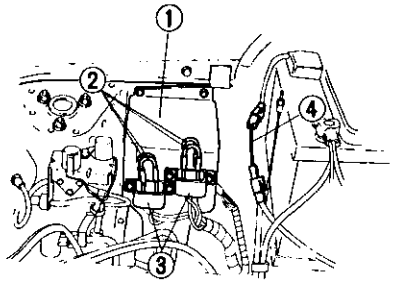

1 Relay bracket
2 Fusible link
3 Fusible link holder
4 Fusible link for electronic fuel injection harness

BE975A

Fig. BE-11 Fusible link

RELAY BRACKET

The relay bracket is so installed that a number relays can be located in the same place for easy maintenance.

There are two relay brackets. One is installed on the hoodledge on the right side of the engine compartment, and the other on the dash side panel.

The following parts are attached to the relay brackets:

A. Engine compartment

1. Voltage regulator
2. Fusible link holder
3. Seat belt (starter) relay (A/T only)
4. Water temperature relay (Non-California models)
5. Air conditioner (compressor) relay (Optional)
6. Condenser

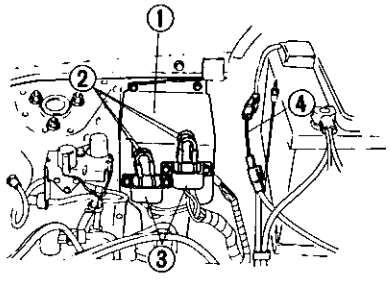

1 Relay bracket
2 Fusible link
3 Fusible link holder
4 Fusible link for electronic fuel injection harness

BE975A

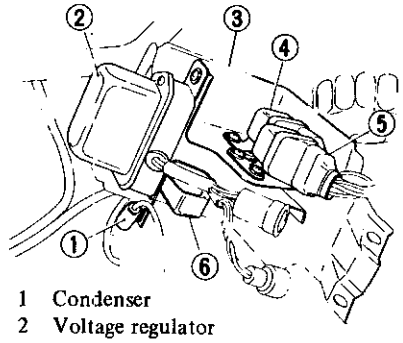

1 Condenser
2 Voltage regulator
3 Relay bracket
4 Water temperature relay (Advance control relay)
5 Seat belt relay (Starter relay) (A/T only)
6 Air conditioner relay (Compressor relay)

BE976A

Fig. BE-12 Relay bracket

B. Inside passenger compartment

1. Intermittent wiper amplifier
2. Horn relay
3. Defogger relay
4. Ignition relay
5. Timer unit

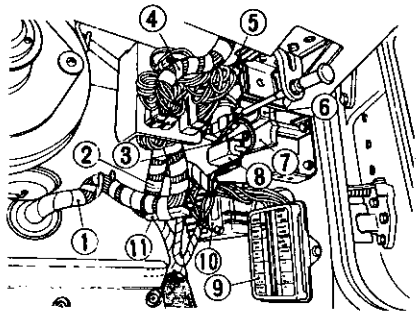

BE969A

1 Engine compartment harness
2 Dash harness
3 Intermittent wiper amplifier
4 Instrument harness
5 Ignition relay
6 Horn relay
7 Relay bracket
8 Timer unit
9 Fuse block
10 Transistor ignition unit
11 Resistor for tachometer

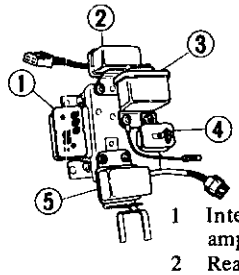

1 Intermittent wiper amplifier
2 Rear defogger relay
3 Ignition relay
4 Horn relay
5 Timer unit

BE977A

Fig. BE-13 Relay bracket

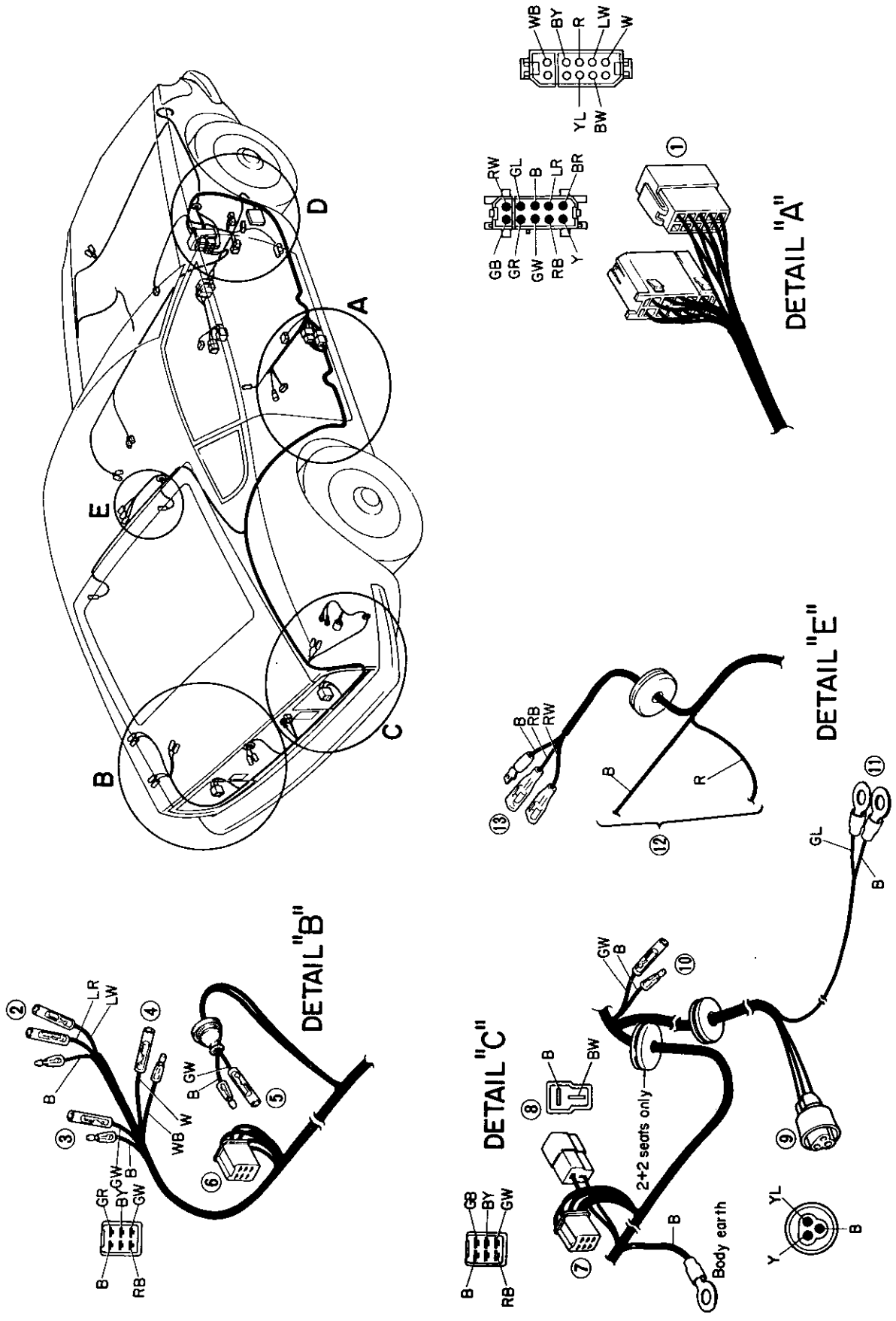

1 To dash harness
2 To antenna motor
3 To rear side marker lamp (L.H.)
4 To speaker
5 To license lamp
6 To rear combination lamp (L.H.)
7 To rear combination lamp (R.H.)
8 To floor sensor
9 To fuel tank gauge
10 To rear side marker lamp (R.H.)
11 To fuel pump
12 To rear window defogger
13 To interior lamp

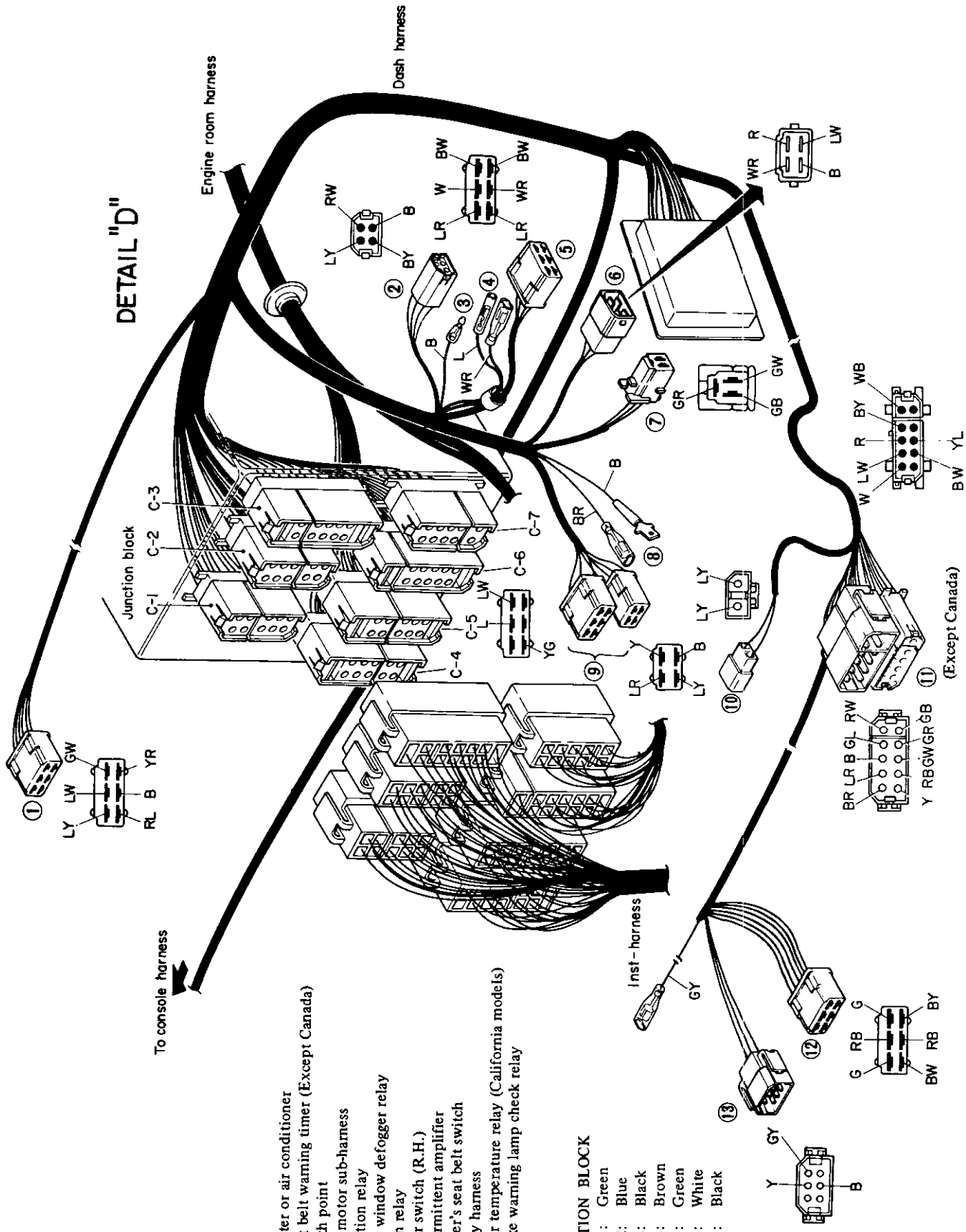

1 To heater or air conditioner
2 To seat belt warning timer (Except Canada)
3 To earth point
4 To fan motor sub-harness
5 To ignition relay
6 To rear window defogger relay
7 To horn relay
8 To door switch (R.H.)
9 To intermittent amplifier
10 To driver's seat belt switch
11 To body harness
12 To floor temperature relay (California models)
13 To brake warning lamp check relay

JUNCTION BLOCK
C-1: Green
C-2: Blue
C-3: Black
C-4: Brown
C-5: Green
C-6: White
C-7: Black

Fig. BE-14 Harness and wire

LIGHTING AND SIGNAL LAMP SYSTEM

CONTENTS

DESCRIPTION ..... BE- 9
BULB SPECIFICATIONS BE-10
CIRCUIT DIAGRAM OF LIGHTING SYSTEM BE-11
HEADLAMP BE-21
AIMING ADJUSTMENT BE-21
HEADLAMP BEAM REPLACEMENT BE-21
FRONT COMBINATION LAMP BE-22
BULB REPLACEMENT BE-22
LAMP BODY REPLACEMENT BE-22
SIDE MARKER LAMP BE-22
BULB REPLACEMENT BE-22
LAMP BODY REPLACEMENT BE-22
INTERIOR LAMP BE-23
BULB REPLACEMENT BE-23
LAMP BODY REPLACEMENT BE-23
REAR COMBINATION LAMP BE-23
BULB REPLACEMENT BE-23
LAMP BODY REPLACEMENT BE-23
LICENSE LAMP BE-23
BULB REPLACEMENT BE-23
LAMP BODY REPLACEMENT BE-24
MAP LAMP BE-24
BULB REPLACEMENT BE-24
LAMP BODY REPLACEMENT BE-24
GLOVE BOX LAMP BE-25
BULB REPLACEMENT BE-25
LAMP BODY REPLACEMENT BE-25
INSPECTION BE-25
AUTOMATIC TRANSMISSION INDICATOR ILLUMINATION LAMP BE-25
BULB REPLACEMENT BE-25
INDICATOR LAMPS BE-25
INSPECTION LAMP BE-25
REMOVAL AND INSTALLATION BE-25
BULB REPLACEMENT BE-25
INSPECTION BE-25
COMBINATION SWITCH BE-26
REMOVAL AND INSTALLATION BE-26
INSPECTION BE-26
DOOR SWITCH BE-27
REMOVAL AND INSTALLATION BE-27
INSPECTION BE-27
STOP LAMP SWITCH BE-27
REMOVAL AND INSTALLATION BE-27
INSPECTION BE-27
BACK-UP LAMP SWITCH BE-27
REPLACEMENT BE-27
INSPECTION BE-27
HAZARD SWITCH BE-28
REMOVAL AND INSTALLATION BE-28
BULB REPLACEMENT BE-28
INSPECTION BE-28
IGNITION AND STARTING SWITCH BE-28
REPLACEMENT BE-28
INSPECTION BE-28
RESISTOR (FOR ILLUMINATION CONTROL) BE-29
REMOVAL AND INSTALLATION BE-29
INSPECTION BE-29
FLASHER UNIT REPLACEMENT BE-29
TROUBLE DIAGNOSES AND CORRECTIONS BE-30
HEADLAMP BE-30
TURN SIGNAL LAMP BE-30
TAIL LAMP, STOP LAMP AND BACK-UP LAMP BE-31

DESCRIPTION

Lighting and signal lamp system includes headlamps, front combination lamps, side marker lamps rear combination lamps, license lamps, interior lamp, map lamp and some illumination lamps.

They are controlled by combination switch, flasher unit, hazard unit, hazard switch and resistor.

Each lighting system is not completely independent; Consequently, there are some wires used in common. Refer to Circuit Diagram for detailed description of each system.

BULB SPECIFICATIONS

Item	Wattage	SAE trade number	Remarks
Headlamp Main / Dimmer	50W/40W	6012	Double filament type
Front combination lamp Turn / Clearance	23W/8W	1034	Double filament type
Side marker lamp	8W	67	
License lamp	7.5W	89	
Rear combination lamp Stop / Tail Tail Reverse Turn	 23W/8W 8W 23W 23W	 1034 67 1073 1073	
Map lamp	5W	–	
Interior lamp	10W	–	
Inspection lamp	8W	67	
Glove box lamp	3.4W	57X	
Automatic transmission indicator illumination lamp	3.4W	57X	A/T only
Indicator lamps (High beam indicator lamp and turn signal indicator lamp)	3.4W	57X	
Hazard switch illumination lamp	1.4W	–	
Fuel warning lamp	3.4W	57X	

CIRCUIT DIAGRAM OF LIGHTING SYSTEM

Headlamp system

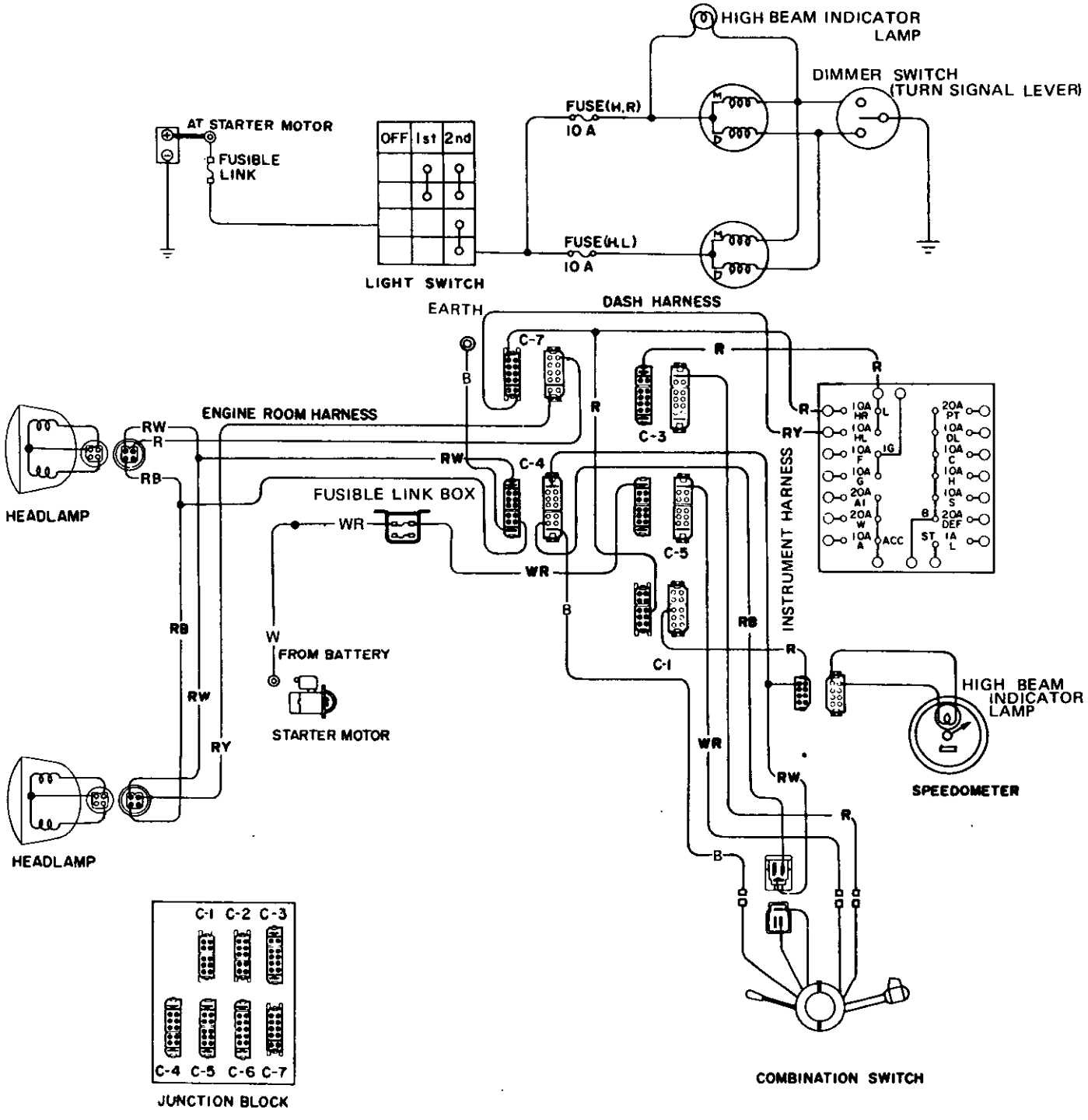

CONNECTOR

C-1 : Green
C-3 : Black
C-4 : Brown
C-5 : Green
C-7 : Black

COLOR CODE

RW : Red with white stripe
R : Red
RB : Red with black stripe
RY : Red with yellow stripe
W : White
WR : White with red stripe
B : Black

BE979A

Fig. BE-15 Circuit diagram for headlamp

Turn signal lamp system

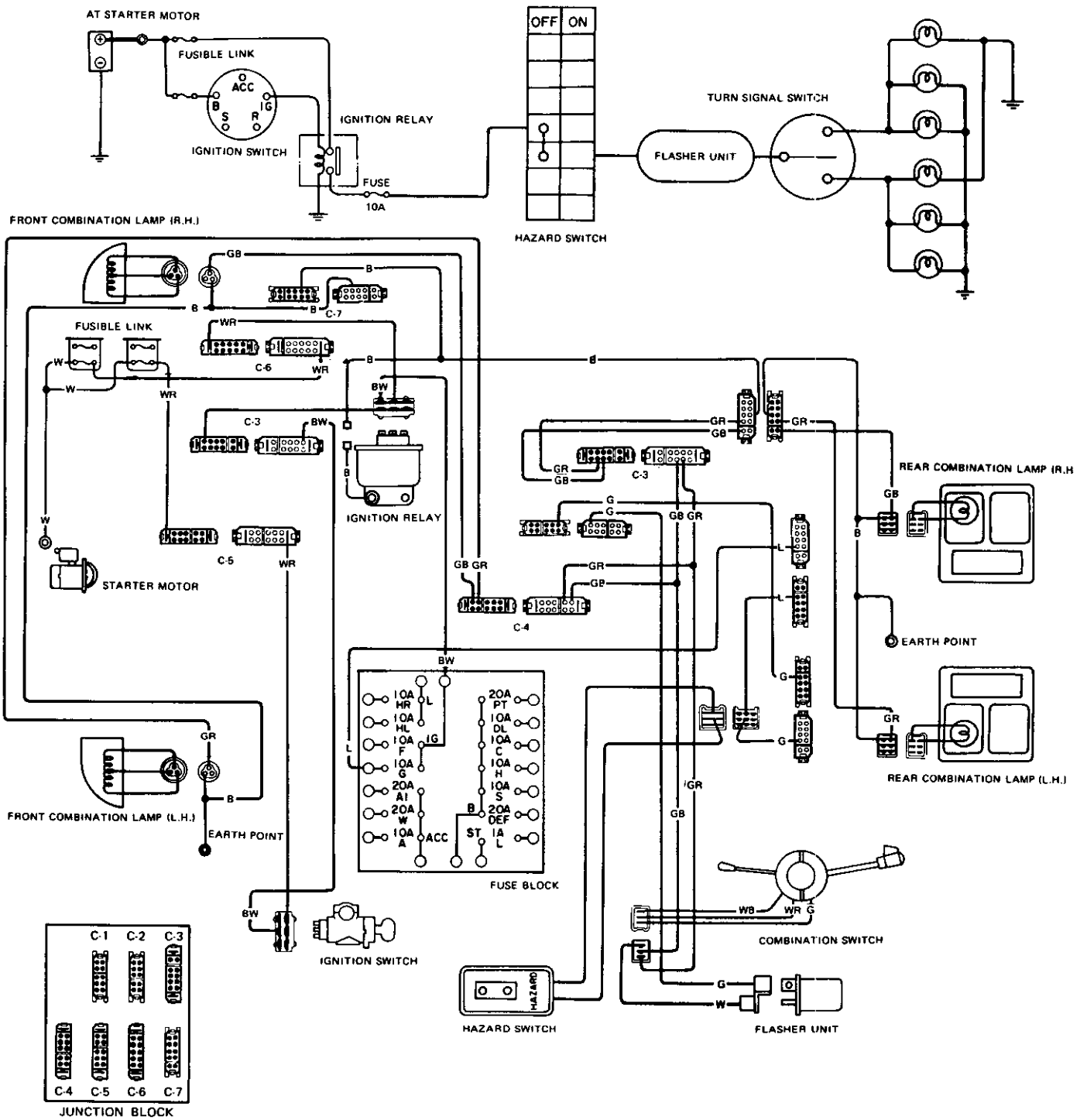

CONNECTOR

C-2 : Blue
C-3 : Brack
C-4 : Brown
C-5 : Green
C-6 : White
C-7 : Brack

COLOR CODE

B : Black
BW : Black with white stripe
W : White
WR : White with red stripe
WB : White with black stripe
G : Green
GR : Green with red stripe

BE980A

Fig. BE-16 Circuit diagram for turn signal lamp

Hazard warning system

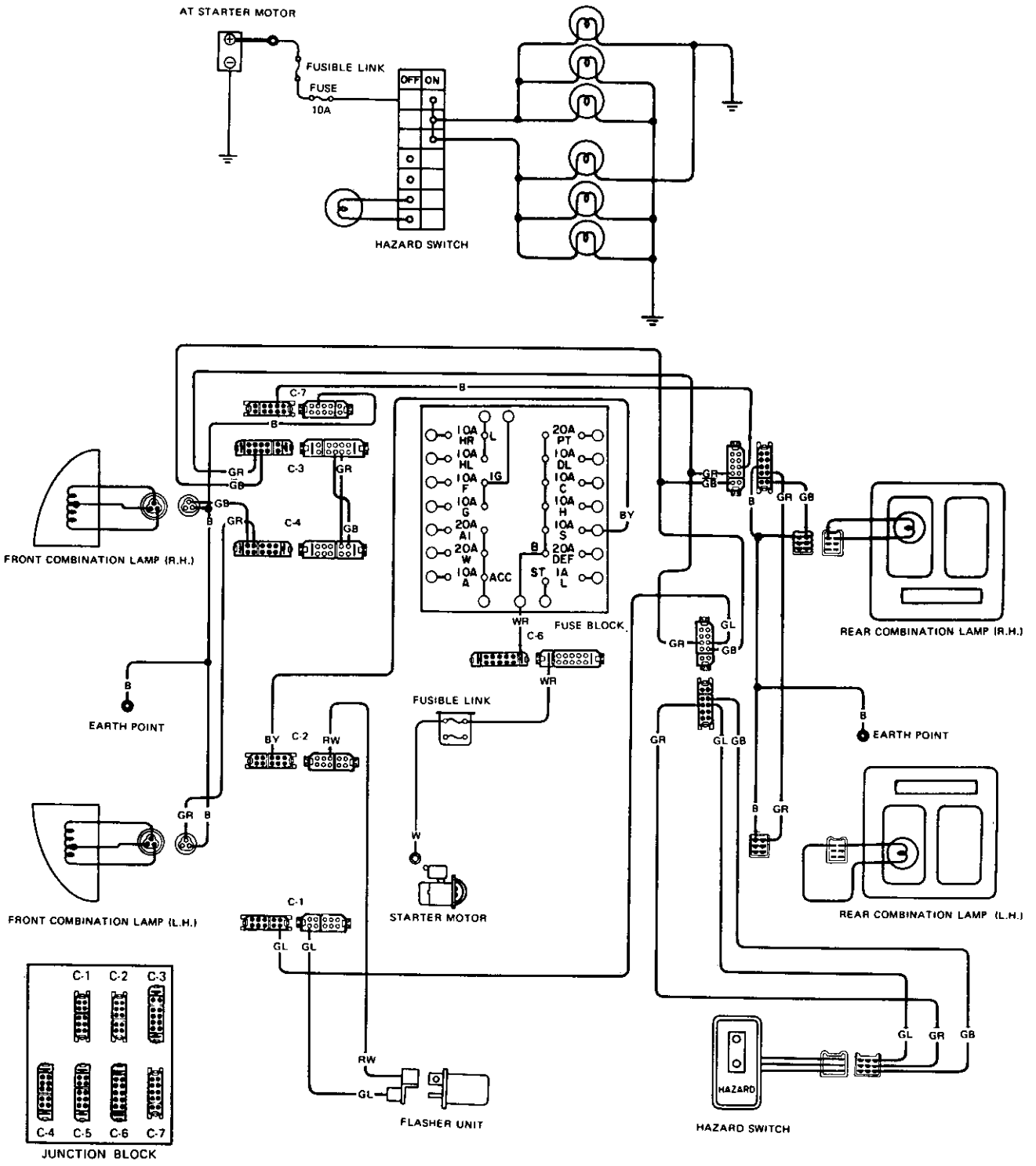

CONNECTOR

C-1 : Green
C-2 : Blue
C-4 : Brown
C-3 : Black
C-6 : White
C-7 : Black

COLOR CODE

B : Black
BY : Black with yellow stripe
W : White
WR : White with red stripe
RW : Red with white stripe
GR : Green with red stripe
GB : Green with black stripe
GL : Green with blue stripe

BE981A

Fig. BE-17 Circuit diagram for hazard warning system

Stop lamp system

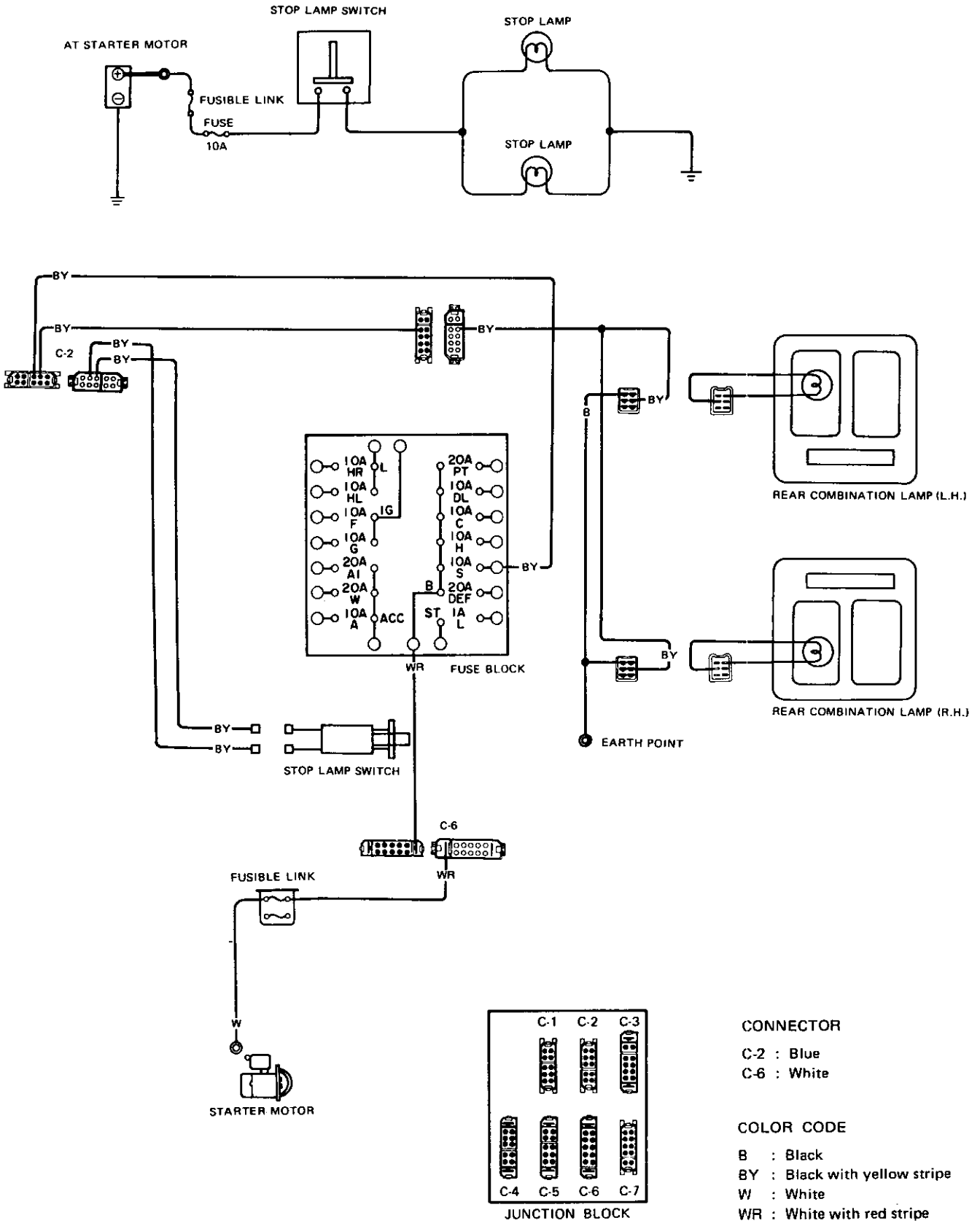

Fig. BE-18 Circuit diagram for stop lamp system

Clearance and tail lamp system

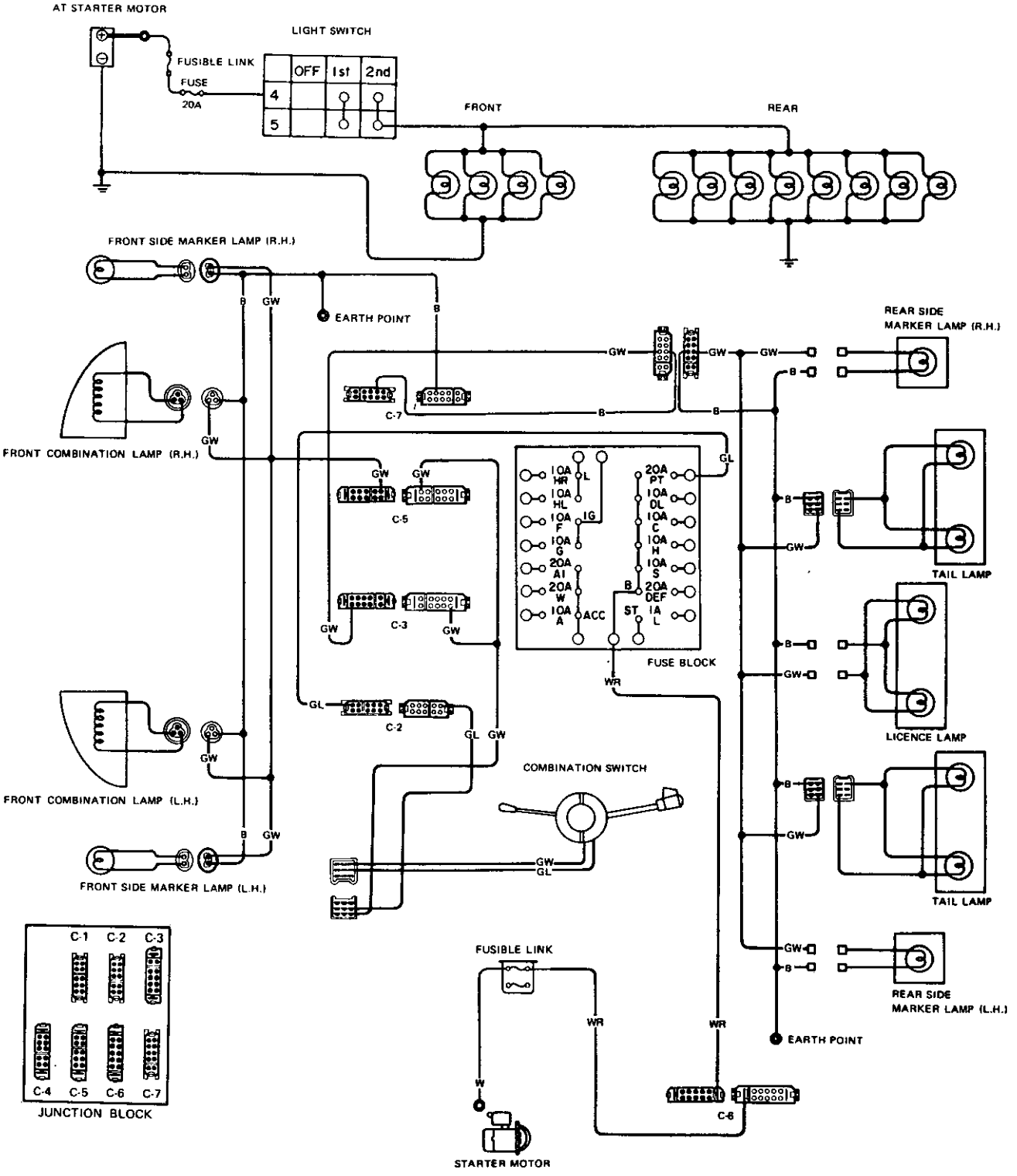

CONNECTOR	COLOR CODE
C-2 : Blue	B : Black
C-3 : Black	WR : White with red stripe
C-5 : Green	GW : Green with white stripe
C-6 : White	GL : Green with blue stripe
C-7 : Black	

BE983A

Fig. BE-19 Circuit diagram for clearance and tail lamp

Reverse lamp system

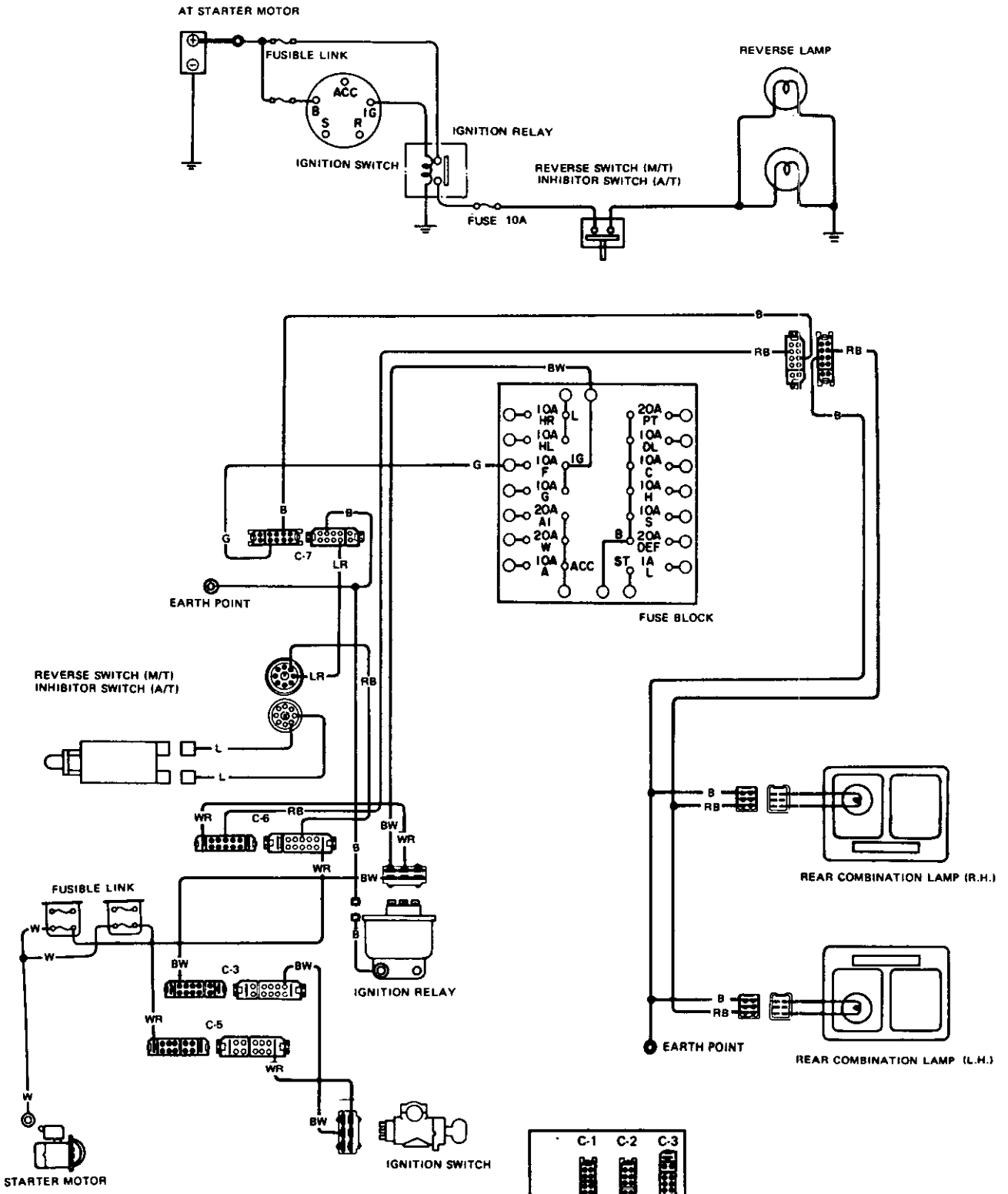

COLOR CODE

B : Black
BW : Black with white stripe
W : White
WR : White with red stripe
RB : Red with black stripe
G : Green
L : Blue
LR : Blue with red stripe

CONNECTOR

C-3 : Black
C-5 : Green
C-6 : White
C-7 : Black

BE984A

Fig. BE-20 Circuit diagram for reverse lamp system

Meter illumination system

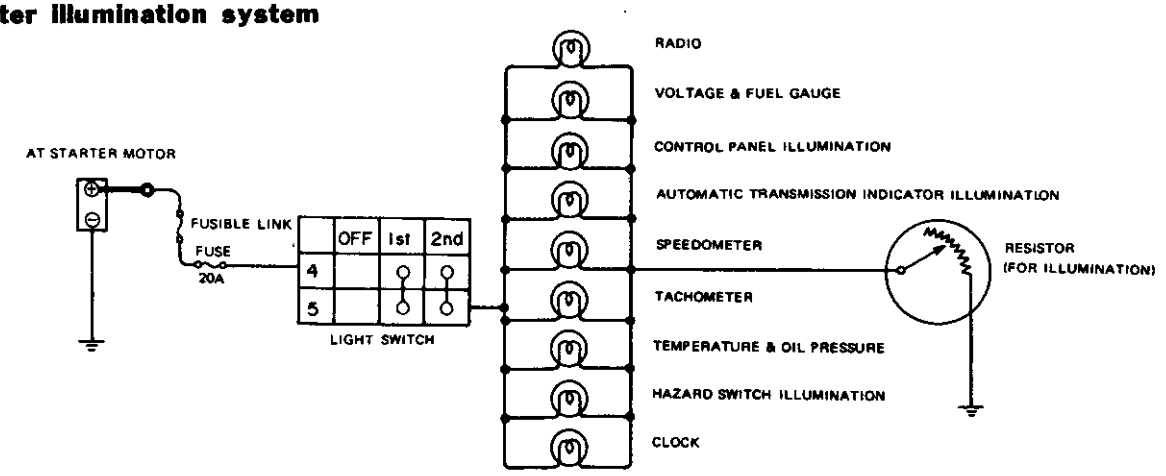

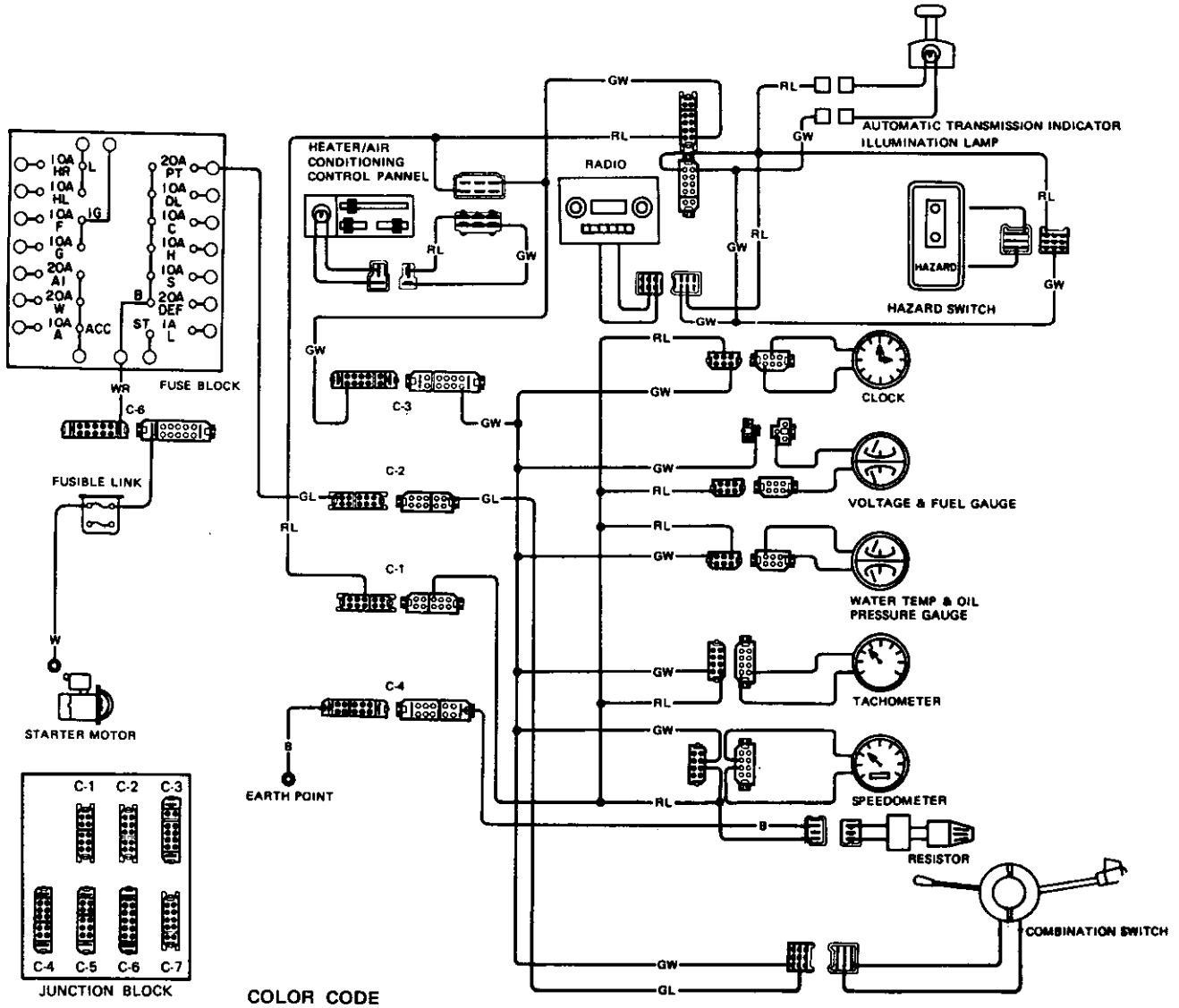

CONNECTOR

C-1 : Green
C-2 : Blue
C-3 : Black
C-4 : Brown
C-6 : White

COLOR CODE

B : Black
W : White
WR : White with red stripe
RL : Red with blue stripe
GW : Green with white stripe
GL : Green with blue stripe

BE985A

Fig. BE-21 Circuit diagram for meter illumination lamp

Interior lamp system

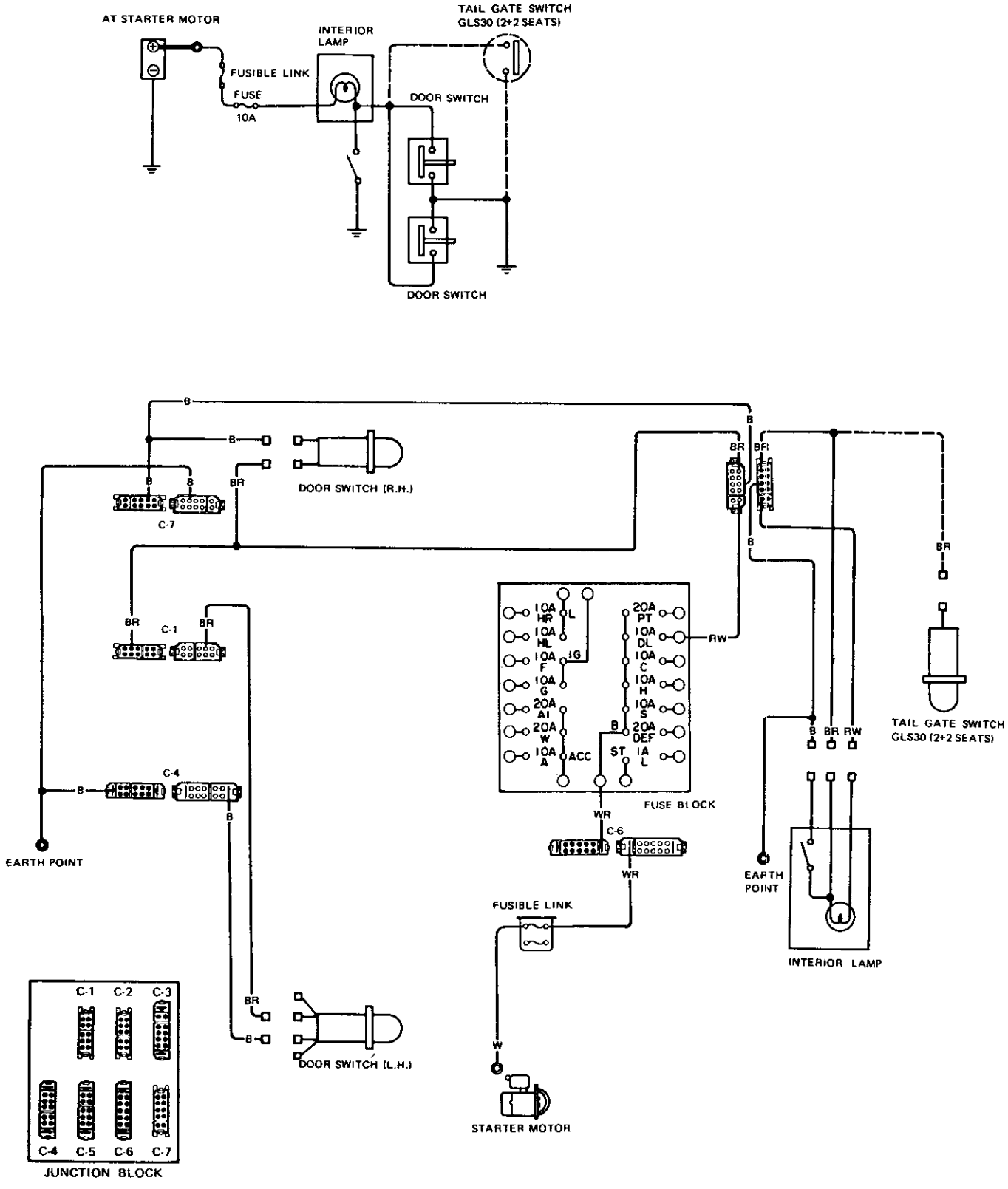

CONNECTOR

C-1 : Green
C-4 : Brown
C-6 : White
C-7 : Black

COLOR CODE

B : Black
BW : Black with white stripe
W : White
WR : White with red stripe
RW : Red with white stripe

BE986A

Fig. BE-22 Circuit diagram for interior lamp

Glove box and cigarette lighter illumination

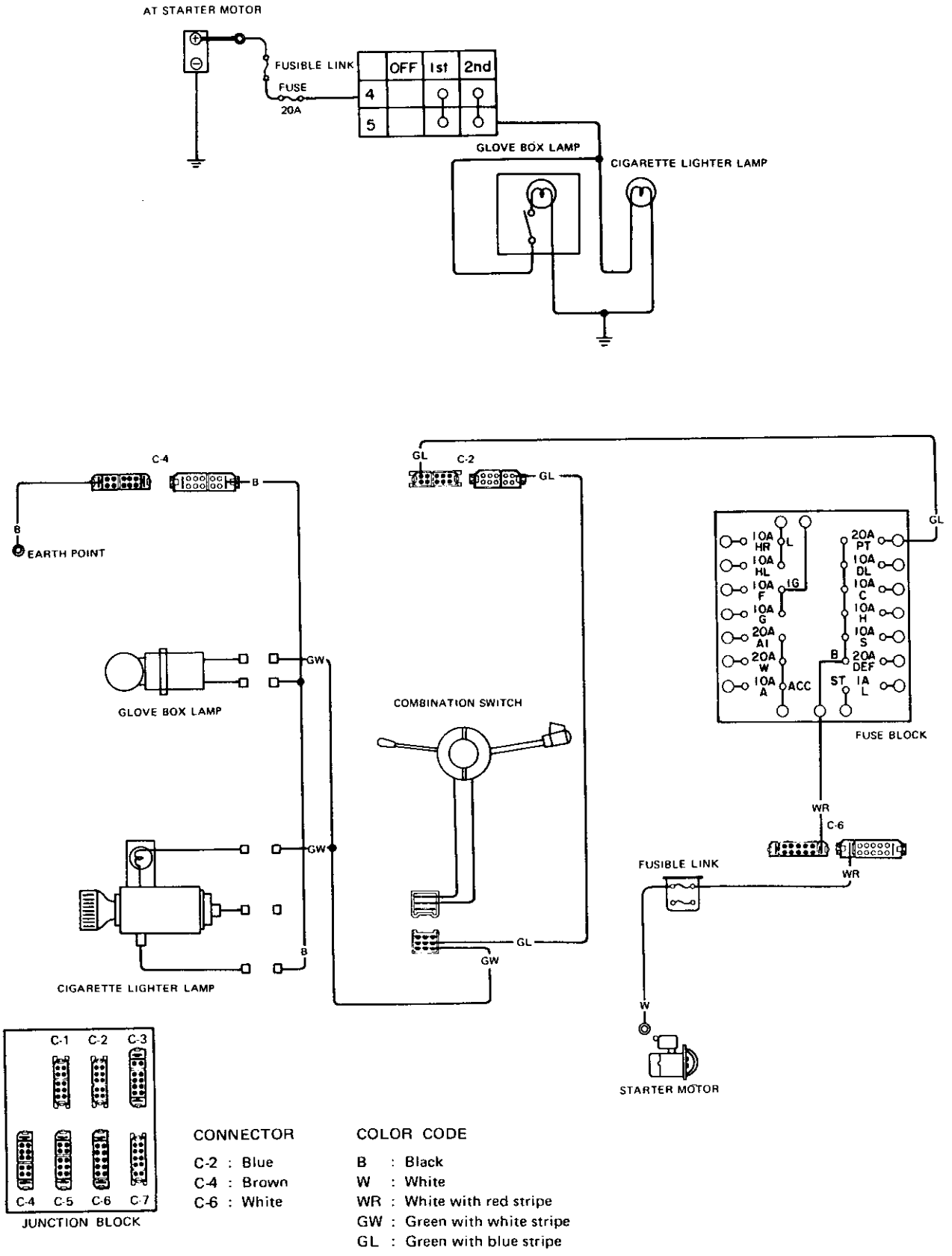

BE987A

Fig. BE-23 Circuit diagram for glave box and cigarette lighter illumination

Map lamp system

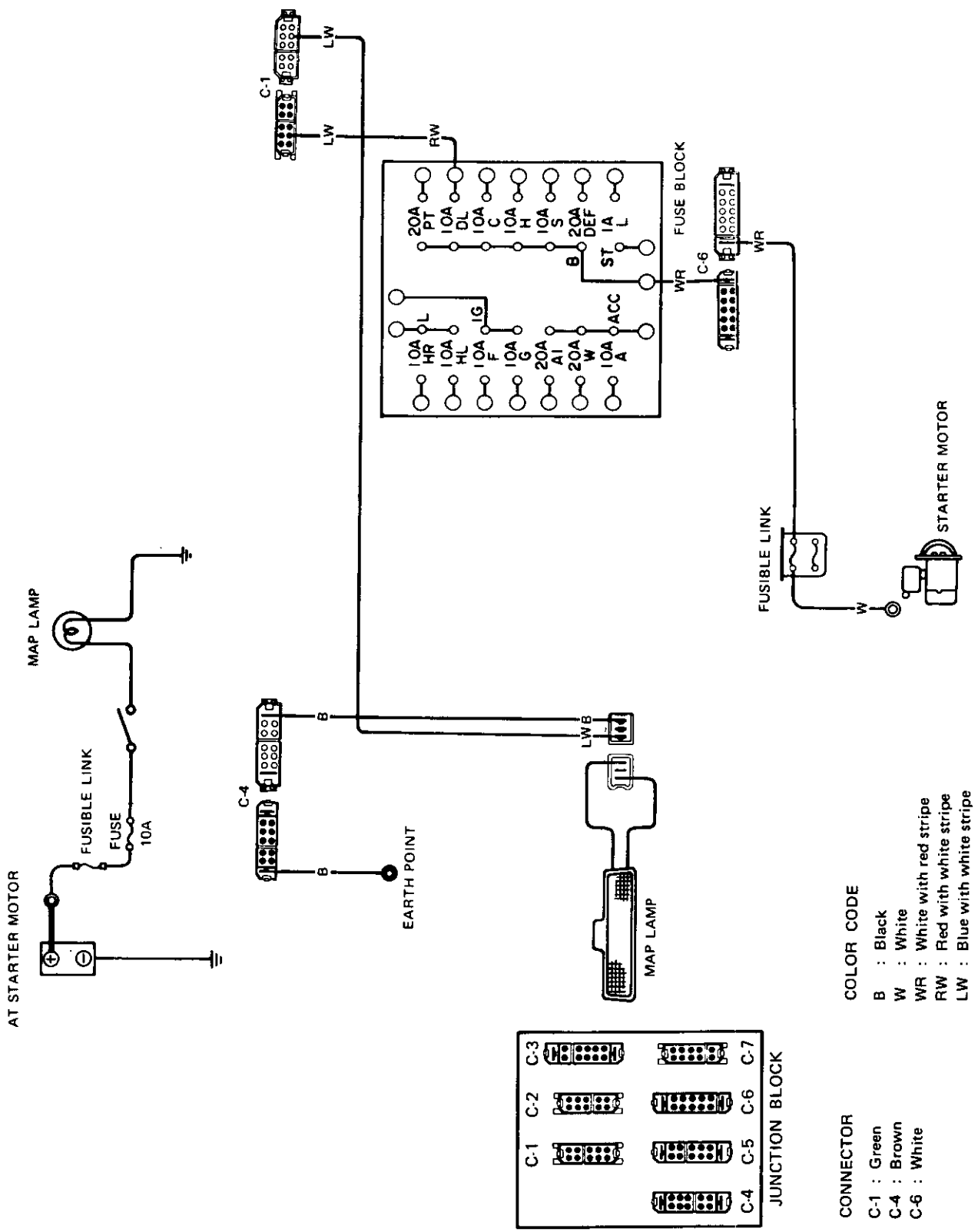

Fig. BE-24 Circuit diagram for map lamp

HEADLAMP

AIMING ADJUSTMENT

Both vertical and horizontal aiming adjustments can be carried out through the cutting hole of headlight case.

Adjust the adjusting screw on upper side of each headlamp to adjust vertical aiming and adjust the adjusting screw on side of each headlamp to adjust horizontal aiming as sketched below.

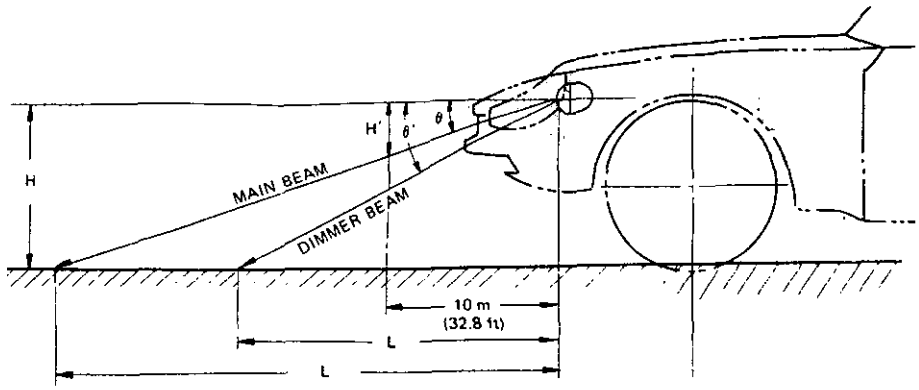

Dimensions/Angle	Values for adjustment
H mm (in)	620.6 (24.43) *624 (24.57)
θ	36'
θ'	1°26'
L m (ft)	59.3 (194.6) *59.6 (195.5)
L' m (ft)	24.8 (81.4) *24.9 (81.7)
H' mm (in)	104.7 (4.12)

* means GS30 (2 + 2 seats)

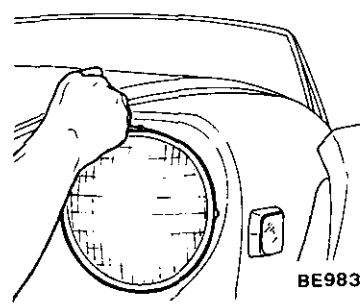

Fig. BE-25 Headlamp aiming adjustment

Notes:

Before making headlamp aiming adjustment, observe the following:

a. **Keep all tires inflated to correct pressure.**
b. **Place car and tester on the same flat surface.**
c. **See that there is no load in car.**
   1) **Gasoline, radiator and engine oil pan filled to correct levels.**
   2) **No passenger.**

When performing headlamp aiming adjustment, use an aiming device, aiming wall screen or headlamp tester. For operating instructions of any aimer, refer to the operation manuals supplied with the unit.

Adjust each headlamp beam as shown in Figure BE-25.

HEADLAMP BEAM REPLACEMENT

1. Disconnect connector behind front fender panel.
2. Remove four screws retaining headlamp housing to fender panel. These screws can be removed through wheel opening of front fender panel.
3. Remove headlamp assembly from body.

Then, remove headlamp retaining ring by loosening three crews. Retaining ring can be taken out by rotating it clockwise.

4. Removing headlamp beam from housing, disconnect a connector. Headlamp beam can then be taken out.
5. Change headlamp beam and connect wiring connector to new beam.
6. Place headlamp beam in position so that three location tabs behind beam fit in with three hollows on mounting ring. Make sure that the letters on beam are in an upright position.
7. Install headlamp retaining ring by rotating it counterclockwise and tighten retaining screws.
8. Install the lamp assembly in the reverse sequence of removal.

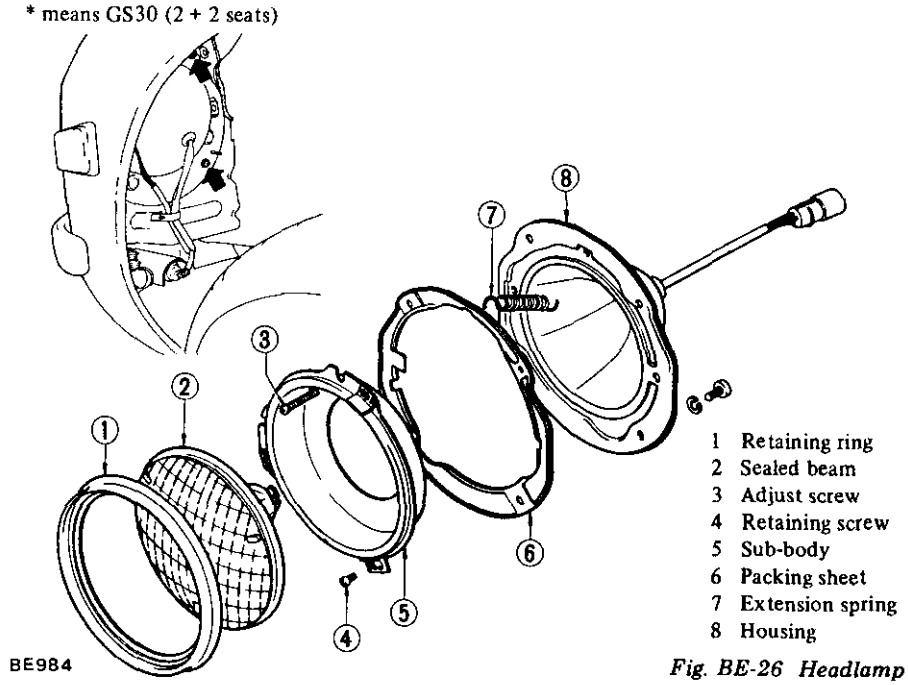

1 Retaining ring
2 Sealed beam
3 Adjust screw
4 Retaining screw
5 Sub-body
6 Packing sheet
7 Extension spring
8 Housing

Fig. BE-26 Headlamp

Notes:

a. **Whenever beam is replaced, adjust headlamp aiming.**
b. **Lamp housing for L.H. and R.H. are different from each other. They can be distinguished by the letter "L" and "R" on lamp housing.**

Bulb wattage
Headlamp beam
Main/Dimmer 50W/40W

FRONT COMBINATION LAMP

BULB REPLACEMENT

1. Remove two screws and remove lens.
2. Push in on bulb, twist it counter-clockwise, and remove it from socket.
3. Insert new bulb into socket, press it inward and rotate it clockwise. Make sure that the bulb is locked in socket.

Bulb wattage
Front combination lamp
Turn/Clearance 23W/8W

LAMP BODY REPLACEMENT

1. Disconnect connector for front combination lamp behind lamp body.
2. Remove front combination lamp cover by removing two screws.
3. Remove screws retaining lamp body to front grille from front of the panel and remove front combination lamp.
4. Installation is in the reverse sequence of removal.

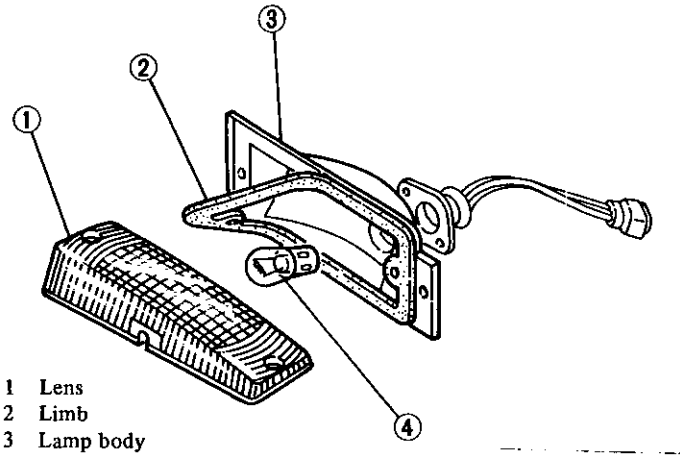

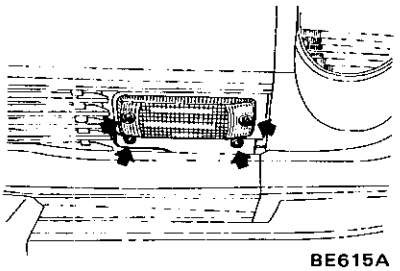

Fig. BE-27 Front combination lamp

SIDE MARKER LAMP

BULB REPLACEMENT

1. Remove two lens retaining screws.
2. Remove lens from lamp body.
3. Push in on bulb, twist it counter-clockwise and remove from socket.
4. Insert new bulb into socket, press it inward and rotate it clockiwse. Make sure that bulb is locked in socket.
5. Install lens in the reverse sequence of removal.

Bulb wattage:
Side marker lamp 8W

LAMP BODY REPLACEMENT

1. Disconnect lead wire at a connector (front) or at two connectors (rear).
2. Remove two lens retaining screws and take out lamp body assembly.
3. Install new lamp body assembly in the reverse sequence of removal.

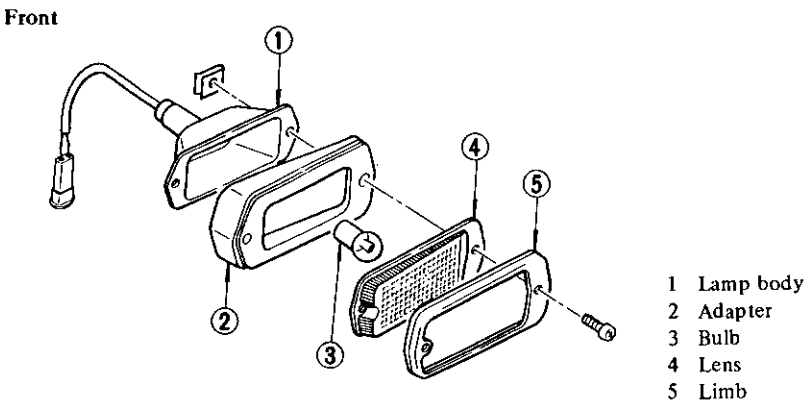

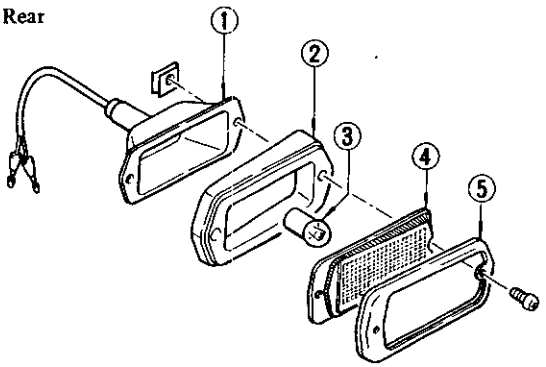

Fig. BE-28 Side marker lamp

INTERIOR LAMP

BULB REPLACEMENT

1. Remove interior lamp assembly from roof. Interior lamp is retained by its spring back.
2. Pulling lamp body out a little, disconnect three connectors on its back.
3. Remove bulb from lamp body through the hole in its back.
4. Install new bulb in the reverse sequence of removal.

Bulb wattage:
Interior lamp 10W

LAMP BODY REPLACEMENT

1. Remove lamp body from roof.
Lamp body is attached by its spring back.
2. Pulling body out from roof, disconnect three connectors. Lamp body can then be taken out easily.
3. Install new lamp body in the reverse sequence of removal.

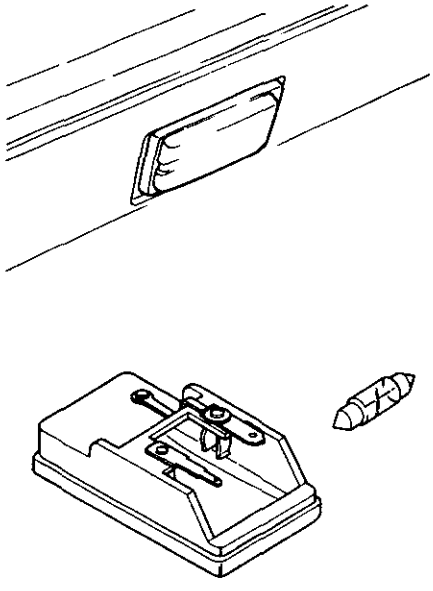

BE987

Fig. BE-29 Interior lamp

REAR COMBINATION LAMP

BULB REPLACEMENT

1. Remove four screws retaining trim cover lid from inside of trunk.
2. Through the hole in the rear panel trim lid, twist socket counterclockwise and remove socket with bulb.
3. Press in on bulb, twist it counterclockwise, and remove it from socket.
4. Install new bulb in the reverse sequence of removal.

Bulb wattage:
Stop/Tail 23W/8W
Tail 8W
Turn 23W
Reverse 23W

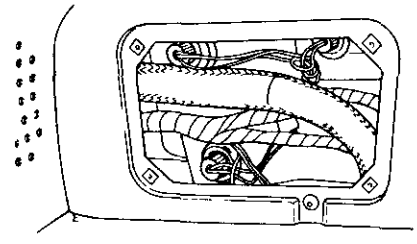

BE988

Fig. BE-30 Replacing bulbs

LAMP BODY REPLACEMENT

1. Remove plastic rivets retaining rear panel finisher and make rear panel finisher free. Refer to Section BF for details.
2. Remove screws retaining rear trim cover and take out rear trim cover.
3. Disconnect lead wires for rear combination lamp at a connector.
4. Remove six flange nuts retaining rear combination lamp body to rear body panel. Lamp body can then be taken out.
5. Rear panel finisher can be separated by removing four screws.
6. Installation is in the reverse sequence of removal.

LICENSE LAMP

BULB REPLACEMENT

1. Remove two screws retaining lamp body to rear panel and take out lamp body. Refer to Figure BE-32.
2. Twist the socket counterclockwise and remove socket, with bulb, from lamp body.
3. Push in on bulb and twist it counterclockwise. Bulb can then be easily taken out from socket.
4. Install new bulb in the reverse sequence of removal.

Bulb wattage:
License lamp ..... 7.5W x 2

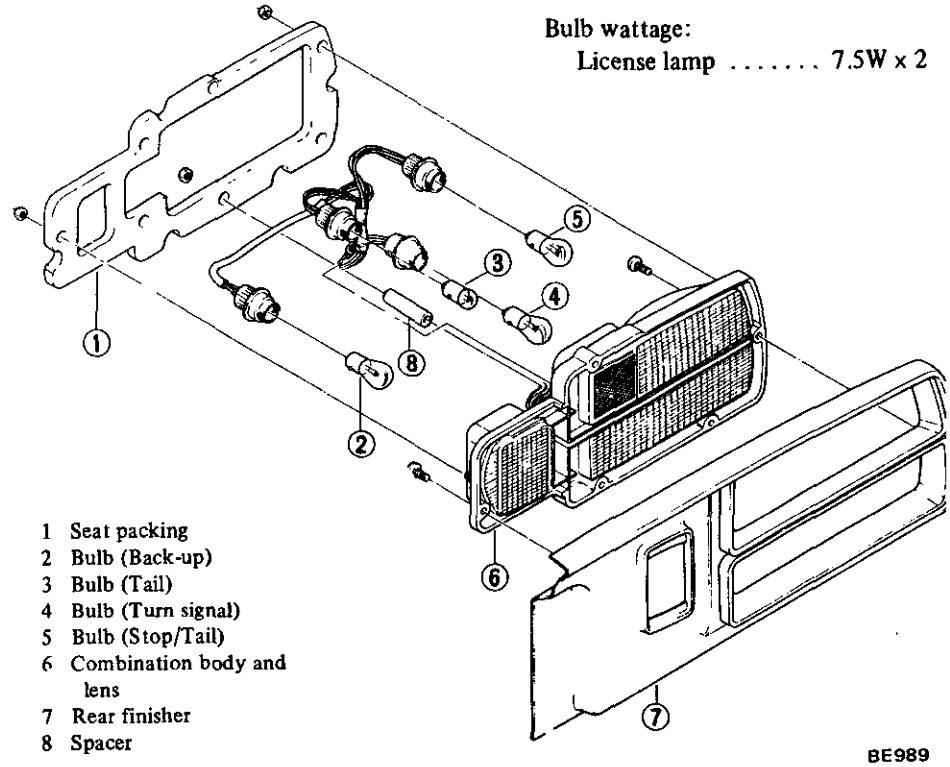

1 Seat packing
2 Bulb (Back-up)
3 Bulb (Tail)
4 Bulb (Turn signal)
5 Bulb (Stop/Tail)
6 Combination body and lens
7 Rear finisher
8 Spacer

BE989

Fig. BE-31 Rear combination lamp

LAMP BODY REPLACEMENT

1. Remove two screws retaining lamp body to rear finisher and take out lamp body.
2. Disconnect pair of lead wires at connectors.
3. Install new lamp body in the reverse sequence of removal.

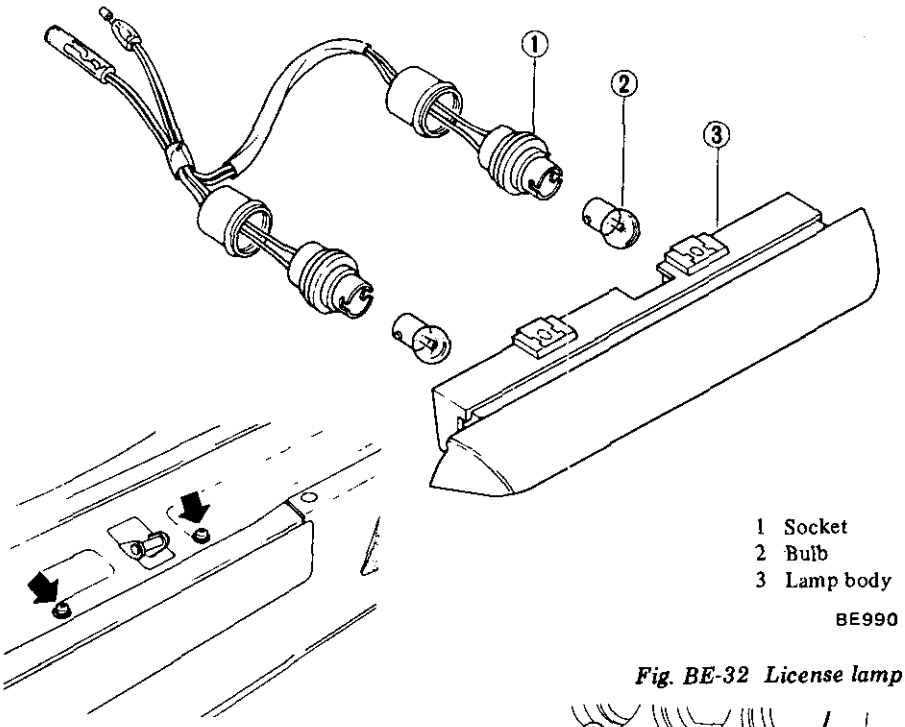

1 Socket
2 Bulb
3 Lamp body

Fig. BE-32 License lamp

MAP LAMP

BULB REPLACEMENT

1. Remove four screws retaining instrument finisher to instrument panel.
2. Pulling instrument finisher out a little, disconnect lead wires at three connectors. Instrument finisher can then be removed from instrument panel.

Note: Three connectors are for map lamp, floor temperature warning lamp (California models) and fuel warning lamp.

3. Remove two screws retaining map lamp body to instrument finisher. Lamp body can then be taken out.
4. Installation is in the reverse sequence of removal.

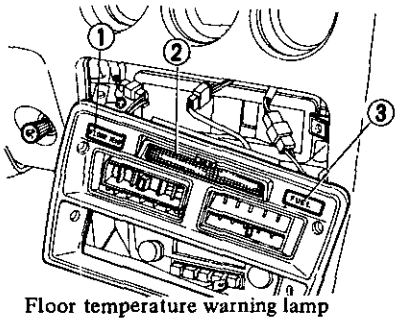

1 Floor temperature warning lamp
2 Map lamp
3 Fuel warning lamp

Fig. BE-33 Removing instrument finisher

3. Twist socket behind map lamp and remove socket with bulb.
4. Extract bulb from socket.
5. Installation is in the reverse sequence of removal.

Bulb wattage:
Map lamp 5W

LAMP BODY REPLACEMENT

1. Remove four screws retaining instrument finisher to instrument panel.
2. Pulling instrument finisher out a little, disconnect three connectors. Instrument finisher can then be removed from instrument panel.

Note: Three connectors are for map lamp and for floor temperature warning lamp (California models) and fuel warning lamp.

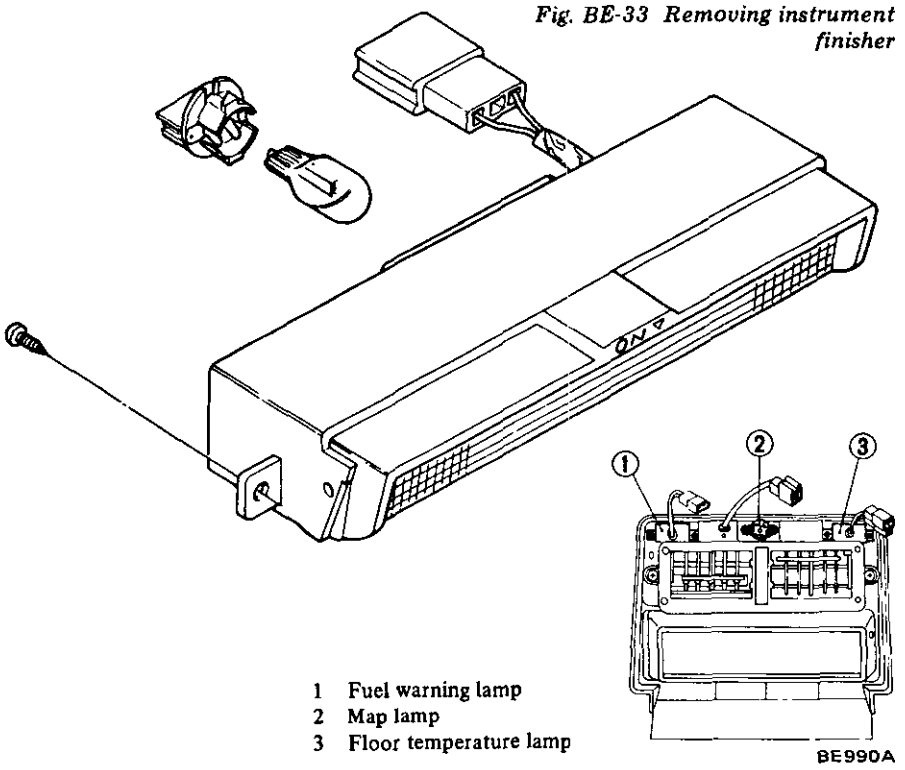

1 Fuel warning lamp
2 Map lamp
3 Floor temperature lamp

Fig. BE-34 Map lamp

GLOVE BOX LAMP

BULB REPLACEMENT

Bulb is installed at the bottom of lamp body. Pushing the bulb into switch body, twist it counterclockwise. Bulb can then be taken out. Install new bulb in reverse sequence of removal.

Bulb wattage:
Glove box lamp 3.4W

LAMP BODY REPLACEMENT

1. Disconnect battery ground cable.
2. Disconnect pair of lead wires at connectors in glove box.
3. Pull the lamp body with bulb out from bracket.
4. Installation is in the reverse sequence of removal.

INSPECTION

Test continuity between two lead wires. When plunger is pressed into lamp body, continuity must not exist. Conversely, continuity must exist when the plunger is projecting.

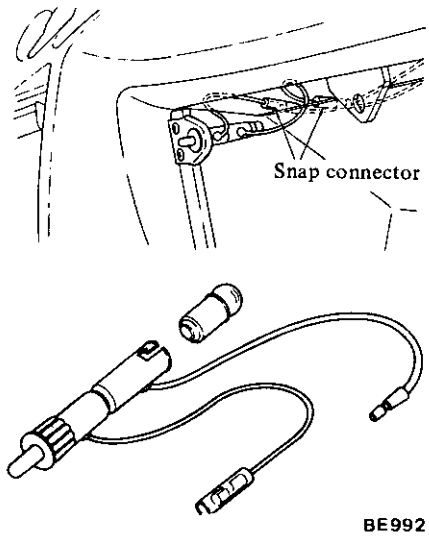

Fig. BE-35 Glove box lamp

AUTOMATIC TRANSMISSION INDICATOR ILLUMINATION LAMP

The illumination lamp is located in the indicator finisher and illuminates the indicator of select lever. Removal and installation is described in Section BF.

BULB REPLACEMENT

1. Remove console box.
2. Remove automatic transmission indicator finisher.
3. Remove socket with bulb from beneath indicator finisher.
4. Remove bulb from socket.
5. Install new bulb in the reverse sequence of removal.

Bulb wattage:
Automatic transmission indicator illumination lamp 3.4W

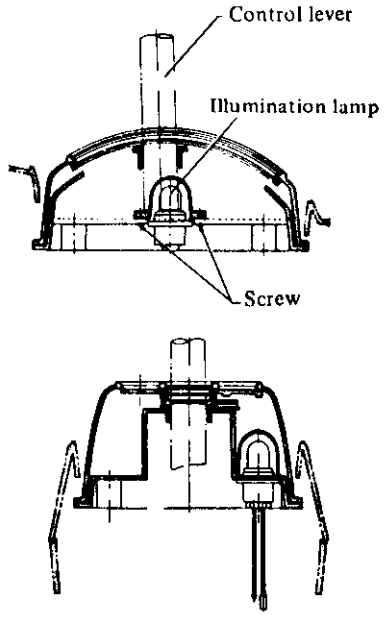

Fig. BE-36 Automatic transmission indicator lamp

INDICATOR LAMPS

Turn signal indicator lamps and high beam indicator lamp are installed on tachometer and speedometer.

They can be replaced easily by pulling socket, with bulb, from back of meter. Refer to Meters and Gauges.

INSPECTION LAMP

Inspection lamp is located on left side of engine room. Should some mechanical difficulty occur at night, this lamp is extremely useful for detection of the source of the problem and/or illumination of the repair job.

REMOVAL AND INSTALLATION

1. Disconnect lead wire at a connector.
2. Remove two screws retaining lamp to engine room. Lamp assembly can then be taken out easily.
3. Installation is in the reverse sequence of removal.

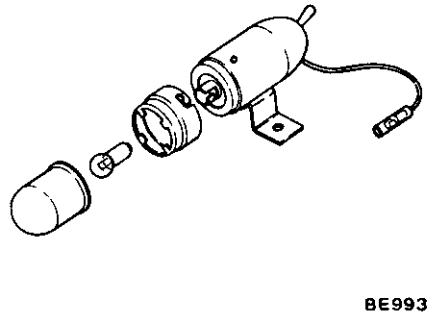

Fig. BE-37 Inspection lamp

BULB REPLACEMENT

1. Twist socket and lens and take them out from lamp housing.
2. Push on lens and twist counterclockwise. Lens can then be taken out from socket.
3. Push in on bulb and twist bulb counterclockwise. Bulb can then be taken out from socket.

INSPECTION

Test continuity between terminal for power source harness and body at each step of switch. Test can be carried out by using ohmmeter or test lamp.

COMBINATION SWITCH

The combination switch consists of a light switch, a wiper switch, a washer switch, a turn signal and dimmer switch. The two levers on the switch are for turn signal switch and for light and wiper switch. They can be separated into two pieces. Position the turn signal switch lever at the first stop position, left or right direction, when changing lanes. Turn signal lamps operate until the lever is released. Move the lever up and down to change headlamp between high and low beams.

Lighting switch is operated by a dial and a small knob. Wiper switch is operated by outer dial; washer switch is at the top of the switch lever.

REMOVAL AND INSTALLATION

1. Disconnect battery ground cable.
2. Remove all screws retaining shell covers to each other and remove shell covers from steering column jacket.
3. Disconnect lead wires from combination switch at six connectors. They consist of one large connector with nine terminals; two with three terminals and three with one terminal.
4. Remove two screws retaining combination switch to steering column jacket.

The switch will then separate into two pieces and can be easily removed.

Note: There is a lead wire between L.H. and R.H. piece. It is unnecessary to disconnect the connector for it.

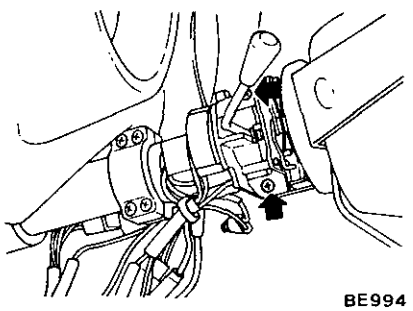

Fig. BE-38 Removing combination switch

5. Installation is in the reverse sequence of removal.

Note: Make sure that location tab of combination switch lines up with hole in steering column jacket. Location tab is inside of turn signal switch.

INSPECTION

Test continuity through turn signal switch at each step and position with a test lamp or ohmmeter. Consult continuity diagram described in Figure BE-39.

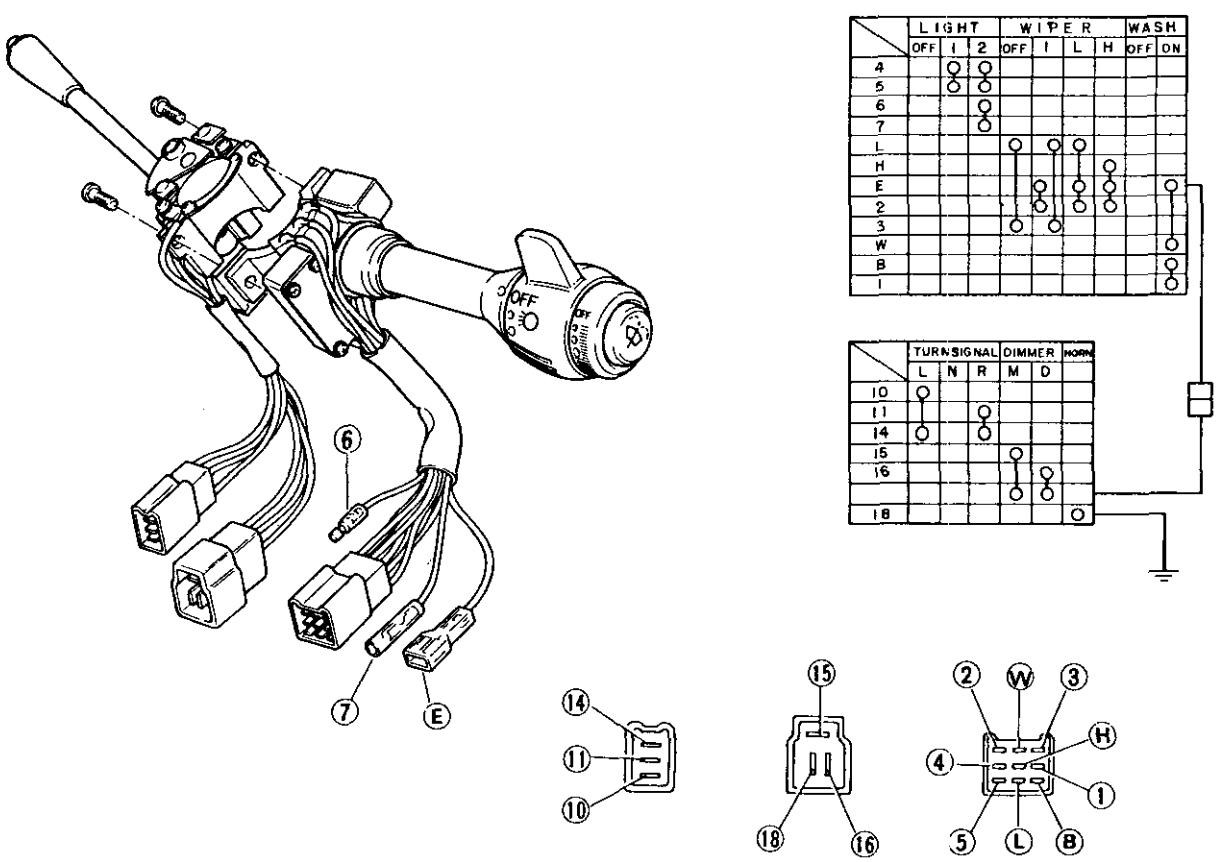

BE995

Fig. BE-39 Combination switch

DOOR SWITCH

The switch for L.H. door is different than that for R.H. door.

The switch for L.H. door has four lead wires. Two of them are for the theft protection system and the other two for the interior lamp.

The switch for R.H. door has two lead wires for the interior lamp.

REMOVAL AND INSTALLATION

Door switch is located at L.H. and R.H. front door pillar.

1. Withdraw switch and wire assembly from front pillar.

Note: If it proves difficult to remove by hand, it can be removed easily with aid of screwdriver.
In using screwdriver, however, take care not to damage painted surface.

2. Disconnect lead wires at connectors. Switch can then be taken out.
3. Installation is in the reverse sequence of removal.

INSPECTION

Test continuity through door switch with a test lamp or ohmmeter.

When plunger is pressed into switch assembly, door switch contacts are open. Conversely, contacts are closed when plunger is projected.

STOP LAMP SWITCH

REMOVAL AND INSTALLATION

Stop lamp switch is integral part of brake pedal height.

Whenever stop lamp switch is removed, some adjustment is required.

1. Disconnect lead wires at connectors.
2. Loosen lock nut. Switch assembly can then be taken out by rotating switch.
3. Install in reverse sequence of removal.

INSPECTION

When plunger is pressed into switch assembly, stop lamp switch contacts are open; contacts are closed when plunger is projected.

Test continuity as previously described with a test lamp or ohmmeter.

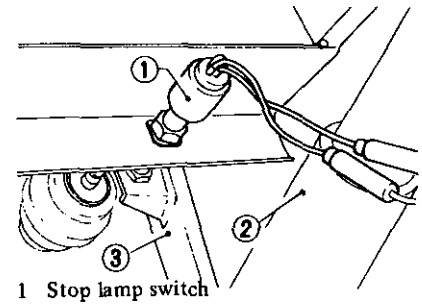

1 Stop lamp switch
2 Steering column
3 Brake pedal

BE997

Fig. BE-41 Stop lamp switch

BACK-UP LAMP SWITCH

REPLACEMENT

Back-up lamp switch is installed on transmission. In manual transmission, this switch is installed on its case. In automatic transmission, the switch is an integral part of inhibitor switch. Removal and installation are described in Sections MT and AT.

INSPECTION

When the transmission lever is in R position, continuity between these harnesses for back-up lamp switch must exist.

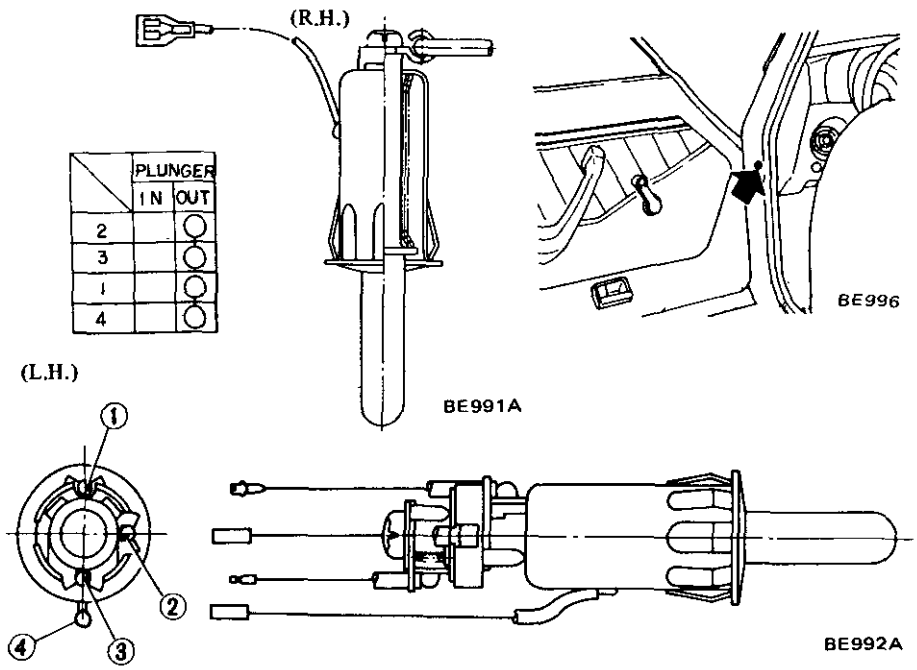

Fig. BE-40 Door switch

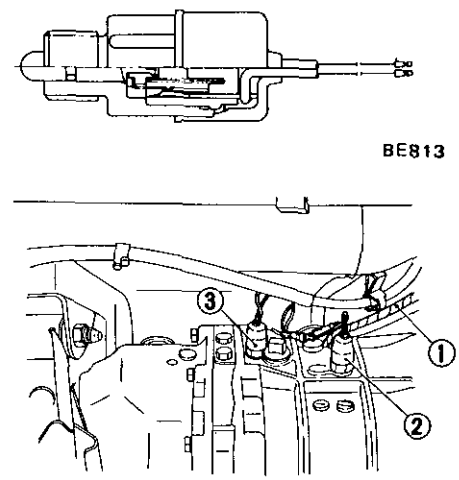

1 Engine harness No. 2
2 Reverse lamp switch
3 Top gear switch

BE972A

Fig. BE-42 Back-up switch

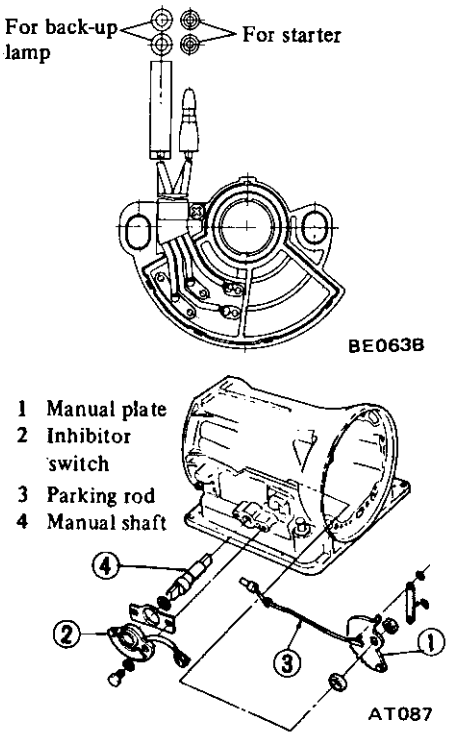

Fig. BE-43 Inhibitor switch

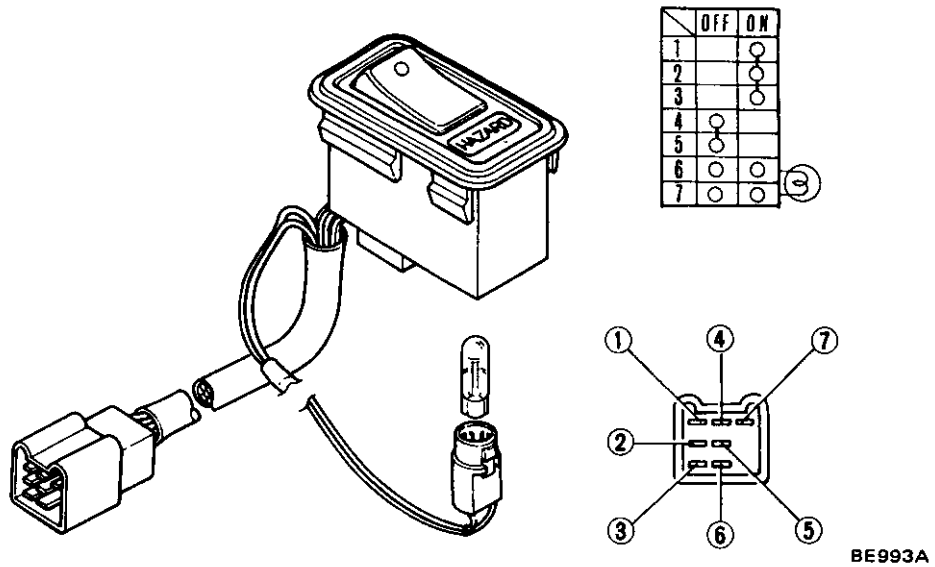

Fig. BE-44 Hazard switch

HAZARD SWITCH

REMOVAL AND INSTALLATION

1. Disconnect battery ground cable.
2. Remove console box, referring to Section BF.
3. From behind console box, grasp nail of switch body and push it out of console box.
4. Disconnect lead wires at a connector.
5. Installation is in the reverse sequence of removal.

Note: Switch body can be installed on console box only by pressing it in.

BULB REPLACEMENT

1. Take out switch assembly as described previously.
2. Push the socket and twist counterclockwise; socket with bulb can then be taken out.
3. Extract the bulb from socket.
4. Installation is in the reverse sequence of removal.

Bulb wattage:

Hazard switch illumination lamp 1.4W

INSPECTION

Test continuity through the switch at each step with an ohmmeter or test lamp.

The continuity diagram is indicated in the following figure.

IGNITION AND STARTING SWITCH

The ignition switch is installed at bottom of steering lock. For information on engine electrical system, refer to Section EE.

REPLACEMENT

1. Remove screws retaining shell covers to each other.
2. Remove shell covers and disconnect lead wires at a connector.

Note: Connector is at the bottom of steering lock.

3. Remove screw retaining switch to steering lock.

Switch assembly can be taken out easily.

4. Installation is in reverse sequence of removal.

INSPECTION

Test continuity through ignition switch at each step with ohmmeter or test lamp. Refer to following continuity diagram.

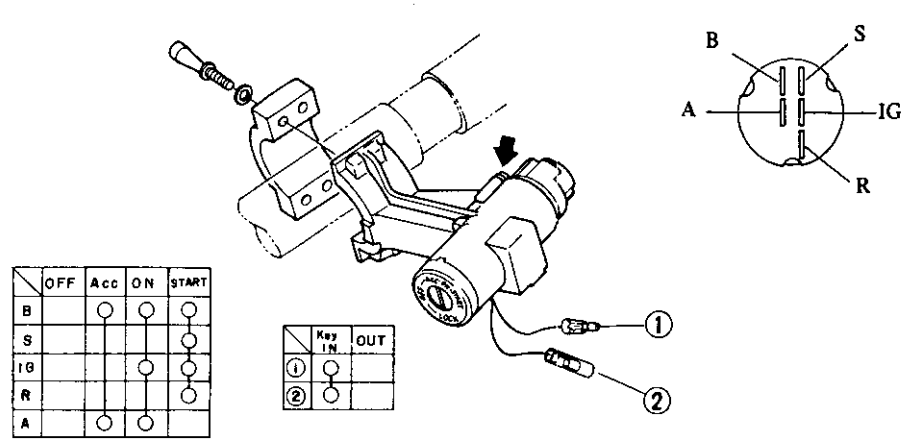

Fig. BE-45 Ignition and starting switch

RESISTOR (For illumination control)

This resistor controls the brightness of illumination for each meter, clock, radio and heater control; it is a variable resistor and its value can be controlled by a knob.

REMOVAL AND INSTALLATION

1. Remove knob of switch; it should come off easily.
2. Remove three screws retaining resistor bracket to instrument panel from behind of instrument panel.
3. Disconnect lead wire to resistor at a connector behind instrument harness.

Switch assembly can then be taken out from behind instrument panel.

4. Remove nut retaining resistor to bracket then resistor can be taken out.

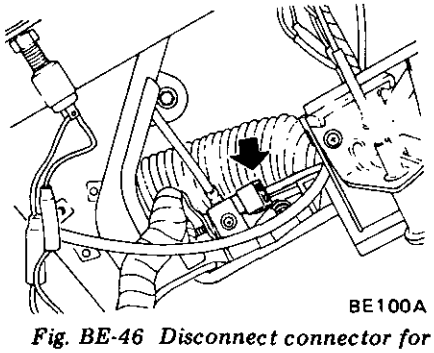

Fig. BE-46 Disconnect connector for resistor

5. Installation is in the reverse sequence of removal.

INSPECTION

Test continuity and resistance between two lead wires with ohmmeter.

When switch is in OFF position, continuity must not exist. In ON position the resistance varies from about 10 Ω to 0Ω depending on the setting of the knob.

FLASHER UNIT REPLACEMENT

Two flasher units are installed at L.H. side trim under instrument panel. One is for turn signal and the other is for hazard. They are different from each other.

1. Disconnect battery ground cable.
2. Disconnect lead wires at connector.
3. Remove screw retaining flasher unit.
4. Install new flasher unit in the reverse sequence of removal.

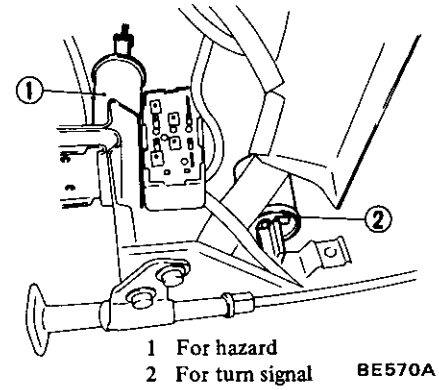

Fig. BE-48 Flasher units

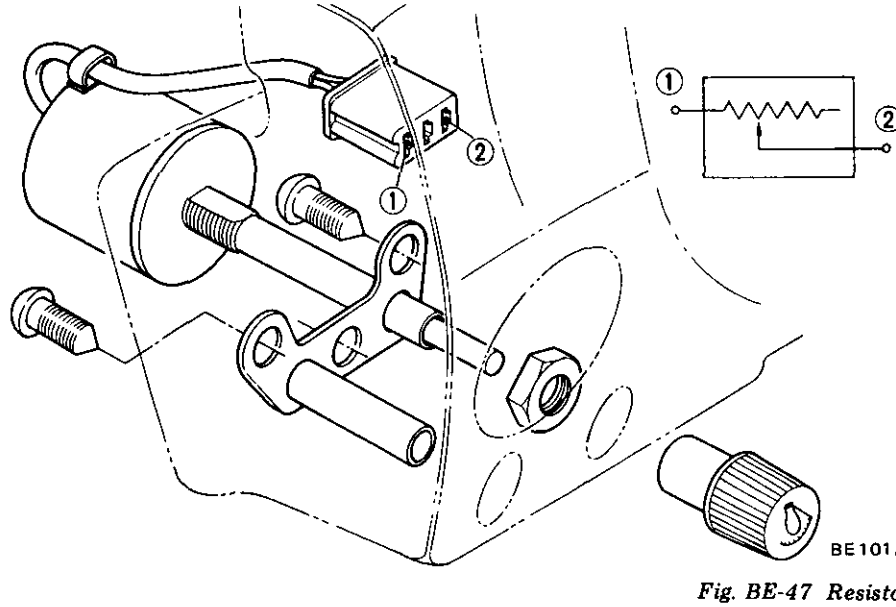

Fig. BE-47 Resistor

TROUBLE DIAGNOSES AND CORRECTIONS

HEADLAMP

Condition	Probable cause	Corrective action
Headlamps do not light for either high or low beams.	Burnt fusible link.	Correct cause and replace fuse.
	Loose connection or open circuit.	Check wiring and/or repair connection.
	Faulty combination switch.	Conduct continuity test and replace if necessary.
	No ground.	Clean and tighten ground terminal.
High beam cannot be switched to low beam or vice versa.	Faulty combination switch.	Conduct continuity test and replace if necessary.
Headlamps dim.	Partly discharged or faulty battery.	Measure specific gravity of electrolyte and recharge or replace battery if necessary.
	Faulty charging system.	Measure voltage at headlamp terminals. If it is less than 12.8V, check charging system for proper operation.
	Poor ground or loose connection.	Clean and/or tighten.
	Burnt fusible link.	Replace.
Headlamp lights on only one side.	Loose headlamp connection.	Repair.
	Faulty headlamp beam.	Replace.

TURN SIGNAL LAMP

Condition	Probable cause	Corrective action
Turn signals do not operate.	Burnt fuse.	Correct cause and replace.
	Faulty ignition relay.	Check for operation of circuits (i.e., meters and gauges) electrically connected to ignition relay. If they do not function, replace ignition relay.
	Loose connection or open circuit.	Check wiring and/or repair connection.
	Faulty flasher unit.	Replace.
	Faulty turn signal switch.	Conduct continuity test and replace if necessary.
Flashing cycle is too slow, (Pilot lamp does not go out.) or too fast.	Bulbs of other than specified wattage are being used.	Replace with one specified.
	Burnt bulbs.	Replace.
	Loose connection.	Repair.
	Faulty flasher unit.	Replace.
Flashing cycle is irregular.	Burnt bulb.	Replace.
	Loose connection.	Repair.
	Bulb of other than specified wattage is being used.	Replace with one specified.

TAIL LAMP, STOP LAMP AND BACK-UP LAMP

Condition	Probable cause	Corrective action
Both right and left lamps do not light.	Burnt fuse.	Correct cause and replace.
	Faulty ignition relay (Back-up lamp only).	Check for operation of circuits (i.e., meters, gauges and turn signal lamp) electrically connected to ignition relay. If they do not function, replace ignition relay.
	Faulty back-up lamp switch. Faulty inhibitor switch.	Conduct continuity test and replace if necessary.
	Loose connection or open circuit.	Check wiring and/or repair connection.
Lamp on only one side lights.	Burnt bulb.	Replace.
	Loose bulb.	Repair lamp socket.

METERS AND GAUGES

CONTENTS

DESCRIPTION BE-31
BULB SPECIFICATIONS BE-32
CIRCUIT DIAGRAM BE-33
METER AND GAUGE REPLACEMENT BE-39
TACHOMETER BE-39
SPEEDOMETER BE-40
TEMP-OIL AND VOLT-FUEL GAUGES BE-41
OIL PRESSURE AND WATER TEMPERATURE INDICATING SYSTEM BE-42
DESCRIPTION BE-42
REPLACEMENT BE-42
INSPECTION BE-42
VOLTMETER AND FUEL LEVEL INDICATING SYSTEM BE-42
DESCRIPTION BE-42
REPLACEMENT BE-42
INSPECTION BE-43
CHARGE WARNING SYSTEM BE-43
DESCRIPTION BE-43
REPLACEMENT BE-44
INSPECTION BE-44
BRAKE WARNING SYSTEM BE-44
DESCRIPTION BE-44
REPLACEMENT BE-45
INSPECTION BE-45
TROUBLE DIAGNOSES AND CORRECTIONS BE-45
SPEEDOMETER BE-45
WATER TEMPERATURE AND OIL PRESSURE GAUGES BE-46
FUEL GAUGE BE-47

DESCRIPTION

This section includes information on all meters and gauges. Bulbs for indicator or for illumination can be easily replaced by twisting bulb socket.

All meters and gauges can be easily replaced without removing instrument panel:

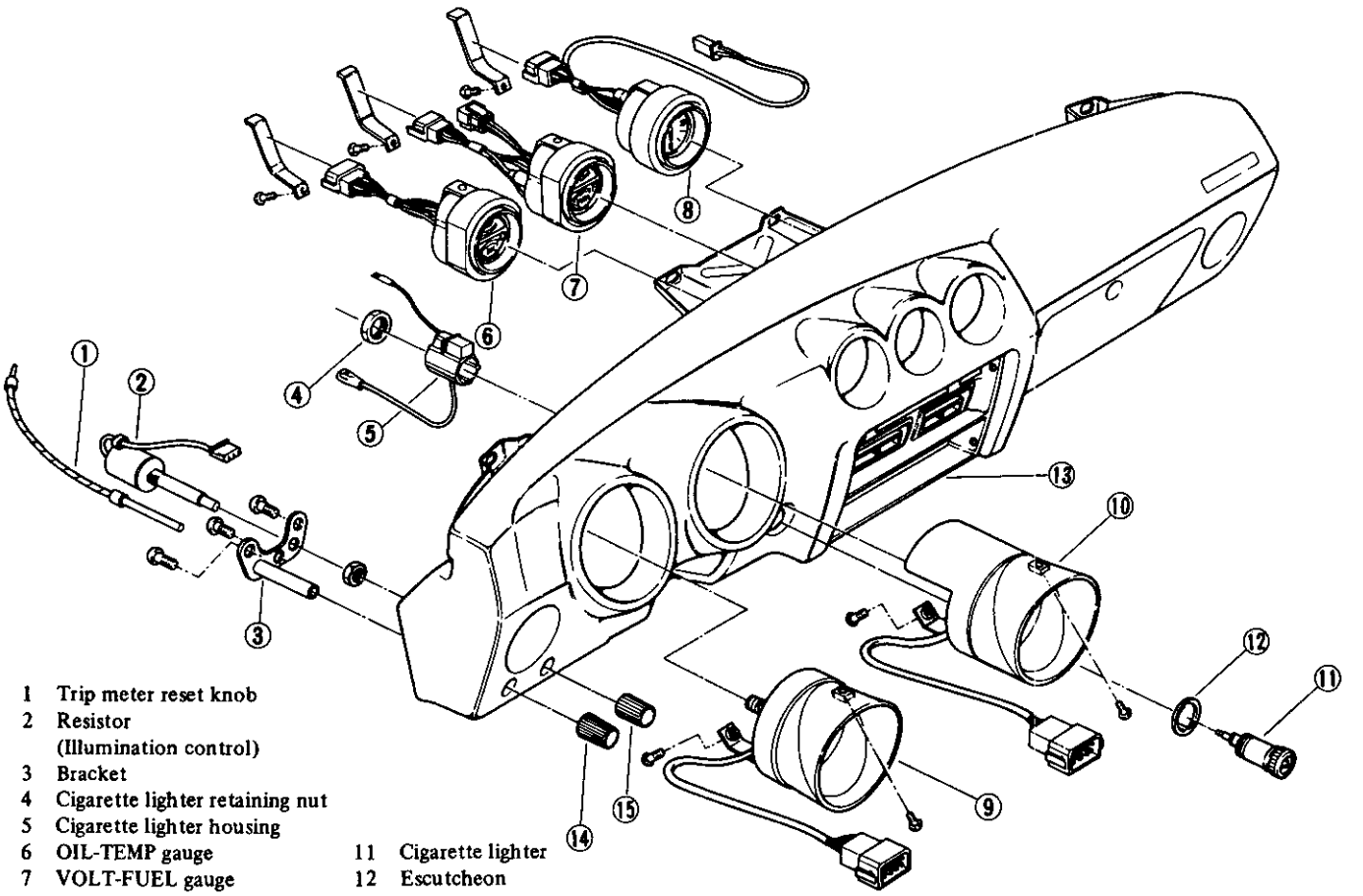

1 Trip meter reset knob
2 Resistor (Illumination control)
3 Bracket
4 Cigarette lighter retaining nut
5 Cigarette lighter housing
6 OIL-TEMP gauge
7 VOLT-FUEL gauge
8 Clock
9 Speedometer
10 Tachometer
11 Cigarette lighter
12 Escutcheon
13 Instrument finisher
14 Knob (Tripmeter reset)
15 Knob (Resistor)

BE995A

Fig. BE-49 Meters and gauges

BULB SPECIFICATIONS

Item	Wattage	Q'ty	SAE trade number	Remarks
Speedometer Illumination lamp	3.4W	2	57X	
Tachometer Illumination lamp	3.4W	2	57X	
Brake warning lamp	3.4W	1	57X	
OIL-TEMP gauge illumination	3.4W	1	57X	
VOLT-FUEL gauge illumination	3.4W	1	57X	
CLOCK illumination lamp	3.4W	1	57X	
Charge warning lamp	3.4W	1	57X	

CIRCUIT DIAGRAM

Tachometer operating system

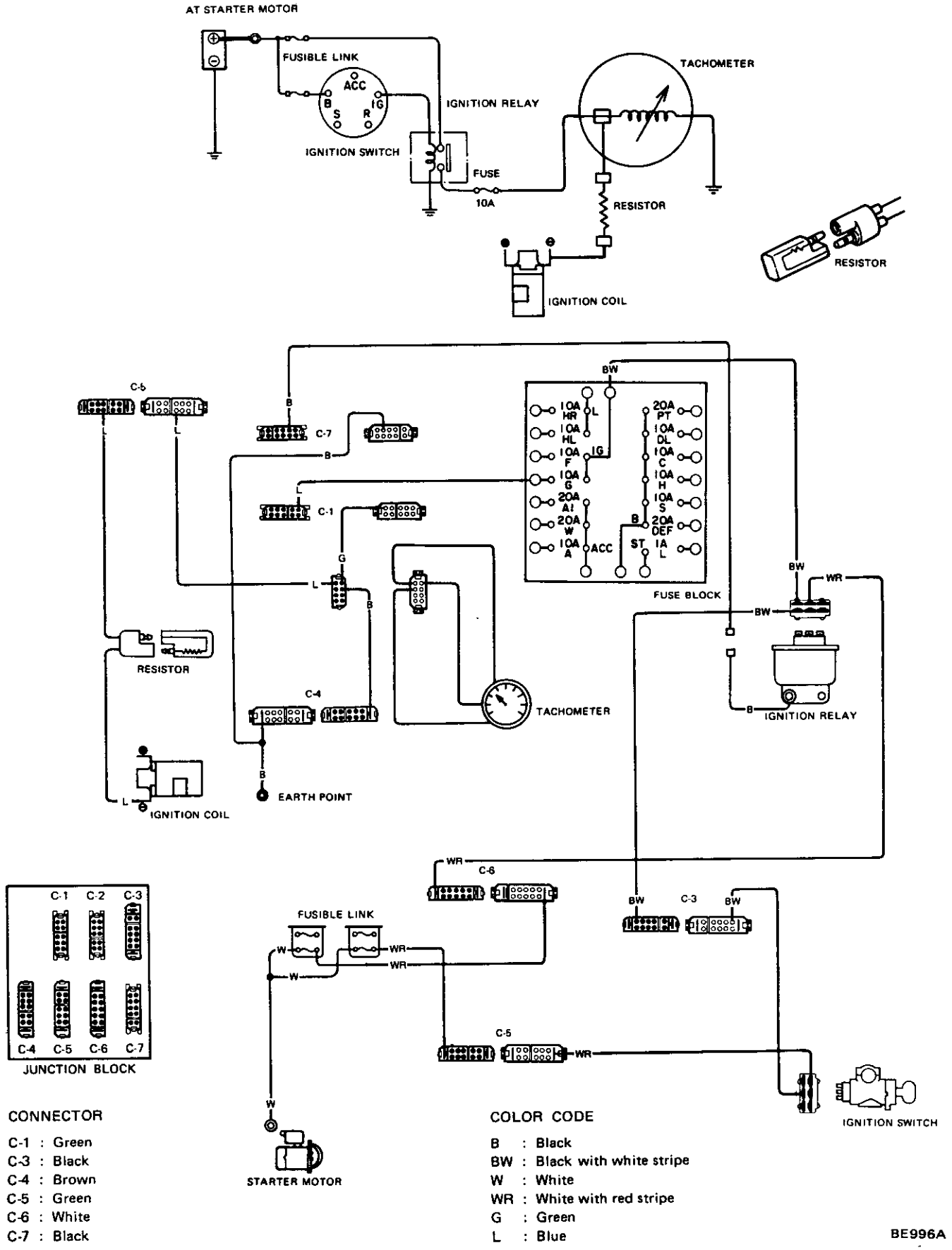

Fig. BE-50 Circuit diagram for tachometer

Water temperature and oil pressure indicating system

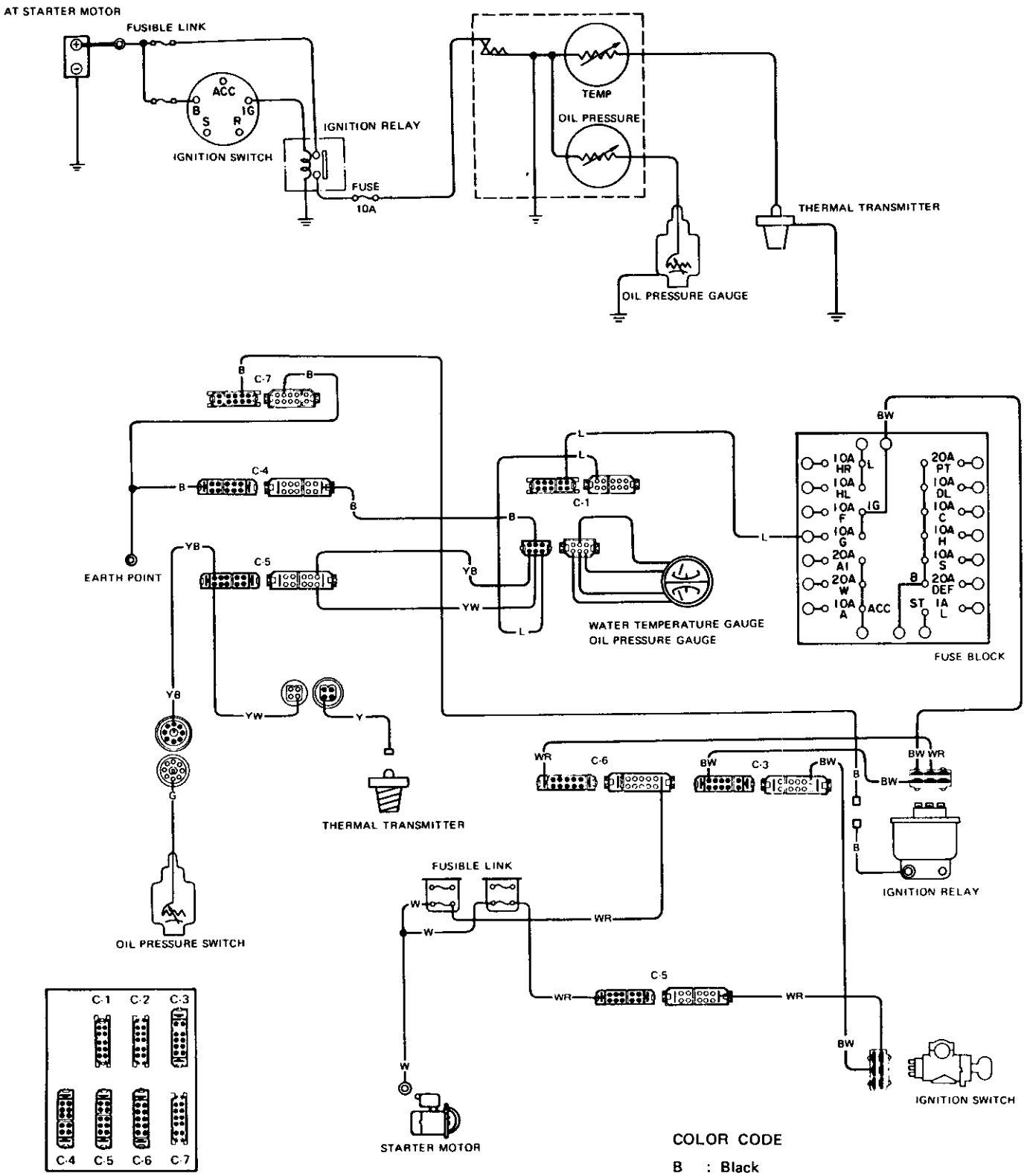

CONNECTOR

C-1 : Green
C-3 : Black
C-4 : Brown
C-5 : Green
C-6 : White

COLOR CODE

B : Black
BW : Black with white stripe
W : White
WR : White with red stripe
G : Green
YB : Yellow with black stripe
YW : Yellow with white stripe
L : Blue

BE997A

Fig. BE-51 Circuit diagram for water temperature and oil pressure

Voltmeter and fuel level indicating and fuel level warning system

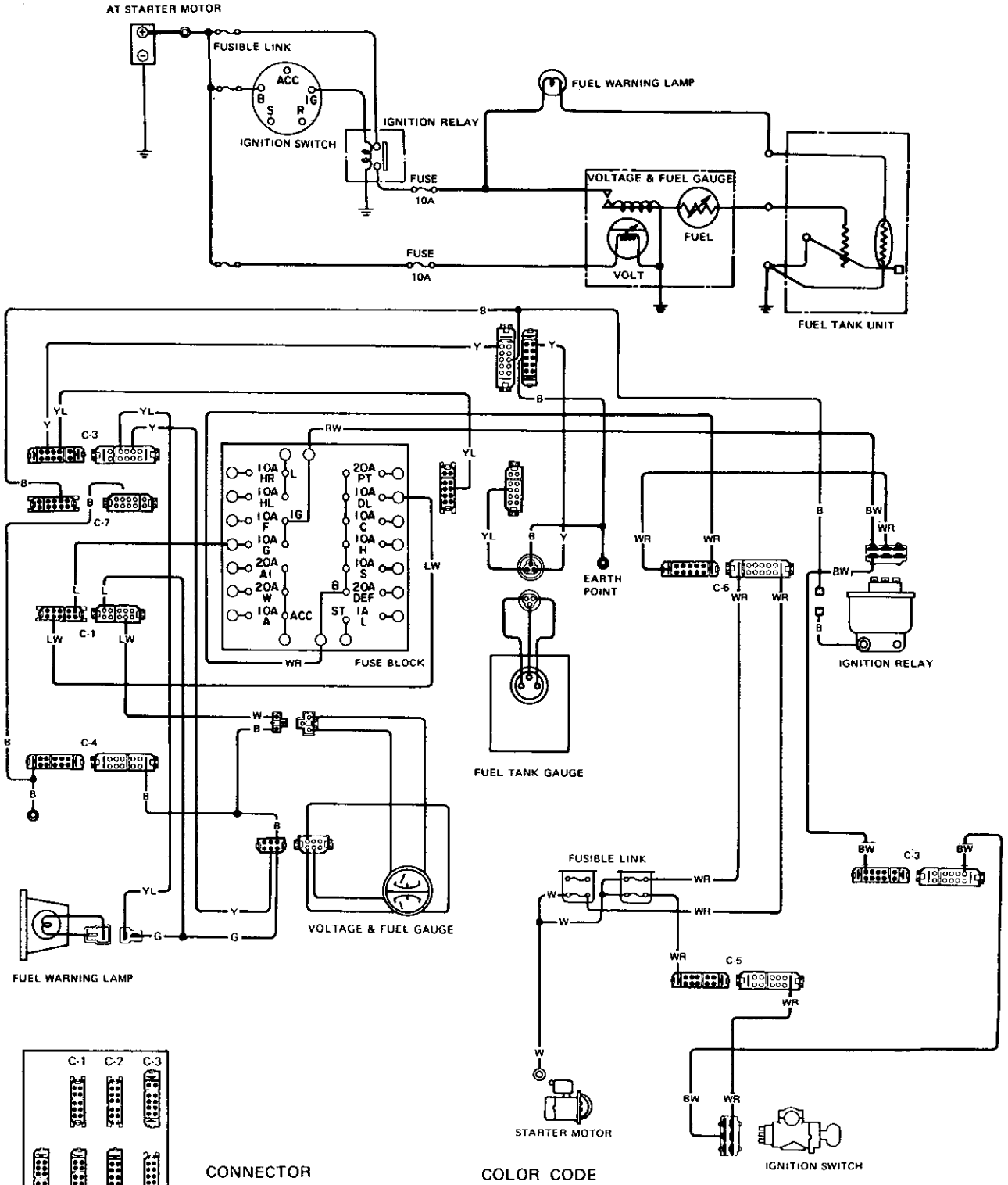

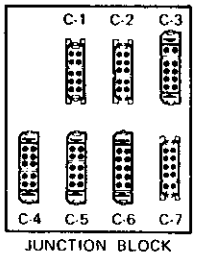

JUNCTION BLOCK

CONNECTOR

C-1 : Green
C-3 : Black
C-4 : Brown
C-5 : Green
C-6 : White
C-7 : Black

COLOR CODE

B : Black
BW : Black with white stripe
W : White
WR : White with red stripe
G : Green
Y : Yellow
YL : Yellow with blue stripe
L : Blue
LW : Blue with white stripe

BE998A

Fig. BE-52 Circuit diagram for voltmeter and fuel level indicating and fuel level warning system

Brake warning system

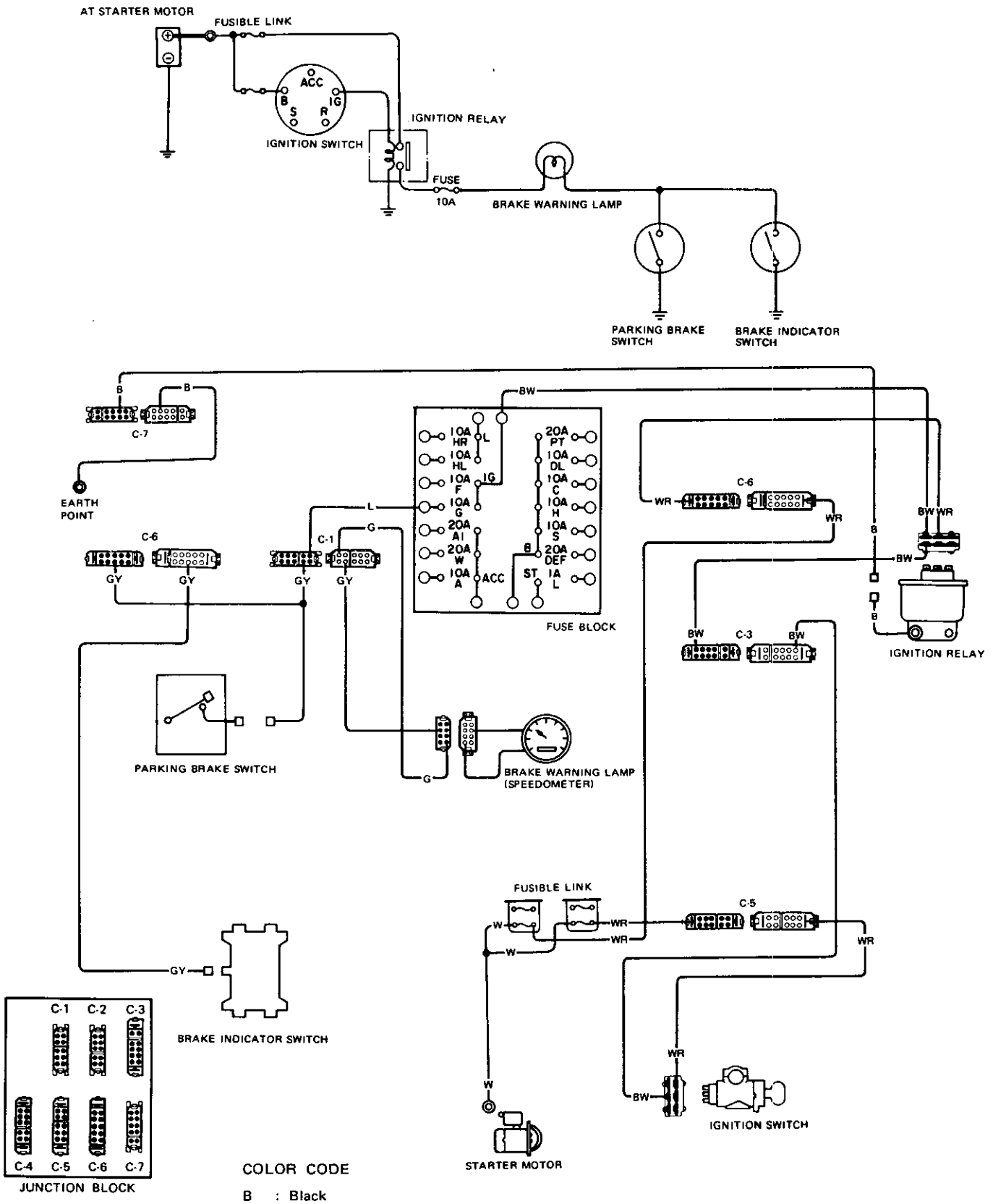

CONNECTOR

C-1 : Green
C-3 : Black
C-5 : Green
C-6 : White
C-7 : Black

COLOR CODE

B : Black
BW : Black with white stripe
W : White
WR : White with red stripe
G : Green
GY : Green with yellow stripe
L : Blue

BE999A

Fig. BE-53 BE-53 Circuit diagram for brake warning system

Brake warning lamp checking system

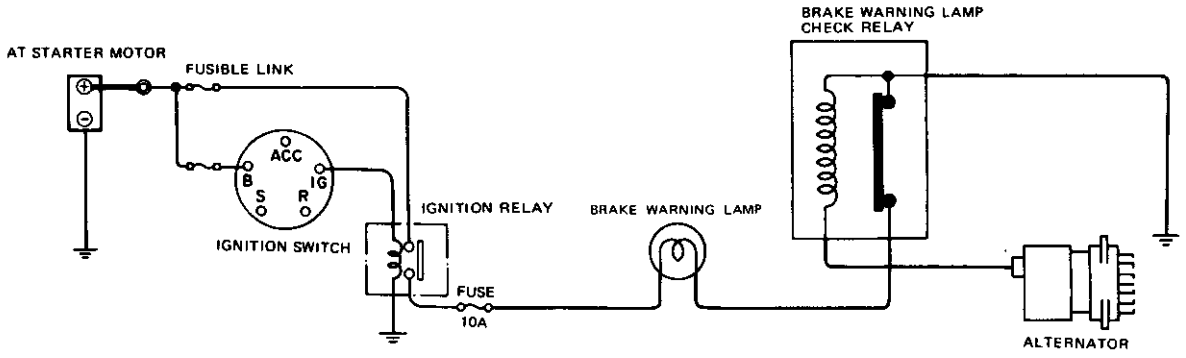

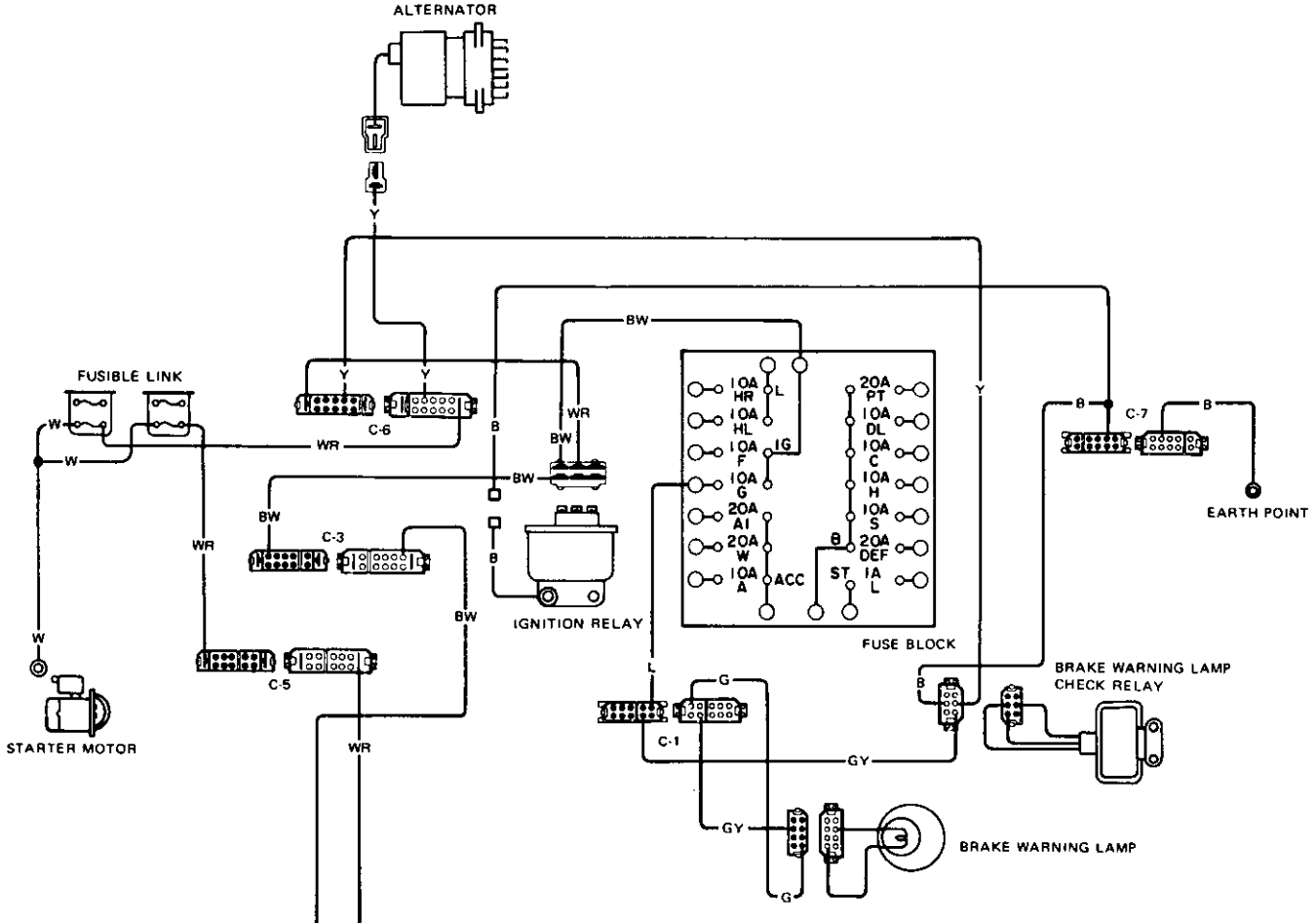

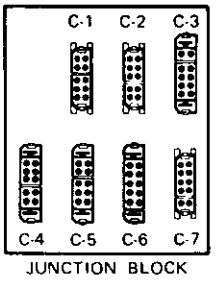

CONNECTOR		COLOR CODE	
C-1	: Green	B	: Black
C-3	: Black	BW	: Black with white stripe
C-5	: Green	W	: White
C-6	: White	WR	: White with red stripe
C-7	: Black	G	: Green
		GY	: Green with yellow stripe
		Y	: Yellow
		L	: Blue

BE001B

Fig. BE-54 Circuit diagram for brake warning lamp checking system

Charge warning lamp system

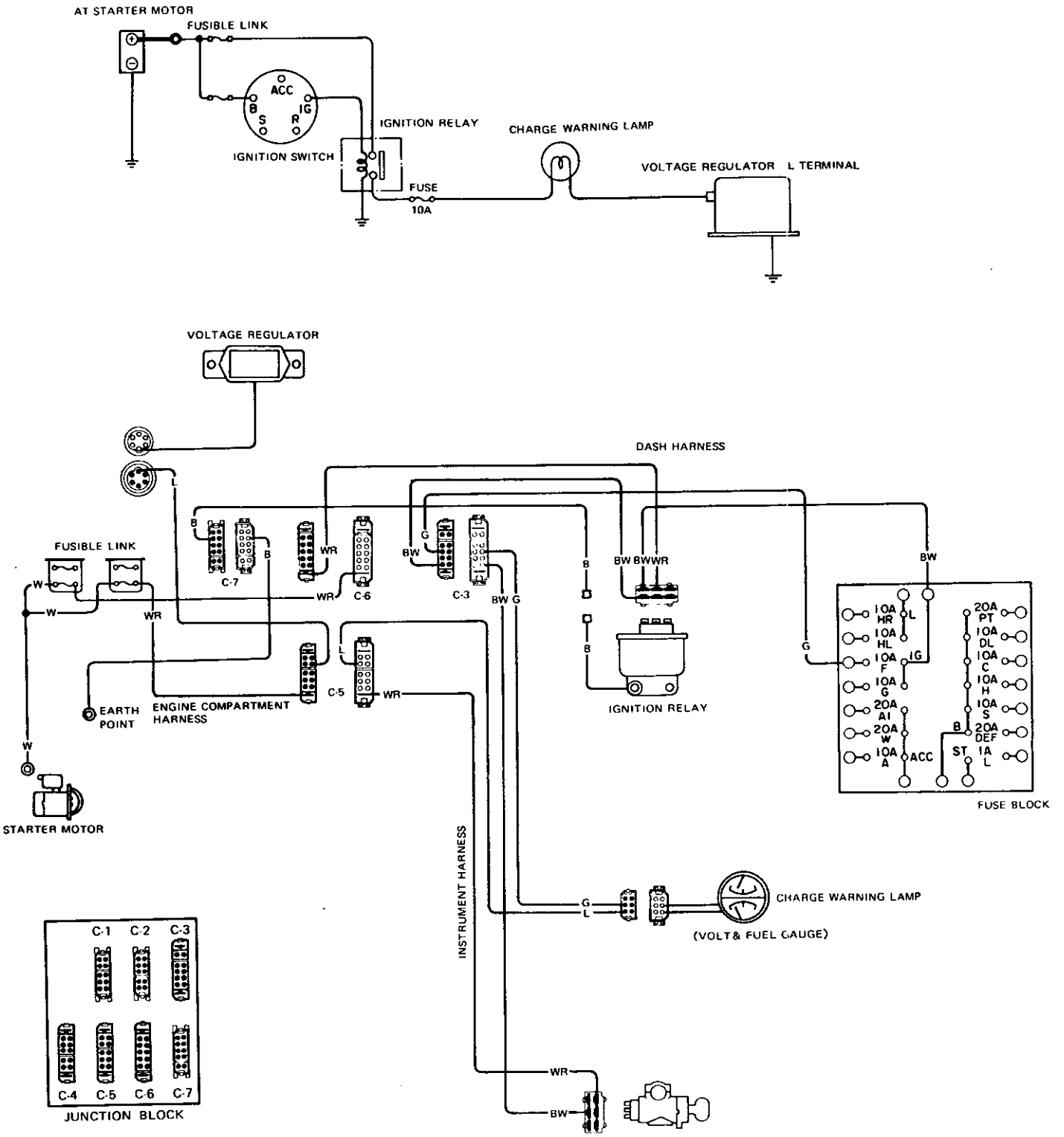

CONNECTOR

C-3 : Black
C-5 : Green
C-6 : White
C-7 : Black

COLOR CODE

B : Black
BW : Black with white stripe
W : White
WR : White with red stripe
G : Green
L : Blue

BE002B

Fig. BE-55 Circuit diagram for charge warning lamp

METER AND GAUGE REPLACEMENT

TACHOMETER

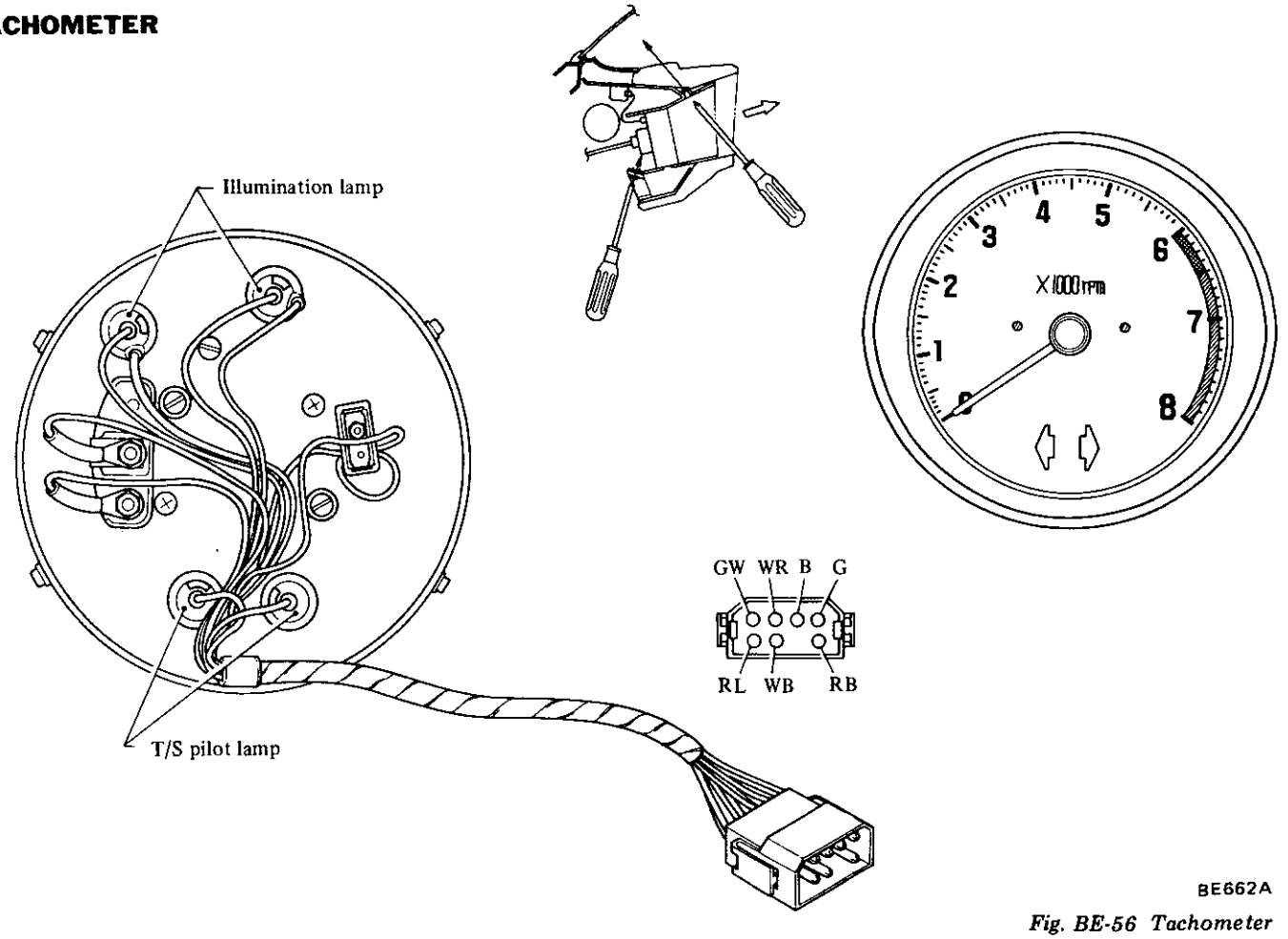

Fig. BE-56 Tachometer

The tachometer is retained by two screws, and can be taken out easily. A pair of turn signal indicator lamps and a pair of illumination lamps are also installed. Their bulbs can be removed easily by twisting socket at back of tachometer.

This tachometer is a voltage trigger type.

Removal and installation

1. Remove screw retaining tachometer at upper side of instrument panel. See following figure.
2. Working from beneath instrument panel, remove the other screw retaining tachometer to bracket of instrument panel.
3. Pulling tachometer assembly out from instrument panel, disconnect connector for instrument harness. Tachometer assembly can then be taken out easily.

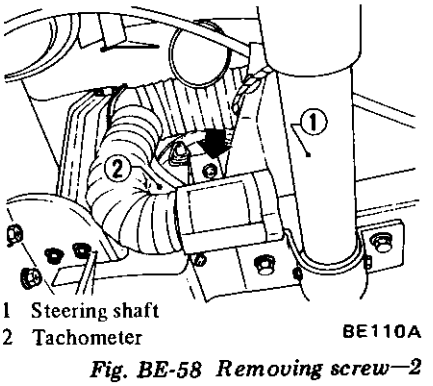

Fig. BE-58 Removing screw—2

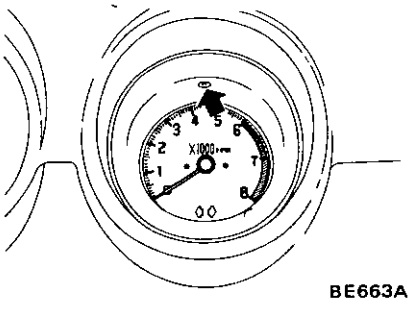

Fig. BE-57 Removing screw—1

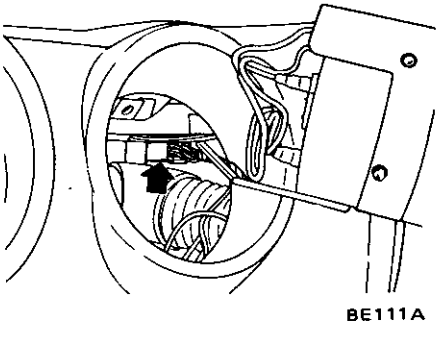

Fig. BE-59 Disconnecting connector

Bulb replacement

Pull out socket, with bulb, from back of tachometer and extract bulb from socket.

Install new bulb in reverse sequence of removal.

Bulb wattage:

Turn signal indicator lamp	3.4W
Illumination lamp	3.4W

SPEEDOMETER

Speedometer is attached by two screws.

High beam indicator lamp, brake warning lamp, an odometer and a tripmeter are integral parts of speedometer. On manual transmission models, a speed switch with amplifier is added.

Consequently, speedometer on manual transmission models is different from that on automatic transmission models. All bulbs on speedometer can be replaced easily.

Removal and installation

1. Remove tachometer as described previously.
2. Disconnect speedometer cable at junction screw on back of meter.
3. Through hole in which tachometer is installed, disconnect trip meter reset cable.

Note: Reset cable can be removed from speedometer by loosening a small screw.

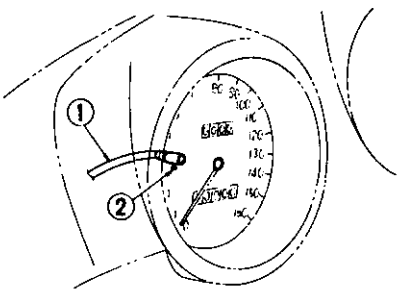

1 Tripmeter reset cable
2 Retaining screw

BE113A

Fig. BE-61 Removing reset cable

4. Remove screw retaining speedometer. See following figure.

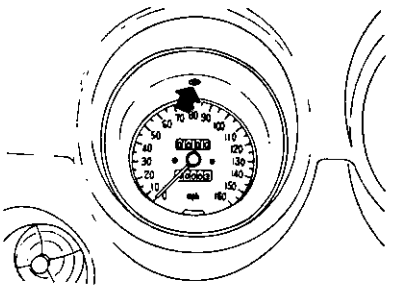

BE114A

Fig. BE-62 Removing screw—1

5. Working from beneath instrument panel, remove other screw retaining tachometer to bracket of instrument panel.

And disconnect lead wire for resistor at a connector.

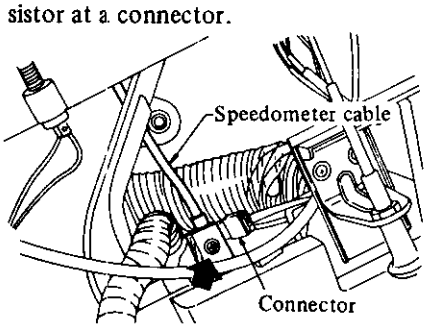

BE100A

Fig. BE-63 Removing screw—2

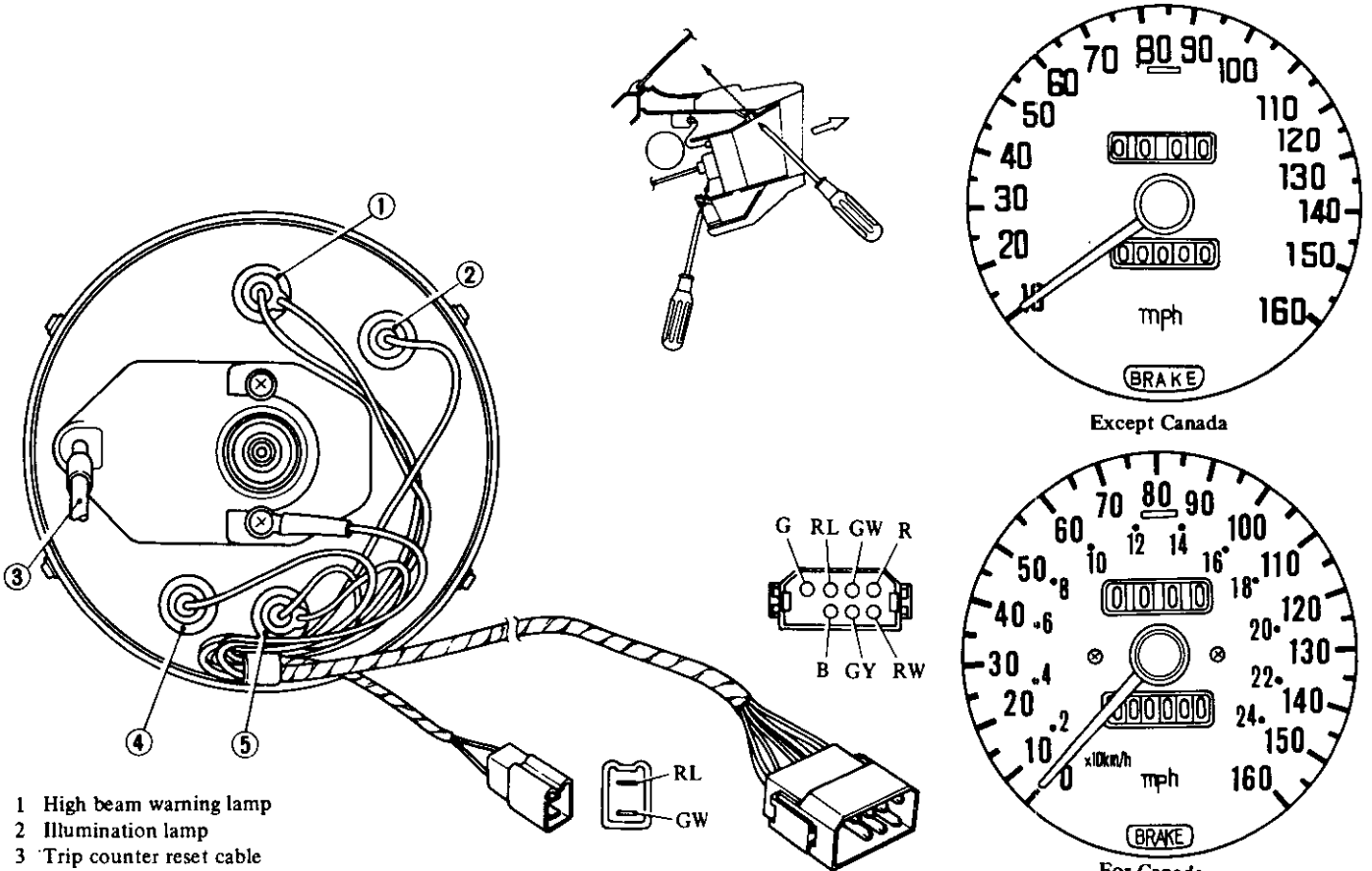

1 High beam warning lamp
2 Illumination lamp
3 Trip counter reset cable
4 Illumination lamp
5 Brake warning lamp

BE003B

Fig. BE-60 Speedometer

6. Pulling speedometer out from instrument harness, disconnect a connector for instrument harness.

Speedometer can then be taken out.

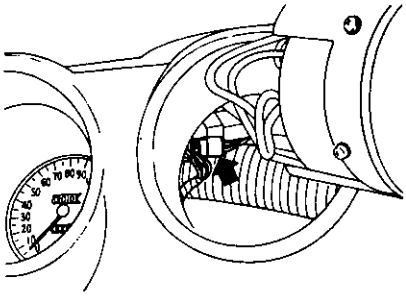

BE115A

Fig. BE-64 Disconnecting connector

Bulb replacement

Pull out socket, with bulb, from back of speedometer and extract bulb from socket.

Install new bulb in reverse sequence of removal.

Bulb wattage:

High beam indicator 3.4W
Brake warning lamp 3.4W

TEMP-OIL AND VOLT-FUEL GAUGES

These gauges are attached to instrument panel with spring bracket. The spring bracket is retained by a screw. Consequently, each gauge can be easily taken out by removing retaining screw.

Removal and Installation

1. Remove four screws retaining instrument finisher to instrument panel. Pulling instrument finisher out a little disconnect two connectors.

Instrument finisher can then be taken out.

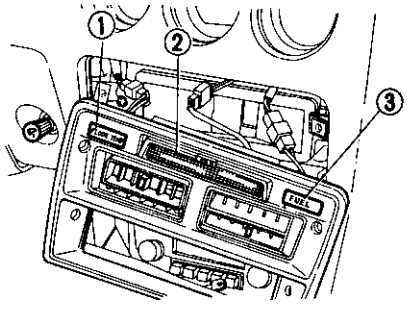

1 Floor temperature warning lamp
2 Map lamp
3 Fuel warning lamp

BE989A

Fig. BE-66 Removing instrument finisher

2. Remove two screws retaining three-way venti-duct to instrument panel and four screw for bracket.

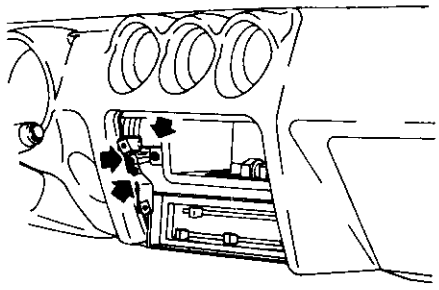

Fig. BE-67 Removing three-way duct retaining screws

3. Disconnect duct hoses from three-way duct and take out three-way duct.

4. Remove screw retaining each gauge to instrument panel.

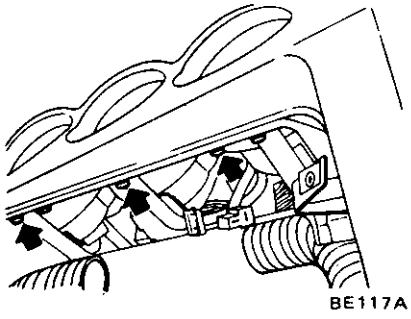

BE117A

Fig. BE-68 Removing gauge retaining screw

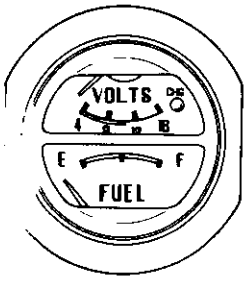

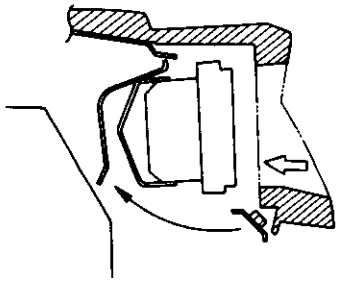

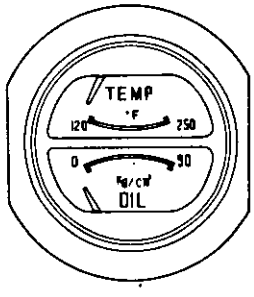

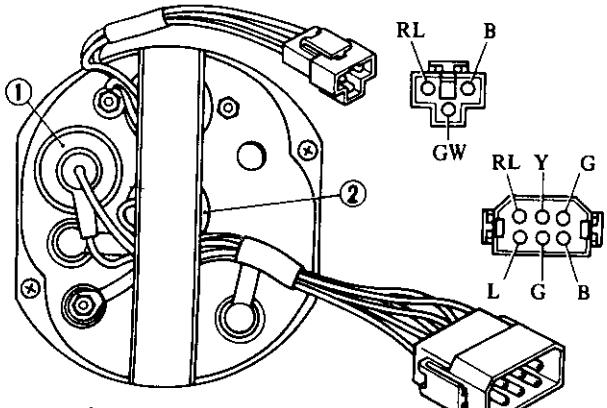

1 Charge warning lamp
2 Illumination lamp

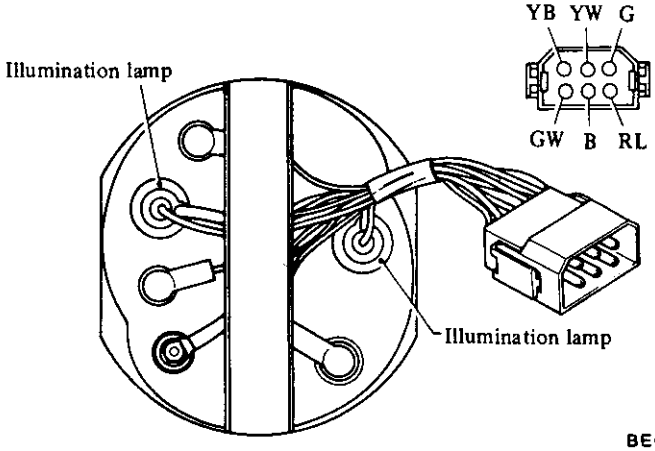

BE004B

Fig. BE-65 TEMP-OIL and VOLT-FUEL gauges

5. Pulling gauge out backward, disconnect each connector. Gauge can then be taken out.

Note: TEMP-OIL gauge has a connector with six terminals. VOLT-FUEL gauge has two connectors: a larger one and a smaller one.

Bulb replacement

Illumination bulb can be taken out easily by pulling socket with bulb at back of each gauge.

Extract bulb from socket and install new bulb in reverse sequence of removal.

Bulb wattage:
Illumination bulb 3.4W

OIL PRESSURE AND WATER TEMPERATURE INDICATING SYSTEM

DESCRIPTION

The oil pressure gauge consists of a bimetal meter unit, a variable resistance sensing unit (incorporating a diaphragm) and a voltage regulator.

As oil pressure varies, the diaphragm moves accordingly, causing the sliding contact to move along the resistance. This changes the amount of current that can flow in the circuit and actuates the bimetal.

The water temperature gauge consists of a meter and thermal transmitter located in the engine block. The thermal transmitter is equipped with a thermistor element which converts cooling water temperature variation to a resistance, thereby controlling current flowing to the gauge.

The oil pressure gauge and water temperature gauge are equipped with a bimetal arm and heater coil.

When the ignition switch is set to "ON", current flows to the heater coil, and the heater coil is heated. With this heat, the bimetal arm is bent, thus causing the pointer connected to the bimetal arm to move. The characteristics of both gauges are the same.

If both the oil pressure and water temperature gauges become faulty at the same time, the fault may lie in the voltage regulator.

REPLACEMENT

OIL-TEMP gauge

Refer to previous section "Meter and Gauge Replacement".

Oil pressore gauge unit

The oil pressure gauge unit is located on cylinder block beside oil element. The switch can be removed by unscrewing it. Be sure to apply conductive sealer to threads prior to installing new unit.

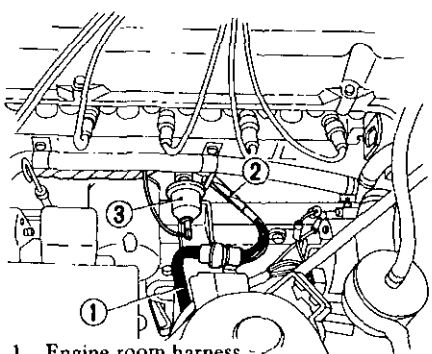

1 Engine room harness
2 Engine harness No. 2
3 Oil pressure sensor

Fig. BE-69 Oil pressure gauge unit

Thermal transmitter

To replace thermal transmitter, disconnect lead wire from its terminal and unscrew thermal transmitter from oil filter bracket.

Be sure to apply conductive sealer to threads prior to installing new thermal transmitter.

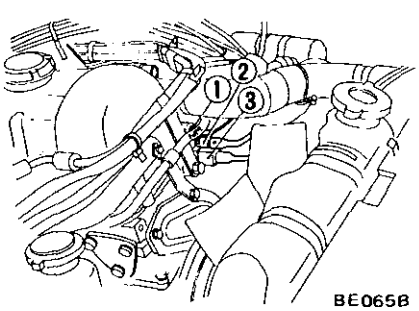

1 Thermal transmitter
2 Water temperature sensor (For Electronic Fuel Injection System)
3 Thermotime switch (For Electronic Fuel Injection System)

Fig. BE-70 Thermal transmitter

INSPECTION

Check each unit for proper operation.

Test continuity of oil pressure and water temperature indicating system with test lamp or ohmmeter. See Figure BE-51.

VOLTMETER AND FUEL LEVEL INDICATING SYSTEM

DESCRIPTION

The fuel level indicating system consists of a tank unit and a fuel level gauge. The tank unit consists of a float which moves up and down in the fuel tank with changes in fuel level, and a sliding contact that slides back and forth on a resistance when the float moves. This changes the amount of electric resistance offered by the tank unit and controls the current flowing to the fuel level gauge. The gauge moves with the changes in current flow.

The fuel gauge is equipped with a bimetal arm and heat coil. When the ignition switch is turned "ON", current flows to the heater coil, and the heater coil is heated. With this heat, the bimetal arm is bent, thus causing the pointer connected to the bimetal arm to move.

The voltmeter monitors the condition of electrical system and battery. It is in good order if it registers more than 11 volts before and during engine starting, and 6 to 8 volts during engine cranking. If it registers more than 15.5 volts during engine running, voltage regulator is out of order.

REPLACEMENT

VOLT-FUEL gauge

Refer to previous section Meter and Gauge Replacement.

Fuel tank gauge unit

Refer to Section FE (Fuel and Exhaust system) for Replacement.

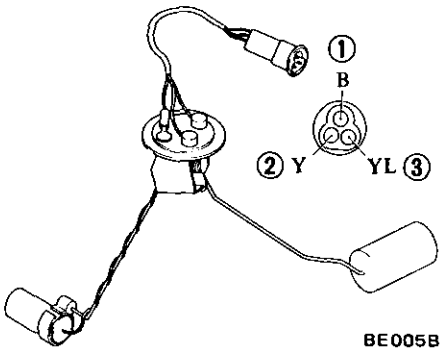

Fig. BE-71 Fuel tank gauge unit

Fuel warning lamp bulb

1. Remove four screws retaining instrument finisher to instrument panel.
2. Pull instrument finisher forward slightly, and disconnect lead wires at three connectors. Instrument finisher can then be removed from instrument panel.

Note: Three connectors are for map lamp, floor temperature warning lamp (California models) and fuel warning lamp.

3. Pull out socket and bulb from back of lamp body and extract bulb from socket.
4. Install new bulb. Installation is in the reverse sequence of removal.

Bulb wattage:
Fuel warning lamp 3.4W

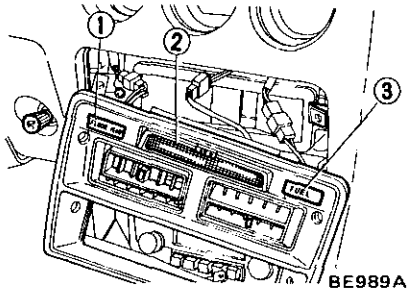

1 Floor temperature warning lamp
2 Map lamp
3 Fuel warning lamp

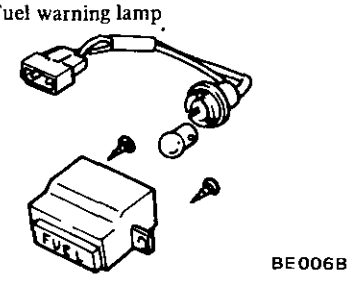

Fig. BE-72 Fuel warning lamp

Lamp body

1. Remove four screws retaining instrument finisher to instrument panel.
2. Pull instrument finisher forward slightly, and disconnect lead wires at connectors. Instrument finisher can then be removed from instrument panel.

Note: Three connectors are for map lamp, floor temperature warning lamp (California models) and fuel warning lamp.

3. Remove two screws retaining warning lamp body to instrument finisher. Lamp body can then be taken out.
4. Installation is in the reverse sequence of removal.

INSPECTION

Test continuity of voltmeter and fuel level indicating system with test lamp or ohmmeter. See Figure BE-52.

CHARGE WARNING SYSTEM

DESCRIPTION

The charge warning system consists primarily of a charge warning lamp and a voltage regulator.

The charge warning lamp glows when the ignition switch is turned "ON" with the engine shut down, or when alternator fails to charge when engine is operating.

When the ignition switch is turned "ON", charge warning circuit is closed and current flows from the ignition relay to the warning lamp and grounds through the regulator. When the engine is started and the alternator comes into operation, the alternator output current (N) opposes the current flowing from the warning lamp; as the current (N) increases, the solenoid is energized and the warning lamp relay contacts are opened—in effect it breaking the warning circuit ground connection—and the lamp goes out.

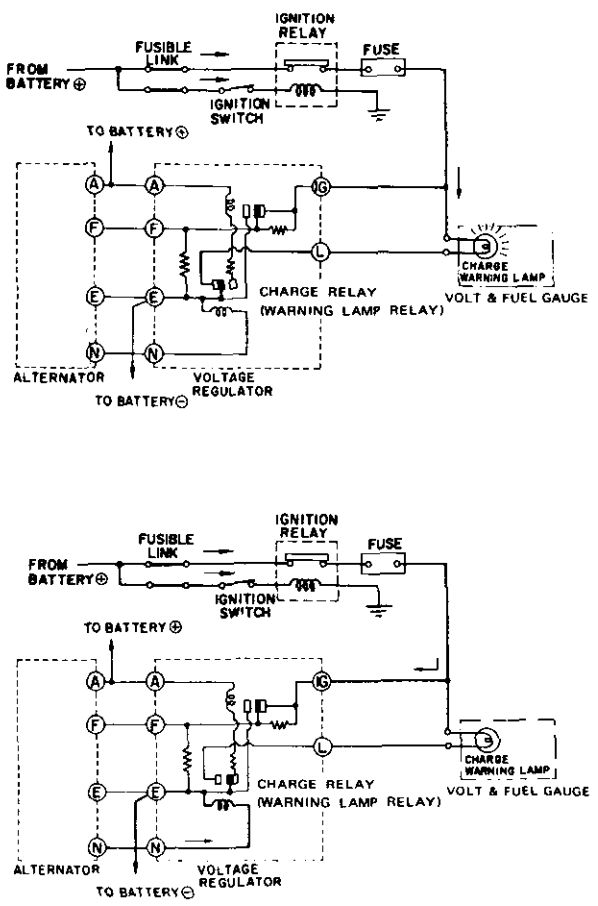

Fig. BE-73 Voltage regulator and associated circuits

REPLACEMENT

Charge warning lamp bulb

The charge warning lamp is built into the voltmeter.

1. Remove four screws retaining instrument finisher to instrument panel.
2. Pull instrument finisher forward slightly and disconnect lead wires at three connectors. Instrument finisher can then be removed from instrument panel.

Note: Three connectors are for map lamp, floor temperature warning lamp (California models) and fuel warning lamp.

3. Pull out socket and bulb from back of voltmeter and extract bulb from socket.
4. Install new bulb. Installation is in the reverse sequence of removal.

Bulb wattage:
Charge warning lamp 3.4W

Voltage regulator

The voltage regulator is installed on the relay bracket in the engine compartment.

1. Disconnect battery ground cable.
2. Remove four screws attaching relay bracket to hoodledge panel and remove relay bracket.
3. Remove two screws retaining voltage regulator assembly to relay bracket. Voltage regulator can then be taken out.
4. Disconnect lead wires from voltage regulator at connector.

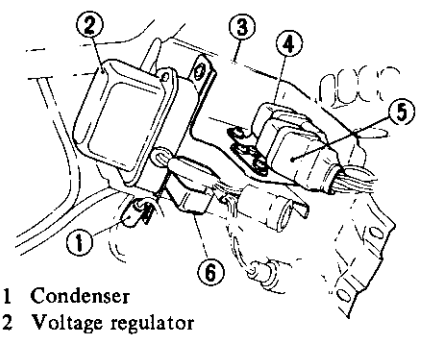

1 Condenser
2 Voltage regulator
3 Relay bracket
4 Water temperature relay (Advance control relay)
5 Seat belt relay (Starter relay) (A/T only)
6 Air conditioner relay (Compressor relay)

BE976A

Fig. BE-74 Removing voltage regulator

INSPECTION

Remove two screws retaining cover to voltage regulator body and take out cover. Connect voltage regulator lead wires to engine room harness at connector.

Check for operation of charge relay indicated in following figure.

- When engine is stopped
  → Contact points must be closed.
- While engine is running
  → Contact points must be opened.

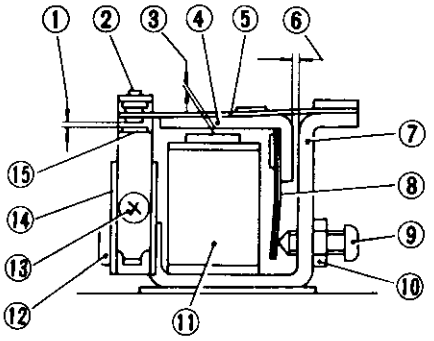

BE008B

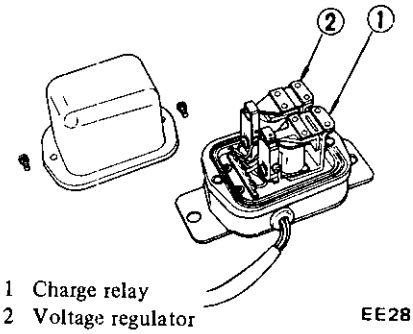

1 Charge relay
2 Voltage regulator

EE285

1 Point gap
2 Charge relay contact
3 Core gap
4 Armature
5 Connecting spring
6 Yoke gap
7 Yoke
8 Adjusting spring
9 Adjusting screw
10 Lock nut
11 Coil
12 4 mm (0.157 in) dia. screw
13 3 mm (0.118 in) dia. screw
14 Contact set
15 Voltage regulator contacts

Fig. BE-75 Voltage regulator

BRAKE WARNING SYSTEM

DESCRIPTION

The brake warning system consists of a warning lamp, a parking brake switch and a brake line pressure differential warning switch. The whole circuit is shown in Figure BE-53.

The brake warning lamp comes on when the parking brake is applied.

When the ignition switch is set to "ON", the ignition relay contacts are closed and current flows from the ignition relay to the warning lamp. When the parking brake is applied, parking brake warning switch is closed and warning lamp comes on.

The brake line pressure differential warning switch causes warning lamp to come on when problem occurs in brake lines. For information on brake line pressure differential warning switch, refer to Section BR for Warning Switch.

The warning lamp also comes on when the ignition switch is turned "ON" with the engine shut down, permitting inspection of the lamp condition.

The brake warning lamp checking system consists of a warning lamp, a check relay and an alternator. The whole circuit is shown in Figure BE-54.

When the ignition switch is turned "ON", the ignition relay contacts are closed and current flows from the ignition relay to the warning lamp. When the engine is shut down, the brake warning lamp check relay contacts are closed and warning lamp comes on.

When the engine is started, current from terminal N of the alternator flows through the winding of the check relay, causing relay contacts to open. The lamp will go out when the parking brake is released and the brake line pressure differential warning switch is in "OFF".

REPLACEMENT

Parking brake switch

The parking brake switch is mounted on parking brake stem support bracket on lever support bracket.

To replace parking brake switch, disconnect lead wire at connector plug and pull switch assembly out of bracket.

When plunger is pressed into switch assembly, parking brake switch contacts are open. Contacts are closed when plunger is projected.

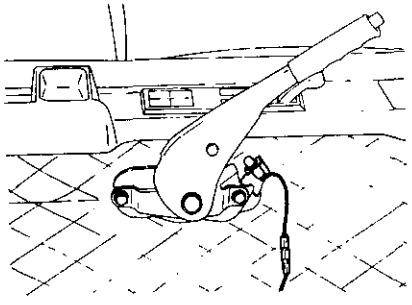

BE122A

Fig. BE-76 Parking brake switch

Brake line pressure differential warning switch

The warning switch is located at left side of engine compartment. To replace warning switch, remove brake tubes and disconnect a lead wire at connector.

Then, remove a retaining bolt.

Installation is in the reverse sequence of removal.

Note: In installing warning switch, refer to Section BR for instructions.

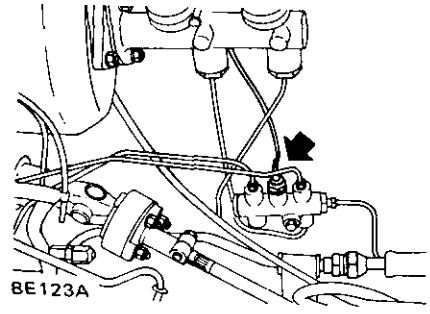

BE123A

Fig. BE-77 Brake warning switch

Brake warning lamp check relay

The relay is attached to the floor under the front passenger seat.

1. Disconnect battery ground cable.
2. Remove four bolts securing front passenger seat in place, and remove seat.
3. Disconnect lead wires from relay at connector.
4. Remove two screws retaining relay. Relay can then be taken out.
5. Installation is in the reverse sequence of removal.

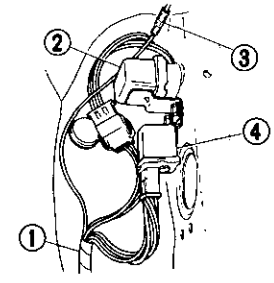

1 Dash harness
2 Brake warning lamp check relay
3 To parking brake switch
4 Floor temperature relay

BE973A

Fig. BE-78

INSPECTION

Check each switch for proper operation and test continuity of wiring system with ohmmeter or test lamp. Take care that each connection is correctly secured.

TROUBLE DIAGNOSES AND CORRECTIONS

SPEEDOMETER

Condition	Probable cause	Corrective action
Speedometer pointer and odometer do not operate.	Loose speedometer cable union nut.	Retighten.
	Broken speedometer cable.	Replace.
	Damaged speedometer drive pinion gear (Transmission side).	Replace.
	Faulty speedometer.	Replace.
Unstable speedometer pointer.	Improperly tightened or loose speedometer cable union nut.	Retighten.
	Faulty speedometer cable.	Replace.
	Faulty speedometer.	Replace.
Unusual sound occurs in when driving speed is increased.	Excessively bent or twisted speedometer cable inner wire or lack of lubrication.	Replace or lubricate.
	Faulty speedometer.	Replace.

Condition	Probable cause	Corrective action
Inaccurate speedometer indication.	Faulty speedometer.	Replace.
Inaccurate odometer operation.	Improperly meshed second and third gear or worn gears.	Replace speedometer.
	Faulty feeding due to deformed odometer and pinion carrier.	Replace speedometer.

WATER TEMPERATURE AND OIL PRESSURE GAUGES

Condition	Probable cause	Corrective action
Both water temperature and oil pressure gauges do not operate.	Burnt fuse.	Correct cause and replace fuse.
	Faulty ignition relay.	Check for operation of circuits (i.e., fuel gauge and turn signal lamp) electrically connected to ignition relay. If they do not function, replace ignition relay.
	Faulty gauge voltage regulator.	Replace water temperature gauge.
Both water temperature and oil pressure gauges indicate inaccurately.	Faulty gauge voltage regulator (Gauge pointer fluctuates excessively).	Replace water temperature gauge.
	Loose or poor connection (Gauge pointer fluctuates slightly).	Correct connector contact.
Water temperature gauge Water temperature gauge does not operate.	Faulty thermal transmitter or loose terminal connection. (When thermal transmitter yellow/white wire is grounded, gauge pointer fluctuates.)	Replace thermal transmitter or correct terminal connection.
	Faulty water temperature gauge.	Replace water temperature gauge.
	Open circuit.	
Gauge indicates only maximum temperature.	Faulty thermal transmitter. (Gauge pointer returns to original position when ignition switch is turned off.)	Replace thermal transmitter.
	Faulty water temperature gauge. (Gauge pointer indicates maximum temperature even after ignition switch is turned off.)	Replace water temperature gauge.
Water temperature gauge does not operate accurately.	Faulty water temperature gauge.	[Connect a 116Ω resistance between thermal transmitter yellow/white wire and ground. When gauge indicates approximately 50°C (122°F), gauge is serviceable].
	Loose or poor connection.	Correct connector terminal contact.
Oil pressure gauge Oil pressure gauge does not operate.	Faulty oil pressure gauge unit or loose terminal connection.	Replace gauge unit or correct terminal connection.
	Open circuit.	Repair or replace.

Condition	Probable cause	Corrective action
Gauge indicates only maximum pressure.	Faulty oil pressure gauge unit. (Gauge pointer returns to original position when ignition switch is turned off.)	Replace.
	Faulty oil pressure gauge. (Gauge pointer indicates maximum pressure even after ignition switch is turned off.)	Replace.

FUEL GAUGE

Condition	Probable cause	Corrective action
Fuel gauge does not operate.	Burnt fuse.	Correct cause and replace fuse.
	Faulty ignition relay.	Check for operation of circuits (i.e., water temperature, oil pressure gauge and turn signal lamp) electrically connected to ignition relay. If they do not function, replace ignition relay.
	Faulty tank unit or loose unit terminal connection. (Pointer deflects when tank unit yellow wire is grounded.)	Replace tank unit or correct terminal connection.
	Faulty fuel gauge.	Replace fuel gauge.
	Open circuit.	
Pointer indicates only "F" position.	Faulty tank unit. (Pointer drops below "E" mark when ignition switch is turned off.)	Replace tank unit.
	Faulty fuel gauge. (Pointer still indicates "F" position when ignition switch is turned off.)	Replace fuel gauge.
Fuel gauge does not operate accurately.	Faulty tank unit. (Pointer indicates a half level when a 32Ω resistor is connected between tank unit yellow wire and ground.)	Replace tank unit.
	Faulty fuel gauge.	Replace fuel gauge.
	Poor or loose connection.	Correct connector terminal contact.

ELECTRICAL ACCESSORY

CONTENTS

HEATER BE-48
DESCRIPTION BE-48
AIR FLOW BE-49
REMOVAL AND INSTALLATION BE-51
DISASSEMBLY AND ASSEMBLY BE-53
HEATER ILLUMINATION BULB REPLACEMENT BE-54
ADJUSTMENT BE-54
INSPECTION BE-55
TROUBLE DIAGNOSES AND CORRECTIONS BE-58
HORN BE-59
DESCRIPTION BE-59
REMOVAL AND INSTALLATION BE-59
INSPECTION BE-59
TROUBLE DIAGNOSES AND CORRECTIONS BE-60
WINDSHIELD WIPER AND WASHER BE-62
DESCRIPTION BE-62
ADJUSTMENT BE-63
REMOVAL AND INSTALLATION BE-63
INSPECTION BE-64
TROUBLE DIAGNOSES AND CORRECTIONS BE-65
CIGARETTE LIGHTER BE-71
DESCRIPTION BE-71
ILLUMINATION BULB REPLACEMENT BE-71
REMOVAL AND INSTALLATION BE-71
INSPECTION BE-71
CLOCK BE-72
DESCRIPTION BE-72
REPLACEMENT BE-72
INSPECTION BE-72
ELECTRIC REAR WINDOW DEFOGGER BE-73
DESCRIPTION BE-73
REMOVAL AND INSTALLATION BE-73
WARNING LAMP BULB REPLACEMENT BE-74
INSPECTION BE-74
FILAMENT MAINTENANCE BE-75
RADIO BE-77
DESCRIPTION BE-77
REMOVAL AND INSTALLATION BE-77
ANTENNA TRIMMER ADJUSTMENT BE-78
INSPECTION BE-78
TROUBLE DIAGNOSES AND CORRECTIONS BE-79
THEFT PROTECTION SYSTEM BE-81
DESCRIPTION BE-81
REMOVAL AND INSTALLATION BE-81
INSPECTION BE-82
SEAT BELT WARNING SYSTEM BE-84
DESCRIPTION BE-84
REMOVAL AND INSTALLATION BE-84
WARNING LAMP BULB REPLACEMENT BE-85
INSPECTION BE-85
KICKDOWN SYSTEM (For automatic transmission models only) BE-88
DESCRIPTION BE-88
REPLACEMENT BE-88
INSPECTION BE-88
STARTING SYSTEM (For automatic transmission models only) BE-90
DESCRIPTION BE-90
REPLACEMENT BE-90
INSPECTION BE-90

HEATER

DESCRIPTION

The heater unit combines heating and ventilating functions. It is located in the lower part of the instrument panel, to the front of the center console.

Outside air enters the cowl top grille by the blower through the air intake case. As air is passed through the heater core, heat is picked up from the core. When the air is not passed through the core, the heater unit serves as a ventilating unit.

The heater electrical system consists of fan motor, ignition relay, control illumination lamp, resistor and fan switch.

The fan switch controls the three speed fan motor through a resistor located in the fan unit.

A heater control illumination lamp is located behind the control finisher; its brightness is controlled by an illumination control resistor. Ventilation air duct hoses are installed behind the instrument panel.

AIR FLOW

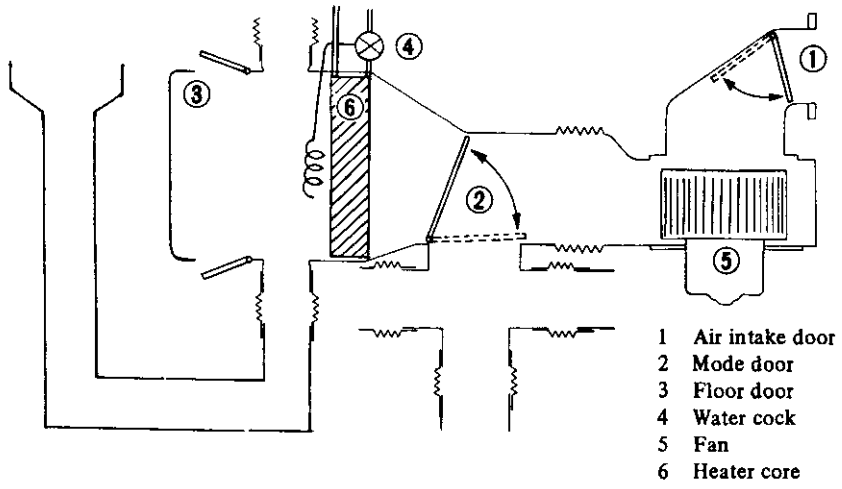

Fig. BE-79 Sectional view of heater

Air intake door

The air intake door controls the flow of outside air into the heater unit. Outside air is drawn from the cowl top grille. This door is controlled by AIR lever on heater control.

Mode door

The mode door controls air flowing through heater core and directs fresh cool air flowing from center ventilator and instrument side ventilator. This door is controlled by AIR lever.

Floor door

The floor door controls air flow discharged from heater unit. When the door is open, air is discharged to floor area with a small amount going to the defroster nozzle. When the door is closed, all air is discharged through the defroster nozzle.

AIR lever

The AIR lever controls air flow with the aid of air intake door, mode door and floor door. These three doors can be controlled with a lever. When the AIR lever is set in the VENT position, all air from the blower is discharged through the center and side vents. When the AIR lever is in the HEAT position, all air passes through the heater core and flows to the DEF nozzle and floor area.

TEMP lever

The TEMP lever controls the water cock. The water cock controls the water flowing into heater core and temperature of discharged air.

This heater cock, a flow control type, adequately controls the temperature of the discharged air according to the position of the TEMP lever.

FAN lever

The FAN lever controls fan motor with aid of a resistor located in fan unit. The fan motor controls amount of discharged air.

Ventilating

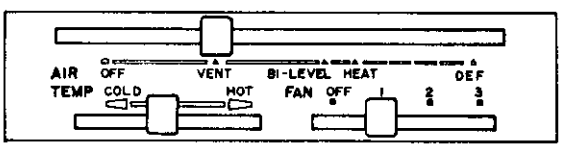

AIR lever is in VENT position. TEMP lever is in any position. Amount of discharged air is controlled by FAN lever. During high speed driving, FAN lever may be useless.

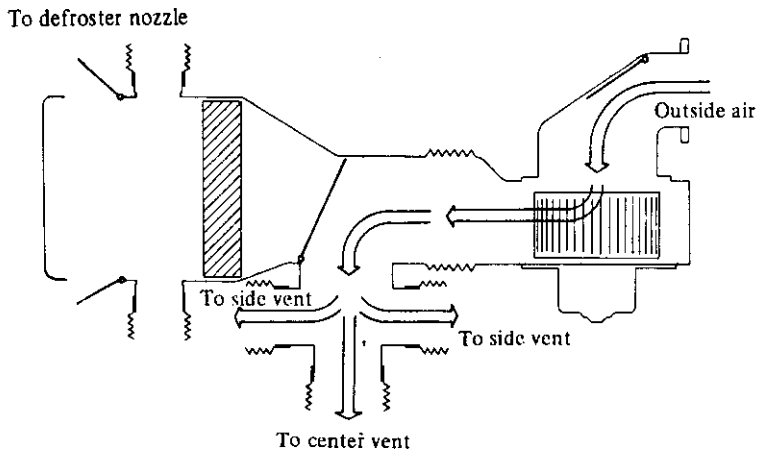

BI-LEVEL

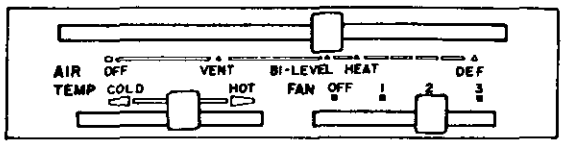

AIR lever is in BI-LEVEL position. TEMP lever controls the temperature of heat air discharged to floor or defroster nozzle. FAN lever controls amount of air discharged.

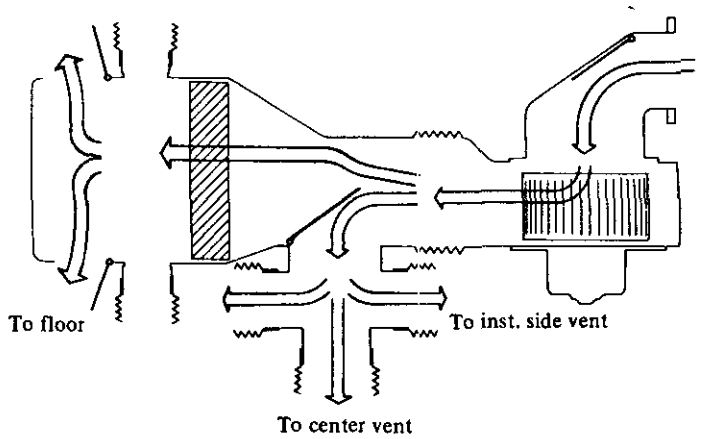

Heating

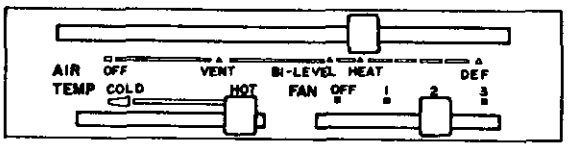

AIR lever is in HEAT position. TEMP lever controls temperature of discharged air.

FAN lever controls amount of air discharged.

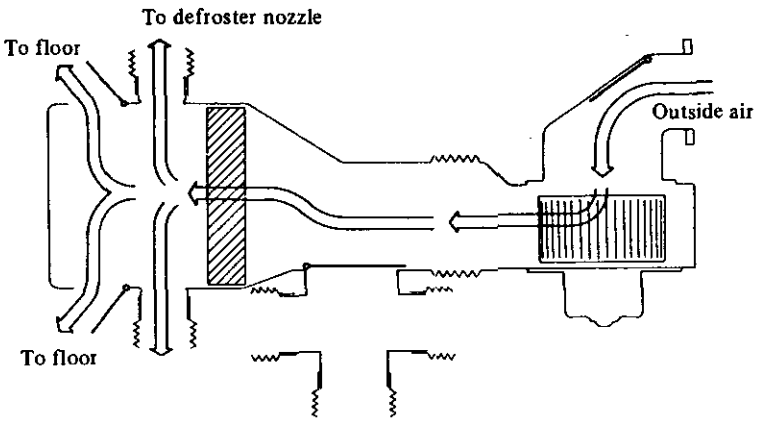

Defrosting

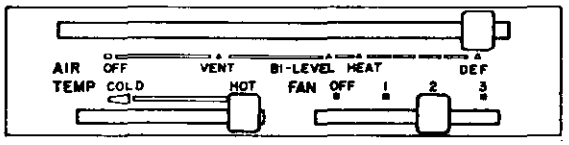

AIR lever is in DEF position. TEMP lever controls the temperature of discharged air.

FAN lever controls amount of air discharged.

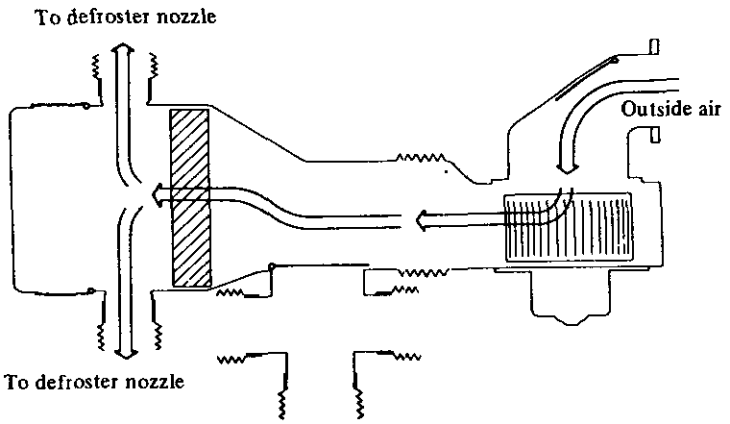

Not in use

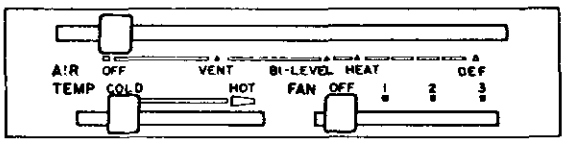

AIR lever is in OFF position.
TEMP lever is in COLD position.
FAN lever is in OFF position.

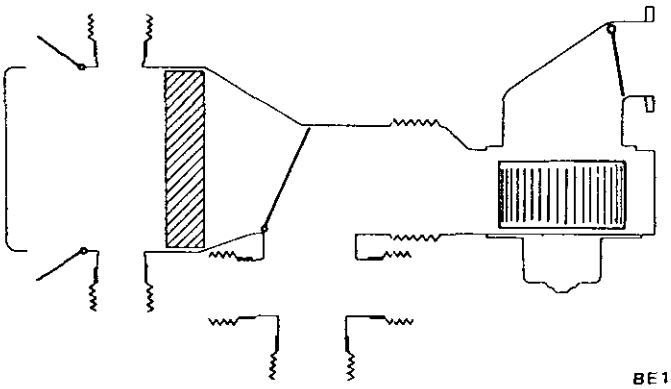

BE125A

Fig. BE-80 Air flow

REMOVAL AND INSTALLATION

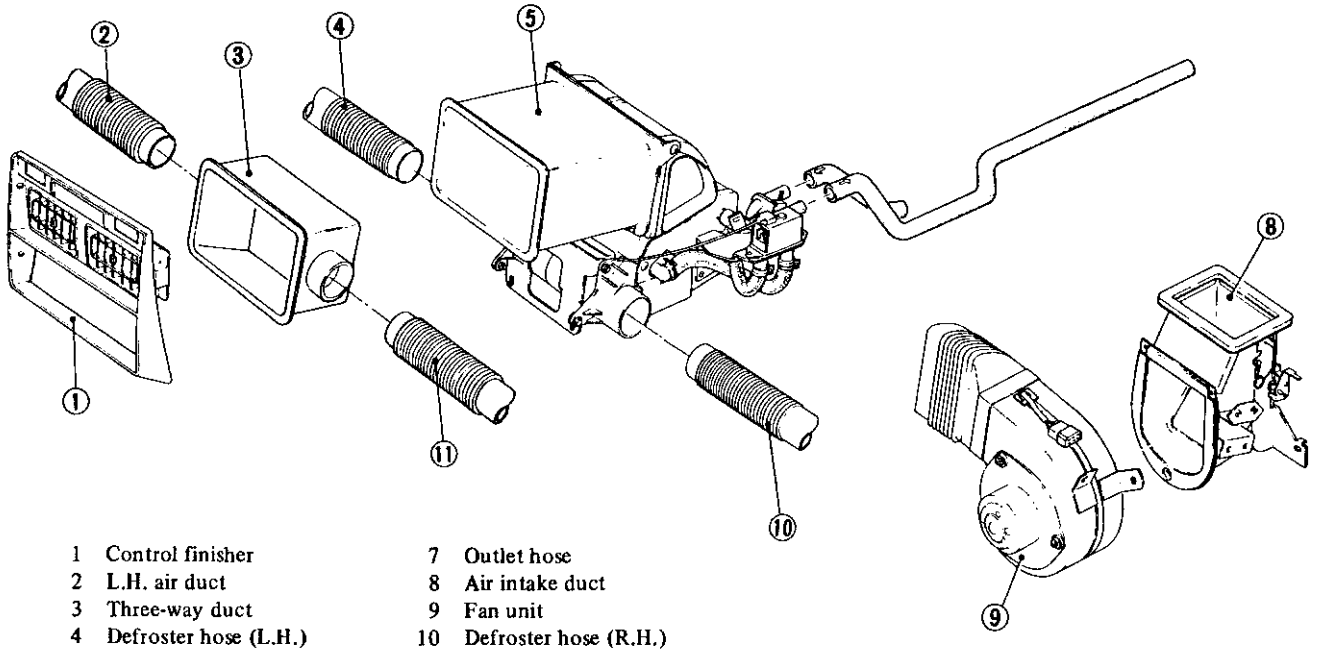

1 Control finisher
2 L.H. air duct
3 Three-way duct
4 Defroster hose (L.H.)
5 Heater unit
6 Inlet hose
7 Outlet hose
8 Air intake duct
9 Fan unit
10 Defroster hose (R.H.)
11 R.H. air duct

BE010B

Fig. BE-81 Exploded view of heater

Heater control

1. Disconnect battery ground cable and drain engine coolant.
2. Remove console box, referring to Section BF.
3. Remove four screws retaining finisher and take out by moving forward. Disconnect lead wires at two (three for California models) connectors and finisher can then be taken out easily.

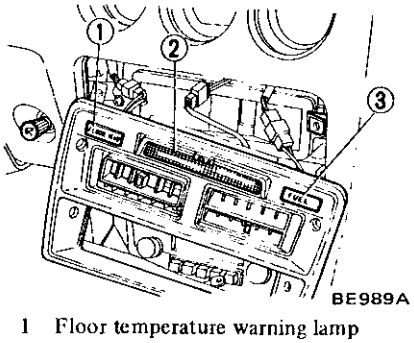

BE989A

1 Floor temperature warning lamp
2 Map lamp
3 Fuel warning lamp

Fig. BE-82 Removing finisher

4. Remove control cables at air intake duct, water cock, and floor door and disconnect mode door control rod.

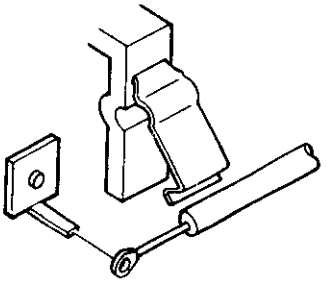

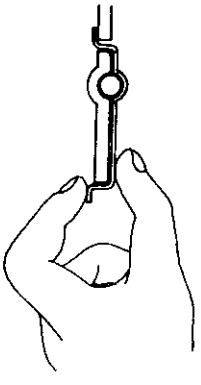

BE565

Fig. BE-83 Removing clips

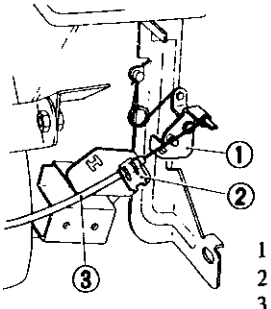

BE011B

1 Lever
2 Clamp
3 Cable

Fig. BE-84 Disconnecting intake door control cable

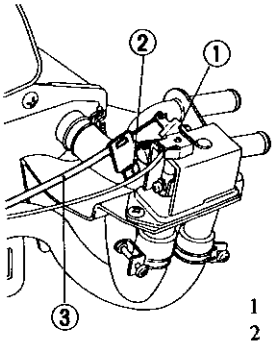

BE012B

1 Lever
2 Clamp
3 Cable

Fig. BE-85 Disconnecting heater cock control cable

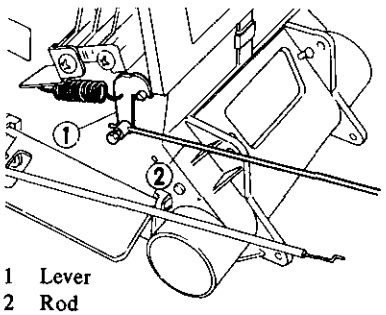

1 Lever
2 Rod

BE013B

Fig. BE-86 Disconnecting mode door control rod

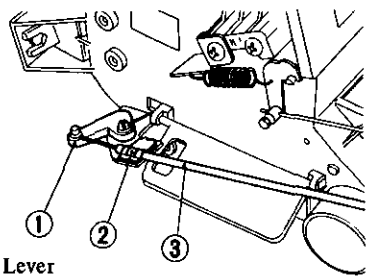

1 Lever
2 Clamp
3 Cable

BE014B

Fig. BE-87 Disconnecting floor door control cable

5. Disconnect lead wires from heater control to heater sub-harness at two connectors.
6. Remove two screws retaining control assembly to instrument panel reinforcement.

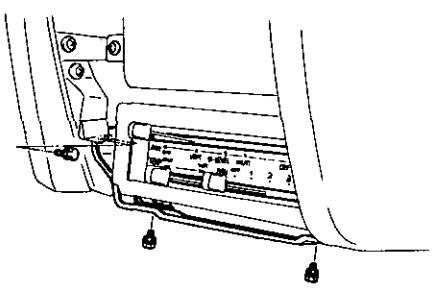

BE015B

Fig. BE-88 Removing retaining screws

7. Remove screw retaining reinforcement to instrument panel and remove reinforcement.
8. Remove two screws retaining heater control to heater unit. Heater control and bracket can then be removed.

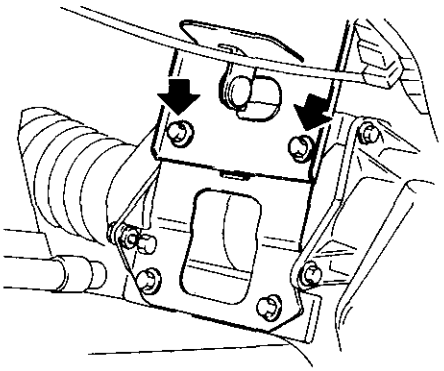

Fig. BE-89 Removing retaining screws

9. Installation is in the reverse sequence of removal. Refer to Adjustment.

Note: When installing control assembly, be careful not to twist or bend control cables.

Heater unit

1. Disconnect battery ground cable and drain engine coolant.
2. Remove console box, referring to Section BF.
3. Remove four screws retaining finisher and take out by moving forward. Disconnect lead wires at three (California models) or two (Non-California models) connectors. Finisher can then be taken out easily. See Figure BE-82.
4. Remove two screws retaining three-way venti-duct to instrument finisher bracket and four screws retaining brackets. Then remove instrument finisher brackets. Disconnect ventilator duct hose from three-way venti-duct and take out three-way venti-duct. See Figure BE-67.
5. Remove heater control as previously described.
6. Disconnect defroster ducts from heater unit and disconnect two heater hoses from inlet and outlet tubes of heater unit by removing clamps.
7. Remove two screws retaining venti-duct adapter to heater unit.
8. Remove two nuts and two screws retaining heater unit to body panel.

Two nuts and two screws can be removed from engine compartment side. Other two screws are located under the heater control location.

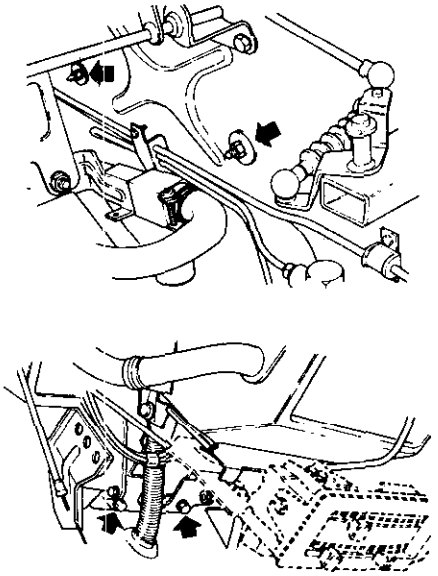

BE127A

Fig. BE-90 Removing heater unit

9. Pull heater unit out slightly and turn to left 90°. Heater unit can then be removed from center of instrument panel.
10. Installation is in the reverse sequence of removal. Refer to Adjustment.

Fan unit

1. Disconnect battery ground cable.
2. Disconnect control cable for air intake box by removing clamp at air intake duct. See Figure BE-84.
3. Disconnect lead wires for fan and resistor at connectors. Fan unit can then be taken out easily by removing retaining screws.

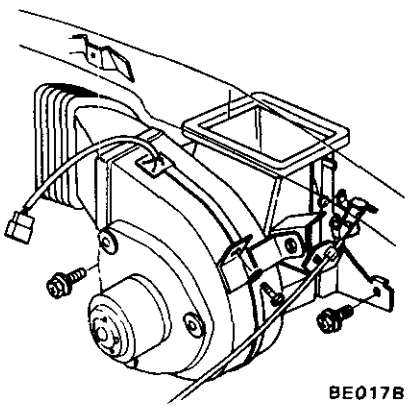

BE017B

Fig. BE-91 Removing fan unit

4. Installation is in the reverse sequence of removal.

DISASSEMBLY AND ASSEMBLY

Fan switch

1. Remove heater control. For removal procedure, refer to the previous section.
2. Remove nut securing gear to fan switch and take out gear.
3. Remove two screws retaining fan switch to heater control. Fan switch can then be taken out easily.
4. Assembly is in the reverse sequence of disassembly.

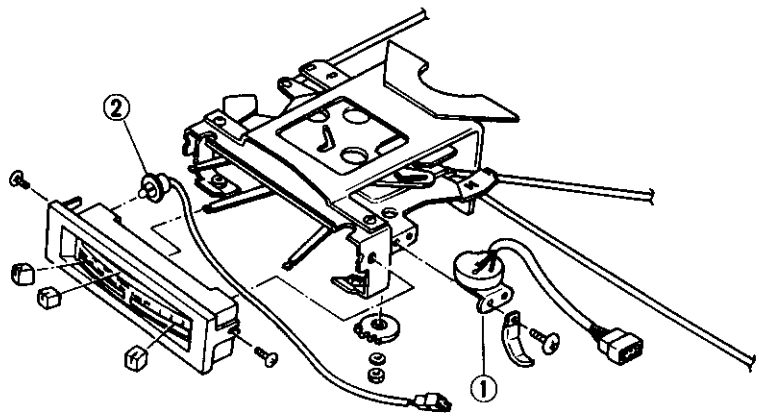

1 Fan switch
2 Illumination lamp

BE018B

Fig. BE-92 Disassembling fan switch

Heater cock and core

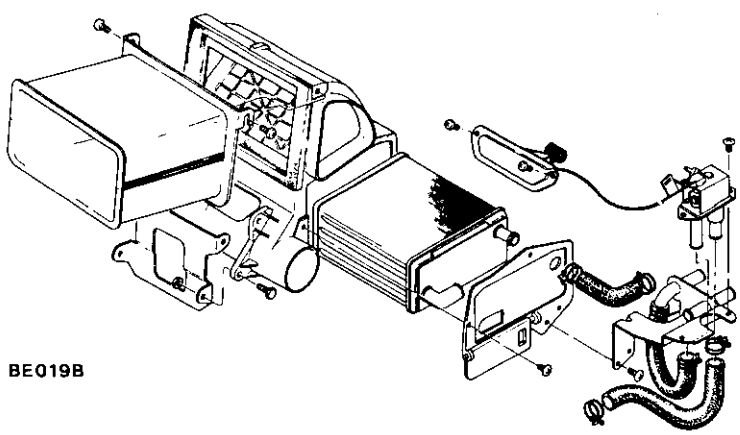

BE019B

Fig. BE-93 Removing heater cock and core

1. Remove heater unit. For removal procedure, refer to the previous section.
2. Loosen hose clamps on heater cock side and disconnect hoses from heater cock.
3. Remove two screws retaining heater cock to heater cock bracket.
4. Remove four screws retaining heater bracket to heater unit and remove heater bracket.
5. Remove two screws retaining capillary tube bracket to heater unit and then take out capillary tube from heater unit. Heater cock can then be taken out.

Notes:

a. **Make sure that capillary tube is neither twisted nor excessively bent.**
b. **When bending capillary tube, ensure that heater cock is fully open so as to prevent change in heater cock operation.**

6. Remove screws retaining heater cock bracket to heater unit and hose connector to heater unit.
7. Loosen hose clamps on heater core side and disconnect hoses from heater core. Heater cock bracket and hose connector can then be taken out.
8. Disconnect floor door operating rod from floor door.

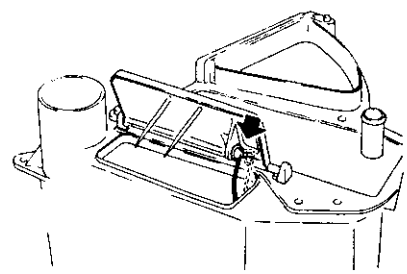

BE020B

Fig. BE-94 Disconnecting floor door rod

9. Remove screws retaining side cover to heater unit and detach side cover.
10. Pull heater core out.

Note: Be sure to detach heater core with floor door opened. Failure to do so may scratch heater core.

11. Assembly is in the reverse sequence of disassembly.

Fan unit

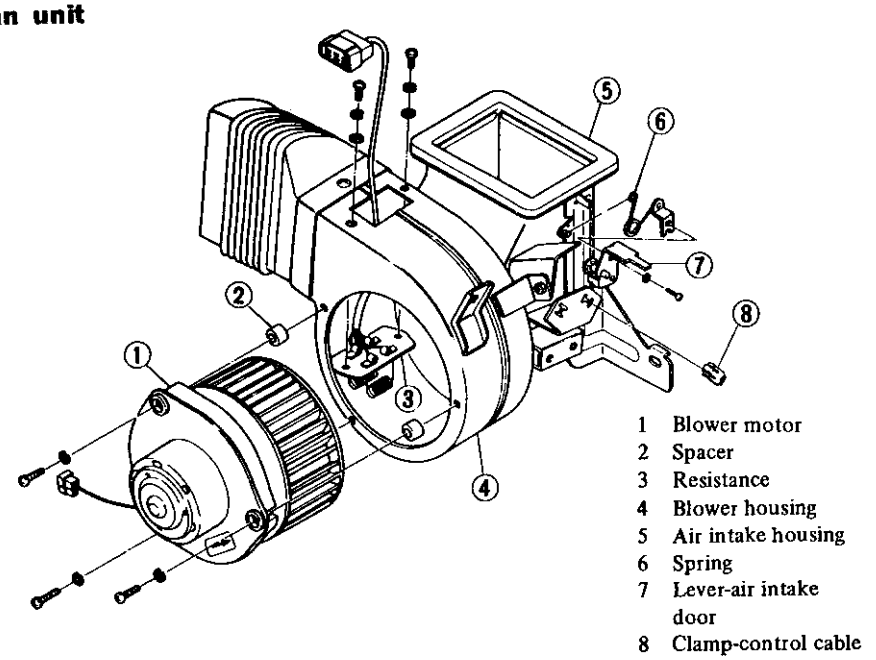

Fig. BE-95 Disassembling fan unit

1. Remove fan unit, referring to previous section.
2. Remove screw retaining air intake duct hose to blower housing and take out duct hose.
3. Remove three screws retaining fan motor to blower housing. Fan motor can then be taken out.
4. Remove two screws retaining resistor to blower housing. Resistor with harness can then be taken out through the hole in which fan motor is installed.
5. Remove four screws retaining intake duct to blower housing. Intake duct can then be taken out.
6. Assembly is in the reverse sequence of disassembly.

HEATER ILLUMINATION BULB REPLACEMENT

1. Remove heater control. For removal procedure, refer to the previous section.
2. Take out socket with bulb from behind heater control and remove bulb from socket.
3. Install new bulb and then assemble in the reverse sequence of removal. See Figure BE-92.

Bulb wattage:
Heater control illumination bulb 3.4W

ADJUSTMENT

When a new or reconditioned heater unit is installed, observe the following.

Notes:
a. **Make sure that cables are neither twisted nor excessively bent.**
b. **Be careful not to bend wires when inserting into pin.**
c. **Be sure to secure cable outer after it is pushed toward heater control.**
d. **Tighten clamps and clips securely and make sure that control lever functions properly.**

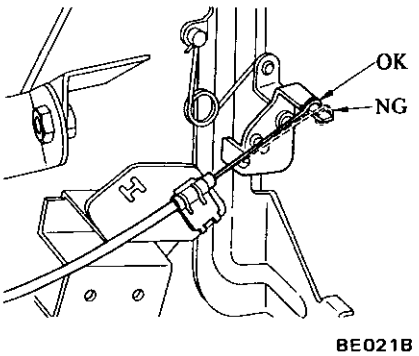

Fig. BE-96 Inserting wire into pin

Air intake door

1. Set AIR lever in OFF position.
2. Close air intake door and fasten cable outer with clamp.

Note: Make sure that the tip end of cable outer is not exposed beyond 10 mm (0.394 in) at clamp location.

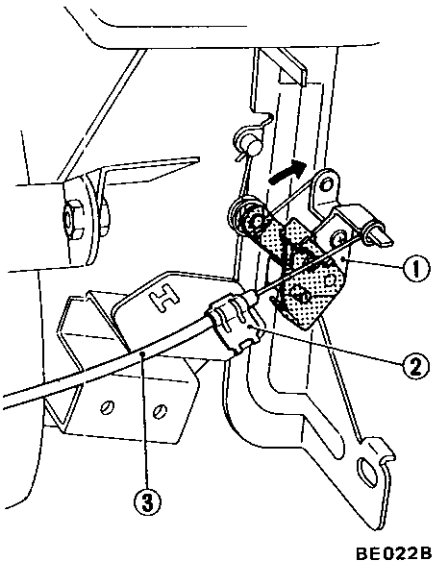

1 Air intake door lever
2 Clamp
3 Cable

Fig. BE-97 Adjusting air intake door

Mode door

1. Place AIR lever in HEAT position.
2. With mode door lever moved toward the dash panel side, fasten control rod with screw.

Note: Make sure that AIR lever and mode door lever are in HEAT position.

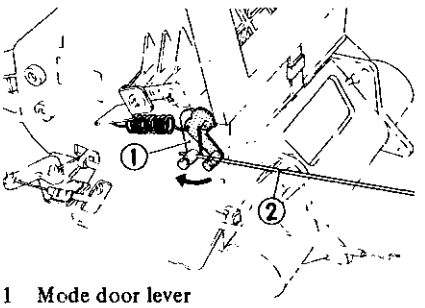

1 Mode door lever
2 Mode door rod

Fig. BE-98 Adjusting mode door

Floor door

1. Place AIR lever in DEF position.
2. Move floor door lever to DEF position, and set lead wire at door lever.
3. Fasten cable outer with clamp with the tip end of the cable outer exposed 2 mm (0.118 in) beyond clamp.

Notes:

a. **Make sure that AIR lever and floor door lever are moved to DEF position.**
b. **Make sure that doors are closed when connecting cables.**

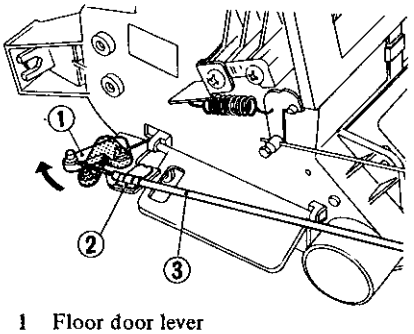

1 Floor door lever
2 Clamp
3 Cable

BE024B

Fig. BE-99 Adjusting floor door

Heater cock

1. Place TEMP lever in HOT position.
2. Pull heater cock lever toward you (HOT), and set cable wire at cock lever.
3. Fasten cable outer with clip.

Notes:

a. **Make sure that TEMP lever and heater cock lever are in HOT position.**
b. **If heater cock is not set properly, warm air may flow into the compartment when not desired.**

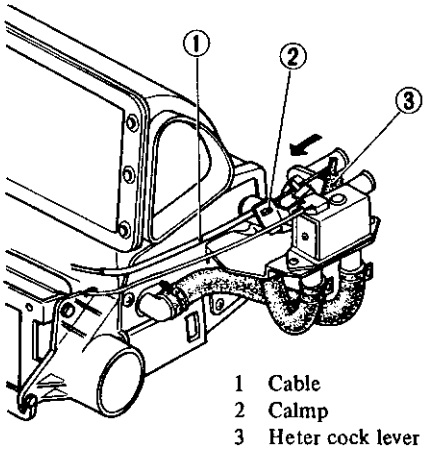

1 Cable
2 Calmp
3 Heter cock lever

BE025B

Fig. BE-100 Adjusting heater cock

INSPECTION

Inspect all parts of heater box for damage. Refer to Trouble Diagnoses and Corrections. For electrical system, check wiring, fan switch resistor and fan motor for continuity.

If fan motor fails to rotate check following items.

1. Fuse and fusible link.
2. To check for burned out fuse, follow same procedure as for ordinary fuses using a circuit tester or test lamp.
3. Loose wire connection.

Fan motor power supply

1. Disconnect lead wires at connector.
2. Move ignition switch to ON position.
3. Connect test lamp lead wire to "LY" color wire terminal in connector plug on dash harness side and other to ground.
4. Make sure test lamp comes on.

Fan motor

1. Disconnect lead wires at connector.
2. Move ignition switch to ON position.
3. Connect test lead to positive side of fuse block power supply and other to terminal in connector plug on fan motor side. Another terminal for fan motor, must be connected to earth (body earth).
4. Make sure fan motor operates at each fan lever position.

Fan switch

Test continuity through the switch at each step with test lamp or ohmmeter.

Refer to following continuity diagram for fan switch.

Wiring system

Test system continuity with ohmmeter or test lamp. Refer to following wiring diagram for heater and illumination lamp.

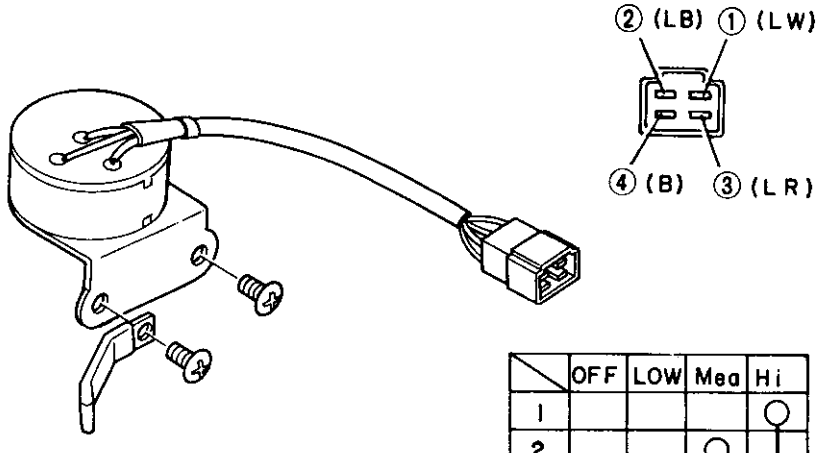

	OFF	LOW	Mea	Hi
1				○
2			○	
3		○		
4		○	○	○

BE026B

Fig. BE-101 Fan switch

Heater

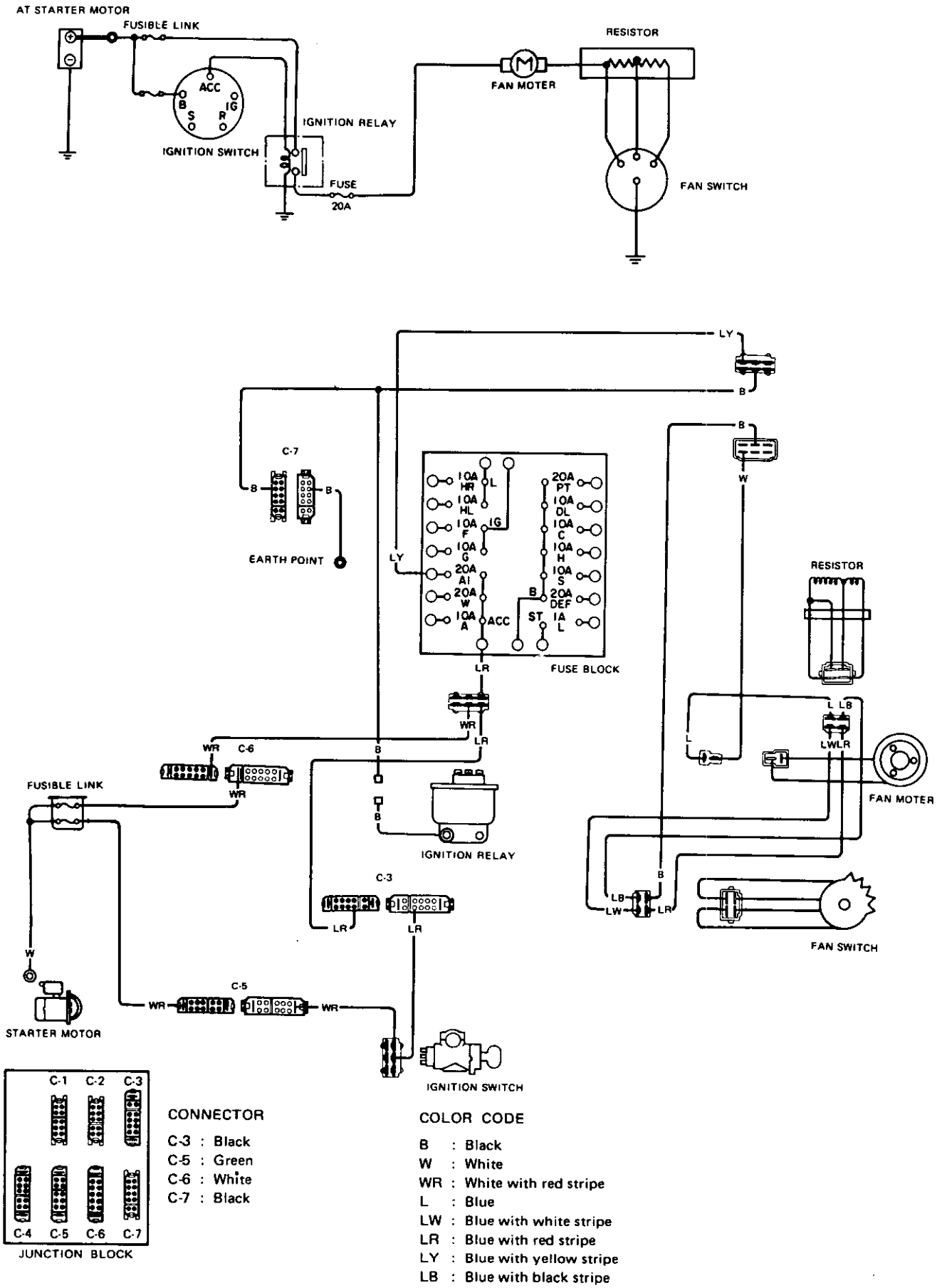

Fig. BE-102 Circuit diagram for heater

Heater illumination

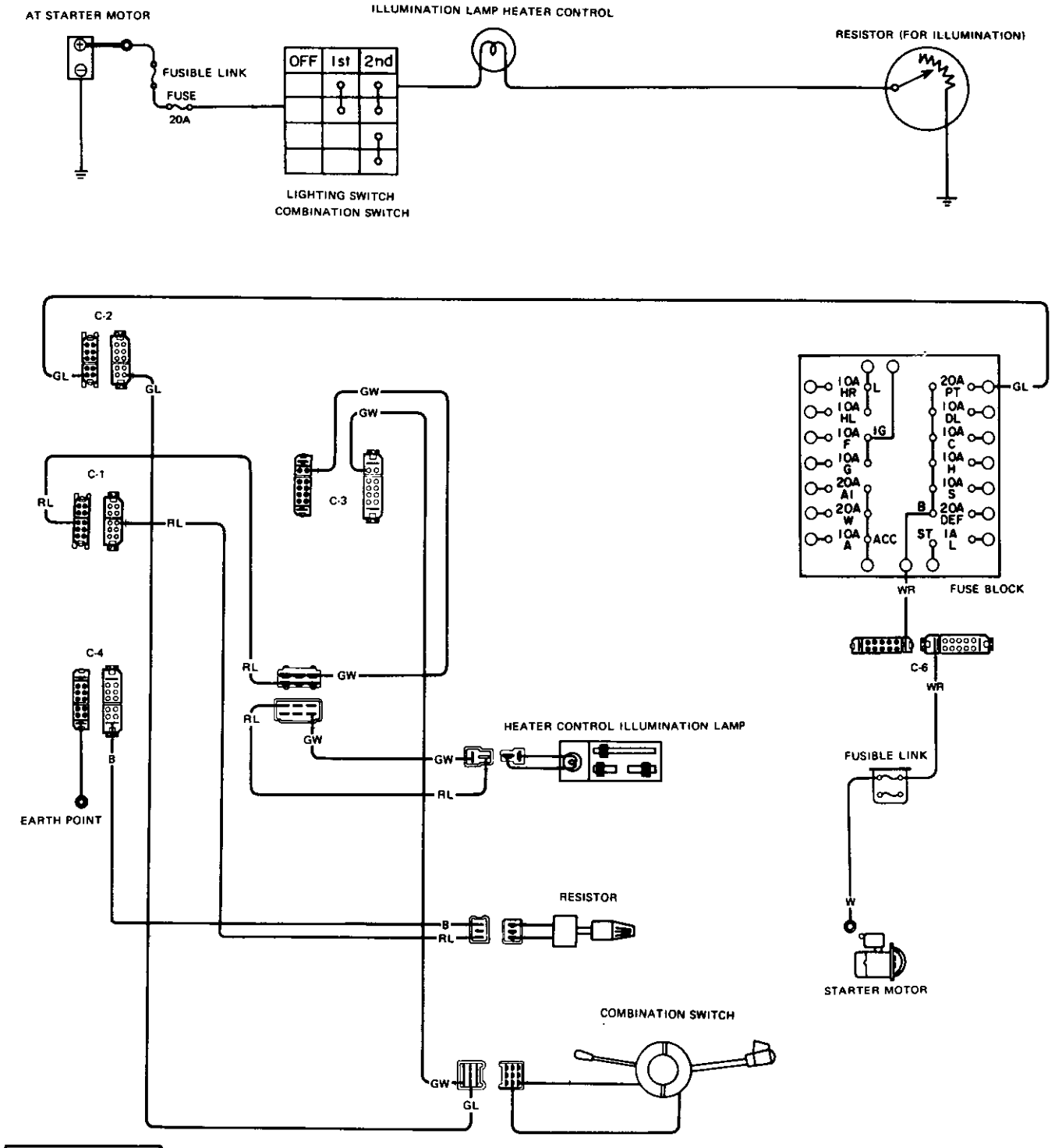

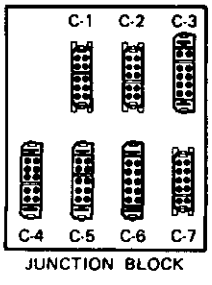

CONNECTOR

C-1 : Green
C-2 : Blue
C-3 : Black
C-4 : Brown
C-6 : White

COLOR CODE

B : Black
W : White
WR : White with red stripe
RL : Red with blue stripe
GW : Green with white stripe
GL : Green with blue stripe

BE028B

Fig. BE-103 Circuit diagram for heater illumination

TROUBLE DIAGNOSES AND CORRECTIONS

Condition	Probable cause	Corrective action
Insufficient heating performance.		
No heated air discharged.	Cooling water temperature too low.	Check thermostat. Replace as necessary.
	Heater core plugged.	Clean.
	Insufficient cooling water level.	Refill.
	Water cock not operating properly.	Adjust control cable.
	Mode door not operating properly.	Adjust control cable.
Insufficient air flow to floor.	Fan motor speed too low.	Check motor terminal voltage. Repair poor connection and discontinuity. Replace motor if necessary.
	Floor door and mode door not operating properly.	Adjust control cable.
Insufficient defrosting performance.		
Cold air discharged.	Refer to "No heated air discharged".	
Insufficient air flow to defroster.	Floor door and mode door not operating properly (or seal damaged).	Adjust control cable.
	Defroster nozzle plugged.	Clean.
	Leak at defroster duct-to-nozzle connection.	Correct.
Heated air discharged with lever in VENT.	Water cock not operating properly.	Adjust control cable.
	Mode door not operating properly (or seal damaged).	Adjust control cable.
Failure of fan to run.	Fuse melted.	Replace.
	Motor wire connector disconnected.	Correct.
	Switch damaged.	Replace.
	Motor damaged.	Check and correct.
Control lever drags.	Inner wire rubbing against outer case end.	Adjust control cable.
	Control cable bent excessively.	Correct.
	Doors, door levers, etc. not operating properly.	Check and correct.
Outside air comes in with fan in OFF.	Air intake door not operating properly.	Repair or replace.
	Control cable out of adjustment.	Adjust control cable.
Noise from fan motor	Unusual noise from fan motor.	Check and tighten loose bolts.

HORN

DESCRIPTION

The horn electrical system consists of a horn switch, a horn relay, two horns and lead wires connecting these parts to each other. Horn is dual type; one is for low tone and the other for high tone. They can be distinguished by the letter L or R printed on their body. Horn relay is installed on relay bracket.

REMOVAL AND INSTALLATION

Horn

A pair of horns are installed in front of radiator.

1. Disconnect horn lead wire at connector.
2. Remove two screws retaining horn to bracket.
3. Installation is in the reverse sequence of removal.

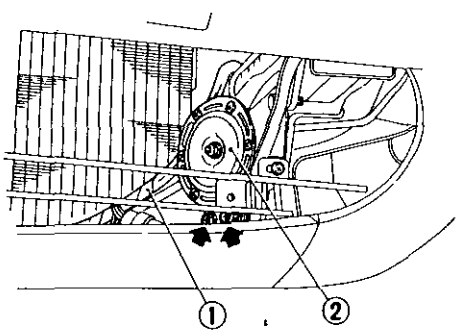

1 Engine room harness
2 Horn

BE595A

Fig. BE-104 Removing horn

Horn switch

The horn switch is an integral part of steering column.

The combination switch has a lead wire for horn, so refer to Figure BE-39 for combination switch.

Horn relay

The horn relay is installed on relay bracket.

1. Disconnect battery ground cable.
2. Disconnect three lead wires for horn relay at connectors.
3. Remove screw retaining horn relay to relay bracket. Horn relay can then be taken out.
4. Installation is in the reverse sequence of removal.

INSPECTION

Test system continuity and each unit with test lamp or ohmmeter. Refer to Figure BE-105 for horn relay and BE-106 for horn system. In testing horn relay, there must be continuity between ①–②. When 12V direct current is given to ①–②, there must be continuity between ①–③.

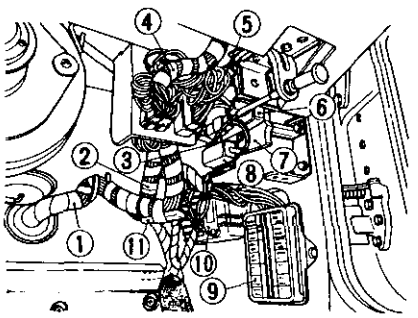

BE969A

1 Engine compartment harness
2 Dash harness
3 Intermittent wiper amplifier
4 Instrument harness
5 Ignition relay
6 Horn relay
7 Relay bracket
8 Timer unit
9 Fuse block
10 Transistor ignition unit
11 Resistor for tachometer

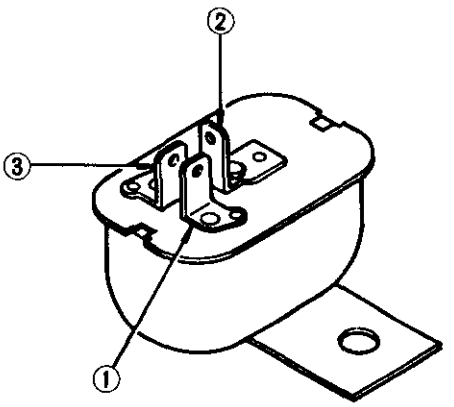

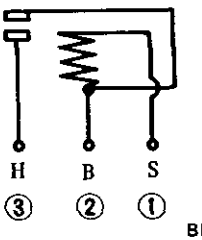

BE569A

Fig. BE-105 Horn relay

TROUBLE DIAGNOSES AND CORRECTIONS

Condition	Probable cause	Corrective action
Horn does not operate.	Discharged battery. (Measure specific gravity of electrolyte.)	Recharge or replace battery.
	Burnt fuse.	Correct cause and replace fuse.
	Faulty horn button contact. [Horn sounds when horn relay terminal ① is grounded.]	Repair horn button.
	Faulty horn relay. [Horn sounds when ② and ③ horn relay terminals are connected with a test lead.]	Replace horn relay.
	Faulty horn or loose horn terminal connection.	Correct horn terminal connection or replace horn.
Horn sounds continuously.	Short-circuited horn button and/or horn button lead wire. [When black lead wire is disconnected from horn relay terminal①, horn stops sounding.]	Repair horn button or its wiring.
	Faulty horn relay.	Replace horn relay.
Reduced volume and/ or tone quality.	Loose or poor connector contact. (Fuse, relay, horn and/or horn button.)	Repair.
	Faulty horn.	Replace.

Horn

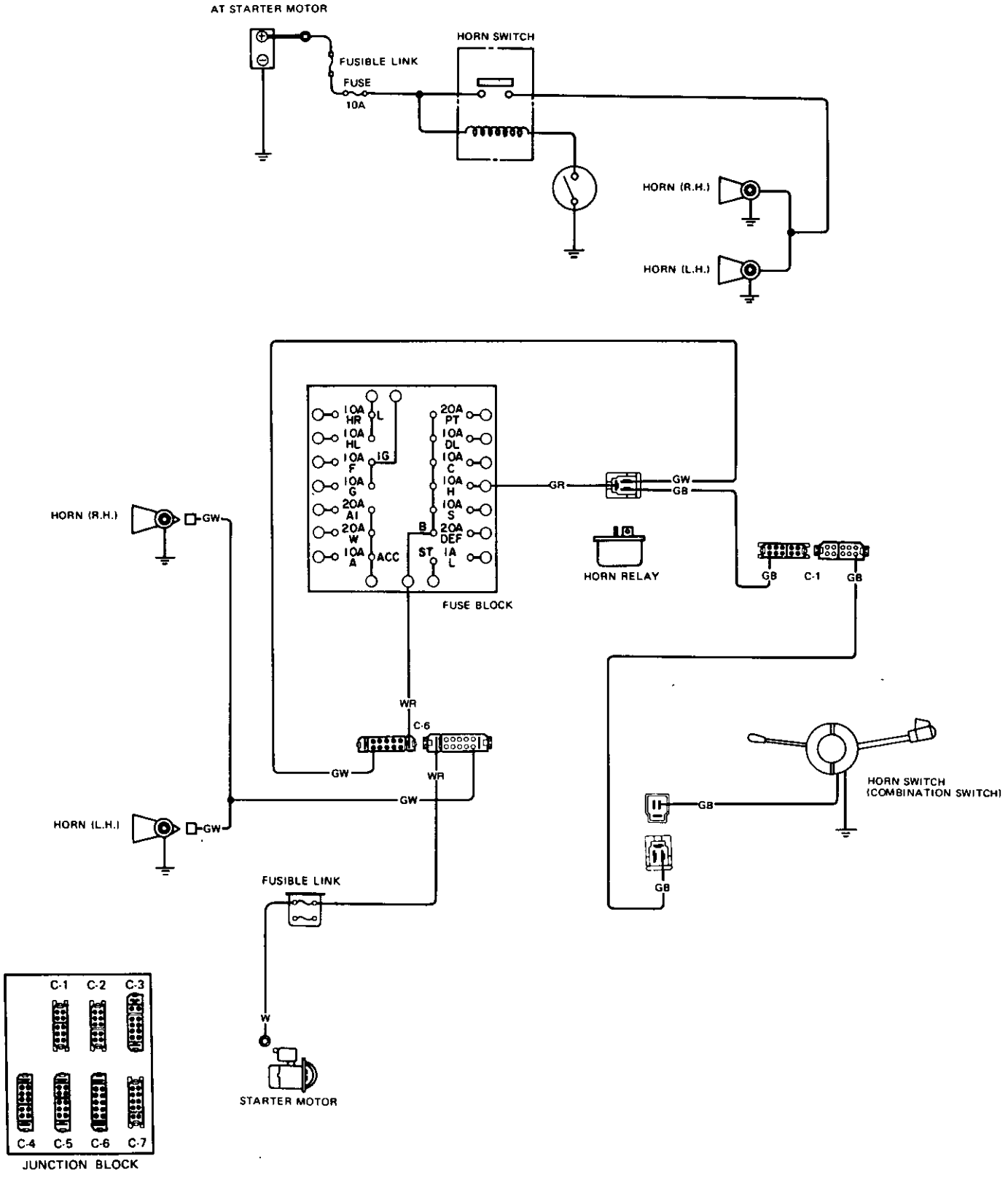

CONNECTOR

C-1 : Green
C-6 : White

COLOR CODE

W : White
WR : White with red stripe
GW : Green with white stripe
GR : Green with red stripe
GB : Green with black stripe

BE029B

Fig. BE-106 Circuit diagram for horn

WINDSHIELD WIPER AND WASHER

DESCRIPTION

The windshield wiper and washer system consists of a wiper motor, wiper links and arms, washer nozzles, a washer tank, a washer motor, an intermittent amplifier and a wiper switch. The wiper switch is an integral part of combination switch. Washer motor operates when the knob at the top end of combination switch lever is pressued into the lever. The wiper system also has an intermittent amplifier.

This wiper system is equipped with a rise-up mechanism. Wiper motor revolves reversely for one turn at the end of use with the aid of relay. Then, wiper linkage varies in length and stops wiper blades at lower position than normal wiping area.

Both the wiper motor and the intermittent amplifier have contacts. Refer to Figure BE-118. The motor contacts are controlled by the wiper switch, while amplifier contacts are controlled by an integrated circuit in the amplifier, that is, electric current flowing through the coil (RL) is not powerful enough to switch the contacts in the amplifier.

When the condenser (C_2) is charged with electric current flowing through the coil (RL), however, the transistors (Tr_1 and Tr_2) switch on and electric current increases. The contacts are then changed.

Amplifier contacts are for bypassing the auto-stop mechanism in the wiper motor. Consequently, when the amplifier contacts change, the motor begins to rotate. The condenser (C_2) discharges electric current as the wiper link rotates one turn and the contacts revert to their original position. Wiper motor then stops with the aid of the auto-stop mechanism.

When the condenser is re-charged, the motor starts again. Wiper motor contacts are for changing rotating direction; normal rotation or reverse rotation. When the wiper switch is turned off, the motor contacts change. Consequently as soon as the switch is turned off, the motor begins to rotate reversely and stops. If a washer is in use, condensers (C_1 and C_2) are charged with electric current through washer motor circuit and change contacts in amplifier; wiper motor thus rotates without auto-stop mechanism.

If washer motor is stopped, condensers (C_1 and C_2) begin to discharge electric current. The amplifier contacts revert back to their original positions and the wiper motor stops with the aid of auto-stop mechanism.

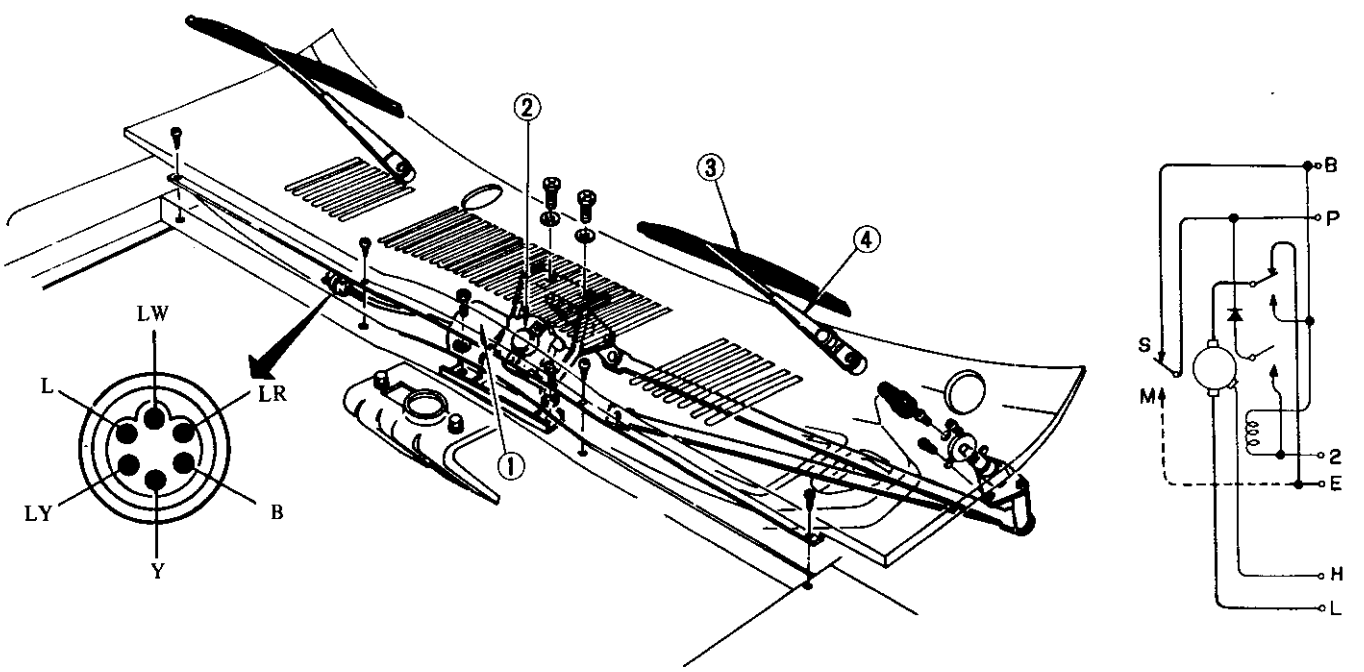

COLOR CODE

L ..... Blue
Y ..... Yellow
B ..... Black
R ..... Red
W ..... White
G ..... Green

1 Windshield wiper motor assembly
2 Auto-stop mechanism
3 Windshield wiper blade
4 Windshield wiper arm

BE572A

Fig. BE-107 Windshield wiper and washer system

ADJUSTMENT

Wiping area

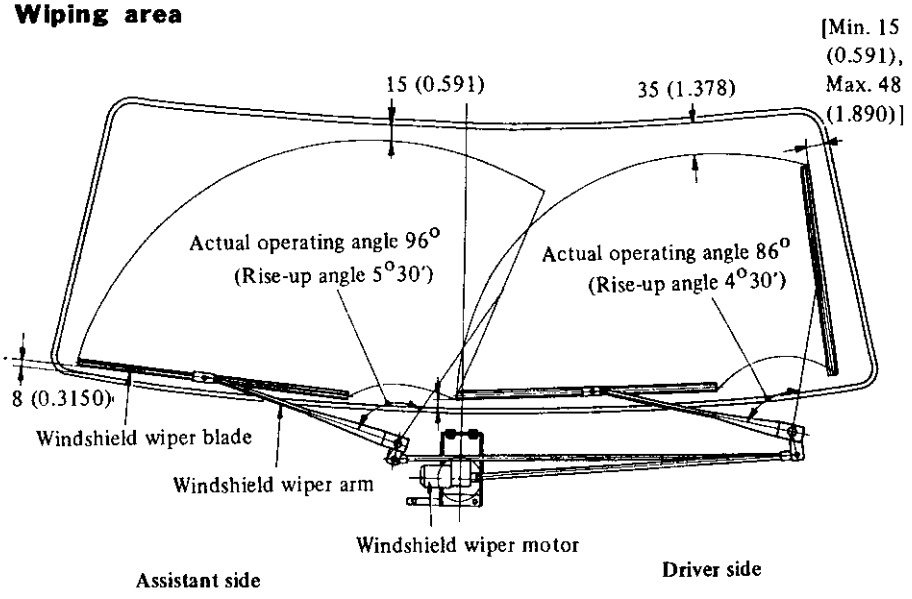

Unit: mm (in)

Fig. BE-108 Wiping area

To adjust wiping area, loosen arm set nut and adjust blade to correct installation angle to obtain correct sweeping zone as sketched in figure above.

Then, secure nut at specified tightening torque.

Tightening torque:
Wiper blade arm lock nut:
0.8 to 1.0 kg-m
(5.8 to 7.2 ft-lb)

Nozzle direction

Adjust nozzle direction so that fluid is sprayed in proper range by bending nozzle with screwdriver. This adjustment can be carried out through cowl top grille.

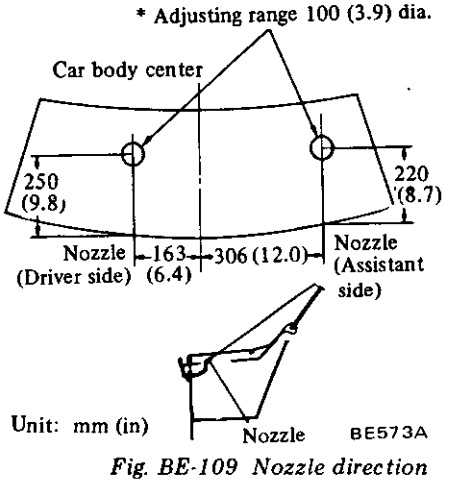

Unit: mm (in)

Fig. BE-109 Nozzle direction

REMOVAL AND INSTALLATION

Wiper arm and wiper blade

Remove arm and blade assembly from pivot in this sequence.

1. Raise wiper blade from windshield glass.
2. Unscrew arm set nut. Arm can then be pulled off pivot.
3. Install in reverse sequence of removal.

Note: Be sure to install arm and blade assembly in correct peak position. Position of blade can be adjusted when pushing it onto pivot.

Tightening torque:
Arm set nut:
0.8 to 1.0 kg-m
(5.8 to 7.2 ft-lb)

To remove blade, raise tab to unlatch blade lock and pull blade off top end of arm.

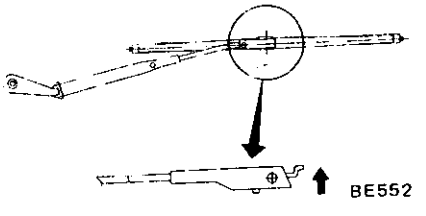

Fig. BE-110 Removing wiper blade

Wiper motor and linkage

1. Remove wiper arm, referring to previous section.
2. Open hood, and disconnect wiper motor connector.

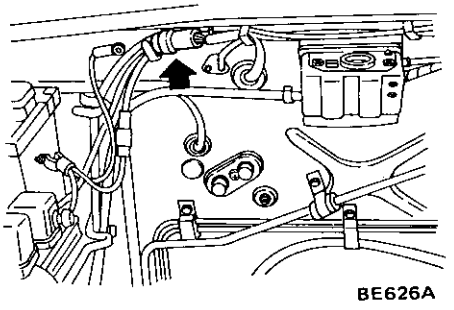

Fig. BE-111 Connector for wiper mortor

3. Remove cowl top grille by removing cowl top retaining screws.

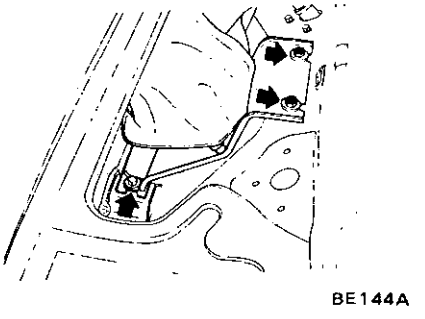

Fig. BE-112 Wiper motor

4. Remove four screws retaining wiper motor bracket.

The bracket with wiper motor can then be taken out. Refer to Figure BE-112.

5. Remove three screws retaining pivot.
6. The linkage can then be taken out easily. Refer to Figure BE-113.

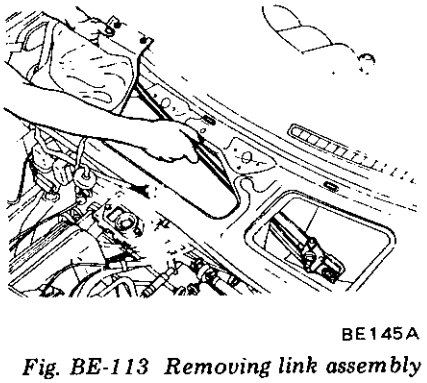

Fig. BE-113 Removing link assembly

Washer nozzle

1. Remove washer nozzle fixing screws from cowl top panel.
2. Take out washer nozzle with tube.
3. Install in reverse sequence of removal.

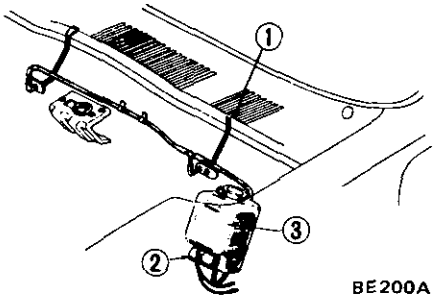

1 Nozzle
2 Windshield washer motor
3 Windshield washer tank

Fig. BE-114 Washer nozzle

Washer pump and tank

The washer pump is installed at bottom of washer tank.

1. Remove washer tank with washer motor from tank bracket in engine room.
2. Disconnect two washer pump lead wires at connectors.
3. Remove hoses from washer pump and drain washer fluid.
4. Separate washer pump from washer tank.
5. Install washer tank and motor assembly in reverse sequence of removal.

Note: In assembling washer motor and washer tank, it is recommended that soapy water be used to facilitate the operation.

Caution for windshield washer operation

1. Be sure to use only washing solution.

Never mix soap powder or detergent with solution.

2. Do not operate windshield washer continuously for more than 30 seconds or without washer fluid. This often causes improper windshield washer operation. Normally, windshield washer should be operated 10 seconds or less at one time.

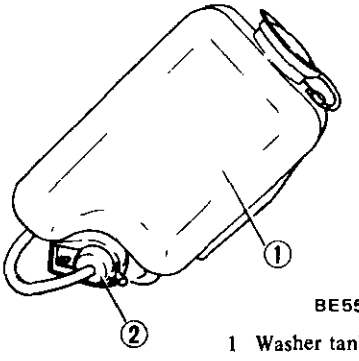

1 Washer tank
2 Washer pump

Fig. BE-115 Washer pump and tank

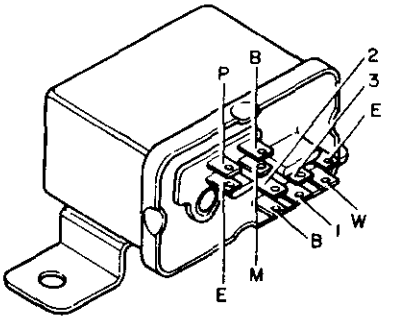

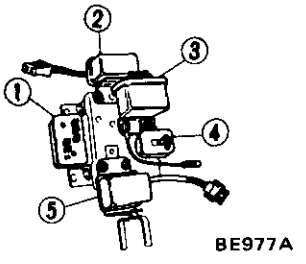

1 Intermittent wiper amplifier
2 Rear defogger relay
3 Ignition relay
4 Horn relay
5 Timer unit

Wiper switch

Wiper switch and washer switch are integral parts of combination switch, so, refer to page BE-27 for Removal of Combination Switch.

Intermitter wiper relay

The intermittent wiper relay is installed on relay bracket.

1. Disconnect two connectors for intermittent wiper relay.
2. Remove intermittent wiper relay retaining screws.

Then, intermittent wiper relay can be taken out of bracket.

3. Installation is in the reverse sequence of removal.

INSPECTION

Check operation of each part of wiper system and test continuity of system with ohmmeter or test lamp.

For electrical wiring, refer to Figures BE-117 and BE-118 windshield wiper circuit diagram.

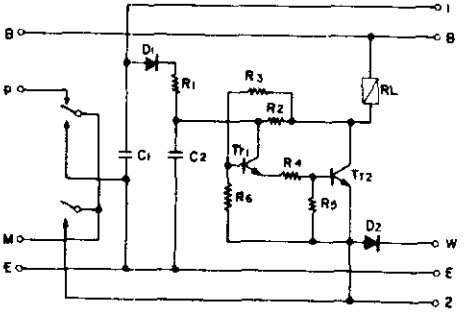

BE146A

Fig. BE-116 Intermitter wiper relay

TROUBLE DIAGNOSES AND CORRECTIONS

Condition		Probable cause		Corrective action
Windshield wiper does not operate.		Motor	No current flows to motor due to:	
			Broken armature.	Replace motor.
			Worn motor brush.	Replace motor.
			Motor is overheated due to seized motor shaft.	Replace motor.
			Windshield wiper fuse (20A) is easily fused due to short-circuit, rate short-circuit, or inside motor component burnt.	Replace motor or repair short-circuited part.
		Power supply and cable	Blown fuse due to problem in other part of windshield wiper circuit.	Check other part for operation and correct problem.
			Loose, open or broken wiring.	Check wiring near motor and connector for proper connection. Correct if necessary.
			Erroneous wiring.	Check each wire for color code, and correct if necessary.
			Improper grounding.	Correct.
		Switch	Improper switch contact.	Correct.
		Link	Foreign materials interrupt movement of windshield wiper circuit.	Correct.
			Disconnected link rod.	Correct.
			Seized or rusted arm shaft.	Lubricate or replace arm shaft.
		Windshield wiper blade	Windshield wiper blade sticks on windshield glass.	Raise arm and operate windshield wiper without applying load. Clean windshield glass and/or replace wiper blade.
Windshield wiper speed cannot be adjusted correctly.		Motor	Low or high speed motor brush is worn.	Replace motor.
Windshield wiper does not stop correctly.	Stops anywhere.	Motor	Contaminated auto-stop relay contacts or improper contact due to foreign matter.	Remove auto-stop device cover, and clean contacts carefully so as not to deform relay plate.
		Cable and switch	Improper connection between 1st and 2nd switch steps.	Remove switch, and make sure that 1st and 2nd steps are not connected at "OFF" position. If connected, replace switch.
	Does not stop.	Motor	Incomplete auto-stop operation (Contact is not interrupted.).	Remove auto-stop device cover, and correct relay plate bending.

Condition	Probable cause		Corrective action
Windshield wiper operating speed is too slow.	Motor	With arm raised, excessive current still flows due to layer short-circuit of motor armature.	Replace motor.
		Windshield wiper stops when lightly held with hand due to worn motor brush.	Replace motor.
		With arm raised, excessive current still flows (3 to 5A) due to seized motor shaft.	Replace motor or lubricate bearing with engine oil.
	Power supply and cable	Low source voltage.	Measure voltage, check other electrical parts for operation, and take corrective action for power supply if necessary.
	Link	Humming occurs on motor in arm operating cycle due to seized arm shaft.	Lubricate or replace.
	Switch	Improper switch contact.	Conduct continuity test, and replace if necessary.

Windshield washer

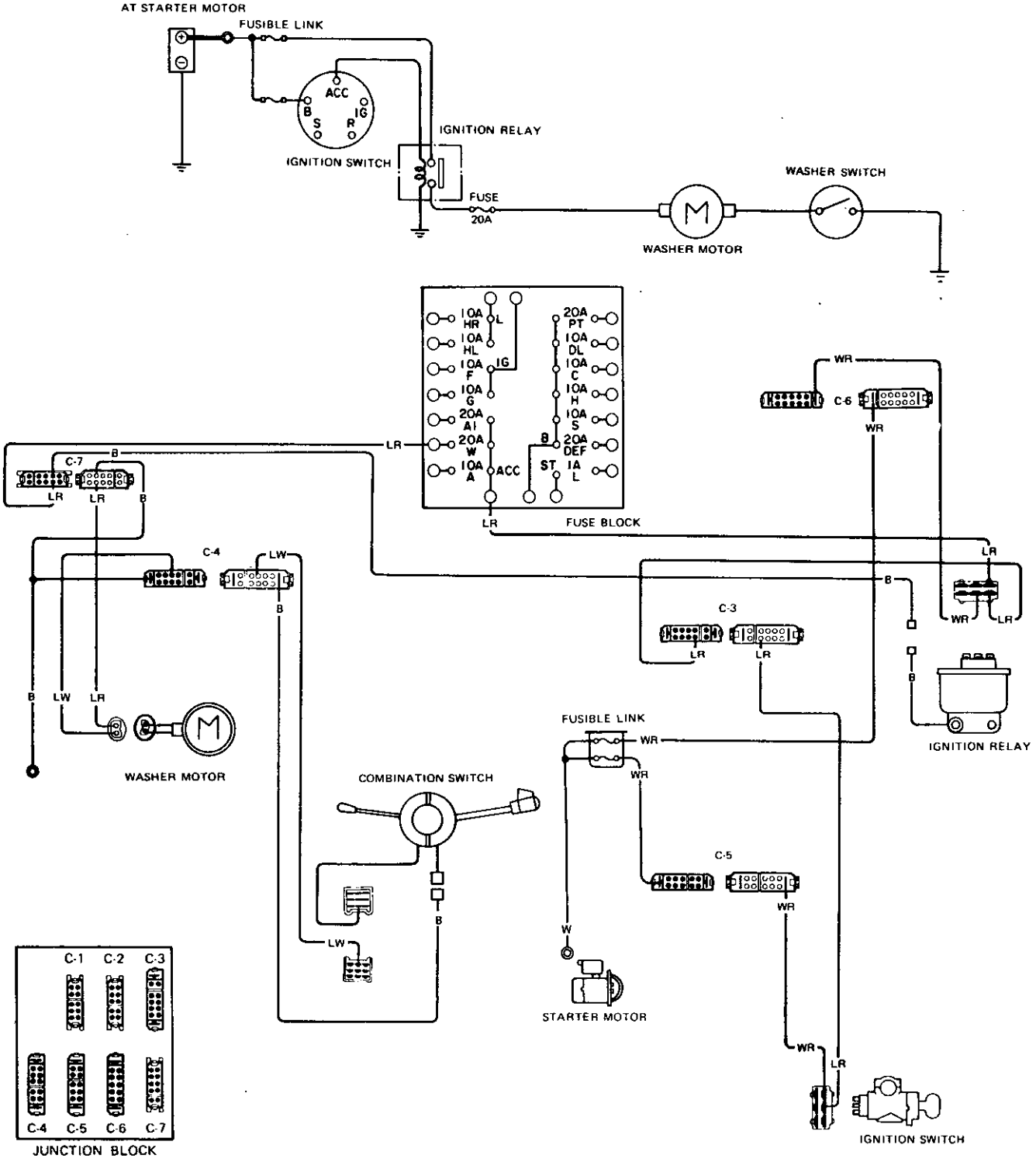

CONNECTOR		COLOR CODE	
C-3	: Black	B	: Black
C-4	: Brown	W	: White
C-5	: Green	WR	: White with red stripe
C-6	: White	LW	: Blue with white stripe
C-7	: Black	LR	: Blue with red stripe

BE030B

Fig. BE-117 Circuit diagram for windshield washer

Wiper

"OFF" position

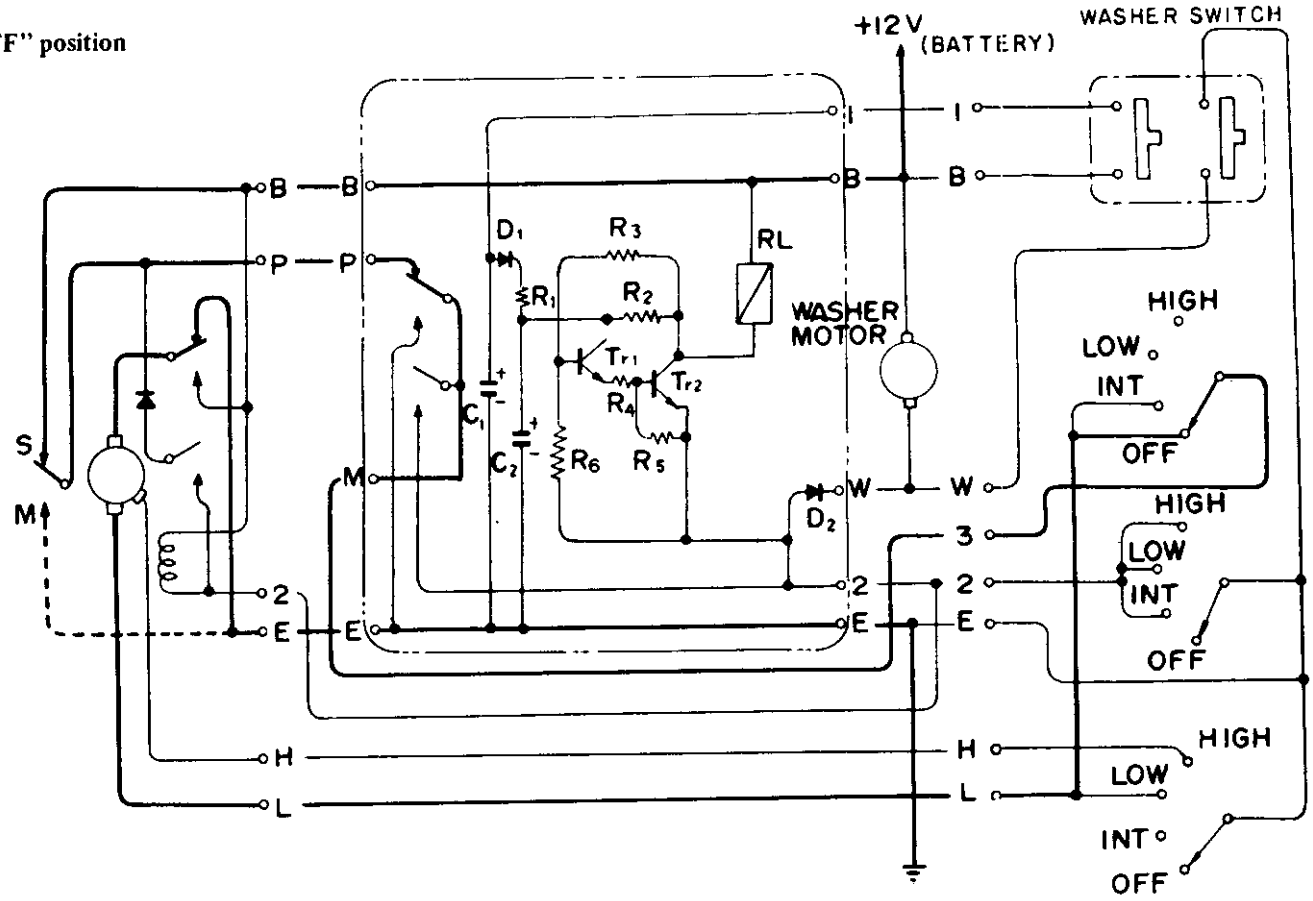

"Int" position

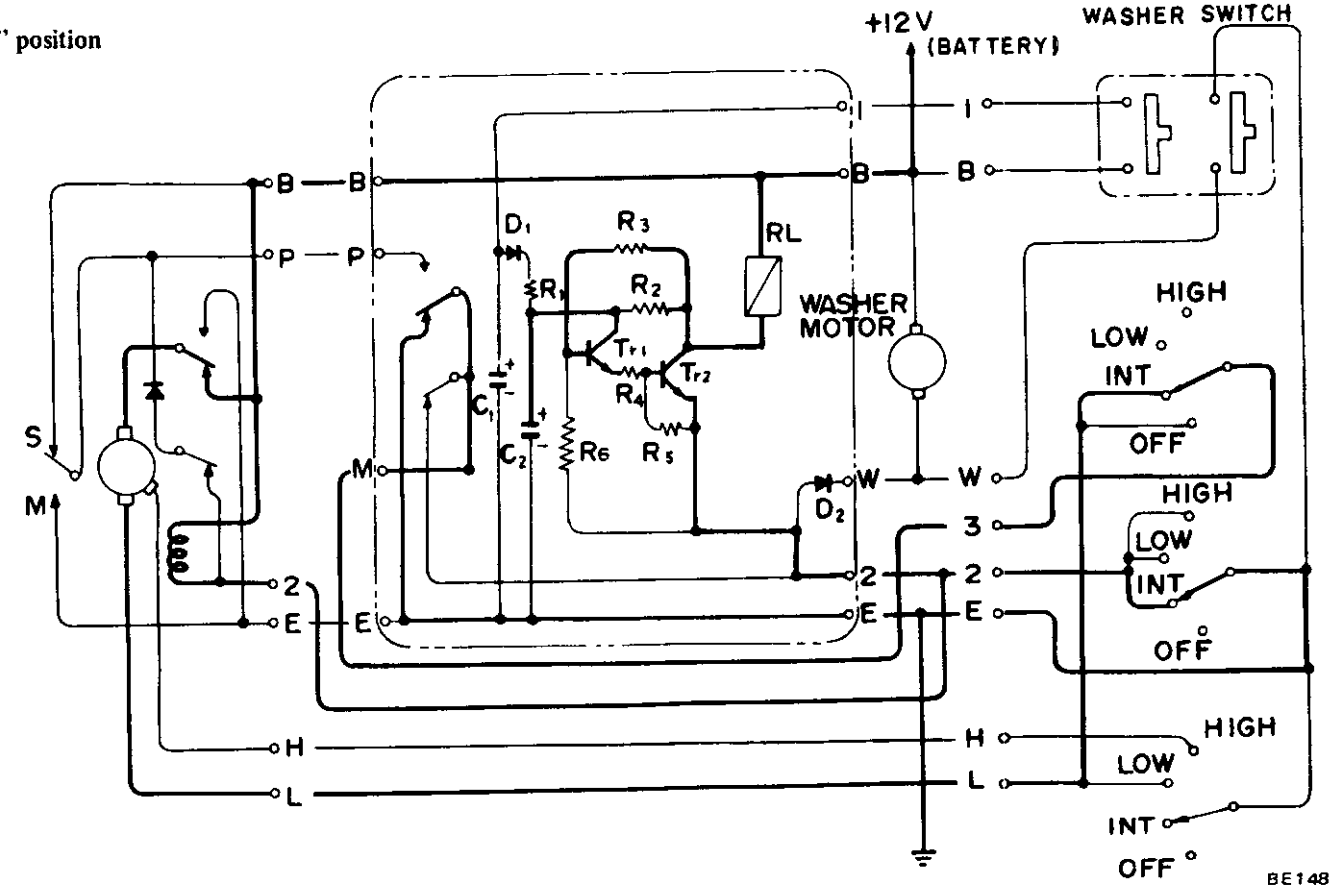

BE148A

Fig. BE-118-1 Circuit diagram for windshield wiper

"High" position

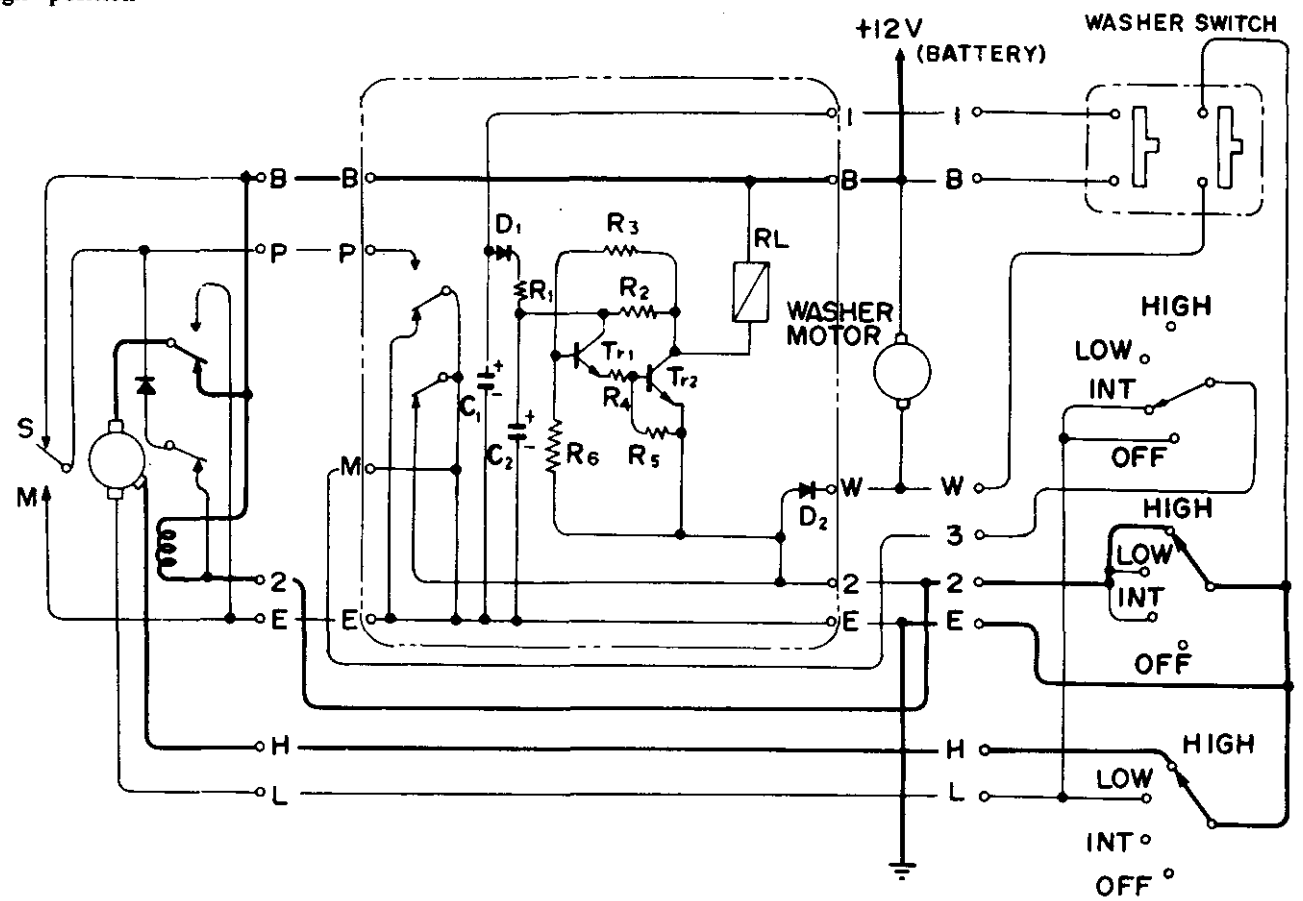

"Low" position

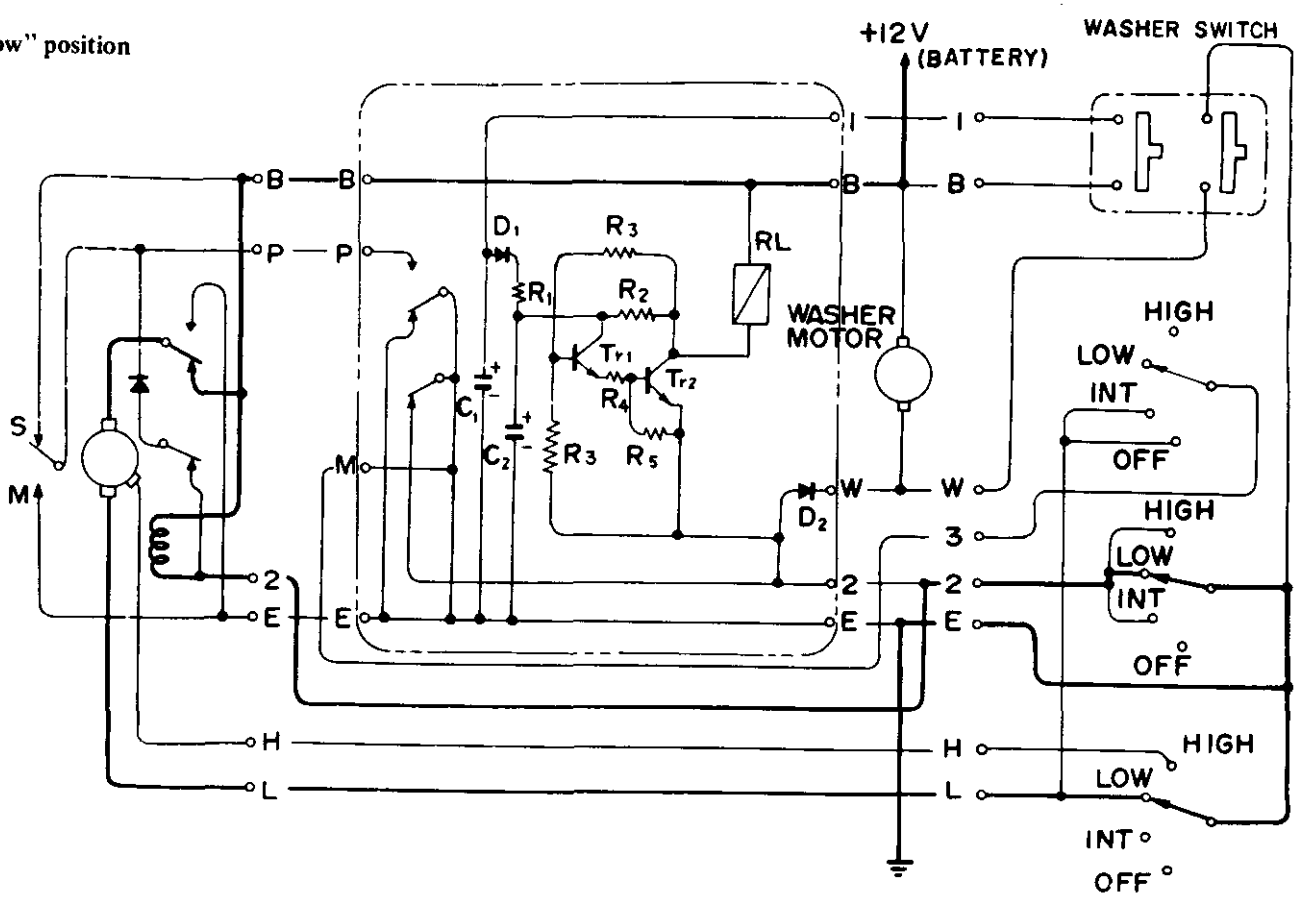

Fig. BE-118-2 Circuit diagram for windshield wiper

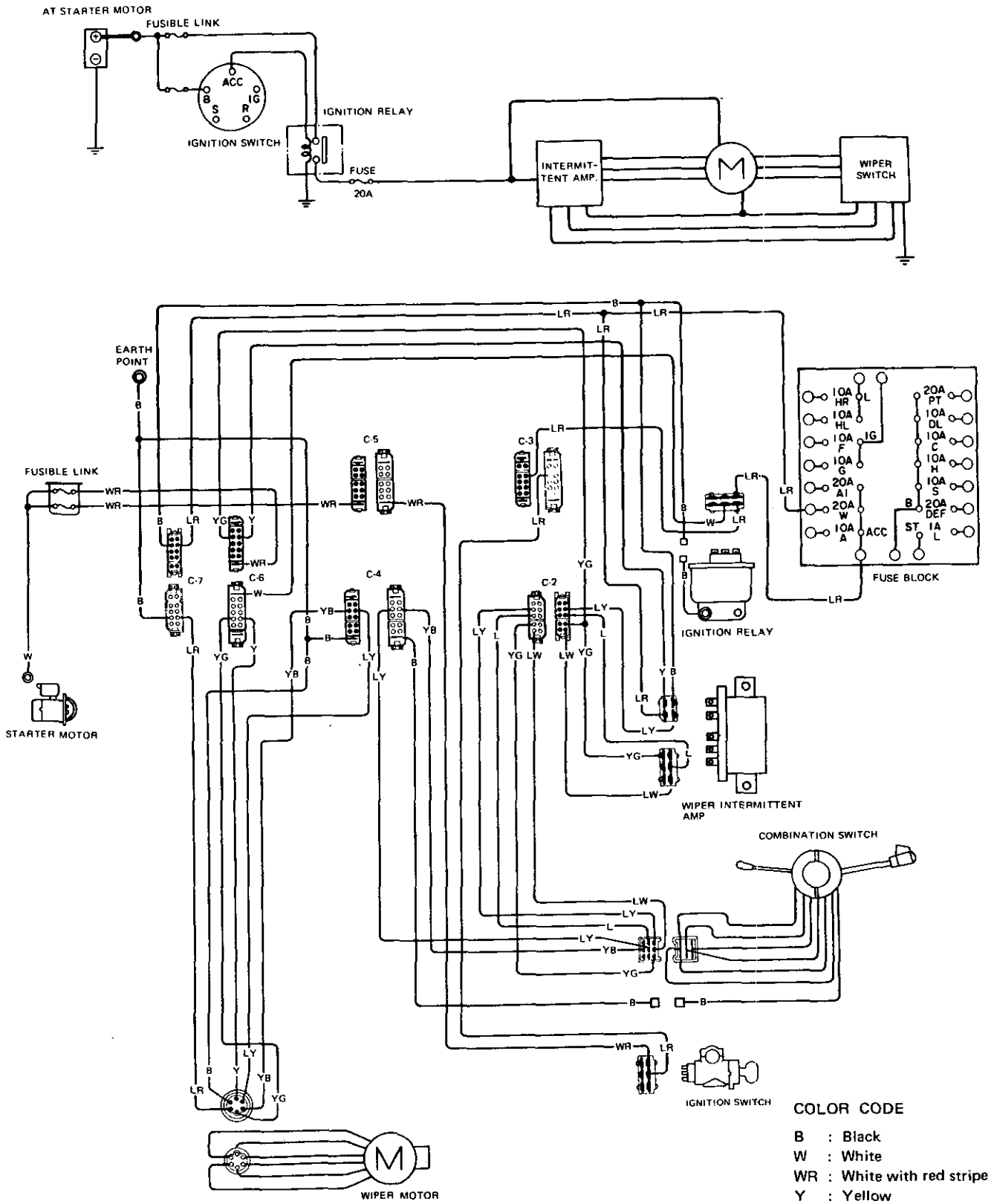

CONNECTOR

C-2 : Blue
C-3 : Black
C-4 : Brown
C-5 : Green
C-6 : White
C-7 : Black

COLOR CODE

B : Black
W : White
WR : White with red stripe
Y : Yellow
YB : Yellow with black stripe
YG : Yellow with green stripe
L : Blue
LW : Blue with white stripe
LR : Blue with red stripe
LY : Blue with yellow stripe

BE031B

Fig. BE-118-3 Circuit diagram for windshield wiper

CIGARETTE LIGHTER

DESCRIPTION

The cigarette lighter consists of a lighter, a housing, a housing cover, and an illumination lamp.

The housing is secured on instrument panel by housing cover. A fuse is added at the bottom of housing. When pushed into housing, lighter is retained by nails in housing and gets continuity through heater coil at end of lighter.

When heater is warmed enough, the bi-metal nail frees lighter. Lighter then pops out by spring back, and breaks its continuity.

ILLUMINATION BULB REPLACEMENT

1. Remove tachometer, referring to page BE-39 for Removal.
2. Disconnect illumination lamp lead wire at connector.
3. Straighten nails of cover and pull bulb out of socket.
4. Install new bulb in the reverse sequence of removal.

Bulb wattage:

Cigarette lighter illumination bulb 1.7W

REMOVAL AND INSTALLATION

1. Remove battery ground cable.
2. Remove lighter from housing.
3. Remove horn pad.
4. Remove tachometer. Refer to page BE-39 for Removal.
5. Disconnect three cigarette lighter lead wires at connectors through hole in which tachometer is installed.
6. Remove retaining nut at bottom of cigarette lighter.

Housing and housing cover can then be taken out from instrument panel.

7. Installation is in the reverse sequence of removal.

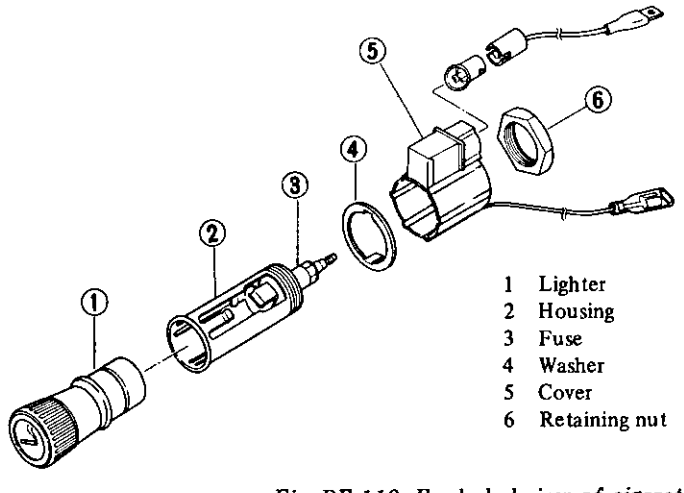

Fig. BE-119 Exploded view of cigarette lighter

INSPECTION

Test continuity of the entire system with test lamp or ohmmeter. Refer to cigarette lighter circuit diagram as a guide.

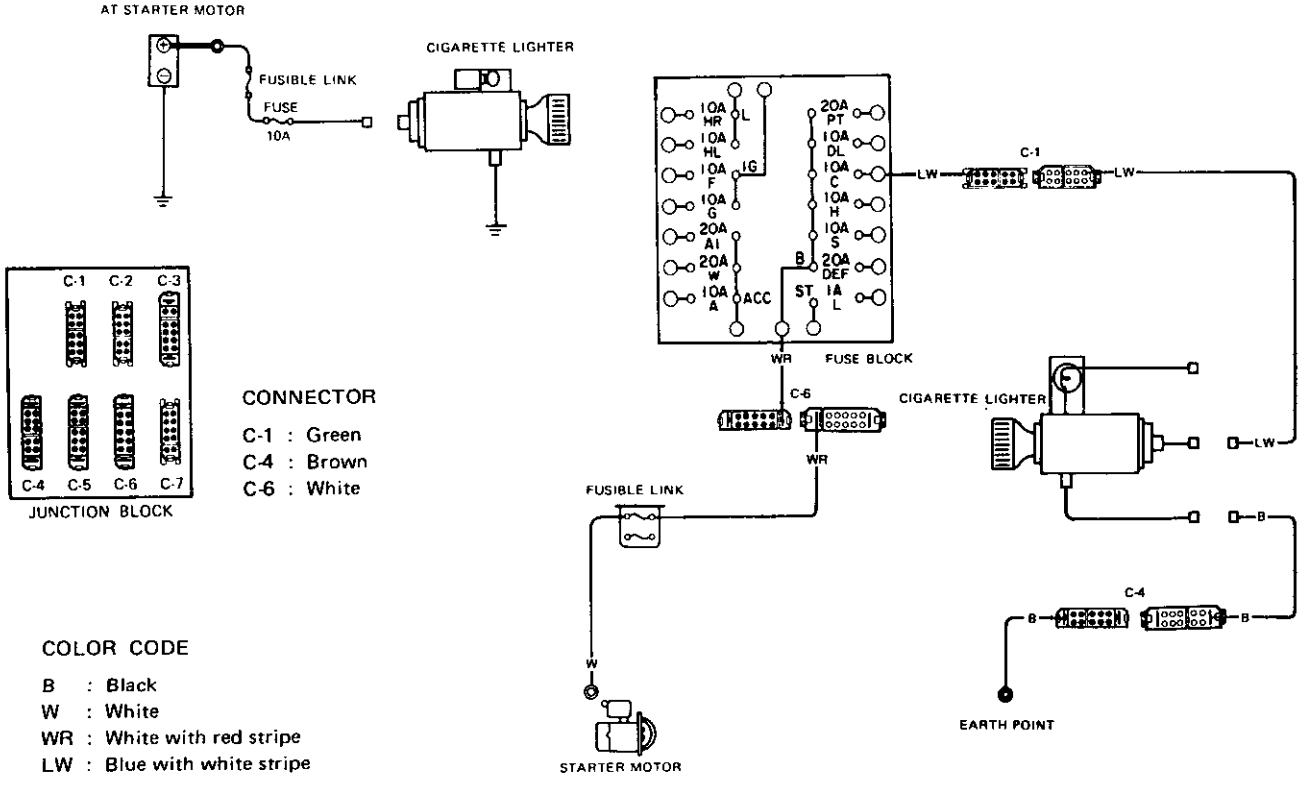

Fig. BE-120 Circuit diagram for cigarette lighter

CLOCK

DESCRIPTION

The clock is installed on instrument panel; removal procedure is the same as for the other two gauges. It has a connector with four terminals. The illumination bulb can be easily taken out by pulling socket from back of clock.

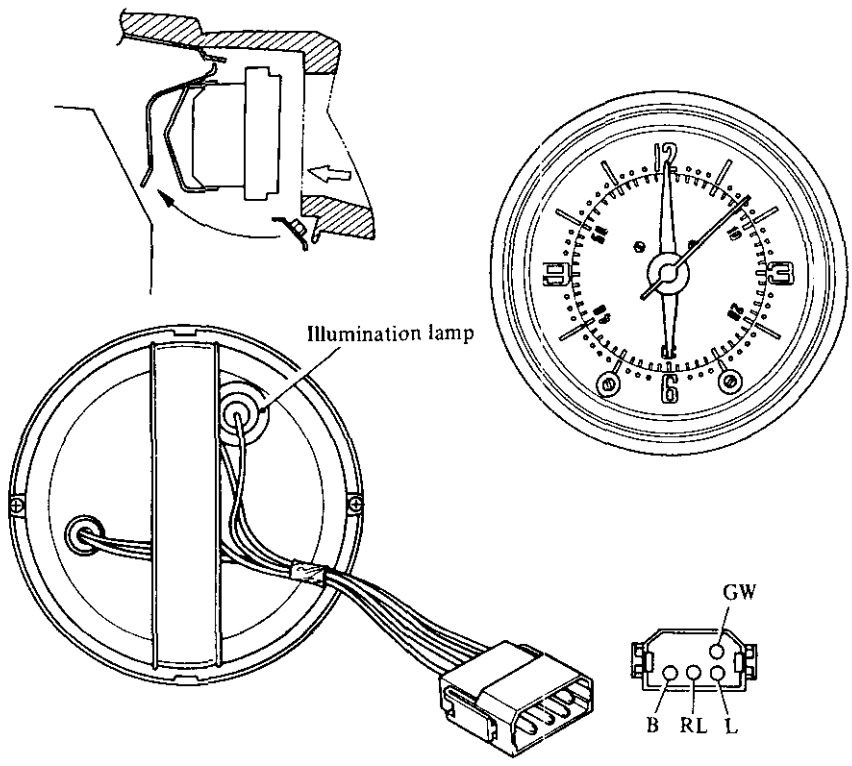

BE152A

Fig. BE-121 Clock

REPLACEMENT

Clock

1. Remove four screws retaining instrument finisher to instrument panel. Take out instrument finisher a little and disconnect two connectors. Instrument finisher can then be taken out. See Figure BE-82.
2. Remove six screws retaining three-way venti-duct to instrument panel.
3. Disconnect duct hoses from three-way duct and take out three-way duct.
4. Remove screw retaining clock to instrument panel.

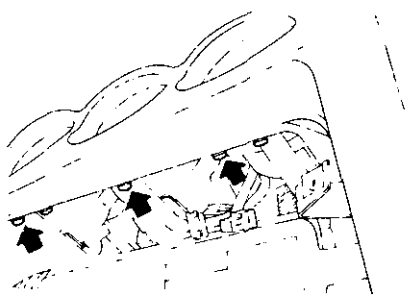

BE117A

Fig. BE-122 Removing clock retaining screw

5. Take out clock backward and disconnect lead wires at connector. Clock can then be taken out.

Bulb replacement

The illumination bulb can be easily taken out by pulling socket with bulb at back of clock.

Remove bulb from socket and install new bulb.

Assemble in reverse sequence of removal.

Bulb wattage:

Clock illumination bulb . . 3.4W

INSPECTION

Test continuity and operation of each unit with ohmmeter or test lamp. Refer to Figure BE-123 for wiring diagram of clock.

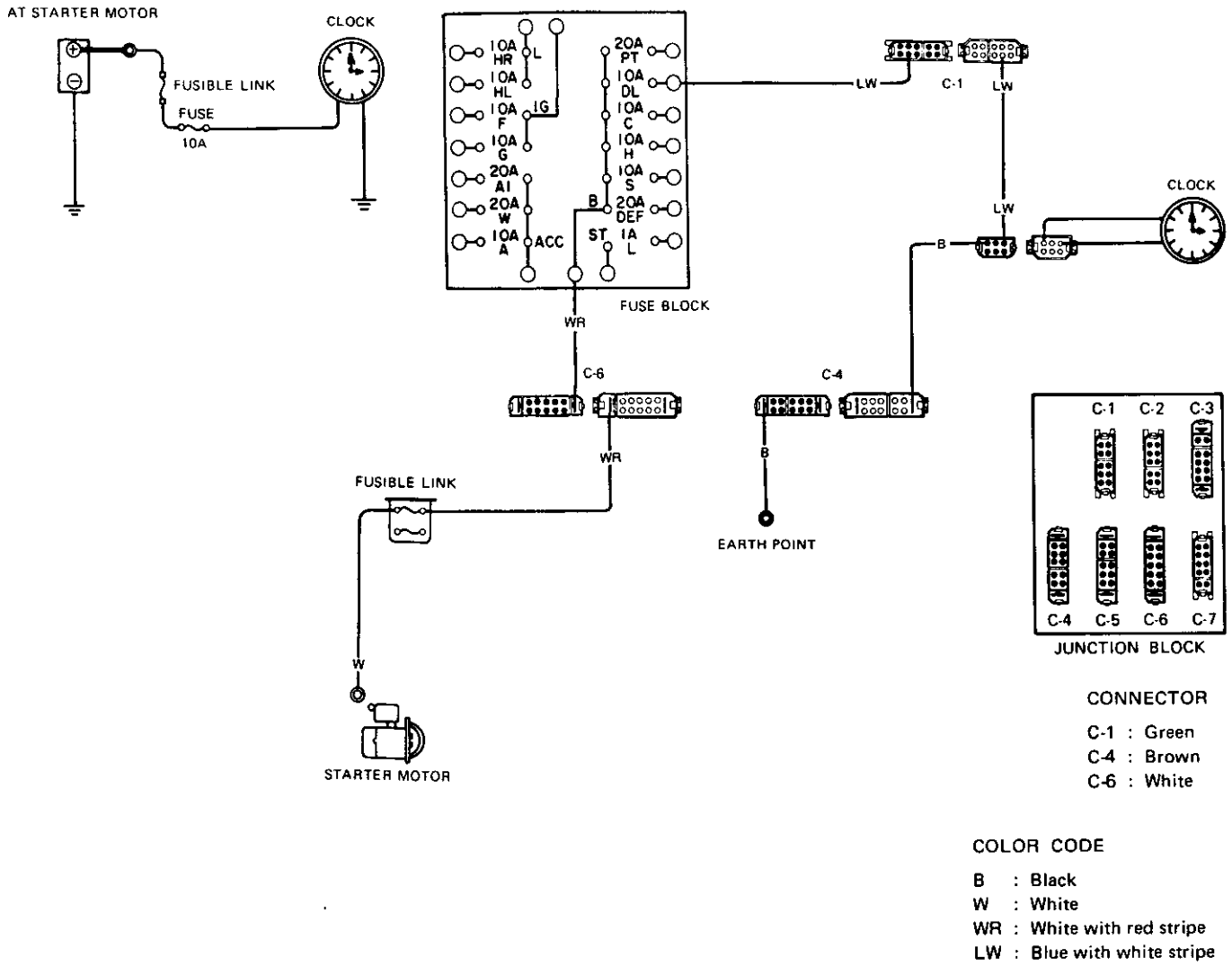

Fig. BE-123 Circuit diagram for clock

ELECTRIC REAR WINDOW DEFOGGER

DESCRIPTION

The electric rear window defogger system consists of a defogger switch, a defogger relay, a defogger warning lamp and a filament in the rear window glass.

The filament is attached inside rear window. Heat from filament keeps rear window free of fog and frost.

Defogger relay is located on relay bracket.

Defogger switch and warning lamp are installed on console box.

REMOVAL AND INSTALLATION

Defogger switch, warning lamp

Defogger switch is held against console box by spring pressure.

1. Disconnect battery ground cable.
2. Remove console box, referring to Section BF.
3. From behind console box, grasp nail of switch body and push it out of console box.
4. Disconnect lead wires at a connector.
5. Installation is in the reverse sequence of removal.

Note: In installing, switch body can be installed on console box only by pressing it in.

Defogger relay

Defogger relay is located on relay bracket.

1. Remove battery ground cable.
2. Disconnect lead wires for defogger relay at a connector.
3. Remove two screws retaining relay to relay bracket.

Relay can then be taken out easily.

4. Installation is in the reverse sequence of removal.

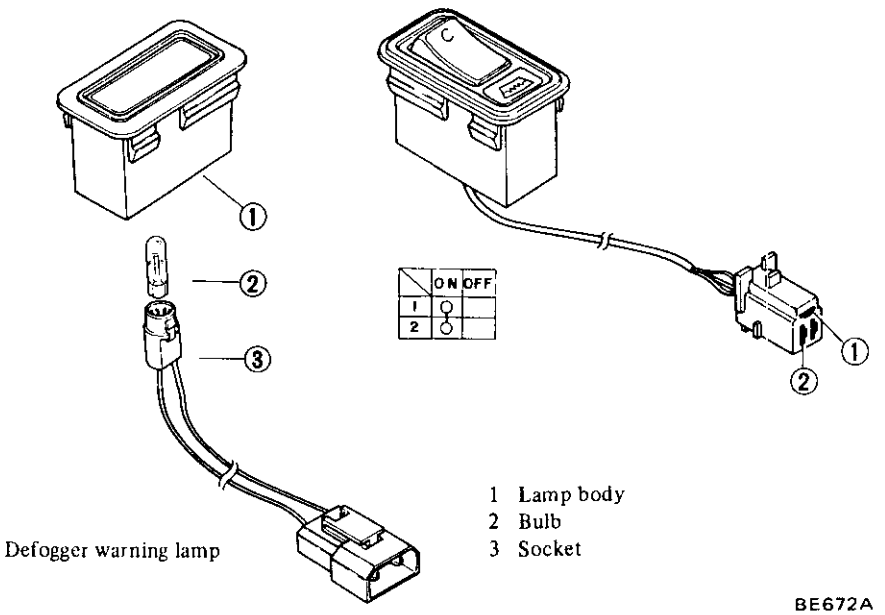

Fig. BE-124 Defogger switch nd warning lamp

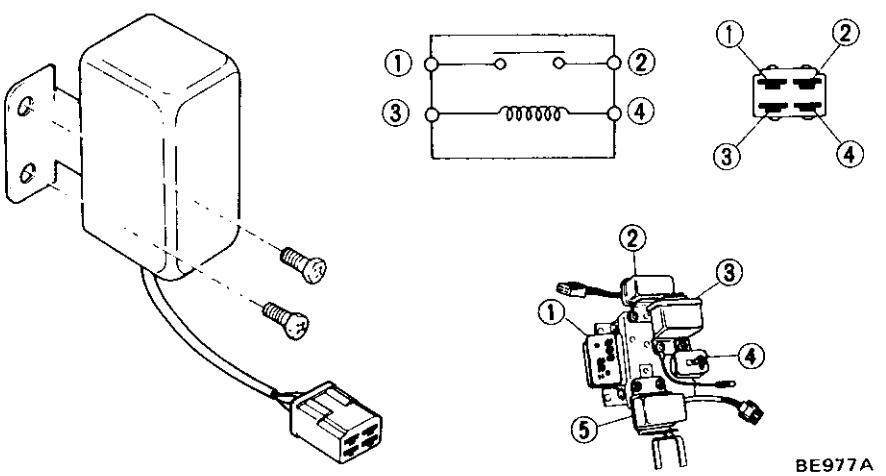

1 Intermittent wiper amplifier
2 Rear defogger relay
3 Ignition relay
4 Horn relay
5 Timer unit

Fig. BE-125 Defogger relay

WARNING LAMP BULB REPLACEMENT

1. Remove console box, referring to Section BF.
2. Push socket with bulb behind warning lamp body and twist it counterclockwise.

   Socket with bulb can then be taken out.
3. Remove bulb from socket.
4. Install new bulb. Assembly is in the reverse sequence of removal.

Bulb wattage:

Rear window defogger warning lamp 1.4W

INSPECTION

Defogger switch

Test continuity of switch by using test lamp or ohmmeter. Test must be carried out with switch at both ON and OFF. Refer to Figure BE-124 continuity diagram of defogger switch.

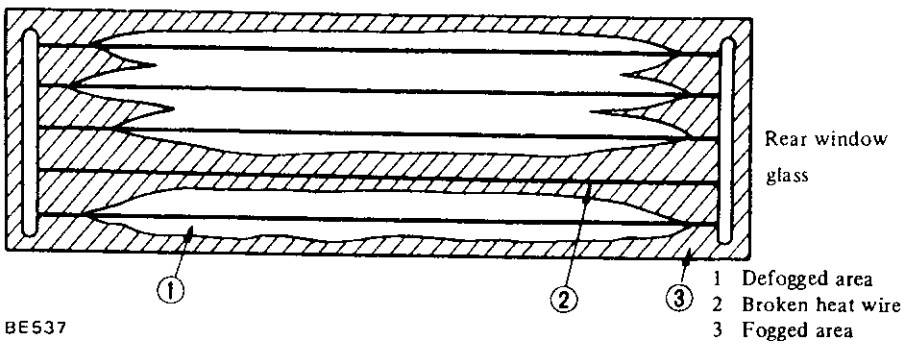

Fig. BE-126 Broken filament

Defogger relay

Test continuity of relay with ohmmeter or test lamp. Refer to Figure BE-125 for defogger relay. In testing relay, there must be continuity between ③-④. When 12V direct current is applied to ③-④, there must be continuity between ①-②.

Rear window filaments

Rear window defogger filament can be inspected for circuit breaks by one of three methods.

Method 1:

Start engine and turn on window defroster system. If area around a specific filament is not defogged, that line is broken.

Method 2:

Start engine and turn on window defroster system. With a direct-current voltmeter setup shown in Figure BE-127, check each heat wire for discontinuity. If meter indicates 12 volts or 0 on a specific wire, that line is broken. (Normal indication: 6 volts)

Break in that line can then be detected by moving positive lead of meter along line until an abrupt variation in meter indication is encountered.

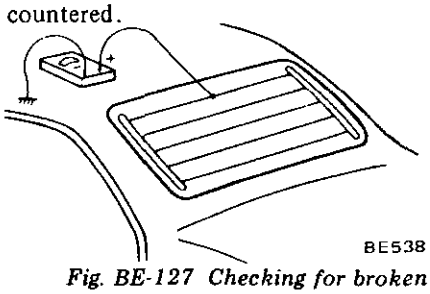

Fig. BE-127 Checking for broken filament with d–c voltmeter

Method 3:

With an ohmmeter setup shown in Figure BE-128, place one lead at one end of a heat wire and other in middle section of that wire. If meter registers, on a specific grind line, a value twice as much as on any other line, that line is broken.

Break in that line can then be located by an abrupt variation in meter indication as test lead moves along broken heat wire.

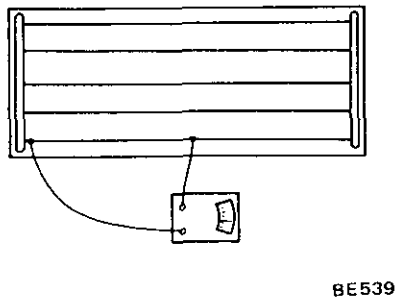

Fig. BE-128 Checking for broken filament with ohmmeter

FILAMENT MAINTENANCE

Repair equipment

1. Conductive silver composition (Dupont No. 4817)
2. Ruler, 30 cm (12 in) long
3. Drawing pen
4. Heat gun
5. Alcohol
6. Cloth

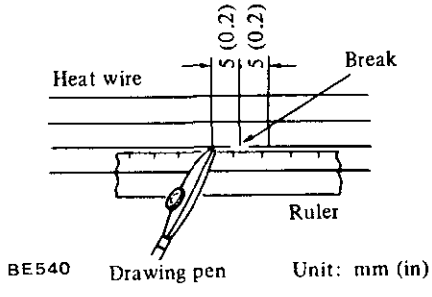

Fig. BE-129 Locating ruler in position

Repair procedure

1. Wipe broken heat wire and its surrounding area clean with a cloth dampened in alcohol.
2. Apply a small amount of conductive silver composition to tip of drawing pen.

Note: Shake silver composition container before use.

3. Place ruler on glass along broken line to be repaired as shown in Figure BE-129. Deposit conductive silver composition on break with drawing pen. Slightly overlap existing heat wire on both sides [5 mm (0.197 in) preferably] of the break.
4. Wipe clean silver composition from tip of drawing pen.
5. After repair has been completed, check repaired wire for continuity. This check should be conducted 10 minutes after silver composition is deposited.

Note: Do not touch repaired area while test is being conducted.

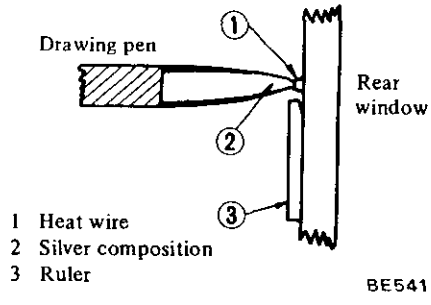

Fig. BE-130 Depositing silver composition in place

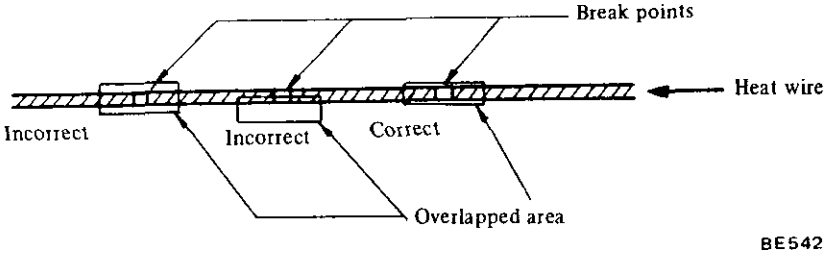

Fig. BE-131 Incorrect and correct deposition of silver composition

6. Apply a constant stream of hot air directly to the repaired area for approximately 20 minutes with a heat gun. A minimum distance of 3 cm (1.18 in) should be kept between repaired area and hot air outlet. If a heat gun is not available, leave the repaired area unattended for 24 hours.

Instruction after repair

Wiper repaired area clean with a soft, clean cloth.

Note: Do not use a cleaning solvent containing much soapy water.

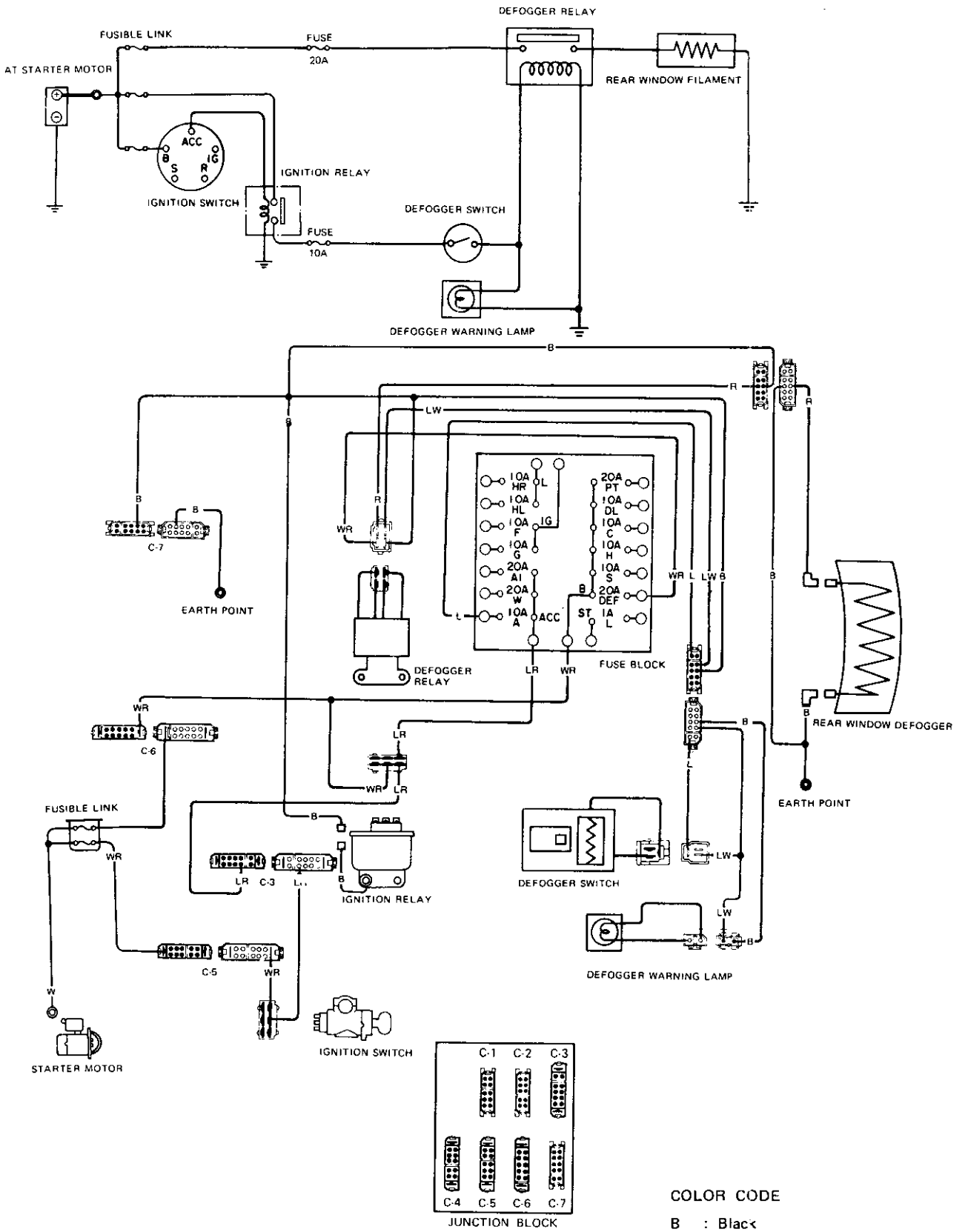

CONNECTOR

C-3 : Black
C-5 : Green
C-6 : White
C-7 : Black

COLOR CODE

B : Black
W : White
WR : White with red stripe
R : Red
L : Blue
LW : Blue with white stripe
LR : Blue with red stripe

BE036B

Fig. BE-132 Circuit diagram for rear window defogger

RADIO

DESCRIPTION

The radio system consists of an antenna, a speaker, a radio receiver and an antenna switch.

Antenna is connected to radio receiver with feeder cable. Speaker is connected to radio receiver with pair of speaker harnesses. Radio receiver is installed on console box.

Speaker is installed behind L.H. side body rear trim.

Antenna trimmer adjustment is required for best radio performance.

A fuse is added on harness midway from ignition switch.

Antenna switch is installed on radio receiver.

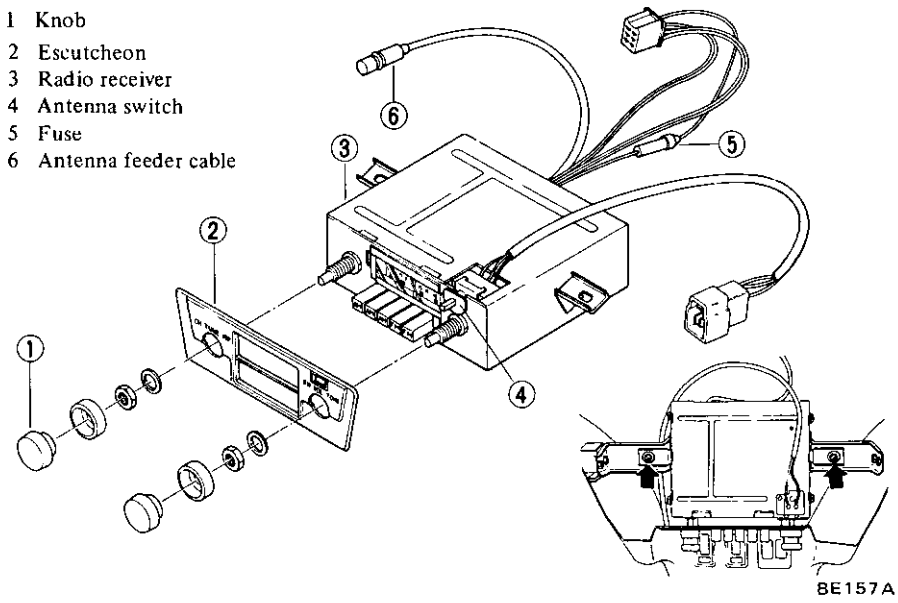

Fig. BE-133 Removing radio receiver

REMOVAL AND INSTALLATION

Radio receiver

1. Remove console box, referring to Section BF.
2. Disconnect lead wires for radio and antenna switch at two connectors. Feeder cable is also removed.
3. Pull out dials on radio receiver and remove two nuts retaining escutcheon to radio receiver.
4. Remove two screws retaining radio receiver to console box. Radio receiver can then be taken out.
5. Installation is in the reverse sequence of removal.

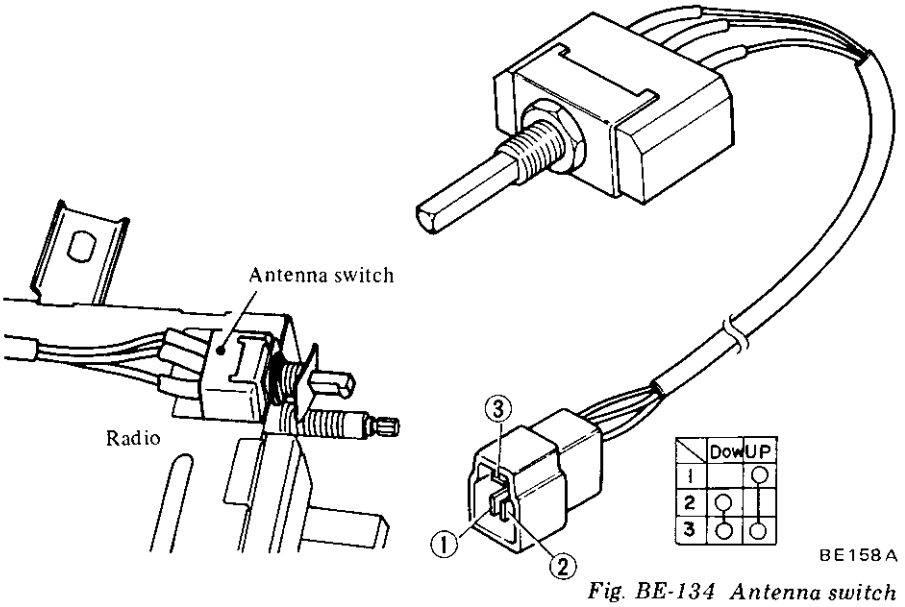

Fig. BE-134 Antenna switch

Antenna switch

1. Remove console box and escutcheon as previously described.
2. Remove antenna switch retaining screw and switch can then be taken out from radio receiver.
3. Installation is in the reverse sequence of removal.

Antenna

1. Remove antenna upper retaining nut and remove retainer from outside of rear fender.
2. Remove side body rear panel and disconnect lead wires at connectors.

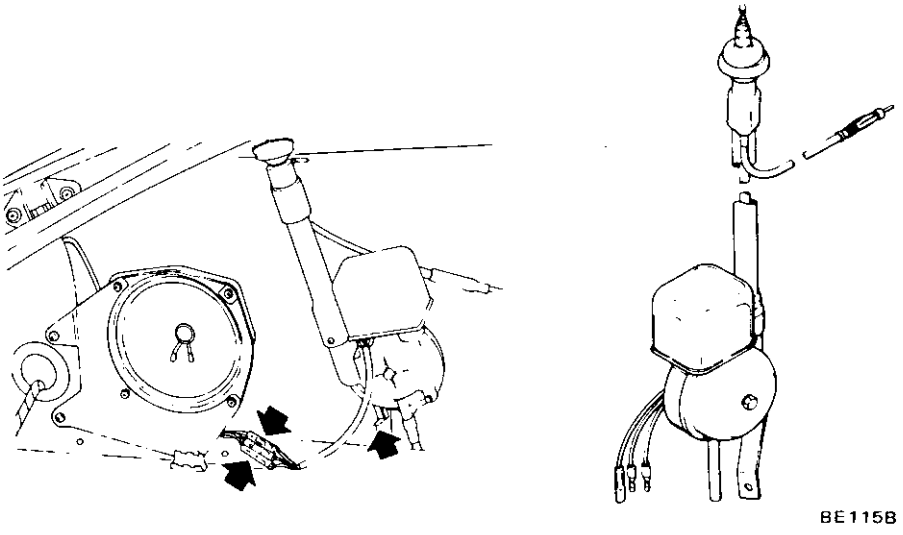

Fig. BE-135 Antenna

3. Remove bolt retaining antenna bracket to body panel. Antenna can then be taken out.

4. Installation is in reverse sequence of removal.

Speaker

1. Remove side body rear panel and disconnect lead wires at connectors.
2. Remove speaker mounting bracket retaining screws.

Bracket with speaker and speaker hood can then be taken out.

3. Remove hood from bracket and take out speaker.
4. Installation is in the reverse sequence of removal.

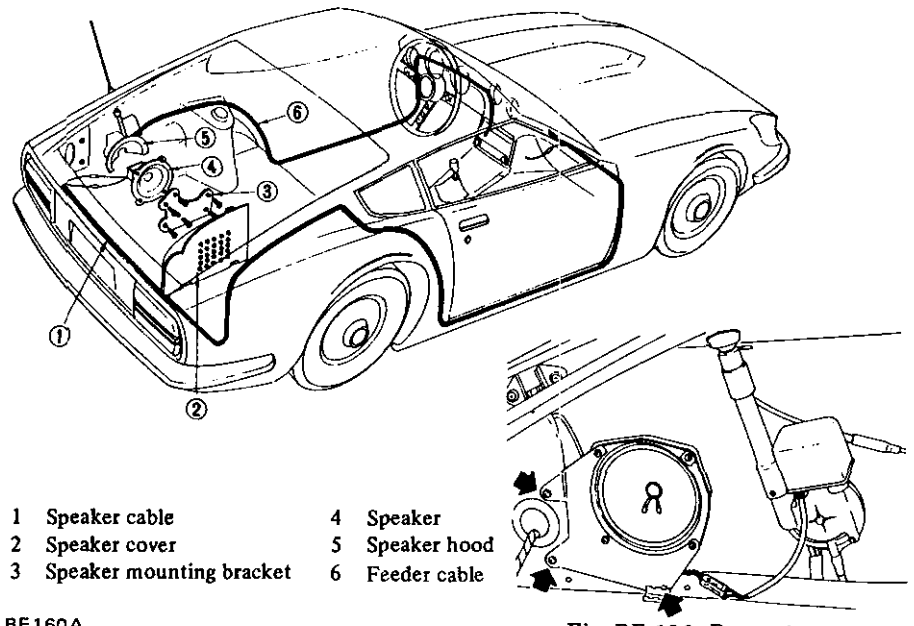

1 Speaker cable
2 Speaker cover
3 Speaker mounting bracket
4 Speaker
5 Speaker hood
6 Feeder cable

BE160A

Fig. BE-136 Removing speaker

ANTENNA TRIMMER ADJUSTMENT

When a new radio receiver, antenna or antenna feeder cable is installed, antenna trimmer should be adjusted.

1. Extend antenna completely.
2. Tune in weakest station between 12 and 16 (1,200 to 1,600 Hz) on dial.

Note: Noise may be generated but disregard it.

3. Turn antenna trimmer to right and left slowly with screwdriver and set it where receiving sensitivity is best.

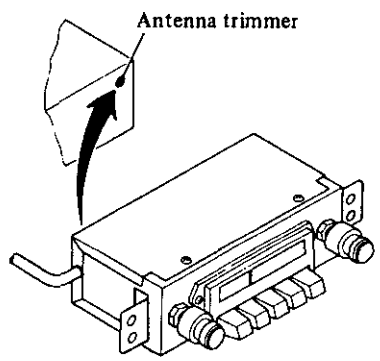

CLARION-make radio

BE572

Fig. BE-137 Trimmer adjust screw

INSPECTION

If radio does not work, test continuity through the system with ohmmeter or test lamp. When testing, refer to Figure BE-134 for continuity diagram of antenna switch and Figure BE-138 for wiring diagram of radio system.

If noise is generated, refer to Noise Prevention Chart.

Notes:

When installing wireless telegraph, pay attention to the following items.

a. Be sure to separate antenna cable more than 2 inches (50.8 mm) from electronic fuel injection control unit and transistor ignition unit.

b. Make sure that radio interference does not cause engine malfunction.

TROUBLE DIAGNOSES AND CORRECTIONS

Noise prevention chart

Position car in an open area away from steel buildings, run engine, extend antenna to its maximum length, set volume control to maximum and set dial at a medium point without catching broadcasting wave.

Condition	Probable cause	Corrective action
Ignition system		
Noise occurs when engine is operated.	High tension cable	Install new high tension cable.
	Ignition coil.	Install a 0.5μF capacitor to primary side + terminal of ignition coil. **Note: Be careful not to install capacitor to secondary or primary breaker side, otherwise engine operation becomes improper.**
Charging system.		
Sound of alternating current present.	Alternator.	Install a 0.5μF capacitor to charging terminal A. **Note: Do not use a larger capacitor.** **If capacitor is installed to terminal F, alternator coil will be damaged.**
When accelerator pedal is depressed or released, noise occurs.	Regulator.	Install a 0.5μF capacitor to "IGN" terminal of voltage regulator.
Fuel system		
When ignition switch is set to "ON" noise occurs.	Electric fuel pump.	Install a 0.5μF capacitor to power lead connector plug of electric fuel pump.

Notes:

a. Be sure to locate capacitor as close to noise source as possible and connect in parallel.

b. Cut lead wire as short as possible.

c. Ground wire should be attached securely to body.

d. Make installation and connections securely.

e. Carefully identify "+", "–", "IN" or "OUT" marks.

Radio system

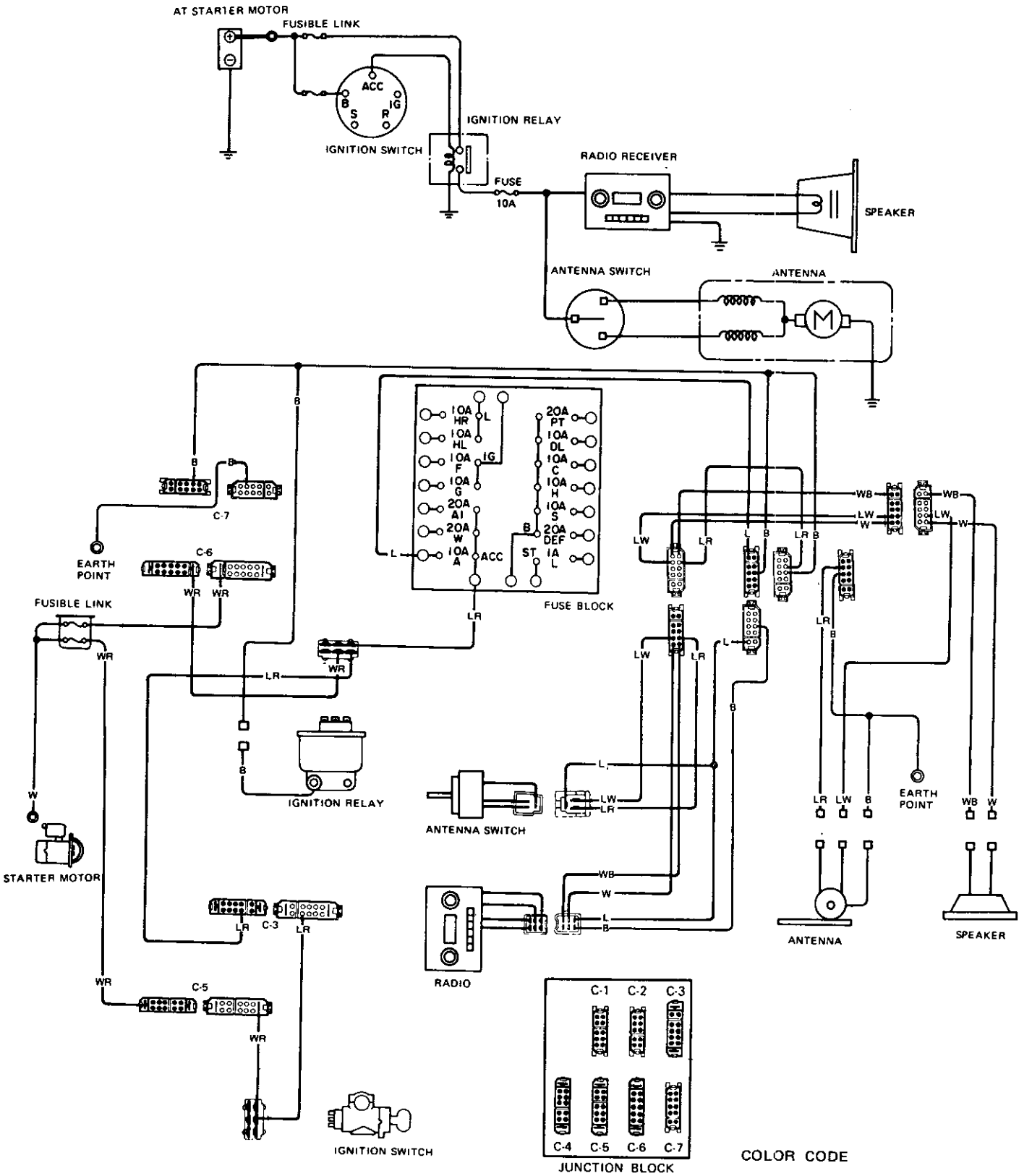

CONNECTOR

C-3 : Black
C-5 : Green
C-6 : White
C-7 : Black

COLOR CODE

B : Black
W : White
WR : White with red stripe
WB : White with black stripe
L : Blue
LW : Blue with white stripe
LR : Blue with red stripe

BE037B

Fig. BE-138 Circuit diagram for radio and antenna

THEFT PROTECTION SYSTEM

DESCRIPTION

This system consists of an ignition switch, a door switch and a buzzer and is designed to prevent driver from leaving car without taking key. When L.H. door is opened with ignition key still in ignition switch, buzzer sounds.

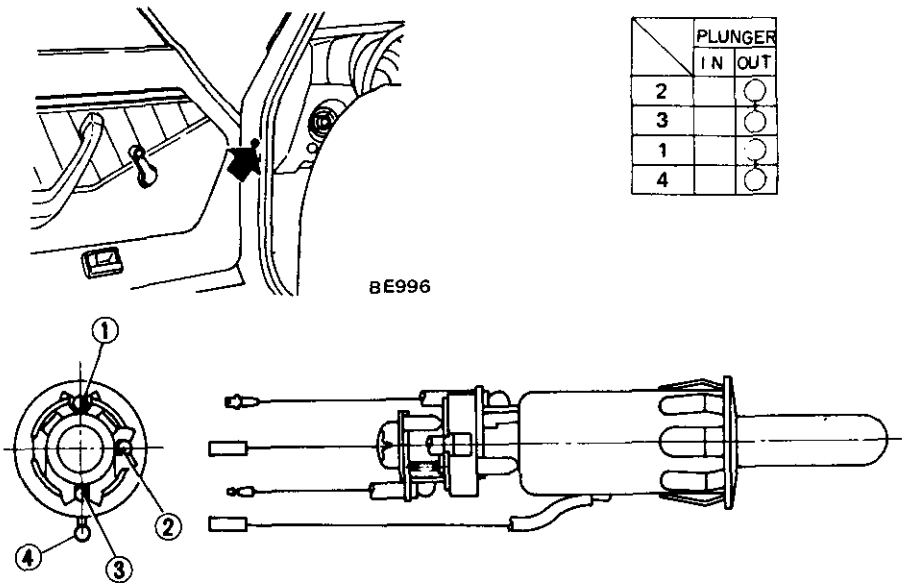

Fig. BE-139 Door switch

REMOVAL AND INSTALLATION

Door switch

Door switch is located on L.H. front door pillar.

1. Withdraw switch and wire assembly from front pillar.
2. Disconnect lead wire at connectors, switch can then be taken out.
3. Installation is in the reverse sequence of removal.

Ignition switch

To make switch tamper-proof, self-shear type screws are used. Their heads are sheared off when installed so that the steering lock system cannot be easily removed.

When required, replace the steering lock in accordance with the following instructions.

Break self-shear type screws with a drill or other proper tool, then remove the steering lock from the steering lock clamp.

When installing a new steering lock, be sure to tighten new self-shear type screws until their heads shear off.

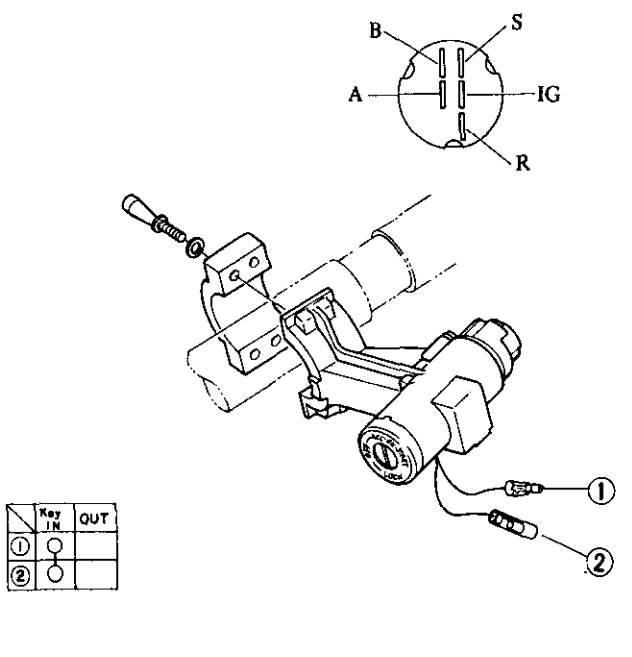

Fig. BE-140 Ignition switch

Warning buzzer

The warning buzzer is installed behind speedometer on bracket from instrument panel.

1. Disconnect battery ground cable.
2. Remove speedometer as described in page BE-40 for Meter and Gauge Replacement.
3. Disconnect buzzer lead wires at a connector.
4. Remove screw retaining buzzer assembly to bracket through the hole in which speedometer is installed.
5. Buzzer assembly can then be taken out.
6. Installation is in the reverse sequence of removal.

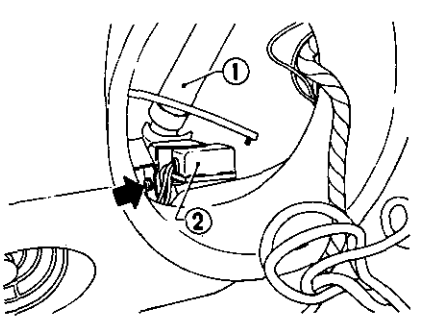

1 Instrument harness
2 Warning buzzer

BE163A

Fig. BE-141 Removing buzzer

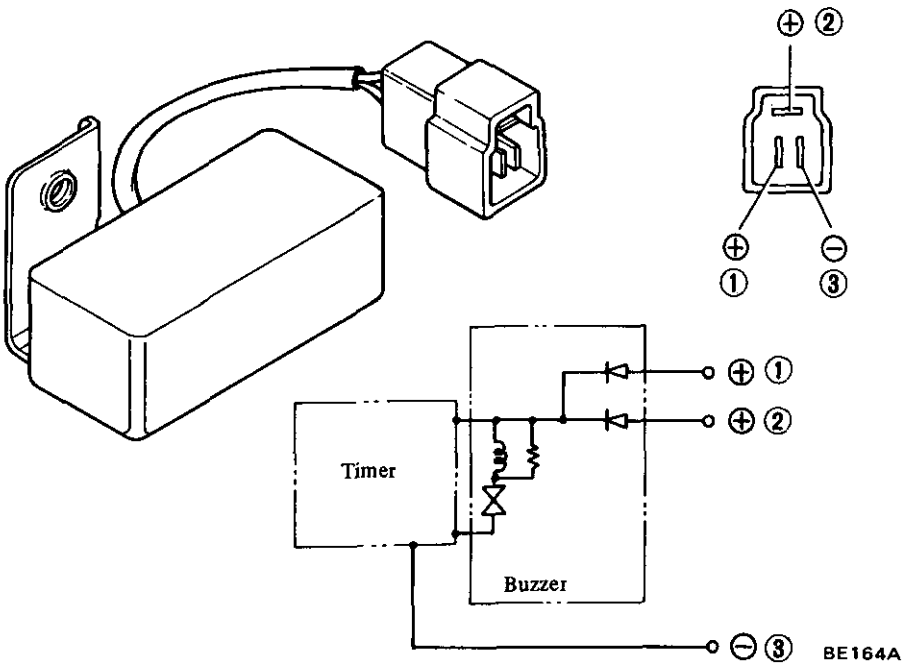

Fig. BE-142 Buzzer

INSPECTION

Door switch

There are three lead wires from door switch. Two are for warning buzzer and other is for room lamp.

Inspect continuity through door switch with test lamp or ohmmeter. When plunger is pressed into switch assembly, door switch contacts are opened. Contacts are closed when plunger is projected. See Figure BE-139 door switch.

Warning buzzer

Apply 12V direct current between ①–③ or ②–③ and check whether buzzer sounds or not. The buzzer must sound when ①–③ and ②–③ are connected to power circuit. See Figure BE-142 warning buzzer.

Note: Make sure that ⊖ negative terminal of power circuit is always connected to ③ terminal.

Ignition switch

Test continuity between two harnesses ①–② indicated in Figure BE-140. There must be continuity when key is inserted into switch. On the other hand, continuity must be broken, when key is removed from ignition switch.

Circuit

Test continuity through the circuit with ohmmeter or test lamp. The whole circuit is described below in detail.

Theft protection system

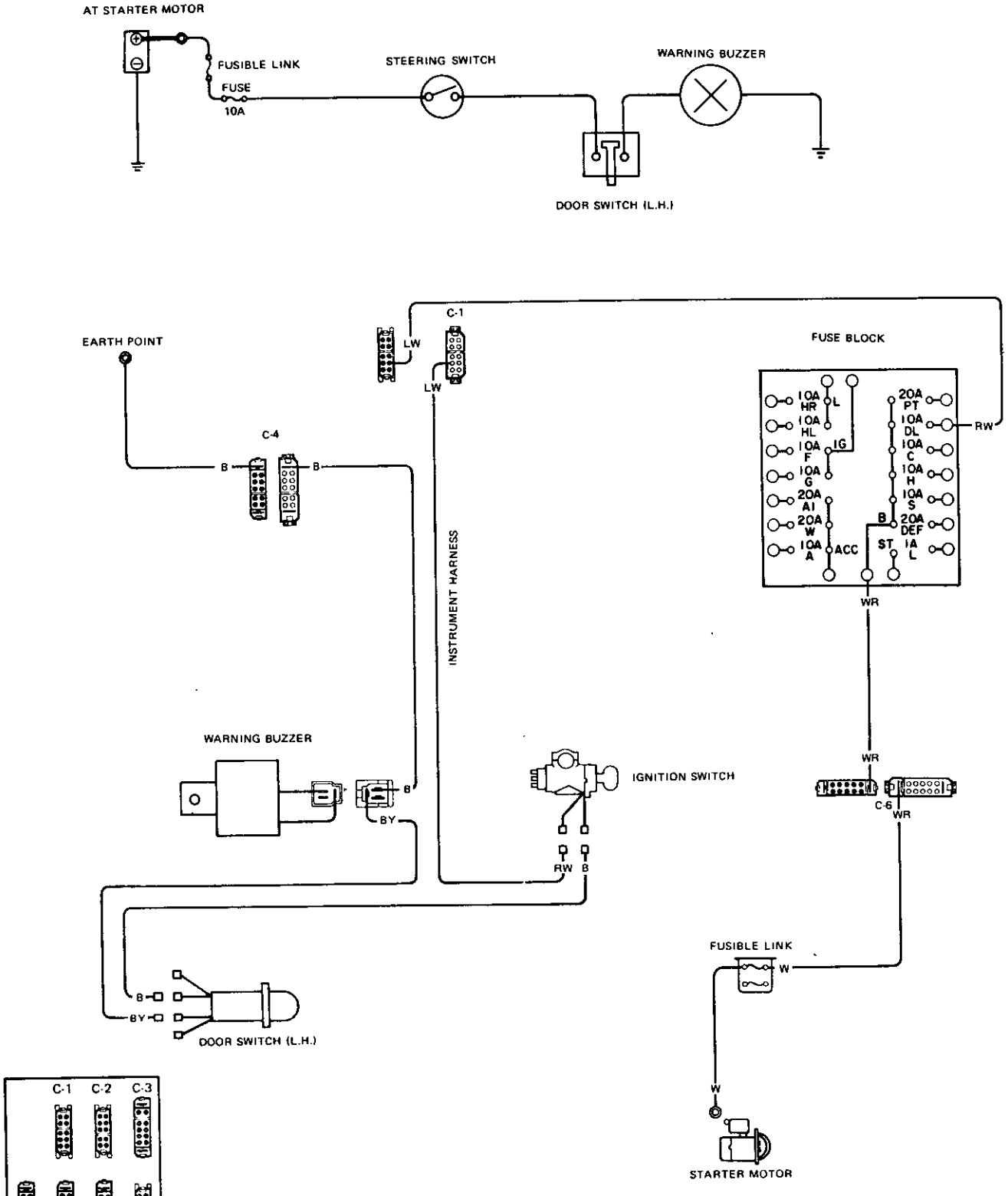

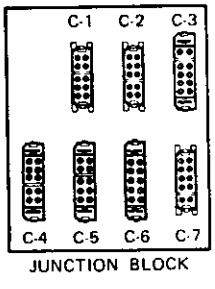

CONNECTOR

C-1 : Green
C-4 : Brown
C-6 : White

COLOR CODE

B : Black
BY : Black with yellow stripe
W : White
WR : White with red stripe
RW : Red with white stripe
LW : Blue with white stripe

BE038B

Fig. BE-143 Circuit diagram for theft protection system

SEAT BELT WARNING SYSTEM

DESCRIPTION

Except Canada

This system consists of an ignition switch, a timer unit, a warning light, a driver's belt switch and a buzzer and is designed to remind the occupants to buckle their seat belts. When the ignition switch is turned to the START position, the seat belt warning light remains on for 4 to 8 seonds. If the driver's seat belt is not securely fastened, the warning buzzer sounds for 4 to 8 seconds. The buzzer is also used as a theft warning buzzer.

For Canada

This system consists of an ignition switch, a driver's belt switch, a warning light and a buzzer. If the ignition switch is turned on when the driver's seat belt is not fastened securely, the warning light remains on and buzzer sounds. When the driver's seat belt is fastened securely, the warning light and buzzer go out.

REMOVAL AND INSTALLATION

Ignition switch and warning buzzer

Refer to pages BE-28 and BE-81 for Removal and Installation.

Timer unit

1. Disconnect all connectors from junction block and remove junction block from bracket.

Disconnect lead wires for timer unit at a connector.

2. Remove two screws retaining timer unit.

Timer unit can then be taken out easily.

3. Installation is in the reverse sequence of removal.

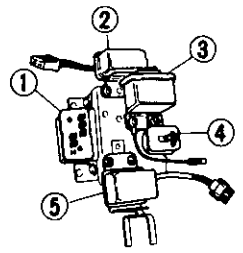

1 Intermittent wiper amplifier
2 Rear defogger relay
3 Ignition relay
4 Horn relay
5 Timer unit

BE977A

Fig. BE-144 Timer unit

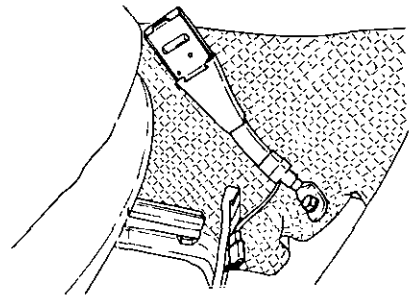

BE176A

Fig. BE-145 Seat belt switch

Driver's seat belt switch

The belt switch is an integral part of the inner lap belt so the switch and seat belt must be replaced as an assembly.

1. Slide seat all the way forward.
2. Remove seat belt securing bolt.
3. Disconnect lead wires at connector.
4. Seat belt can then be taken out.
5. Installation is in the reverse sequence of removal.

Warning lamp body

1. Remove console box. Refer to Section BF.
2. From behind console box, grasp nail of lamp body and push it out of console box.
3. Disconnect lead wires at connector.
4. Installation is in the reverse sequence of removal.

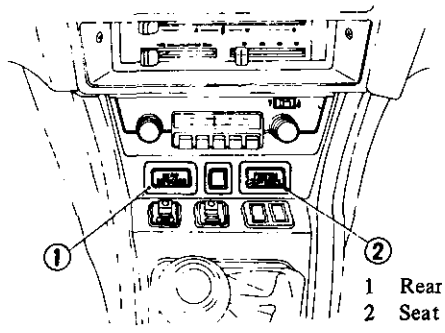

BE039B

1 Rear defogger warning lamp
2 Seat belt warning lamp

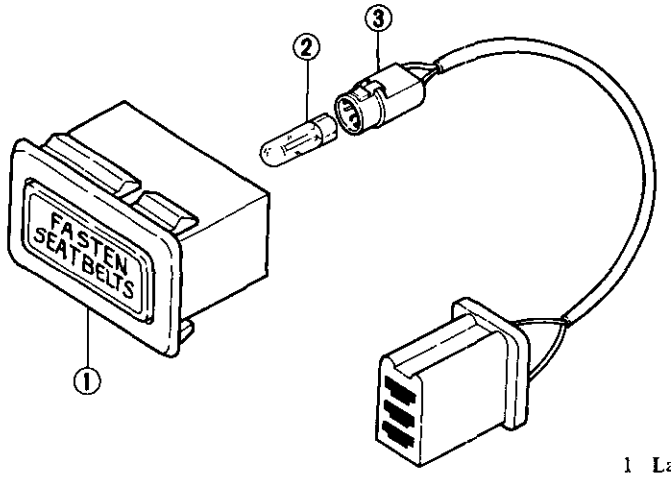

BE641A

1 Lamp body
2 Bulb
3 Socket

Fig. BE-146 Seat belt warning lamp

WARNING LAMP BULB REPLACEMENT

1. Remove console box. Refer to Section BF.
2. Push socket and bulb behind warning lamp body and twist it counterclockwise. Socket and bulb can then be taken out as an assembly.
3. Remove bulb from socket.
4. Install new bulb in the reverse sequence of removal.

Bulb wattage:
Seat belt warning lamp 1.4W

INSPECTION

Warning buzzer

Refer to page BE-142 for Warning Buzzer Inspection.

Timer unit

1. Connect terminal ① to positive terminal of battery, and terminal ③ to negative terminal.
2. Connect test lamp between terminal ② and negative terminal of battery.
3. Contact terminal ④ to positive terminal of battery, and then detach it.
4. Test lamp should remain on for 4 to 8 seconds and then go out.

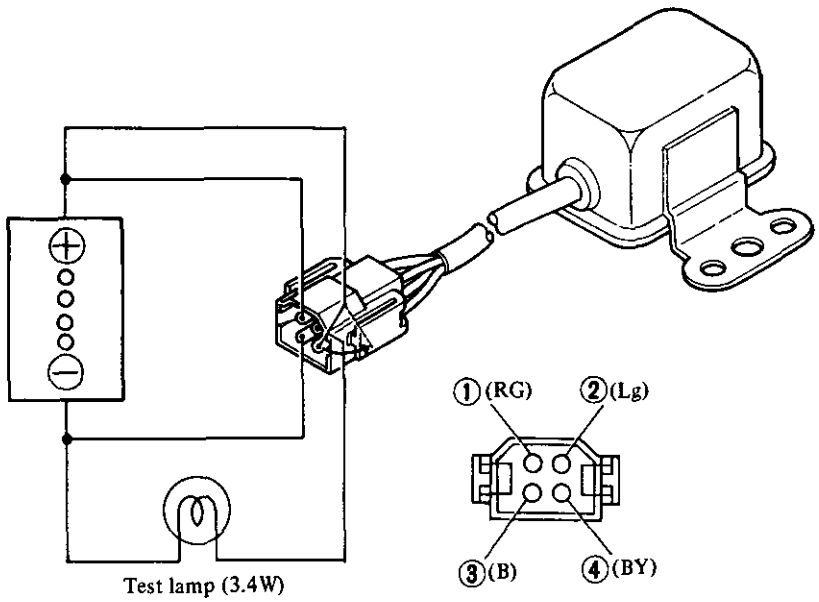

Fig. BE-147 Inspecting timer unit

Belt switch

Test continuity between two lead wires from seat belt switch with ohmmeter or test lamp.

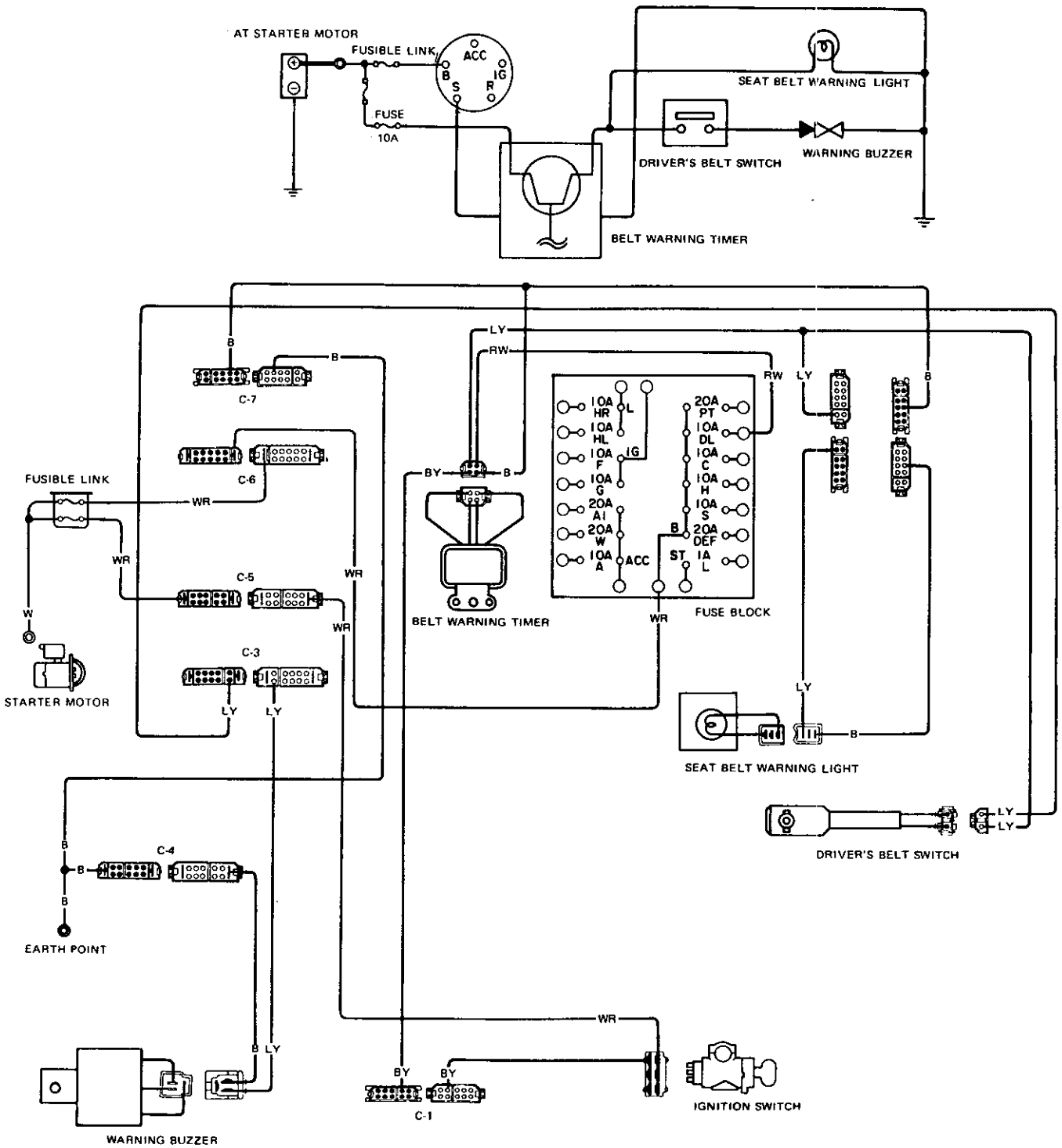

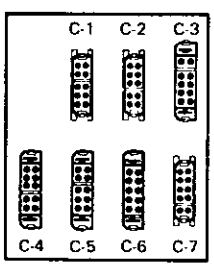

JUNCTION BLOCK

CONNECTOR

C-1 : Green
C-3 : Black
C-4 : Brown
C-5 : Green
C-6 : White
C-7 : Black

COLOR CODE

B : Black
BY : Black with yellow stripe
W : White
WR : White with red stripe
RW : Red with white stripe
LY : Blue with yellow stripe

BE041B

Fig. BE-148 Circuit diagram for seat belt warning system except Canada

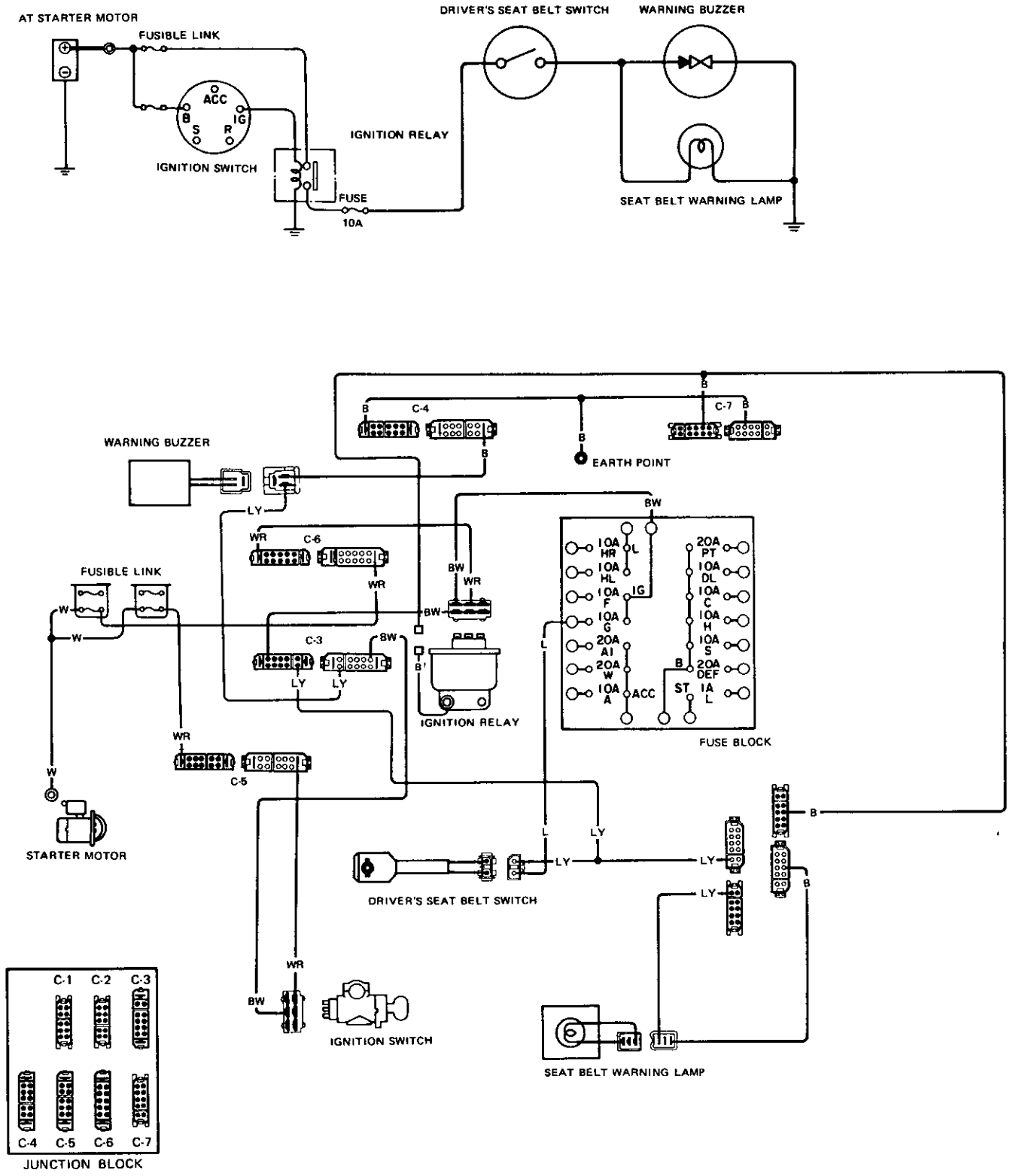

CONNECTOR

C-3 : Black
C-4 : Brown
C-5 : Green
C-6 : White
C-7 : Black

COLOR CODE

B : Black
BW : Black with white stripe
W : White
WR : White with red stripe
L : Blue
LY : Blue with yellow stripe

BE042B

Fig. BE-149 Circuit diagram for seat belt warning system for Canada

KICKDOWN SYSTEM (For automatic transmission models only)

DESCRIPTION

The kickdown system consists of a kickdown switch and a kickdown solenoid. Kickdown switch is located on the accelerator pedal. Kickdown solenoid is located on left side of automatic transmission. They are connected to each other. For details on automatic transmission, refer to section Automatic Transmission.

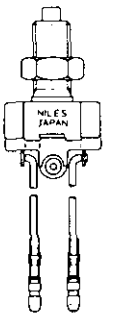

BE776

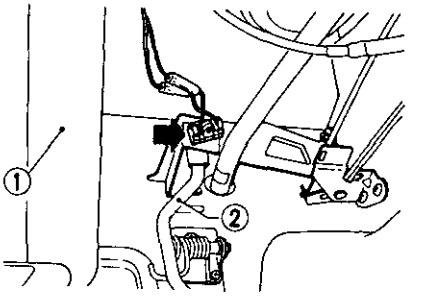

1 Steering column
2 Accelerator pedal rod

BE116A

Fig. BE-150 Kickdown switch

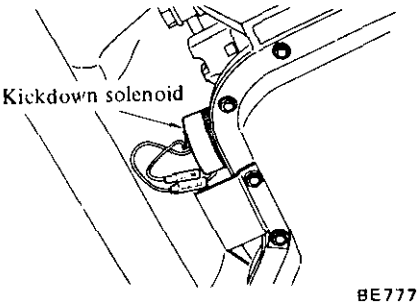

BE777

Fig. BE-151 Kickdown solenoid

REPLACEMENT

Kickdown switch

1. Disconnect pair of lead wires.
2. Loosen lock nut on switch body.
3. Remove kickdown switch by rotating switch body.
4. Install in reverse sequence of removal.

Kickdown solenoid

Refer to Section AT for Removal of Kickdown Solenoid.

INSPECTION

Kickdown switch

The switch plunger is controlled by accelerator pedal. When plunger is pressed into switch assembly, contacts are closed.

Therefore there must be continuity only when plunger is pressed into switch body.

Kickdown solenoid

Refer to Section AT for Inspection of Kickdown Solenoid.

Wiring

Referring to following circuit diagram, test continuity with ohmmeter or test lamp.

Kickdown system

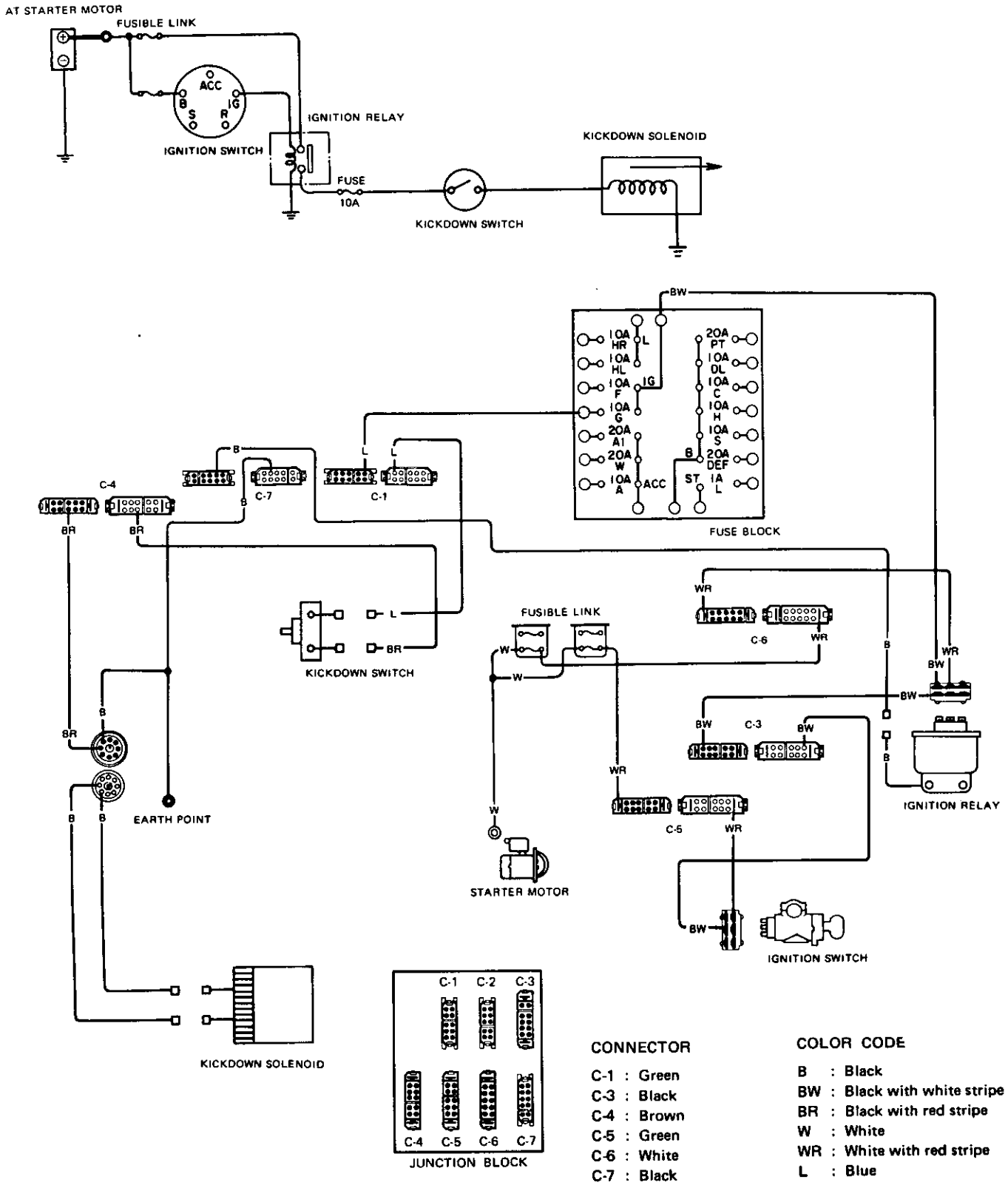

BE043B

Fig. BE-152 Circuit diagram for kickdown system

STARTING SYSTEM (For automatic transmission models only)

DESCRIPTION

The starting system consists of an ignition relay, an inhibitor switch and a seat belt relay (starter relay).

The inhibitor switch is located on right side of automatic transmission case. The seat belt relay is located on the engine compartment relay bracket.

REPLACEMENT

Inhibitor switch

Refer to Section AT.

Seat belt relay (Starter relay)

1. Disconnect battery ground cable.
2. Disconnect lead wires from relay at a connector.
3. Remove four screws retaining relay bracket to hoodledge panel and remove relay bracket.
4. Remove two screws retaining relay to relay bracket. Relay can then be taken out.
5. Installation is in the reverse sequence of removal.

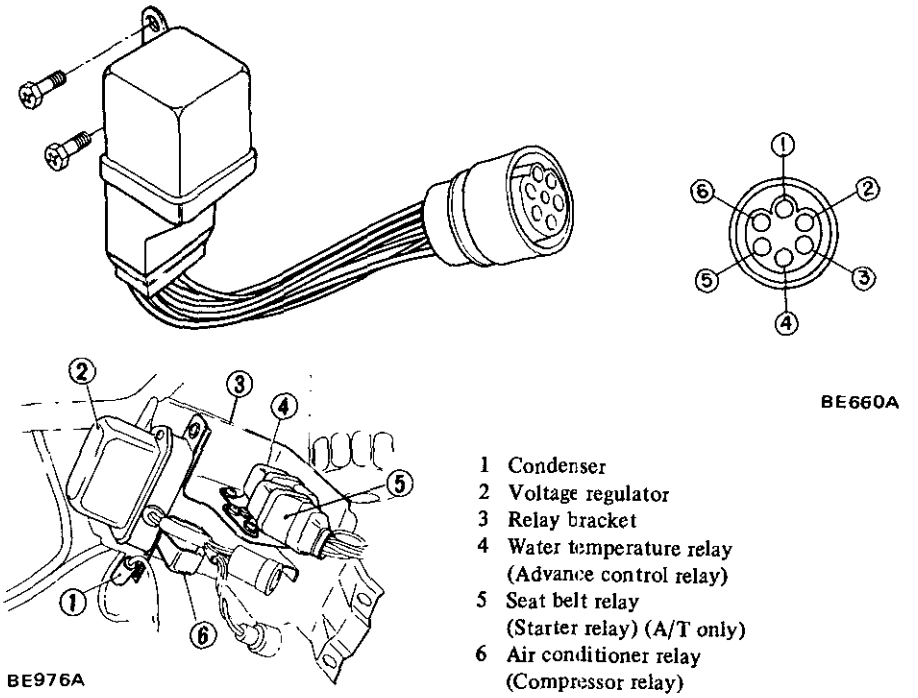

1 Condenser
2 Voltage regulator
3 Relay bracket
4 Water temperature relay (Advance control relay)
5 Seat belt relay (Starter relay) (A/T only)
6 Air conditioner relay (Compressor relay)

Fig. BE-153 Seat belt relay (Starter relay)

INSPECTION

Ignition relay

Check for operation of circuits (i.e., meters, gauges and turn signal lamp) electrically connected to ignition relay. If they do not function, replace ignition relay.

Inhibitor switch

Refer to Section AT.

Seat belt relay (Starter relay)

Test continuity through relay with ohmmeter or test lamp. Under normal conditions, there must be continuity between ⑤-⑥ and there must not be continuity between ①-③. When 12V direct current is applied across ⑤-⑥, there must be continuity between ①-③.

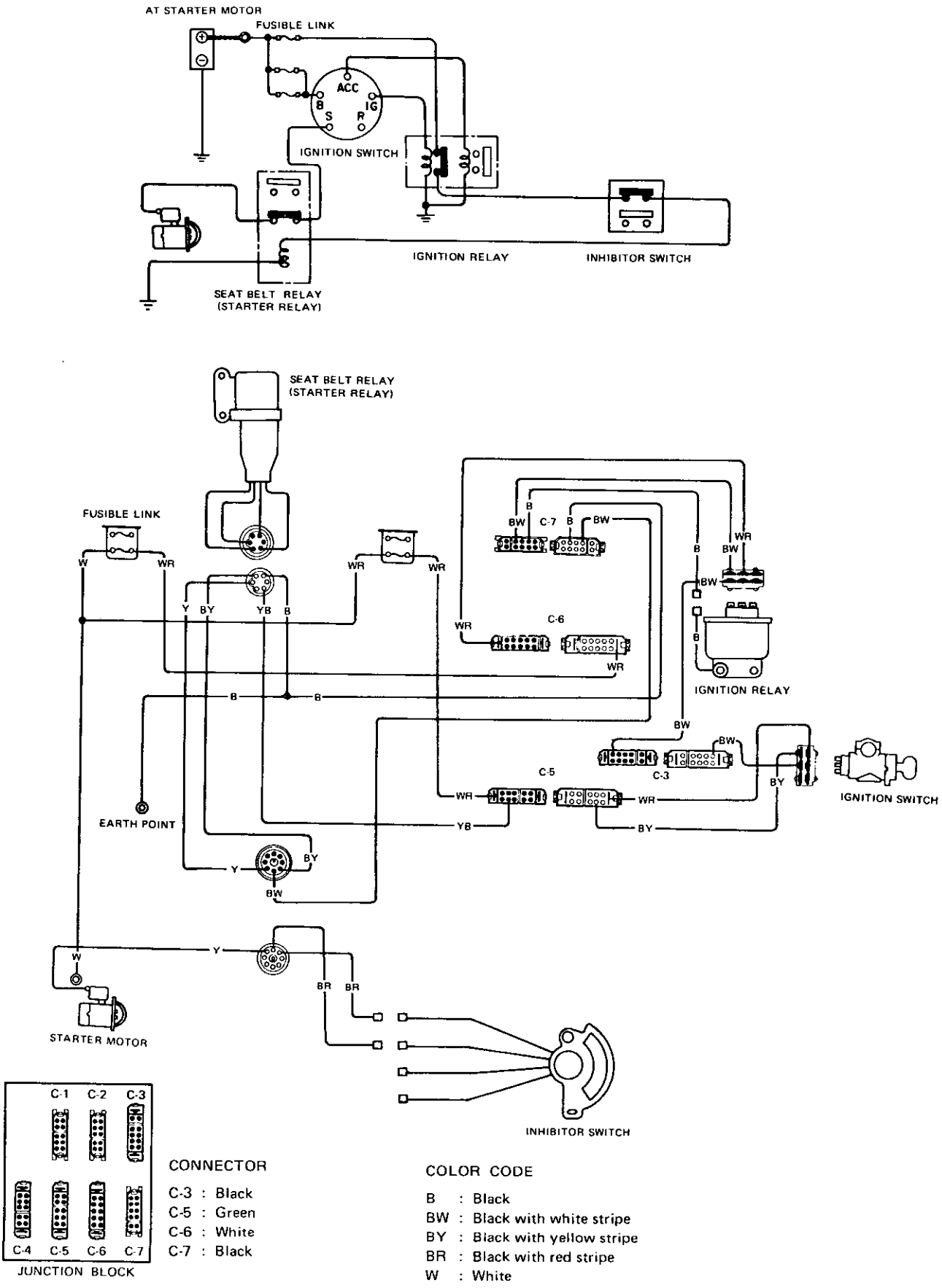

CONNECTOR

C-3 : Black
C-5 : Green
C-6 : White
C-7 : Black

COLOR CODE

B : Black
BW : Black with white stripe
BY : Black with yellow stripe
BR : Black with red stripe
W : White
WR : White with red stripe
Y : Yellow
YB : Yellow with black stripe

BE044B

Fig. BE-154 Circuit diagram for starting system

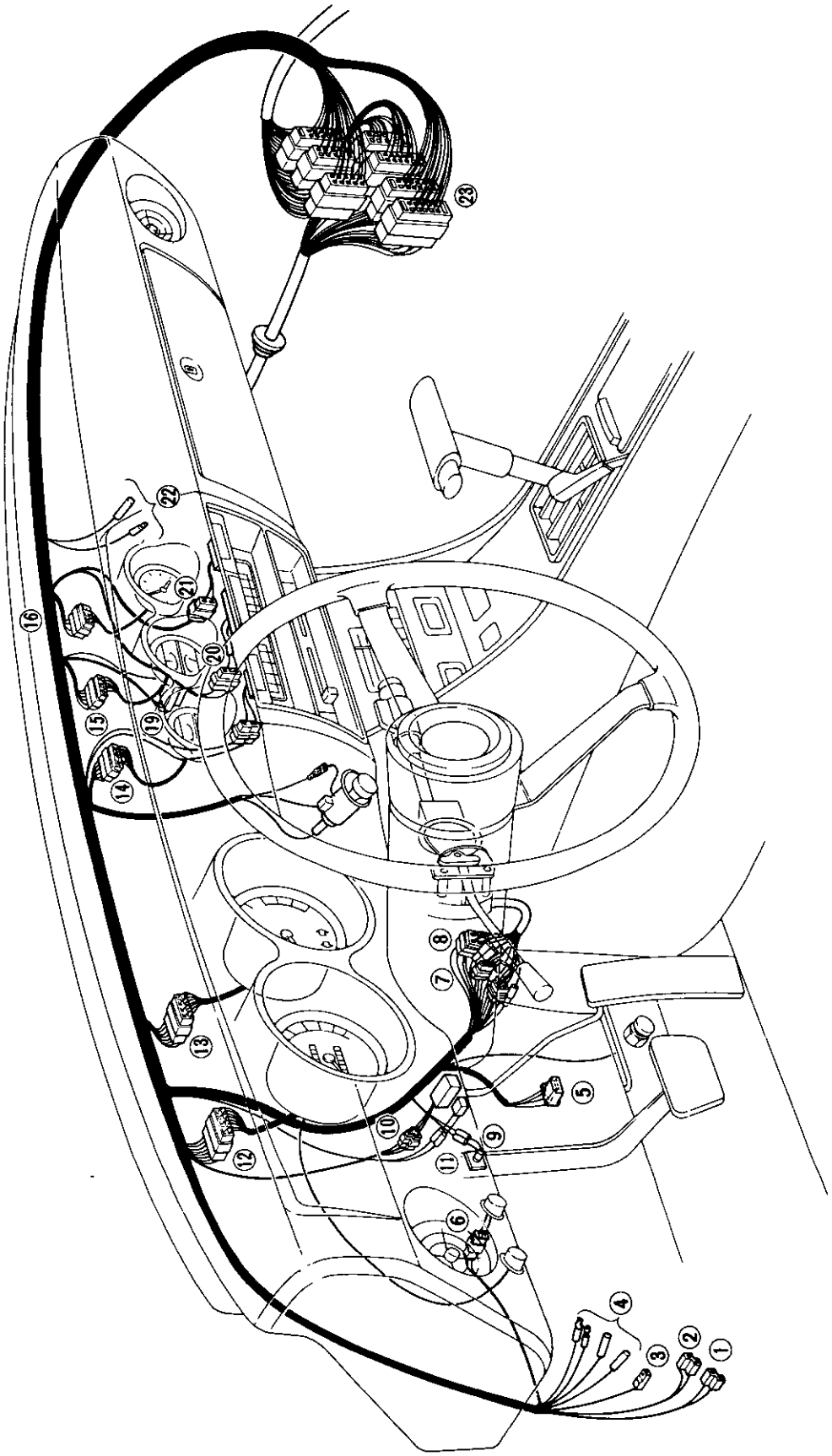

Fig. BE-155 Wiring harness-Instrument

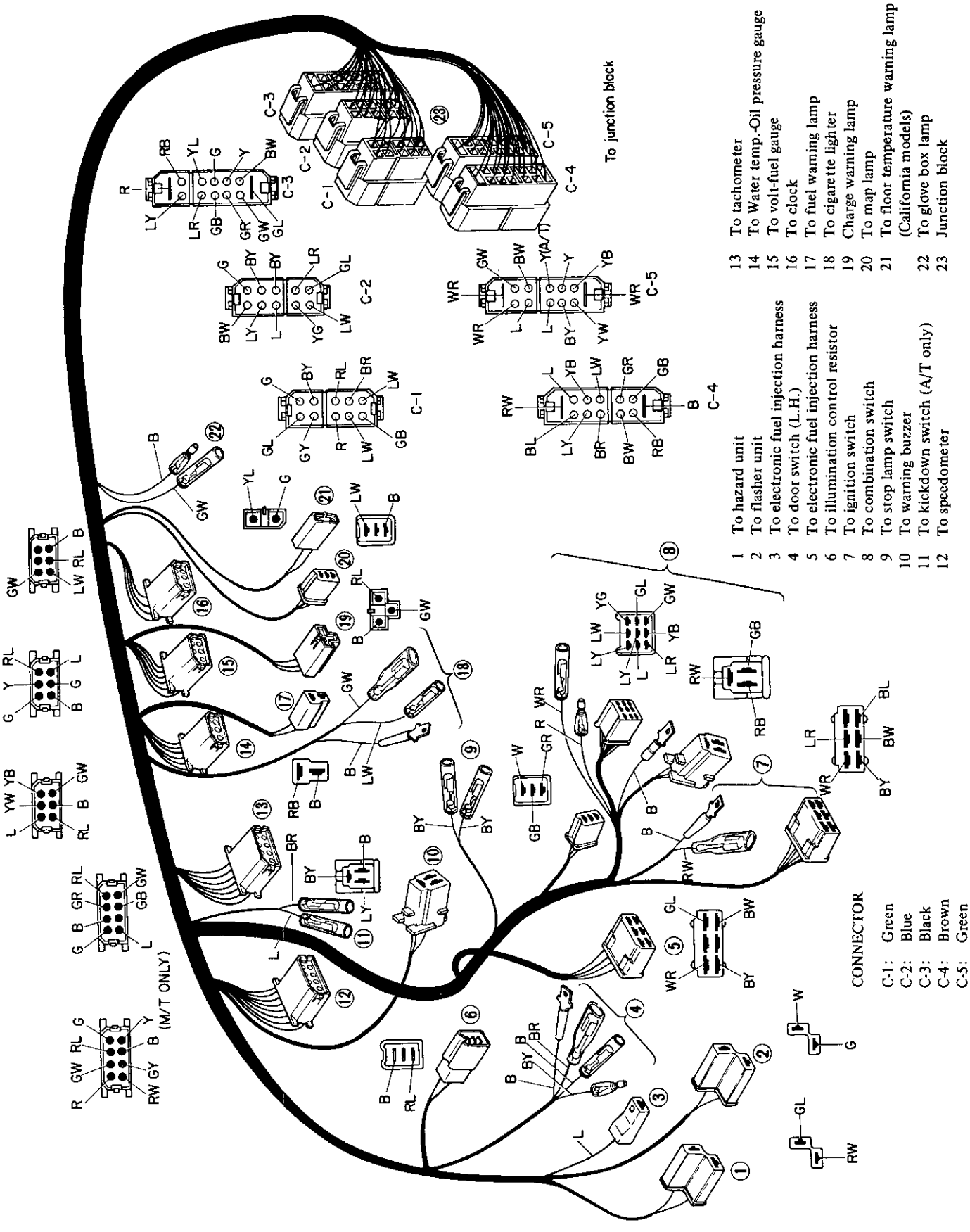
To junction block
C-1
C-2
C-3
C-4
C-5
(M/T ONLY)
CONNECTOR
C-1: Green
C-2: Blue
C-3: Black
C-4: Brown
C-5: Green
1 To hazard unit
2 To flasher unit
3 To electronic fuel injection harness
4 To door switch (L.H.)
5 To electronic fuel injection harness
6 To illumination control resistor
7 To ignition switch
8 To combination switch
9 To stop lamp switch
10 To warning buzzer
11 To kickdown switch (A/T only)
12 To speedometer
13 To tachometer
14 To Water temp.-Oil pressure gauge
15 To volt-fuel gauge
16 To clock
17 To fuel warning lamp
18 To cigarette lighter
19 Charge warning lamp
20 To map lamp
21 To floor temperature warning lamp (California models)
22 To glove box lamp
23 Junction block

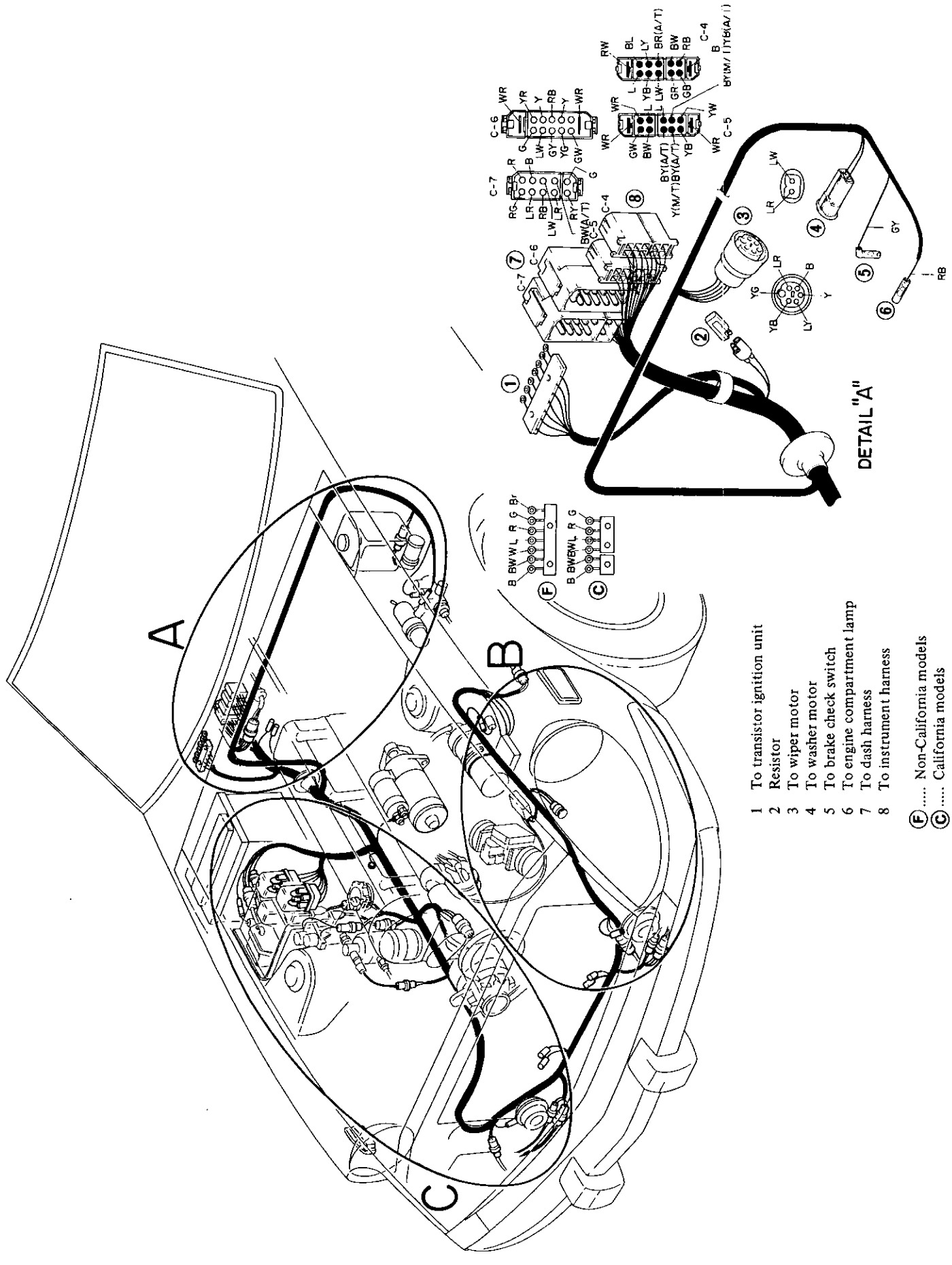

Fig. BE-156 Wiring harness-Engine room

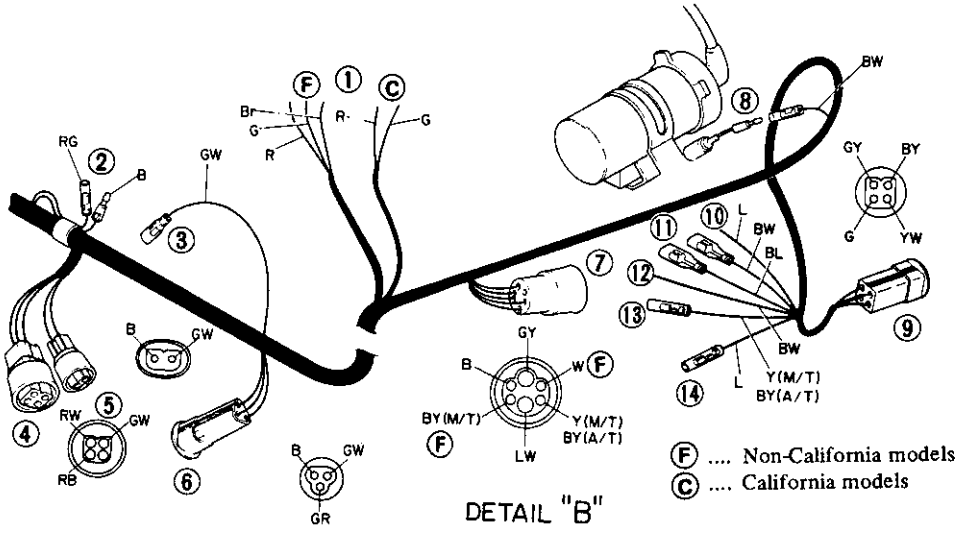

1 To distributor (Terminal block)
2 To fog lamp
3 To horn (L.H.)
4 To head lamp (L.H.)
5 To side marker lamp (L.H.)
6 To parking and turn signal lamp (L.H.)
7 To checker (California models)
8 To condenser
9 To engine harness No. 1
10 To ignition coil external resistor (Negative terminal)
11 To ignition coil external resistor ("R" terminal)
12 To ignition coil external resistor (Positive terminal)
13 To B.C.D.D. solenoid
14 To compressor magnet clutch

15 To front combination lamp (R.H.)
16 To horn (R.H.)
17 To headlamp (R.H.)
18 To front side marker lamp (R.H.)
19 To fog lamp
20 To alternator and condenser
21 To pressure switch
22 Magnet valve
23 To water temperature relay (Non-California models)
24 To seat belt relay (Starter relay) (A/T)
25 Fusible link box
26 To air-cond. relay (Compressor relay)
27 To condenser
28 To voltage regulator
29 To starter motor
30 To earth point
31 To engine harness No. 2

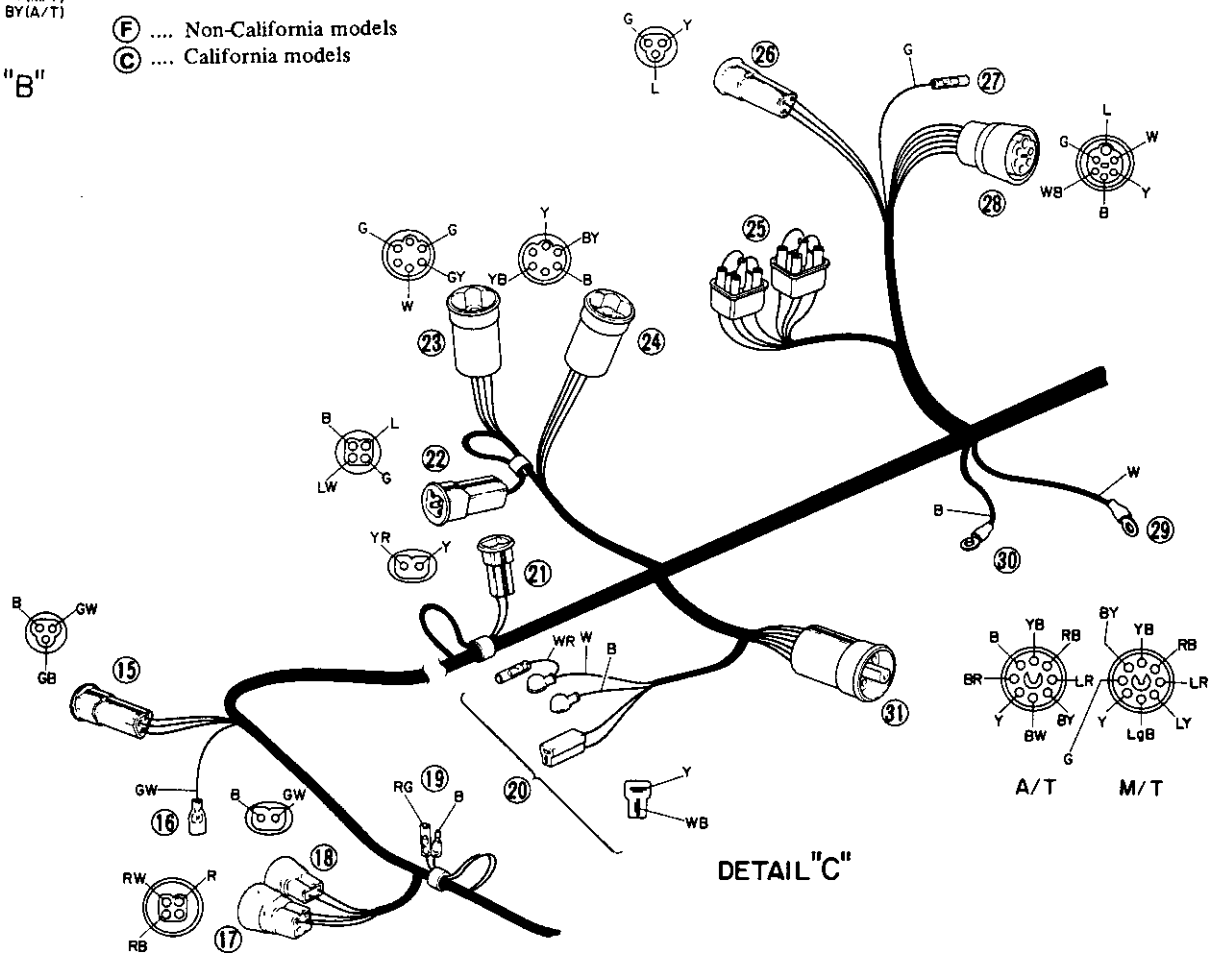

To and from junction block

C-4:	Brown
C-5:	Green
C-6:	White
C-7:	Black

EMISSION WARNING SYSTEM (For California)

CONTENTS

FLOOR TEMPERATURE WARNING SYSTEM (For California) BE-96
WARNING LAMP BE-96
TROUBLE SHOOTING GUIDE BE-98

FLOOR TEMPERATURE WARNING SYSTEM (For California)

The floor temperature warning system consists of a floor temperature sensing switch installed on the car's floor, a floor temperature relay, a floor temperature warning lamp and harnesses.

When the floor temperature rises to an abnormal level, the warning lamp will come on to call the attention of the driver.

The warning lamp also comes on during operation of the starter motor, permitting inspection of the lamp's condition. The lamp goes out after the engine starts.

Refer to Section EC for details.

WARNING LAMP

Bulb replacement

1. Pull heater control knobs off.
2. Remove four screws retaining instrument finisher to instrument panel.
3. Pull instrument finisher forward slightly, and disconnect lead wires at three connectors. Instrument finisher can then be removed from instrument panel.

Note: Three connectors are for map lamp, fuel warning lamp and floor temperature warning lamp (California models).

4. Twist socket behind warning lamp and take out socket with bulb.
5. Installation is in the reverse sequence of removal.

Bulb wattage:

Floor temperature warning lamp 1.4W

Lamp body replacement

1. Pull heater control knobs off.
2. Remove four screws retaining instrument finisher to instrument panel.
3. Pull instrument finisher forward slightly, and disconnect lead wires at three connectors. Instrument finisher can then be removed from instrument panel.

Note: Three connectors are for map lamp, fuel warning lamp and floor temperature warning lamp (California models).

4. Remove two screws retaining warning lamp body to instrument finisher. Lamp body can then be taken out.
5. Installation is in the reverse sequence of removal.

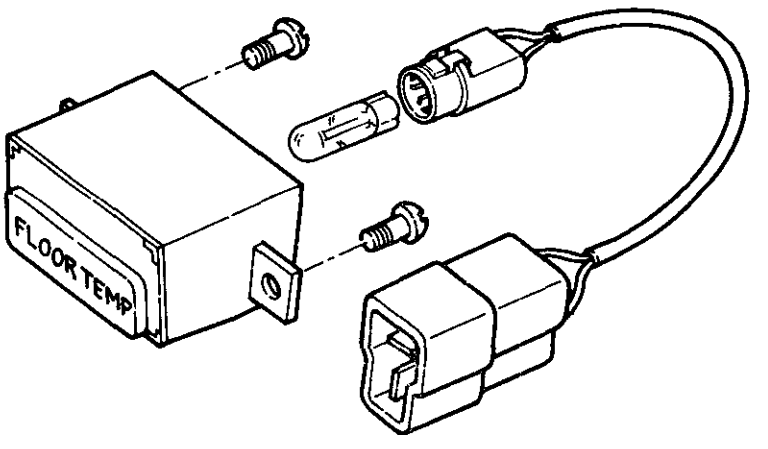

BE656A

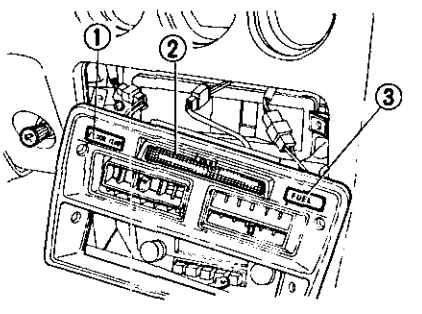

1 Floor temperature warning lamp
2 Map lamp
3 Fuel warning lamp

BE989A

Fig. BE-157 Floor temperature warning lamp

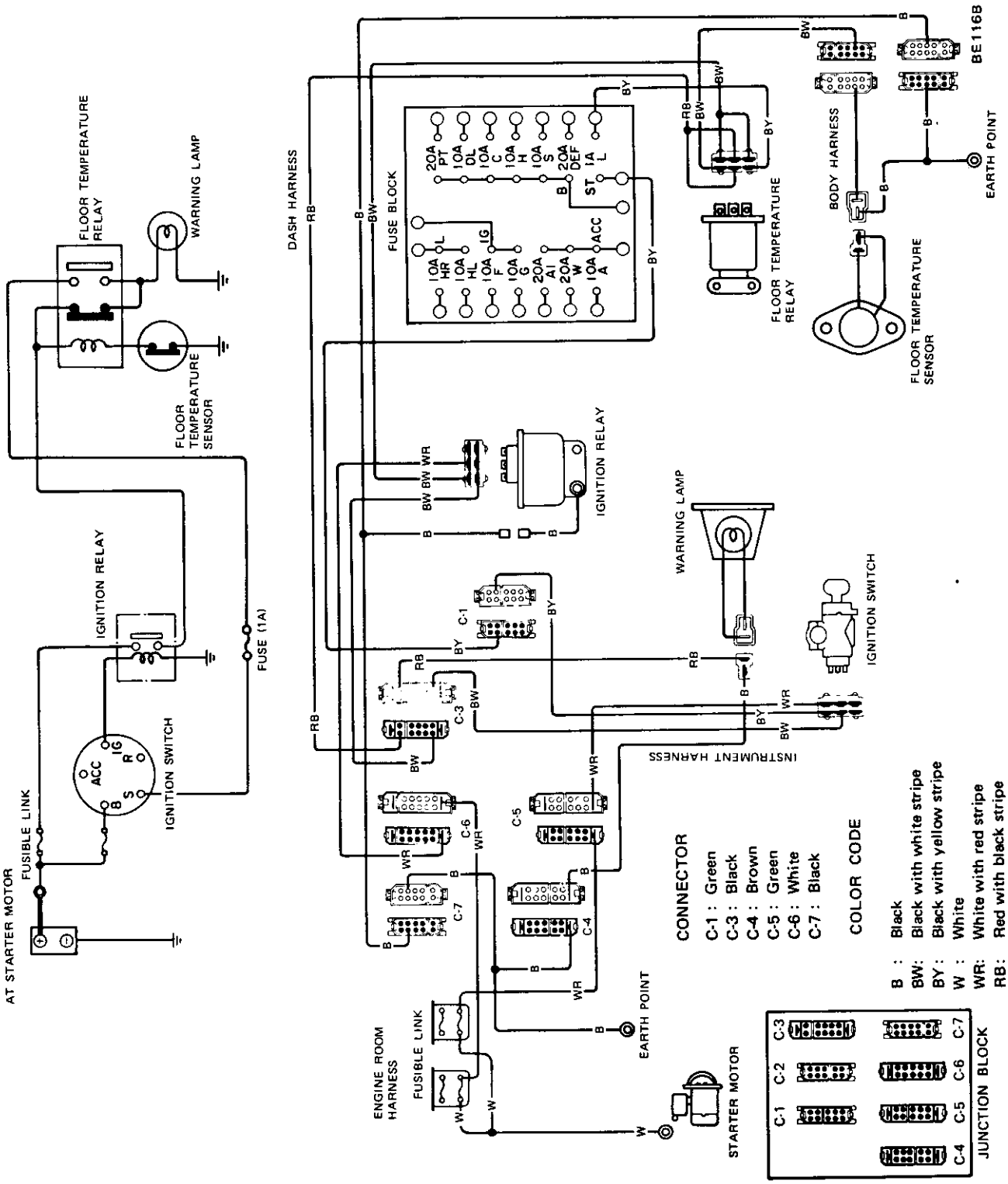

Fig. BE-158 Circuit diagram for floor temperature warning system

TROUBLE SHOOTING GUIDE

Condition	Probable cause	Corrective action
Warning lamp does not light in "START" position of ignition switch.	Burnt or loose bulb.	Replace bulb or correct bulb socket.
	Faulty floor temperature relay.	Conduct continuity test and repair or replace. Refer to "EC" section.
	Loose connection or open circuit.	Check wiring and/or repair if necessary.