Owner's Manual
for Vehicle

The Ultimate
Driving Machine

Contents
From A t

Online Edition for Part No. 01 41 0 159 867 - © 07/05 BMW AG

BMW recommends Castrol

X5 3.0i
X5 4.4i
X5 4.8is

Online Edition for Part No. 01 41 0 159 867 - © 07/05 BMW AG

Congratulations, and thank you for choosing a BMW.

Thorough familiarity with your vehicle will provide you with enhanced control and security when you drive it. We therefore have this request:

Please take the time to read this Owner's Manual and familiarize yourself with the information that we have compiled for you before starting off in your new BMW. The manual contains important data and instructions intended to assist you in obtaining maximum satisfaction from your BMW's unique array of advanced technical features. It also contains information on vehicle maintenance designed to enhance operating safety while simultaneously helping you to maintain your BMW's value throughout an extended service life. For additional information refer to the supplemental manuals.

This Owner's Manual should be considered a permanent part of this vehicle. It should stay with the vehicle when sold to provide the next owner with important operating, safety and maintenance information.

We wish you an enjoyable driving experience.

BMW AG

Online Edition for Part No. 01 41 0 159 867 - © 07/05 BMW AG

Contents

Notes

About this Owner's Manual 8
Symbols used 8
Your individual vehicle 8
Status at time of printing 9
For your own safety 9
Symbol on vehicle parts 10
Service and Warranty 10
Reporting safety defects 11

Overview

Cockpit 14
Instrument cluster 15
Indicator and warning lamps 19
Buttons on steering wheel 23
Warning triangle 24
First-aid kit 24
Refueling 24
Fuel specifications 26

Controls and features

Locks and security systems:
Keys 30
Central locking system 30
Opening and closing: from outside 31
Opening and closing: from inside 34
Liftgate 35
Tailgate 36
Alarm system 38
Windows 39
Panorama glass roof 41

Adjustments:
Sitting safely 43
Seats 44
Mechanical seat adjustment 45
Power seat adjustment 46
Head restraints 47
Power rear-seat backrest adjustment 48
Safety belts 49
Seat, mirror and steering wheel memory 50
Heated seats 52
Steering wheel 52
Steering wheel heater 53
Mirrors 53

© 2005 Bayerische Motoren Werke Aktiengesellschaft
Munich, Germany
Reprinting, including excerpts, only with the written consent of BMW AG, Munich.

Order No. 01 41 0 159 867
US English VIII/05
Printed in Germany
Printed on environmentally friendly paper, bleached without chlorine, suitable for recycling.

Passenger safety systems:
Airbags 55
Transporting children safely 57
Vehicle Memory,
Key Memory 61

Driving:
Ignition lock 62
Starting engine 62
Switching off engine 63
Handbrake 64
Manual transmission 64
Automatic transmission with
Steptronic 65
Turn signals/
headlamp flasher 68
Washer/wiper system/
rain sensor 69
Cruise control 71

Everything under control:
Odometer, outside temperature
display 73
Tachometer 74
Energy control 74
Engine oil temperature gauge 75
Fuel gauge 75
Coolant temperature gauge 76
Service Interval Display 76
Check Control 77
Computer 79
MID Multi-Information
Display 81
Digital clock in MID 82
Computer in MID 85

Technology for safety and driving convenience:
PDC Park Distance Control 90
Antilock Brake System 91
DSC Dynamic Stability
Control 92
xDrive 94
HDC Hill Descent Control 94
Self-leveling suspension 95
2-axle self-leveling
suspension 96
Brake force display 98
Flat Tire Monitor 98

Lamps:
Parking lamps/low beams 100
Adaptive Head Light 101
High beams/roadside parking
lamps 101
Front fog lamps 102
Instrument lighting 102
Interior lamps 103

Controlling the climate for pleasant driving:
Air conditioner 104
Automatic climate control 107
Roller sun blinds 113
Parked car ventilation 113

Cabin convenience:
Integrated universal remote
control 114
Telephone 116
Interior rearview mirror with
digital compass 117
Glove compartment 119
Storage compartments 119
Cup holders 120
Ashtray, front 121
Ashtray, rear 121
Cigarette lighter, rear 122

Loading and transporting:
Ski bag 123
Cargo area
Folding rear backrests
down 124
Roll-up cover 125
Partition net 125
Covers in cargo area 127
Sockets 128
Pull-out cargo floor 128
Cargo loading 130
Roof-mounted luggage rack 132

Contents

Operation, maintenance

Special operating instructions:
Breaking-in 136
General driving notes 137
Driving your X5 138
Safe braking 140

Wheels and tires:
Tire inflation pressure 141
Tire identification marks 145
Wheel/tire condition 146
Replacing wheels/tires 148
Snow chains 149

Under the hood:
Hood 150
Engine compartment essentials 151
Washer fluid 152
Engine oil 152
Coolant 154
Brake fluid 155

Care and maintenance:
The BMW Maintenance System 156
OBD interface socket 157

Owner service procedures

Replacement procedures:
Onboard tool kit 160
Windshield wiper blades 160
Lamps and bulbs 161
Changing a wheel 165
Vehicle battery 171
Fuses 172

Assistance, giving and receiving:
Receiving assistance 173
Jump starting 174
Tow-starting and towing 175

Online Edition for Part No. 01 41 0 159 867 - © 07/05 BMW AG

Technical data

Engine specifications 180
Dimensions 181
Weights 182
Capacities 183

Index

Everything from A to Z 186

Notes

About this Owner's Manual

We have made every effort to ensure that you are able to find what you need in this Owner's Manual as quickly as possible. The fastest way to find certain topics is by using the detailed index at the end. If you desire an initial overview of your vehicle, this can be found in the first chapter.

Should you want to sell your BMW some day, please remember to hand over the Owner's Manual as well; it is an important component of your vehicle.

Additional sources of information:

If you have any questions, your BMW Sports Activity Vehicle center will be glad to advise you.

You can find information on BMW, e.g. technology, on the Internet at www.bmwusa.com.

Symbols used

Indicates precautions that must be followed precisely in order to avoid the possibility of personal injury and serious damage to the vehicle.

Indicates information that will assist you in gaining the optimum benefit from your vehicle and enable you to care more effectively for your vehicle.

Refers to measures that can be taken to help protect the environment.

◀ Marks the end of a specific item of information.

* Indicates special equipment, country-specific equipment and optional extras, as well as equipment and functions not yet available at the time of printing.

Vehicle Memory, Key Memory, refer to page 61. Identifies functions that can be specifically adapted for a particular key or vehicle. These adjustments can be performed by your BMW Sports Activity Vehicle center.

Your individual vehicle

On buying your BMW, you have decided in favor of a model with individualized equipment and features. This Owner's Manual describes all models and equipment that BMW offers within the same group.

We hope you will understand that equipment and features are included that you might not have chosen for your vehicle. Sections describing options and special equipment are marked by an asterisk * to assist you in identifying possible differences between the descriptions in this manual and your own vehicle's equipment.

Should equipment of your BMW not be described in this Owner's Manual, please refer to the included Supplementary Owner's Manuals.

Online Edition for Part No. 01 41 0 159 867 - © 07/05 BMW AG

Status at time of printing

BMW pursues a policy of continuous, ongoing development that is conceived to ensure that our vehicles continue to embody the highest quality and safety standards combined with advanced, state-of-the-art technology. Thus in rare circumstances, the features described in this Owner's Manual may differ from those of your vehicle.

For your own safety

Maintenance and repair:

Advanced technology, e.g. the use of modern materials and high-performance electronics, requires specially adapted maintenance and repair methods. Therefore, only have corresponding work on your BMW carried out by a BMW Sports Activity Vehicle center or a workshop that works according to BMW repair procedures with correspondingly trained personnel. If work is carried out improperly, there is a danger of consequential damage and the related safety risks.◀

California Proposition 65 Warning:

California laws require us to state the following warning:

Engine exhaust and a wide variety of automobile components and parts, including components found in the interior furnishings in a vehicle, contain or emit chemicals known to the State of California to cause cancer and birth defects and reproductive harm.
In addition, certain fluids contained in vehicles and certain products of component wear contain or emit chemicals known to the State of California to cause cancer and birth defects or other reproductive harm.
Battery posts, terminals and related accessories contain lead and lead compounds. Batteries also contain other chemicals known to the State of California to cause cancer. Wash your hands after handling.
Used engine oil contains chemicals that have caused cancer in laboratory animals. Always protect your skin by washing thoroughly with soap and water.◀

Parts and accessories:

For your own safety, use genuine parts and accessories approved by BMW.
When you purchase accessories tested and approved by BMW and Genuine BMW Parts, you simultaneously acquire the assurance that they have been thoroughly tested by BMW to ensure optimum performance when installed on your vehicle.
BMW warrants these parts to be free from defects in material and workmanship.
BMW will not accept any liability for damages resulting from installation of parts and accessories not approved by BMW.

BMW cannot test every product on the market to determine whether it can be used on a BMW safely and without risk to either the vehicle, its operation, or its occupants.
Genuine BMW Parts, BMW Accessories and other products approved by BMW, together with professional advice on using these items, are available from all BMW Sports Activity Vehicle centers.
Installation and operation of non-BMW approved accessories such as alarms, radios, amplifiers, radar detectors, wheels, suspension components, brake dust shields, telephones – including operation of any mobile phone from within the vehicle without using an externally mounted antenna – or transceiver equipment such as CBs, walkie-talkies, ham radios or similar accessories, may cause extensive damage to the vehicle, compromise its safety, interfere with the vehicle's electrical system or affect the validity of the BMW Limited Warranty. Refer to your BMW Sports Activity Vehicle center for additional information.◀

▷ Maintenance, replacement, or repair of the emission control devices and systems may be performed by any automotive repair establishment or individual using any certified automotive part.◀

Symbol on vehicle parts

Indicates that you should consult the relevant section of this Owner's Manual for information on a particular part or assembly.

Service and Warranty

This manual is supplemented by a Service and Warranty Information Booklet for US models or a Warranty and Service Guide Booklet for Canadian models.

We recommend that you read this publication thoroughly.

Your BMW is covered by the following warranties:

- ▷ New Vehicle Limited Warranty
- ▷ Rust Perforation Limited Warranty
- ▷ Federal Emissions System Defect Warranty
- ▷ Federal Emissions Performance Warranty
- ▷ California Emissions Control System Limited Warranty

Detailed information about these warranties is listed in the Service and Warranty Information Booklet for US models or in the Warranty and Service Guide Booklet for Canadian models.

Online Edition for Part No. 01 41 0 159 867 - © 07/05 BMW AG

Reporting safety defects

For US customers:

The following only applies to vehicles owned and operated in the US.

If you believe that your vehicle has a defect which could cause a crash or could cause injury or death, you should immediately inform the National Highway Traffic Safety Administration NHTSA in addition to notifying BMW of North America, LLC, P.O. Box 1227, Westwood, New Jersey 07675-1227, Telephone 800-831-1117.

If NHTSA receives similar complaints, it may open an investigation, and if it finds that a safety defect exists in a group of vehicles, it may order a recall and remedy campaign. However, NHTSA cannot become involved in individual problems between you, your dealer, or BMW of North America, LLC.

To contact NHTSA, you may call the Vehicle Safety Hotline toll-free at 1-800-327-4236 (TTY: 1-800-424-9153); go to http://www.safercar.gov; or write to: Administrator, NHTSA, 400 Seventh Street, SW., Washington, DC 20590. You can also obtain other information about motor vehicle safety from http://www.safercar.gov

For Canadian customers:

Canadian customers who wish to report a safety-related defect to Transport Canada, Defect Investigations and Recalls, may telephone the toll-free hotline 1-800-333-0510, or contact Transport Canada by mail at: Transport Canada, ASFAD, Place de Ville Tower C, 330 Sparks Street, Ottawa ON K1A 0N5.

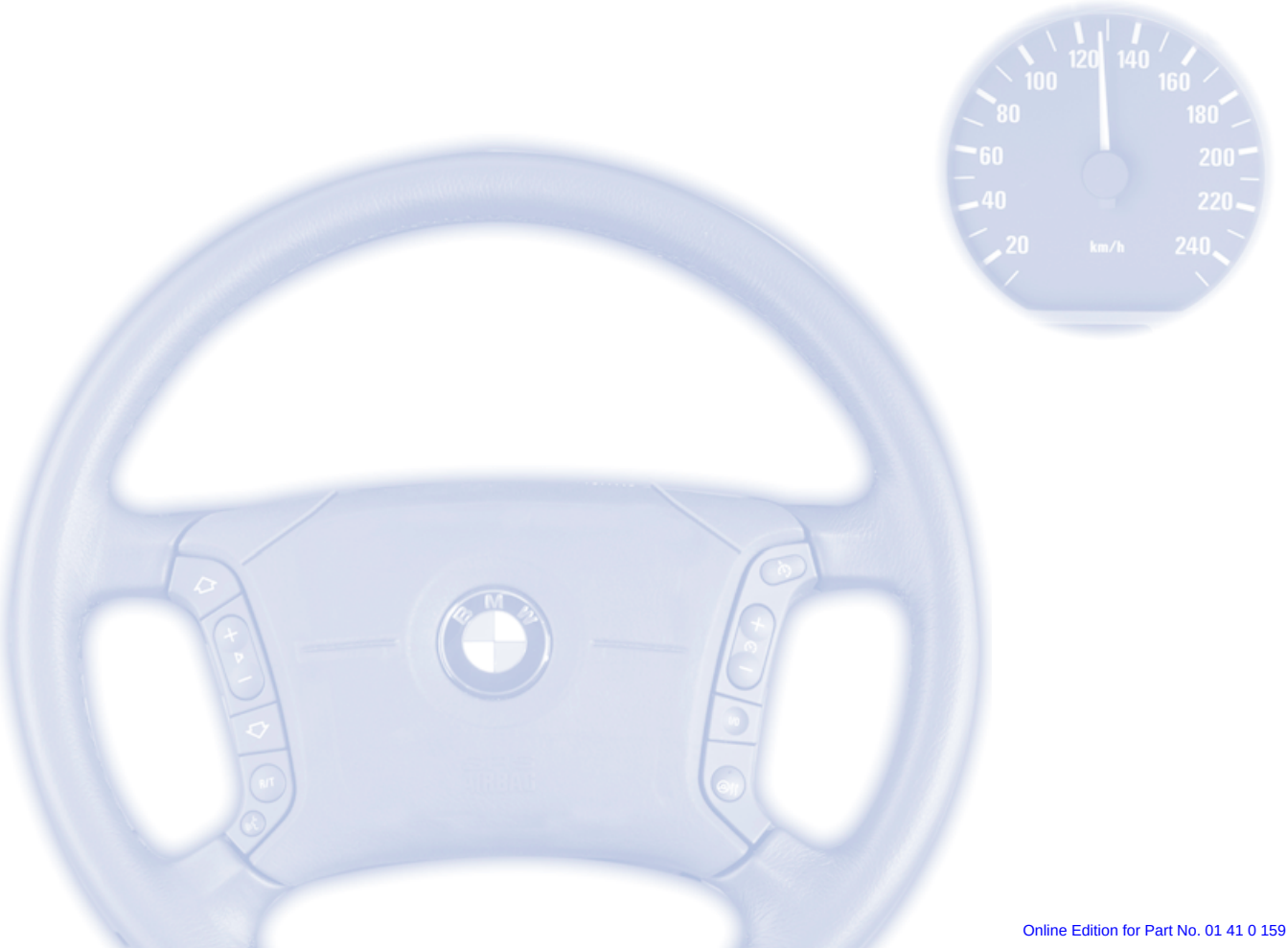

Online Edition for Part No. 01 41 0 159 867 - © 07/05 BMW AG

Overview

Controls and features

Operation, maintenance

Owner service procedures

Technical data

Index

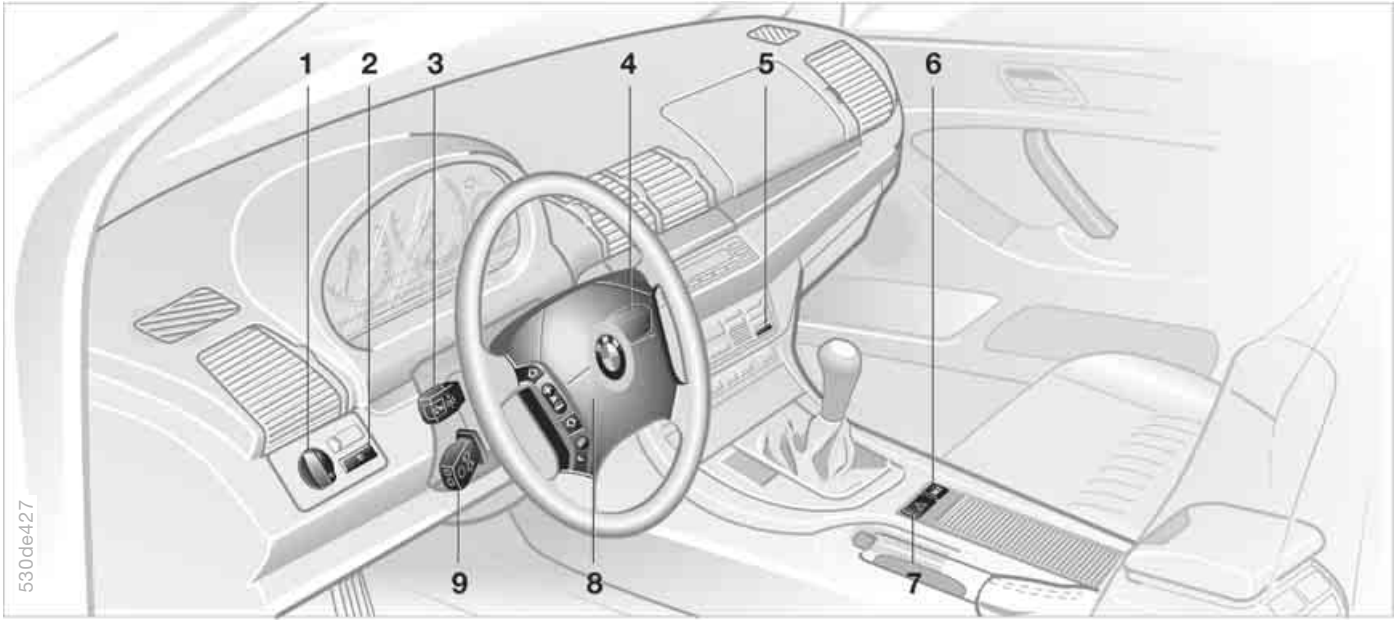

1 Parking lamps/low beams 100
2 Fog lamps 102
3 ▷ Turn signals 68
▷ Roadside parking lamps 101
▷ High beams 101
▷ Headlamp flasher 68
▷ Computer 79
4 Washer/wiper system/rain sensor 69
5 Rear window defroster 105, 110
6 Central locking system 30
7 Hazard warning flashers
8 Horn: the entire surface
9 Adjusting steering wheel 52

Online Edition for Part No. 01 41 0 159 867 - © 07/05 BMW AG

1 Fuel gauge 75

2 Indicator lamp for turn signals 22

3 Speedometer

4 Indicator and warning lamps 19 to 22

5 Tachometer 74
Energy control 74

6 Coolant temperature gauge 76

Instrument cluster X5 3.0i, 4.4i

7 Indicator and warning lamps 19 to 22

8 Reset button for trip odometer 73

9 Display for Check Control 77

10 Odometer and trip odometer 73

11 Display for computer; operation via turn signal lever, refer to page 79:
- ▷ Outside temperature
- ▷ Average fuel consumption
- ▷ Cruising range
- ▷ Average speed

12 Service Interval Display 76

13 Selector lever and program display for automatic transmission* 65

14 Indicator and warning lamps 19 to 22

Instrument cluster* X5 3.0i, 4.4i

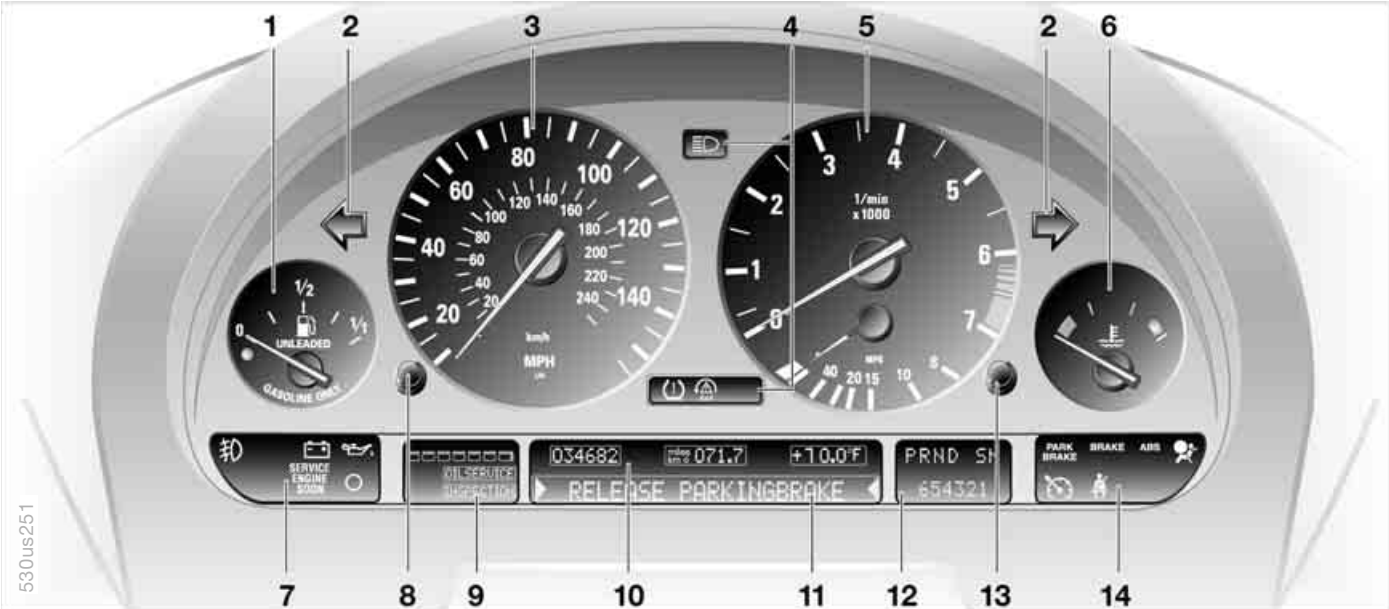

1 Fuel gauge 75

2 Indicator lamp for turn signals 22

3 Speedometer

4 Indicator and warning lamps 19 to 22

5 Tachometer 74
Energy control 74

6 Coolant temperature gauge 76

7 Indicator and warning lamps 19 to 22

8 Reset button for trip odometer 73

9 Service Interval Display 76

10 Display for
▷ Trip odometer/odometer 73
▷ Outside temperature 73

11 Display for Check Control 77

12 Selector lever and program display for automatic transmission* 65

13 CHECK button 77

14 Indicator and warning lamps 19 to 22

Instrument cluster X5 4.8is

1 Fuel gauge 75

2 Indicator lamp for turn signals 22

3 Speedometer

4 Indicator and warning lamps 19 to 22

5 Tachometer 74
Engine oil temperature gauge

6 Coolant temperature gauge 76

7 Indicator and warning lamps 19 to 22

8 Reset button for trip odometer 73

9 Service Interval Display 76

10 Display for
▷ Trip odometer/odometer 73
▷ Outside temperature 73

11 Display for Check Control 77

12 Selector lever and program display for automatic transmission 65

13 CHECK button 77

14 Indicator and warning lamps 19 to 22

Technology that monitors itself

Indicator and warning lamps that are identified by ● are tested for proper functioning whenever the ignition key is turned. They each light up once for different periods of time.

If a malfunction should occur in one of the monitored systems, the corresponding lamp will not go out after the engine is started or it will light up while the vehicle is moving. The section below will instruct you on what to do in this situation.

Red: stop immediately

Battery charge current ●
The battery is not being charged. There is a malfunction of the alternator drive belt or in the charging circuit of the alternator. Have the system checked immediately.

If the drive belt is defective, do not continue driving. The engine could be damaged due to overheating. When the drive belt is defective, you will also have to exert increased steering effort.◀

Engine oil pressure ●
Stop immediately and switch off the engine. Check the engine oil level; top up as required. If the oil level is correct: have the system checked immediately.

Do not continue driving. The engine could be damaged due to inadequate lubrication.◀

Handbrake*/
brake hydraulic system ●
Lights up with handbrake engaged.
For additional information, refer to page 64

Lights up although the handbrake is released: stop immediately. The brake fluid in the reservoir has fallen to below the minimum level. At the same time, a considerably longer brake pedal travel may be noticeable. Have the system checked immediately.

During continued driving, increased brake pedal pressure may be necessary and considerably longer braking distances may result. Please remember to adapt your driving style accordingly.◀

Before continuing your journey, be sure to read the notes on pages 140 and 155.

Also lights up in the Check Control with the message CHECK BRAKE LININGS.

Display of the previously described malfunction in Canadian models.

Transmission temperature* ●
The transmission is overheated. Reduce speed immediately and stop at a suitable location so that the system can cool down again. Have the system checked immediately.

Yellow: stop immediately

Flat Tire Monitor ●
An acoustic signal also sounds: there is a flat tire or extensive inflation pressure loss. Reduce speed immediately for stopping while avoiding extreme braking and steering maneuvers.
For additional information, refer to page 99

Red or yellow: continue to drive cautiously

BRAKE

ABS

4x4

The red brake warning lamp lights up together with the warning lamps for ABS and DSC/xDrive. In addition, a warning signal sounds:
ABS, DSC, HDC and xDrive have failed. Drive may be being exerted exclusively via the rear axle. Have the system checked as soon as possible.
For additional information, refer to pages 91, 92

Proceed cautiously and defensively. When driving on poor roads, avoid using full throttle or pressing the accelerator beyond the kick-down point and also avoid forceful braking or full braking. Otherwise, the drive train may be damaged or accidents can occur.◀

If the brake warning lamp lights up in yellow in the above-described combination, the EBV Electronic brake-force distribution is still available.

Display of the previously described malfunction in Canadian models.

ABS

4x4

Red: an important reminder

Handbrake*
Lights up with handbrake engaged.
For additional information, refer to page 64

Handbrake warning lamp* for Canadian models

Please fasten safety belts ●
Indicator lamp flashes or lights up. In addition, a signal sounds and, depending on the equipment, a message* appears in the Check Control. Please check safety belts for correct placement.

The belt reminder is activated when the safety belt on the driver's side has not yet been fastened.
The belt reminder is also active at speeds greater than approx. 5 mph/ 8 km/h when the passenger belt has not yet been fastened, heavy objects are placed on the front passenger seat, or passengers sitting in the front remove their safety belts.
For additional information on safety belts, refer to page 49

Airbags ●
Malfunction in airbag system. Have the system checked as soon as possible.
For additional information, refer to page 55

Yellow: check as soon as possible

DBC Dynamic Brake Control ●
Malfunction in the DBC system. Please have the system checked as soon as possible.
For details on DBC, refer to page 91

Display of the previously described malfunction in Canadian models.

Engine oil level
Comes on while driving: the oil level is at the absolute minimum; refill as soon as possible. Do not drive more than approx. 30 miles/50 km until you do.
For additional information, refer to page 152

Engine oil level
Comes on after the engine has been switched off: add engine oil at your earliest opportunity, e.g. when you stop to refuel.
For additional information, refer to page 152

Automatic transmission*
The automatic transmission switches into the emergency program due to a malfunction. Have the system checked as soon as possible.
For additional information, refer to page 67

Brake pads* ●
Have the condition of the brake pads checked.
For additional information, refer to page 140

Self-leveling suspension* ●
The self-leveling suspension is inactive. Have the system checked as soon as possible.
For additional information, refer to page 95

DSC Dynamic Stability Control/ xDrive ●
The warning lamp lights up continuously and a warning signal sounds: DSC and HDC or the xDrive 4-wheel drive system have failed.
The stabilizing interventions of DSC or the xDrive 4-wheel drive system are no longer available. Drive may be being exerted exclusively via the rear axle. Have the system checked as soon as possible.
For additional information, refer to page 92

Proceed cautiously and defensively. When driving on poor roads, avoid using full throttle or pressing the accelerator beyond the kick-down point and also avoid forceful braking or full braking. Otherwise, the drive train may be damaged or accidents can occur.◀

Engine electronics*
Malfunction in the engine electronics. You can continue to drive with reduced engine output or engine speed. Have the system checked as soon as possible.

Service Engine Soon ●
If the indicator lamp lights up continuously or intermittently, there is a malfunction in the exhaust-relevant electronic systems. Although the vehicle remains operable, the system must be checked as soon as possible.
For additional information, refer to page 157

Display of the previously described malfunction in Canadian models.

Check Gas Cap* ●
Warning lamp lights up. Fuel filler cap is not properly closed or is missing. Check whether the fuel filler cap is properly closed. For additional information, refer to page 25

Green: for your information

Turn signals
Flashes when the turn signals are operated. Rapid flashing indicates a system malfunction.
For additional information, refer to page 68

Cruise control*
Lights up when system is switched on: ready for operation using the buttons on the steering wheel.
For additional information, refer to page 71

Fog lamps
Lights up when fog lamps are switched on. For additional information, refer to page 102

Blue: for your information

High beams
Lights up when the high beams are on or the headlamp flasher is actuated.
For additional information, refer to pages 68, 101

Online Edition for Part No. 01 41 0 159 867 - © 07/05 BMW AG

Buttons on steering wheel*

The buttons integrated into the steering wheel are provided so that you can operate a number of accessories quickly and without being distracted from traffic conditions. You may operate:

- ▷ selected functions of the audio sources*
- ▷ the recirculated-air mode of the air conditioner* or the steering-wheel heater*
- ▷ the cruise control
- ▷ selected phone functions* and
- ▷ the voice command system*.

▷ In order to operate a system, the corresponding system must be switched on.◀

Press briefly:
Accept incoming call, start dialing, terminate call.
Extended pressure:
Switch voice command system on and off

R/T

Display/hide phonebook. Display the entries consecutively with the buttons for forward/back

Forward:

- ▷ Radio
  Press briefly: next stored station
  Extended pressure: station search function
- ▷ CD
  Press briefly: track search
  Extended pressure: fast forward in track
- ▷ Cassette
  Press briefly: stop track search or fast forward
  Extended pressure: fast forward
- ▷ Telephone
  Scroll through list of names

Reverse: functions the same as fast forward

Volume

On the sports steering wheel*, there are +/– buttons for volume on the left side of the steering wheel.

Cruise control: resume

Cruise control: store and accelerate + as well as store and decelerate –

On the sports steering wheel*, there are +/– buttons on the right side of the steering wheel for the cruise control.

I/0

Cruise control: activate/interrupt/deactivate

Recirculated-air mode* and AUC automatic recirculated-air control or steering wheel heater*: switch on/off

Warning triangle*

1. Open the cover on the left in the cargo area by lifting the handle on the cover
2. Pull the tab of the retaining strap, refer to arrow, and remove the hazard warning triangle from the support bracket
3. To install: slide the hazard warning triangle into the support bracket and press on the retaining strap.

First-aid kit*

The first-aid kit is located under the front passenger's seat.

To open: pull the handle and fold the cover down.

To close: fold the cover up.

Some of the articles in the first-aid kit may be used within a limited time only. Therefore, check the expiration dates of the contents regularly and replace the contents concerned in good time as needed.

Refueling

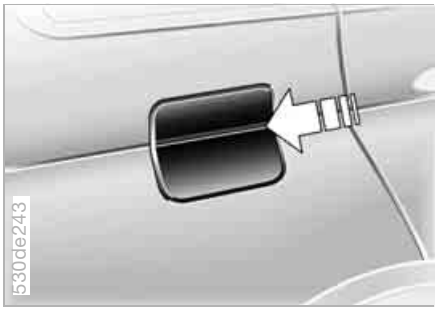

Fuel filler door

Before filling the tank, switch off the engine. If you do not, fuel cannot be added to the tank and the Service Engine Soon lamp may come on.◀

To open the fuel filler door, press on the front edge.

In the event of an electrical malfunction, you can also open the fuel filler door manually:

1. Open the cover on the right in the cargo area by lifting the handle on the cover
2. Pull the knob with the fuel pump symbol.

Online Edition for Part No. 01 41 0 159 867 - © 07/05 BMW AG

When handling fuels, always observe any safety guidelines posted at the service station. Never carry spare fuel containers in your vehicle. Whether empty or full, these containers can leak, cause an explosion, or lead to fire in the event of a collision.◀

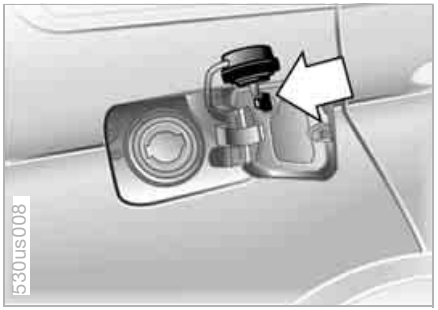

Observe the following when refueling

Open the filler cap carefully to prevent fuel from spraying out. Fuel spray may cause injury.
Do not top off. Topping off may cause fuel spillage.◀

Keep the filler cap in the bracket attached to the fuel filler door.

When refueling, insert the filler nozzle completely into the filler pipe. Pulling the nozzle out of the pipe during refueling

▷ results in premature pump shutoff
▷ and will reduce the effect of the vapor recovery system on the pump.

The fuel tank is full when the filler nozzle clicks off the first time.

To close the fuel filler cap:
Fit the cap and turn it clockwise until you clearly hear a click.

Close the filler cap carefully after refueling until a click is heard. While closing, be sure not to jam the strap attached to the cap between the gas cap and the vehicle. A loose or missing cap will activate the message CHECK GAS CAP in the Check Control* or the Check Gas Cap lamp*.◀

Tank capacity:
approx. 24.6 gal./93 liters,
including a reserve of:
6-cylinder engine: approx. 2.0 gal./ 8 liters:
8-cylinder engine: approx. 2.5 gal./ 10 liters.

Never attempt to continue driving until the tank is completely empty, as engine functions could be affected, and the vehicle could sustain damage as a result.◀

Fuel specifications

The engine uses lead-free gasoline only.

Required fuel

Premium Unleaded Gasoline,
Minimum Octane Rating: 91.

Minimum Octane Rating corresponds to the Anti Knock Index AKI and is determined according to the so-called (R+M)/2 method.

Do not use leaded gasoline: use of leaded fuel will permanently damage the lambda probe and catalytic converter of your vehicle.◀

Use high-quality brands

Field experience has indicated significant differences in fuel quality: volatility, composition, additives, etc., among gasolines offered for sale in the United States and Canada. Fuels containing up to and including 10% ethanol or other oxygenates with up to 2.8% oxygen by weight, that is, 15% MTBE or 3% methanol plus an equivalent amount of co-solvent, will not void the applicable warranties with respect to defects in materials or workmanship.

The use of poor-quality fuels may result in drivability, starting and stalling problems, especially under certain environmental conditions such as high ambient temperature and high altitude.
Should you encounter drivability problems that you suspect could be related to the fuel you are using, we recommend that you respond by switching to a recognized high-quality brand.
Failure to comply with these recommendations may also result in unscheduled maintenance.◀

Online Edition for Part No. 01 41 0 159 867 - © 07/05 BMW AG

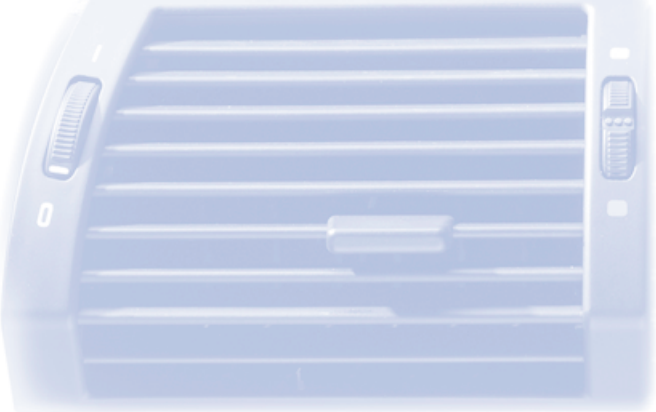

Online Edition for Part No. 01 41 0 159 867 - © 07/05 BMW AG

Overview

Controls and features

Operation, maintenance

Owner service procedures

Technical data

Index

Online Edition for Part No. 01 41 0 159 867 - © 07/05 BMW AG

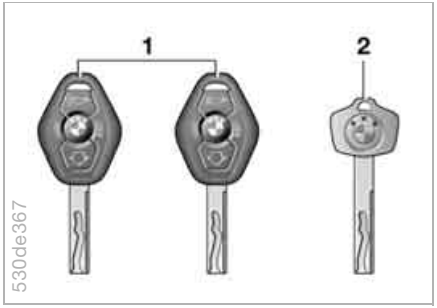

The key set

1 Each master key with remote control contains a long-life battery as a power supply, which is automatically recharged in the ignition lock while driving. It is therefore necessary to use each master key at least twice per year in order to maintain the charge. Depending on which master key the vehicle detects during unlocking, different settings will be requested and executed in the vehicle, refer to Vehicle and Key memory on page 61.

2 Spare key for storage in a safe place, such as in your wallet.
This key does not fit in the lock of the glove compartment. This is an advantage in a hotel, for example. The key is not intended for continuous use.

Replacement keys

Additional or replacement keys are available at your BMW Sports Activity Vehicle center.

Central locking system

The concept

The central locking system is ready for operation as soon as you close the front doors. The system engages or releases the locks on the

▷ doors
▷ liftgate/tailgate
▷ fuel filler door.

The central locking system can be operated

▷ from outside via the remote control as well as via the driver's door lock
▷ from inside via the button for the central locking system.

If the system is locked from inside, the fuel filler door remains unlocked, refer to page 34.

When the system is actuated from outside of the vehicle, the anti-theft system is actuated simultaneously. This prevents the doors from being unlocked via lock buttons or door handles. The alarm system is also armed or disarmed.

In an accident of sufficient severity the central locking system automatically unlocks, but only doors which have not been locked separately with the lock buttons, refer to page 34. In addition, the hazard warning flashers and the interior lamps are switched on.

Online Edition for Part No. 01 41 0 159 867 - © 07/05 BMW AG

Using remote control

When you engage/release the vehicle locks, you also activate/deactivate the anti-theft system, arm/disarm the alarm system, and switch the interior lamps on/off.

Protect the remote control against unauthorized use by handing over only the spare key, for example when using hotel valet parking.◀

You can find more detailed information on the alarm system on page 38.

Since passengers or animals remaining in the vehicle might be able to lock the doors from the inside, take the vehicle's keys with you so that the vehicle can be opened again from the outside at any time.◀

Unlocking vehicle

Press the button.

Press the button once to unlock the driver's door and the fuel filler door only; press a second time to unlock all remaining doors as well as the liftgate/tailgate.

Convenience opening mode

Press the button briefly and then hold down.
The windows and the panorama glass roof open.

Locking and securing

Press the button.

As a confirmation that the vehicle is correctly locked, the hazard warning flashers light up.

If you so desire, you can have this function deactivated if your vehicle is not equipped with an alarm system.◀

Switching on interior lamps

If the vehicle is locked, press the button.
With this function, you can also search for your vehicle, e.g. when parked in an underground garage.

Switching off tilt alarm sensor and interior motion sensor

Press the button once again immediately after locking.
For more detailed information, refer to page 39.

Opening liftgate

Briefly press the button.

The liftgate will open slightly, regardless of whether it was previously locked or unlocked.

Online Edition for Part No. 01 41 0 159 867 - © 07/05 BMW AG

If the vehicle is locked, the liftgate is also locked again when closed. Before and after a trip, be sure that the liftgate was not opened unintentionally.◀

Panic mode

When the alarm system is armed, you can trigger an alarm in response to an impending danger by pressing and holding the button for more than two seconds.

To switch off the alarm

Press the button.

Malfunction

The remote control can be subjected to malfunctions by local radio waves. Should the remote control fail to operate owing to interference of this kind, unlock and lock the vehicle via the door lock using the master key.

If it is no longer possible to lock the vehicle via the remote control, the battery is discharged. Use this remote control during an extended drive; this will recharge the battery, refer to page 30.

For US owners only

The transmitter and receiver units comply with part 15 of the FCC/Federal Communication Commission regulations. Operation is governed by the following:

FCC ID: LX8EWS
LX8FZVS
LX8FZVE

Compliance statement:
This device complies with part 15 of the FCC Rules. Operation is subject to the following two conditions:

- ▷ This device may not cause harmful interference, and
- ▷ this device must accept any interference received, including interference that may cause undesired operation.

Any unauthorized modifications to these devices could void the user's authority to operate the equipment.◀

Online Edition for Part No. 01 41 0 159 867 - © 07/05 BMW AG

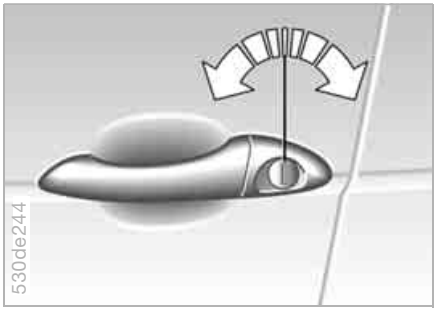

Using door lock

One turn of the key in the driver's door lock unlocks the driver's door only. Turning the key a second time unlocks all of the remaining doors, the liftgate/ tailgate and the fuel filler door.

As a confirmation that the vehicle is correctly locked, the hazard warning flashers light up.

If you so desire, you can deactivate this function if your vehicle is not equipped with an alarm system.◀

Convenience operation

You also have the option of operating the windows and the panorama glass roof from the door lock.

▷ To open: with the door closed, turn the key to the Unlock position and hold it.

▷ To close: with the door closed, turn the key to the Lock position and hold it.

Watch during the closing process to be sure that no one is injured. Releasing the key stops the operation.◀

Manual operation

In the event of an electrical malfunction, turn the key to the extreme left or right to unlock/lock the door.

Opening and closing: from inside

This button serves to unlock or lock doors and the liftgate, but does not activate the anti-theft system. The fuel filler door remains unlocked.

You have the option of setting the central locking system to lock automatically as soon as you begin to drive. This can be set to be key-specific.◀

If only the driver's door was unlocked from the outside and you press the button

▷ all other doors, the liftgate/tailgate and the fuel filler door will be unlocked when the driver's door is opened

▷ the driver's door will be locked again when it is closed.◀

Unlocking and opening doors

▷ Either unlock the doors together with the button for the central locking system and then pull the door handle above the armrest or

▷ pull the release handle for each door twice: the first pull unlocks the door, and the second one opens it.

Locking

▷ Use the central locking button to lock all of the doors simultaneously, or

▷ press down the individual lock buttons. As an added design feature to prevent the driver from being inadvertently locked out of the vehicle, the driver's lock button will not engage as long as the door is open.

When the vehicle is moving, do not lock the doors with the lock buttons. Doors locked in this manner would not unlock automatically in the event of an accident.
Since passengers or animals remaining in the vehicle might be able to lock the doors from the inside, take the vehicle's keys with you so that the vehicle can be opened again from the outside at any time.◀

Online Edition for Part No. 01 41 0 159 867 - © 07/05 BMW AG

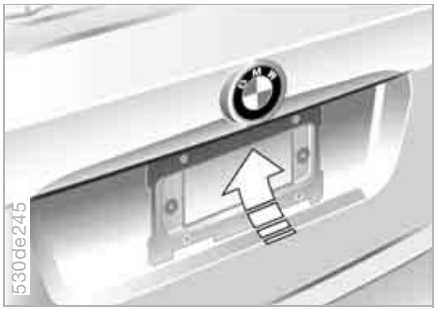

Opening from outside

Press the button, refer to arrow:
The liftgate opens slightly.

The cargo area is illuminated whenever the liftgate is opened, refer also to page 103.

With the liftgate open, the distance from the ground to the upper edge is more than 6.6 ft/2 m. Please remember this, e.g. when opening the liftgate in a garage.◀

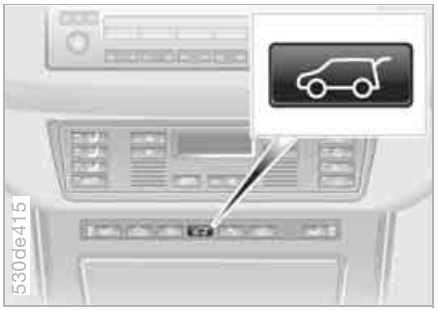

Opening from inside

Press this button to open the liftgate when the vehicle is stationary.

If pointed or sharp-edged objects could strike the rear window while driving, be sure to provide protection around all edges. Failure to do so could result in damage to the heating conductors of the rear window.◀

For information on the cargo area cover and on other details in the cargo area, refer to Cargo area, beginning on page 124.

Manual release

In the event of an electrical malfunction, you can release the liftgate manually:

1. Remove the plastic plug from inside the cargo area and pull toward the interior, refer to arrow. The liftgate will be released
2. Reinstall the plug.

Liftgate

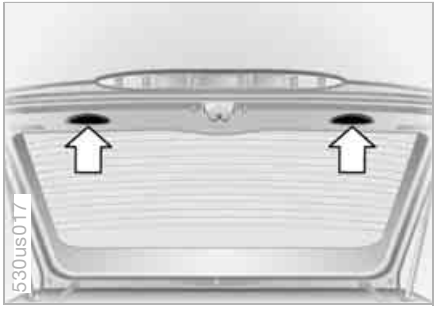

Closing

You can pull the liftgate down by placing both hands in the handle recesses, refer to arrows.

Automatic Soft Close function

To close the liftgate, merely press it down gently. The closing process will then be carried out automatically.

To avoid injuries, be sure that the travel path of the liftgate is clear when it is closed, as with all closing procedures.◀

Tailgate

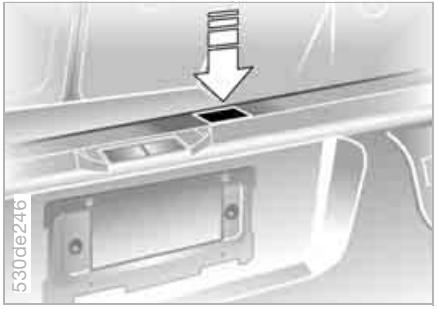

Opening

Press the button:
You can fold the tailgate down.

When opened, the tailgate can accept loads of up to 440 lbs./ 200 kg. When the vehicle is stationary you may, for example, utilize the tailgate as a seat or as a loading platform for luggage or recreation gear.◀

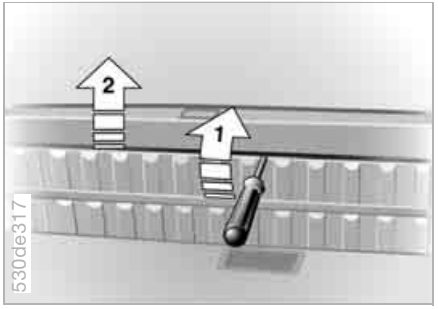

Manual release

In the event of an electrical malfunction, you can release the tailgate manually:

1. Unfasten the trim panel clip with the vehicle key or with a screwdriver, refer to arrow 1, and remove it toward the top, refer to arrow 2

Online Edition for Part No. 01 41 0 159 867 - © 07/05 BMW AG

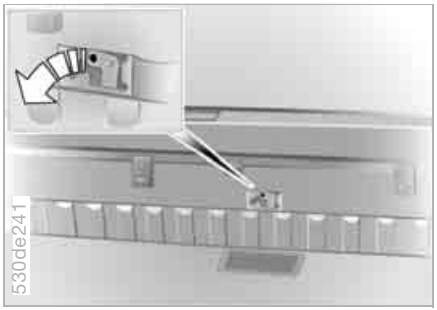

2. Using the same tool, press the latch in the direction of the arrow; the tailgate is released
3. Reinstall the trim panel.

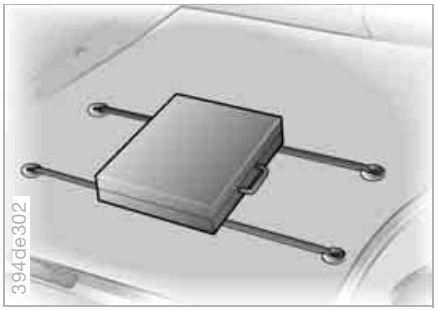

Luggage straps

Use the luggage straps on the cargo floor cover to secure smaller items of luggage.

Movement is reduced when objects are placed on the straps.

The lashing eyes located at the corners of the cargo area provide you with a convenient means of attaching luggage nets* or flexible straps for securing luggage.

Refer also to Cargo loading on page 130.

The concept

The vehicle alarm system responds:

- ▷ When a door, the hood or the liftgate is opened
- ▷ To movement in the vehicle interior: interior protection, refer to Tilt alarm sensor and Interior motion sensor
- ▷ To variations in the vehicle tilt angle such as occur during attempts to steal the wheels or tow the vehicle
- ▷ To interruption of battery voltage.

The system responds to unauthorized vehicle entry and attempted theft by simultaneously activating the following:

- ▷ An acoustical alarm, which sounds for 30 seconds
- ▷ The hazard warning flashers, which flash for approx. five minutes
- ▷ The high beams, which flash on and off in the same rhythm as the hazard warning flashers.

Arming and disarming alarm system

When you lock or unlock the vehicle, either with the remote control or at the door lock, the alarm system is armed or disarmed at the same time.

You can have different acknowledgment signals set to confirm arming and disarming.◀

The liftgate can also be opened with the system armed using the button on the remote control, refer to page 31. The liftgate is locked again when closed. Pressing the button longer triggers the alarm: panic mode, refer to page 32.

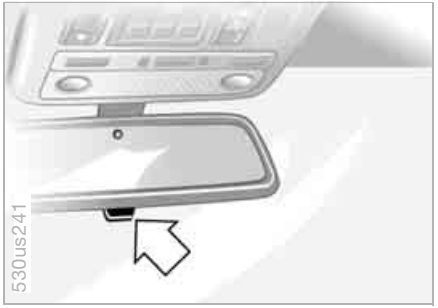

Indicator lamp displays

- ▷ The indicator lamp below the interior rearview mirror flashes continuously: the system is armed.
- ▷ The indicator lamp flashes when the vehicle is locked: the doors or liftgate are not properly closed. Even if you do not close the alerted area, the system begins to monitor the remaining areas, and the indicator lamp flashes continuously after 10 seconds. However, the interior motion sensor is not activated.
- ▷ The indicator lamp goes out when the vehicle is unlocked: no manipulation or attempted intrusions have been detected in the period since the system was armed.

Online Edition for Part No. 01 41 0 159 867 - © 07/05 BMW AG

▷ The indicator lamp flashes for 10 seconds after the vehicle is unlocked: an attempted entry has been detected in the period since the system was armed.

Following triggering of an alarm, the indicator lamp will flash continuously.

Tilt alarm sensor

The tilt of the vehicle is monitored. The alarm system reacts, for example, if someone attempts to steal the wheels or tow the vehicle.

Interior motion sensor

In order for the interior motion sensor to function properly, the windows and panorama glass roof must be completely closed.

Avoiding unintentional alarms

The tilt alarm sensor and interior motion sensor may be switched off at the same time. This prevents unintentional alarms, e.g. in the following situations:

▷ In duplex garages
▷ When transporting on car-carrying trains
▷ If animals are to remain in the vehicle.

To switch off the tilt alarm sensor and interior motion sensor:

Press the button on the remote control twice consecutively.

The indicator lamp lights up briefly and then flashes continuously. The tilt alarm sensor and the interior motion sensor are switched off until the next unlocking and locking actions are executed.

⚠ To prevent injuries, exercise care when closing the windows and keep them in your field of vision until they are shut.
Always take along the ignition key when you leave the vehicle, as otherwise children could, for example, operate the windows and injure themselves.◀

Opening and closing windows

As of ignition key position 1:

▷ Press the switch up to the resistance point:
The window continues to move downward as long as you continue to hold the switch
▷ Briefly press the switch beyond the resistance point:
The window moves downward auto-

matically. Briefly press the switch again to stop the opening movement.

You can close the windows in the same manner by pulling the switch.

After the ignition has been switched off:

You can still operate the windows for approx. 1 minute, as long as no door has been opened.

For the convenience mode via the remote control or the door lock, refer to pages 31, 33.

Anti-trapping mechanism

A contact strip is integrated into the inner side of each of the upper window frame sections. If pressure is exerted against this contact strip while a window is being raised, the system will respond by stopping the window and then retracting it a small distance.

Despite the anti-trapping mechanism, be extremely careful that the closing path of the window is not obstructed whenever it is closed. Otherwise, an object might not touch the contact strip in some situations, with very thin objects, for instance. You can disable the anti-trapping mechanism by pulling the switch beyond the resistance point and holding it.
Because the power windows are sealed at high pressure to prevent wind noise when closed, a powerful motor is required for efficient closing. When closing the windows, always ensure that they are not obstructed in any way. Unsupervised use of these systems can result in serious personal injury. Remove the ignition key to deactivate the power windows whenever you leave the vehicle. Never leave the keys in the vehicle with unsupervised children. Never place anything that could obstruct the driver's vision on or next to the windows.◀

Safety switch

With the safety switch, you can prevent the rear windows from being opened or closed via the switches in the rear passenger area, by children, for example. You can also prevent adjustments of the power rear-seat backrests from the rear passenger area, refer to page 48.

Always press the safety switch when children ride in the rear, otherwise unchecked closing of the windows could lead to injuries.◀

Online Edition for Part No. 01 41 0 159 867 - © 07/05 BMW AG

Panorama glass roof*

To avoid bodily injuries, be sure to watch the panorama glass roof while closing. Always take along the ignition key when you leave the vehicle, as otherwise children could, for example, operate the roof and injure themselves.◀

The panorama glass roof is operational with the ignition key in position 2.

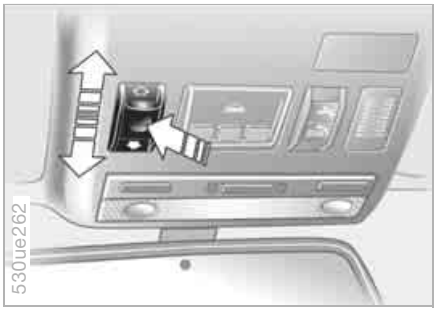

Raising, opening, closing

Press the switch or slide it in the desired direction up to the resistance point.
Release the switch to stop the motion.

The sliding visor is opened slightly when the panorama glass roof is raised.

The panorama glass roof can be opened or closed independently with the sliding visor open.

Ventilation setting:
The panorama glass roof is raised and the sliding visor is opened slightly:
Briefly press the switch twice consecutively.

After the ignition has been switched off:
You can still operate the roof for approx. 1 minute, as long as no door has been opened.

Automatic opening and closing

Briefly press the switch beyond the resistance point and then release it.
Briefly pressing the switch again stops the motion.

Opening and closing panorama glass roof and sliding visor together:
Briefly press the switch beyond the resistance point twice consecutively.
Briefly pressing the switch again stops the motion.

Comfort position

Each time the panorama glass roof is completely opened or closed, it stops in the comfort position. Use the switch to continue the motion after this if you wish.

In the comfort position, the wind noises in the interior are reduced.

Anti-trapping mechanism

If the panorama glass roof or sliding visor encounter resistance when closing from roughly one third of the roof opening or when closing from the raised position, the closing action is interrupted and the panorama glass roof and sliding visor reopen a little.

⚠ Despite the anti-trapping mechanism, inspect the roof's travel path prior to closing it, as the safety system might fail to detect certain kinds of obstructions, such as very thin objects, and the roof would continue closing. The anti-trapping mechanism for closing the panorama glass roof is deactivated if the switch is pressed beyond the resistance point and held there. The closing action is interrupted when you release the switch.◀

Following a power failure

Following interruptions in electrical power, for instance when the battery is disconnected, it is possible that the panorama glass roof will extend to its tilt-up position, but fail to respond to other commands. The system must be initialized. BMW recommends having this work carried out by your BMW Sports Activity Vehicle center.

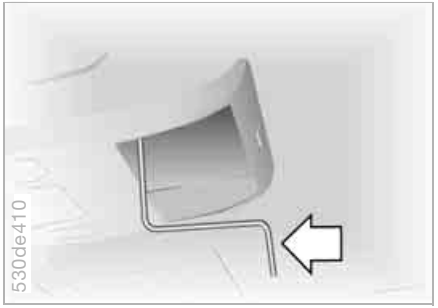

Manual operation

In the event of an electrical malfunction, you can operate the panorama glass roof manually.

1. Take the Allen wrench and screwdriver from onboard tool kit, refer to page 160
2. Remove the cover panel on the headliner. To do so, insert the screwdriver from behind slightly off-center and carefully pry the cover out
3. Insert the Allen wrench into the opening provided and turn the panorama glass roof in the desired direction.

Online Edition for Part No. 01 41 0 159 867 - © 07/05 BMW AG

The ideal sitting position can make a vital contribution to relaxed driving that is as fatigue-free as possible. In conjunction with the safety belts, the head restraints and the airbags, the seat position also plays an important role for the passive safety of the occupants in an accident. To ensure that the safety systems operate with optimized efficiency, we strongly urge you to follow the instructions contained in the section below.

For additional information on transporting children safely, refer to page 57.

Airbags

Always maintain an adequate distance between yourself and the airbags. Always hold the steering wheel by its rim, with hands at the 9 o'clock and 3 o'clock positions to minimize the risk of injuries to your hands and arms in the event of airbag deployment.
No one and nothing is to come between the airbags and the seat occupant. Do not use the cover of the front airbag on the front passenger side as a storage area. Make sure that the front passenger is correctly seated and does not rest feet or legs on the instrument panel, as otherwise leg injuries can occur if the front airbag is triggered.

Make sure that the occupants do not rest their heads on side or head airbags, as otherwise injuries can occur if the airbags are triggered.◀

Even if you adhere to all instructions, injuries resulting from contact with airbags cannot be fully excluded, depending on the circumstances. The ignition and inflation noise may provoke a mild – usually temporary – hearing loss in extremely sensitive individuals.

For airbag locations and additional information on airbags, refer to page 55.

Head restraint

A correctly adjusted head restraint reduces the risk of cervical injuries in accidents.

Adjust the head restraint so that its center is approximately at the height of the ears, as otherwise there is an increased risk of injury in an accident.◀

Safety belt

For every trip, use the safety belt on all occupied seats. Airbags complement the safety belt as an additional safety device, but they do not represent a substitute.

Your vehicle has five seats that are all equipped with a safety belt.

At all times, occupants should sit upright and be properly restrained – infants and small children in appropriate child-restraint systems; larger children and adults using the safety belts. Each safety belt should always be used by only one person; babies and children may not ride on the lap of another passenger.
In addition, pregnant women should always wear a safety belt, making especially sure that the belt rests low on the hips in the lap area, and does not press against the abdomen.
Do not route the belt across your neck or run it across sharp edges. Be sure that the belt does not become caught or jammed. Wear the safety belt without twisting, snugly across the lap and shoulders, as close to the body as possible. Be sure not to route it over solid or breakable objects, otherwise the belt can slip over the hips in the lap area in a

frontal impact and injure the abdomen. Avoid wearing clothing that prevents the belt from fitting properly and pull the belt in the upper body area periodically to readjust the tension in order to avoid a reduction in the restraint of the safety belt.◀

If the middle safety belt in the rear is used, the wider seatback must be locked, refer to page 124, otherwise the safety belt has no restraining action.

Fasten safety belt, refer to page 49.

Seats

Note before adjusting

Never try to adjust your seat while operating the vehicle. The seat could respond with unexpected movement and the ensuing loss of vehicle control could lead to an accident. On the front passenger side as well, do not tilt the backrest too far toward the rear while driving. Failure to observe this precaution can prevent the belt from providing effective protection against injury, as the passenger could slide under the belt in an accident.◀

Also observe the information on the safety belts on page 49 and on the head restraints on page 47.

Seat adjustment

▷ Mechanical seat adjustment, refer to following columns
▷ Power seat adjustment, refer to page 46
▷ Head restraints, refer to page 47
▷ Power rear-seat backrest adjustment, refer to page 48

Online Edition for Part No. 01 41 0 159 867 - © 07/05 BMW AG

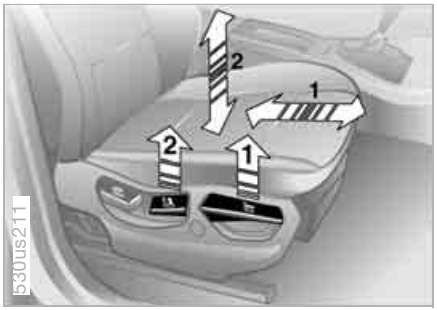

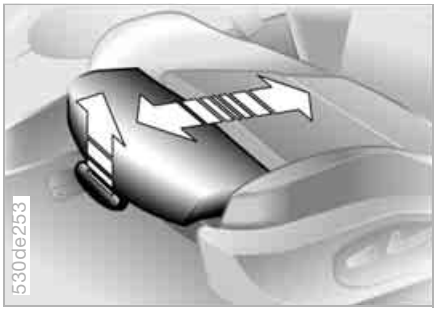

Seat adjustment

1 Backward/forward
Pull the lever and slide the seat to the desired position.
After you release the lever, move the seat forward or backward slightly so that it engages fully.

2 Height
Pull the lever and apply weight to or remove weight from the seat as needed.

3 Backrest
Pull the lever and apply weight to or remove weight from the backrest as needed.

⚠ Comply with the adjustment instructions on page 43. Failure to do so could result in diminished personal safety.◀

Sports seat* adjustment

You can also adjust the thigh support:

Pull the lever and adjust the position of the thigh support for your personal comfort.

Power seat adjustment*

Seat adjustment

1 Angle

2 Backward/forward

3 Cushion height

4 Backrest angle

Adjust the head restraint manually, refer to page 47.

⚠ Comply with the adjustment instructions on page 43. Failure to do so could result in diminished personal safety.◀

Comfort seat* adjustment

This seat allows you to make additional adjustments for

1 Lumbar support

2 Shoulder support

3 Head restraint height

Lumbar support:

You can also adjust the contours of the backrest to obtain additional support in the lumbar region.

The upper hips and spinal column receive supplementary support to help you maintain a relaxed, upright sitting position.

▷ Increase or decrease curvature: push switch forward or backward.

▷ Shift curvature up or down: push switch up or down.

Online Edition for Part No. 01 41 0 159 867 - © 07/05 BMW AG

Power seat adjustment*

Shoulder support:

Move the switch in the direction of the arrow to adjust the tilt angle of the shoulder support.

You can use the adjustable upper backrest for supplementary support in the shoulder region. This provides a relaxed sitting position and helps relieve stress on the shoulder muscles.

For optimum adjustment, the following is recommended:

Driver and front passenger:

1. Adjust the upper backrest section to its extreme rear position
2. Adjust for the optimal sitting position as described on page 43
3. Bring the upper backrest section further forward until your shoulders are well supported.

Front passenger's seat adjusted for relaxed traveling:

1. Adjust the upper backrest section to its extreme rear position
2. Tilt the backrest down to a slightly more horizontal angle
3. Bring the upper backrest section forward until your shoulders are well supported.

Make corrections in the forward/backward adjustment of the seat to ensure that the safety belt still fits firmly against your body. If you do not do this, the protection provided by the safety belt may be reduced.◀

Head restraint height:

Move the switch in the desired direction.

Head restraints

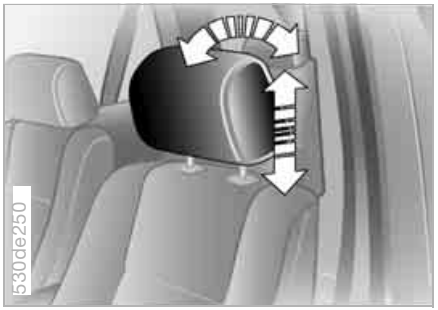

A correctly adjusted head restraint reduces the risk of cervical injuries in accidents.

Adjust the head restraint so that its center is approximately at the height of the ears, as otherwise there is an increased risk of injury in an accident.◀

Adjustments

To adjust the angle of the front head restraints, tilt the head restraint to the desired angle.

To adjust the height of the front or rear head restraints, pull the head restraint up or push it down.
Power height adjustment, refer to page 46.

Head restraints

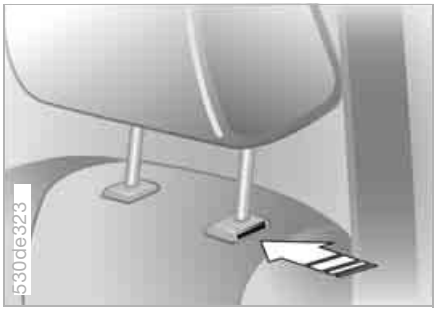

Removal – front

1. Pull the head restraint upward to the stop
2. Press the button, refer to arrow, and remove the head restraint.

Installation – front

1. Press the button, refer to arrow, and insert the head restraint into the guides
2. Adjust the head restraint for your personal comfort.

Removal and installation – rear

To remove the head restraint, pull it outward with a firm movement. To install it, press it down firmly.

Power rear-seat backrest adjustment*

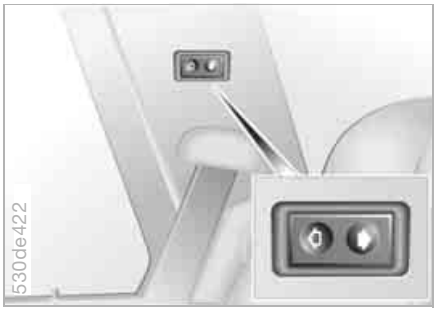

You can make separate adjustments of the backrest tilt angle on the right and left sides.
You can select a comfortable sitting position and also increase the capacity of the cargo area by moving the backrests into their full, upright position.

From the rear seats: press the corresponding switch.

▷ You can prevent adjustments of the power rear-seat backrest from the rear passenger area with the safety switch for the power windows, refer to page 40.◀

From the cargo area: the switches are located on both sides of the cargo area.

Comply with the instructions on page 43. Failure to do so could result in diminished personal safety.◀

Use the safety belts on all occupied seats for every trip. Airbags complement the safety belt as an additional safety device, but they do not represent a substitute.

Fastening

Make sure you hear the latch plate engage in the belt buckle.

Releasing

1. Press the red button in the belt buckle
2. Hold the belt firmly
3. Guide the belt back into its reel.

In the back, the middle safety belt buckle is provided for use exclusively by the middle passenger.
If it is not possible to extract the center belt, this indicates that the larger backrest is not securely locked, refer to page 124.◀

Safety belt reminder for front seats

Indicator lamp flashes or lights up. In addition, a signal sounds and, depending on the equipment, a message* appears in the Check Control. Please check to make sure safety belts are correctly fastened.

The belt reminder is activated when the safety belt on the driver's side has not yet been fastened.
The belt reminder is also active at speeds greater than approx. 5 mph/ 8 km/h when the passenger belt has not yet been fastened, heavy objects are placed on the front passenger seat, or passengers sitting in the front remove their safety belts.

Safety belt height adjustment

You can adjust the safety belts to fit your own physical dimensions by using the safety belt height adjustment:

Slide the button up or down as required.

Also observe the instructions on adjusting the seats on page 44.

Damage to safety belts

If the safety belts are damaged or stretched in an accident: have the entire belt system, including the tensioning mechanisms, replaced at your BMW Sports Activity Vehicle center or at a workshop that works according to BMW repair procedures with correspondingly trained personnel. Have the belt anchorage points inspected for damage at the same time. Failure to observe this precaution may prevent the safety belts from effectively providing optimal protection when needed.
If a child-restraint system was in the vehicle during an accident, consult the manufacturer's instructions regarding replacement.◀

Seat, mirror and steering wheel memory*

You can store and recall three different seat, exterior mirror and steering wheel positions. The illustration shows the buttons on the seat for making these position adjustments.

The adjustment of the lumbar support is not stored in the memory.◀

Storing

1. Turn the ignition key to position 1 or 2
2. Adjust the desired positions for the seat, exterior mirror and steering wheel
3. Press the MEMORY button: LED in the button lights up
4. Press memory button 1, 2 or 3, as desired: LED goes out.

Online Edition for Part No. 01 41 0 159 867 - © 07/05 BMW AG

Calling up a stored setting

Do not call up a position from the memory while the vehicle is moving. There is a risk of accident from unexpected movement of the seat or steering wheel.◀

Convenience function:

1. Open the driver's door after unlocking the vehicle or place the ignition key in position 1
2. Briefly press memory button 1, 2 or 3, as desired.
   Movement stops immediately when one of the seat-adjustment or memory buttons is activated during the adjustment process.

Security function:

1. With the driver's door closed and the ignition key either removed or in position 0 or 2
2. Maintain pressure on the desired memory button 1, 2 or 3 until the adjustment process is completed.

If you press the MEMORY button accidentally: press the button again – the LED goes out.◀

You can have your vehicle programmed to automatically dial in your own individual adjustment settings for the seat, mirrors and steering wheel whenever you use your personal remote control to unlock the vehicle.◀

If you make use of this function, be sure that the footwell behind the driver's seat is unobstructed before unlocking the vehicle. If you fail to do so, any persons or objects behind the seat could be injured or damaged by a rearward movement of the seat.◀

Passenger-side exterior mirror tilt function

Automatic curb monitor

Activating:

1. Select the driver's mirror with the mirror selection switch
2. When you engage reverse gear or selector-lever position R, the exterior mirror glass on the front passenger side tilts downward slightly. This allows the driver to see the area immediately adjacent to the vehicle – such as a curb – when parking, etc.

Deactivating:

Slide the mirror selection switch to the passenger's side position.

Online Edition for Part No. 01 41 0 159 867 - © 07/05 BMW AG

Heated seats*

Front

The seat cushion and backrest can be heated when the ignition key is in position 2.

You can call up different heating modes by repeatedly pressing the button.

You can also switch off the higher heating modes directly:
Press the button and hold it slightly longer.

Rear

The operating concept is the same as for the front heated seats. You can select between two heating modes.

Steering wheel

Adjustments

The steering wheel can be moved in any of four directions. Adjust the steering wheel by moving the control lever in the desired direction.

⚠ Do not adjust the steering wheel while the vehicle is moving. There is a risk of accident from unexpected movement.◀

To store the steering wheel setting, refer to Seat, mirror and steering wheel memory on page 50.

Online Edition for Part No. 01 41 0 159 867 - © 07/05 BMW AG

Steering wheel

Automatic steering wheel adjustment

only in conjunction with seat, mirror and steering wheel memory

In order to make it easier to get into and out of the vehicle, the steering wheel automatically moves into the top position and returns to the driving or memory position.

This automatic feature is influenced by the position of the ignition key and by the driver's door.

Steering wheel heater*

The steering wheel heater functions in ignition key position 2.

Press the button to activate or deactivate this system.

The LED in the button lights up when the steering wheel heater is switched on.

If your vehicle is not equipped with steering wheel heater, the button for the recirculated-air mode is located here, refer to page 23.

Mirrors

Exterior mirrors

The mirror on the passenger's side is more curved than the driver's mirror. Objects reflected in the mirror are closer than they appear. Do not attempt to estimate the distance to following traffic based on the view in the mirrors, as otherwise an increased accident risk will result.◀

Online Edition for Part No. 01 41 0 159 867 - © 07/05 BMW AG

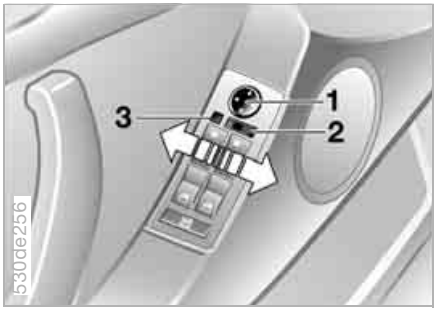

1 Adjustments
2 Switching to the other mirror or to the automatic parking function*
3 Folding mirrors in and out*

To store the mirror settings, refer to Seat, mirror and steering wheel memory on page 50.

Adjusting manually

The mirrors can also be adjusted manually by pressing the edges of the mirror glass.

Folding mirrors in and out

Pressing button 3 allows you to fold mirrors in and out up to a speed of 6 mph/10 km/h. This is advantageous, for example, in narrow streets or for bringing mirrors that have been manually folded-in back into the correct position.

⚠ Before going through a car wash, fold the exterior mirrors inward manually or using button 3; otherwise they could be damaged, depending on the width of the car wash system.◀

Automatic heating

Below a certain outdoor temperature, both exterior mirrors are automatically heated when the motor is running or the ignition is switched on.

Interior rearview mirror

To reduce glare from vehicles behind you when you are driving at night, tilt the mirror by turning the button.

Online Edition for Part No. 01 41 0 159 867 - © 07/05 BMW AG

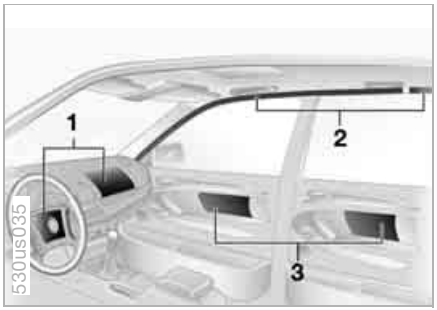

1 Front airbags
2 Head airbags
3 Side airbags for front and rear*

Protective action

Comply with the instructions on page 43. Failure to do so could result in diminished personal safety.◀

The front airbags supplement the safety belts by helping to provide additional protection for the front-seat occupants in the event of a severe frontal impact in which the protection afforded by the safety belts alone may no longer be sufficient. The head airbag and side airbag help provide protection in the event of a side impact. The respective side airbag is designed to help support the body at the side of the chest region. The Side Impact Head Protection System protects the head.

The airbags are intentionally not triggered in every impact situation, e.g. not in minor accidents or rear-end collisions.

Stickers on the rear door frame indicate the status of the rear side airbags. If the status cannot be clearly recognized, or if you want to have the airbags activated/deactivated, please contact your BMW Sports Activity Vehicle center.◀

For information on the correct sitting position, refer to page 43.

Do not apply adhesive materials to the cover panels of the airbags, cover them or modify them in any other way.
Do not attempt to remove the airbag restraint system from the vehicle. Do not modify or tamper with either the wiring or the individual components in the airbag system. These include the padded steering wheel hub, the instrument cluster, the side trim panels, the doors and the roof pillars or the sides of the headliner. Do not remove or dismantle the steering wheel yourself.
Do not touch the individual components directly after the system has been triggered, otherwise there is a danger of burns. If the airbag restraint system malfunctions, needs to be decommissioned, or has been triggered, only entrust the necessary repair work to a BMW Sports Activity Vehicle center or a workshop that works according to BMW repair procedures with correspondingly trained personnel and has the required explosives permits for testing, repair, dismantling or scrapping of the airbag generators. Unprofessional attempts to service the system could lead to failure in an emergency or undesired airbag activation, either of which could result in personal injury.◀

Warnings and information on the airbags is also provided on the sun visors.

Automatically deactivating front passenger airbags

The occupation of the seat is detected by evaluating the imprint on the occupied seat surface of the front passenger seat. The front and side airbag on the front passenger side are activated or deactivated accordingly by the system.

▷ The current status of the front passenger airbag, i.e. deactivated or activated, is indicated by the indicator lamp over the interior rearview mirror, refer to Status of front passenger airbags in the following.◀

⚠ Before transporting a child on the front passenger seat, observe the safety information and handling instructions under Transporting children safely, refer to page 57.
The front and side airbag on the front passenger side can be deactivated for teenagers and adults in certain seat positions; then the indicator lamp for the front passenger airbags lights up. In these cases, change the seat position so that the front passenger airbags are activated and the indicator lamp goes out. If the desired status cannot be produced by changing the seat position, transport the corresponding person on the rear seat. Do not install protective covers, seat cushions, ball mats or other objects on the front passenger seat which are not specially recommended by BMW. Do not lay objects under the seat which could press against the seat from below. Otherwise a correct evaluation of the occupied seat surface cannot be ensured.◀

Status of front passenger airbag

One of the illustrated indicator lamps is located above the interior rearview mirror.

The indicator lamp for the front passenger airbags indicates the operating status of the front and side airbag on the front passenger side depending on the seat occupation. The indicator lamp shows whether the front passenger airbags are activated or deactivated.

▷ The indicator lamp lights up when a child in a child restraint system intended for the purpose is properly detected on the seat.
The front and side airbag on the front passenger side are not activated

Online Edition for Part No. 01 41 0 159 867 - © 07/05 BMW AG

▷ The indicator lamp does not light up when, for example, a correctly seated person of sufficient height is detected on the seat. The front and side airbag on the front passenger side are activated
▷ The indicator lamp does not light up when the seat is empty.
The front and side airbag on the front passenger side are not activated.

Operational readiness of airbag system

As of ignition key position 1, the warning lamp in the instrument cluster lights up for a short time, thus indicating the operational readiness of the entire airbag system and the safety belt tensioners.

Airbag system malfunction:

▷ Warning lamp does not light up as of ignition key position 1
▷ Warning lamp lights up continuously.

Have the airbag system checked immediately if a malfunction occurs, as otherwise there is a danger of the system failing to respond in the expected manner in an accident of corresponding severity.◀

The right place for children

Do not leave children unattended in the vehicle, as otherwise they could endanger themselves and other persons, e.g. by opening the doors.◀

In principle, all seats in your BMW except the driver's seat are suitable for mounting universal child restraint systems for all ages which are approved for the respective age group.

Children always in the rear:

Accident research shows that the safest place for children is on the back seat.

Only transport children under 13 years of age or less than 5 ft/ 150 cm tall in the rear in child restraint systems intended for the respective age, weight and height of the child. Otherwise there is an increased danger of injury in an accident.◀

Children 13 years of age or older must wear a safety belt as soon as a suitable child restraint system can no longer be used due to their age, size and weight.

All rear seat positions in your vehicle comply with the recommendations of the standard SAE J1819 for the safe securing of child restraint systems in motor vehicles.

Exception for front passenger seat:

Should it be necessary to use a child-restraint system on the front passenger seat, the front and side airbags must be deactivated. Otherwise, there is an increased risk of injury for the child when the airbags are triggered, even with a child-restraint system. Your BMW Sports Activity Vehicle center will be happy to advise you.◀

More information on automatic deactivation of the front passenger airbags, refer to page 56.

Installing child-restraint systems

Follow the child-restraint system manufacturer's instructions when selecting, installing and using child-restraint systems. Otherwise the degree of protection can be reduced.◀

Commercially available child restraint systems are designed for securing with a lap belt or with the lap belt section of a three-point belt. Incorrectly or improperly installed child restraint systems can increase the risk of injury for children. Always follow the instructions for installing the system exactly.

On front passenger seat:

Before mounting a child restraint system on the front passenger seat, make sure that the front and side airbag on the front passenger side are deactivated, as otherwise there is an increased risk of injury if the airbags are triggered.◀

Before mounting a universal child-restraint system, move the front passenger seat into the highest position to achieve the best possible belt routing. Do not change this seat height.

Child-restraint system security

All rear safety belts and the safety belt for the front passenger can be locked to prevent them from being pulled out, enabling them to be used for securing child restraint systems.

Locking safety belt:

1. Secure child restraint system with the belt
2. Pull out belt webbing completely
3. Allow belt webbing to be pulled in and pull taut against child restraint system. The safety belt is locked.

Unlocking safety belt:

1. Open belt buckle
2. Remove child restraint system
3. Allow belt webbing to be pulled in completely

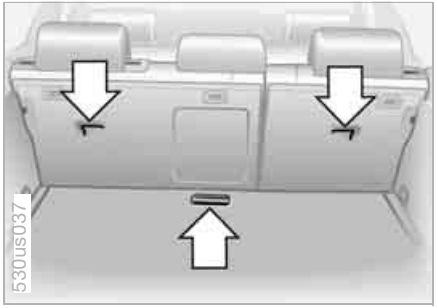

Child restraint system with tether strap

There are three additional mounting points for child restraint systems with a tether strap, refer to arrows.

Online Edition for Part No. 01 41 0 159 867 - © 07/05 BMW AG

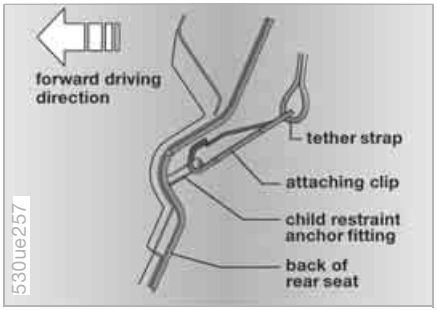

The illustration shows the fastening of the tether strap for the outer seats.

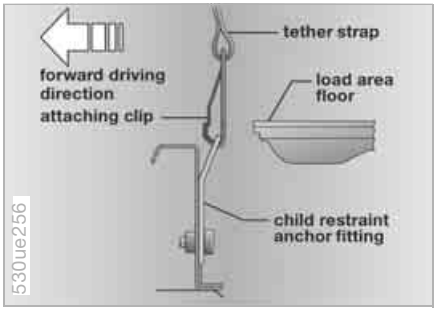

The illustration shows the fastening of the tether strap for the middle seat.

Routing of the tether strap:

1. Push head restraint upward
2. Guide securing strap through head restraint bracket
3. Slide the head restraint into the bottom position.

When using the cargo area roll-up cover, also route the tether strap between the rear backrest and the casing of the roll-up cover.

LATCH child-restraint fixing system

LATCH: Lower Anchor and Tethers for CHildren.

To attach a LATCH child's seat, follow the operating and safety instructions of the system manufacturer.◀

The rear outer seating positions are provided with anchors for a LATCH child-restraint fixing system.

The illustration shows the left rear seat as an example. The mounts for attachment of the LATCH child-restraint fixing system are located behind the cover panels.

Remove cover panels by pulling them toward the front.
To remount, simply slide into place.

On trips

If the rear is equipped with side airbags, make sure that children do not lean out of the child's seat towards the door panels. Otherwise severe injuries can be caused if the side airbags are triggered.◀

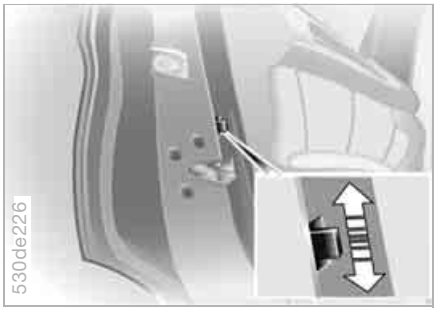

Child-safety locks of rear doors:

Slide down the safety lever on the rear doors:

The door can now be opened from the outside only.

Safety switch for power windows:

Always press the safety switch for the power windows, refer to page 40, when children are riding in the rear of the vehicle.

How the system functions

You have probably frequently wished that you could configure individual functions of your vehicle meet your own personal requirements. In developing your vehicle, BMW has included several user-defined functions in the vehicle's design. Your BMW Sports Activity Vehicle center can make these settings for you.

There are vehicle and person-related adjustments: Vehicle Memory and Key Memory. You can have up to four different basic positions configured for four different persons. The only requirement is that each person uses his or her own remote control key.

When your vehicle is unlocked with the remote control, the vehicle recognizes the individual user by means of a data exchange with the key, and makes adjustments accordingly.

In order for you to distinguish between the master keys with remote control, color-coded decals are supplied together with the keys.

What the system can do

Your BMW Sports Activity Vehicle center can provide you with details on the capabilities of the Vehicle Memory and Key Memory systems.

You will see this symbol throughout the Owner's Manual. It is to remind you at appropriate places of the settings that are available to you.◀

Following configuration of the memory functions, vehicle operation may differ from the description in the Owner's Manual. Should you want to sell your BMW some day, please remember to have the memory functions reset to the default state.◀

Examples for Vehicle Memory:

- ▷ Various signals that can serve as acknowledgment for locking and unlocking the vehicle, refer to pages 31, 33
- ▷ Deactivating/activating the Pathway lighting function, refer to page 100.

Examples for Key Memory:

- ▷ Automatic adjustment of the driver's seat, exterior mirror and steering wheel with settings stored in the memory for the individual driver when the vehicle is unlocked, refer to page 51
- ▷ Calling up customized settings for the automatic climate control when unlocking the vehicle, refer to page 109.

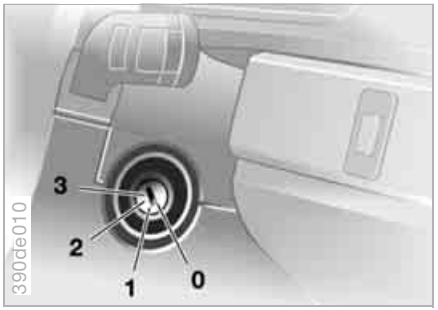

Ignition key positions

0 Steering lock engaged

1 Steering lock disengaged

2 Ignition on

3 Starting engine

Steering lock engaged

The key can only be inserted or removed in this position.

After removing the key, turn the steering wheel slightly to the left or right until you hear the lock engage.

If the key is not removed, an acoustic signal sounds after the driver's door is opened.

Automatic transmission:
Only move the selector lever from position P with the engine running.
To turn the key back to position 0 or to remove it, first place the selector lever in position P: interlock.◀

Steering lock disengaged

Slightly moving the steering often makes it easier to turn the key from 0 to 1.
Individual electrical devices are ready for operation.

Starting engine

Manual transmission:
Depress the clutch when starting the engine. If you do not, a lock prevents the engine from starting.◀

Starting engine

Before starting

▷ Engage the handbrake

▷ Be sure that the gearshift lever is in Neutral or the selector lever in Park if the vehicle is equipped with an automatic transmission

▷ Depress the clutch.
If the clutch is not depressed, the engine cannot be started

▷ Press the footbrake with an automatic transmission.

Do not run the engine in closed rooms, otherwise the inhalation of toxic exhaust gases can cause unconsciousness and death. The exhaust gases contain carbon monoxide, an odorless and colorless, but highly toxic gas.
Never leave an unattended vehicle with the engine running, as such a vehicle represents a potential safety hazard.
To prevent the vehicle from rolling, always select neutral or the position P and engage the handbrake before leaving the vehicle with the engine running.◀

When starting the engine, do not press the accelerator pedal.

Online Edition for Part No. 01 41 0 159 867 - © 07/05 BMW AG

Starting engine

Do not allow the engine to warm up by leaving it running while the vehicle remains stationary. Instead, begin to drive immediately at a moderate engine speed.

X5 3.0i:
Do not end the starting procedure too soon, but do not continue for longer than approx. 20 seconds. Release the ignition key immediately as soon as the engine starts.
X5 4.4i, 4.8is:
Your BMW is equipped with the convenience starting feature. With this feature, it is sufficient to turn the ignition key only briefly to position 3 'Start engine' and to let go of it right away. The starter actuation continues to operate automatically for a certain period of time and is stopped automatically as soon as the engine has started.
The automatic starting mode will not operate or will be canceled if the battery voltage is insufficient. The engine can be jump started, refer to page 174.

Should the engine fail to start on the first attempt, if it is very hot or cold, for instance:

▷ Press the accelerator pedal halfway down while engaging the starter.

Cold starts at altitudes above 3,300 ft/ 1,000 meters and at very low temperatures, from approx. +5 °F /–15 °C:

▷ For the initial starting attempt, allow the starter to remain engaged somewhat longer, approx. 10 seconds.

Engine idle speed is controlled by the engine computer system. Increased speeds at startup are normal and should decrease as the engine warms up. If engine speed does not decrease, service is required.

To prevent the battery from being drained, always switch off electrical devices that are not in use. Switch the ignition off when the vehicle is not being driven.

▷ Extended starting attempts, characterized by excessively frequent or long periods with the starter engaged, can lead to damage of the catalytic converter.◀

Switching off engine

Manual transmission:

1. Turn the ignition key to position 1 or 0
2. Shift into first gear or reverse.

Automatic transmission:

1. Shift into selector lever position P
2. Turn the ignition key to position 1 or 0.

⚠ Do not remove the ignition key when the vehicle is moving, otherwise, the steering could lock.
When leaving the vehicle, always remove the ignition key and lock the steering.
Manual transmission:
Always engage the handbrake when parking on slopes and inclined surfaces. Even placing the gearshift lever in 1st gear or reverse may not provide adequate resistance to rolling.
Automatic transmission:
Place the selector lever in the P position.◀

Automatic transmission:

The vehicle must be stationary and the selector lever in Park before you can remove the ignition key.

Handbrake

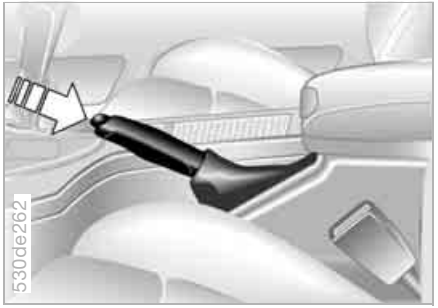

The handbrake is primarily intended to prevent the vehicle from rolling while parked; it brakes the rear wheels.

Engaging

The lever engages automatically when you pull it up and the indicator lamp comes on in the instrument cluster in ignition key position 2, refer to pages 19, 21.

Releasing

Pull up slightly on the lever, press the button and lower the lever.

If exceptional circumstances should make it necessary to engage the handbrake while the vehicle is in motion, do not pull it too strongly. In doing so, continuously press the button of the handbrake lever. Otherwise strong application of the handbrake can lead to overbraking of the rear axle and associated 'fishtailing' of the vehicle rear end.
Manual transmission:
Always engage the handbrake when parking on slopes and inclined surfaces. Even placing the gearshift lever in 1st gear or reverse may not provide adequate resistance to rolling.
Automatic transmission:
Place the selector lever in Park.◀

To prevent corrosion and one-sided braking action, occasionally apply the handbrake lightly when the vehicle is slowly coming to a stop if the traffic conditions are suitable.
The brake lamps do not light up when the handbrake is applied.

Manual transmission

Press the clutch all the way down each time you shift, pressing the gearshift lever into its proper end position.

Depress the clutch when starting the vehicle, too. If the clutch is not depressed, the interlock will prevent the engine from starting.

While shifting in the 5th/6th gear slot, press the gearshift lever toward the right, otherwise, accidental shifting into the 3rd or 4th gear could result in engine damage.◀

Online Edition for Part No. 01 41 0 159 867 - © 07/05 BMW AG

Reverse

Select only when the vehicle is stationary. Press the gearshift lever to the left to overcome the resistance.

As you do this, the backup lamps will turn on automatically when the ignition key is in position 2.

In addition to fully automatic operation, you can also manually shift with the Steptronic, refer to page 67.

Under normal operating conditions, fuel consumption is lowest when driving in position D.

Selector lever positions

P R N D M/S

The transmission range display varies in accordance with the equipment of your vehicle.

Starting engine

The engine can only be started in the selector lever position Park or Neutral.

Range selection

▷ The selector lever can be moved out of the P position with the ignition switched on or the engine running: interlock

▷ With the vehicle stationary, press the footbrake before shifting out of P or N, otherwise, the selector lever is blocked: shiftlock.
Keep the brake pedal pressed down until you start off. The vehicle will otherwise creep when a drive position is engaged.

A lock prevents accidentally shifting into the selector lever positions R and P. To deactivate the lock, press the button on the front of the selector lever knob, refer to arrow.

P Park

Select only when the vehicle is stationary. The transmission locks to prevent the rear wheels from turning.

R Reverse

Select only when the vehicle is stationary.

N Neutral, idle

For example, engage in automatic car washes. The vehicle can roll.

D Drive, automatic driving position

This position is designed for driving under all normal operating conditions. All forward gears are available.

Kick-down

The kick-down mode provides maximum acceleration.
Depress the accelerator pedal past the increased resistance point at the full-throttle position.

Online Edition for Part No. 01 41 0 159 867 - © 07/05 BMW AG

Sport Program and manual operation M/S

Shift selector lever from position D toward the left into the shifting slot M/S: the Sport Program is activated and DS appears in the instrument cluster. This position is recommended for a performance-oriented driving style.

Briefly pressing the selector lever toward the front or rear activates manual operation and Steptronic changes gears. The following display appears in the instrument cluster, depending on the model:

▷ 1 to 5 or 1 to 6
▷ M1 to M5 or M1 to M6.

Upshifts and downshifts are executed only when they will result in a plausible combination of engine and vehicle speed; thus, for example, a downshift that would cause the engine to overrev will not be executed by the system. The gear selected will appear briefly in the instrument cluster and then the current gear will reappear.

To return to automatic mode, move the selector lever toward the right into position D.

Malfunction

The warning lamp lights up or the message TRANS.FAILSAFE PROG appears in the Check Control. A malfunction has occurred in the transmission system. Avoid heavy loads.

Bring the vehicle to a stop. Move the transmission selector lever to P. Set the parking brake and switch the engine off by turning the ignition key to position 0.

Wait a few seconds, then start the engine.
If the indicator lamp goes out after a few seconds, normal transmission performance has been restored. You may continue to drive as usual. If the indicator lamp does not go out, you can place the selector lever in all positions, but the vehicle will now only drive forward with limited gear selection.
Have the system checked as soon as possible.

Information on jump starting, tow-starting and towing begins on page 174.

Online Edition for Part No. 01 41 0 159 867 - © 07/05 BMW AG

Turn signals/headlamp flasher

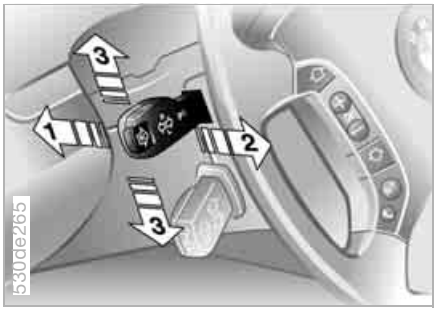

1 High beams

2 Headlamp flasher

3 Turn signals

Signaling briefly

Press lever to resistance point and hold for as long as you wish to signal.

▷ Atypically rapid flashing of the turn signal light indicates the failure of a turn signal lamp and when towing a trailer, may indicate the failure of one of the trailer's turn signal lamps.◀

Online Edition for Part No. 01 41 0 159 867 - © 07/05 BMW AG

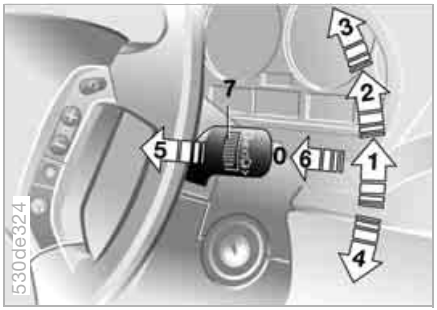

0 Wipers retracted
1 Intermittent mode or rain sensor
2 Normal wipe
3 Fast wipe
4 Brief wipe
5 Windshield washing
6 Special wash program*
7 Knurled wheel for control of the wipe interval or the sensitivity of the rain sensor

Fold-out position

The left wiper is partially concealed by the hood. To bring the wipers to roughly a vertical position, which is important when changing the wiper blades or when folding the wipers out during frosty weather, for example, proceed as follows:

▷ With the lever in position 1, switch off the ignition as soon as the wipers come to a stop.

If equipped with a rain sensor:

1. Switch on the wipers with the lever in position 1, 2 or 4
2. When the wipers are roughly vertical, switch the ignition off.

For changing the wiper blades, refer to page 160.

⚠ Fold the wipers back down onto the windshield before you turn the ignition key to position 1 or 2 again. If you do not, they could be damaged.◀

Intermittent mode

Not provided in vehicles with rain sensor.

You can set the wipe interval to four stages with the knurled wheel 7.
In addition, the wipe interval is varied automatically depending on road speed.

Rain sensor

The rain sensor automatically controls the wiper operation as a function of the rain intensity. It is located on the windshield, directly in front of the interior rearview mirror.

To activate the rain sensor:
Move the lever to position 1 as of ignition key position 1. The wipers travel once across the windshield, regardless of the weather conditions.

You can leave the lever permanently in position 1. It is then only necessary to activate the rain sensor as of ignition key position 1.
To do this, turn the knurled wheel 7 briefly.

To adjust the sensitivity of the rain sensor:
Turn the knurled wheel 7.

To deactivate the rain sensor:
Move the lever to position 0.

Deactivate the rain sensor when passing through an automatic car wash. Failure to do so could result in damage caused by undesired wiper activation.◀

Normal wipe

The system switches automatically to intermittent mode when the vehicle is stationary, not on vehicles with rain sensor.

Fast wipe

The wipers operate at normal speed when the vehicle is not moving, not on vehicles with rain sensor.

Windshield washing

The system sprays washer fluid against the windshield and activates the wipers for a brief period.

Special wash program*

As with 5; several additional wash cycles are carried out and the headlamps are cleaned*.
This program is recommended after you have driven on extremely dirty roads.

Headlamp washing*

▷ With the special wash program 6
▷ At appropriate intervals, the headlamps will also be cleaned upon actuation of the windshield washer function 5 while the vehicle's headlamps are switched on.

Do not use the washers if there is any danger that the fluid will freeze on the windshield. If you do so, your vision could be obscured. Use antifreeze to prevent this, refer to page 152.
Do not actuate washer systems when the fluid reservoir is empty, otherwise, the washer pump will be damaged.◀

Windshield washer nozzles

The windshield washer jets are heated automatically when the ignition key is in position 2.

Online Edition for Part No. 01 41 0 159 867 - © 07/05 BMW AG

Washer/wiper system/rain sensor*

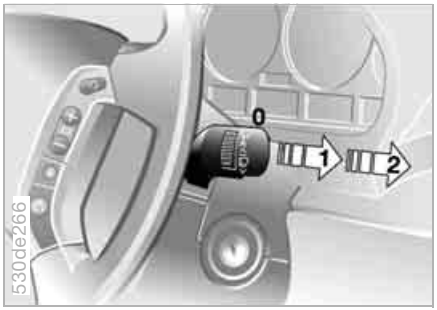

Rear window wiper

0 Retracted position of the rear window wiper

1 Rear window wiper in intermittent mode. When the transmission is shifted into reverse, continuous rear wiper operation is switched on automatically

2 Cleaning rear window

You can also program the interval:

▷ Switch briefly from position 0 to position 1

▷ Wait the desired interval time and then switch from position 0 to 1 again to establish the programmed interval; max. 30 seconds.

Programming is deleted:

▷ approximately 10 seconds after the lever is placed in position 0 or

▷ after the engine is switched off.

For changing the wiper blade, refer to page 160.

Cruise control*

You can automatically maintain and store any desired vehicle speed above approx. 20 mph/30 km/h.

You can use cruise control whenever the system is active while the engine is running.

On the sports steering wheel*, there are +/– buttons on the right side of the steering wheel for the cruise control.

⚠ Do not use the cruise control when unfavorable conditions do not permit driving at constant speed. Otherwise you could lose control of the vehicle and cause an accident. These unfavorable conditions include winding roads, heavy traffic or poor road conditions, e.g. snow, rain, ice or a loose road surface.◀

Cruise control*

Activating system

As of ignition key position 2:
Press the button; the indicator lamp in the instrument cluster comes on, refer to page 22. Cruise control is ready to use.

Deactivating system

Press the button repeatedly until the indicator lamp in the instrument cluster goes out.

The cruise control is also deactivated when the ignition key is turned to position 0.

The speed stored in the memory is deleted.

Maintaining and storing speed or accelerating

Briefly press button +:
The system maintains and stores the current vehicle speed. Every time you briefly press the button, the speed increases by approx. 0.6 mph/1 km/h.

Press and hold button +:
The vehicle accelerates without pressure on the accelerator pedal. When you release the button, the system maintains and stores the current speed.

On downhill grades, the controlled speed can be exceeded if the engine's braking action is insufficient. Speed can drop on uphill grades if the engine output is insufficient.

Deceleration

Briefly press button –:
When cruise control is active, every brief touch of the button reduces the speed by approx. 0.6 mph/1 km/h.

Press and hold button –:
With the cruise control active, the system automatically reduces the throttle opening to slow the vehicle. When you release the button, the system maintains and stores the current speed.

Interrupting cruise control

When the system is activated, press button 1. The indicator lamp stays on. You can use the cruise control again whenever required by resuming the speed that was stored last.

In addition, cruise control is interrupted automatically:

- ▷ When you apply pressure to the brake pedal
- ▷ When you apply pressure to the clutch pedal or when you move the automatic transmission selector lever from Drive to Neutral
- ▷ If you exceed or fall below the controlled speed for an extended period, by depressing the accelerator, for example
- ▷ When DSC Dynamic Stability Control is active.

Resuming stored setting

Press the button:
The vehicle accelerates to and maintains the last speed stored.

Online Edition for Part No. 01 41 0 159 867 - © 07/05 BMW AG

Odometer, outside temperature display

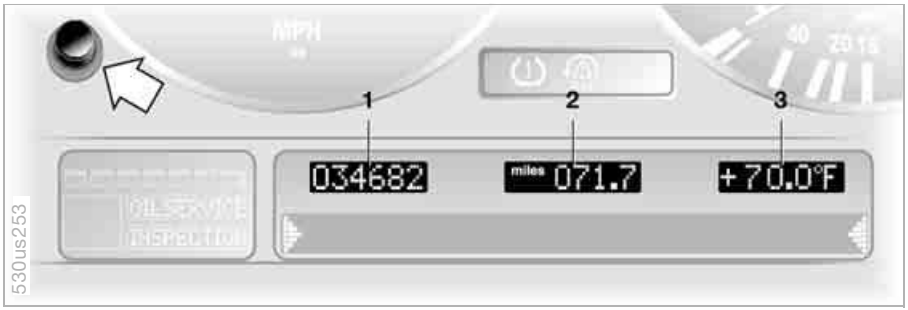

1 Odometer

2 Trip odometer

3 Outside temperature display

Odometer

You can activate the displays shown in the illustration with the ignition key in position 0 by pressing the button in the instrument cluster, refer to arrow.

The range of available displays varies according to your individual vehicle's equipment.

Trip odometer

To reset the trip odometer to zero, press the button, refer to arrow, with the ignition key in position 1 or 2.

Outside temperature display

The outside temperature appears on the display as of ignition key position 1.

You can change the units of measure °F / °C by

1. pressing and holding down the button, refer to arrow, with the ignition key in position 1 and
2. then turning the ignition key to 0. At the same time the units of measurement in the temperature display of the automatic climate control will be changed, refer to page 107.

Refer also to page 80.

Outside temperature warning

If the display drops to approx. +37.5 °F / +3 °C, a signal sounds as a warning and the display flashes for a brief period. There is an increased danger of ice.

⚠ Even at temperatures above +37.5 °F / +3 °C ice can form. Therefore, drive carefully, e.g. on bridges and sections of road in the shade, as otherwise there is an increased accident risk.◀

Tachometer

X5 3.0i, 4.4i

Do not operate the engine with the needle in the red overspeed zone of the gauge, refer to arrow.

In this range, the fuel supply is interrupted to protect the engine.

X5 4.8is

The orange warning sector gradually moves upward as the engine warms to its normal operating temperature. As the engine temperature increases, an increasing number of sectors in this warning panel go out.

Avoid allowing the engine speed to rise as far as the orange warning sector whenever possible.

Do not operate the engine with the needle in the red overspeed zone of the gauge, refer to arrow.

In this range, the fuel supply is interrupted to protect the engine.

Energy control

X5 3.0i, 4.4i

Shows the current fuel consumption. This allows you to see whether your current driving style is conducive to fuel economy with minimum exhaust emissions.

Online Edition for Part No. 01 41 0 159 867 - © 07/05 BMW AG

Engine oil temperature gauge

X5 4.8is

The general operating temperature lies between 176 °F/80 °C and 248 °F/ 120 °C. Do not exceed the maximum value of 302 °F/150 °C.

Fuel gauge

If the LED comes on and stays on, there are approx.
▷ 2.0 gal./8 liters, 6-cylinder engine
▷ 2.5 gal./10 liters, 8-cylinder engine
of fuel still in the tank.

Tank capacity: approx. 24.6 gal./ 93 liters.

If the tilt of the vehicle varies, when you are driving in mountainous areas, for example, the indicator may fluctuate slightly.

⚠ Refuel well before the tank is empty, otherwise engine functions will not be ensured. Damage can occur if you drive down to the last drop.◀

When you switch on the ignition, the LED lights up briefly to confirm that the system is operational.

Online Edition for Part No. 01 41 0 159 867 - © 07/05 BMW AG

Coolant temperature gauge

Blue

The engine is still cold. Drive at moderate engine and vehicle speeds.

Red

When you switch on the ignition, the warning lamp* comes on briefly to confirm that the system is operational.

If the warning lamp lights up during driving or the message COOLANT TEMPERATURE appears in the Check Control; the engine is overheated. Switch off the engine immediately and allow it to cool down.

Checking coolant level, refer to page 154.

Between blue and red zones

Normal operating range. The dial may drift up to the red field.

Service Interval Display

The range of available displays varies according to your individual vehicle's equipment.

Green lamps

The number of illuminated lamps decreases as the time for your next maintenance visit approaches.

Yellow lamp

This field appears together with OILSERVICE or INSPECTION.

Maintenance is due. Please contact your BMW Sports Activity Vehicle center for an appointment.

Red lamp

The maintenance deadline has been passed.

Online Edition for Part No. 01 41 0 159 867 - © 07/05 BMW AG

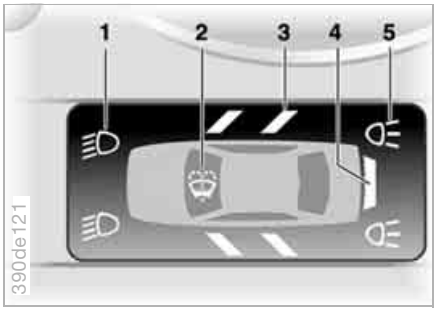

Graphic display*

The following alerts or status messages are displayed with icons as of ignition key position 2 until the defects are corrected:

1 Check low beams

2 Add washer fluid, goes out after approx. 1 minute

3 Door open

4 Tailgate open

5 Check brake and tail lamps. A defective center brake lamp is indicated by the upper symbol.

When you open the door after stopping, a warning signal sounds without a visual indicator for:

▷ LIGHTS ON
▷ KEY IN IGNITION LOCK.

Alphanumeric display*

Text messages are used to alert the driver to system malfunctions as of ignition key position 2. The alert is accompanied by an acoustic signal.

1 Status messages symbol

2 Display

3 CHECK button

Messages concerning system defects are differentiated based on two priorities:

Priority 1

These defects are immediately indicated by an acoustic signal and a flashing warning symbol 1. Simultaneous defects will be displayed consecutively. These status messages remain on the display until the defects are corrected. They cannot be deleted by pressing the CHECK button 3:

▷ RELEASE PARKINGBRAKE
▷ COOLANT TEMPERATURE
Temperature too high. Stop the vehicle immediately and switch off the engine, refer to pages 76 and 154
▷ STOP! ENGINE OILPRESS
Oil pressure too low. Stop the vehicle immediately and switch off the engine, refer to pages 19 and 152

Online Edition for Part No. 01 41 0 159 867 - © 07/05 BMW AG

▷ CHECK BRAKE FLUID
Level has dropped approx. to minimum. Have the brake fluid replenished as soon as possible, refer to page 155. Have the reason for the brake fluid loss eliminated by your BMW Sports Activity Vehicle center

▷ DSC/4x4 INACTIVE
DSC and/or four-wheel drive system xDrive has failed.
The stabilizing interventions of DSC and/or the four-wheel drive system xDrive are no longer available. Drive may be being exerted exclusively via the rear axle.
Have the system checked at the nearest BMW Sports Activity Vehicle center.
For additional information, refer to page 94

▷ SELFLEVEL SUSP.INACT*
Please consult the nearest BMW Sports Activity Vehicle center

▷ SELFLEVEL SUSP.INACT*
MAX. 35 MPH/MAX. 60 KM/H*
These messages are displayed consecutively.
Do not exceed a maximum speed of 35 mph/60 km/h.
Please consult the nearest BMW Sports Activity Vehicle center

▷ TRANSMISS'N OVERHEAT*
Reduce speed immediately and stop at a suitable location so that the system can cool down again. Please contact the nearest BMW Sports Activity Vehicle center.

▷ LIMIT*
Display when the programmed road-speed limit is exceeded, refer to page 85.

Priority 2

These displays appear for 20 seconds as of ignition key position 2. The warning symbols remain after the message disappears. You can open the messages again for display by pressing the CHECK button.

▷ TRUNKLID OPEN
This message only appears when starting off

▷ DOOR OPEN
This message appears after a minimal defined road speed has been exceeded

▷ FASTEN SEAT BELTS*
In addition, the indicator lamp with the belt symbol lights up and an acoustic signal sounds

▷ WASHER FLUID LOW
Too low, top up at the next opportunity, refer to page 152

▷ CHECK ENGINE OIL LEV
The oil level is at the absolute minimum point. Therefore, have the engine oil replenished as soon as possible, refer to page 152. Until then, do not drive more than approx. 30 miles/50 km.

▷ CHECK GAS CAP
Check to see whether the fuel filler cap has been closed properly, refer to page 25

▷ OUTSIDE TEMP. +23 °F/–5 °C
This display is only an example. The current temperature is displayed at outside temperatures of +37.5 °F/ +3 °C and below, refer also to page 73

▷ CHECK BRAKE LIGHTS
A lamp has failed or the electrical circuit has a malfunction, refer to page 163 or consult a BMW Sports Activity Vehicle center

▷ CHECK LOWBEAM LIGHTS
CHECK SIDE LIGHTS
CHECK REAR LIGHTS
CHECK FRONT FOGLAMPS
CHECK LICPLATE LIGHT
CHECK HIGHBEAM LIGHT
CHECK BACK UP LIGHTS
The respective lamp may have failed or the electrical circuit may be defective, refer to page 161 or consult a BMW Sports Activity Vehicle center

Online Edition for Part No. 01 41 0 159 867 - © 07/05 BMW AG

▷ TRANS. FAILSAFE PROG*
Please consult the nearest BMW Sports Activity Vehicle center, refer to page 67

▷ CHECK BRAKE LININGS
Have the brake pads inspected by your BMW Sports Activity Vehicle center, refer to page 140

▷ CHECK COOLANT LEVEL
Coolant too low, top off at the next opportunity, refer to page 154

▷ ENGINE FAILSAFE PROG
Fault in the engine electronics.
You can continue to drive with reduced engine output or engine speed.
Please have the system inspected by your BMW Sports Activity Vehicle center.

Displays after completion of trip

All of the malfunctions registered during the trip appear consecutively when the ignition key is turned to position 0.

The following displays will appear when appropriate:

▷ LIGHTS ON
▷ KEY IN IGNITION LOCK
▷ CHECK ENGINE OIL LEV
Replenish engine oil at the next opportunity, e.g. while refueling, refer to page 152.

This display appears when you open the driver's door after parking the vehicle. A supplementary acoustic signal also sounds.

Status messages remain available with the CHECK button 3 for a period of approx. three minutes after the display goes out and the key is removed from the ignition lock. If there are multiple messages, press the CHECK button repeatedly to view them all in sequence.

Checking Check Control

Press the CHECK button 3 with the ignition key in position 2:
CHECK CONTROL OK appears on the display.

No malfunctions are present in the monitored systems.

Computer

You can find a description of the computer below and on page 85 as well as in the Owner's Manual for Onboard Computer.

You can have the Check Control and computer messages displayed in a different language.◀

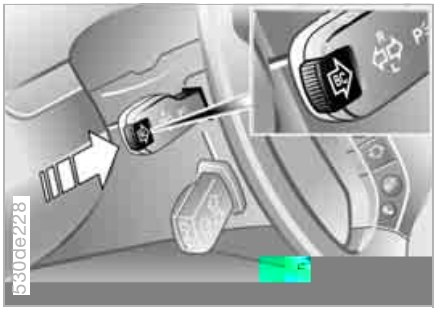

Mode selection

As of ignition key position 1, you can request information from the computer using the computer button in the turn signal lever.

A new function appears each time you briefly press the computer button.

The display sequence:

▷ Outside temperature
▷ Average fuel consumption
▷ Cruising range
▷ Average speed.

As of ignition key position 1, the last active setting is displayed.

The range of available displays varies according to your individual vehicle's equipment.

Outside temperature and average fuel consumption

You can change the units of measure °F/°C for the outside temperature display by

1. pressing and holding the trip odometer reset button with the ignition key in position 1 and
2. then turning the ignition key to 0. At the same time the units of measurement in the temperature display of the automatic climate control will be changed, refer to page 107.

Refer also to page 73.

The average fuel consumption is calculated for the time during which the engine is running.

Cruising range and average speed

Displays the estimated cruising range available with the remaining fuel. The fuel level is measured and the range is calculated taking into account the driving style over the last 20 miles/30 km.

Periods with the vehicle parked and the engine off are not included in the calculations of average speed.

Canceling display

You can hide the computer display by briefly pressing the button in the turn signal lever while the average speed is being displayed.

Restarting calculations

If you continue to press the computer button in the turn signal lever, the average values which were just displayed for fuel consumption and speed will be recalculated from that point. The engine must be running in order for this calculation to be executed.

Computer with alphanumeric display*

If your vehicle has Check Control with alphanumeric display, the system's computer is described beginning on page 85 and in the Owner's Manual for Onboard Computer.

Online Edition for Part No. 01 41 0 159 867 - © 07/05 BMW AG

Central display

The MID is used for centralized display and operation for the following onboard systems:

▷ Digital clock, e.g. time display, date
▷ Audio systems: radio, cassette, CD
▷ Computer, e.g. fuel consumption, cruising range
▷ Telephone, e.g. dialing

You will find notes and instructions for operating the digital clock and the computer on the following pages. Please refer to the separate Owner's Manuals for operating the audio systems, the telephone and the onboard computer.

▷ Any unrealistic numerical entries will not be accepted.
All stored data will be lost if the power supply is interrupted. Time display, switch-on times for parked car ventilation, distance and cruise control speed limit may have to be reset once the power supply has been reestablished.◀

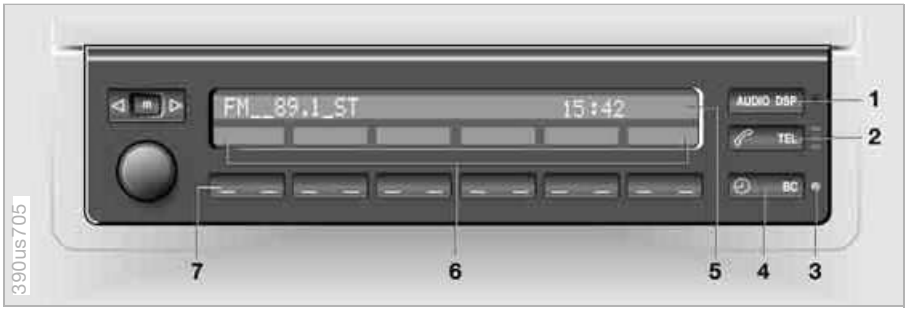

1 Function button for audio systems
2 Function button for the telephone
3 LED for parked car ventilation
▷ remains on if switch-on time is active
▷ flashes while operating
4 Function button for the digital clock and computer
5 Indicator display for the various onboard systems
6 Display for the entry and request buttons. Depending on the operating mode, the functions and options that can be selected with the buttons are displayed here
7 Entry and request buttons for operating the various onboard systems

Digital clock in MID

To avoid endangering yourself or other road users, only make entries when the vehicle is stationary.◀

Displaying time or date

Press the left side of the button.

Display shows:

You can have the time displayed in 12 or 24 hours.

To change the display:

Press the left side of the button.

If the 12-hour time display is in use, AM or PM appears after the time.

Changing time

Press the left side of the button.

Press the right side of the button:
The dots flash on the display.

To change the setting:

Press the left/right side of the button, or hold the button down.

To store the entry:

Press the right side of the button.

Changing date

Press the left side of the button.

Press the button.

Press the right side of the button:
The dots and the DATE display flash.

To change the setting:

Press the left/right side of the button, or hold the button down.

To store the entry:

Press the right side of the button.

The clock takes leap years into account and therefore does not have to be reset manually.

Online Edition for Part No. 01 41 0 159 867 - © 07/05 BMW AG

Reminder signal

You can program a reminder signal – memo – to be heard every hour, so that you are sure not to miss a news broadcast.

Press the left side of the button.

Press the button:
MEMO OFF appears on the display for entry and request buttons, and the tone symbol will appear in the upper right of the display.

A signal is then heard 15 seconds before each hour.

Stopwatch

Press the left side of the button.

Press the button.

Display shows:

To start the stopwatch function:

Press the right side of the button.

To take an intermediate time reading:

Press the button.

Press the button:
The stopwatch display can be seen counting up; the stopwatch continues to run.

To halt the stopwatch:

Press the right side of the button.

▷ The stopwatch is halted when the ignition key is turned back to 0, but starts to run again when the ignition key is turned to 1.◀

Entering switch-on times for parked car ventilation

You can enter two different switch-on times.
The ventilation will switch off automatically after 30 minutes.

▷ Please follow the instructions for operating the parked car ventilation that start on page 113.◀

Press the left side of the button.

Press the left/right side of the button.

Display shows:

Press the right side of the button:
Display flashes, e.g. TIMER 1.

To enter the time:

Press the left/right side of the button, or hold the button down.

To confirm the entry:

Press the right side of the button.

The activated time is marked with an asterisk.

The switch-on times remain stored until new entries are made.

You can change switch-on times that have already been stored by making a new time entry as described above.

When the switch-on time is active, the LED comes on in the MID. During actual operation of the ventilation, the LED flashes. The LED goes out when the system is switched off.

To activate/deactivate the time:

Press the button twice.

Switching parked car ventilation on and off directly

▷ The parked car ventilation function can only be requested in ignition key position 1.◀

Press the left side of the button.

Press the button.

Online Edition for Part No. 01 41 0 159 867 - © 07/05 BMW AG

To avoid endangering yourself or other road users, only make entries when the vehicle is stationary.◀

Computer calculations begin at the start of the journey.
Information can also be called up on the display by the remote control, refer to page 89.

Speed limit

Speed limit entry:

You can enter the road speed at which you wish to hear and see a reminder signal: a signal will sound, the word LIMIT will flash, and with the Check Control with alphanumeric display*, the speed limit warning stored in the memory will appear on the instrument cluster briefly: limit.

The speed limit reminder is only repeated if road speed has fallen at least 3 mph/5 km/h below the preset speed limit since the last time the speed limit reminder was triggered.

Press the right side of the button.

Press the button.

Press the right side of the button.

Display shows:

Enter the limit by pressing the function buttons.

To correct an entry:

Press the left side of the button and repeat the entry.

To store the entry:

Press the right side of the button.

To adopt the current speed as the speed limit:

Press the right side of the button.

Press the button.

Press the right side of the button twice.

To deactivate the speed limit:

Press the right side of the button.

Press the button.

The LIMIT display goes out, but the stored value is not lost and can be reactivated by pressing the LIMIT button.

Distance to destination

The remaining distance to the destination will be displayed on the screen. Enter the entire distance before starting the journey.

To enter:

Press the right side of the button.

Press the left side of the button.

Press the right side of the button.

Display shows:

You can enter the distance by pressing the function buttons.

To correct an entry:

Press the left side of the button and repeat the entry.

To store the entry:

Press the right side of the button.

To check a stored value:

Press the right side of the button.

Press the left side of the button.

Online Edition for Part No. 01 41 0 159 867 - © 07/05 BMW AG

Estimated time of arrival

When you have entered the distance to your destination, you can obtain an estimated time of arrival display that is continuously updated by the computer as your average driving period varies.

Press the right side of the button.

Press the right side of the button:
The estimated time of arrival is displayed.

Cruising range

The distance that the vehicle should cover on the remaining fuel in the tank is displayed.

Press the right side of the button.

Press the button:
The display shows the probable range.

Always refuel as soon as possible once your cruising range falls to below 30 miles/50 km, otherwise engine functions are not ensured and damage can occur.◀

The computer will only register fuel amounts over 1.8 gal/6 liters.

Fuel consumption

You can have the average fuel consumption displayed for two different distances, for example a complete journey and part of the journey.

To start the calculation, select the function with the engine running:

Press the right side of the button.

Press the left or right side of the button:
The display will show the average fuel consumption.

To restart the fuel consumption calculation:

Press the left or right side of the button.

Press the right side of the button.

Online Edition for Part No. 01 41 0 159 867 - © 07/05 BMW AG

Speed

You can open a display of the vehicle's average speed.

To start the calculation, select the function with the engine running:

Press the right side of the button.

Press the button:
The display shows the average speed.

To recalculate the speed:

Press the right side of the button.

Extended immobilizer function

You can establish a code that will prevent the engine from being started unless the code is entered.

If you do not have access to the code, the emergency deactivation procedure will have to be carried out, refer to next page.

To establish and activate the code:

Press the right side of the button.

Press the left side of the button.

Display shows:

Enter the code with the function buttons.

To correct an entry:

Press the left side of the button and repeat the entry.

To store the entry:

Press the right side of the button.
Turn the ignition key to position 0.

To deactivate the code:

When you are asked to enter the code with the ignition key in position 1 or 2:

▷ Enter the code at the function buttons.

Press the right side of the button.

After the code has been entered correctly and confirmed with the SET button, the time display appears.

Online Edition for Part No. 01 41 0 159 867 - © 07/05 BMW AG

After three incorrect code entries, or three attempts to start the engine without a code entry, the alarm will sound for 30 seconds on vehicles fitted with an alarm system.

Deactivating the alarm in an emergency:

If you have forgotten the code, proceed as follows:

1. Disconnect the battery, wait approx. 2 minutes, then reconnect it. Note that on vehicles with an alarm system, the alarm will sound
2. Set the ignition key to position 1: the time display will count down for the next ten minutes
3. After ten minutes, start the engine.

▷ If the code becomes available again in the meantime, it can be entered during the waiting period after pressing the CODE button.◀

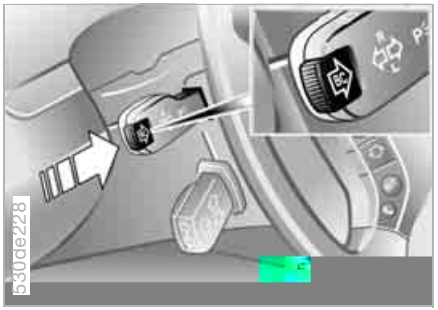

Remote control

The computer button on the turn signal lever can be used to select the items of computer information to be displayed.

To do this, press:

▷ the button on the lever until PROG shows on the display
▷ the MID buttons in the order in which you wish the information to be displayed.
Each time an entry is stored, the program number appears on the display.

To terminate the selection procedure:

Press the right side of the button.

To have all the available information displayed, press
▷ the button on the lever until PROG shows on the display
▷ the SET button.

To obtain individual items of information, briefly press the button as often as necessary.

PDC Park Distance Control*

The concept

PDC provides extra safety and convenience during parking maneuvers. Signal tones indicate the current distance to an object behind or in front of your vehicle. To do this, four ultrasonic sensors in the front and rear bumpers each measure the distance to the nearest object. The detection range of the front sensors and the two sensors located at the ends of the rear bumper is approx. 2 ft/60 cm, while the rear center sensors can detect objects up to a distance of approx. 5 ft/1.50 m.

PDC is a parking aid that can indicate objects when they are approached slowly, as is usually the case when parking. Avoid approaching objects too quickly; otherwise the physical circumstances may cause the system to issue the warning too late.◀

Automatic operation

When the engine is running or the ignition is switched on, the PDC system starts to operate automatically approx. one second after you shift into reverse or move the selector lever into the R position. Wait this short period before backing up.

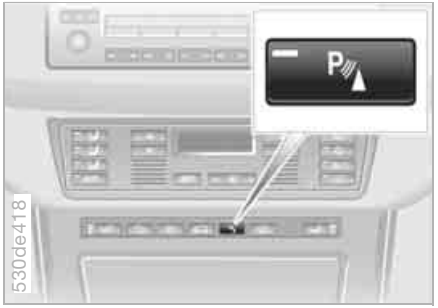

Manual activation

Press the button; the LED lights up.

Manual deactivation

Press the button again; the LED goes out.

Automatic deactivation

After driving a distance of more than approx. 95 ft/30 m or exceeding a speed of approx. 20 mph/30 km/h, the system switches off and the LED goes out. You may switch the system on again manually as needed.

Online Edition for Part No. 01 41 0 159 867 - © 07/05 BMW AG

Signal tones

The distance from an object is indicated in front with a higher intermittent tone, and at the rear with a lower intermittent tone. As the distance between vehicle and object decreases, the intervals between the tones become shorter. The signal tone becomes continuous once the distance to the nearest object falls to below roughly 1 ft/30 cm.

The warning signal is canceled after approx. 3 seconds if you are moving parallel to a wall.

Malfunctions

The LED flashes and a short steady signal tone is sounded

▷ if you activate PDC with the button
▷ when you select reverse for the first time after switching on the ignition
▷ if a malfunction occurs while the PDC system is active.

Switch the system off and have the cause of the malfunction corrected by your BMW Sports Activity Vehicle center.

System limits

Even with PDC, final responsibility for estimating the distance between the vehicle and any obstructions always remains with the driver. Even when sensors are involved, there is a blind spot in which objects cannot be detected. This applies especially in those cases where the system approaches the physical constraints of ultrasonic measurement, as occurs with tow bars and trailer couplings, and in the vicinity of thin or wedge-shaped objects. It is also possible that low objects already displayed, such as curb edges, may come into the blind spot of the sensors before a continuous signal sounds or that higher, protruding objects, such as ledges, will not be detected.
Loud sources of sound, inside and outside the vehicle, could drown out the PDC signal tone.◀

Keep the sensors clean and free of ice or snow in order to ensure that they will continue to operate effectively.
When using high-pressure washers, do not spray sensors for long periods and keep the sprayer at least 4 in/10 cm away from the sensors.◀

The concept

The ABS Antilock Brake System prevents the wheel brakes from locking during braking. Safe steering response is maintained even during full braking. This increases active safety.

The ABS is operational every time you start the engine. Safe braking, refer to page 140.

EBV Electronic brake-force distribution

EBV controls the brake system's application pressure at the rear wheels to ensure stable deceleration.

DBC Dynamic Brake Control

When the brake pedal is depressed rapidly, this system automatically generates a maximum boost of braking force and thus aids in keeping braking distances as short as possible during full braking. This system exploits all of the benefits provided by ABS.

Do not reduce the pressure on the brake pedal for the duration of the brake application. DBC is deactivated when you release the brake pedal.

Malfunctions

Please be absolutely sure to follow instructions regarding possible combinations of indicator lights on page 20.

DSC Dynamic Stability Control

The concept

DSC prevents the drive wheels from slipping when starting off and accelerating. DSC also identifies unstable driving conditions, such as a loss of traction at the rear of the vehicle or sliding of the vehicle in its front wheels. Under these circumstances, DSC helps the vehicle maintain a safe course within the physical limits by reducing the engine output and by applying the brakes in the individual wheels.

The DSC is operational every time you start the engine.

The laws of physics cannot be repealed, even with DSC. An appropriate driving style always remains the responsibility of the driver. So please do not further limit the additional safety margin by taking unnecessary risks.◀

Indicator lamp

The indicator lamp in the instrument cluster goes out shortly after the engine is started.

The indicator lamp flashes:
DSC is active and is regulating drive and braking force.

The indicator lamp stays lit:
DSC has been switched off using the button and the stabilizing interventions are no longer available.

Online Edition for Part No. 01 41 0 159 867 - © 07/05 BMW AG

Switching DSC off

Press the button; the indicator lamp comes on and stays on.

Stabilizing interventions of the chassis control system DSC are no longer available. However, the braking interventions that simulate the function of the differential lock continue to be active.

In the following exceptional circumstances, it may be effective to switch off the DSC for a short period:

- ▷ When rocking a stuck vehicle free and when starting off in deep snow or on loose road surfaces
- ▷ On sandy road surfaces
- ▷ On poor surfaces with deep ruts
- ▷ If the wheels churn on muddy surfaces
- ▷ When driving with snow chains.

▷ When the DSC system is switched off, braking maneuvers may subject the brakes to additional loads. Automatic limitation of braking action may briefly occur in order to limit brake temperatures.
To maintain vehicle stability, always drive with the system switched on when possible.◀

Switching DSC on

Press the button a second time – the indicator lamp goes out. DSC is now activated.

Malfunctions

Please be sure to read the information on the DSC Dynamic Stability Control/ xDrive warning lamp on page 22 and on the possible lamp combinations that can light up on page 20.

xDrive

xDrive is the 4-wheel drive system of your X5. The combined effects of xDrive and DSC further optimize the traction and dynamic driving characteristics. The 4-wheel drive system xDrive variably distributes the drive torque to the front and rear axle depending on the driving situation and prevailing road conditions.

Malfunctions

Please be sure to read the information on the DSC Dynamic Stability Control/ xDrive warning lamp on page 22 and on the possible lamp combinations that can light up on page 20.

HDC Hill Descent Control

The concept

HDC is a system for driving downhill in steep terrain. This system reduces vehicle speed on steep downhill gradients, thus allowing you to maintain even better control of your BMW under these conditions.
The vehicle moves at slightly more than walking speed without active intervention from the driver.

HDC is available for activation at vehicle speeds below approx. 20 mph/ 35 km/h. When driving down steep hills with a speed below approx. 20 mph/ 35 km/h, the vehicle reduces speed automatically down to slightly more than walking speed, approx. 5 mph/ 8 km/h, and then maintains this speed at a constant.

You can use the accelerator or brakes to vary this automatically controlled speed within a range extending from approx. 3 mph/5 km/h to 15 mph/ 25 km/h.
You can specify a target speed within the same range by using the +/– buttons of the cruise control.

HDC is automatically deactivated once vehicle speed again exceeds approx. 35 mph/60 km/h.

Activating system

Press the button; the LED lights up.

The LED flashes when the brakes are applied automatically.

Deactivating system

Press the button again; the LED goes out.

HDC is deactivated automatically above a road speed of approx. 35 mph/ 60 km/h and when the ignition is switched off.

Online Edition for Part No. 01 41 0 159 867 - © 07/05 BMW AG

HDC Hill Descent Control

Using HDC

With manual transmission:
Use HDC in first gear and in Reverse since the engine's braking action is diminished in the higher gears.

With automatic transmission:
You can use HDC in every drive position.

In case of a malfunction

If the LED in the button goes out during HDC operation or does not light up when the HDC is activated:
HDC is temporarily unavailable due to excessive brake temperature.

Self-leveling suspension*

The warning lamp for the self-leveling suspension comes on, or the message SELFLEVEL SUSP.INACT appears in the Check Control: there is a malfunction in the self-leveling suspension.

Stop and inspect the vehicle. If the rear of the vehicle is visibly lower than the front, possibly accompanied by a tilt noticeable when you compare the left rear with the right rear, please respond by immediately proceeding to the nearest BMW Sports Activity Vehicle center. Drive with appropriate caution in the meantime. The vehicle has reduced ground clearance and driving comfort may be noticeably reduced.

Even when the position of the vehicle is normal, have the system checked as soon as possible when a malfunction is indicated.

Online Edition for Part No. 01 41 0 159 867 - © 07/05 BMW AG

2-axle self-leveling suspension*

The concept

Your vehicle is equipped with 2-axle self-leveling suspension acting on both the front and rear suspension. This system combines automatic self-leveling, which compensates for variations in front-to-rear load-distribution patterns, with a selection feature allowing drivers to choose from among several ride-height options.

You may choose from among the following ride heights:

▷ Normal
The standard setting is intended for most operating conditions, including trailer towing

▷ Off-Road
Increased level for more ground clearance

▷ Access
Lowers vehicle for more convenient cargo handling or easier passenger entries and exits.

Changes in ride height are initiated either manually, using the control button, refer to page 97, or automatically in response to specific speeds. When the ride height is selected manually, the driver has the additional option of revising the ride-height selection by entering a new command during the adjustment process.

When the vehicle is stationary, the system executes ride-height changes in both directions – up and down – whenever the doors are closed. The tailgate/liftgate may be open. The system raises the vehicle only when the engine is running.

The system's automatic self-leveling feature automatically compensates for variations in the vehicle's load.

The ground clearance of the vehicle 6.5-9 in/16.5-22 cm, depending on the level selected.

▷ Frequent changes in ride height initiated at short intervals can overheat the compressor, causing the system to briefly suspend active operation.◀

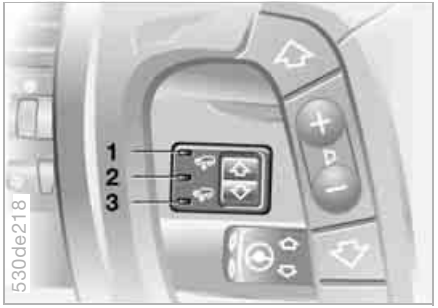

Self-leveling suspension display

1 Off-Road

2 Standard

3 Access

The LEDs not only show the current ride height, but also indicate changes:

▷ LED on: indicates the vehicle's current ride height

▷ Ride-height LED flashes while the LED for the earlier level remains on: the ride height is being adjusted to a new level, either automatically or in response to driver input at the button.

When the suspension reaches the new ride height the flashing LED reverts to continuous operation, and the LED for the earlier level goes out.

Online Edition for Part No. 01 41 0 159 867 - © 07/05 BMW AG

▷ LED for current ride height flashes for roughly 3 seconds when you press the button: change in ride height is not possible.

Raising

Available only when the engine is running.

From Standard to Off-Road:

Press button 1 while traveling at a speed of less than approx. 30 mph/ 50 km/h.

From Access to Standard:

▷ Press button 1 or
▷ automatically once the vehicle exceeds a speed of approx. 20 mph/ 35 km/h.

Lowering

Available with ignition key in position 2.

From Standard to Access:

1. Press button 2 while traveling at less than approx. 50 mph/80 km/h. The system enters its preselection mode. The preselection mode is canceled
   ▷ by pressing button 1
   ▷ automatically once the vehicle exceeds a speed of approx. 50 mph/80 km/h or approx. 60 seconds after button 2 is pressed
2. Reduce speed to below approx. 15 mph/25 km/h within approx. 60 seconds after pressing button 2.

▷ When you press button 2 at speeds below approx. 15 mph/ 25 km/h the system automatically lowers the vehicle to the Access level.◀

From Off-Road to Standard:

▷ Press button 2 or
▷ automatically once the vehicle exceeds a speed of approx. 30 mph/ 50 km/h.

Online Edition for Part No. 01 41 0 159 867 - © 07/05 BMW AG

Brake force display

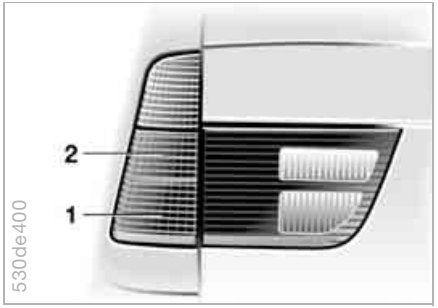

The brake lamps light up in two stages, depending on how forcefully you apply the brakes.

▷ Normal braking:
The brake lamp 1 and the center brake lamp light up

▷ Heavy braking:
The brake lamps 1 and 2 light up together with the center brake lamp.

Flat Tire Monitor

The concept

The Flat Tire Monitor keeps track of the inflation pressures in the four fitted tires as you drive. The system provides an alert whenever the inflation pressure in one tire drops significantly in relation to the pressure in another tire.

The check of the tire inflation pressure is based on monitoring the relative speeds of the wheels. A flat is detected and reported on the basis of a deviation in certain speed ratios.

Functional requirement

To ensure reliable operation, the system should have been initialized with the correct tire inflation pressure.

System limits

⚠ The Flat Tire Monitor cannot indicate sudden severe tire damage caused by outside factors and does not detect a natural, even pressure drop in all four tires.◀

In the following situations, the system could be delayed or malfunction:

▷ When driving on snow-covered or slippery road surfaces

▷ In the case of performance-oriented driving: slip in the drive wheels, high lateral acceleration

▷ False alarms and undetected loss of pressure may occur when you are driving with snow chains fitted.

Online Edition for Part No. 01 41 0 159 867 - © 07/05 BMW AG

Initializing system

Perform the initialization immediately every time you correct the inflation pressure, change a tire or change a wheel or all wheels. The vehicle must be driven during initialization.◀

1. Start the engine, but do not begin to drive immediately.
2. Press the button until the yellow indicator lamp in the instrument cluster lights up for a few seconds.
3. Begin driving.

It takes a few minutes of driving before the Flat Tire Monitor can detect and report a flat tire.

When driving with snow chains, do not initialize the system.◀

Indication of a flat tire

The warning lamp lights up yellow. There is a flat tire or extensive inflation pressure loss.

1. Reduce speed and stop the vehicle carefully. Avoid sudden braking and steering maneuvers
2. Identify damaged tire

   If identification is not possible, contact your BMW Sports Activity Vehicle center.◀
3. Replace the damaged wheel, refer to Changing a wheel on page 165.

Parking lamps/side marker lamps

The front, rear and side vehicle lighting is switched on. You can use the parking lamps for parking. For lighting on one side for parking as an additional feature, refer to page 101.

Low beams

When the ignition is switched off and the low beams are on, only the parking lamps/side marker lamps remain on.

Pathway lighting:
When you activate the headlamp flasher after parking the vehicle and switching off the lamps, the low beams will come on for a brief period. You may also have this function deactivated if you wish.◀

Lights on warning

Whenever you open the driver's door, after having turned the ignition key to position 0, an acoustic signal will sound for a few seconds to remind you that the lamps have not been switched off.

Alphanumeric Check Control*:
The reminder is given through the Check Control.

Daytime driving lamps*

The headlamps are automatically switched on for daytime driving at ignition key position 2.

Automatic headlamp control*

When you set the switch to this position, the system activates and switches on and off the low beams in response to changes in ambient light conditions, for instance, in tunnels, at dawn and dusk, and in rain and snow.

The low beams remain switched on regardless of the ambient light when you switch on the front fog lamps.◀

Automatic headlamp control cannot serve as a substitute for the driver's judgment in determining when the vehicle lamps should be switched on. For example, the system cannot detect fog. To avoid safety risks, you should always switch on the lamps manually under these conditions.◀

You can have the sensitivity of the headlamp control system adjusted on your vehicle.◀

Online Edition for Part No. 01 41 0 159 867 - © 07/05 BMW AG

Adaptive Head Light*

The concept

Adaptive Head Light is a variable headlamp control system that enables better illumination of the road surface. Depending on the steering angle and other assumptions, the light from the headlamp follows the course of the road.

Activating Adaptive Head Light

In ignition key position 2, turn the light switch to the position 'Automatic headlamp control', refer to page 100.

To avoid blinding oncoming traffic, the Adaptive Head Light

▷ is not active when driving in reverse
▷ is active only when pointing toward the passenger side.

Malfunctions

The LED next to the symbol for automatic headlamp control flashes. Adaptive Head Light is faulty or has failed. Have the system checked as soon as possible.

High beams/roadside parking lamps

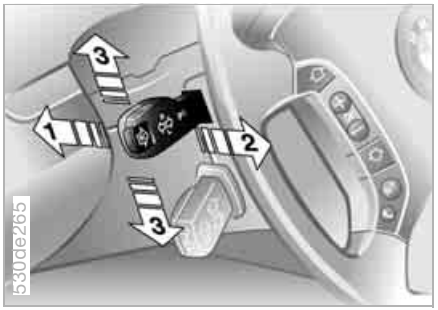

1 High beams
2 Headlamp flasher
3 Roadside parking lamps

Roadside parking lamps, left or right*

As an additional feature, you can illuminate your vehicle on either side for parking, if you wish:

With the ignition key in position 0, engage the lever in the appropriate turn signal position.

The roadside parking lamps drain the battery. Avoid use for extended periods of time, otherwise, it will no longer be possible to start the engine.◀

Front fog lamps

Briefly press the button to switch on/off.

The parking lamps or low beams must be switched on for the fog lamps to operate. A green indicator lamp appears in the instrument cluster to indicate that the front fog lamps are on.

If the high beams are switched on, the front fog lamps go out.

If the automatic headlamp control is activated, the low beams will automatically be switched on when the front fog lamps are switched on.◀

Instrument lighting

Turn the knurled wheel to adjust the illumination intensity.

Online Edition for Part No. 01 41 0 159 867 - © 07/05 BMW AG

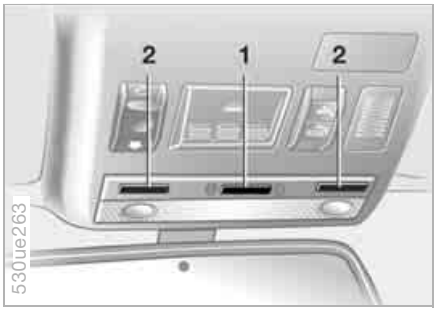

The interior lamps operate automatically.

Switching interior lamps on and off manually

Briefly press button 1.

If you want the interior lamps to remain off all the time, press and hold the button for approx. 3 seconds.

Briefly press the button to revert to normal operation.

The button for the interior lamps in the rear passenger area only switches these lamps on and off.

Reading lamps*

Reading lamps are located at the front and in the rear next to the dome light. They can be switched on and off with the respective buttons 2 located next to them.

Footwell and cargo area lamps

The lamps are controlled in the same manner as the front interior lamps.

Courtesy lighting*

This lighting system in the two exterior mirrors illuminates the ground in the area near the two front doors. It is also controlled in the same manner as the front interior lamps, but it does not function while the vehicle is moving.

▷ In order to prevent battery discharge, all of the lamps in the vehicle are switched off automatically approx. 15 minutes after the ignition key is turned to position 0.◀

Online Edition for Part No. 01 41 0 159 867 - © 07/05 BMW AG

Air conditioner

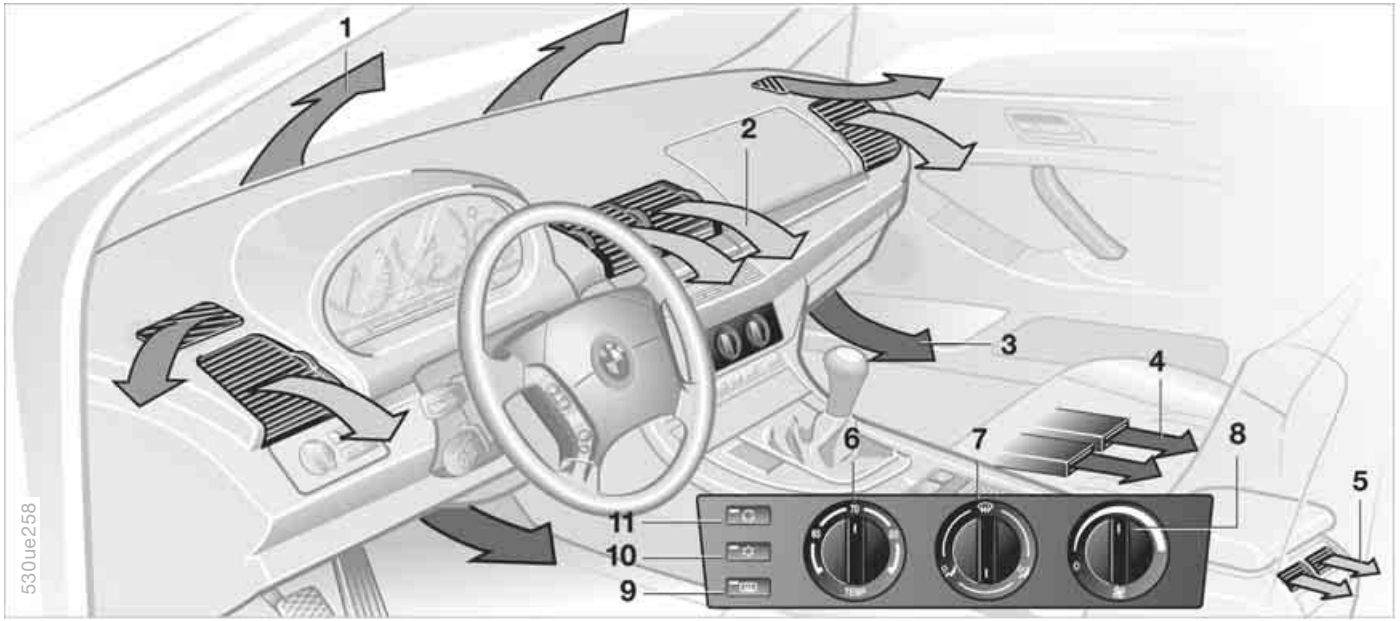

1 Airflow directed toward the windshield and side windows
2 Airflow for the upper body 106
3 Front footwell ventilation
4 Rear footwell ventilation
5 Airflow for the upper body in the rear seat 106
6 Temperature 105
7 Air distribution 105
8 Air supply 105
9 Rear window defroster 105
10 Air conditioning 105
11 Recirculated-air mode 105

Online Edition for Part No. 01 41 0 159 867 - © 07/05 BMW AG

Temperature

The graduations on the dial provide general reference values for the interior temperature. 70 °F /22 °C is recommended as a comfortable setting. After driving begins, the selected temperature is reached as quickly as possible and kept constant by the control system.

Air distribution

You can direct air to flow onto the windows, toward the upper body and into the footwell. All intermediate settings are possible. In the setting, there is a low flow of air onto the windows to keep them free of condensation.

Air supply

You can adjust the air supply through an infinitely-variable range. The heating and ventilation become more and more effective as the air supply settings are increased. In the 0 setting, the blower and climate control are switched off and the outside air supply is blocked.

Rear window defroster

When the rear window defroster is activated, the LED lights up. The rear window defroster switches off automatically.

Air conditioning

The air is cooled and dehumidified and – depending on the temperature setting – warmed again. Depending on the weather, the windshield may fog over briefly when the engine is started. You can reduce condensation forming on the windows by switching on the air conditioning.

During air conditioning, condensation forms, which then exits under the vehicle. Traces of water on the ground are therefore normal.◀

Recirculated-air mode

You can respond to unpleasant odors outside the vehicle by temporarily switching off the outside air supply. The system then recirculates the air currently within the vehicle.

You can also use the button on the steering wheel to switch over to the recirculated-air mode, refer to page 23.

If the windows fog over in the recirculated-air mode, switch the recirculated-air mode off and increase the air supply as required.◀

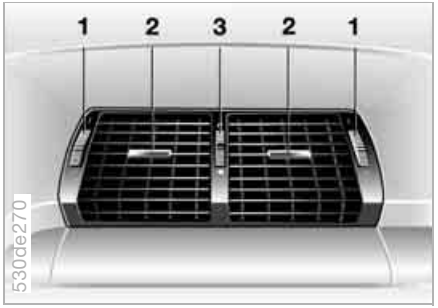

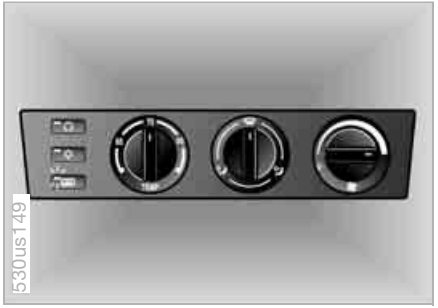

Ventilation

The air vents for the upper body region are adjustable:

1 Knurled wheels for opening and closing the vent outlets through an infinitely-variable range

2 Levers for adjusting airflow direction

3 Use this knurled wheel to adjust the temperature of the incoming air:
▷ Turn toward blue: colder
▷ Turn toward red: warmer.

Rear ventilation*

1 Knurled wheel for opening and closing the vent outlets through an infinitely-variable range

2 Levers for adjusting airflow direction

The air that flows out here is somewhat cooler than the air delivered to the footwell.

Microfilter

The microfilter removes dust and pollen from the incoming air and in the recirculated-air mode. It is replaced by your BMW Sports Activity Vehicle center during regular maintenance. A substantial reduction in air supply indicates that the filter must be replaced before normal maintenance.

Defrosting windows and removing condensation

1. You can specify an interior temperature that is comfortable for you with the rotary temperature dial. A good starting point is 70 °F/22 °C
2. Set the air distribution rotary dial to
3. Set the blower/air supply rotary dial completely to the right
4. Close the vent outlets in the rear seating area
5. Switch on the rear window defroster to defrost the rear window.

Online Edition for Part No. 01 41 0 159 867 - © 07/05 BMW AG

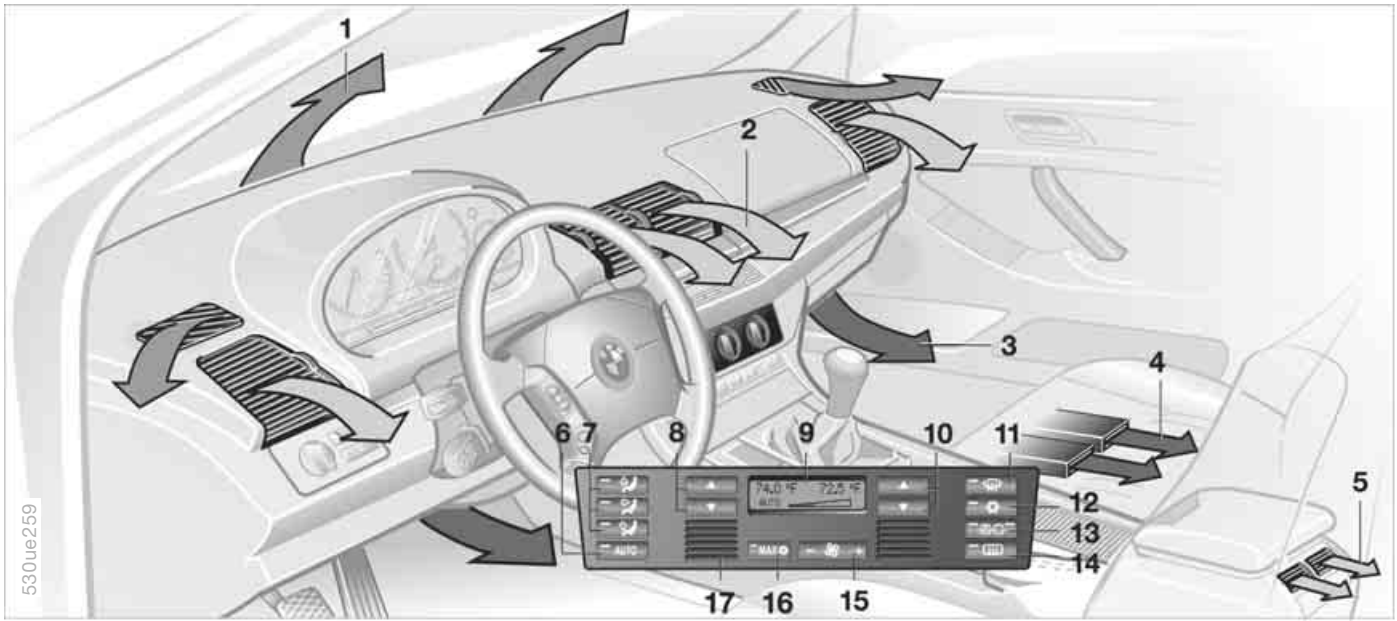

1 Airflow directed toward the windshield and side windows
2 Airflow for the upper body 111
3 Airflow for the footwell
4 Rear footwell ventilation
5 Airflow for the upper body in the rear seat 111
6 Automatic air distribution and supply 109
7 Individual air distribution 109
8 Temperature, left side of passenger compartment 109
9 Display for temperature and air supply 109

Automatic climate control*

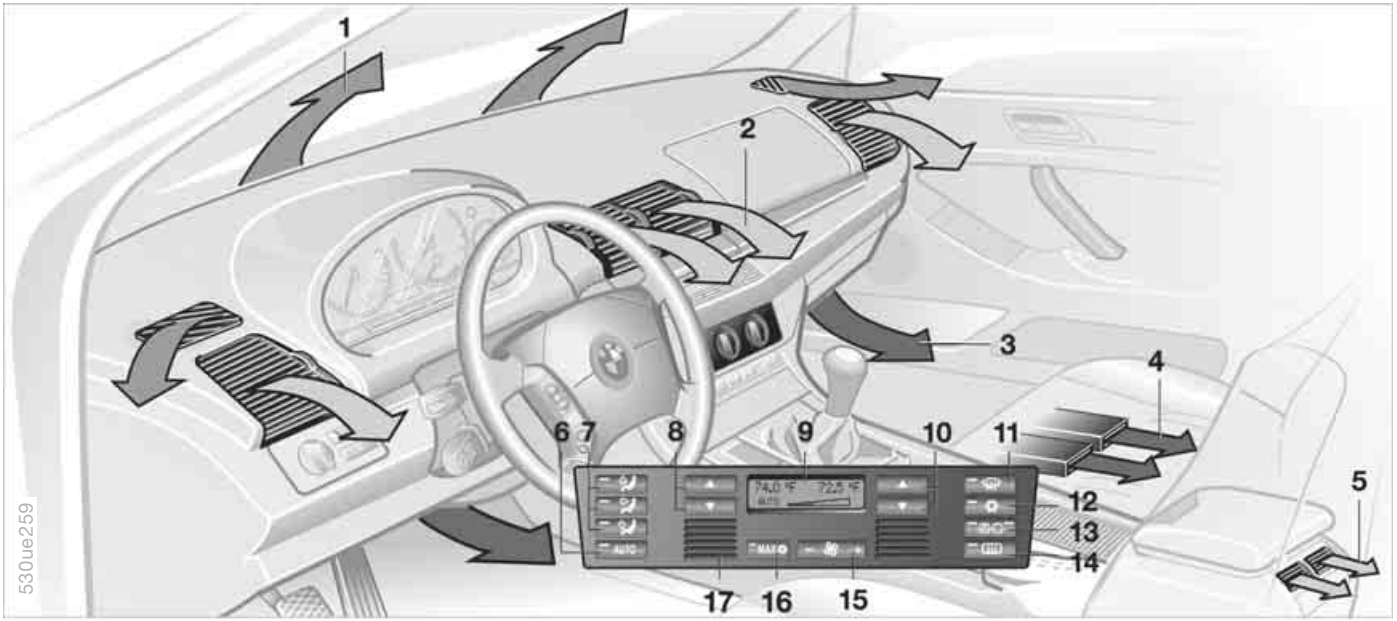

10 Temperature, right side of passenger compartment 109

11 Defrosting windows and removing condensation 109

12 Air conditioning 110

13 AUC Automatic recirculated-air control 110

14 Rear window defroster 110

15 Air supply 109

16 Maximum cooling 110 or residual heat utilization 110

17 Air grill for interior temperature sensor – please keep clear and unobstructed

Online Edition for Part No. 01 41 0 159 867 - © 07/05 BMW AG

Tips for pleasant driving

For nearly all conditions, AUTO program 6 offers the optimal air distribution and airflow volume. Select the interior temperature that is comfortable for you.

Detailed setting options are described for you in the following section.

Your BMW Sports Activity Vehicle center can program the settings of your vehicle in such a manner that, when you unlock the vehicle with your individualized key, your own personalized setting for the automatic climate control is initiated.◀

Automatic air distribution

AUTO The AUTO program adjusts the airflow and distribution patterns for you while also using your preselected temperature setting as the basis for adjusting the interior climate to adapt to external influences: summer, winter.

Individual air distribution

You can cancel the AUTO program by selecting specific air distribution patterns for your personal comfort, the automatic air supply remains in operation. You can direct air to flow onto the windows, toward the upper body, and into the footwell. You can reactivate the automatic air distribution mode by pressing the AUTO button.

Temperature

Set the desired temperature individually on the driver's and front passenger side.

The automatic climate control adjusts this temperature as quickly as possible at any time of year, if necessary with the maximum cooling or heating capacity, and then keeps it constant.

When switching between different temperature settings in rapid succession, the automatic climate control does not have sufficient time to adjust the set temperature.◀

To change the units of measure in the display °F/°C, refer to page 73 or 80.

Air supply

In the AUTO program, the air supply is automatically controlled, and AUTO appears on the display 9, refer to overview on page 107. You can vary the air supply by pressing the left or right half of the button. When your setting is displayed as bars, the automatic air supply is switched off. Automatic air distribution maintains its setting. You can reactivate the automatic air supply by pressing the AUTO button.

When you press the left side of the button during operation at minimum blower speed, all displays are canceled: the blower, heating and air conditioner are switched off. The outside air supply is closed. You can switch the system back on by pressing any button of the automatic climate control, except the MAX button 16.

Defrosting windows and removing condensation

Quickly remove ice and condensation from the windshield and front side windows.

Air conditioning

The air is cooled and dehumidified and – depending on the temperature setting – warmed again. Depending on the weather, the windshield may fog over briefly when the engine is started. You can reduce condensation forming on the windows by switching on the air conditioning.

During air conditioning, condensation forms, which then exits under the vehicle. That traces of water on the ground are therefore normal.◀

Maximum cooling

Maximally cooled air is obtained as quickly as possible from an outside temperature above 32 °F / 0 °C and with the engine running.

The automatic climate control changes over to the lowest temperature and switches into the recirculated-air mode. The maximum air quantity only flows out of the vents for the upper body. Therefore, open these vents for maximum cooling.

AUC Automatic recirculated-air control

You can respond to unpleasant odors or pollutants in the immediate environment by shutting off the supply of outside air. The system then recirculates the air currently within the vehicle. In AUC operating mode, a sensor detects pollutants in the external air and controls the shut-off automatically.

Press the button repeatedly to run through the following control sequence

- ▷ LEDs off: outside air supply operational
- ▷ Left LED on, AUC mode: the system detects pollutants in the outside air and blocks the flow of air when necessary. The system then recirculates the air currently within the vehicle. Depending on the air quality, the automatic system then switches back and forth between outside air supply and recirculation of the air within the vehicle
- ▷ Right LED on: the outside air supply into the vehicle is shut off continuously. The system then recirculates the air currently within the vehicle.

You can also use the button on the steering wheel to switch between Off and recirculated-air mode or between AUC and recirculated-air mode, refer to page 23.

If the windows fog over in the recirculated-air mode, switch the recirculated-air mode off and increase the air supply as required.◀

Rear window defroster

When the rear window defroster is activated, the LED lights up. The rear window defroster switches off automatically after a while.

Residual heat

Press the button when the motor is switched off, but warm.

The heat stored in the engine is utilized for heating the interior when the engine has been switched off – while waiting at a railroad crossing, for instance.

This function may be activated when the outside temperature is below approx. 59 °F / 15 °C, the engine is at operating temperature, and the battery

Online Edition for Part No. 01 41 0 159 867 - © 07/05 BMW AG

is adequately charged. The LED on the button will light up when all conditions have been met.

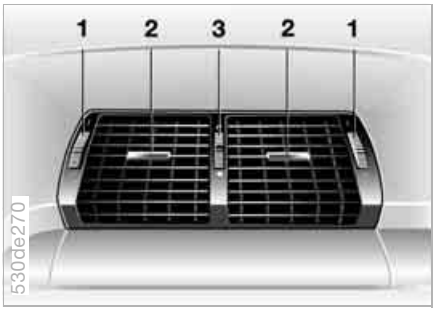

Ventilation

The air vents for the upper body region are adjustable:

1 Knurled wheels for opening and closing the vent outlets through an infinitely-variable range

2 Selector levers for airflow direction

3 Use this knurled wheel to control the temperature of the airflow:
▷ Turn toward blue: colder
▷ Turn toward red: warmer.

Rear climate control*

1 Air supply

2 Temperature

3 Adjusting the direction of the airflow

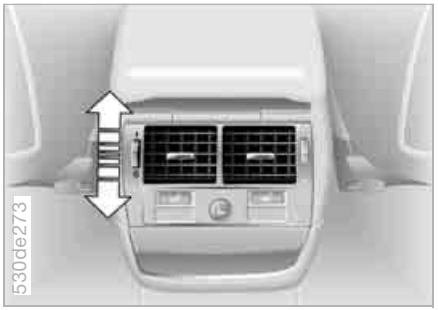

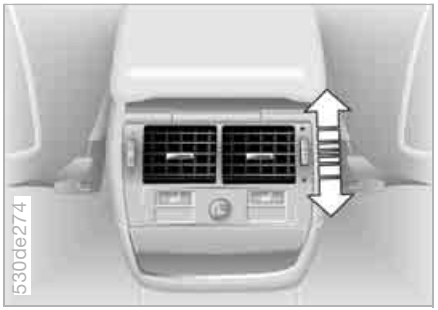

Air supply

0 Blower off

I Maximum blower speed

You can adjust the air supply for the vent outlets through an infinitely-variable range between the 0 and I settings.

In the 0 setting, the blower is switched off and the supply of air through the vent outlets is blocked.

Individual adjustments on the front-seat control elements influence the air supply for rear passenger area climate control.

Temperature

Passengers in the rear seating area can adjust their own temperature for the vent outlets:

▷ Turn toward blue: colder
▷ Turn toward red: warmer.

When you start the vehicle, this system ensures that the selected temperature is achieved as quickly as possible.
It then maintains this temperature, regardless of the season.

▷ It is only possible to adjust the temperature when the blower is switched on, not in the 0 setting.◀

Microfilter/activated-charcoal filter

The microfilter removes dust and pollen from the incoming air. The activated-charcoal filter provides additional protection by filtering gaseous pollutants from the outside air. Your BMW Sports Activity Vehicle center replaces this combined filter as a standard part of your scheduled maintenance. A substantial reduction in air supply indicates that the filter must be replaced before normal maintenance.

Online Edition for Part No. 01 41 0 159 867 - © 07/05 BMW AG

Roller sun blinds*

Roller sun blinds for rear side windows*

Use the strap to pull out the blinds, then hook them in the attachment provided.

With roller sun blinds attached, do not open the windows during travel. The blinds may otherwise be damaged by the wind.◀

Parked car ventilation*

You can use this system to ventilate the interior and lower its temperature, using the blower of the parked car ventilation or of the automatic climate control.

The parked car ventilation is operated via the MID Multi-Information Display, refer to page 84 or via the onboard computer, refer to the separate Owner's Manual.

You can set two different times for the system to start; it will remain active for 30 minutes. You can also switch it on and off directly. Since the system uses a substantial amount of electrical current, you should refrain from switching it on twice in succession without allowing the battery to be recharged in normal operation between uses.

When a preselected activation time is set, the parked car ventilation is operational at outside temperatures above approx. 60 °F/16 °C, or by direct switch activation.

The air enters the passenger compartment through the vent outlets in the instrument cluster, which can be adjusted for both direction and airflow. The vent outlets must therefore be open for the system to operate.

Online Edition for Part No. 01 41 0 159 867 - © 07/05 BMW AG

Integrated universal remote control*

The concept

The integrated universal remote control can replace as many as three hand-held transmitters for various remote-controlled accessories, such as door openers and house alarm systems. The integrated universal remote control recognizes and learns the transmitted signal of each of the original hand-held transmitters.

The signal of an original hand-held transmitter can be programmed on one of the three memory buttons 1. Following that, each of the devices can be actuated with the appropriately-programmed memory button 1. The LED 2 flashes to confirm transmission of the signal.

Should you sell your vehicle one day, be sure to delete the stored programs beforehand for your safety, refer to page 116.

To prevent possible damage or injury, before programming or using the integrated universal remote control, always inspect the immediate area to make certain that no people, animals or objects are within the travel range of the device. Also, comply with the safety precautions of the original hand-held transmitter.◀

To Canadian residents:
During programming, your hand-held transmitter may automatically stop transmitting after two seconds, which may not be long enough to program the integrated universal remote control. If you are programming from one of these hand-held transmitters, the Universal Transmitter's light may begin to flash in a series of double-blinks. If this occurs, continue to hold the button of the integrated universal remote control while you reactivate your hand-held transmitter. You may have to repeat this function several times while programming.◀

Checking compatibility

If you see this symbol on the packaging or in the manual supplied with the original hand-held transmitter, it is safe to assume that it is compatible with the integrated universal remote control.

A list of compatible hand transmitters is available via fax polling by calling +49 (0)6838 907283 3333. For details, please call the toll-free HomeLink Hotline at +49 (0)6838 907 277 or 0800 0466 35465 in Germany.

HomeLink is a registered trademark of Johnson Controls.

Online Edition for Part No. 01 41 0 159 867 - © 07/05 BMW AG

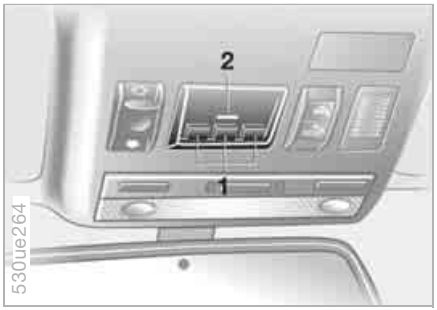

Programming

1 Memory buttons

2 LED

Fixed-code hand-held transmitter

1. Switch on the ignition.
2. For initial use: press both outer buttons 1 for approx. 20 seconds until the LED 2 flashes. The three memory buttons 1 are cleared.
3. Hold the original hand-held transmitter at a distance of approx. 2 to 8 in/ 5 to 20 cm from the memory buttons 1.

   ▷ The required distance between the hand-held transmitter and memory buttons 1 depends on the relevant system of the original hand-held transmitter used.◀
4. Simultaneously press the transmit button on the original hand-held transmitter and the desired memory button 1 of the integrated universal remote control. The LED 2 flashes slowly at first. As soon as the LED 2 flashes rapidly, release both buttons. If the LED 2 does not flash rapidly after approx. 15 seconds, alter the distance.
5. To program other original hand-held transmitters, repeat steps 3 and 4.

The corresponding memory button 1 is now programmed with the signal of the original hand-held transmitter.

You can operate the system when the engine is running or when the ignition is switched on.

▷ If the system cannot be operated after repeated programming, check whether the original hand-held transmitter uses an alternating-code system. To do so, either read the instructions of the original hand-held transmitter or press and hold down the programmed memory button 1 of the integrated universal remote control.

If the LED 2 on the integrated universal remote control flashes quickly for a brief period and then remains lit up for approx. two seconds, this indicates that the original hand-held transmitter is equipped with an alternating code. In the case of an alternating-code system, program the memory buttons 1 as described in the section on alternating-code hand-held transmitters.
If you have additional questions, please consult your BMW Sports Activity Vehicle center or call 1-800-355-3515.
You can also visit our website www.bmwusa.com.◀

Alternating-code hand-held transmitter

To program the integrated universal remote control, consult the Owner's Manuals for the equipment to be set. You will find information there on the possibilities for synchronization.
When programming alternating-code hand-held transmitters, please follow the supplementary instructions below:

▷ Programming will be easier with the aid of a second person.◀

1. Park your vehicle within the range of the remote-controlled device
2. Program the integrated universal remote control as described at the section on fixed-code hand-held transmitters
3. Locate the button on the receiver of the device you want to set up, e.g. on the upper section of the motor
4. Press the button on the receiver of the device you want to set up. After step 4, you have approx. 30 seconds for step 5
5. Press the programmed memory button 1 on the integrated universal remote control three times.

The corresponding memory button 1 is now programmed with the signal of the original hand-held transmitter.

If you have any additional questions, please contact your BMW Sports Activity Vehicle center.◀

Clearing memory buttons

It is not possible to clear memory buttons 1 individually. To clear all three memory buttons 1, proceed as follows:

Press both outer buttons 1 of the integrated universal remote control for approx. 20 seconds, maintaining pressure until the LED 2 starts to flash.

Car phone*

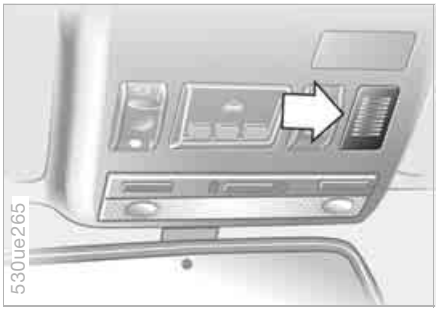

Hands-free system

On vehicles with telephone provisions*, the hands-free microphone is located in the headliner.

For further information on the telephone, refer to the telephone Owner's Manual.

Online Edition for Part No. 01 41 0 159 867 - © 07/05 BMW AG

Interior rearview mirror with digital compass*

1 Adjusting knob for compass zones

2 Display

The display indicates the cardinal and/ or intercardinal direction in which you are currently driving.

Setting compass zones

Depending on where you and your vehicle are located, it is necessary to set the appropriate compass zone, refer to world map with compass zones, page 118.
To set the compass zone, press the adjusting button in the mirror frame for approx. 3-4 seconds with a sharp object, e.g. a ball-point pen or the like. The display indicates the number of the currently set compass zone.

To change the zone setting, press the adjusting button repeatedly until the number of the compass zone that applies to your current position is displayed.

The compass will be operational again after approximately 10 seconds.

For automatic dimming action, refer to Interior and exterior mirrors, automatic dimming feature on page 138.

Calibrating digital compass

In the following situations, the digital compass must be calibrated:

▷ C or CAL appears on the display
▷ The wrong cardinal direction appears on the display
▷ The cardinal direction displayed does not change despite a change in the direction of travel
▷ Not all cardinal directions are displayed.

How to correct this:

1. Make sure that there are no large metal objects or overhead power lines in the vicinity of your vehicle and that you have enough space to drive in a circle
2. Input the currently applicable compass zone
3. Press the adjustment button to bring up C or CAL. Then drive in a complete circle at a maximum speed of 4 mph/7 km/h.
   If the calibration was successful, the displays C or CAL are replaced with the points of the compass.

Interior rearview mirror with digital compass*

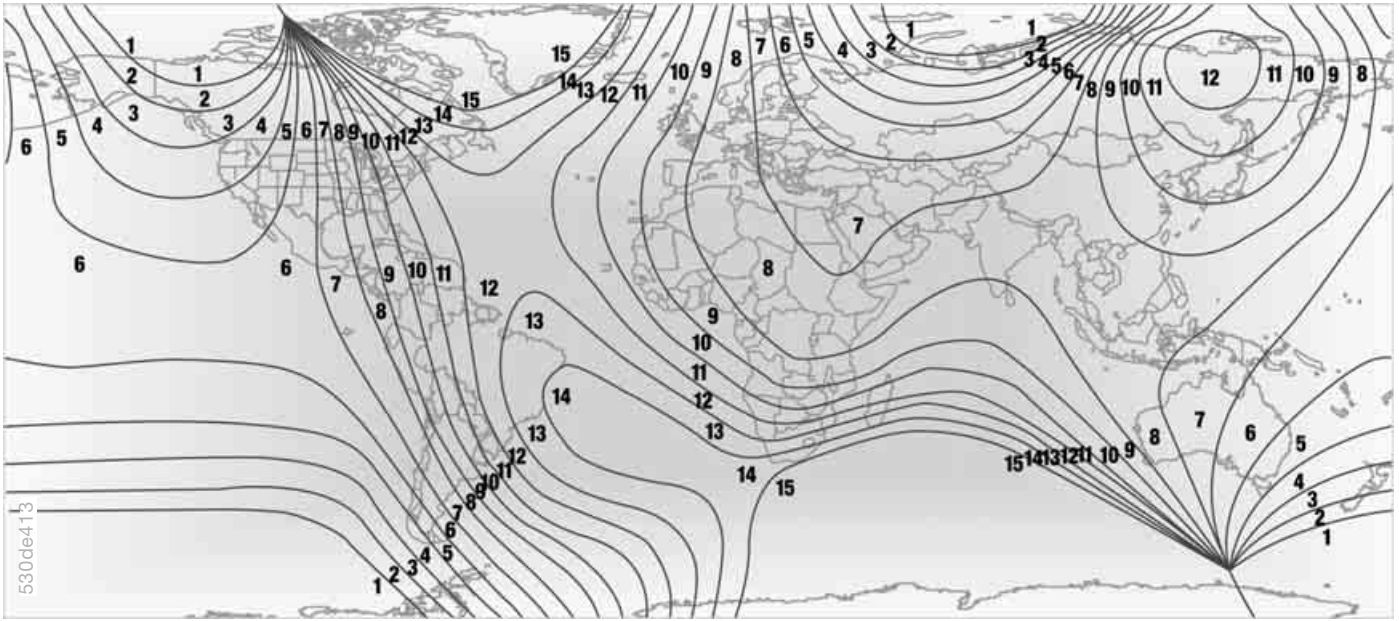

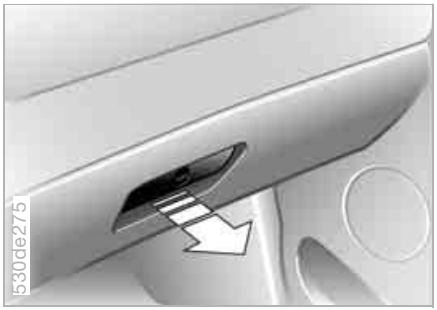

Opening

Pull the handle. The lamp inside the glove compartment comes on.

Closing

Fold the cover up.

To prevent injury in the event of an accident, close the glove compartment immediately after use.◀

Locking

Use one of the master keys. A master key is also required for unlocking.

If you turn over only your spare key for valet parking, for example, refer to page 30, this prevents unauthorized access to the glove compartment.◀

Rechargeable flashlight

Located on the left-hand side of the glove compartment.
Features integral overload-protection, so it can be left in its holder continuously.

To avoid completely discharging and possibly damaging the lamp, always ensure that it is switched off before inserting it into the socket.◀

You will find two storage compartments in the armrest between the front seats.

To open the top compartment:
Press the button, refer to arrow 1.
A built-in phone* is located in this compartment.

To move the armrest or open the lower compartment:
Pull the handle, refer to arrow 2.
This compartment contains a coin tray and a storage compartment* for cassettes or CDs.

You will find additional storage compartments in all of the doors as well as on the backrests of the front seats.

Clothes hooks

When suspending clothing from the hooks, ensure that it will not obstruct the driver's vision. Do not hang heavy objects on the hooks. If you do so, they could cause endanger passengers during braking or evasive maneuvers.◀

Cup holders

Front

Below the sliding cover, refer to illustration.

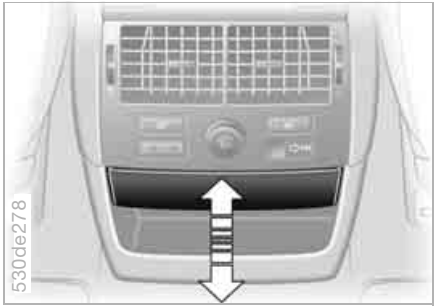

Rear

At the end of the center console under the lighter.

Briefly press to open; push back inward to close.

Do not place glass containers in the cup holders, otherwise there is a danger of injury in an accident.◀

Online Edition for Part No. 01 41 0 159 867 - © 07/05 BMW AG

Ashtray, front

Emptying

Press the edge of the lid, refer to arrow: the ashtray moves up and can be removed.

Cigarette lighter, front

Press the lighter 1 in.
The lighter can be removed as soon as it pops out.

Hold or briefly press the hot cigarette lighter by the knob only. Holding or touching it in other areas could result in burns.
The cigarette lighter remains operational when the ignition key has been removed. For this reason, do not leave unsupervised children in the vehicle.◀

Socket

The cigarette lighter socket can be used to plug in hand flashlights, car vacuum cleaners etc., with power ratings of up to approx. 200 W at 12 V. Be careful not to damage the socket with unsuitable plugs.

Additional sockets are located in the cargo area, refer to page 128, and in the front passenger footwell.

Ashtray, rear

Emptying

Remove the insert tray.

Online Edition for Part No. 01 41 0 159 867 - © 07/05 BMW AG

Cigarette lighter, rear

Press the lighter in.
The lighter can be removed as soon as it pops out.

Hold or briefly press the hot cigarette lighter by the knob only. Holding or touching it in other areas could result in burns.
The cigarette lighter remains operational when the ignition key has been removed. For this reason, do not leave unsupervised children in the vehicle.◀

Online Edition for Part No. 01 41 0 159 867 - © 07/05 BMW AG

Ski bag*

The ski bag allows the safe and clean transport of up to four pairs of standard skis or up to two snowboards.

With the length of the ski bag and the additional space in the cargo area, you can store skis up to 6.8 ft/2.1 m length. Because stowing skis of this maximum length causes the ski bag to narrow, it can only accommodate two pairs of skis with a length of 6.8 ft/2.1 m.

Loading

1. Fold down the center armrest. Loosen the trim from the upper Velcro® fastener and place it onto the armrest
2. Press button 1 downward and swing the cover forward
3. Press button 2: the cover in the cargo area is unlocked. With pull-out cargo floor, refer to page 128: pull out floor, release cover and push back floor again; the floor then conceals the cover
4. Place ski bag between the front seats and load. The zip fastener facilitates access to the stowed items.

Make sure that only clean skis are loaded into the ski bag. Wrap sharp edges so that no damage occurs.

Ski bag*

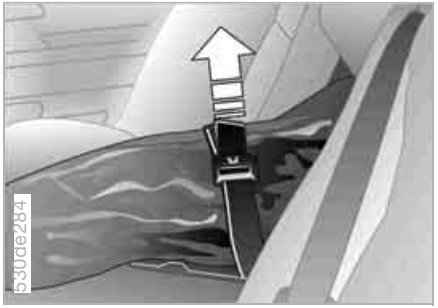

Securing load

After loading, secure the ski bag and its contents. To do so, tighten the retaining belt at the buckle.

Secure the ski bag in this way. If you fail to do so, it could endanger occupants during braking or evasive maneuvers.◀

When stowing the ski bag, proceed in the reverse order from loading.

If the cover in the cargo area is concealed by the pull-out cargo floor, do not fold the larger rear backrest down. If you do so, it will damage the cover.◀

Cargo area

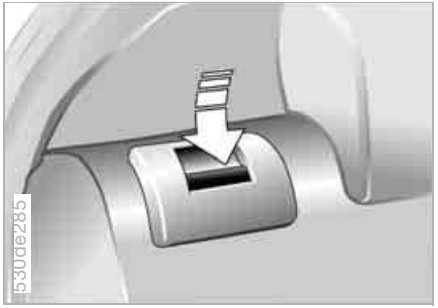

Folding rear backrests down

Reach into the recess and pull forward, refer to arrow.

When you fold back the backrest, be sure that the catch engages securely. The red warning indicator disappears in the recess when the catch is engaged.
The center safety belt can only be pulled out when the larger backrest is locked.◀

Online Edition for Part No. 01 41 0 159 867 - © 07/05 BMW AG

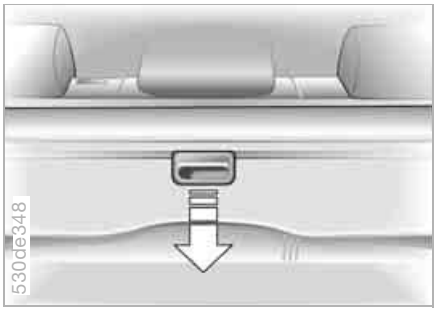

Roll-up cover

Pull out the roll-up cover and hook it into the brackets at the rear.

You can carry light objects such as items of clothing on the roll-up cover.

Do not place heavy or hard objects on the roll-up cover. If you do so, they could pose a danger to vehicle occupants during braking or evasive maneuvers.
Do not allow the roll-up cover to snap back, otherwise it could be damaged.◀

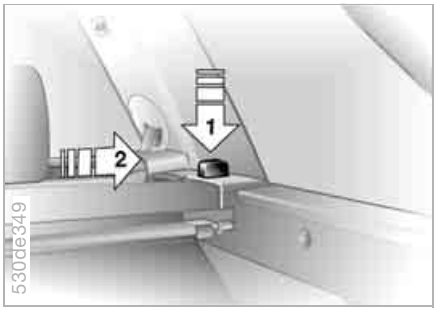

Removing roll-up cover

1. Unlock the case with the button, refer to arrow 1, lift it out of the bracket on the side and hold it in place on the opposite side with the other hand
2. Then push the case toward the side window, refer to arrow 2. This pulls it out of the second bracket and it can be removed.

Installation

Lay the case in the two side brackets and then press down until it engages.

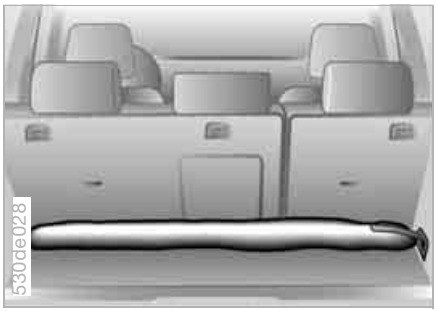

Partition net*

1. Remove the bag with the partition net from the retainer by releasing the hooks from the lashing eyes on both sides

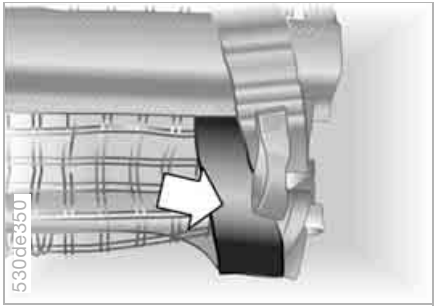

2. Remove the partition net from the bag, unroll it half way and hook it into the retaining strap on both sides, refer to arrow

Note how the partition net is stored in the bag and secured in the vehicle so that you can return everything to its proper place again after use.
If your vehicle has a pull-out cargo floor, follow the instructions on page 128.◀

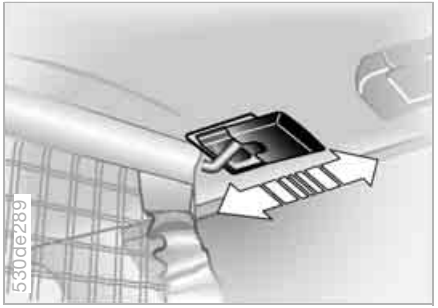

3. Slide back the covers on the retainers for the partition net on both sides of the roof, refer to arrow
4. Insert the curved ends of the partition net rod into the retainers on both sides
5. Now you can slide the covers toward the front again, refer to arrow

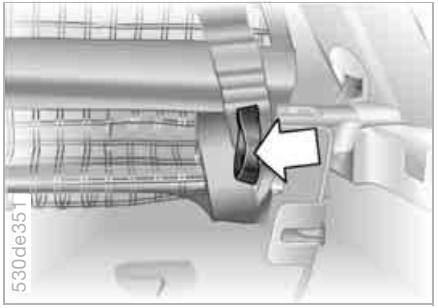

6. Pull the partition net down by the loop on both sides, refer to arrow, and hook the hook into the eye on the backrest

The case with the roll-up cover is not shown in the illustration. With the case removed, it is easier to hook the hooks of the partition net onto the backrest.◀

Online Edition for Part No. 01 41 0 159 867 - © 07/05 BMW AG

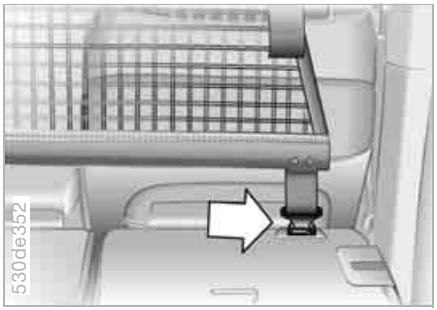

7. When the rear backrests are folded down, you can unhook the partition net from the retaining straps, completely unroll it, insert it in the front retainers on the roof and attach the three hooks into the eyes on the backrests.
   The illustration shows securing at the bottom right as an example.

Side covers

Pull the handle to open the side covers.

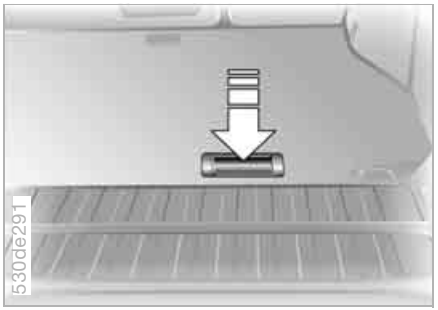

Floor cover

To access the spare wheel.

To open: press the recess in the handle, refer to arrow, and raise the cover with the handle.

Online Edition for Part No. 01 41 0 159 867 - © 07/05 BMW AG

Folding floor cover up

Disengage the loop end on the underside of the floor cover and hook it in with the catch on the upper frame of the liftgate cutout.

Before swinging down the floor cover, reengage the loop end in the retainer on the underside of the floor cover.

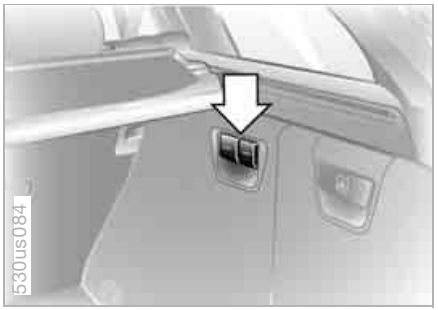

Sockets

When you fold the cover caps up, you have access to additional sockets.

You can use the sockets for flashlights, car vacuum cleaners or other automotive appliances with up to approx. 200 watts at 12 volts. Be careful not to damage the socket with unsuitable plugs.

Also refer to page 121.

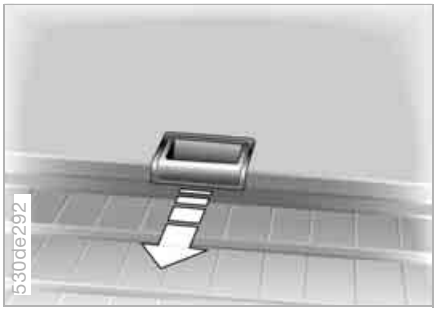

Pull-out cargo floor*

To release, pull the handle recess upward. Then pull the floor out.

Do not drive when the cargo floor is pulled out.
Do not release the cargo floor on steep grades. If you do, it could extend automatically and cause personal injuries. A load which is not properly secured could slide if the floor extends automatically and then drop to the ground as a result of the rapid braking of the cargo floor at the limit stop.◀

When it is extended, you can load the cargo floor:

▷ With up to 990 lbs./450 kg, distributed evenly across the entire surface
▷ With up to 330 lbs./150 kg on the rear edge.

Do not overload the cargo floor when it is extended. If you do so, it could cause damage.
When sliding the cargo floor back in, do not reach under the floor. Otherwise there is a risk of injury.◀

Raising cargo floor

For access to the spare wheel or other stored items:

Swing the cargo floor up and secure it with the rod, refer to illustration.

If your vehicle has a partition net: Take the bag with the partition net out of the retainer, refer to page 125, before you raise the cargo floor. Otherwise, the bag could slide downward.◀

Avoid overloading the vehicle so that the permissible loading capacity of the tires is not exceeded. Overloading can lead to overheating and increases the rate at which damage develops inside the tires. The ultimate result can assume the form of a sudden air loss.◀

Determining loading limit

1. Locate the following statement on your vehicle's placard*:

   The combined weight of occupants and cargo should never exceed XXX lbs. or YYY kg, otherwise the vehicle may be damaged and unstable driving conditions may result.◀

2. Determine the combined weight of the driver and passengers that will be riding in your vehicle
3. Subtract the combined weight of the driver and passengers from XXX lbs. or YYY kg
4. The resulting figure equals the available amount of cargo and luggage load capacity.
   For example, if the XXX amount equals 1,350 lbs. and there will be five 150 lbs. passengers in your vehicle, the amount of available cargo and luggage load capacity is 600 lbs.:
   1,350 lbs. minus 750 lbs. = 600 lbs.
5. Determine the combined weight of luggage and cargo being loaded into the vehicle. That weight may not safely exceed the available cargo and luggage load capacity calculated in step 4
6. If your vehicle will be towing a trailer, load from your trailer will be transferred to your vehicle. Consult the manual for transporting a trailer to determine how this may reduce the available cargo and luggage load capacity of your vehicle.

Online Edition for Part No. 01 41 0 159 867 - © 07/05 BMW AG

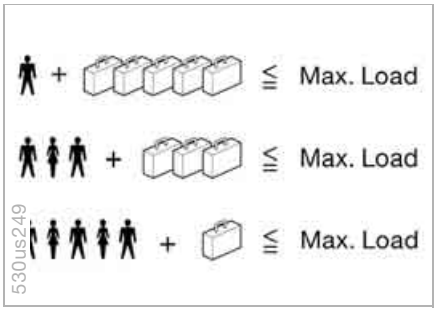

Load:

The permitted load is the total of the weight of occupants and cargo/luggage. The greater the weight of occupants, the less cargo/luggage can be transported.

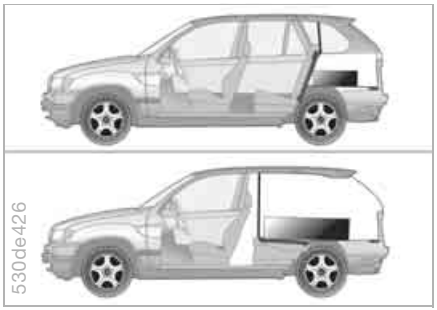

Stowing cargo

- ▷ Use the partition net to protect the occupants, refer to page 125
- ▷ Position heavy cargo as far forward as possible directly behind the backrests and as low as possible
- ▷ Cover sharp edges and corners
- ▷ Do not pile objects higher than the top edge of the backrest
- ▷ Appropriately wrap objects that could strike the rear window while driving
- ▷ If you are transporting very heavy loads when the rear seat is not occupied, secure the outer safety belts in the opposite buckles.

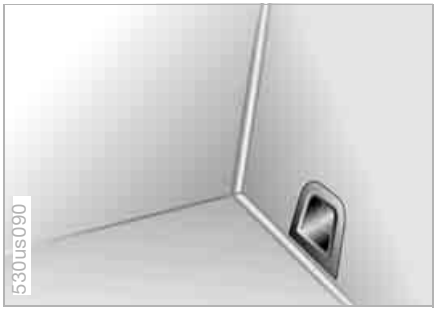

Securing load

- ▷ Secure smaller, light pieces with the retaining straps or a luggage net*, or use elastic straps, refer to page 37
- ▷ Heavy-duty cargo straps* for securing larger and heavier objects are available at your BMW Sports Activity Vehicle center. The lashing eyes provided at the corners of the cargo area serve for mounting these heavy-duty cargo straps
- ▷ Read and comply with the information enclosed with the heavy-duty cargo straps.

Always position and secure the load as described above. If you do not, it can endanger the passengers during braking or evasive maneuvers. Do not exceed the permissible gross vehicle weight and the permissible axle loads, refer to page 182. If you do, the operating safety of the vehicle is no longer ensured and you are in violation of the law.
You should never transport heavy or hard objects unsecured in the passenger compartment, as they could fly around and pose a safety hazard to the vehicle's occupants even during abrupt braking or evasive maneuvers.◀

Roof-mounted luggage rack*

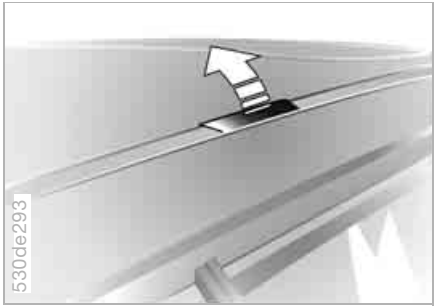

A special rack system is available as an option for your BMW. Please comply with the precautions included with the installation instructions.

Mounting points

Access to the mounting points:
To fold up the cover, refer to arrow, please use the tool which is provided with the rack system.

Loading luggage rack

Roof-mounted luggage racks raise the center of gravity of the vehicle when they are loaded and therefore significantly effect the vehicle's handling and steering response.

It is thus crucial never to exceed the approved roof weight, the approved gross vehicle weight or the axle loads when loading the rack.

You will find the specifications under Technical data on page 182.

Make sure that the load is distributed evenly, and that it does not extend outward to beyond the limits of the loading surface. Always load the heaviest pieces on the bottom. Be sure that adequate clearance is maintained for raising the panorama glass roof, and that objects do not project into the opening path of the liftgate.

Always ensure that roof-mounted loads are tightly secured, as loose loads can shift or even fly off the roof, posing a serious hazard for following traffic.◀

Drive smoothly. Avoid sudden acceleration and braking maneuvers. Take corners gently.

Online Edition for Part No. 01 41 0 159 867 - © 07/05 BMW AG

Online Edition for Part No. 01 41 0 159 867 - © 07/05 BMW AG

Overview

Controls and features

Operation, maintenance

Owner service procedures

Technical data

Index

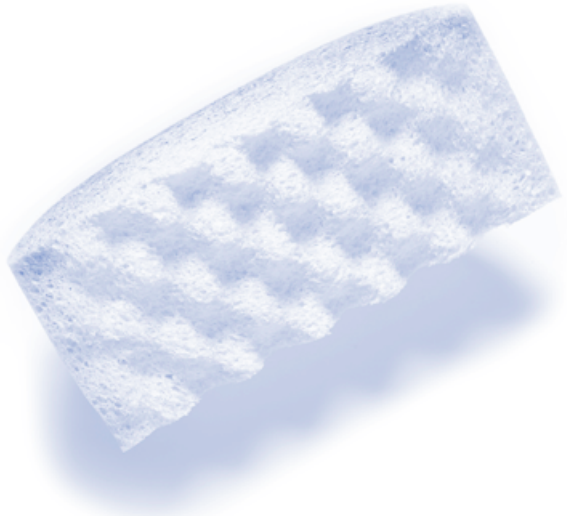

Breaking-in

Moving parts should be allowed to break in. To ensure that your vehicle provides maximum economy throughout a long service life, we request that you comply with the following instructions:

Engine and differential

Obey your local and state maximum speed limits.

Up to 1,200 miles/2,000 km:

Drive at varying engine speeds and road speeds, but do not exceed 4,500 rpm and the following road speeds during this initial period:

▷ 6-cylinder engine
100 mph/160 km/h
▷ 8-cylinder engine
106 mph/170 km/h

Avoid full-throttle operation and use of the transmission's kick-down mode during these initial miles.

From 1,200 miles/2,000 km:

The engine and vehicle speed can gradually be increased.

Tires

Due to technical factors associated with their manufacture, tires do not achieve their full traction potential until after an initial break-in period. Therefore, drive reservedly during the first 200 miles/ 300 km.

Obey your local and state maximum speed limits.

When the vehicle is operated on wet or slushy roads, a wedge of water may form between the tire and the road surface. This phenomenon is referred to as hydroplaning and can lead to partial or complete loss of traction, vehicle control and braking effectiveness. Reduce your speed on wet roads.◀

Brake system

Brakes require an initial break-in period of approx. 300 miles/500 km to achieve optimal contact and wear patterns between brake pads and rotors.

To break in the separate handbrake drums, apply the handbrake lightly when coasting to a standstill at a traffic signal, for instance, provided that traffic conditions allow you to do so.

To avoid corrosion, repeat this procedure from time to time.

The brake lamps do not light up when the handbrake is applied. Vacuum for the brake system servo unit on your BMW is available only when the engine is running. When you move the vehicle with the engine switched off, when towing, for instance, substantially higher levels of pedal force will be required to brake the vehicle.◀

Clutch

The function of the clutch is only at its optimized level after a distance driven of approx. 300 miles/500 km. During this break-in period, engage the clutch gently.

Following component replacements

Observe the break-in instructions again if previously addressed components must be replaced again during subsequent driving.

Online Edition for Part No. 01 41 0 159 867 - © 07/05 BMW AG

Closing liftgate/tailgate

Operate the vehicle only when the tailgate and liftgate are completely closed. Otherwise, exhaust fumes could enter into the passenger compartment.◀

However, if special circumstances should make it absolutely necessary to operate the vehicle with the liftgate/tailgate open:

1. Close all windows and the panorama glass roof
2. Increase the air supply for the air conditioner or automatic climate control to a high level, refer to page 105 or 109.

Hot exhaust system

Extreme temperatures occur on the exhaust system on any vehicle. Do not remove the heat shields installed adjacent to it, and never apply undercoating to them. When driving, standing at idle and while parking, take care to avoid possible contact between a hot exhaust system and any highly flammable materials such as hay, leaves, grass etc. Otherwise, there is a danger of ignition and fire, with the risk of serious injuries and damage.◀

Mobile communications devices in vehicle

BMW advises against using mobile communications devices such as mobile phones inside the vehicle unless they are directly connected to the external antenna. Otherwise, it is impossible to prevent a mutual interference of the vehicle electronics with the mobile phone device. Also, there is no guarantee that the radiation generated by the transmission will be conveyed out from the interior of the vehicle.◀

When vehicle is parked

Condensation forms in the air conditioner system during operation and then exits under the vehicle. Traces of water on the ground are therefore normal.

Brakes

Do not drive with your foot resting on the brake pedal. Even light but consistent pedal pressure can lead to excessively high temperatures, brake wear and possibly even brake failure.◀

Road hazards

If road hazards, obstacles or curbs are unavoidable, only drive over them very slowly and carefully, otherwise the wheels and suspension parts, especially on vehicles fitted with low profile tires, can be damaged.◀

For more information on wheels and tires, refer to page 146.

Before driving into a car wash

Fold in the exterior mirrors, refer to page 53, otherwise they could be damaged due to the width of the vehicle.

Hydroplaning

When driving on wet or slushy roads, reduce road speed. If you do not, a wedge of water can form between tires and road surface. This state can cause a partial or total loss of contact with the road surface, of braking control and of control over the vehicle.◀

Driving through water

Do not drive through water on the road if it is deeper than 20 in/ 50 cm, and then only at walking speed at the most. Otherwise, the vehicle's engine, the electrical systems and the transmission may be damaged. When equipped with 2-axle self leveling suspension*, switch the vehicle into the Off-Road setting before driving through, refer to page 97.◀

Using handbrake on slopes

Do not hold the vehicle in place on slopes by slipping or riding the clutch; use the handbrake instead. Otherwise, severe clutch wear will result.◀

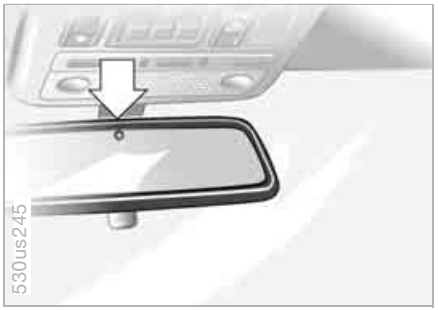

Interior and exterior mirrors, automatic dimming feature*

Two photocells serve to control the automatic dimming of the interior and exterior rearview mirrors. One photocell is in the mirror glass, refer to arrow, while the other is on the back of the mirror, offset somewhat from the first.

For trouble-free operation, keep the photocells clean and do not cover the area between the interior rearview mirror and the windshield. Do not attach any kind of stickers to the windshield in front of the mirror either.

On poor roads

When you are driving on poor roads, there are a few points which you should strictly observe – for your own safety, for that of your passengers, and for the safety of the vehicle:

Driving on unpaved terrain can cause damage to the vehicle.◀

- ▷ Always adapt the driving speed to the road conditions. The rougher or steeper the road surface is, the lower the speed should be
- ▷ You can operate your vehicle on uphill and downhill gradients with a maximum slope of 50%. If you want to drive on uphill or downhill gradients of this kind, make sure beforehand that the engine oil and coolant levels are near the max mark, refer to pages 152 and 154.
  Use the HDC Hill Descent Control when driving down steep grades, refer to page 94.
  It is possible to start off on grades of up to 33%.
  The permissible body roll is also 50%
- ▷ While driving, watch carefully for obstacles such as rocks or holes. Try to avoid these obstacles whenever possible

Online Edition for Part No. 01 41 0 159 867 - © 07/05 BMW AG

▷ Please note that it is possible for the undercarriage to touch the ground, for example on crests and bumpy roads. The ground clearance of the vehicle is:
– without self-leveling suspension
X5 3.0i, 4.4i: 8 in/20 cm
X5 3.0d: 7 in/17.5 cm
– with 2-axle self-leveling suspension*
6.5-9 in/16.5-22 cm, depending on the level selected.

▷ Only drive through water up to a maximum depth of 20 in/50 cm and only at walking speed, making sure not to stop in the process. When equipped with 2-axle self leveling suspension*, switch the vehicle to the Off-Road setting before driving through, refer to page 97.
After leaving the water, apply the footbrake lightly several times while driving at low speeds so as to dry the brakes by braking and to prevent decreased braking action due to wetness.

Back onto paved road

Our recommendation that you observe the following points after driving on adverse road surfaces is not intended as a beauty treatment for your BMW. Instead, it is intended to maintain driving safety:

▷ Clean the worst of the dirt from the body and inspect the undercarriage for damage.

▷ Clean mud, snow, ice etc. from the wheels and tires and check the wheels for damage.

▷ Check to determine whether rocks, gravel or accumulations of dirt on the brake rotors and calipers could influence braking performance. Remove all such foreign objects.

▷ In order to clean the brake rotors, apply the footbrake gently several times while driving at a low speed. Be sure that following traffic is not endangered by this.

▷ For cleaning the handbrake, apply the lever slightly at approx. 25 mph/ 40 km/h and continue to drive for approx. 200 yards/200 meters, provided that traffic conditions allow you to do so.

Online Edition for Part No. 01 41 0 159 867 - © 07/05 BMW AG

Emergency stops

You brake most effectively when you apply maximum pedal pressure in situations requiring it: emergency stops. Since the vehicle maintains steering responsiveness, you can nevertheless avoid possible obstacles with a minimum of steering effort.

Pulsation at the brake pedal combined with sounds from the hydraulic circuits indicates to the driver that ABS is in its active mode.

Brake fluid level

If the brake fluid level is too low and brake pedal travel has become longer, there may be a malfunction in one of the two brake system's hydraulic circuits.

Proceed to the nearest BMW Sports Activity Vehicle center. In so doing, increased pressure on the brake pedal may be required, and slight pulling to the side and longer braking distances may result. Please remember to adapt your driving style accordingly.◀

Disk brakes

When the vehicle is driven only occasionally, during extended periods when the vehicle is not used at all, and in operating conditions where brake applications are less frequent, there is an increased tendency for corrosion to form on rotors, while contaminants accumulate on the brake pads. This occurs because the minimal pressure that the pads must exert to clean the rotors during brake applications is not reached.

If the brake rotors are corroded, they will tend to respond to braking with a pulsating effect that even extended application will fail to cure.

When driving in wet conditions and in heavy rain, it is advisable to apply light pressure to the brake pedal from time to time. Monitor traffic conditions to ensure that this maneuver does not endanger other road users. The heat generated in this process helps dry the pads and rotors to ensure that the braking force is then immediately available when required.

Extended or steep mountain descents should be driven in the gear in which only minimal periodic brake application is required. This avoids excessive strain on the brakes and possible impairment of braking action.

Do not drive with the clutch pedal depressed, at idle or with the engine switched off, as otherwise there will be no engine braking effect or power assistance for braking and steering.
BMW recommends having brake inspections performed at a BMW Sports Activity Vehicle center only. If you do not, parts of the 4-wheel drive system could be damaged.
No floor mats, carpets or other objects may lie in the area of pedal travel, as otherwise pedal operation may be impaired.◀

Brake pads

For your own safety: use only brake pads that BMW has approved for your particular vehicle model. BMW cannot evaluate non-approved brake pads to determine if they are suited for use, and therefore cannot ensure the operating safety of the vehicle if they are installed.◀

Online Edition for Part No. 01 41 0 159 867 - © 07/05 BMW AG

Tire inflation pressure

Information for your safety

The condition of the tires and the maintenance of the specified tire pressure are crucial not only to the tire's service life, but also to driving comfort and most importantly, driving safety.

Checking pressure

Only check tire inflation pressure when the tires are cold. This means after a maximum of 1.25 miles/2 km driving or when the vehicle has been parked for at least 2 hours. When tires are warm, the tire inflation pressure increases.

Check the tire inflation pressure regularly and correct it as needed, even on the spare wheel: at least twice a month and before starting long trips. If you fail to observe this precaution, you may be driving on tires with incorrect tire pressures, a condition that can not only compromise your vehicle's driving stability, but also lead to tire damage and the risk of an accident. Do not drive with deflated, i.e. flat, tires. A flat tire will seriously impairs your vehicle's handling and braking response. Attempts to drive on a flat tire can lead to loss of control over the vehicle.◀

After correcting the inflation pressure(s), always reinitialize the Flat Tire Monitor, refer to page 99.◀

Inflation pressures for factory-installed tires

The tire inflation pressure specifications for your factory-installed tires at ambient temperature are listed on the edge of the driver's door and can be consulted when the door is open.

Inflation pressures

The tire pressure tables in the following pages give all of the pressure specifications for the tire sizes indicated at ambient temperature.

The inflation pressures apply to the tire sizes and tire brands respectively approved and recommended by BMW; a list of these is available from your BMW Sports Activity Vehicle center.◀

Tire inflation pressure

For correct identification of the right tire inflation pressure for your tires, observe the following:

▷ Tire sizes for your vehicle
▷ Load conditions
▷ Maximum allowable driving speed

Tire inflation pressures for driving up to 100 mph or 160 km/h:

For normal driving up to 100 mph or 160 km/h adjust pressures to the respective tire inflation pressures listed on the following page in the traveling speeds column for normal driving at speeds up to a maximum of 100 mph or 160 km/h to achieve optimum driving comfort.

The permissible top speed for these tire inflation pressures is 100 mph or 160 km/h. Do not exceed this speed, as otherwise tire damage and accidents may result.◀

Tire inflation pressures for driving above 100 mph or 160 km/h:

In order to drive at maximum speeds in excess of 100 mph or 160 km/h, please observe, and, if necessary, adjust tire pressures for speeds exceeding 100 mph or 160 km/h from the relevant table on the following pages. Otherwise tire damage and accidents could occur.◀

Online Edition for Part No. 01 41 0 159 867 - © 07/05 BMW AG

BMW	Tire size	Pressure specifications in psi/kPa					
		Traveling speeds up to a max. of 100 mph/160 km/h		Traveling speeds including those exceeding 100 mph/160 km/h			
	All pressure specifications in the table are indicated in psi/ kilopascal with cold tires, cold = ambient temperature						
	235/65 R 17 104 H M+S 255/55 R 18 105 H M+S	32/220	33/230	32/220	32/220	32/220	39/270
X5 3.0i	Front: 255/50 R 19 103 V Rear: 285/45 R 19 107 V Front: 275/40 R 20 102 W Rear: 315/35 R 20 106 W	32/220 – 32/220 –	– 32/220 – 32/220	32/220 – 32/220 –	– 32/220 – 32/220	32/220 – 32/220 –	– 39/270 – 39/270

You will find more information on permissible loads and weights on page 182.

Tire inflation pressure

BMW	Tire size	Pressure specifications in psi/kPa					
		Traveling speeds up to a max. of 100 mph/160 km/h		Traveling speeds including those exceeding 100 mph/160 km/h			
	All pressure specifications in the table are indicated in psi/ kilopascal with cold tires, cold = ambient temperature					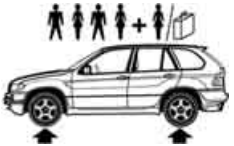	
	235/65 R 17 104 H M+S 255/55 R 18 105 H M+S	32/220	33/230	32/220	33/230	32/220	39/270
X5 4.4i	Front: 255/50 R 19 103 V Rear: 285/45 R 19 107 V Front: 275/40 R 20 102 W Rear: 315/35 R 20 106 W	32/220 – 32/220 –	– 32/220 – 32/220	32/220 – 32/220 –	– 32/220 – 32/220	32/220 – 32/220 –	– 39/270 – 39/270
X5 4.8is	Front: 275/40 R 20 102 W Rear: 315/35 R 20 106 W 255/55 R 18 105 H M+S	32/220 – 32/220	– 35/240 35/240	32/220 – 32/220	– 35/240 35/240	33/230 – 33/230	– 39/270 39/270
	Compact wheel: T 155/80 R 19 114 M	61/420					

You will find more information on permissible loads and weights on page 182.

Online Edition for Part No. 01 41 0 159 867 - © 07/05 BMW AG

Tire identification marks

Knowledge of the labeling on the side of the tire makes it easier to identify and choose the right tires.

Tire size

e.g. 235/65 R 17 104 H

Nominal width in mm

Cross-sectional ratio in %

Belted construction radial

Rim diameter in inches

Load index, not with ZR tires

Speed code letter, with ZR tires before the R

Speed code letter:

Q = up to 105 mph/160 km/h
T = up to 118 mph/190 km/h
H = up to 131 mph/210 km/h
V = up to 150 mph/240 km/h
W = up to 167 mph/270 km/h

Tire Identification Number

Tires with DOT codes meet the guidelines of the U.S. Department of Transportation.

DOT code:

e.g. DOT xxxx xxx 2605

Manufacturer's code for tire brand

Tire size and tire model

Tire age

Tire age

The manufacturer of your BMW recommends that all tires, i.e. including the spare wheel, be replaced regardless of the actual wear after 6 years at the latest.

The tire's date of manufacture is indicated on the sidewall:
DOT... 2605 indicates that the tire was manufactured in week 26 of 2005.

Uniform Tire Quality Grading

Quality grades can be found where applicable on the tire sidewall between tread shoulder and maximum section width. For example:

DOT Quality Grades

Tread wear

Traction AA A B C

Temperature A B C

All passenger car tires must conform to Federal Safety Requirements in addition to these grades.◀

Tread wear

The tread wear grade is a comparative rating based on the wear rate of the tire when tested under controlled conditions on a specified government test course.

For example, a tire graded 150 would wear one and one-half, 1½, times as well on the government course as a tire graded 100. The relative performance of tires depends upon the actual conditions of their use, however, and may depart significantly from the norm due to variations in driving habits, service practices and differences in road characteristics and climate.

Traction

The traction grades, from highest to lowest, are AA, A, B, and C.

Those grades represent the tire's ability to stop on wet pavement as measured under controlled conditions on specified government test surfaces of asphalt and concrete. A tire marked C may have poor traction performance.

The traction grade assigned to this tire is based on straight-ahead braking traction tests, and does not include acceleration, cornering, hydroplaning, or peak traction characteristics.◀

Temperature

The temperature grades are A, the highest, B, and C, representing the tire's resistance to the generation of heat and its ability to dissipate heat when tested under controlled conditions on a specified indoor laboratory test wheel.

Sustained high temperature can cause the material of the tire to degenerate and reduce tire life, and excessive temperature can lead to a sudden flat tire. The grade C corresponds to a level of performance which all passenger car tires must meet under the Federal Motor Vehicle Safety Standard No. 109. Grades B and A represent higher levels of performance on the laboratory test wheel than the minimum required by law.

The temperature grade for this tire is established for a tire that is properly inflated and not overloaded. Excessive speed, underinflation, or excessive loading, either separately or in combination, can cause heat buildup and possible a tire failure.◀

M+S

Winter and all-season tires.
These have better winter properties than summer tires.

Wheel/tire condition

Wheel/tire damage

Inspect your wheels and tires frequently for tread wear, signs of damage and for foreign objects lodged in the tread. Check the tread pattern depth.

Please note that low-profile tires make your wheels, tires and suspension parts more susceptible to road hazard and consequential damages. Unusual vibrations encountered during normal vehicle operation can indicate tire failure or some other vehicle malfunction. This can, for example, be caused by driving over curbs. This is also true for irregularities in the vehicle's handling characteristics, such as a pronounced tendency to pull to the left or right. Should this occur, respond by immediately reducing your speed. Carefully proceed – or have your vehicle towed – to the nearest BMW Sports Activity Vehicle center or tire dealer to have the wheels or tires inspected. Tire damage, extending to sudden and complete loss of pressure in extreme cases, can pose a potentially lethal safety hazard for the vehicle's occupants and other road users alike.◀

Online Edition for Part No. 01 41 0 159 867 - © 07/05 BMW AG

Tire tread

The tread depth should not fall below 0.12 in/3 mm although, for example, European regulations only require a minimum tread depth of 0.063 in/ 1.6 mm.

At tread depths below 0.12 in/3 mm, there is an increased risk of high-speed hydroplaning, even when only small amounts of water are present on the road surface.

As winter tires display a noticeable loss in their ability to cope with cold-weather driving conditions once the tread wears to below 0.16 in/4 mm, you should always have such tires replaced to ensure continued safety.

Wear indicators at the tread-groove base are distributed over the tire's circumference and are marked on the side of the tire with TWI – Tread Wear Indicator. If the tire tread has worn down to the wear indicators, then the legally permissible tread depth limit of 0.063 in/1.6 mm has been reached.

Online Edition for Part No. 01 41 0 159 867 - © 07/05 BMW AG

Have new wheels and tires installed only by your BMW Sports Activity Vehicle center or tire shop that works according to BMW repair procedures with correspondingly trained personnel. If this work is not carried out properly, there is a danger of subsequent damage and related safety hazards.◀

Retreaded tires

BMW does not recommend the use of retreaded tires, otherwise driving safety may be reduced. The reason for this is that possible variations in the design and aging – which could be substantial – of the tire casing can result in a limited service life.◀

The right wheels and tires

BMW recommends that you use only wheel and tire combinations that BMW has tested and approved for your particular vehicle. Variations in factors such as manufacturing tolerances mean that even wheels and tires with identical official size ratings could actually have different dimensions than the approved units – these differences could lead to body contact, and with it the risk of severe accidents. If non-approved wheels and tires are used, BMW cannot evaluate their suitability, and therefore cannot be held liable for driving safety.◀

You can ask your BMW Sports Activity Vehicle center for the correct wheel/tire combination.

The correct wheel/tire combination also affects various systems whose function would otherwise be impaired, e.g. ABS, DSC, xDrive.

To maintain good handling and vehicle response, use only tires of a single tread configuration from a single manufacturer. After tire damage, always remember to have the original wheel and tire combination remounted on the vehicle as soon as possible.

Recommended tire brands:
BMW recommends particular tire brands for each tire size. You will recognize them by the clearly visible BMW identification on the tire sidewall.

With proper use, these tires meet the highest standards for safety and handling characteristics.

Online Edition for Part No. 01 41 0 159 867 - © 07/05 BMW AG

Special features of winter tires

BMW recommends winter tires for use in cold winter driving conditions. Although all-season M+S tires provide better winter traction than summer tires, they generally fail to provide the same levels of cold-weather performance as winter tires.

When switching to winter tires, observe the description under Tire condition, page 146, and Replacing wheels/tires.

Observing speed ratings:

Never exceed the maximum speed for which the winter tires are rated. Unprofessional attempts by laymen to service tires can lead to damage and accidents. Have this work performed by skilled professionals only. The technicians at your BMW Sports Activity Vehicle center will be glad to assist you with the required professional knowledge and specialized equipment.◀

Storage

Store wheels or tires in a cool, dry place, protecting them against light whenever possible. Always protect tires against all contact with oil, grease and fuels.
Do not exceed the maximum tire inflation pressure indicated on the side wall of the tire.

Snow chains*

Only certain fine-link snow chains are tested, classified as road-safe, and recommended by BMW. Consult your BMW Sports Activity Vehicle center for details. Use is only permitted in pairs on the rear wheels with the following tire sizes:

X5 4.8is: 255/55 R 18
All other models: 235/65 R 17

Follow the manufacturer's instructions when installing snow chains. Do not exceed a maximum speed of 30 mph/ 50 km/h.

Do not initialize the Flat Tire Monitor after mounting snow chains, as the monitor may then incorrectly indicate flat tires.
When you are driving with snow chains, it can be beneficial to switch off DSC briefly, refer to page 93.◀

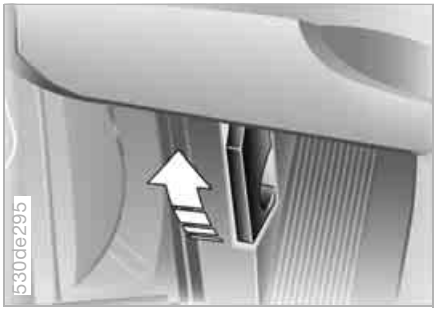

Unlocking

Pull the lever located under the left side of the instrument cluster.

Never attempt to perform any service or repair operations on your vehicle without the required professional technical training. If you are not familiar with the regulations to be observed, only have work on your vehicle carried out by a BMW Sports Activity Vehicle center or a workshop that uses personnel trained in accordance with BMW requirements. If this work is not carried out properly, there is a danger of subsequent damage and related safety hazards.◀

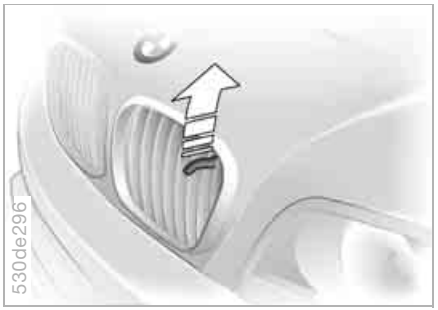

Opening

Pull the release handle and open the hood.

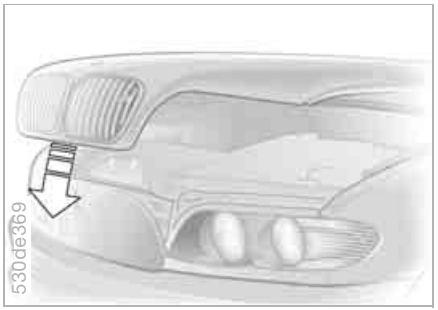

Closing

Allow the hood to fall from a height of about 12 in/30 cm so that it audibly engages.

Observe the same precautions that apply to all closing operations by ensuring that the hood's travel range is clear and unobstructed before allowing the hood to fall into position.
If you discover that the hood is not completely closed while driving, stop immediately and close it securely.◀

Online Edition for Part No. 01 41 0 159 867 - © 07/05 BMW AG

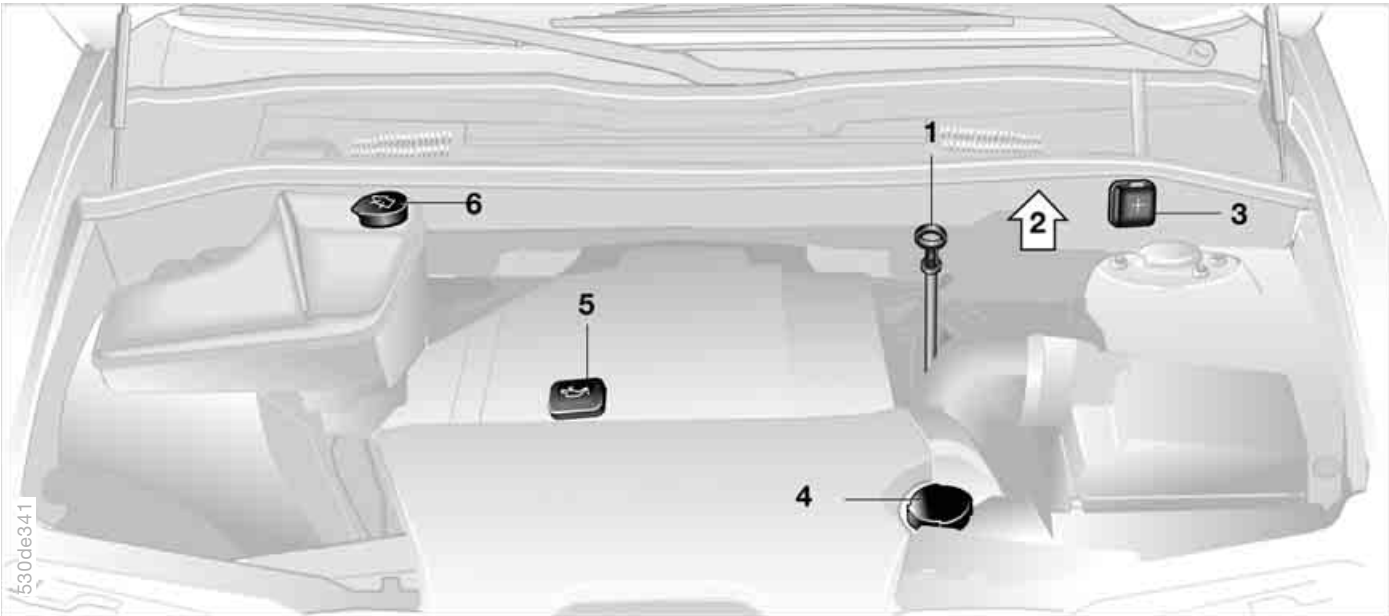

1 Engine oil dipstick 152
2 Brake fluid reservoir, located beneath the microfilter cover 155
3 Auxiliary terminal for jump starting 174
4 Coolant expansion tank 154
5 Engine oil filler neck 152
6 Reservoir for windshield and headlamp washer system 152

Washer fluid

Windshield and headlamp washer system

Approximate capacity is 8.2 US quarts/ 7.8 liters.

Fill with water and – if required – with the addition of a washer antifreeze, according to manufacturer's recommendations.

We recommend that you mix the washer fluid before adding it to the reservoir.◀

Antifreeze agent for the washer systems is flammable. For this reason, keep it away from sources of flame and store it only in its original containers. Store it so that it is inaccessible to children. Comply with the instructions on the containers.◀

Engine oil

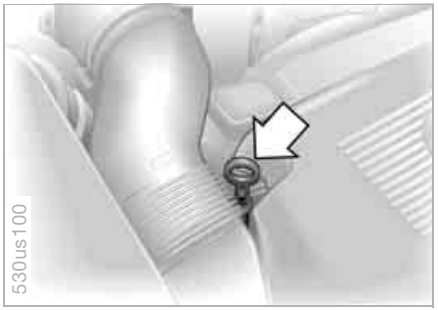

Checking oil level

Oil consumption depends on driving style and operating conditions.

1. With the engine at operating temperature, i.e. after at least 6 miles/10 km of continuous driving, park the vehicle in a horizontal position
2. Switch off the engine
3. After approx. 5 minutes, pull the dipstick out and wipe it off with a clean lint-free cloth, paper towel, or similar material
4. Slide the dipstick carefully all the way into the dipstick tube and pull it out again.
   The oil level should be in between the two marks on the dipstick
5. Slide the dipstick all the way into the dipstick tube again.

Online Edition for Part No. 01 41 0 159 867 - © 07/05 BMW AG

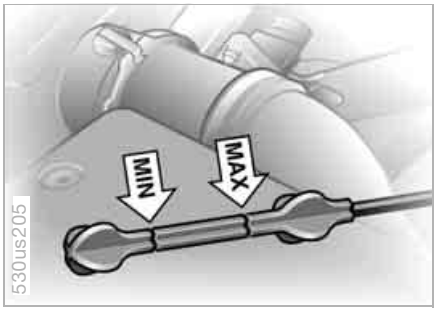

The oil volume between the two marks on the dipstick corresponds to approx. 1.1 US quarts/1 liter.

Do not fill beyond the upper mark on the dipstick. Excess oil will damage the engine.◀

X5 4.8is:
With a very sporty driving style, the engine oil level should be at the upper mark on the dipstick.

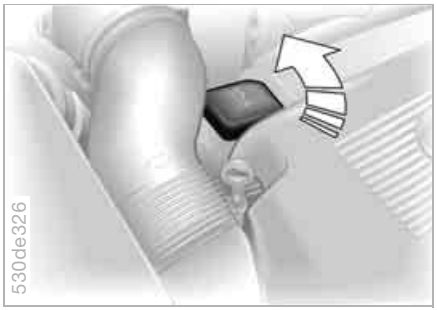

Adding engine oil

Wait until the level has dropped to just above the lower mark on the dipstick before adding oil.

Add oil within the next 30 miles/ 50 km, otherwise, the engine could be damaged.◀

Keep oil, grease, etc. out of reach of children and heed warnings on the containers to avoid health risks.◀

Oil change:
Have oil changed only by your BMW Sports Activity Vehicle center or by a repair shop that works according to BMW guidelines with appropriately trained personnel.

Specified engine oils

The quality of the engine oil selected has critical significance for the operation and service life of an engine. Based on extensive testing, BMW has approved only certain engine oils.

Only use approved BMW High Performance Synthetic Oil.

If you are unable to obtain BMW High Performance Synthetic Oil, you can add small amounts of other synthetic oil in between oil changes. Only use oils with the API SH specification or higher.

Ask your BMW Sports Activity Vehicle center for details concerning the specific BMW High Performance Synthetic Oil or synthetic oils which have been approved.◀

You can also call BMW of North America at 1-800-831-1117 or visit this website: www.bmwusa.com to obtain this information.

Never use oil additives as they can damage your engine under some circumstances.◀

Engine oil

Viscosity ratings

Viscosity is the oil flow rating as established in SAE classes.

The selection of the correct SAE class depends on the climatic conditions in the area where you typically drive your BMW.

Approved oils are in SAE classes 5W-40 and 5W-30.◀

These oils may be used for driving in all ambient temperatures.

Coolant

Do not open the cooling system when the engine is hot. Escaping coolant can cause burns.◀

Coolant is comprised of water and coolant additive. Not all commercially available additives are suitable for your BMW. Your BMW Sports Activity Vehicle center knows which additives are suitable.

Use only suitable additives, otherwise you could damage your engine. The additives can be harmful to your health.◀

Always observe all applicable environmental rules and regulations when disposing of coolant additives.◀

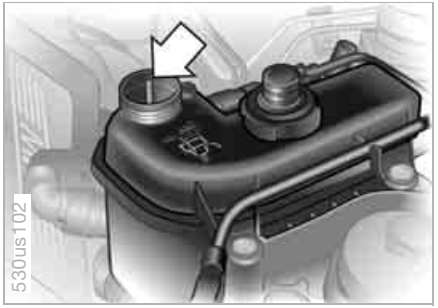

Checking coolant level

1. The engine must be at ambient temperature.
2. Start by turning the cap of the expansion tank counterclockwise. Pause to allow any accumulated pressure to escape, then open.
3. The coolant level is correct when the end of the red float is aligned with the upper edge of the filler opening, refer to the arrow in the illustration, or max. 0.8 in/2 cm higher, i. e. up to the mark on the float, refer also to the schematic diagram, next to the cap.

Online Edition for Part No. 01 41 0 159 867 - © 07/05 BMW AG

4. When necessary, slowly add coolant until the correct level is reached; do not overfill.
5. Close the cap and tighten snugly.
6. Have the cause of the coolant loss corrected as soon as possible.

Brake fluid

Brake fluid level

If the warning lamp lights up or the message CHECK BRAKE FLUID appears in the Check Control: stop immediately. The brake fluid in the reservoir has fallen to below the minimum level.

Add brake fluid

The brake fluid reservoir is located under the microfilter housing trim panel on the driver's side of the vehicle. For adding brake fluid or for determining and correcting the cause of brake fluid loss, consult your BMW Sports Activity Vehicle center. Your BMW Sports Activity Vehicle center is familiar with the specifications for factory-approved DOT 4 brake fluids.

Brake fluid loss may result in extended brake pedal travel. For this situation, refer to the notes on page 140.

Brake fluid is hygroscopic, that is, it absorbs moisture from the air over time.
In order to ensure the safety and reliability of the brake system, have the brake fluid changed every two years by a BMW Sports Activity Vehicle center. Refer also to the Service and Warranty Information Booklet for US models or the Warranty and Service Guide Booklet for Canadian models.
Brake fluid is toxic and also damages vehicle paintwork. Always store these agents in tightly-closed original containers kept well away from the reach of children.
Do not spill the fluid and do not refill the brake fluid reservoir to beyond the MAX mark. The brake fluid could ignite upon contact with hot engine parts and cause serious burns.◀

Always observe all applicable environmental rules and regulations when disposing of used brake fluid.◀

The BMW Maintenance System

The BMW Maintenance System helps maintain the road and driving safety of your BMW.

Please keep in mind that regular maintenance is not only necessary for the safety of your vehicle, but also plays a significant role in maintaining the resale value of the vehicle.

Service Interval Display

Conventional systems rely solely on distance traveled to determine when service is due. The BMW Maintenance System, on the other hand, began many years ago to take the actual conditions under which the vehicle is driven into consideration. After all, different drivers can accumulate mileage in very different ways.

From the point of view of maintenance, 62,000 miles/100,000 km accumulated in short-distance urban driving are not the equivalent of the same distance covered at moderate speeds in long-distance highway travel.

The BMW Maintenance System includes the Engine Oil Service and Inspections I and II.

Determining the maintenance intervals according to the actual loads on the vehicle covers every kind of operating situation. However, even those who drive only short distances, significantly less than 6,000 miles/10,000 km annually, should have the engine oil changed at least every 2 years since oil deteriorates over time, regardless of use.

Service and Warranty Information Booklet for US models/Warranty and Service Guide Booklet for Canadian models

For additional information on maintenance intervals and procedures, please refer to the Service and Warranty Information Booklet for US models or the Warranty and Service Guide Booklet for Canadian models.

As a precaution against corrosion, it is advisable to have the body checked for damage from rocks or gravel at the same time, depending upon operating conditions.

▷ Have your BMW Sports Activity Vehicle center do the maintenance and repair.
Be sure that all maintenance work is confirmed in the Service and Warranty Information Booklet for US models or the Warranty and Service Guide Booklet for Canadian models.
These entries will constitute your proof that the vehicle has received regular maintenance. They are also required for warranty claims.◀

Car care

For all information on this subject, refer to the Caring for your vehicle brochure.

Online Edition for Part No. 01 41 0 159 867 - © 07/05 BMW AG

OBD interface socket

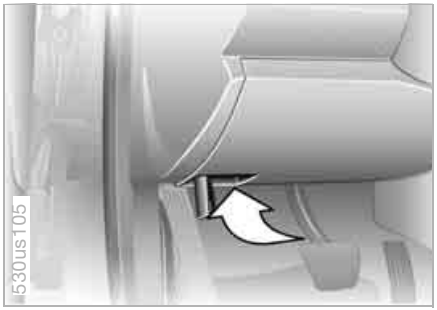

The interface socket for the Onboard Diagnostics is located on the left of the driver's side at the bottom of the instrument cluster and under a cover. The cover has the letters OBD on it.

The purpose of the OBD system is to ensure proper operation of the emission control system for the vehicle's lifetime. The system monitors emission-related components and systems for deterioration and malfunction.

SERVICE ENGINE SOON An illuminated indicator lamp informs you of the need for service, not of the need to stop the vehicle. However, the systems should be checked by your BMW Sports Activity Vehicle center at the earliest possible opportunity.

Display of the previously described malfunction in Canadian models.

Under certain conditions, the indicator lamp will blink or flash. This indicates a rather severe level of engine misfire. When this occurs, you should reduce speed and consult the nearest BMW Sports Activity Vehicle center as soon as possible. Severe engine misfire over only a short period of time can seriously damage emission control components, especially the catalytic converter.

When the filler cap is not properly tightened, the OBD system can detect the vapor leak and the indicator lamp will light up. If the filler cap is subsequently tightened, the indicator lamp should extinguish within a few days.◀

Event Data Recorders

Your vehicle may be equipped with one or more sensing and diagnostic modules or a recording device capable of recording or transmitting certain vehicle data or information. In addition, if you have a Subscription Service Agreement for the BMW Assist system, certain vehicle information may be transmitted or recorded in order to provide such services.

Online Edition for Part No. 01 41 0 159 867 - © 07/05 BMW AG

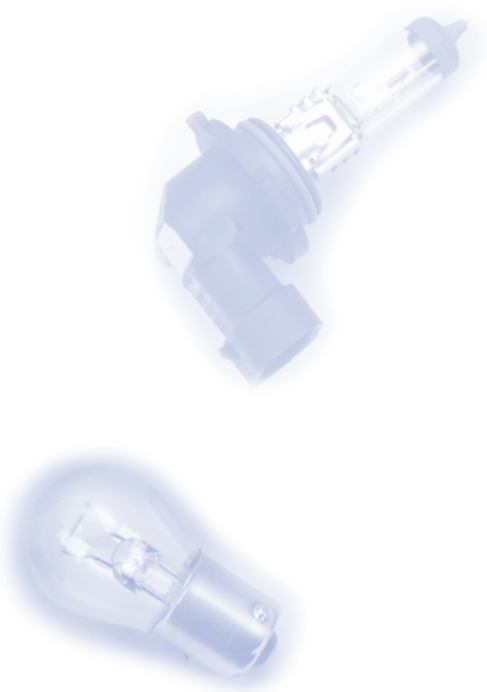

Overview

Controls and features

Operation, maintenance

Owner service procedures

Technical data

Index

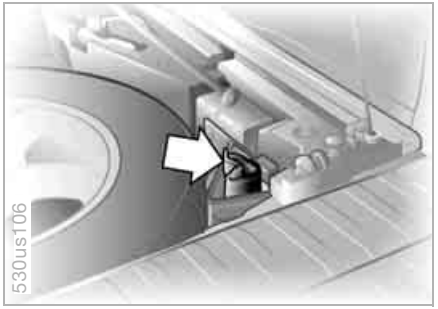

Under the cargo floor cover in a pocket.

Windshield wiper blades

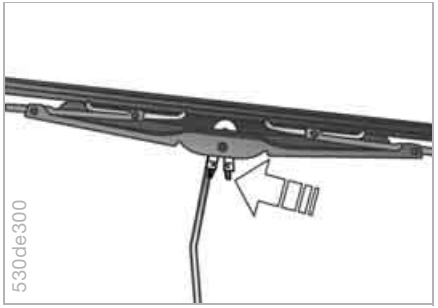

Front

1. Move the wiper to a fold-out position, refer to page 69
2. Lift the wiper arm and press the securing spring, refer to arrow
3. Pull the wiper blade off toward the wiper arm
4. Insert the new blade and snap it into place.

Fold the wipers back down onto the windshield before you turn the ignition key to position 1 or 2 again. If you do not, they could be damaged.◀

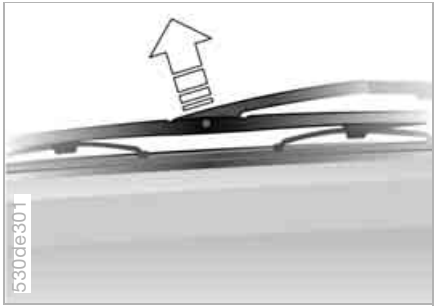

Rear

1. Hold the wiper blade on the window and remove/unclip the wiper arm at the articulated joint, refer to arrow
2. Insert a new wiper blade and press it on/clip it into the wiper arm.

Use only wiper blades approved by BMW.◀

The lamps and bulbs make essential contributions to the safety of your vehicle. For this reason, follow the instructions below carefully when replacing a bulb. If you are not familiar with any of the procedures, consult your BMW Sports Activity Vehicle center.

Never touch the glass on new bulbs with your bare fingers, as even minute amounts of contamination will burn into the bulb's surface and reduce its service life. Use a clean cloth, paper napkin, or a similar material, or hold the bulb by its metallic base.◀

A replacement bulb set is available from your BMW Sports Activity Vehicle center.

To prevent short circuits, before working on any electrical system, equipment or accessory you should always switch it off and disconnect the cable from the battery's negative terminal before starting.
To avoid possible injury or equipment damage when replacing bulbs, follow any instructions provided by the bulb manufacturer.◀

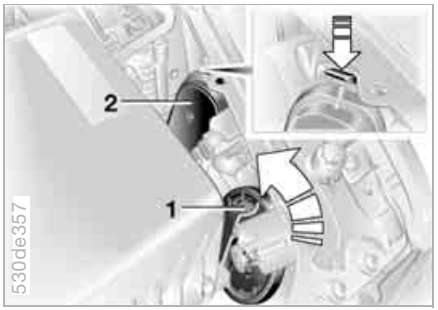

Releasing lamp cover

The illustration shows the right-hand side of the engine compartment.

1 Halogen low beams
Turn cover cap to left, refer to arrow

2 High beams and parking lamps
Press tab downward, refer to arrow

For checking and adjusting headlamp aim, please contact your BMW Sports Activity Vehicle center.◀

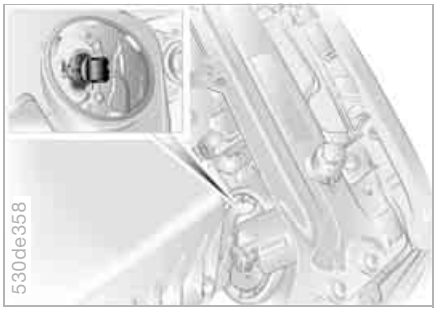

1 Halogen low beams

H7 bulb, 55 watts

The bulb is pressurized. Therefore, wear safety glasses and protective gloves. Otherwise there is a danger of injury if the bulb is accidentally damaged during replacement.◀

1. Remove the cover
2. Turn the bulb holder to the left and remove
3. Pull bulb out of bulb holder by base and replace.

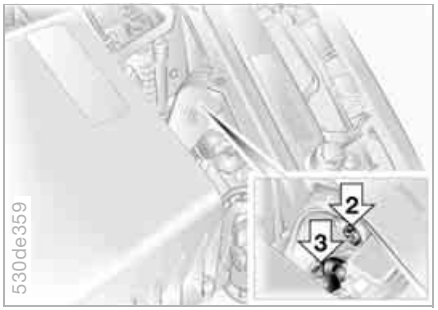

2 Halogen high beams

H1 bulb, 55 watts

The bulb is pressurized. Therefore, wear safety glasses and protective gloves. Otherwise there is a danger of injury if the bulb is accidentally damaged during replacement.◀

1. Remove the cover
2. Disconnect the plug
3. Unhook wire spring
4. Remove and replace the bulb.

3 Parking lamps and roadside parking lamps

10 watt bulb: H 10 W

1. Remove the cover
2. Disconnect the plug
3. Turn reflector module with bulb to left and remove
4. Replace module with bulb.

Xenon lamps*

The operating life of these lamp units is extremely long and the likelihood of failure very low, provided that they are not switched on and off a very great number of times. If one of these bulbs should nevertheless fail, it is possible to continue driving with great caution using the fog lamps, provided traffic laws in your area do not prohibit this.

To avoid risk of potentially fatal injuries: owing to the extremely high voltages at which these units operate, service work should always be entrusted to qualified personnel.◀

Front turn signals/side-marker lamps

Bulb S8 yellow

Please contact a BMW Sports Activity Vehicle center in case of a malfunction.

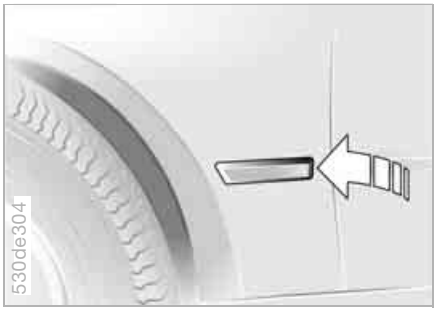

Side turn signals

5 watt bulb: WY 5 W

1. Use finger pressure against the rear end of the lamp, refer to arrow, to press it forward for removal
2. Apply gentle pressure to the bulb while turning it to the left and pull it out
3. Replace the bulb.

Online Edition for Part No. 01 41 0 159 867 - © 07/05 BMW AG

Front fog lamps

H11 bulb, 55 watts

The bulb is pressurized. Therefore, wear safety glasses and protective gloves. Otherwise there is a danger of injury if the bulb is accidentally damaged during replacement.◀

1. Pull the cover in front of the fog lamp forward.
2. Loosen the two screws, refer to arrows, and remove the fog lamp. When pulling out, overcome initial resistance and turn the headlamp slightly to the left.
3. Pull the cable connector off the bulb.
4. Turn the bulb to the left and remove.
5. Insert a new bulb in the headlamp and turn as far to the right as possible.
6. Connect the plug connector to the bulb, ensuring proper engagement.

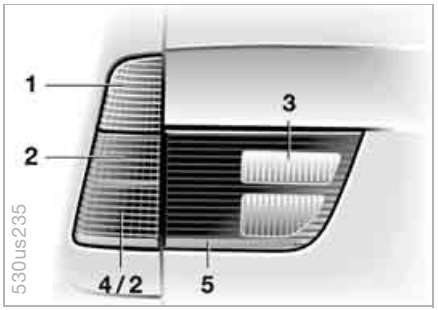

Tail lamps

21 watt bulbs: P 21 W and PY 21 W, recommendation: BMW special bulbs with neutral coloration

1 Turn signal

2 Rear lamp/side marker lamp

3 Backup lamp

4 Brake lamp

5 Reflector

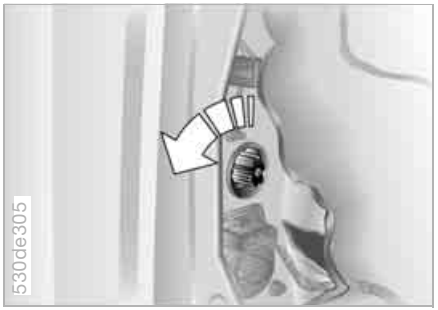

Lamps in the side panel:

1. Open the cover in the side panel
2. Lift the side panel if necessary
3. Apply gentle pressure to the bulb holder while turning it to the left for removal and replacement
4. Remove the bulb.

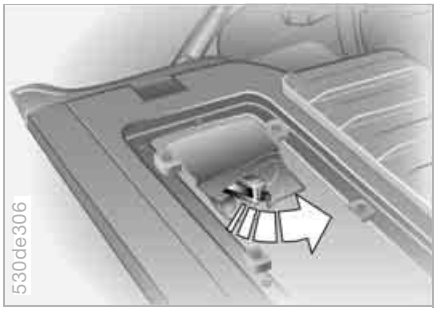

Lamps in the tailgate:

1. Unclip the trim panel in the tailgate with a screwdriver
2. Apply gentle pressure to the bulb holder while turning it to the left for removal and replacement
3. Remove the bulb.

Center brake lamp

LED strip in the rear spoiler: please contact a BMW Sports Activity Vehicle center in case of a malfunction.

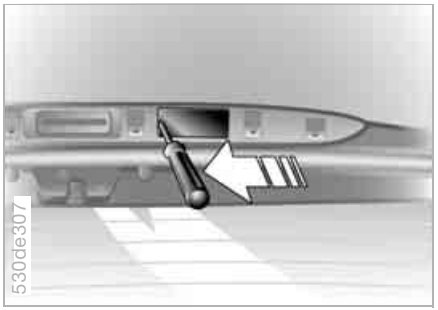

License plate lamps

5 watt bulb

1. Press the lamp out to the side with a screwdriver
2. Remove the lamp and replace the bulb.

Online Edition for Part No. 01 41 0 159 867 - © 07/05 BMW AG

Light-emitting diodes LEDs

Light-emitting diodes installed behind translucent lenses serve as the light source for many of the controls and displays in your vehicle. The concept behind their operation is related to that employed for lasers.

Do not remove the covers, and never stare into the unfiltered light several hours, as irritation of the retina could result.◀

Safety precautions to observe in the event of a flat and during all tire changes:
Park the vehicle as far as possible from passing traffic. Park on a firm, flat, surface. Switch on the hazard warning flashers.
Turn the steering wheel to the straight-ahead position, remove the key and engage the steering lock. Shift into 1st or reverse, selector lever in Park with automatic transmission, and engage the handbrake.
All passengers should be outside the vehicle and well away from your immediate working area, behind a guardrail, for instance.
If a warning triangle or portable hazard warning lamp is required, set it up on the roadside at an appropriate distance from the rear of the vehicle. Comply with all safety guidelines and regulations.
Change the wheel only on a level, firm surface that is not slippery. The vehicle or the jack could slip to the side if you attempt to raise the vehicle on a soft or slippery surface such as snow, ice, tiles, etc.
Position the jack on a firm support surface.
Do not place wooden blocks or similar objects under the jack. If this is done, the jack might not be able to reach its full support capacity because of the limited height. To avoid serious or fatal injury: never lie under the vehicle, and never start the engine while it is supported by the jack.◀

Your BMW has either a compact wheel for temporary use to ensure your mobility, or a spare wheel of the size 235/65 R 17. Please observe the differences in handling when removing the wheel from the cargo area.

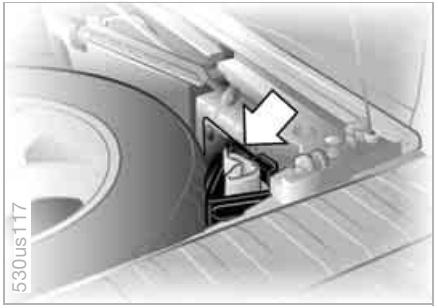

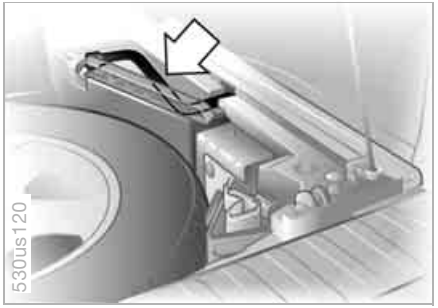

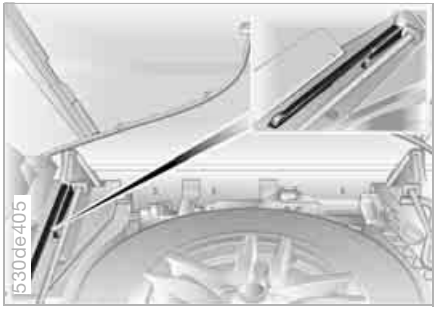

What you will need

In order to avoid rattling noises later, note the position of the tools when you remove them and return them to their original position when you are through using them.

▷ Two wheel chocks
Open liftgate and tailgate.
Raise the floor panel flap or pull-out cargo floor in the cargo area, refer to page 128 or 129. On vehicles with a compact wheel, remove the cover, refer to page 167.
Remove the wheel chocks, refer to arrow, next to the spare wheel

▷ Lug wrench
Located beside the spare wheel

▷ Handle for the jack
Remove from its holder

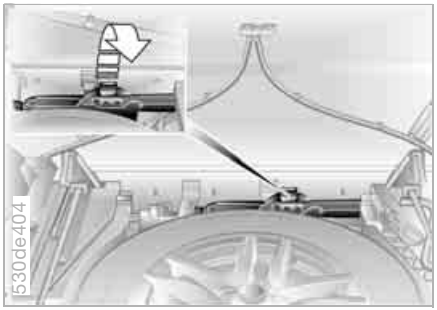

▷ Jack
Remove the rubber band from the holder, refer to arrow, and take out the jack.
Following use, crank down the vehicle jack completely again and clip in the crank.

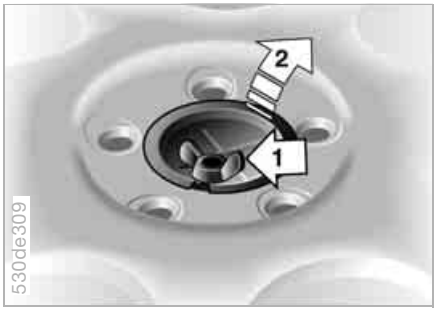

Compact wheel

Remove the cover under the floor panel flap.
Vehicles with pull-out cargo floor: the cover is secured at the rear on both sides with quick-release locks.

1. Loosen the wing nut 1
2. Remove the plate 2 to the side
3. Remove the wheel.

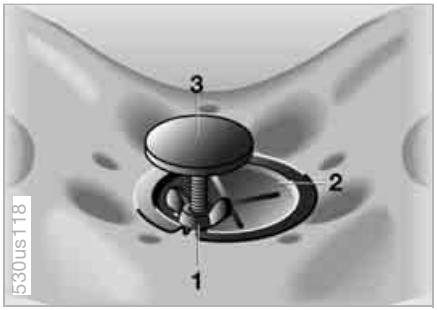

Spare wheel*

1. Loosen the wing nut 1
2. Remove the plate 2 to the side
3. Unscrew the threaded rod 3 completely.

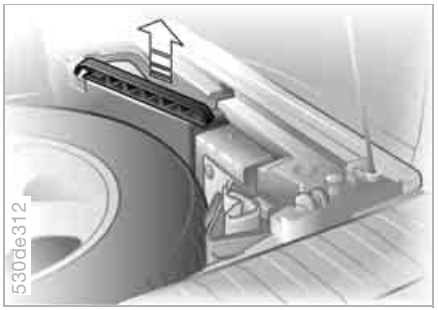

Removal aid for spare wheel

By using this device, you do not have to lift the spare wheel out of the recess by hand.
Its task is to help you to move the wheel onto the tailgate, from where you can easily lift it off.

1. Close the tailgate again
2. Grasp the handle of the removal aid behind the spare wheel with both hands and pull upward over the tailgate, refer to arrow.
3. Hook both buckles into the latch of the tailgate, refer to arrow; the tailgate is released.
4. Remove the support rod from the bracket.

Online Edition for Part No. 01 41 0 159 867 - © 07/05 BMW AG

5. Press the tailgate down and hold it there. The spare wheel is now pulled by means of the removal aid onto the tailgate.

Hold the tailgate in the opened position and do not allow it to spring upward abruptly. If you do so, there is a risk of vehicle damage and injury.◀

6. Insert the support rod in the tailgate lock and press down until it engages, refer to arrow 1; then lock hook of rod in striker, refer to arrow 2.

Make sure that the support rod is locked firmly in place. If you fail to do so, the tailgate could move upward quickly and cause personal injury and vehicle damage.◀

7. You can now release the locked tailgate and take down the spare wheel. It is recommended that you leave the tailgate locked into place until you have completed the wheel change and placed the wheel with the defective tire into the removal aid.

Procedure

1. Read carefully and comply with the safety precautions on page 165.
2. Secure the vehicle to prevent it from rolling:
   Place the wedges – chocks – behind the wheels on the side opposite the side you are lifting. If the vehicle is parked on a downward slope, place the wedges securely in front of the wheels. If the wheel must be changed on a surface with a more severe slope, take additional precautions to secure the vehicle from rolling.
3. Loosen the lug bolts 1/2-turn.
4. Insert the jack handle into the jack, refer to the illustration in the next column.

5. Position the jack at the jacking point closest to the flat tire so that the jack base is vertically below the jacking point and the entire surface of the head of the jack will move into the square recess of the jacking point, refer to the illustration detail, when the jack is cranked.
6. Jack the vehicle up until the wheel you are changing is raised from the ground.
7. Unscrew the lug bolts and remove the wheel.
8. Remove accumulations of mud or dirt from the mounting surfaces of the wheel and hub. Clean the lug bolts.
9. Move the spare wheel into position. Secure the wheel by turning at least two lug bolts into opposite bolt holes.
10. Screw in the remaining lug bolts. Tighten all the bolts securely in a diagonal pattern.
11. Lower the jack and remove it from beneath the vehicle.
12. Tighten the lug bolts in a diagonal pattern.
13. Check and correct the tire inflation pressure at the earliest opportunity. After mounting the spare wheel or correcting the inflation pressure, reinitialize the Flat Tire Monitor, refer to page 99.

Protect valve stems and valves from dirt using screw-on valve stem caps. Dirt in the valve stems frequently leads to slow leaks.

The vehicle jack is designed for changing wheels only. Do not attempt to raise another vehicle model with it or to raise any load of any kind. To do so could cause accidents and personal injury.
To ensure safety, always have the lug bolts checked with a calibrated torque wrench as soon as possible to ensure that they are tightened to the specified torque. The tightening torque is 101 lb ft/140 Nm.◀

Store the wheel and the tools in the order opposite that for removal.

Before removing the support rod, be sure that the tailgate is held down firmly. If you fail to do so, it could spring upward abruptly and cause personal injury and vehicle damage.
After you remove the rod, close the tailgate carefully. Continue to hold it firmly until it is completely closed.◀

If light-alloy wheels other than Genuine BMW light-alloy wheels have been mounted, it may be necessary to use different lug bolts for those wheels.

Replace the defective tire as soon as possible and have the new wheel/tire balanced.

Driving with compact wheel

Drive reservedly and do not exceed a maximum speed of 50 mph/80 km/h.

Altered handling characteristics, such as reduced track stability during braking, longer braking distances and altered self-steering properties at the driving limit can occur. These properties are more apparent in conjunction with winter tires.

Online Edition for Part No. 01 41 0 159 867 - © 07/05 BMW AG

Changing a wheel

Only one compact wheel may be mounted. Wheels and tires of the original size should be mounted again as soon as possible.◀

Driving with spare wheel*

Do not exceed a speed of 130 mph/210 km/h, otherwise tire damage could lead to accidents.◀

With certain wheel-and-tire combinations the size of the spare wheel differs from that of the other wheels. To restore the original state, the normal wheel should be remounted as soon as possible.◀

Vehicle battery

Battery posts, terminals and related accessories contain lead and lead compounds. Wash hands after handling.◀

Battery care

The battery is maintenance-free, that is, the original electrolyte will normally last for the service life of the battery under moderate climatic conditions. Your BMW Sports Activity Vehicle center will be glad to advise in all matters concerning the battery.

Charging battery

Only charge the battery in the vehicle via the terminals in the engine compartment with the engine off. For correct connections, refer to Jump starting on page 174.

Disposal

Following replacement, have old batteries disposed of by your BMW Sports Activity Vehicle center or turn them over to a recycling center. Maintain the battery in an upright position for transport and storage. Always restrain the battery to prevent it from tipping over during transport.◀

Power failure

Following a temporary power failure, e.g. in the case of a dead battery, some equipment is subject to restricted use and must be reinitialized. Individual settings are also lost and must be updated again:

- ▷ Seat, mirror and steering wheel memory
  The positions must be stored again, refer to page 50
- ▷ Time and date
  Have to be updated again, refer to page 82
- ▷ Activation time for parked car ventilation
  Has to be updated again, refer to page 84.

In glove compartment

Open the fuse cover in the glove compartment by the indentations on the right and left.

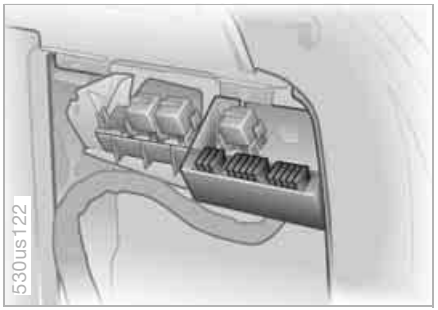

In cargo area

Open the right cover by pulling the handle.

Never attempt to repair a blown fuse, and do not replace a defective fuse with a substitute of another color or amperage rating, as this could lead to a circuit overload, ultimately resulting in a fire in the vehicle.◀

Online Edition for Part No. 01 41 0 159 867 - © 07/05 BMW AG

The Roadside Assistance of the BMW Group offers you assistance in the event of a breakdown around the clock, also on weekends and public holidays.

The phone numbers of the Roadside Assistance control center in your home country can be found in the BMW Dealer Directory.

In the case of vehicles with the corresponding equipment, you can use buttons in the headliner to contact Roadside Assistance or initiate an emergency call.

When the emergency call is initiated, a telephone connection with the BMW Assist response center is established.

In vehicles with activated BMW Assist, if the current position of your vehicle can be determined, it is transmitted to the BMW Assist response center.

The requirements for initiating an emergency call or contacting Roadside Assistance:

▷ Ignition key in position 1
▷ The car phone is logged on to a mobile telephone network
▷ The emergency call system is operable.

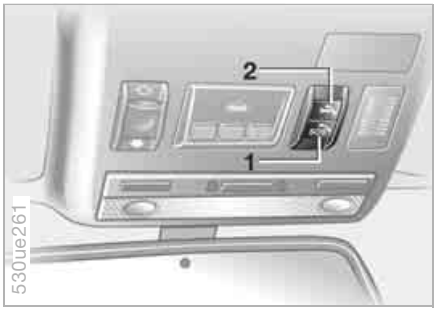

1 Initiating an emergency call
2 Establishing contact to Roadside Assistance

Initiating an emergency call*

Press button 1 for at least 2 seconds. The LED in the button lights up. As soon as the voice connection to the BMW Assist response center has been established, the LED flashes. If the LED flashes, but you are unable to hear the response center, you can still be heard by the response center.

⚠ For technical reasons, the emergency call cannot be guaranteed under the most unfavorable conditions.◀

Under certain conditions, an emergency call is initiated automatically immediately after a severe accident. The automatic emergency call is not affected by the button being pressed.

Roadside Assistance*

Press button 2 for at least 2 seconds.

With the BMW Assist activated, the current position of your vehicle will be transmitted in the specific country.

Jump starting

When your battery is discharged, you can use two jumper cables to start your vehicle with power from the battery in a second vehicle. You can also use the same method to help start another vehicle. Use only jumper cables with fully-insulated clamp handles.

To avoid the risk of potentially fatal injury, always avoid all contact with electrical components while the engine is running. Carefully observe the following instructions to avoid personal injury and/or damage to one or both vehicles.◀

Preparing

1. Check whether the battery of the other vehicle has a voltage of 12 Volts and approximately the same capacitance in Ah. This information can be found on the battery.
2. Switch off the engine of the support vehicle.
3. Switch off any electrical systems and components in both vehicles.

Ensure that no contact exists between the bodywork on the two vehicles, otherwise there is a danger of short circuits.◀

Connecting jumper cables

To avoid personal injury from sparks, always follow this sequence when connecting jumper cables.◀

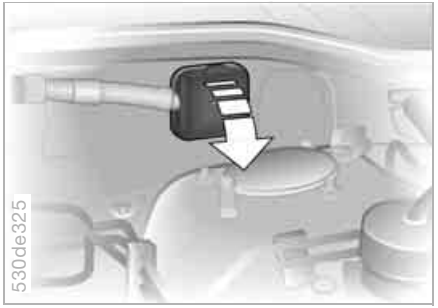

On your BMW the so-called jump-start connection point in the engine compartment acts as the battery positive terminal, also refer to the engine compartment overview on page 151. The cover cap is marked with +.

1. Fold up the cap of the BMW jump-start connection point, refer to arrow.
2. Attach one end of the positive/+ jumper cable to the positive terminal of the battery or a jump-start connection point of the vehicle providing assistance.
3. Connect the second terminal clamp of the positive/+ jumper cable to the positive terminal of the battery or a jump-start connection point of the vehicle to be started.

Online Edition for Part No. 01 41 0 159 867 - © 07/05 BMW AG

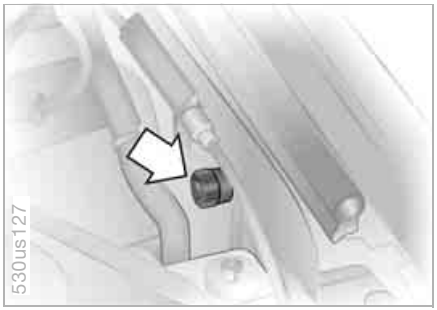

Your BMW is equipped with a special nut on the left side panel as a body ground or negative terminal, refer to arrow in illustration.

4. Attach one end of the negative/– jumper cable to the negative terminal of the battery or to an engine or body ground of the vehicle providing assistance.
5. Connect the second terminal clamp of the negative/– jumper cable to the negative terminal of the battery or to the engine or body ground of the vehicle to be started.

Starting engine

1. Start the engine on the support vehicle and allow it to run for several minutes at a fast idle.
2. Start the engine on the other vehicle in the usual way.
   If the first start attempt is not successful, wait a few minutes before another attempt in order to allow the discharged battery to recharge.
3. Let the engines run for a few minutes.
4. Disconnect the jumper cables by reversing the connection sequence.

Depending on the cause of the malfunction, have the battery recharged by your BMW Sports Activity Vehicle center.

Never use spray fluids to start the engine.◀

Using tow fitting

The screw-in tow fitting is stored beneath the cargo floor cover. Carry it with you at all times. It can be screwed in at the front or rear of the vehicle.

Only use the tow fitting that comes with the vehicle and screw it in as far as it will go. Use the tow fitting for towing only on the roadway. Avoid lateral loading of the tow fitting, e.g. do not lift the vehicle by the tow fitting. Otherwise damage to the tow fitting and the vehicle can occur.◀

Online Edition for Part No. 01 41 0 159 867 - © 07/05 BMW AG

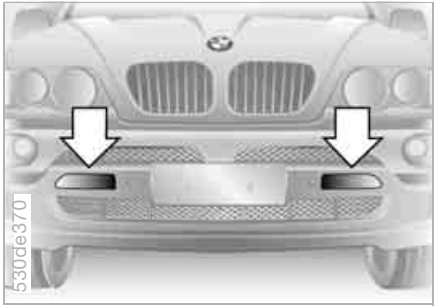

Access to screw thread

Front:
Use a screwdriver to press the right or left cover out, refer to arrows.

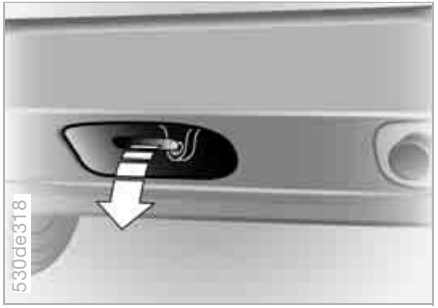

Rear:
Pull the cover off.

Being towed

Make sure that the ignition key is in position 1, otherwise the steering lock could engage and it would not be possible to steer the vehicle. When the engine is stopped, there is no power assist. This requires increased braking and steering effort.◀

Switch on the hazard warning flashers depending on the local regulations.
If the electrical system fails, mark the vehicle to be towed, e.g. with a sign or warning triangle in the rear window.

Do not exceed a towing speed of 30 mph/50 km/h and a towing distance of 95 miles/150 km, otherwise the automatic transmission may be damaged.◀

Manual transmission:
Gearshift lever in idle position

Automatic transmission:
Selector lever in N.

Towing methods

In some countries, towing with a tow bar or rope on public roads is not permitted.
Familiarize yourself with all regulations on towing in the respective country.

With tow bar:

The towing vehicle may not be lighter than the vehicle to be towed, otherwise handling will be uncontrollable.◀

The tow fitting of both vehicles should be on the same side. If an angled position of the bar cannot be avoided, be aware of the following:

Online Edition for Part No. 01 41 0 159 867 - © 07/05 BMW AG

▷ The freedom of movement is restricted during cornering
▷ The angled position of the tow bar creates lateral forces.

⚠ Only attach the tow bar to the tow fittings, as attachment to other vehicle parts can lead to damage.◀

With tow-rope:
When starting off in the towing vehicle, make sure that the tow-rope is taut.

⚠ Use nylon ropes or nylon straps for towing, and avoid all excessively sudden jerking movements. Only attach tow ropes to the tow fittings, as attachment to other vehicle parts can lead to damage.◀

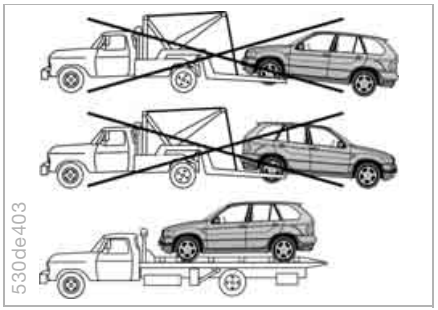

With tow truck:

⚠ Do not tow the X5 with the front or rear axle raised individually, otherwise the wheels may lock and the transfer case may be damaged.◀

The X5 may only be transported on a flat bed.

Tow-starting

▷ Do not tow-start vehicles with an automatic transmission.
For information on jump starting, refer to page 174.◀

Only tow-start vehicles with a catalytic converter with the engine cold. It is better to jump start the engine, refer to page 174.

1. Switch on the hazard warning flashers and observe local regulations.
2. Turn the ignition key to position 2.
3. Shift into 3rd gear.
4. Tow-start with the clutch completely depressed and slowly release the clutch. After the engine starts, immediately depress the clutch again completely.
5. Stop at a suitable location, remove the tow bar or rope and switch off the hazard warning flashers.
6. Have the vehicle checked.

▷ Do not activate the HDC Hill Descent Control during tow-starting, refer to page 94.◀

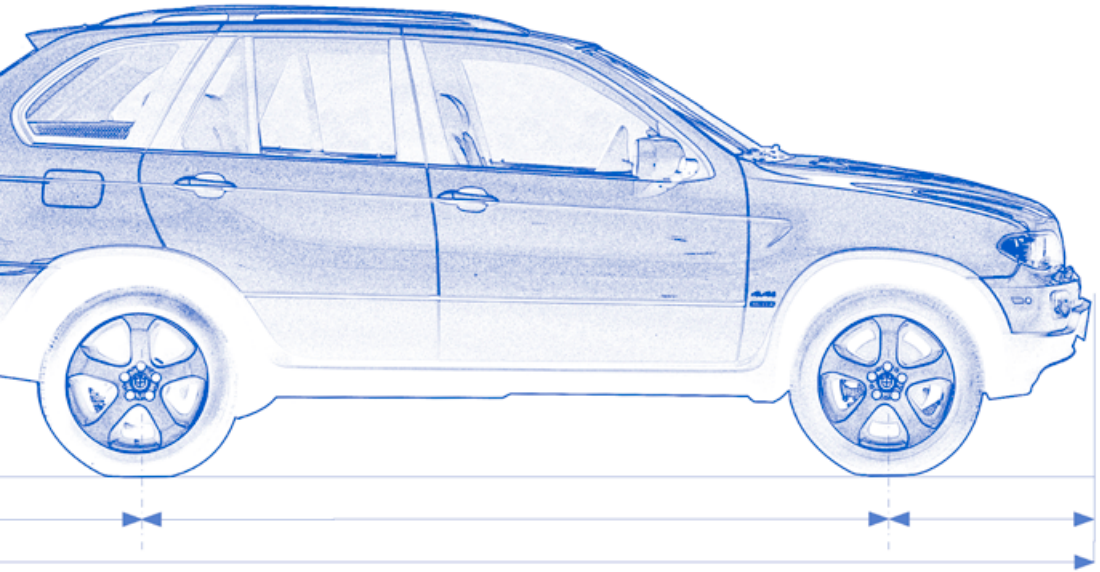

Online Edition for Part No. 01 41 0 159 867 - © 07/05 BMW AG

Overview

Controls and features

Operation, maintenance

Owner service procedures

Technical data

Index

Engine specifications

		X5 3.0i	X5 4.4i	X5 4.8is
Displacement	cu in/cm^3	181.8/2,979	268.4/4,398	292.9/4,799
Number of cylinders		6	8	8
Maximum output	hp	225	315	355
at engine speed	rpm	5,900	5,400	6,200
Maximum torque	lb ft/Nm	214/290	324/440	369/500
at engine speed	rpm	3,500	3,600	3,500

An engine performance test is authorized only on an appropriate chassis dynamometer.

Online Edition for Part No. 01 41 0 159 867 - © 07/05 BMW AG

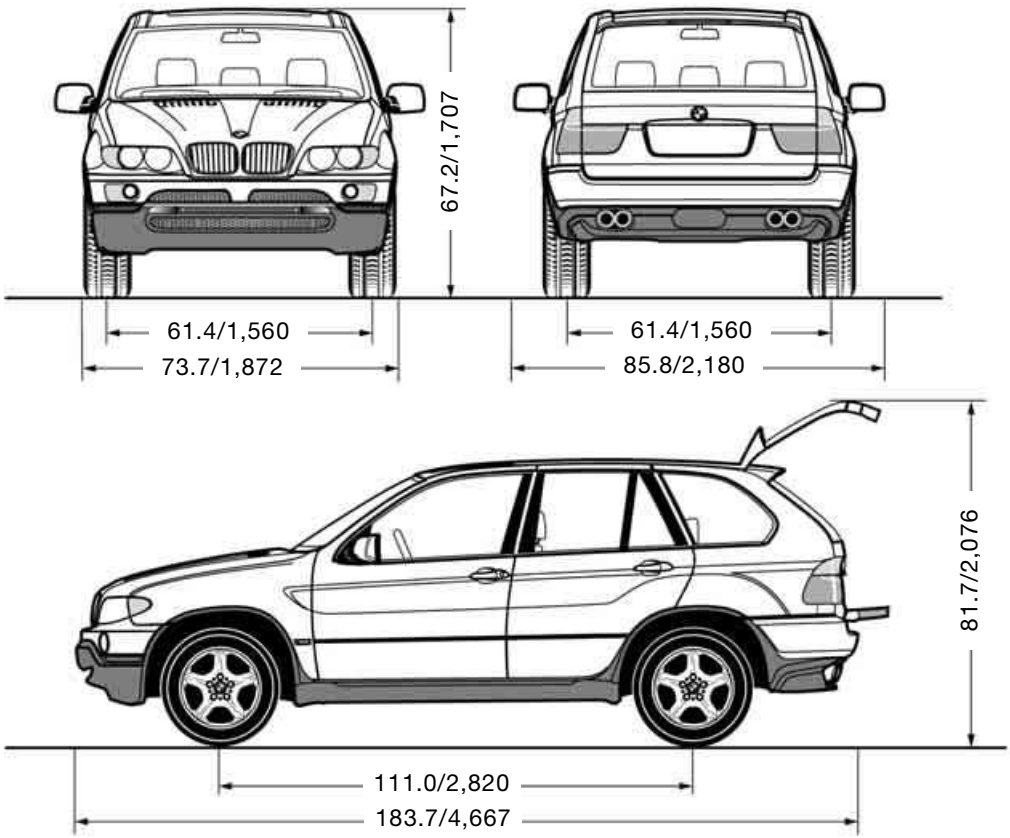

530de368

All dimensions are given in inches/mm. Height: with self-leveling suspension 67.2/1,707; without self-leveling suspension 67.5/1,715; X5 4.8is 66.4-67.8/1,668-1,723. Height with roof-mounted luggage rack: with self-leveling suspension 68.5/1,740; without self-leveling suspension 68.9/1,750. Track width: X5 3.0i 62.0/1,576; X5 4.8is front 61.7/1,566, rear 62.8/1,596. Min. turning circle dia.: 39.7 ft/12.1 meters.

Online Edition for Part No. 01 41 0 159 867 - © 07/05 BMW AG

Weights

		X5 3.0i	X5 4.4i	X5 4.8is
Curb weight				
with manual transmission	lbs./kg	4,652/2,110	–	–
with automatic transmission	lbs./kg	4,696/2,130	4,927/2,235	5,016/2,275
Approved gross vehicle weight				
with manual transmission	lbs./kg	6,008/2,725	–	–
with automatic transmission	lbs./kg	6,008/2,725	6,008/2,725	6,008/2,725
Load				
with manual transmission	lbs./kg	1,356/615	–	–
with automatic transmission	lbs./kg	1,312/595	1,080/490	992/450
Approved front axle load	lbs./kg	2,712/1,230	2,789/1,265	2,789/1,265
Approved rear axle load	lbs./kg	3,307/1,500	3,307/1,500	3,307/1,500
Approved roof load capacity	lbs./kg		220/100	
Never exceed either the approved axle loads or the gross vehicle weight.				
Cargo area capacity	cu ft/l		16.4/465, according to DIN 69.01/1,955, according to SAE	

Online Edition for Part No. 01 41 0 159 867 - © 07/05 BMW AG

			Notes
Fuel tank including a reserve of: X5 3.0i X5 4.4i, 4.8is	gal./liters gal./liters gal./liters	approx. 24.6/approx. 93 approx. 2.1/approx. 8 approx. 2.6/approx. 10	Fuel specification: page 26
Windshield washer system with headlamp washer system	quarts/liters	approx. 8.2/approx. 7.8	For details: page 152
Engine with oil filter change X5 3.0i X5 4.4i, 4.8is	 quarts/liters quarts/liters	 8.0/7.5 8.5/8.0	BMW High Performance Synthetic Oil. For details: page 153

Online Edition for Part No. 01 41 0 159 867 - © 07/05 BMW AG

Overview

Controls and features

Operation, maintenance

Owner service procedures

Technical data

Index

Everything from A to Z

A
Ability to climb, refer to Driving on poor roads 138
ABS Antilock Brake System 91
warning lamp 20
Accessories, refer to For your own safety 9
Accident, refer to Emergency call 173
Roadside Assistance 173
Activated-charcoal filter 112
Adaptive Head Light 101
Adjusting cooling capacity of rear climate control 112
Adjusting seats 44
electric 46
electric comfort seat 46
mechanical 45
mechanical sports seat 45
Air, drying, refer to Air conditioning 105, 110
Airbags 55
sitting safely 43
warning lamp 21
Air circulation, refer to Recirculated-air mode 105
Air conditioner 104
Air conditioning
air conditioner 105
automatic climate control 110
Air distribution
air conditioner 105
automatic climate control 109
individual 109
Airing, refer to Ventilation 106, 111
Air outlets, refer to Ventilation 106, 111
Air pressure, refer to Tire inflation pressure 141
Air recirculation, refer to AUC Automatic recirculated-air control 110
Air supply
air conditioner 105
automatic climate control 109
rear climate control 112
Air vents, refer to Ventilation 104, 107
Alarm system 38
avoiding unintentional alarms 39
All-season tires, refer to Special features of winter tires 149
All-wheel drive, refer to xDrive 94
Antenna, refer to Caring for your vehicle brochure
Antifreeze
coolant 154
washer fluid 152
Antilock Brake System
ABS 91
warning lamp 20
Anti-theft alarm system, refer to Alarm system 38
Anti-theft system 30
Anti-trapping
mechanism 40, 42
panorama glass roof 42
power windows 40
Armrest, refer to Storage compartments 119
Artificial leather, refer to Caring for your vehicle brochure
Artificial wood trim, refer to Caring for your vehicle brochure
Ashtray 121
front 121
rear 121
AUC Automatic recirculated-air control 110
Automatic
air distribution 109
air supply 109
cruise control 71
headlamp control 100
recirculated-air control AUC 110
steering wheel adjustment 53
Automatic car wash, refer to Caring for your vehicle brochure
Automatic climate control 107
Automatic cruise control 71
Automatic curb monitor 51
Automatic headlamp control 100
Automatic rear window washer 71
Automatic Soft Close function, liftgate 36
Automatic speed reduction for descents, refer to HDC Hill Descent Control 94

Automatic transmission with Steptronic 65
interlock 62
selector lever interlock 66
shiftlock 66
towing 176
tow-starting 176
warning lamp 20, 21
AUTO program, refer to Automatic air distribution and supply 109
Average fuel consumption 80, 87
Average speed 80, 88
Avoiding alarms 39
Axle loads, refer to Weights 182

B

Backrest contour, refer to Lumbar support 46
Backrests, refer to Adjusting seats 45, 46
Backup lamps 65
replacing bulbs 163
Bandages, refer to First-aid kit 24
Bar, towing 176
Battery 171
disposal 171
indicator lamp 19
jump starting 174
power failure 171
remote control 30
Belts, refer to Safety belts 49
Beverage can holders, refer to Cup holders 120
Beverage holder, refer to Cup holders 120
Blower
air conditioner 105
automatic climate control 109
refer to Air supply 105, 109
BMW High Performance Synthetic Oil 153
BMW Maintenance System 156
Bottle holder, refer to Cup holders 120
Brake fluid 155
adding 155
level 155
replacing 155
warning lamp 19
Brake force display 98
Brake hydraulic system 140
warning lamp 19, 20
Brake lamps, replacing bulbs 163
Brake lights, refer to Brake lamps 163
Brake pads 140
breaking-in 136
warning lamp 19, 21
Brake rotors
brake system 140
breaking-in 136
Brakes 140
ABS 91
brake fluid 155
brake pads 140
breaking-in 136
handbrake 64
indicator/warning lamp 19, 20
Brake system
brake fluid 155
brake fluid level 140, 155
brake pads 140
breaking-in 136
disk brakes 140
warning lamp 19
Brake wear warning
warning lamp 19, 21
Breakdown, Flat Tire Monitor 98
Breakdown assistance, refer to Roadside Assistance 173
Breaking-in 136
Break wear warning, refer to Brake pads 140
Buttons on steering wheel 23

C

California Proposition 65 Warning 9
Calling, refer to telephone Owner's Manual
Can holders, refer to Cup holders 120
Capacities 183
Car care, refer to Caring for your vehicle brochure
Car-care products, refer to Caring for your vehicle brochure
Care, refer to Caring for your vehicle brochure
Care of paintwork, refer to Caring for your vehicle brochure

Everything from A to Z

Cargo area 124
capacity 182
cover, refer to Roll-up cover 125
emergency operation, refer to Unlocking manually 35, 36
enlarging 124
floor cover 127
lamps 103
lid, refer to Liftgate/ tailgate 35, 36
opening, remote control 31
opening/closing, refer to Liftgate 35
opening/closing, refer to Tailgate 36
opening from inside 35
opening from outside 35
Cargo-area partition net 125
Cargo bay, refer to Cargo area 124
Cargo floor, pull-out 128
Cargo loading 130
Caring for leather, refer to Caring for your vehicle brochure
Caring for the carpet, refer to Caring for your vehicle brochure
Car keys, refer to Keys 30
Car phone, refer to separate Owner's Manual
Car phone provision 116
Car radio, refer to Owner's Manual for Radio/Onboard Computer
Car wash, refer to Caring for your vehicle brochure
Cassette operation, refer to Owner's Manual for Radio/ Onboard Computer
CD changer, refer to Owner's Manual for Radio/Onboard Computer
CD operation, refer to Owner's Manual for Radio/ Onboard Computer
Center armrest, refer to Storage compartments 119
Center brake lamp, replacing bulbs 164
Central locking system 30
interior 34
Changes, technical, refer to For your own safety 9
Changing a wheel 165
Changing gears with automatic transmission with Steptronic 66
Changing tires 145
Changing wheels
compact wheel 167
spare wheel 167
Charge-current indicator lamp 19
Charging battery 171
CHECK button 77
Check Control 77
Child's seat, refer to Child-restraint systems 57
Child-restraint fixing system LATCH 59
Child-restraint systems 57
Child-safety locks 60
Chocks 166
Chrome parts, care, refer to Caring for your vehicle brochure
Cigarette lighter 121, 122
Cigarette lighter socket, refer to Socket 121
Circulation of air, refer to Recirculated-air mode 105, 110
Cleaning, vehicle, refer to Caring for your vehicle brochure
Cleaning rear window 71
Climate control in the rear passenger area 111
Clock 82
12 or 24-hour mode 82
hour signal 83
setting 82
setting, also refer to Owner's Manual for Radio/ Onboard Computer
setting time and date 82
Closing
from inside 34
from outside 31
Clothes hooks 120
Clutch 136
breaking-in 136
Cockpit 14
Code
activating 88
deactivating 89
establishing 88
Cold starting, refer to Starting engine 63
Combination of wheels/ tires 148
Comfort seat 46
Comfort starting, refer to Starting engine 63
Compact Disc operation, refer to Owner's Manual for Radio/Onboard Computer
Compact wheel, changing wheels 167

Compartments, refer to Storage compartments 119
Compass interior rearview mirror 117
Computer 79, 85
also refer to Owner's Manual for Onboard Computer
Condensation, refer to Air conditioning 105, 110
Connecting vacuum cleaner, refer to Sockets 121, 128
Consumption, refer to Average fuel consumption 80
Fuel consumption 87
Consumption display, refer to Energy control 74
Consumption indicator, refer to Fuel gauge 75
Contents 4
Controls, refer to Cockpit 14
Convenience opening mode
panorama glass roof 31
windows 31
Convenience operation
from outside 33
panorama glass roof 33
windows 33
Coolant 154
level 154
temperature gauge 76
warning lamp 76
Coolant temperature 76
Coolant temperature gauge 76
Cooling, maximum 110
Cooling, refer to
Air conditioning 105, 110
Temperature 105, 109
Copyright 4
Cornering light, refer to Adaptive Head Light 101
Correct tires
wheel/tire replacement 148
winter tires 149
Courtesy illumination, refer to Courtesy lighting 103
Courtesy lighting 103
Cruise control 71
buttons on steering wheel 23
indicator lamp 22
Cruising range 80, 87
Cup holders 120
Curb weight, refer to Weights 182
Current consumption, refer to Energy control 74
Cylinders, refer to Engine data 180

D

Dashboard, refer to Cockpit 14
Dashboard lighting, refer to Instrument lighting 102
Data, technical 180
dimensions 181
engine 180
filling capacities 183
weights 182
Date
also refer to Owner's Manual for Onboard Computer
changing 82
displaying 82
Daytime driving lamps 100
DBC Dynamic Brake Control 91
indicator lamp 21
Deactivating the alarm in an emergency 89
Defective lamp 161
Defrosting windows 106, 109
air conditioner 106
automatic climate control 109
Defrosting windows and removing condensation
air conditioner 106
automatic climate control 109
Defrost position, refer to Defrosting windows 106, 109
Digital clock 82
also refer to Owner's Manual for Onboard Computer
Digital compass 117
Dimensions 181
Dimming feature, interior mirror 138
Dipstick, engine oil 152
Directional indicators, refer to Turn signals 68
Disk brakes 140
Displacement, refer to Engine specifications 180
Display, refer to Instrument cluster 15, 17, 18
Display lighting, refer to Instrument lighting 102
Disposal, vehicle battery 171
Distance to destination 86
Distance warning, refer to PDC Park Distance Control 90

Everything from A to Z

Divided rear seat backrest, refer to Folding rear seat back 124
Door keys 30
Door lock 33
DOT Quality Grades 145
Draft-free ventilation 106, 111
Driving lamps, refer to Parking lamps/low beams 100
Driving notes
  breaking-in 136
  driving hints 137, 138
Driving on poor roads 138
Driving stability control 92
Driving tips, refer to Driving notes 137
Driving your X5 138
Dry air, refer to Air conditioning 105, 110
DSC Dynamic Stability Control 92
  warning lamp 22
DVD changer, refer to Owner's Manual for Radio/ Onboard Computer
Dynamic Brake Control DBC 91
  indicator lamp 21
Dynamic Stability Control DSC 92
  warning lamp 22

E

EBV Electronic brake-force distribution 91
Electrical defect
  liftgate 35
  tailgate 36
Electrical malfunction
  automatic transmission with Steptronic 67
  door lock 33
  driver's door 33
  fuel filler door 24
  panorama glass roof 42
Electric steering wheel adjustment 52
Electronic brake-force distribution EBV 91
Electronic Stability Program ESP, refer to DSC Dynamic Stability Control 92
Emergency call 173
Emergency operation, refer to Manual operation
  driver's door 33
  fuel filler door 24
  liftgate 35
  panorama glass roof 42
  tailgate 36
Emergency Service, refer to Roadside Assistance 173
Energy-conscious driving, refer to Energy control 74
Energy control 74
Engine
  breaking-in 136
  data 180
  electronic circuitry 22
  overheated, refer to Coolant temperature gauge 76
  speed 74
  starting 62
  switching off 63
Engine compartment 151
Engine coolant 154
Engine oil 152
  additives, refer to Specified engine oils 153
  filling capacity 183
  indicator/warning lamp 19
  specified engine oils 153
Engine oil level 152
  indicator/warning lamp 21
Engine oil pressure, indicator/warning lamp 19
Engine oil temperature gauge 75
Engine output, refer to Engine specifications 180
Engine overheating, refer to Coolant temperature gauge 76
Engine specifications 180
Engine speed, refer to Engine specifications 180
Environmentally friendly driving, refer to Energy control 74
ESP Electronic Stability Program, refer to DSC Dynamic Stability Control 92
Event Data Recorders 157
Exhaust system 137
Extended immobilizer function 88
Exterior mirrors 53
  automatic dimming feature 138
  folding in and out 54
External air, automatic climate control 110

F

Failure messages, refer to Check Control 77
Failure of a current consumer 172
False alarms, refer to Avoiding unintentional alarms 39

Fastening seat belts
refer to Safety belts 49
Fasten safety belts
warning lamp 21, 49
Fault displays, refer to Check Control 77
Filter, refer to
Microfilter 106
Microfilter/activated-charcoal filter 112
First aid, refer to First-aid kit 24
First-aid kit 24
Flashlight 119
Flat, compact wheel 167
Flat tire 165
compact wheel 167
Flat Tire Monitor 98
refer to Changing a wheel 165
refer to Tire inflation pressure 141
spare wheel 167
Flat Tire Monitor 98
false alarms 98
initializing system 99
limits of system 98
show chains 149
warning lamp 99
Flooding, refer to Driving through water 138
Floor mats, refer to Caring for your vehicle brochure
Fluid level, indicator lamp 21
Fog lamps, indicator lamp 22
Folding floor cover up 128
Folding rear backrest 124
Folding rear seat back 124
Footbrake, refer to General driving notes 137
Footwell lamps 103
For information on breaking in the differential, refer to Engine and differential 136
Four-wheel drive system, refer to xDrive 94
Front airbags 55
Front fog lamps 102
replacing bulbs 163
Fuel
average consumption 80, 87
display 75
quality 26
volume, refer to Capacities 183
Fuel display, refer to Fuel gauge 75
Fuel filler door 24
manual operation 24
Fuel gauge 75
Fuel-saving driving, refer to Energy control 74
Fuel tank capacity, refer to Capacities 183
Full preparation package mobile phone, refer to separate Owner's Manual
Fuses 172

G

Garage-door opener, refer to Integrated universal remote control 114
Gasoline, refer to Fuel quality 26
Gasoline display, refer to Fuel gauge 75
Gear display 65
Gearshift lever, manual transmission 64
General driving notes 137
Glove box, refer to Glove compartment 119
Glove compartment 119
Grills, refer to Ventilation 106, 111
Gross weight, refer to Weights 182
Ground clearance 139

H

Handbrake 64
indicator lamp 19, 21
Hand lamp, refer to Rechargeable flashlight 119
Hands-free microphone, refer to Telephone 116
Hands-free system 116
refer to Microphone 116
Hazard warning flashers 14
HDC Hill Descent Control 94
Head airbags 55
Headlamp control, automatic 100
Headlamp cover, care, refer to Caring for your vehicle brochure
Headlamp flasher 68
indicator lamp 22
Headlamps
care, refer to Caring for your vehicle brochure
replacing bulbs 161
Headlamp washer
reservoir 152
volume, refer to Filling capacities 183
Headlamp washer system
headlamp washing 70
washer fluid 152

Head restraints 47
adjusting 47
installing in front 48
removing and installing in rear 48
removing in front 48
sitting safely 43
Heated mirrors 54
Heated rear window
air conditioner 105
automatic climate control 110
Heated seats 52
Heated steering wheel 53
Heater
rear window 105, 110
steering wheel 53
Heating
exterior mirror 54
residual heat utilization 110
seats 52
Heating and ventilation 104, 107
Heating while stationary 110
Heavy cargo, refer to Cargo loading 131
Heavy-duty cargo straps, refer to Cargo loading 131
Height, refer to Dimensions 181
Height adjustment
seats 45, 46
steering wheel 52
High beams 101
headlamp flasher 68
indicator lamp 22
replacing bulbs 162
High temperatures 137
Hill Descent Control HDC 94
Hills 138, 140
Holder for cups 120
Hood 150
Horn 14
Hotel function 30
Hot exhaust system 137
Hydraulic brake assistant, refer to DBC 91
Hydraulic system, brakes 19
Hydroplaning 137, 147

I

Ice, refer to Outside temperature warning 73
Identification, tire 145
Ignition 62
Ignition key 30
Ignition key positions, refer to Ignition lock 62
Ignition lock 62
Immobilizer function 88
Imprint 4
Independent ventilation, refer to Parked car ventilation 113
Indicating elements 15, 17, 18
Indicator/warning lamp
airbags 57
alarm system 38
automatic transmission with Steptronic 67
brakes 155
coolant temperature 76
DSC 92
engine temperature 76
fasten safety belts 49
Flat Tire Monitor 99
front fog lamps 102
reserve 75
self-leveling suspension 95
Indicator and warning lamps, overview 19
Indicator lighting, refer to Instrument lighting 102
Individual air distribution 109
Individual settings, refer to Vehicle Memory, Key Memory 61
Inflation pressure, tires, refer to Tire inflation pressure 141
Initializing, refer to Power loss 42
INSPECTION 76
Instrument cluster 15, 17, 18
refer to Cockpit 14
Instrument lighting 102
Instrument panel 14
Integrated universal remote control 114
Interface socket for Onboard Diagnostics 157
Interior lamps 103
remote control 31
Interior mirror, automatic dimming feature 138
Interior motion sensor 39
switching off 31, 39
Interior rearview mirror 54
compass 117
Interlock, refer to Steering lock engaged 62
Intermittent operation of wipers 69, 71
Interval Display, Service 76

J

Jacking points for vehicle jack 170
Jumpering, refer to Jump starting 174
Jump starting 174

K
Key Memory 61
Keys 30
key-related settings, refer to Vehicle Memory, Key Memory 61
Kick-down 66

L
Lamps, refer to Parking lamps/low beams 100
Lamps and bulbs 161
Lashing eyes, refer to Securing load 131
LATCH child-restraint fixing system 59
Length, refer to Dimensions 181
License plate lamp, replacing bulbs 164
Liftgate 35
emergency operation, refer to Unlocking manually 35
opening, remote control 31
Liftgate/tailgate
opening from inside 35
opening from the outside 35
unlocking manually 35, 36
Light-alloy wheels, care, refer to Caring for your vehicle brochure
Light-emitting diodes LEDs 165
Lighter 121, 122
Lighting of instruments 102
Lights on warning 100
Light switch 100
Limit 85
Limit speed, refer to Speed limit 85
Load, refer to Cargo loading 130
Loading, securing load 131
Lock buttons, doors, refer to Locking 34
Locking
from inside 34
from outside 31
Locking, vehicle
from inside 34
from outside 31
Locking and unlocking doors
from inside 34
from outside 31
Low beams 100
automatic 100
replacing bulbs 161
Lower back support, refer to Lumbar support 46
Low-fuel indicator lamp, refer to Fuel gauge 75
Lug bolts 169
torque 170
Luggage compartment
capacity 182
opening from inside 35
Luggage compartment, refer to Cargo area 124
Luggage compartment cover, refer to Roll-up cover 125
Luggage compartment lamps, refer to Cargo area lamps 103
Luggage compartment lid
refer to Liftgate 35
refer to Tailgate 36
Luggage net, refer to Partition net 125
Luggage rack, refer to Roof-mounted luggage rack 132
Luggage straps 37
Lumbar support 46

M
M+S tires, refer to Winter tires 149
Maintenance, refer to Service Interval Display 76
Maintenance system 156
Malfunction
automatic transmission with Steptronic 67
door lock 33
fuel filler door 24
liftgate 35
panorama glass roof 42
tailgate 36
Manual operation
door lock 33
driver's door 33
fuel filler door 24
liftgate 35
panorama glass roof 42
tailgate 36
Manual transmission 64
Master key 30
with remote control 30
Maximum cooling 110
Maximum roof weight 182
Maximum speed with winter tires 149
Measurements, refer to Dimensions 181
Mechanical key, refer to Door and ignition key 30
Mechanical seats 45
Memo 83

Memory, refer to
Seat, mirror and steering wheel memory 50
Vehicle Memory, Key Memory 61
Microfilter
air conditioner 106
automatic climate control 112
Microphone for telephone, refer to Car phone 116
MID Multi-Information Display
displays and controls 81
information display 81
Mirror dimming feature 138
Mirrors 53
automatic curb monitor 51
mirror heating 54
mirror memory, refer to Seat, mirror and steering wheel memory 50
Mobile communications devices in vehicle 137
Mobile phone, refer to separate Owner's Manual
Monitoring pressure of tires, refer to Flat Tire Monitor 98
Multi-function steering wheel, refer to Buttons on steering wheel 23
Multifunction switch
turn signals/headlamp flasher 68
washer/wiper system 69
Multi-Information Display MID 81

N

Navigation system, refer to separate Owner's Manual
Neck support, refer to Head restraints 47
Nozzles, refer to Ventilation 106, 111
Nylon rope, refer to Tow-starting and towing 177

O

OBD interface socket 157
Odometer 73
Oil
additives, refer to Specified engine oils 153
consumption 152
consumption, refer to Engine oil, checking 152
dipstick 152
filling capacity 183
level 152
refilling, refer to Engine oil, adding 153
specified engine oils 153
Oil change interval, refer to Service and Warranty Information Booklet, US models or Warranty and Service Guide Booklet, Canadian models
Oil consumption 152
Oil level 152
checking 152
Oil pressure, indicator/ warning lamp 19
OILSERVICE 76
Oil temperature 75
Old batteries, refer to Disposal 171
Onboard tool kit 160
Opening and closing
from inside 34
from outside 31
using the door lock 33
using the remote control 31
Output, refer to Engine specifications 180
Outside air, air conditioner 105
Outside temperature display 73
changing unit of measure 73, 80
on onboard computer 80

P

Package shelf, refer to Roll-up cover 125
Panorama glass roof 41
automatic opening and closing 41
closing in the event of an electrical malfunction 42
comfort operation 33
comfort position 42
initializing 42
power failure 42
remote control 31
Park Distance Control PDC 90
Parked car ventilation 113
activating/deactivating
switch-on times 84
also refer to Owner's Manual for Onboard Computer
entering switch-on times 84
switching on and off directly 84
Parking, vehicle 63
Parking aid, refer to PDC Park Distance Control 90
Parking assistant, refer to PDC Park Distance Control 90

Online Edition for Part No. 01 41 0 159 867 - © 07/05 BMW AG

Parking brake, refer to Handbrake 64
Parking lamps 100
replacing bulbs 162
Parking lamps/low beams 100
Parts and accessories, refer to For your own safety 9
Passenger-side mirror tilt function 51
Pathway lighting 100
PDC Park Distance Control 90
Permissible axle load, refer to Weights 182
Permissible gross weight, refer to Weights 182
Plastic, care, refer to Caring for your vehicle brochure
Pollen, refer to
Microfilter 106
Microfilter/activated-charcoal filter 112
Power electric seat 46
Power failure 171
Power rear seat backrest 48
Power windows 39
safety switch 40
Pressure, tires 141
Pressure monitoring, tires 98
Flat Tire Monitor 98
Programming settings, refer to Vehicle Memory, Key Memory 61
Protective function, panorama glass roof 42
Pull-out cargo floor 128

R

Radio, refer to Owner's Manual for Radio/Onboard Computer
Radio-control key, refer to Master key with remote control 30
Radio navigation, refer to separate Owner's Manual
Rain sensor 69
Reading lamps
front 103
rear 103
Real wood, refer to Caring for your vehicle brochure
Rear backrests, power 48
Rear climate control 111
air supply 112
temperature 112
Rear lamps
refer to Tail lamps 163
replacing bulbs 163
Rear seat back, folding 124
Rear seat backrest, electric 48
Rear-seat backrest, folding down 124
Rear seats, heating 52
Rearview mirror 53
Rear window blinds, refer to Roller sun blinds 113
Rear window defroster
air conditioner 105
automatic climate control 110
Rear window safety switch 40
Rear window wiper 71
replacing bulbs 160
Rechargeable flashlight 119
Recirculated-air mode
air conditioner 105
automatic climate control 110
Reflectors, refer to Tail lamps 163
Refueling 24
fuel filler door 24
Remaining distance, refer to Cruising range 80, 87
Remaining distance for service, refer to Service Interval Display 76
Remote control 31
garage door opener, refer to Integrated universal remote control 114
liftgate 31
malfunction 32
Removal aid for spare wheel 168
Removing condensation, windows
air conditioner 106
automatic climate control 109
Replacement fuses 172
Replacement keys 30
Replacement tire 167
Replacing bulbs, refer to Lamps and bulbs 161
Replacing light bulbs 161
Replacing tires
changing a wheel 165
tire replacement 145
Reporting an accident, refer to Initiating an emergency call 173
Reporting safety defects 11
Residual heat 110
Restraint systems, refer to Safety belts 49
Restraint systems for children 57

Reverse gear
automatic transmission with Steptronic 66
manual transmission 65
Roadside Assistance 173
Roadside parking lamps 101
replacing bulbs 162
Roller blind for cargo area, refer to Roll-up cover 125
Roller sun blinds 113
Roll-up cover 125
Roof-mounted luggage rack 132
Rope, refer to Tow-starting and towing 177
Rotating coin holder, refer to Storage compartments 119

S

Safe braking 140
Safety belt height adjustment 49
Safety belts 49
adjusting belt height 49
care, refer to Caring for your vehicle brochure
sitting safely 43
warning lamp 21, 49
Safety belt tensioners, refer to Safety belts 50
Safety defects 11
Safety feature, power windows 40
Safety systems, refer to
Airbags 55
Antilock Brake System 91
Brake system 140
DSC Dynamic Stability Control 92
xDrive 94
Screw thread for tow fitting 176
Seat heating 52
Seat memory, refer to Seat, mirror and steering wheel memory 50
Seats 44
adjusting comfort seat 46
adjusting electrically 46
adjusting sports seat 45
heating 52
memory, refer to Seat, mirror and steering wheel memory 50
sitting safely 43
storing adjustment 50
Securing cargo, refer to Cargo loading 130
Securing load 131
Selector lever, automatic transmission with Steptronic 66
Selector lever interlock, refer to Changing selector lever positions 66
Selector lever positions, automatic transmission with Steptronic 65
Self-leveling suspension 95
2-axle self-leveling suspension 96
inactive 95
Service, refer to Roadside Assistance 173
Service and Warranty Information Booklet for US models 156
Service Interval Display 76, 156
Setting interior temperature 105, 109
Setting time, refer to Preselecting switch-on times 84
Shifting
automatic transmission with Steptronic 66
manual transmission 64
Shiftlock 66
Shoulder support 47
Side airbags 55
Side Impact Head Protection System 55
Side tilt, permissible 138
Side turn signals, replacing bulbs 162
Side window blinds, refer to Roller sun blinds 113
Signal horn, refer to Horn 14
Signaling briefly 68
Sitting safely 43
with airbags 43
with head restraint 43
with safety belts 43
Ski bag 123
Sliding sunroof, refer to Panorama glass roof 41
Snow chains 149
Sockets 121
Sockets in cargo area 128
Soft closure aid for liftgate, refer to Automatic Soft Close function 36
Spare fuses 172
Spare key 30
Spare wheel 167
removal aid 168
Special wash program 70
Specified engine oils 153
Speed
with compact wheel 170
with spare wheel 171
with winter tires 149
Speed limit 85

Speedometer 15, 17, 18
refer to Instrument cluster 15, 17, 18
Sport Program, automatic transmission with Steptronic 67
Sports seat 45
Stability control, refer to DSC Dynamic Stability Control 92
xDrive 94
Starting, refer to Starting engine 62
Starting engine 62
Starting problems
at very low temperatures 63
jump starting 174
Status of this Owner's Manual at time of printing 9
Steering lock 62
Steering wheel
adjustment 52
buttons on steering wheel 23
entry/exit aid 53
heating 53
lock 62
memory 50
Steering wheel adjustment, automatic 53
Steering wheel heater 53
Steering wheel memory 50
Steering wheel with multi-function buttons 23
Steptronic, refer to Manual operation 67
Stopwatch 83
Storage compartments 119
Storage compartments in cargo area 127
Storage space, refer to Cargo area 124
Storing desired speed, refer to Cruise control 71
Storing seat adjustment 50
Storing sitting position, refer to Seat, mirror and steering wheel memory 50
Storing tires 149
Supply reservoir, washer systems 152
Switches, refer to Cockpit 14
Switching air conditioner mode on and off manually 105, 110
Switching off engine 63
Switching on hour signal 83
Switch-on times, entering 84
Symbols 8
Synthetic oil 153

T

Tachometer 74
Tailgate 36
emergency operation, refer to Unlocking manually 35, 36
opening, remote control 31
remote control 31
unlocking manually 36
Tail lamps, replacing bulbs 163
Taking time, refer to Stopwatch 83
Tank capacity, refer to Fuel tank capacity 183
Technical data 180
Technical modifications 9
Telephone 116
refer to separate Owner's Manual
Telephone provisions, refer to Hands-free telephone operation 116
Temperature
air conditioner 105
automatic climate control 109
Temperature display
interior temperature 109
outside temperature 73, 80
outside temperature warning 73
setting the units 73, 80
Temperature of coolant, refer to Coolant temperature gauge 76
Temperature warning 73
Tempomat, refer to Cruise control 71
Thigh support adjustment 45
Third brake lamp
refer to Center brake lamp 164
replacing bulbs 164
Three-point belt 49
Tightening torque of lug bolts 170
Tilt alarm sensor 39
remote control 31
switching off 39
Tilt function, passenger-side mirror 51
Time of arrival 87
Timer, refer to Stopwatch 83
Tire Identification Number 145
Tire inflation pressure 141
producing 141
Tire inflation pressure monitoring, refer to Flat Tire Monitor 98
Tire Quality Grading 145

Tires
age 145
breaking-in 136
changing 148, 165
condition 146
damage 146
DOT Quality Grades 145
flat 165
inflation pressure 141
size 145
storage 149
traction 146
tread 147
tread wear 145
Uniform Tire Quality Grading 145
wear indicators, refer to Tire tread 147
winter tires 149
Tools, refer to Onboard tool kit 160
Torque
engine 180
lug bolts 170
Tow bar 176
Tow fittings 175
Towing the vehicle 175, 176
with automatic transmission 176
Tow-rope 177
Tow sockets for tow fitting 176
Tow-starting 175
Track width, refer to Dimensions 181
Traction 146
Traction aid, refer to DSC Dynamic Stability Control 92
Traction control, refer to DSC Dynamic Stability Control 92
Transmission
automatic transmission with Steptronic 65
manual transmission 64
Transmission lockout, refer to P Park 66
Transmission malfunction, refer to Malfunction 67
Transporting children safely 57
Transport securing device, refer to Securing load 131
Tread depth, refer to Tire tread 147
Tread wear 145
Trip-distance counter, refer to Trip odometer 73
Trip odometer 73
Trunk lamps, refer to Cargo area lamps 103
Trunk lid, refer to
Liftgate 35
Tailgate 36
Turning circle, refer to Dimensions 181
Turn signals 68
indicator lamp 22
replacing bulbs 162, 163
Turn signals, side, replacing bulbs 162
TV function, refer to Owner's Manual for Onboard Computer
TV set, refer to Owner's Manual for Onboard Computer
Two-axle self-leveling suspension
display 96
lowering 97
raising 97

U

Underbody protection, refer to Caring for your vehicle brochure
Uniform Tire Quality Grading 145
Units,
temperature 73, 80, 109
Universal garage door control, refer to Integrated universal remote control 114
Universal remote control 114
Unlocking
from inside 34
from outside 31
hood 150
Using antifreeze 152, 154

V

Vacuum cleaner, connecting, refer to Sockets 121, 128
Valve
inserts 170
screw caps 170
Vehicle
battery 171
breaking-in 136
care, refer to Caring for your vehicle brochure
cargo loading 130
measurements, refer to Dimensions 181
parking 63
storage, refer to Caring for your vehicle brochure
washing, refer to Caring for your vehicle brochure
weight 182

Vehicle battery 171
Vehicle jack 167
jacking points 170
Vehicle Memory 61
Ventilation 106, 111
Ventilation in the rear 106
Ventilation while parked 113
Viscosity 154
Voice command system 23
Voice control, refer to separate Owner's Manual
Volume, cargo area 182

W
Warning and indicator lamps 19
Warnings, refer to Check Control 77
Warning triangle 24
Warranty 10
refer also to Service and Warranty Information Booklet for US models or Warranty and Service Guide Booklet for Canadian models
Warranty and Service Guide Booklet for Canadian models 156
Washer fluid 152
Washer fluid reservoir, content 183
Washer jets, refer to Windshield washer nozzles 70
Washer reservoir, refer to Windshield and headlamp washer system 152
Waste container, refer to Ashtray 121
Water on roads, flooding 138
Wear indicators in tires, refer to Tire tread 147
Weights 182
Wheel/tire combinations 148
Wheelbase, refer to Dimensions 181
Wheel bolts, wrench 166
Wheel replacement 148
Width, refer to Dimensions 181
Windows 39
convenience operation 33
defrosting, refer to Defrosting windows 106, 109
safety switch 40
Windshield
defrosting, refer to Defrosting windshield 106, 109
washing 70
Windshield cleaner reservoir volume, refer to Filling capacities 183
Windshield washer, washer fluid 152
Windshield washer fluid reservoir 152
Windshield washer nozzles 70
Windshield washer system, washer/wiper system 69
Windshield wiper blades
care, refer to Caring for your vehicle brochure
replacement 160
Windshield wipers, refer to Wiper/washer system 69
Winter tires 149
changing 149
condition 146
storage 149
Wiper blade replacement 160
Wiper system 69
Working in the engine compartment 150
Wrenches/screwdrivers, refer to Onboard toolkit 160

X
xDrive 94
Xenon lamps, replacing bulbs 162

Y
Your individual vehicle 8

Refueling

BMW recommends Castrol

So that you will have important specifications available when you stop to refuel, we recommend that you fill in this table with data which apply to your vehicle.
Consult the index for individual specifications.

Fuel

Designation	

Please enter your preferred fuel here.

Engine oil

Quality	

The oil volume between the two marks on the oil dipstick corresponds to approx. 1.1 US quarts/1 liter.

Tire inflation pressures	Summer tires		Winter tires	
	Front	Rear	Front	Rear
4 persons				
5 persons or 4 plus luggage				

More about BMW

bmwusa.com

The Ultimate Driving Machine

01 41 0 159 867 ue

Online Edition for Part No. 01 41 0 159 867 - © 07/05 BMW AG

Online Edition for Part No. 01 41 0 159 867 - © 07/05 BMW AG