FOREWORD

Your INFINITI represents a new way of thinking about vehicle design. It integrates advanced engineering and superior craftsmanship with a simple, refined aesthetic sensitivity associated with traditional Japanese culture.

The result is a different notion of luxury and beauty. The vehicle itself is important, but so also is the sense of harmony that the car evokes in its driver, and the sense of satisfaction you feel with the INFINITI — from the way it looks and drives to the high level of dealer service.

To ensure that you enjoy your INFINITI to the fullest, we encourage you to read this Owner's Manual immediately. It explains all of the features, controls and performance characteristics of your INFINITI; it also provides important instructions and safety information.

A separate Warranty Information Booklet is to be found in your Owner's literature portfolio. Always carry it with you when you take your INFINITI to an authorized dealer. The portfolio contents provide complete information about all warranties covering this vehicle, the periodic maintenance required to keep the warranties in effect as well as the INFINITI Roadside Assistance program.

Additionally, a separate Customer Care and Lemon Law Information Booklet will explain how to resolve any concerns you may have with your vehicle, as well as clarify your rights under your state's lemon law.

INFINITI is dedicated to providing a satisfying ownership experience for as long as you own your car. Should you have any questions regarding your INFINITI or your INFINITI dealer, please contact our Consumer Affairs department at 1-800-662-6200. In Hawaii 1-808-836-0848 (Oahu number). In Canada 1-800-363-4520. Thank you.

READ FIRST — THEN DRIVE SAFELY

Before driving your vehicle please read your Owner's Manual carefully. This will ensure familiarity with controls and maintenance requirements, assisting you in the safe operation of your vehicle.

WARNING

IMPORTANT SAFETY INFORMATION

REMINDERS FOR SAFETY!

Follow these important driving rules to help ensure a safe and comfortable trip for you and your passengers!

- **Never drive under the influence of alcohol or drugs.**
- **Always observe posted speed limits and never drive too fast for conditions.**
- **Always use your seat belts and appropriate child restraint systems. Preteen children should be seated in the rear seat.**
- **Always provide information about the proper use of vehicle safety**

features to all occupants of the vehicle.

- **Always review this Owner's Manual for important safety information.**

MODIFICATION OF YOUR VEHICLE

This vehicle should not be modified. Modification could affect its performance, safety or durability, and may even violate governmental regulations. In addition, damage or performance problems resulting from modification may not be covered under INFINITI warranties.

WHEN READING THE MANUAL

This manual includes information for all options available on this model. Therefore, you may find some information that does not apply to your vehicle.

All information, specifications and illustrations in this manual are those in effect at the time of printing. INFINITI reserves the right to change specifications or design at any time without notice.

IMPORTANT INFORMATION ABOUT THIS MANUAL

You will see various symbols in this manual. They are used in the following ways:

⚠ *WARNING*

This is used to indicate the presence of a hazard that could cause death or serious personal injury. To avoid or reduce the risk, the procedures must be followed precisely.

⚠ *CAUTION*

This is used to indicate the presence of a hazard that could cause minor or moderate personal injury or damage to your vehicle. To avoid or reduce the risk, the procedures must be followed carefully.

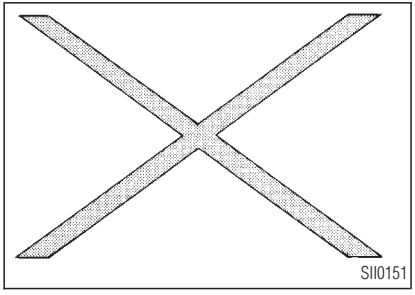

If you see this symbol, it means **Do not do this** or **Do not let this happen**.

INFINITI®

© 1998 NISSAN MOTOR CO., LTD.
TOKYO, JAPAN

All rights reserved. No part of this Owner's Manual may be reproduced or stored in a retrieval system, or transmitted in any form, or by any means, electronic, mechanical, photocopying, recording or otherwise, without the prior written permission of Nissan Motor Co., Ltd.

TABLE OF CONTENTS

SEATS, RESTRAINTS AND SUPPLEMENTAL AIR BAG SYSTEMS 1-1
INSTRUMENTS AND CONTROLS 2-1
PRE-DRIVING CHECKS AND ADJUSTMENTS..... 3-1
HEATER, AIR CONDITIONER AND AUDIO SYSTEMS 4-1
STARTING AND DRIVING..... 5-1
IN CASE OF EMERGENCY 6-1
APPEARANCE AND CARE..... 7-1
DO-IT-YOURSELF 8-1
MAINTENANCE 9-1
TECHNICAL AND CONSUMER INFORMATION 10-1
INDEX 11-1

1 SEATS, RESTRAINTS AND SUPPLEMENTAL AIR BAG SYSTEMS

Seats 1-2
Front power seat adjustment 1-3
Head restraint adjustment 1-4
Supplemental restraint system 1-5
Precautions on supplemental restraint system 1-5
Supplemental air bag warning labels 1-17
Supplemental air bag warning light 1-18
Seat belts 1-19
Precautions on seat belt usage 1-19
Child safety 1-22
Pregnant women 1-24
Injured persons 1-24
Three-point type seat belt with retractor 1-24
Seat belt extenders 1-28
Seat belt maintenance 1-28
Child restraints 1-28
Precautions on child restraints 1-28
Installation on rear seat outboard or center positions 1-31
Top strap child restraint 1-36
Installation on front passenger seat 1-38

SEATS, RESTRAINTS AND SUPPLEMENTAL AIR BAG SYSTEMS

SEATS

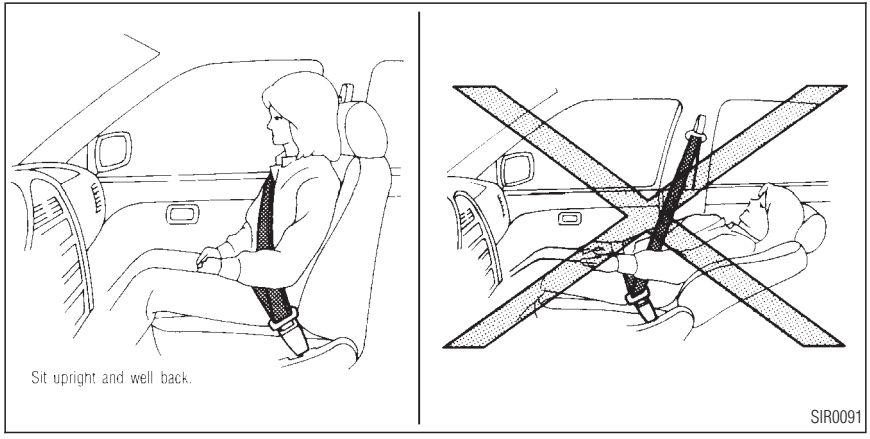

WARNING

- *Do not ride in a moving vehicle when the seatback is reclined. This can be dangerous. The shoulder belt will not be against your body. In an accident you could be thrown into it and receive neck or other serious injuries. You could also slide under the lap belt and receive serious internal injuries.*
- *For most effective protection when the vehicle is in motion, the seat should be upright. Always sit well back in the seat and adjust the seat belt properly. See "Seat belts" later in this section for precautions on seat belt usage.*

FRONT POWER SEAT ADJUSTMENT

WARNING

- ***Do not adjust the driver's seat while driving in order that full attention may be given to the driving operations.***
- ***Do not leave children unattended inside the vehicle. They could unknowingly activate switches or controls. Unattended children could become involved in serious accidents.***

Operating tips

- The motor has an auto-reset overload protection circuit. If the motor stops during operation, wait 30 seconds, then reactivate the switch.
- Do not operate the power seat for a long period of time when the engine is off. This will discharge the battery.

Forward and backward

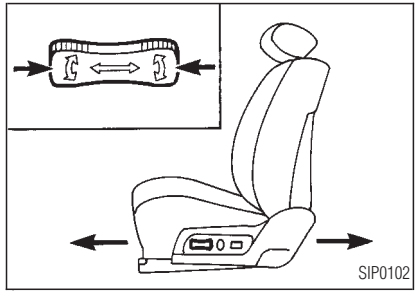

Moving the switch forward or backward will slide the seat forward or backward to the desired position.

Reclining

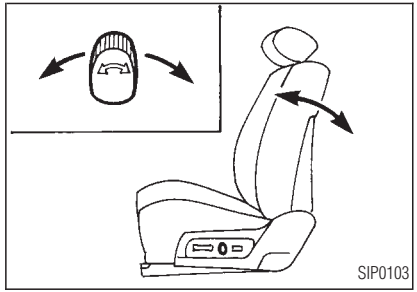

Move the recline switch backward until the desired angle is obtained. To bring the seatback forward again, move the switch forward and move your body forward. The seatback will move forward.

Seat lifter

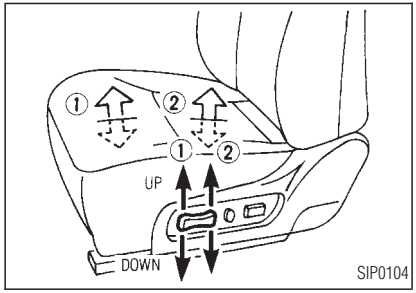

Push the front or rear end of the switch up or down to adjust the angle and height of the seat cushion.

Lumbar support

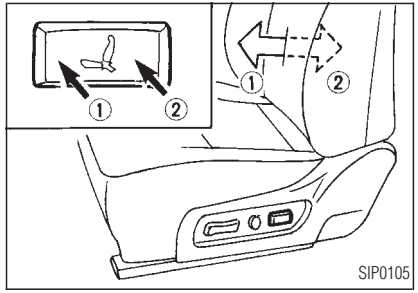

Push either side of the switch to adjust the seat lumbar area.

HEAD RESTRAINT ADJUSTMENT

WARNING

Head restraints should be adjusted properly as they may provide significant protection against injury in an accident. Do not remove them. Check the adjustment after someone else uses the seat.

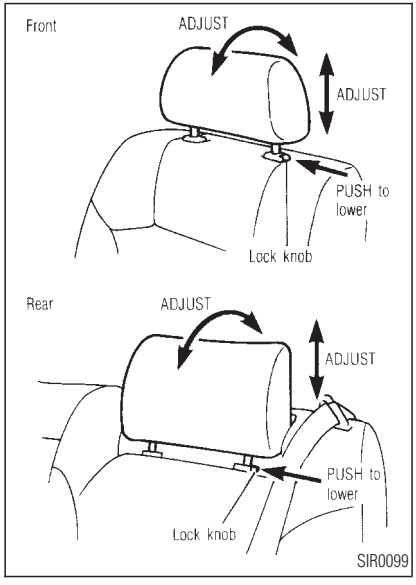

Adjust the head restraints so the top is level with the tops of your ears.

To raise the head restraint, simply pull it up.

To lower, push the lock knob and push the head restraint down.

To adjust the head restraint forward and backward, push it in the direction required.

SUPPLEMENTAL RESTRAINT SYSTEM

PRECAUTIONS ON SUPPLEMENTAL RESTRAINT SYSTEM

This Supplemental Restraint System (SRS) section contains important information concerning the driver and passenger supplemental air bags, supplemental side air bags and pre-tensioner seat belt.

Supplemental air bag system: This system can help cushion the impact force to the face and chest of the driver and front passenger in certain frontal collisions.

Supplemental side air bag system: This system can help cushion the impact force to the head and chest area of the driver and front passenger in certain side impact collisions. The supplemental side air bag is designed to inflate on the side where the vehicle is impacted.

These supplemental restraint systems are designed to **supplement** the crash protection provided by the driver and front passenger seat belts and are **not a substitute** for them. Seat belts should always be correctly worn and the driver and front passenger seated a suitable distance away from the steering wheel, instrument panel and front door finishers. (See “Seat belts” later in this section for instructions and precautions on seat belt usage.)

After turning the ignition key to the ON position, the supplemental air bag warning light illuminates. The supplemental air bag warning light will turn off after about 7 seconds if the system is operational.

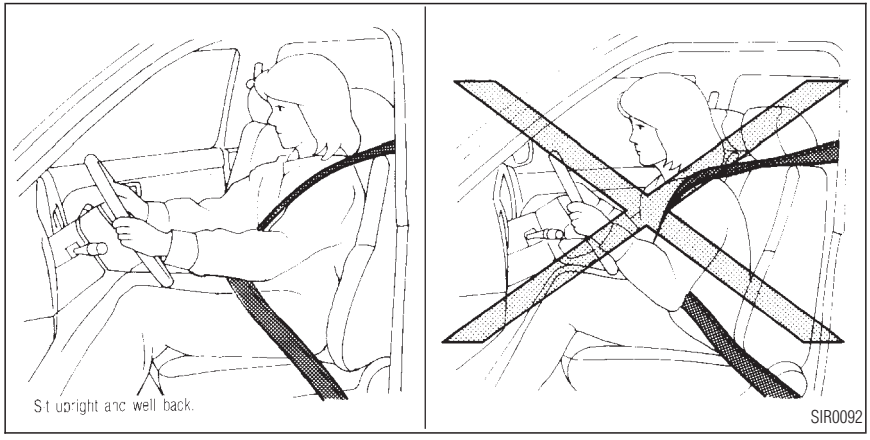

WARNING

- *The supplemental air bags ordinarily will not inflate in the event of a side impact, rear impact, roll over, or lower severity frontal collision. Always wear your seat belts to help reduce the risk or severity of injury in various kinds of accidents.*
- *The seat belts and the supplemental air bags are most effective when you are sitting well back and upright in the seat. Supplemental air bags inflate with great force. If you are unrestrained, leaning forward, sitting sideways or out of position in any way, you are at greater risk of injury or death in a crash and may also receive serious or fatal injuries from the supplemental air bag if you are up against it when it inflates. Always sit back against the seatback and as far away as practical from the steering wheel or instrument panel. Always use the seat belts.*
- *Keep hands on the outside of the steering wheel. Placing them inside the steering wheel rim could increase the risk that they are injured when the supplemental*

air bag inflates.

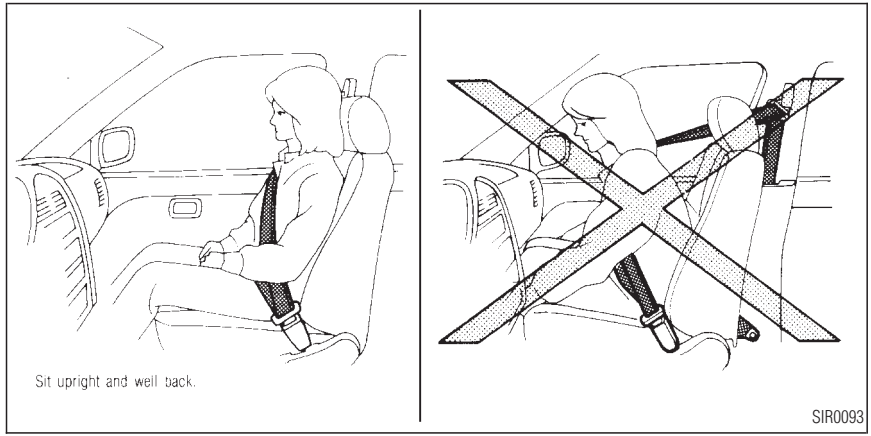

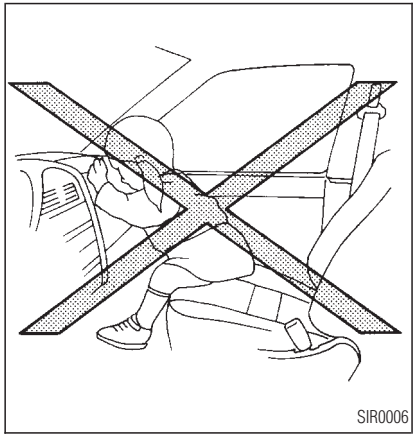
SIR0006

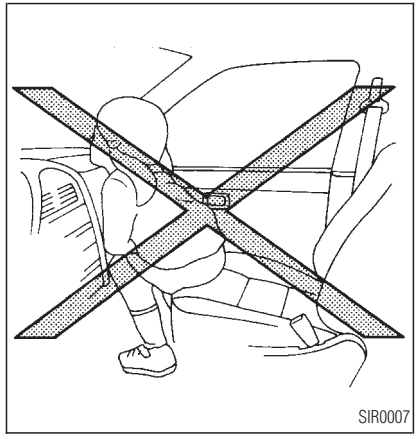
SIR0007

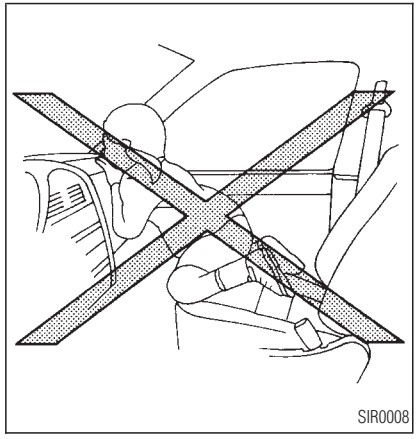
SIR0008

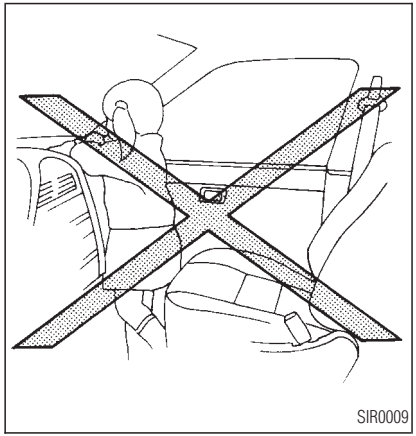
SIR0009

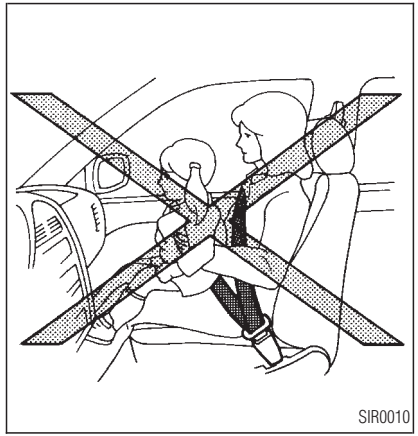
SIR0010

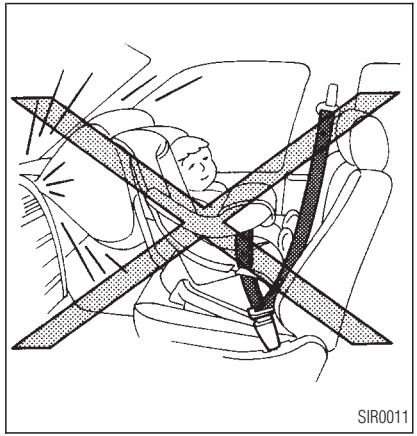
SIR0011

WARNING

- *Never let children ride unrestrained or extend their hands or face out of the window. Do not attempt to hold them in your lap or arms. Some examples of dangerous riding positions are shown in the previous illustrations.*
- *Children may be severely injured or killed when the supplemental air bag or supplemental side air bag inflates if they are not properly restrained.*
- *Also never install a rear facing child restraint in the front seat. An inflating supplemental air bag could seriously injure or kill your child. For additional information, see "Child restraints" later in this section.*

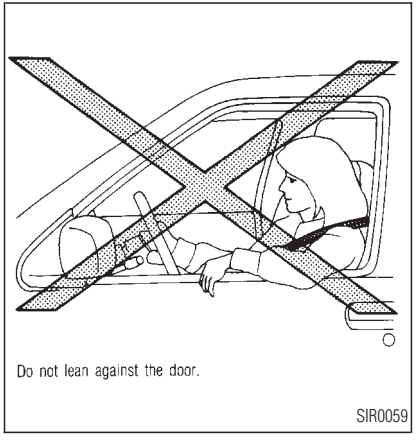

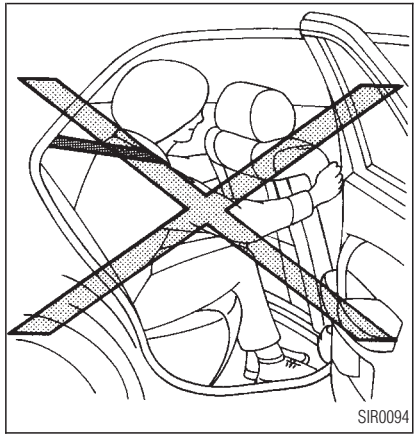

WARNING

- *The supplemental side air bag ordinarily will not inflate in the event of a frontal impact, rear*

impact or lower severity side collision. Always wear your seat belts to help reduce the risk or severity of injury in various kinds of accidents.

- *The seat belts and the supplemental side air bag are most effective when you are sitting well back and upright in the seat. Supplemental side air bag inflates with great force. Do not allow anyone to place their hand, leg or face near the supplemental side air bag on the side of the seatback of the front seat. Do not allow anyone sitting in the front seat to extend their hand out of the window or lean against the door.*

When sitting in the rear seat, do not hold onto the seatback of the front seat. If the supplemental side air bag inflates, the occupant may be seriously injured. Be especially careful with children, who should always be properly restrained.

- *Do not use seat covers on the front seatbacks. They may interfere with supplemental side air bag inflation.*

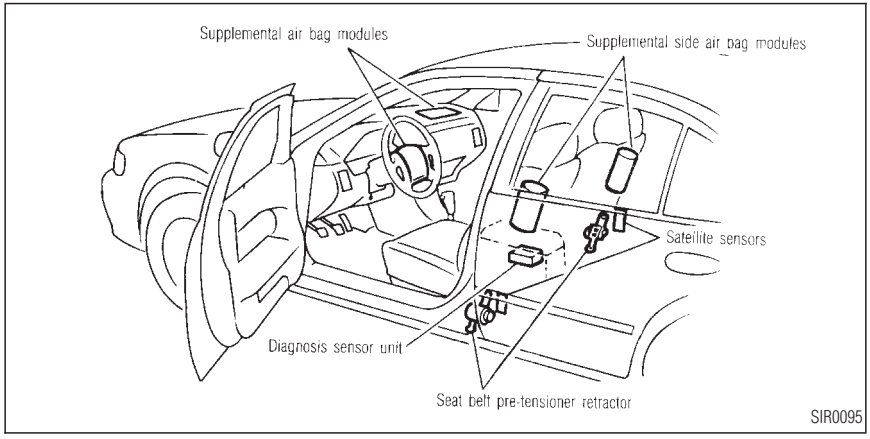

Supplemental air bag system

The driver supplemental air bag is located in the center of the steering wheel; the front passenger supplemental air bag is mounted in the dashboard above the glove box. These systems are designed to meet optional certification requirements under U.S. regulations. They are also permitted in Canada. The optional certification allows air bags to be designed to inflate somewhat less forcefully than previously. **However, all of the information, cautions and warnings in this manual still apply and must be followed.** The supplemental air bags are designed to inflate in higher severity frontal collisions, although they may inflate if the forces in another type of collision are similar to those of a higher severity frontal impact. They may not inflate in certain frontal collisions. Vehicle damage (or lack of it) is not always an indication of proper supplemental air bag operation.

When the supplemental air bag inflates, a fairly loud noise may be heard, followed by release of smoke. This smoke is not harmful and does not indicate a fire, but care should be taken not to inhale it, as it may cause irritation and choking. Those with a history of a breathing condition should get fresh air promptly.

Supplemental air bags along with the use of seat belts, help to cushion the impact force on the face and chest of the front occupants. They can help save lives and reduce serious injuries. However, an inflating supplemental air bag may cause facial abrasions or other injuries. Supplemental air bags do not provide restraint to the lower body.

The seat belts should be correctly worn and the driver and passenger seated upright as far as practical away from the steering wheel or dash board. Since the supplemental air bags inflate quickly in order to help protect the front occupants, the force of the supplemental air bag inflating can increase the risk of injury if the occupant is too close to or is against the supplemental air bag module during inflation. The supplemental air bag will deflate quickly after the collision is over.

After turning the ignition key to the ON position, the supplemental air bag warning light illuminates. The air bag warning light will turn off after about 7 seconds if the system is operational.

WARNING

- ***Do not place any objects on the steering wheel pad or on the instrument panel. Also, do not place any objects between any occupant and the steering wheel or instrument panel. Such objects may become dangerous projectiles and cause injury if the supplemental air bag inflates.***
- ***Right after inflation, several supplemental air bag system components will be hot. Do not touch them; you may severely burn yourself.***
- ***No unauthorized changes should be made to any components or wiring of the supplemental air bag system. This is to prevent accidental inflation of the supplemental air bag or damage to the supplemental air bag system.***
- ***Do not make unauthorized changes to your vehicle's electrical system or suspension system or front end structure. This could affect proper operation of the supplemental air bag system.***
- ***Tampering with the supplemental air bag system may result in serious personal injury. Tampering includes changes to the steering wheel and the instrument panel assembly by placing material over the steering wheel pad, above the dashboard, or by installing additional trim material around the supplemental air bag system.***
- ***Work around and on the supplemental air bag system should be done by an authorized INFINITI dealer. Installation of electrical***

equipment should also be done by an authorized INFINITI dealer. The SRS wiring harnesses* should not be modified or disconnected. Unauthorized electrical test equipment and probing devices should not be used on the supplemental air bag system.

*** The SRS wiring harnesses are covered with yellow insulation either just before the harness connectors or over the complete harness for easy identification.***

When selling your vehicle, we request that you inform the buyer about the supplemental air bag system and guide the buyer to the appropriate sections in this Owner's Manual.

Supplemental side air bag system

The supplemental side air bags are located in the outside of the seatback of the front seats. The supplemental side air bag (on the driver or front passenger seat) is designed to inflate in higher severity side collisions, although it may inflate if the forces in another type of collision are similar to those of a higher severity side impact. It is designed to inflate on the side where the vehicle is impacted. It may not inflate in certain side collisions. Vehicle damage (or lack of it) is not always an indication of proper supplemental side air bag operation.

When the supplemental side air bag inflates, a fairly loud noise may be heard, followed by release of smoke. This smoke is not harmful and does not indicate a fire, but care should be taken not to inhale it, as it may cause irritation and choking. Those with a history of a breathing condition should get fresh air promptly.

Supplemental side air bags along with the use of seat belts, help to cushion the impact force on the head and chest of the front occupants. They can help save lives and reduce serious injuries. However, an inflating supplemental side air bag may cause abrasions or other injuries.

The seat belts should be correctly worn and the driver and passenger seated upright as far as practical away from the supplemental side air bag. Since the supplemental side air bags inflate quickly in order to help protect the front occupants, the force of the supplemental side air bag inflating can increase the risk of injury if the occupant is too close to or is against the supplemental side air bag module during inflation. The supplemental side air bag will deflate quickly after the collision is over.

After turning the ignition key to the ON position, the supplemental air bag warning light illuminates. The air bag warning light will turn off after about 7 seconds if the system is operational.

WARNING

- *Do not place any objects near the seatback of the front seats. Also, do not place any objects (an umbrella, bag, etc.) between the front door finisher and the front seat. Such objects may become dangerous projectiles and cause injury if the supplemental side air bag inflates.*
- *Right after inflation, several supplemental side air bag system components will be hot. Do not touch them; you may severely burn yourself.*
- *No unauthorized changes should be made to any components or wiring of the supplemental side air bag system. This is to prevent accidental inflation of the supplemental side air bag or damage to the supplemental side air bag system.*
- *Do not make unauthorized changes to your vehicle's electrical system, suspension system or side panel. This could affect proper operation of the supplemental side air bag system.*
- *Tampering with these supplemental system may result in serious personal injury. Tampering includes changes to the front seats assembly by placing material near the seatback of the front seat, or by installing additional trim material around the supplemental side air bag system.*
- *Work around and on the supplemental side air bag system should be done by an authorized INFINITI dealer. Installation of electrical equipment should also be done by an authorized INFINITI dealer. The SRS wiring harnesses* should not be modified or disconnected. Unauthorized electrical test equipment and probing devices should not be used on the supplemental side air bag system.*

* *The SRS wiring harnesses are covered with yellow insulation either just before the harness connectors or over the complete harness for easy identification.*

When selling your vehicle, we request that you inform the buyer about the supplemental side

air bag system and guide the buyer to the appropriate sections in this Owner's Manual.

Pre-tensioner seat belt system (For front seats)

WARNING

- ***The pre-tensioner seat belt cannot be reused after activation. It must be replaced together with the retractor as a unit.***
- ***If the vehicle becomes involved in a frontal collision but the pre-tensioner is not activated, be sure to have the pre-tensioner system checked and, if necessary, replaced by your INFINITI dealer.***
- ***No unauthorized changes should be made to any components or wiring of the pre-tensioner seat belt system. This is to prevent accidental activation of the pre-tensioner seat belt or damage to the pre-tensioner seat belt operation. Tampering with the pre-tensioner seat belt system may result in serious personal injury.***
- ***Work around and on the pretensioner system should be done by an authorized INFINITI dealer. Installation of electrical equipment should also be done by an authorized INFINITI dealer. Unauthorized electrical test equipment and probing devices should not be used on the pre-tensioner seat belt system.***
- ***If you need to dispose of the pre-tensioner or scrap the vehicle, contact an authorized INFINITI dealer. Correct pre-tensioner disposal procedures are set forth in the appropriate INFINITI Service Manual. Incorrect disposal procedures could cause personal injury.***

The front seat pre-tensioner seat belt system activates in conjunction with the supplemental air bag. Working with the seat belt retractor, it helps tighten the seat belt the instant the vehicle becomes involved in certain types of collisions, thereby restraining seat occupants.

The pre-tensioner is encased with the seat belt's retractor. These seat belts are used the same as conventional seat belts.

When the pre-tensioner seat belt activates, smoke is released and a loud noise may be heard. The smoke is not harmful, but care should be taken not to inhale it as it may

cause irritation and choking.

If any abnormality occurs in the pre-tensioner system, the seat belt warning light will flash intermittently after the ignition key is turned to the ON or START position. In this case, the pre-tensioner seat belt will not function properly.

When selling your vehicle, we request that you inform the buyer about the pre-tensioner seat belt system and guide the buyer to the appropriate sections in this Owner's Manual.

SUPPLEMENTAL AIR BAG WARNING LABELS

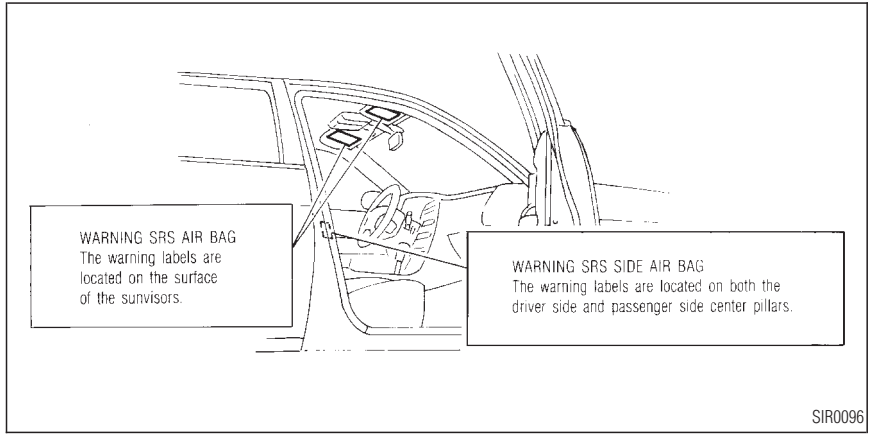

Warning labels about the supplemental air bag system and supplemental side air bag system are placed in the vehicle as shown in the illustration.

SUPPLEMENTAL AIR BAG WARNING LIGHT

The supplemental air bag warning light, displaying AIR BAG in the instrument panel, monitors the circuits of the supplemental air bag and supplemental side air bag systems. The circuits monitored by the supplemental air bag warning light are the diagnosis sensor unit, satellite sensors, supplemental air bag modules, supplemental side air bag modules and all related wiring.

After turning the ignition key to the ON position, the supplemental air bag warning light illuminates. The supplemental air bag warning light will turn off after about 7 seconds if the system is operational.

If any of the following conditions occur, the supplemental air bag and supplemental side air bag systems needs servicing:

- The supplemental air bag warning light does not come on and remain on for 7 seconds and then go off as described above.
- The supplemental air bag warning light flashes intermittently or remains on (after 7 seconds).
- The supplemental air bag warning light does not come on at all.

Under these conditions, the supplemental air bags or supplemental side air bags may not operate properly. It must be checked and repaired. Take your vehicle to the nearest authorized INFINITI dealer.

WARNING

If the supplemental air bag warning light is on, it could mean that the supplemental air bag or supplemental side air bag system will not operate in an accident.

Repair and replacement procedure

The supplemental air bags or supplemental side air bags are designed to inflate on a one-time-only basis. As a reminder, unless it is damaged, the supplemental air bag warning light will remain illuminated after inflation has occurred. Repair and replacement of these supplemental systems should be done only by authorized INFINITI dealers.

To ensure long-term functioning, these systems must be inspected 10 years after the date of manufacture noted on

the certification label located on the driver side center pillar.

When maintenance work is required on the vehicle, the supplemental air bags, supplemental side air bags and related parts should be pointed out to the person conducting the maintenance. The ignition key should always be in the LOCK position when working under the hood or inside the vehicle.

WARNING

- ***Once the supplemental air bag or supplemental side air bag has inflated, the supplemental air bag module or supplemental side air bag module will not function again and must be replaced. The supplemental air bag module or supplemental side air bag module should be replaced by an authorized INFINITI dealer. The supplemental air bag module or supplemental side air bag module cannot be repaired.***
- ***The supplemental air bag and supplemental side air bag systems should be inspected by an authorized INFINITI dealer if there is any damage to the front end or side portion of the vehicle.***
- ***If you need to dispose of these supplemental systems or scrap the vehicle, contact an authorized INFINITI dealer.***

  Correct disposal procedures are set forth in the appropriate INFINITI Service Manual. Incorrect disposal procedures could cause personal injury.

SEAT BELTS

PRECAUTIONS ON SEAT BELT USAGE

Your chances of being injured in an accident and/or the severity of injury or killed may be greatly reduced if you are wearing your seat belt and it is properly adjusted. INFINITI strongly encourages you and all of your passengers to buckle up every time you drive, even if your seating position includes a supplemental air bag.

Most states, all provinces and territories require that seat belts be worn at all times when a vehicle is being driven.

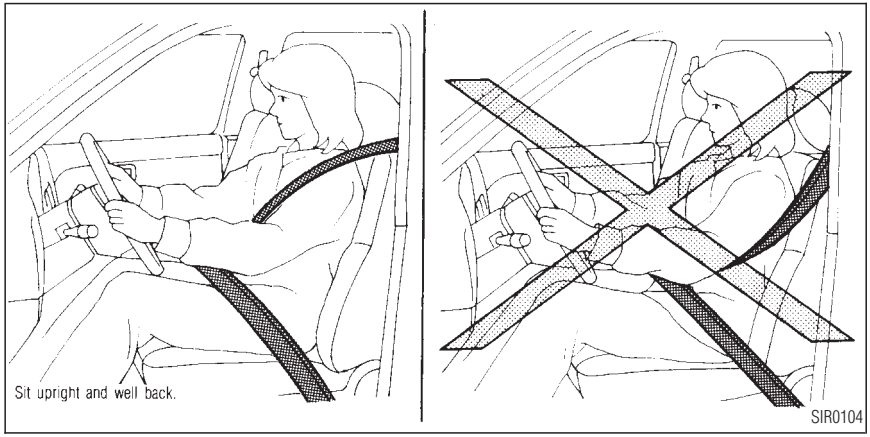

WARNING

- *Every person who drives or rides in this vehicle should use a seat belt at all times. Children should be properly restrained and, if appropriate, in a child restraint.*
- *The belt should be properly adjusted to a snug fit. Failure to do so may reduce the effectiveness of the entire restraint system and increase the chance or severity of injury in an accident. Serious injury or death can occur if the seat belt is not worn properly.*
- *Always route the shoulder belt over your shoulder and across your chest. Never run the belt behind your back, under your arm or across your neck. The belt should be away from your face and neck, but not falling off your shoulder.*
- *Position the lap belt as low and snug as possible around the hips, not the waist. A lap belt worn too high could increase the risk of internal injuries in an accident.*

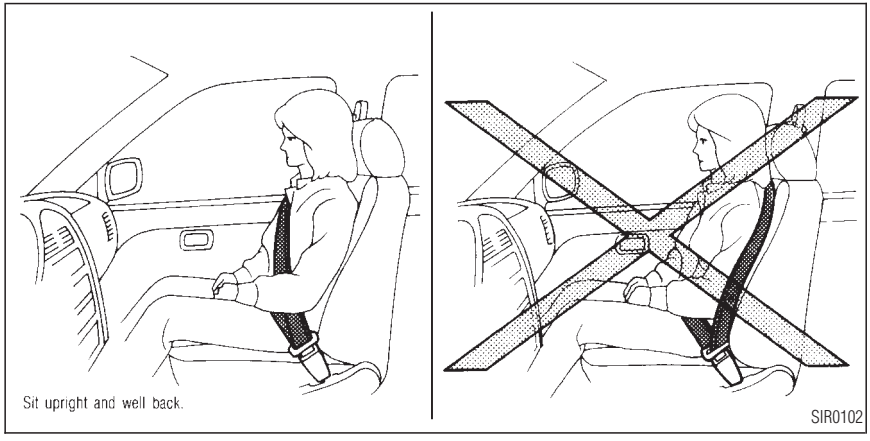

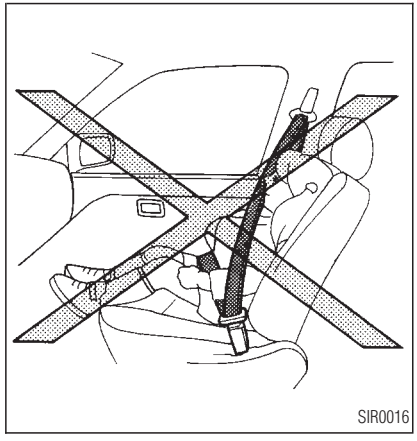

- ***Be sure the seat belt tongue is securely fastened to the proper buckle.***
- ***Do not wear the belt inside out or twisted. Doing so may reduce its effectiveness.***
- ***Do not allow more than one person to use the same belt.***
- ***Never carry more people in the vehicle than there are seat belts.***
- ***If the seat belt warning light glows continuously while the ignition is turned ON with all doors closed and all seat belts fastened, it may indicate a malfunc-***

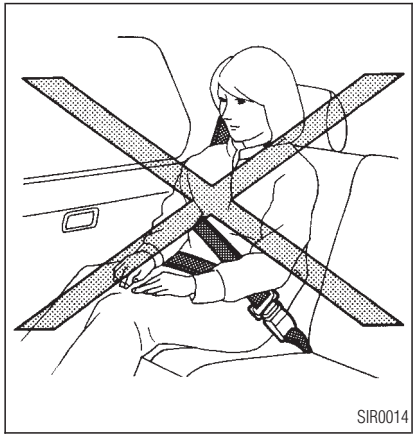

tion in the system. Have the system checked by your INFINITI dealer.

- *Once the pre-tensioner seat belt has activated, it cannot be reused and must be replaced together with the retractor. See your INFINITI dealer.*
- *Removal and installation of the pre-tensioner seat belt system components should be done by an authorized INFINITI dealer.*
- *All seat belt assemblies including retractors and attaching hardware should be inspected after any collision by your INFINITI dealer. INFINITI recommends that all seat belt assemblies in use during a collision be replaced unless the collision was minor and the belts show no damage and continue to operate properly. Seat belt assemblies not in use during a collision should also be inspected and replaced if either damage or improper operation is noted.*

CHILD SAFETY

Children need adults to help protect them. They need to be properly restrained.

The proper restraint depends on the child's size. Generally, infants (up to about 1 year and less than 20 lb (9 kg)) should be placed in rear facing child restraints. Front facing child restraints are available for children who outgrow rear facing child restraints.

⚠ *WARNING*

Infants and children need special

protection. The vehicle's seat belts may not fit them properly. The shoulder belt may come too close to the face or neck. The lap belt may not fit over their small hip bones. In an accident, an improperly fitting seat belt could cause serious or fatal injury. Always use appropriate child restraints.

All US states and provinces of Canada require the use of approved child restraints for infants and small children. (See "Child restraints" later in this section.)

In addition, there are many types of child restraints available for larger children which should be used for maximum protection.

INFINITI recommends that all preteens and children be restrained in the rear seat if possible. According to accident statistics, children are safer when properly restrained in the rear seat than in the front seat.

This is especially important because your vehicle has a supplemental restraint system (air bag system) for the front passenger. See "Supplemental restraint system" earlier in this section for precautions.

Infants and small children

INFINITI recommends that infants and small children be placed in child restraints that comply with Federal Motor Vehicle Safety Standards or Canadian Motor Vehicle Safety Standards. You should choose a child restraint which fits your vehicle and always follow the manufacturer's instructions for installation and use.

Larger children

Children who are too large for child restraints should be seated and restrained by the seat belts which are provided.

If the child's seating position has a shoulder belt that fits close to the face or neck, the use of a booster seat (commercially available) may help overcome this. The booster seat should raise the child so that the shoulder belt is properly positioned across the top, middle portion of the shoulder and the lap belt is low on the hips. The booster seat should fit the vehicle seat and have a label certifying that it complies with Federal Motor Vehicle Safety Standards or Canadian Motor Vehicle Safety Standards. Once the child has grown so the shoulder belt is no longer on or near the face and neck, use the shoulder belt without the booster seat.

WARNING

Never let a child stand or kneel on any seat and do not allow a child in

the cargo areas while the vehicle is moving. The child could be seriously injured or killed in an accident.

PREGNANT WOMEN

INFINITI recommends that pregnant women use seat belts. The seat belt should be worn snug, and always position the lap belt as low as possible around the hips, not the waist, and place the shoulder belt over your shoulder and across your chest. Never run the lap/shoulder belt over your abdominal area. Contact your doctor for specific recommendations.

INJURED PERSONS

INFINITI recommends that injured persons use seat belts, depending on the injury. Check with your doctor for specific recommendations.

THREE-POINT TYPE SEAT BELT WITH RETRACTOR

WARNING

- ***Every person who drives or rides in this vehicle should use a seat belt at all times.***
- ***Do not ride in a moving vehicle when the seatback is reclined. This can be dangerous. The shoulder belt will not be against your body. In an accident you could be thrown into it and receive neck or other serious injuries. You could also slide under the lap belt and receive serious internal injuries.***
- ***For most effective protection when the vehicle is in motion, the seat should be upright. Always sit well back in the seat and adjust the seat belt properly.***

Fastening the seat belts

1. Adjust the seat.

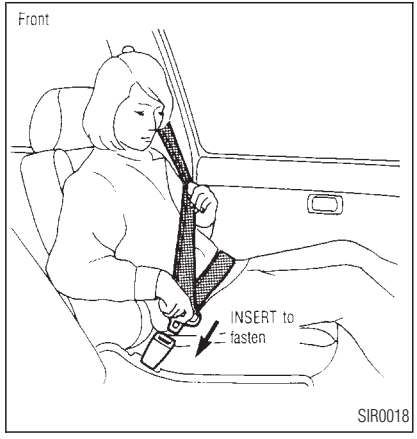

2. Slowly pull the seat belt out of the retractor and insert the tongue into the buckle until it snaps.

The retractor is designed to lock during a sudden stop or on impact. A slow pulling motion will permit the belt to move, and allow you some freedom of movement in the seat.

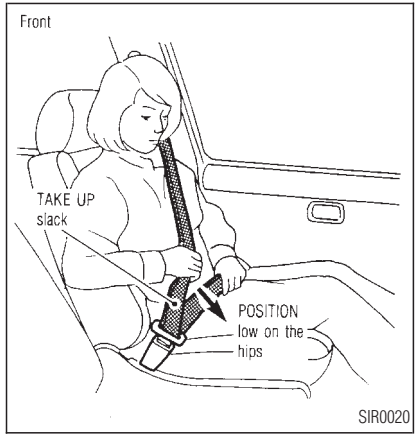

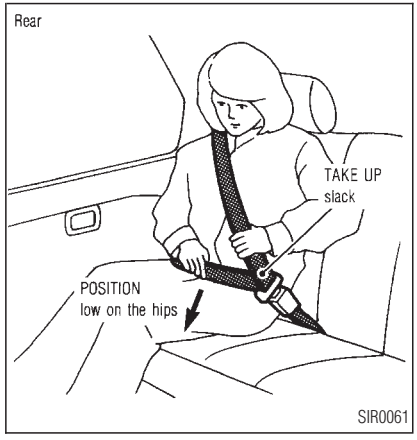

3. Position the lap belt portion **low and snug on the hips** as shown.
4. Pull the shoulder belt portion toward the retractor to take up extra slack.

The front passenger and rear seat belts have a cinching mechanism for child restraint installation. It is referred to as the automatic locking

mode. When the cinching mechanism is activated the seat belt cannot be withdrawn again until the seat belt tongue is detached from the buckle and fully retracted. For additional information, see “Child restraints” later in this section.

The automatic locking mode should be used only for child restraint installation. During normal seat belt use by an occupant, the locking mode should not be activated. If it is activated it may cause uncomfortable seat belt tension.

Unfastening the seat belts

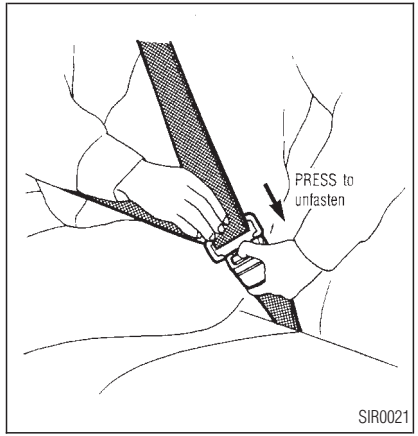

To unfasten the belt, press the button on the buckle. The seat belt will automatically retract.

Checking seat belt operation

Your seat belt retractors are designed to lock belt movement by two separate methods:

- when the belt is pulled quickly from the retractor.
- when the vehicle slows down rapidly.

To increase your confidence in the belts, check their operation as follows:

- grasp the shoulder belt and pull quickly forward. The retractor should lock and restrict further belt movement.

If the retractor does not lock during this check or if you have any question about belt operation, see your INFINITI dealer.

Center of rear seat

Selecting correct set of seat belts:

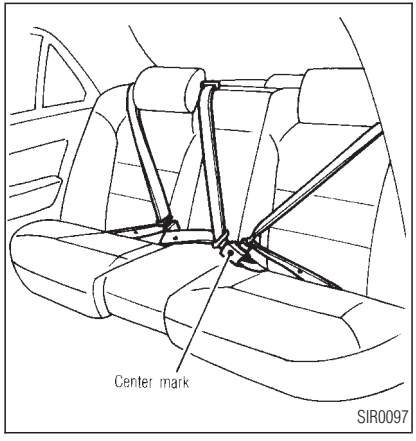

The center seat belt buckle is identified by the CENTER mark. The center seat belt tongue can be fastened **only** into the center seat belt buckle.

Shoulder belt height adjustment (For front seats)

The shoulder belt anchor height should be adjusted to the position best for you. See earlier in "Seat belts" for precautions on seat belt usage.

WARNING

- ***After adjustment, release the knob and try to move the shoulder belt anchor up and down to make sure it is securely fixed in position.***
- ***The shoulder belt anchor height should be adjusted to the position best for you. Failure to do so may reduce the effectiveness of the entire restraint system and increase the chance or severity of injury in an accident.***

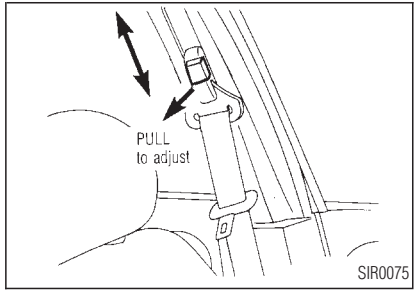

To adjust, pull the release knob, and then move the shoulder belt anchor to the desired position, so that the belt passes over the center of the shoulder. The belt should be away from your face and neck, but not falling off of your shoulder. Release the adjustment knob to lock the shoulder belt anchor into position.

SEAT BELT EXTENDERS

If, because of body size or driving position, it is not possible to properly fit the lap-shoulder belt and fasten it, an extender is available which is compatible with the installed seat belts. The extender adds approximately 8 in (200 mm) of length and may be used for either the driver or front passenger seating position. See your INFINITI dealer for assistance if the extender is required.

WARNING

- ***Only INFINITI belt extenders, made by the same company which made the original equipment belts, should be used with the INFINITI belts.***
- ***Persons who can use the standard seat belt should not use an extender. Such unnecessary use could result in serious personal injury in the event of an accident.***

SEAT BELT MAINTENANCE

- **To clean the seat belt webbings,** apply a mild soap solution or any non-caustic solution recommended for gently cleaning cloth upholstery or carpets. Then brush it, wipe with a cloth and allow it to dry in the shade. Do not allow the seat belts to retract until they are completely dry.
- If dirt builds up in the shoulder belt guide of the seat belt anchors, the seat belts may retract slowly. Wipe the shoulder belt guide with a clean, dry cloth.
- **Periodically check to see that the seat belt and the metal components** such as buckles, tongues, retractors, flexible wires and anchors work properly. If loose parts, deterioration, cuts or other damage on the webbing are found, the entire belt assembly should be replaced.

CHILD RESTRAINTS

PRECAUTIONS ON CHILD RESTRAINTS

WARNING

- ***Infants and small children should always be placed in an appropriate child restraint while riding in the vehicle. Failure to use a child restraint can result in serious injury or death.***
- ***Infants and small children should never be carried on your lap. It is not possible for even the strongest adult to resist the forces of a***

severe accident. The child could be crushed between the adult and parts of the vehicle. Also, do not put the same seat belt around both your child and yourself.

- ***Never install a rear facing child restraint in the front seat. An inflating supplemental air bag could seriously injure or kill your child. A rear facing child restraint must only be used in the rear seat.***
- ***INFINITI recommends that the child restraint be installed in the rear seat. According to accident statistics, children are safer when properly restrained in the rear seat than in the front seat.***
- ***An improperly installed child restraint could lead to serious injury or death in an accident.***

In general, child restraints are designed to be installed with the lap portion of a three-point type seat belt.

Child restraints for infants and children of various sizes are offered by several manufacturers. When selecting any child restraint system, keep the following points in mind:

- choose only a restraint with a label certifying that it complies with Federal Motor Vehicle Safety Standard 213 or Canadian Motor Vehicle Safety Standard 213.
- check the child restraint in your vehicle to be sure it is compatible with the vehicle's seat and seat belt system. Choose a child restraint that meets the guidelines of the Society of Automotive Engineers recommended practice J1819 for child restraint installation.
- if the child restraint is compatible with your vehicle, place your child in the child restraint and check the various adjustments to be sure the child restraint is compatible with your child. Always follow all recommended procedures.

All US states and provinces of Canada require that infants and small children be restrained in approved child restraints at all times while the vehicle is being operated.

WARNING

- ***Improper use of a child restraint can result in increased injuries for both the infant or child and other occupants in the vehicle.***

- *Follow all of the child restraint manufacturer's instructions for installation and use. When purchasing a child restraint, be sure to select one which will fit your child and vehicle. It may not be possible to properly install some types of child restraints in your vehicle.*
- *If the child restraint is not anchored properly, the risk of a child being injured in a collision or a sudden stop greatly increases.*
- *Adjustable seatbacks should be positioned to fit the child restraint, but as upright as possible.*
- *After attaching the child restraint, test it before you place the child in it. Tilt it from side to side. Try to tug it forward and check to see if the belt holds the restraint in place. If the restraint is not secure, tighten the belt as necessary, or put the restraint in another seat and test it again.*
- *For a front facing child restraint, if the seat position where it is installed has a three-point type lap/shoulder belt, check to make sure the shoulder belt does not go in front of the child's face or neck. If it does, put the shoulder belt behind the child restraint. If you must install a front facing child restraint in the front seat, see later in "Child restraints" for installation on front passenger seat.*
- *When your child restraint is not in use, store it in the trunk or keep it secured with a seat belt to prevent it from being thrown around in case of a sudden stop or accident.*

CAUTION

Remember that a child restraint left in a closed vehicle can become very hot. Check the seating surface and buckles before placing your child in the child restraint.

INSTALLATION ON REAR SEAT OUTBOARD OR CENTER POSITIONS

Front facing

WARNING

- ***The three-point belt on your vehicle is equipped with a locking mode retractor which must be used when installing a child restraint.***
- ***Failure to do so will result in the child restraint not being properly secured. It could tip over or otherwise be unsecured and cause injury to the child in a sudden stop or collision.***

When you install a child restraint in a rear outboard or center seat, follow these steps:

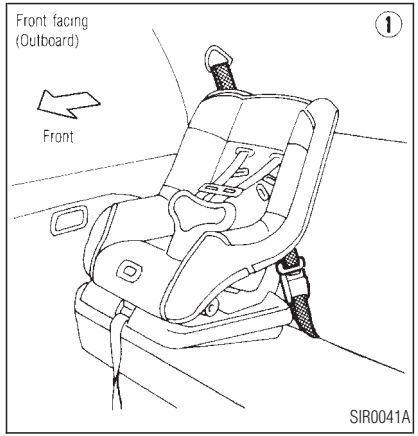

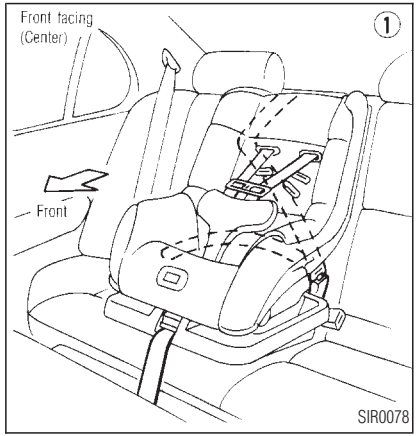

1. Position the child restraint on the seat. The direction of the child restraint depends on the type of the child restraint and the size of the child. Always follow the restraint manufacturer's instructions.

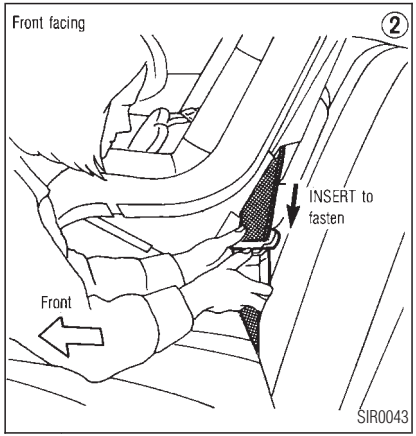

2. Route the seat belt tongue through the child restraint and insert it into the buckle until you hear and feel the latch engage. Be sure to follow the child restraint manufacturer's instructions for belt routing.

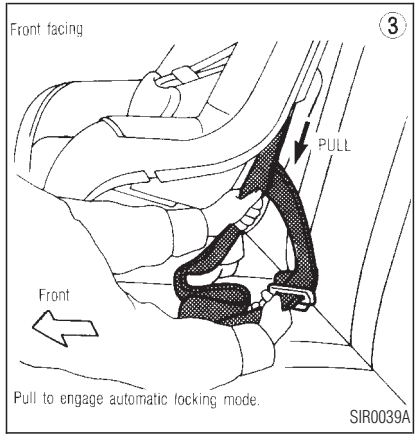

3. Pull on the shoulder belt until all of the belt is fully extended. At this time, the belt retractor is in the automatic locking mode (child restraint mode). It reverts back to emergency locking mode when the belt is fully retracted.

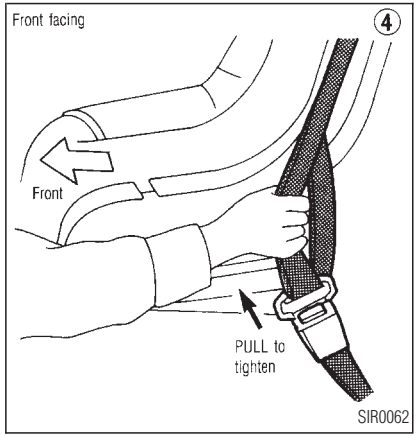

4. Allow the belt to retract. Pull up on the belt to remove any slack in the belt.

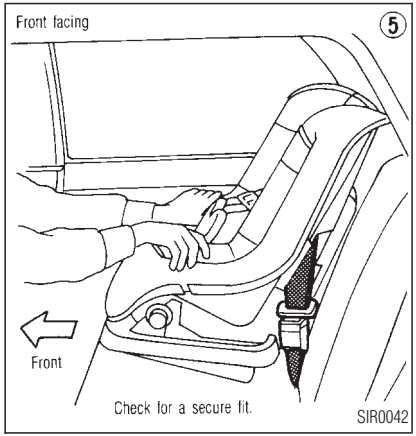

5. Before placing the child in the child restraint, use force to tilt the child restraint from side to side, and tug it forward to make sure that it is securely held in place.
6. Check that the retractor is in the automatic locking mode by trying to pull more belt out of the retractor. If you cannot pull any more belt webbing out of the retractor, the belt is in the automatic locking mode.
7. Check to make sure that the child restraint is properly secured prior to each use. If the lap belt is not locked, repeat steps 3 through 6.

After the child restraint is removed and the seat belt is allowed to wind back into the retractor, the automatic locking mode (child restraint mode) is canceled; the seat belt only locks during a sudden stop or impact.

Rear facing

WARNING

- ***The three-point belt on your vehicle is equipped with a locking mode retractor which must be used when installing a child restraint.***
- ***Failure to do so will result in the child restraint not being properly secured. It could tip over or otherwise be unsecured and cause injury to the child in a sudden stop or collision.***

When you install a child restraint in a rear outboard or center seat, follow these steps:

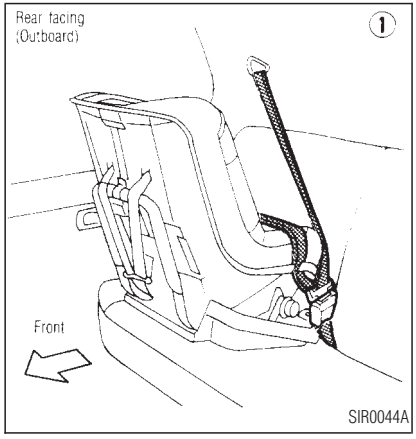

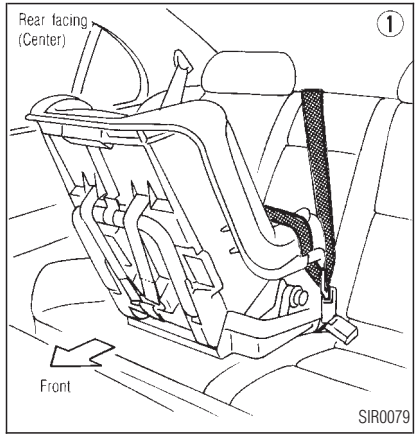

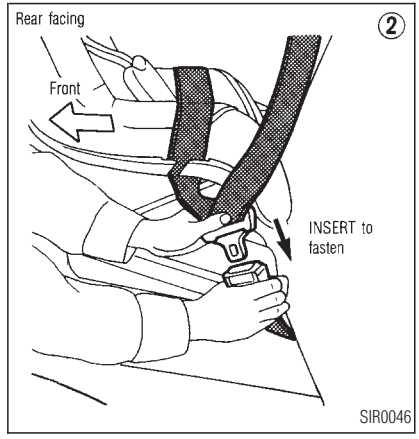

1. Position the child restraint on the seat. The direction of the child restraint depends on the type of the child restraint and the size of the child. Always follow the restraint manufacturer's instructions.

2. Route the seat belt tongue through the child restraint and insert it into the buckle until you hear and feel the latch engage. Be sure to follow the child restraint manufacturer's instructions for belt routing.

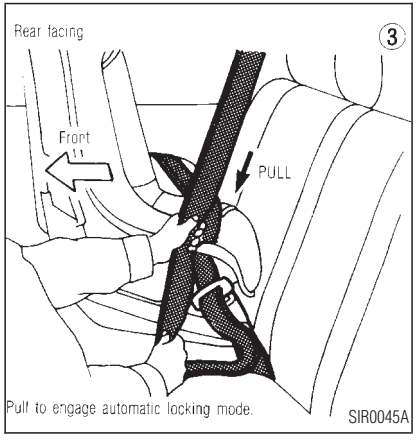

3. Pull on the shoulder belt until all of the belt is fully extended. At this time, the belt retractor is in the automatic locking mode (child restraint mode). It reverts back to emergency locking mode when the belt is fully retracted.

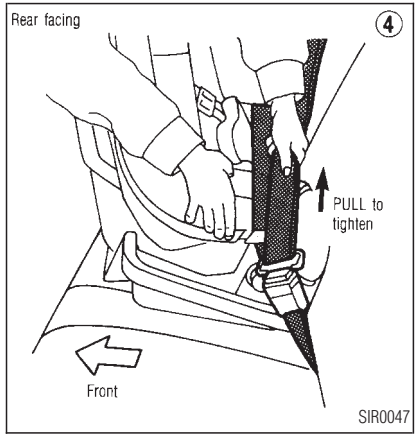

4. Allow the belt to retract. Pull up on the belt to remove any slack in the belt.

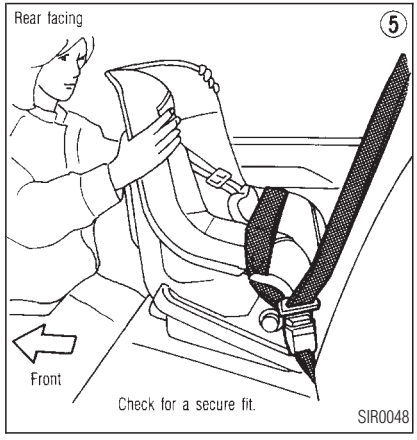

5. Before placing the child in the child restraint, use force to tilt the child restraint from side to side, and tug it forward to make sure that it is securely held in place.
6. Check that the retractor is in the automatic locking mode by trying to pull more belt out of the retractor. If you cannot pull any

more belt webbing out of the retractor, the belt is in the automatic locking mode.

7. Check to make sure that the child restraint is properly secured prior to each use. If the lap belt is not locked, repeat steps 3 through 6.

After the child restraint is removed and the seat belt is allowed to wind back into the retractor, the automatic locking mode (child restraint mode) is canceled; the seat belt only locks during a sudden stop or impact.

TOP STRAP CHILD RESTRAINT

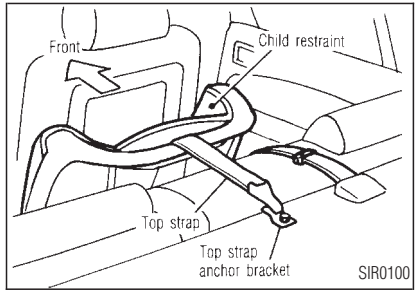

If your child restraint has a top strap, it must be secured to the provided anchor point. Anchor bracket hardware must be installed. The top strap anchor bracket hardware is available through your INFINITI dealer.

Part #88894-89900

Secure the child restraint with the lap portion of a three-point belt and latch the top strap hook onto the appropriate anchor bracket. To install the anchor bracket, a metric bolt of the dimensions listed below must be used.

Bolt diameter: 8.0 mm

Bolt length: more than 1.18 in (30 mm)

Thread pitch: 1.25 mm

Secure the top strap to the attaching bolt which provides the straightest installation of the top strap.

When you install a child restraint with a top strap in a rear outboard seat, you cannot use the rear sun shade. To install a child restraint, first lower the screen. For additional information, see "Rear sun shade" in the "2. Instruments and controls" section.

WARNING

Child restraint anchor points are designed to withstand only those loads imposed by correctly fitted child re-

straints. Under no circumstances are they to be used for adult seat belts or harnesses.

Anchor point locations

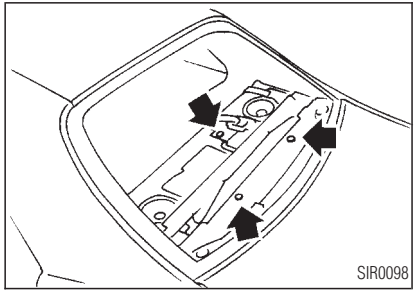

Anchor points are located under the rear parcel shelf finisher.

When installing a top strap child restraint on the rear seat for the first time, consult your INFINITI dealer for details.

INSTALLATION ON FRONT PASSENGER SEAT

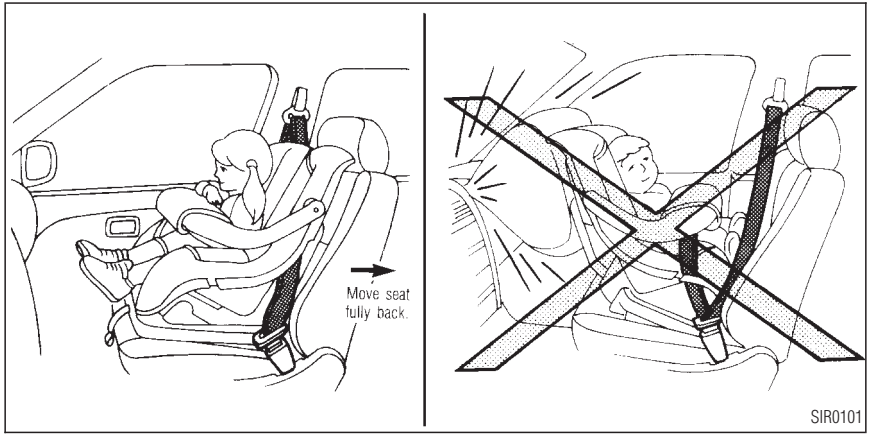

WARNING

- *Never install a rear facing child restraint in the front passenger seat. Supplemental air bags inflate with great force. A rear facing child restraint could be struck by the supplemental air bag in a crash and could seriously injure or kill your child.*
- *INFINITI recommends that child restraints be installed in the rear seat. However, if you must install a front facing child restraint in the front passenger seat, move the passenger seat to the rear most position.*
- *A child restraint with a top strap should not be used in the front passenger seat.*
- *The three-point belt in your vehicle is equipped with a locking mode retractor which must be used when installing a child restraint.*

- ***Failure to use the retractor's locking mode may result in the child restraint not being properly secured. The child restraint could tip over or otherwise be unsecured and cause injury to the child in a sudden stop or collision.***

If you must install a child restraint in the front seat, follow these steps:

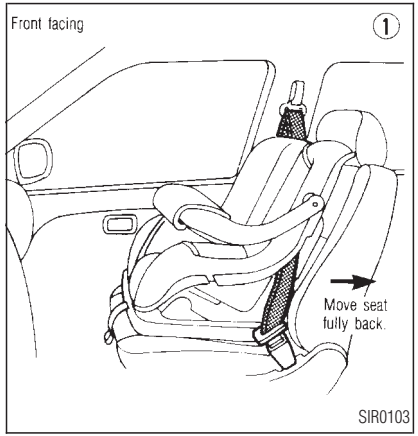

1. Position the child restraint on the front passenger seat. **It should be placed in a front facing direction only.** Move the seat to the rear most position. Always follow the child restraint manufacturer's instructions. **Child restraints for infants must be used in the rear facing direction and therefore must not be used in the front seat.**

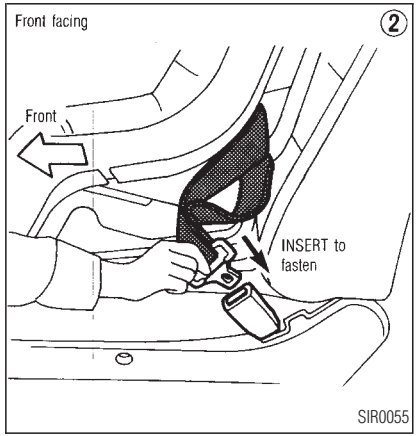

2. Route the seat belt tongue through the child restraint and insert it into the buckle until you hear and feel the latch engage. Be sure to follow the child restraint manufacturer's instructions for belt routing.

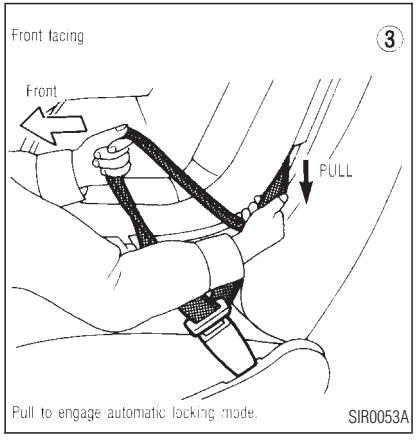

3. Pull on the shoulder belt until all of the belt is fully extended. At this time, the belt retractor is in the automatic locking mode (child restraint mode). It reverts back to emergency locking mode when the belt is fully retracted.

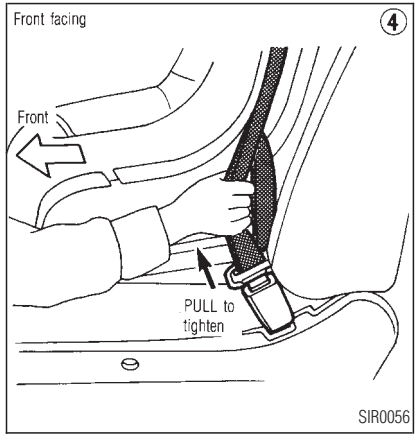

4. Allow the belt to retract. Pull up on the belt to remove any slack in the belt.

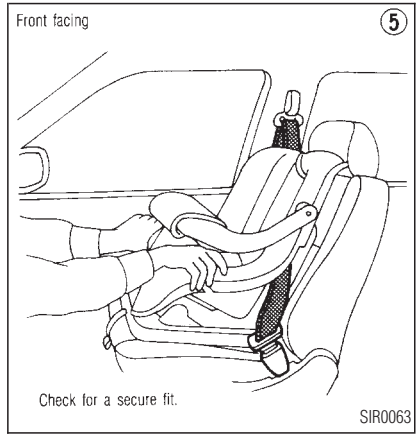

5. Before placing the child in the child restraint, use force to tilt the child restraint from side to side, and tug it forward to make sure that it is securely held in place.
6. Check that the retractor is in the automatic locking mode by trying to pull more belt out of the retractor. If you cannot pull any

more belt webbing out of the retractor, the belt is in the automatic locking mode.

7. Check to make sure that the child restraint is properly secured prior to each use. If the lap belt is not locked, repeat steps 3 through 6.

After the child restraint is removed and the seat belt is allowed to wind back into the retractor, the automatic locking mode (child restraint mode) is canceled; the seat belt only locks during a sudden stop or impact.

2 INSTRUMENTS AND CONTROLS

Instrument panel 2-2
Meters and gauges..... 2-3
Speedometer and odometer 2-4
Tachometer..... 2-4
Engine coolant temperature gauge..... 2-5
Fuel gauge 2-5
Warning/indicator lights and chimes 2-7
Checking bulbs 2-7
Warning lights 2-8
Indicator lights 2-10
Chimes..... 2-13
Security systems 2-14
Theft warning 2-14
Infiniti Vehicle Immobiliser System 2-15
Windshield wiper and washer switch..... 2-16
Switch operation..... 2-16
Stopping position adjustment mechanism 2-17
Rear window and outside mirror defogger switch 2-18
Headlight and turn signal switch 2-18
Xenon headlights..... 2-18
Headlight switch 2-19
Turn signal switch..... 2-22
Front fog light switch 2-23
Hazard warning flasher switch 2-23
Horn..... 2-24
Heated seats (if so equipped) 2-24
Traction control system (TCS) cancel switch 2-25
Active damper suspension mode select switch (if so equipped) 2-25
Auto mode..... 2-26
Sport mode..... 2-26
Power socket..... 2-26
Cigarette lighters and ashtrays..... 2-27
Storage 2-28
Cup holders 2-28
Glove box 2-29
Console box..... 2-29
Windows..... 2-30
Power windows 2-30

Sunroof 2-31
Automatic sunroof 2-32
Rear sun shade 2-33
Clock 2-34
Adjusting the time 2-34
Interior lights 2-34
Personal lights 2-35
Front 2-35
Rear 2-36
Vanity mirror lights 2-36
Trunk light 2-36
Integrated HomeLink® Universal Transceiver 2-36
Programming HomeLink® 2-38
Canadian programming 2-38
Operating the integrated HomeLink® Universal Transceiver 2-39
Programming problem diagnosis 2-39
Clearing the programmed information 2-39
Rolling code programming 2-39
Programming a single HomeLink® button 2-40
If your vehicle is stolen 2-40
Infiniti communicator (if so equipped) 2-41
Infiniti communicator purpose 2-42
Infiniti communicator outline 2-42
Safe operating recommendations 2-42
Quick summary 2-43
Functions 2-43
Function and description 2-45
Infiniti communicator indicator description 2-49
Operation of optional handset 2-50
Payment for Infiniti communicator use 2-50
System limitations 2-50
False activations and password selections 2-53
Steering switch for cellular phone (Models with Infiniti Communicator) 2-53
Switch operations 2-54

INSTRUMENTS AND CONTROLS

INSTRUMENT PANEL

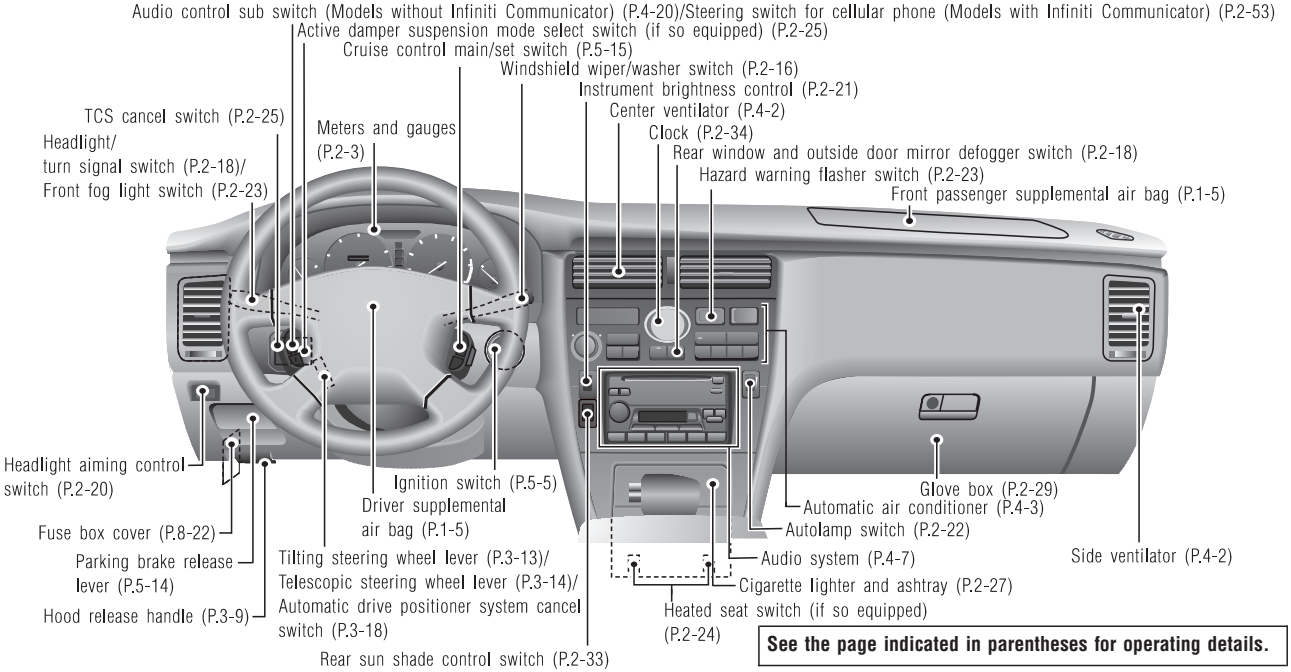

METERS AND GAUGES

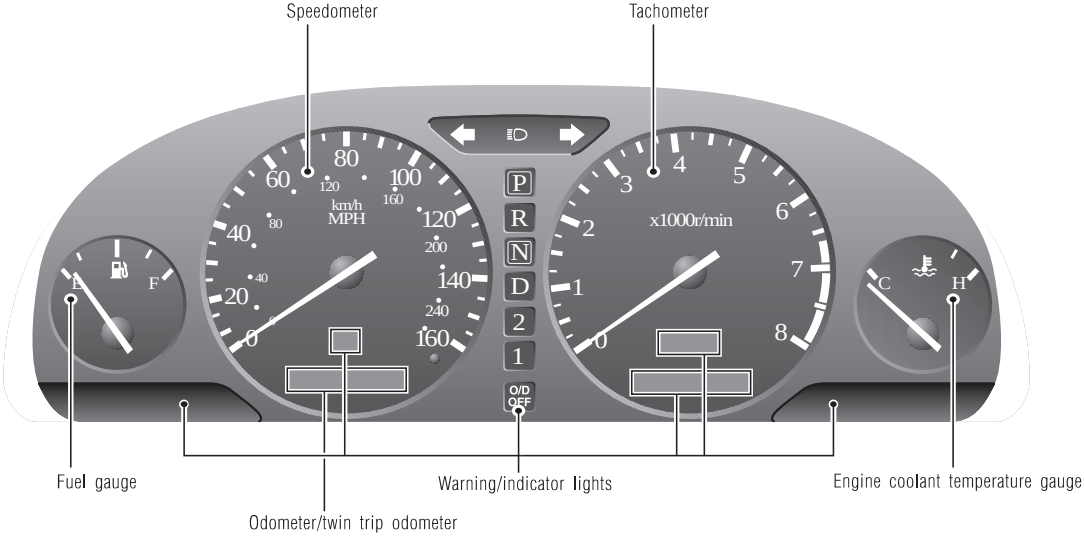

SII0213

SPEEDOMETER AND ODOMETER

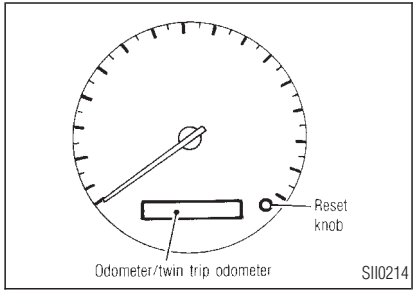

Speedometer

The speedometer indicates vehicle speed.

Odometer/twin trip odometer

The odometer/twin trip odometer are displayed when the ignition key is in the ON position.

The odometer records the total distance the vehicle has been driven.

The twin trip odometer records the distance of individual trips.

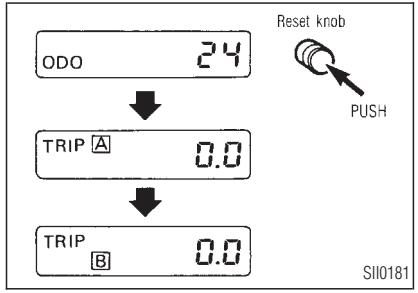

Changing the display:

Pushing the reset knob changes the display as follows:
ODO → TRIP A → TRIP B → ODO

Resetting the trip odometer:

Pushing the reset knob for more than 1 second resets the trip odometer to zero.

TACHOMETER

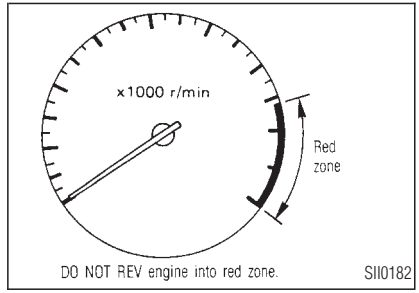

The tachometer indicates engine speed in revolutions per minute (r/min).

CAUTION

When engine speed approaches the red zone, shift to a higher gear. Operating the engine in the red zone may cause serious engine damage.

ENGINE COOLANT TEMPERATURE GAUGE

The gauge indicates the engine coolant temperature.

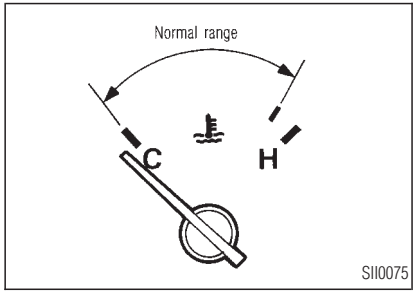

The engine coolant temperature will vary with the outside air temperature and driving conditions.

⚠ *CAUTION*

If the gauge indicates engine coolant temperature over the normal range, stop the vehicle as soon as safely possible. If the engine is overheated, continued operation of the vehicle may seriously damage the engine. See "If your vehicle overheats" in the "6. In case of emergency" section.

FUEL GAUGE

The gauge indicates the approximate fuel level in the tank.

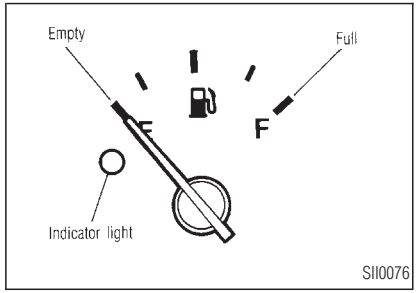

The gauge may move slightly during braking, turning, acceleration, or going up or down hill.

The gauge needle is designed to remain in approximately the same position, even when the ignition key is turned OFF.

Refill the fuel tank before the gauge registers Empty.

The indicator light comes on when the fuel tank is getting low. Refuel as soon as it is convenient, preferably before the gauge

reaches E. There will be a small reserve of fuel in the tank when the fuel gauge needle reaches E.

CAUTION

If the vehicle is driven with the fuel level very low, the malfunction indicator light may come on. Refuel as soon as possible. After driving for a while, the light should remain off. If the light remains on, have the vehicle inspected by an authorized INFINITI dealer. For additional information, see "Malfunction indicator light (MIL)" later in this section.

WARNING/INDICATOR LIGHTS AND CHIMES

	Engine oil pressure warning light		Stop/tail warning light	SLIP	Slip indicator light
	Charge warning light	O/D OFF	Overdrive off indicator light	SPORT	Sport mode indicator light (if so equipped)
	Door open warning light		Turn signal/hazard indicator lights	REDIAL	Infiniti Communicator redial indicator light (if so equipped)
	Seat belt warning light		High beam indicator light (Blue)	NO SERVICE	Infiniti Communicator no service indicator light (if so equipped)
AIR BAG	Supplemental air bag warning light	CRUISE	Cruise main switch indicator light		Infiniti Communicator “Mayday” emergency button indicator light (if so equipped)
	Low washer fluid warning light	SET	Cruise set switch indicator light		Infiniti Communicator “Information” button indicator light (if so equipped)
or BRAKE	Brake warning light	SERVICE ENGINE SOON	Malfunction indicator light (MIL)		
ABS or	Anti-lock brake system warning light	TCS OFF	Traction control system indicator light		

CHECKING BULBS

Apply the parking brake and turn the ignition key to ON without starting the engine. The following lights will come on:

, or BRAKE , , SERVICE ENGINE SOON ,

ABS or , SLIP , TCS OFF

The following lights come on briefly and then go off:

AIR BAG , O/D OFF , REDIAL , NO SERVICE , ,

If any light fails to come on, it may indicate a burned-out bulb or an open circuit in the electrical system. Have the system repaired promptly.

WARNING LIGHTS

Engine oil pressure warning light

This light warns of low engine oil pressure. If the light flickers or comes on during normal driving, pull off the road in a safe area, stop the engine **immediately** and call an INFINITI dealer or other authorized repair shop.

The oil pressure warning light is not designed to indicate a low oil level. Use the dipstick to check the oil level. See "Engine oil" in the "8. Do-it-yourself" section.

CAUTION

Running the engine with the oil pressure warning light on could cause serious damage to the engine almost immediately. Turn off the engine as soon as it is safe to do so.

Charge warning light

If the light comes on while the engine is running, it may indicate that there is something wrong with the charging system. Turn the engine off and check the alternator belt. If the belt is loose, broken, missing or if the light remains on, see your INFINITI dealer immediately.

CAUTION

Do not continue driving if the belt is loose, broken or missing. See "If your vehicle overheats" in the "6. In case of emergency" section.

Door open warning light

This light comes on when any of the doors are not closed securely while the ignition key is ON.

Seat belt warning light and chime

The light and chime remind you to fasten seat belts. The light illuminates whenever the ignition key is turned to ON, and will remain illuminated until the driver's seat belt is fastened. (When the ignition key is turned to ON with the driver's seat belt fastened, the light will illuminate for about 7 seconds and then go off.) At the same time, the chime will sound for about 6 seconds unless the driver's seat belt is securely fastened.

See "Seat belts" in the "1. Seats, restraints and supplemental air bag systems" section for precautions on seat belt usage.

If the seat belt warning light blinks, there may be something wrong with the pre-tensioner seat belt. In this case, the pre-tensioner will not operate properly. Have it checked by your INFINITI dealer.

For additional information, see "Supplemental

restraint system" in the "1. Seats, restraints and supplemental air bag systems" section.

AIR BAG *Supplemental air bag warning light*

After turning the ignition key to the ON position, the supplemental air bag warning light illuminates. The supplemental air bag warning light will turn off after about 7 seconds if the system is operational.

If any of the following conditions occur, the supplemental air bag needs servicing and your INFINITI must be taken to your nearest authorized INFINITI dealer.

- The supplemental air bag warning light does not come on and remain on for 7 seconds and then go off as described above.
- The supplemental air bag warning light flashes intermittently or remains on (after 7 seconds).
- The supplemental air bag warning light does not come on at all.

Unless checked and repaired, the supplemental restraint system may not function properly.

For additional information, see "Supplemental restraint system" in the "1. Seats, restraints and supplemental air bag systems" section.

WARNING

If the supplemental air bag warning light is on, it could mean that the supplemental air bag or supplemental side air bag systems will not operate in an accident.

Low washer fluid warning light

This light comes on when the washer tank fluid is at a low level. Add washer fluid as necessary. See "Window washer fluid" in the "8. Do-it-yourself" section.

or BRAKE *Brake warning light*

This light functions for both the parking brake and the foot brake systems.

Parking brake indicator:

When the ignition key is in the ON position, the light comes on when the parking brake is applied.

Low brake fluid warning light:

When the ignition key is in the ON position, the light warns of a low brake fluid level. If the light comes on while the engine is running with the parking brake not applied, stop the vehicle and perform the following:

1. Check the brake fluid level. Add brake fluid as necessary. See "Brake fluid" in the "8. Do-it-yourself" section.
2. If the brake fluid level is correct:

Have the warning system checked by an INFINITI dealer.

WARNING

- ***Your brake system may not be working properly if the warning light is on. Driving could be dangerous. If you judge it to be safe, drive carefully to the nearest service station for repairs. Otherwise, have your vehicle towed.***
- ***Pressing the brake pedal with the engine stopped and/or low brake fluid level may increase your stopping distance and braking will require greater pedal effort as well as pedal travel.***
- ***If the brake fluid level is below the MIN mark on the brake fluid reservoir, do not drive until the brake system has been checked at an INFINITI dealer.***

ABS or (ABS) *Anti-lock brake warning light*

If the light comes on while the engine is running, it may indicate there is something wrong with the anti-lock portion of the brake system. In either case, have the system checked by your INFINITI dealer.

If an abnormality occurs in the system, the anti-lock function will cease but the ordinary brakes will continue to operate normally.

If the light comes on while you are driving, contact your INFINITI dealer for repair.

Stop/tail warning light

If the light comes on with the engine running and with the light switch on, or when the brake pedal is depressed, one or more stop/tail light bulbs are burned out. Replace the stop/tail light bulb.

INDICATOR LIGHTS

O/D OFF *Overdrive off indicator light*

This light comes on during driving when the overdrive switch is pressed to prevent overdrive operation.

The O/D OFF indicator light comes on for 2 seconds each time the ignition key is turned ON. This shows the light is functioning properly.

If the O/D OFF indicator light blinks for approximately 8 seconds after coming on for 2 seconds, have your INFINITI dealer check the transmission and repair it if necessary.

The automatic transmission is equipped with an electronic fail-safe mode. This system allows the vehicle to be driven even in the

event of damage to the electrical circuits. If this occurs, the gears automatically engage and lock into third gear.

See the “Driving the vehicle” in the “5. Starting and driving” section for fail-safe before visiting your INFINITI dealer.

Turn signal/hazard indicator lights

The light flashes when the turn signal switch lever or hazard switch is turned on.

High beam indicator light (Blue)

This light comes on when the headlight high beam is on and goes out when the low beam is selected.

CRUISE

Cruise main switch indicator light

The light comes on when the main switch is pushed. The light goes out when the main switch is pushed again. While the cruise main switch indicator light comes on, the cruise control system is operational.

SET

Cruise set switch indicator light

The light comes on while the vehicle speed is controlled by the cruise control system. If the light flickers while the engine is running, it may indicate there is something wrong with the cruise control system. Have the system checked by your INFINITI dealer.

SERVICE ENGINE SOON

Malfunction indicator light (MIL)

If the malfunction indicator light comes on steady or blinks while the engine is running, it may indicate a potential emission control problem.

The malfunction indicator light may also come on steady or blink if the fuel filler cap has not been closed tightly or if the fuel tank is nearly empty. Check to make sure the fuel cap is secure and that you have at least 3 US gallons (14 liters) of fuel in the fuel tank.

After driving for a while, the light should remain off if no other potential emission control system problem exists.

Operation

The malfunction indicator light will come on in one of two ways:

- Malfunction indicator light on steady — An emission control system malfunction has been detected. Have the vehicle inspected by an authorized INFINITI dealer. You do not need to have your vehicle towed to the dealer.
- Malfunction indicator light blinking — An engine misfire has been detected which may damage the emission control system. To reduce or avoid emission control system damage:

  a) Do not drive at speeds above 45 MPH (72 km/h).

b) Avoid hard acceleration or deceleration.
c) Avoid steep uphill grades.
d) If possible, reduce the amount of cargo being hauled or towed.

The malfunction indicator light may stop blinking and come on steady.

Have the vehicle inspected by an authorized INFINITI dealer. You do not need to have your vehicle towed to the dealer.

CAUTION

Continued vehicle operation without having the emission control system checked and repaired as necessary could lead to poor driveability, reduced fuel economy, and possible damage to the emission control system.

TCS OFF *Traction control system indicator light*

When the traction control system switch is off, this light comes on. When the traction control system indicator light and slip indicator light come on with the traction control system switch turned on, this light alerts the driver to the fact that the traction control system's fail-safe mode is operating i.e. that the traction control system is temporarily out of order.

Have the system checked by your INFINITI dealer. If an abnormality occurs in the system, the traction control function will be canceled but the vehicle can still be driven. For additional information, see "Traction control system" in the "5. Starting and driving" section.

SLIP *Slip indicator light*

This indicator will blink when the traction control system is operating, thus alerting the driver to the fact that the road surface is slippery and the vehicle is nearing its traction limits.

SPORT *Sport mode indicator light (if so equipped)*

This light comes on when the active damper suspension mode select switch is set to the SPORT position.

REDIAL *Infiniti Communicator redial indicator light (if so equipped)*

After turning the ignition key to the ON position, the redial indicator light will illuminate for up to 30 seconds and then turn off.

This indicator light comes on when the initial connection is not successful. The Infiniti Communicator is attempting to redial to contact the Communicator Response Center. The redial indicator may blink before the button indicator blinks. See "Infiniti Communicator" later in this section.

Infiniti Communicator no service indicator light (if so equipped)

After turning the ignition key to the ON position, the no service indicator light will illuminate for up to 30 seconds and then turn off.

This indicator light comes on when the cellular phone is outside of cellular phone transmission range. The Infiniti Communicator will not be able to contact the Communicator Response Center. See “Infiniti Communicator” later in this section.

Infiniti Communicator “Mayday” emergency button indicator light (if so equipped)

After turning the ignition key to the ON position, the “Mayday” emergency button indicator light will illuminate for up to 30 seconds and then turn off if the system is operational.

This button indicator light comes on when the “Mayday” emergency button is pressed. When the light is blinking, Infiniti Communicator is trying to acquire an available cellular channel. When the light is ON, the system is connected to a cell and is communicating information to the Communicator Response Center. See “Infiniti Communicator” later in this section.

Infiniti Communicator “Information” button indicator light (if so equipped)

After turning the ignition key to the ON position, the “Information” button indicator light will illuminate for up to 30 seconds and then turn off if the system is operational.

This button indicator light comes on when the “Information” button is pressed. When the light is blinking, Infiniti Communicator is trying to acquire an available cellular channel. When the light is ON, the system is connected to a cell and is communicating information to the Communicator Response Center. See “Infiniti Communicator” later in this section.

CHIMES

Key reminder chime

The chime will sound if the driver side door is opened while the key is left in the ignition switch (ignition switch is turned off). Remove the key and take it with you when leaving the vehicle.

Light reminder chime

A chime will sound when the driver side door is opened if the light switch is in the or position (ignition switch is turned off).

Turn the light switch off when you leave the vehicle.

Brake pad wear warning

The disc brake pads have audible wear warn-

ings. When a brake pad requires replacement, it will make a high pitched scraping sound when the vehicle is in motion whether or not the brake pedal is depressed. Have the brakes checked as soon as possible if the warning sound is heard.

SECURITY SYSTEMS

Your vehicle has two types of security system, as follows:

- Theft warning
- Infiniti Vehicle Immobiliser System

The security condition will be shown by the security indicator light.

THEFT WARNING

The theft warning system provides visual and audio alarm signals to deter theft of the vehicle.

Security indicator light

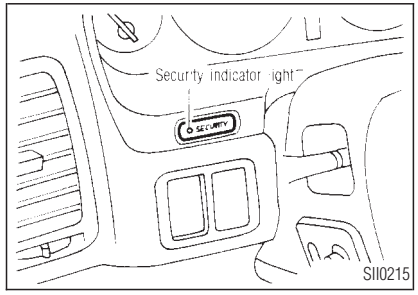

How to activate the theft warning system

1. Close all windows.

The system can be activated even if the windows are open.

2. Remove the key from the ignition switch.
3. Close and lock all doors, hood and trunk lid. The doors can be locked either with a key, multi-remote controller or door lock knob.
4. Confirm that the security indicator light comes on. The security light glows for about 30 seconds and then blink. The system is now activated. If, during this 30 second time period, the door or trunk lid is unlocked by the key or the multi-remote controller, or the ignition key is turned to ACC or ON, the system will not activate. However, when the trunk lid is closed after being unlocked with a key or multi-remote controller, the system returns to the armed phase.

- **If the key is turned slowly toward the front of the vehicle when locking the door, the system may not activate. If the key is returned beyond the vertical position toward the rear of the vehicle to remove the key, the system may be deactivated. When the indicator light fails to glow for 30**

seconds, unlock the door once and lock it again.

- **Even when the driver and/or passengers are in the vehicle, the system will activate with all doors, hood, and trunk lid locked and ignition key off. When turning the ignition to ACC, the system will be released.**

Theft warning system operation

The warning system will give the following alarm:

- the headlights blink and the horn sounds intermittently.
- the alarm automatically turns off after 2 to 3 minutes; however, the alarm will reactivate if the vehicle is tampered with again.

The alarm is activated by:

- Unlocking the door or opening the trunk lid without using the key or multi-remote controller. (Even if the door is opened by releasing the door inside lock knob or the trunk lid is opened by operating the trunk lid release switch, the alarm is activated.)
- Opening the hood.

How to stop alarm

The alarm will stop by unlocking a door or trunk lid with the key or by pushing either the unlock or trunk lid release button on the multi-remote controller. The alarm will not stop if the ignition switch is turned to ACC or ON.

If the system does not operate as described above, have it checked by your INFINITI dealer.

INFINITI VEHICLE IMMOBILISER SYSTEM

The Infiniti Vehicle Immobiliser System will not allow the engine to start without the use of the registered Infiniti Vehicle Immobiliser System key.

If the engine fails to start using the registered Infiniti Vehicle Immobiliser System key (for example, when interference is caused by another Infiniti Vehicle Immobiliser System key, an automated toll road device or automated payment device on the key ring), restart the engine using the following procedures:

1. Leave the ignition switch in the ON position for approximately 5 seconds.
2. Turn the ignition switch to the OFF or LOCK position, and wait approximately 5 seconds.
3. Repeat step 1 and 2.
4. Restart the engine while holding the device (which may have caused the interference) separate from the registered Infiniti Vehicle Immobiliser System key.

If the no start condition re-occurs, INFINITI recommends placing the registered Infiniti Vehicle Immobiliser System key on a separate key ring to avoid interference from other devices.

Statement related to section 15 of FCC rules for Infiniti Vehicle Immobiliser System
(CONT ASSY - IMMOBILISER, ANT ASSY - IMMOBILISER)

This device complies with part 15 of the FCC Rules and RSS-210 of Industry Canada. Operation is subject to the following two conditions;

(1) This device may not cause harmful interference, and (2) this device must accept any interference received, including interference that may cause undesired operation of the device.

CHANGES OR MODIFICATIONS NOT EXPRESSLY BY THE MANUFACTURE FOR COMPLIANCE COULD VOID THE USER'S AUTHORITY TO OPERATE THE EQUIPMENT.

Security indicator light

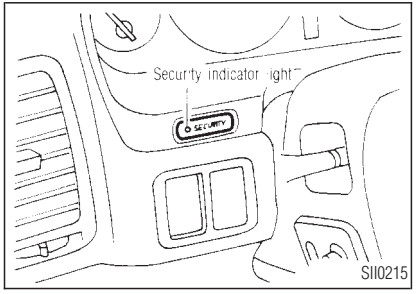

This light blinks whenever the ignition switch is in the LOCK, OFF or ACC position. This function indicates the security systems equipped on the vehicle are operational.

If the Infiniti Vehicle Immobiliser System is malfunctioning, this light will remain on while the ignition key is in the ON position.

If the light still remains on and/or the engine will not start, see your INFINITI dealer for Infiniti Vehicle Immobiliser System service as soon as possible. Please bring all Infiniti Vehicle Immobiliser System keys that you have when visiting your INFINITI dealer for service.

WINDSHIELD WIPER AND WASHER SWITCH

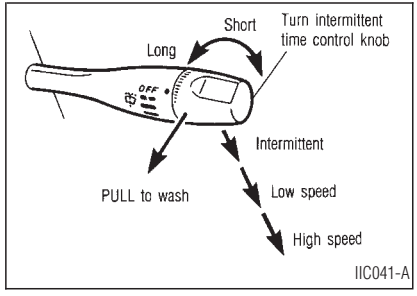

SWITCH OPERATION

The windshield wiper and washer operates when the ignition key is in the ACC or ON position.

Push the lever down to operate the wiper. Pull the lever toward you to operate the washer.

The intermittent operation time can be adjusted by turning the knob as follows:

- While driving: from 0.4 to 12 seconds
- While stopped: from 4 to 20 seconds

CAUTION

The following could damage the washer system:

- ***Do not operate the washer continuously for more than 30 seconds.***
- ***Do not operate the washer if the reservoir tank is empty.***

WARNING

In freezing temperatures the washer solution may freeze on the windshield and obscure your vision which may lead to an accident. Warm windshield with the defroster before you wash the windshield.

STOPPING POSITION ADJUSTMENT MECHANISM

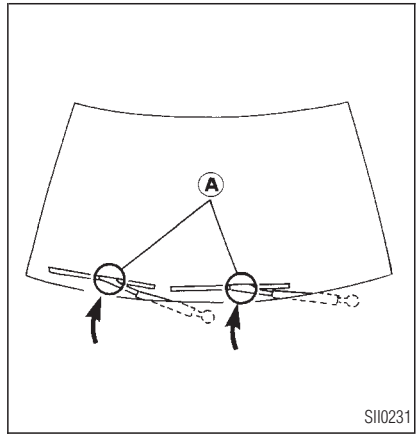

The stopping position of the windshield wiper can be set manually, if necessary.

1. With the wiper stopped at the pre-set position, hold part (A) that connects the arm and the blade on each wiper set.

2. Apply force to the moving direction of the wiper, to the next locking position.

When the windshield wiper is used in snow, the stopping position of the blades may automatically be adjusted to compensate for the snow accumulation on the windshield. This should not be regarded as abnormal. In case the wiper stops operating, turn the wiper switch off, remove the accumulated snow, and turn the wiper switch back on. The wiper will function normally.

REAR WINDOW AND OUTSIDE MIRROR DEFOGGER SWITCH

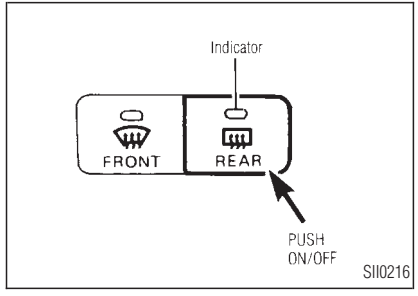

To defog/defrost the rear window glass and the outside mirrors, start the engine and push the switch on. (The indicator light will come on.) Push the switch again to turn the defogger off.

It will automatically turn off in approximately 15 minutes.

CAUTION

When cleaning the inner side of the window, be careful not to scratch or damage the rear window defogger.

HEADLIGHT AND TURN SIGNAL SWITCH

XENON HEADLIGHTS

WARNING

HIGH VOLTAGE

- ***When xenon headlights are on, they produce a high voltage. To prevent an electric shock, never attempt to modify or disassemble. Always have your xenon***

headlights replaced at an authorized INFINITI dealer.

- ***Xenon headlights provide considerably more light than conventional headlights. If they are not correctly aimed, they might temporarily blind an oncoming driver or the driver ahead of you and cause a serious accident. If headlights are not aimed correctly, immediately take your vehicle to an authorized INFINITI dealer and have the headlights adjusted correctly.***

When the xenon headlight is initially turned on, its brightness or color varies slightly. However, the color and brightness will soon stabilize.

- **The life of xenon headlights will be shortened by frequent on-off operation. It is generally desirable not to turn off the headlights for short intervals, (for example, when the vehicle stops at a traffic signal). Even when the daytime running lights are active (Canada only), the xenon headlights do not turn on. This way the life of the xenon headlights is not reduced.**
- **If the xenon headlight bulb is close to burning out, the brightness will drastically decrease, the light will start blinking, or the color of the light will become reddish. If one or more of the above signs appear, contact an INFINITI dealer.**

HEADLIGHT SWITCH

Lighting

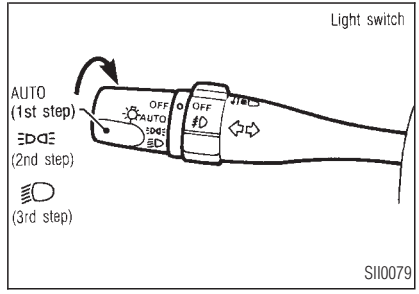

Turn the switch to the AUTO position:

When the ignition key is in the ON position, the parking light, headlight, instrument lights and other lights turn on automatically, depending on the brightness of the surroundings. When the ignition key is turned to the ACC, OFF or LOCK position with the autolamp switch in the maximum short position, the light will turn off automatically. See later in

this section for autolamp shut-off delay.

When the light switch is turned to the position, the headlight low or high beam will turn off.

Turn the switch to the position:

The parking, side marker, tail, license plate and instrument lights will come on.

Turn the switch to the position:

Headlights will come on and all the other lights remain on.

Headlight aiming control

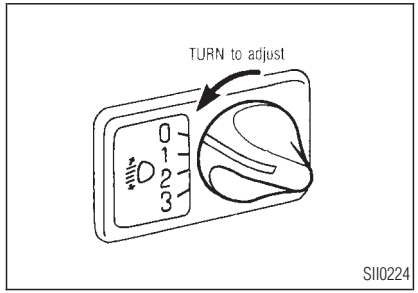

Depending on the number of occupants in the vehicle and the load it is carrying, the headlight axis may be higher than desired. If the vehicle is traveling on a hilly road, the headlights may directly hit the rearview mirror of the vehicle ahead or the windshield of the oncoming vehicle. The light axis can be lowered with the operation of the switch.

The larger the number designated on the switch, the lower the axis.

When traveling with no heavy load or on a flat road, select position 0.

Xenon headlights are extremely bright compared to conventional headlights. If the xenon headlights hit the rearview mirror of the vehicle ahead or the windshield of the oncoming vehicle, the driver of these vehicles may have difficulty driving because of the brightness. Use the headlight aiming control switch to lower the light axis. See earlier in this section for information on xenon headlights.

Instrument brightness control

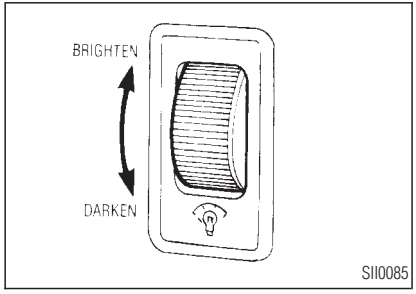

The instrument brightness control operates when the light switch is in the AUTO (ignition key is in the ON), or position.

Turn the control to adjust the brightness of instrument panel lights and power window switch lights.

When the control is turned in the upper direction until a click sound is heard, the light intensity will be at maximum. When the control is turned in the lower direction until a click sound is heard, the light will be turned off.

Headlight beam select

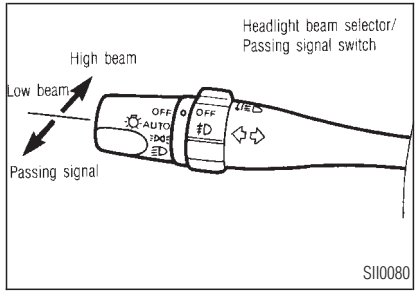

To select the high beam, push the lever forward. Pull it back to select the low beam.

Passing signal

Pulling the lever toward you will flash the headlight high beam.

Daytime running light system (Canada only)

The headlights automatically illuminate at a reduced intensity when the engine is started with the parking brake released. The daytime running lights operate with the headlight switch in the OFF position or in the position. Turn the headlight switch to the position for full illumination when driving at night.

If the parking brake is applied before the engine is started, the daytime running lights do not illuminate. The daytime running lights illuminate once the parking brake is released. The daytime running lights will remain on until the ignition switch is turned off.

WARNING

When the daytime running light system is active, tail lights on your vehicle are not on. It is necessary at dusk to turn on your headlights. Failure to do so could cause an accident injuring yourself and others.

Autolamp shut-off delay

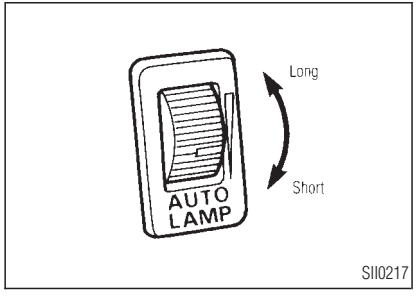

The length of time the autolamps stay on after the ignition key is turned to OFF while headlight switch is in the AUTO position depends on how far the autolamp switch is turned. If the switch is turned fully in the above direction, the headlights will stay on for a longer time (a few minutes).

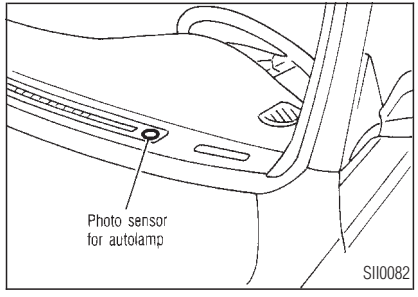

Be sure not to put anything on top of the photo sensor located on the top left-hand side of the instrument panel. The photo sensor controls the autolamp; if it is covered, the photo sensor reacts as if it is dark and the headlights will illuminate.

TURN SIGNAL SWITCH

Turn signal

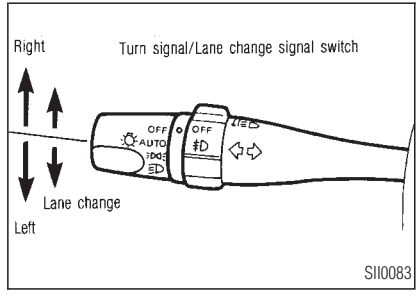

Move the lever up or down to signal the turning direction. When the turn is completed, the turn signals cancel automatically.

Lane change signal

To indicate a lane change, move the lever up

or down to the point where lights begin flashing.

FRONT FOG LIGHT SWITCH

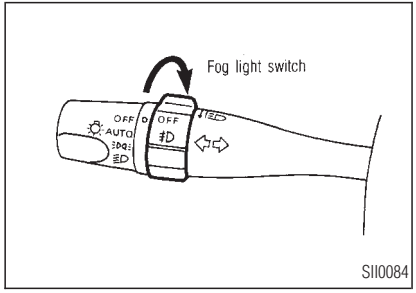

Turn the knob to activate the fog lights. The fog lights can only be activated when the headlight is turned on.

HAZARD WARNING FLASHER SWITCH

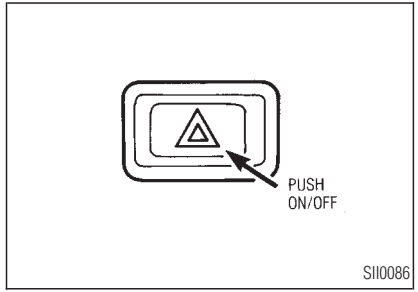

Push the switch on to warn other drivers when you must stop or park under emergency conditions. All turn signal lights will flash.

WARNING

- ***When stalled or stopped on the roadway under emergency conditions, move the vehicle well off the road.***
- ***Do not use the switch while moving on the highway unless unusual circumstances force you to drive so slowly that your vehicle might become a hazard to other traffic.***
- ***Turn signals do not work when the switch is operating.***

The flasher can be actuated with the ignition switch either off or on.

Some state laws may prohibit the use of the hazard warning flasher switch while driving.

HORN

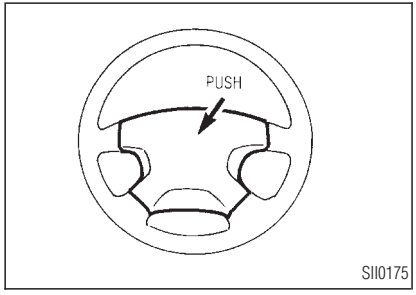

To sound the horn, push the center pad area of the steering wheel.

HEATED SEATS (if so equipped)

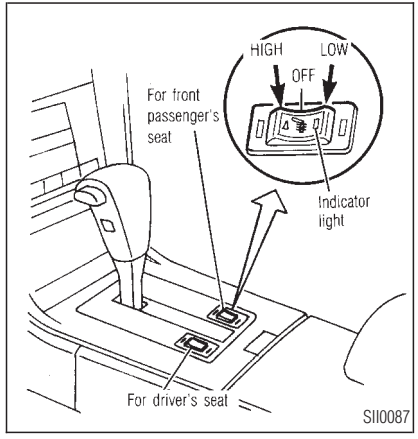

The front seats are warmed by built-in heaters. The switches located on the center console can be operated independently of each other.

1. Start the engine.
2. Push the low or high position of the switch, as desired, depending on the temperature. The indicator light in the switch will illuminate.

   The heater is controlled by a thermostat, automatically turning the heater on and off. The indicator light will remain on as long as the switch is on.
3. When the vehicle's interior is warmed or before you leave the vehicle, be sure to turn the switch off.

CAUTION

- ***Do not use the seat heater for extended periods or when no one is using the seat.***
- ***Do not put anything on the seat which insulates heat, such as a***

blanket, cushion, seat cover, etc. Otherwise, the seat may become overheated.

- ***Do not place anything hard or heavy on the seat or pierce it with a pin or similar object. This may result in damage to the heater.***
- ***Any liquid spilled on the heating seat should be removed immediately with a dry cloth.***
- ***When cleaning the seat, never use benzine, thinner, or any similar materials.***
- ***If any abnormalities are found or the heating seat does not operate, turn the switch off and have the system checked by your INFINITI dealer.***
- ***The battery could run down if the heater is operated while the engine is not running.***

TRACTION CONTROL SYSTEM (TCS) CANCEL SWITCH

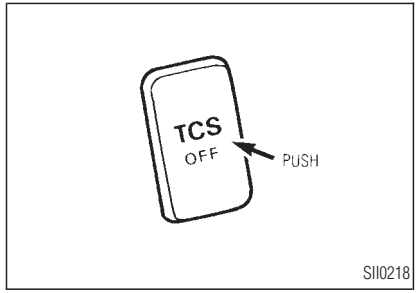

To cancel the Traction Control System (TCS), push the TCS cancel switch on. The indicator TCS OFF will come on. Push it again to turn it ON.

See “Traction control system” in the “5. Starting and driving” section.

ACTIVE DAMPER SUSPENSION MODE SELECT SWITCH (if so equipped)

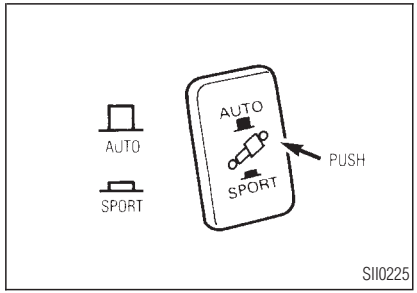

The active damper suspension controls damping force and restrains the movement of the vehicle body. It assures stable driving when the vehicle moves up and down on large rolling roads or when the vehicle rolls at cornering with a high centrifugal force.

The damping force of the shock absorbers can

be adjusted to the level you desire. Set the switch to the position you desire while the ignition switch is ON.

AUTO MODE

Set the switch to the AUTO position for normal driving. The damping force will automatically adjust according to the road surface and driving conditions.

SPORT MODE

Set the switch to the SPORT position when you desire a firm feeling all the time.

POWER SOCKET

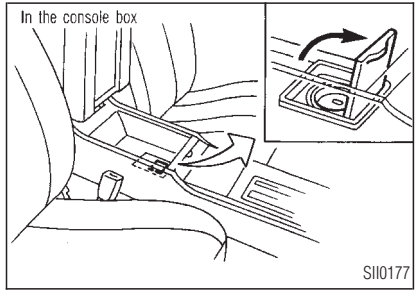

This power socket is used as a power source for some commercially available car phones, cellular phones, and other 12 volt electronic devices.

The power socket can be used when the ignition key is in ON or ACC. Open the cap when using the power socket.

⚠ *CAUTION*

- ***The socket and plug may be hot during or immediately after use.***
- ***This power socket is not designed for use with a cigarette lighter unit.***
- ***Do not use with accessories that exceed a 12 volt, 3.2A power draw.***
- ***Do not use for extended periods of time with the engine stopped. This could result in a discharged battery.***
- ***Push the plug in as far as it will go. If good contact is not made, the plug may overheat or the internal temperature fuse may blow.***

- ***Before inserting or disconnecting a plug, be sure to turn off the power switch of electrical accessory being used or the ignition switch of the vehicle.***
- ***When not in use, be sure to close the cap. Do not allow water to contact the socket.***

CIGARETTE LIGHTERS AND ASHTRAYS

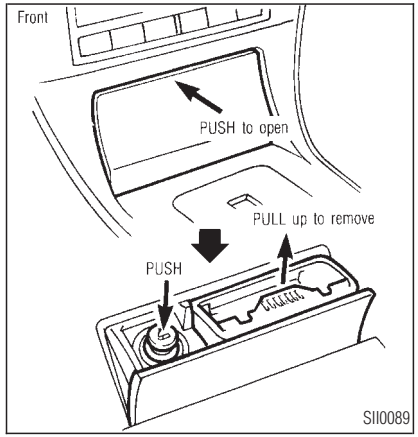

The cigarette lighter operates when the ignition switch is in the ACC or ON position.

Push the lighter in all the way, then release it. When the lighter is heated, it will spring out.

Return the lighter to its original position after use.

To empty the ashtray, pull up on the horizontal bar and remove the tray.

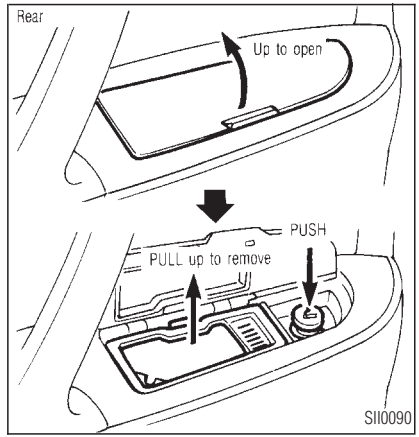

WARNING

The cigarette lighter should not be used while driving in order that full attention may be given to the driving operation.

CAUTION

The cigarette lighter socket is a power source for the cigarette lighter element only. The use of the cigarette lighter socket as a power source for any other accessory is not recommended.

STORAGE

CUP HOLDERS

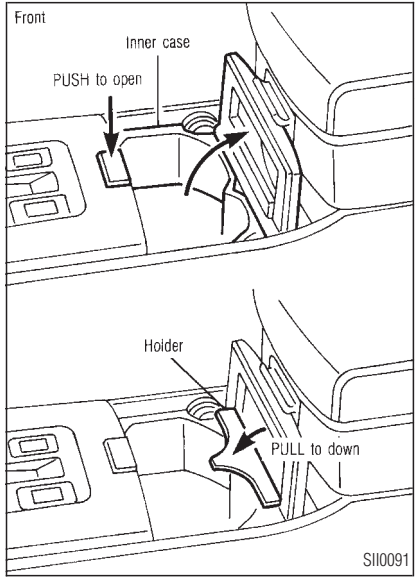

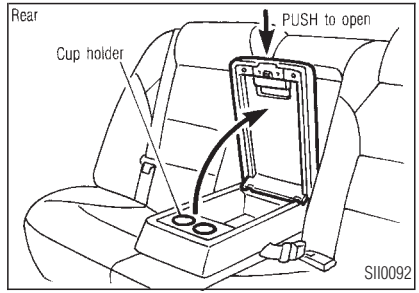

To open, push the cup holder opener switch.

To close, lower the cup holder lid and push down lightly.

Use the cup holder properly and according to the size of the cups.

The inner cases can be removed for cleaning.

WARNING

The cup holder should not be used

while driving in order that full attention may be given to the driving operation.

CAUTION

- ***Avoid abrupt starting and braking when the cup holder is being used to prevent spilling the drink. If the liquid is hot, it can scald you or your passenger.***
- ***Use only soft cups in the cup holder. Hard objects can injure you in an accident.***

GLOVE BOX

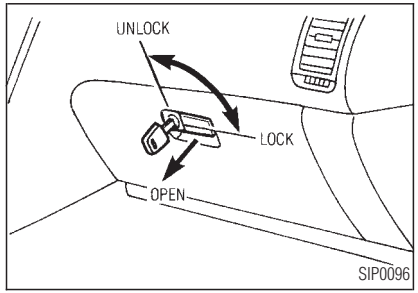

When locking or unlocking the glove box, use the master key and wallet key.

The glove box may be opened by pulling the handle.

WARNING

Keep the glove box lid closed while driving to help prevent injury in an accident or a sudden stop.

CONSOLE BOX

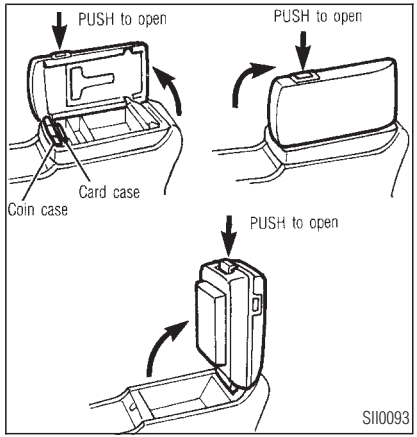

Upper part:

- Push the button on the side of the lid to open the upper part sideways.

- The lid can be opened from the driver and front passenger seats.
- The dividing plates can be moved to the desired positions.
- The front part is designed to be used as a card case and coin case.

To open the lid, the right and left sides it must be closed securely.

Lower part:

While pushing up the button, open the cover.

WARNING

- ***The console box should not be used while driving in order that full attention may be given to the driving operation.***
- ***Keep the center console box lid closed while driving to prevent injury in an accident or a sudden stop.***

WINDOWS

POWER WINDOWS

WARNING

- ***Make sure that all passengers have their hands, etc. inside the vehicle before closing the windows. Use the window lock switch to prevent unexpected use of the power windows.***
- ***Do not leave children unattended inside the vehicle. They could unknowingly activate switches or controls and become trapped in a window. Unattended children could become involved in serious accidents.***

The power windows operate when the ignition key is in the ON position, or for about 45 seconds after the ignition key is turned to the OFF position. If the driver's or passenger's door is opened during this period of about 45 seconds, power to the windows is cancelled.

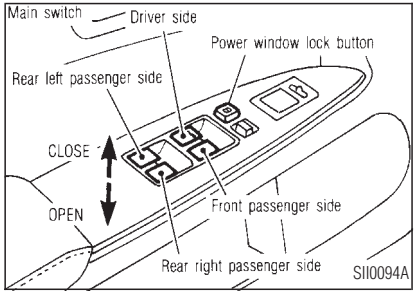

To open or close the window, push down or pull up the switch and hold it. The main switch (driver side switches) will open or close all the windows.

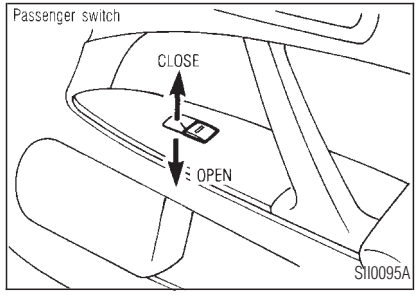

The passenger side switch will open or close only the corresponding window. To open or close the window, hold the switch down or up.

Locking passenger's windows

When the lock button is pushed in, only the driver side window can be opened or closed. Push it in again to cancel.

Automatic operation

To fully open the driver side window, completely press down the AUTO switch and release it; it need not be held. The window will automatically open all the way. To stop the window, just pull up the switch toward the close side.

SUNROOF

WARNING

- ***In an accident you could be thrown from the vehicle through an open sunroof. Always use seat belts and child restraints.***
- ***Do not allow anyone to stand up or extend any portion of their body out of the opening while the vehicle is in motion or while the sunroof is closing.***

CAUTION

- ***Remove water drops, snow, ice or sand from the sunroof before opening.***
- ***Do not place any heavy object on the sunroof or surrounding area.***

AUTOMATIC SUNROOF

The sunroof operates when the ignition key is in the ON position, or for about 45 seconds after the ignition key is turned to the OFF position. If the driver's, or passenger's door is opened during this period of about 45 seconds, power to the sunroof is canceled.

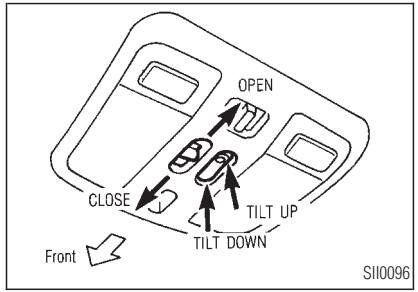

Sliding the sunroof

To open the roof, press and hold the switch to the open side.

To close the roof, press and hold the switch to the closed side.

Automatic operation:

To fully open the sunroof, completely press the switch to the open side; it need not be held. The sunroof will automatically open all the way. To stop the sunroof, just press the switch toward the close side, or press the up or down side of the tilt switch.

Tilting the sunroof

To tilt up, first close the sunroof, then press and hold the up side of the tilt switch. To tilt down the sunroof, press and hold the down side.

Sun shade

Open/close the sun shade by sliding it backward/forward.

The shade will open automatically when the sunroof is opened. However, it must be closed manually.

If the sunroof does not close

Have your INFINITI dealer check and repair the sunroof.

REAR SUN SHADE

CAUTION

- ***To avoid personal injury, keep your hands, fingers and head away from the sun shade arm, arm rail and screen inlet port.***
- ***Do not allow children near the rear sun shade system. They could be injured.***
- ***Do not place objects on or near the rear sun shade. This could cause improper operation or damage it.***
- ***Do not pull or push the rear sun shade. This could cause improper operation or damage it.***

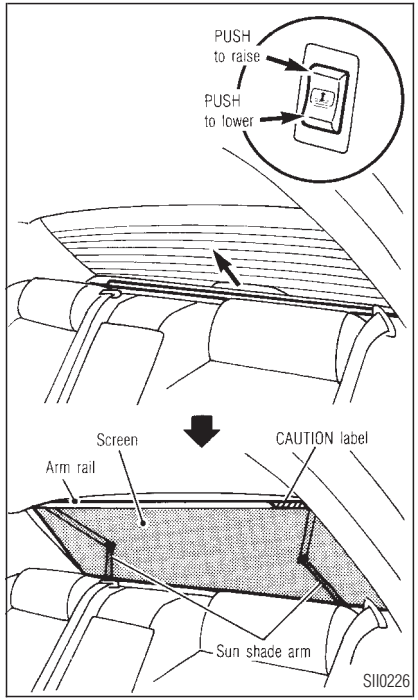

The rear sun shade operates when the ignition key is in the ACC or ON position.

To raise the screen, push the upper side of the switch.

To lower the screen, push the lower side of the switch.

The switch need not be held down.

You cannot use the rear sun shade when you install a child restraint with a top strap in a rear outboard seat. To install a child restraint, first lower the screen. See "Child restraints" in the "1. Seats, restraints and supplemental air bag systems" section for top strap child restraints.

- **Do not place objects (such as newspapers, handkerchiefs, etc.) on the screen inlet port. Doing so may entangle these objects in the screen when it is extending or retracting, causing improper operation or dam-**

age to the screen.

- **Do not place any object on the screen inlet port. Improper operation or damage to the screen may result.**
- **Do not push the sun shade arm with your hands, etc., as this may deform it. Improper operation or damage to the screen may result.**
- **Do not put any object into the screen inlet port as this may result in improper operation or damage the screen.**
- **Do not hang any object on the arm rail as this may result in improper operation or damage the screen.**
- **Do not forcefully pull the screen. Doing so may elongate the screen. Improper operation or damage to the screen may result.**

CLOCK

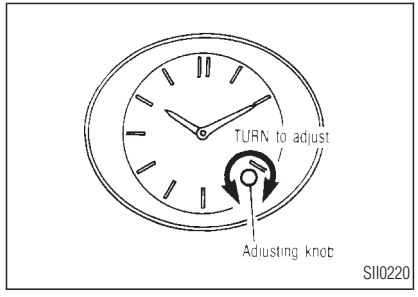

If the power supply is disconnected, the clock will not indicate the correct time. Readjust the time.

ADJUSTING THE TIME

To adjust the time, turn the adjusting knob.

INTERIOR LIGHTS

The interior light switch has a three-position.

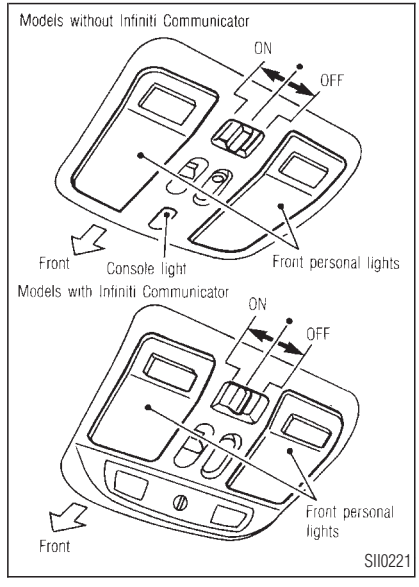

While the switch is in the center • position, the front and rear personal, console and

footwell lights will illuminate under the following conditions:

- driver's door is unlocked.
  - — remain on for a maximum of 30 seconds.
- driver's door is opened.
  - — remain on for a maximum of 30 seconds after driver's door is closed.
- ignition key is removed from key cylinder.
  - — remain on for a maximum of 30 seconds.

The lights will go off when the ignition key is in the ACC position, or the driver's door is closed and locked.

The lights will also go off after 30 minutes while doors are open.

When some doors are opened, the door step light for each open door and some personal lights will come on, and the closed door's personal lights will darken. See "Personal lights" later in this section.

CAUTION

Leaving the light switch in the ON position for extended periods of time will result in a discharged battery.

PERSONAL LIGHTS

FRONT

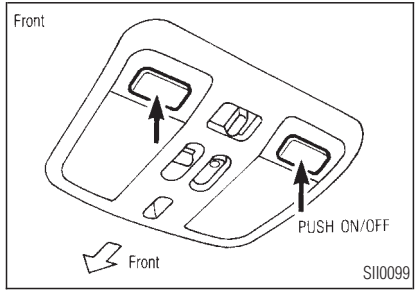

When the switch is pushed in with the interior light switch in the center • or OFF position, the light will turn on. When the switch is pushed again, the light will turn off. See "Interior lights" earlier in this section.

REAR

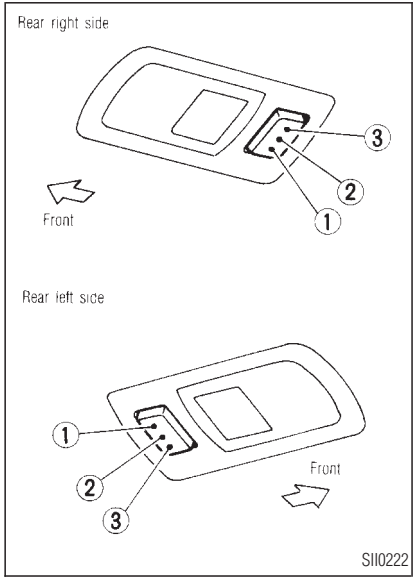

The lights will turn on/off depending on what side of the switch is pressed:

① The light stays on when pressed to this position.

② When the door is opened, both the right and left lights come on. They turn off when the door is closed. If the interior light switch is in OFF position, the personal light will not turn on when the any of the doors are opened. See “Interior lights” earlier in this section.

③ When the switch is pressed, both right and left lights come on.

VANITY MIRROR LIGHTS

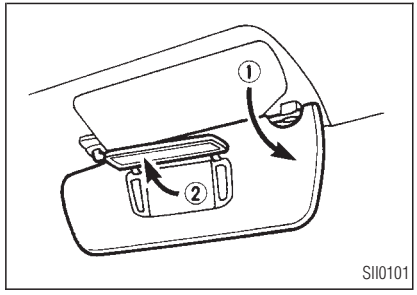

The light on the vanity mirror will turn on when the cover on the vanity mirror is opened.

TRUNK LIGHT

The light illuminates when the trunk lid is opened. When the trunk lid is closed, the light will go off.

INTEGRATED HomeLink® UNIVERSAL TRANSCEIVER

The Integrated HomeLink® Universal Trans-

ceiver provides a convenient way to consolidate the functions of up to three individual hand-held transmitters into one built-in device.

Integrated HomeLink® Universal Transceiver:

- Will operate most Radio Frequency (RF) devices such as garage doors, gates, home and office lighting, entry door locks and security systems.
- Is powered by your vehicle's battery. No separate batteries are required. If the vehicle's battery is discharged or is disconnected, HomeLink® will retain all programming.

Once the Integrated HomeLink® Universal Transceiver is programmed, retain the original transmitter for future programming procedures (i.e., new vehicle purchases). Upon sale of the vehicle, the programmed Integrated HomeLink® Universal Transceiver buttons should be erased for security purposes. For additional information, refer to "Clearing the programmed information" later in this section.

WARNING

- ***Do not use the Integrated HomeLink® Universal Transceiver with any garage door opener that lacks safety stop and reverse features as required by federal safety standards. (These standards became effective for opener models manufactured after April 1, 1982). A garage door opener which cannot detect an object in the path of a closing garage door and then automatically stop and reverse, does not meet current federal safety standards. Using a garage door opener without these features increases the risk of serious injury or death.***
- ***During programming, your garage door or gate may open or close. Make sure that people and objects are clear of the garage door or gate that you are programming.***
- ***Your vehicle's engine should be turned off while programming the Integrated HomeLink® Universal Transceiver.***

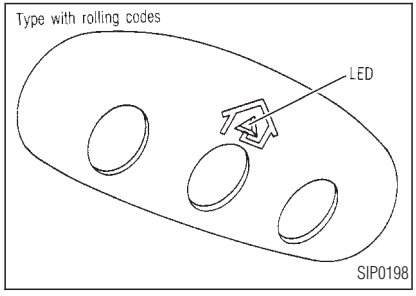

PROGRAMMING HomeLink®

1. With the ignition key in the OFF position, press and hold the two outside buttons, and release when the indicator light begins to flash (approximately 20 seconds). This procedure erases the factory set default codes and does not have to be followed when programming additional hand-held transmitters.
2. Hold the end of the hand-held transmitter (from the device you wish to train) approximately 2 to 5 inches (50 to 127 mm) away from the surface of HomeLink® keeping the indicator light in view.
3. Using both hands, simultaneously push the hand-held transmitter button and the desired HomeLink® button. Do not release the buttons until step 4 has been completed.

   NOTE:

   Some garage door openers may require the procedures noted under "Canadian Programming".
4. The HomeLink® indicator light will flash, first slowly and then rapidly. When the indicator light flashes rapidly, both buttons may be released. The rapid flashing light indicates the Integrated HomeLink® Universal Transceiver has been successfully programmed.

To program the remaining two buttons, follow steps 2 through 4.

If, after repeated attempts, you do not successfully program the Integrated HomeLink® Universal Transceiver to learn the signal of the hand-held transmitter, refer to "Rolling Code Programming" later in this section.

CANADIAN PROGRAMMING

Prior to 1992, D.O.C. regulations required hand-held transmitters to stop transmitting after 2 seconds. To program your hand-held transmitter to HomeLink®, continue to press and hold the HomeLink® button (note steps 2 through 4 under "Programming HomeLink®") while you press and re-press ("cycle") your hand-held transmitter every 2 seconds until the indicator light flashes rapidly (indicating successful programming).

NOTE:

If programming a garage door opener, etc., it is advised to unplug the device during the "cycling" process to prevent possible damage to the garage door

opener components.

OPERATING THE INTEGRATED HomeLink® UNIVERSAL TRANSCEIVER

The Integrated HomeLink® Universal Transceiver (once programmed) may now be used to activate the garage door, etc. To operate, simply press the appropriate programmed Integrated HomeLink® Universal Transceiver button. The red indicator light will illuminate while the signal is being transmitted.

PROGRAMMING PROBLEM-DIAGNOSIS

If the HomeLink® does not quickly learn the hand-held transmitter information:

- replace the hand-held transmitter batteries with new batteries.
- position the hand-held transmitter with its battery area facing away from the HomeLink® surface.
- press and hold both the HomeLink® and hand-held transmitter buttons without interruption.
- position the hand-held transmitter 2 to 5 inches (50 to 127 mm) away from the HomeLink® surface. Hold the transmitter in that position for up to 15 seconds. If HomeLink® is not programmed within that time, try holding the transmitter in another position - keeping the indicator light in view at all times.

If you continue to have programming difficulties, please contact the INFINITI Consumer Affairs Department. The phone numbers are located in the Foreword of this Owner's Manual.

CLEARING THE PROGRAMMED INFORMATION

Individual buttons cannot be cleared, however to clear all programming, press and hold the two outside buttons and release when the indicator light begins to flash (approximately 20 seconds).

ROLLING CODE PROGRAMMING

Rolling code garage door openers (or other rolling code devices) which are "code protected" and manufactured after 1996, may be determined by the following.

A. Reference the garage door opener Owner's Manual for verification.

B. The hand-held transmitter appears to program the Integrated HomeLink® Universal Transceiver but does not activate the garage door.

C. Press and hold the trained HomeLink® button. If the garage door opener has the rolling code feature, the HomeLink® indicator light will flash rapidly, then remains on after 2 seconds.

To program the Integrated HomeLink® Uni-

versal Transceiver to a garage door opener with the rolling code feature, follow these instructions after completing the "Programming HomeLink®" procedures earlier in this section. The aid of a second person may make the following procedures quicker and easier.

1. Locate the training button on the garage door opener motor unit. Exact location and color of the button may vary by garage door opener brand. If there is difficulty locating the training button, reference the garage door opener Owner's Manual.
2. Press the training button on the garage door opener motor unit (which may activate a training light).

   NOTE:

   Following step 2, there are 30 seconds in which to initiate step 3.

3. Firmly press and release the programmed HomeLink® button. Press and release the HomeLink® button a second time to complete the training process. (Some garage door openers may require you to do this procedure a third time to complete the training.)

The garage door opener should now recognize the Integrated HomeLink® Universal Transceiver and activate when the HomeLink® button is pressed. The remaining two buttons may now be programmed (if not yet programmed, follow steps 2 through 4 in the "Programming HomeLink®" procedures earlier in this section).

REPROGRAMMING A SINGLE HomeLink® BUTTON

To reprogram an Integrated HomeLink® Universal Transceiver button, complete the following.

1. Press and hold the desired HomeLink® button. **Do not** release the button until step 4 has been completed.
2. When the indicator light begins to flash slowly (after 20 seconds), position the hand-held transmitter 2 to 5 inches (50 to 127 mm) away from the HomeLink® surface.
3. Press and hold the hand-held transmitter button.
4. The HomeLink® indicator light will flash, first slowly and then rapidly. When the indicator light begins to flash rapidly, release both buttons.

The Integrated HomeLink® Universal Transceiver button has now been reprogrammed. The new device can be activated by pushing the HomeLink® button that was just programmed. This procedure will not affect any other programmed HomeLink® buttons.

IF YOUR VEHICLE IS STOLEN

If your vehicle is stolen, you should change the codes of any non-rolling code device that has been programmed into HomeLink®. Consult the Owner's Manual of each device or call

the manufacturer or dealer of those devices for additional information.

When your vehicle is recovered, you will need to reprogram the Integrated HomeLink® Universal Transceiver with your new transmitter information.

FCC Notice:

This device complies with FCC rules part 15. Operation is subject to the following two conditions: (1) This device may not cause harmful interference and (2) This device must accept any interference that may be received, including interference that may cause undesired operation.

The transmitter has been tested and complies with FCC and DOC/MDC rules. Changes or modifications not expressly approved by the party responsible for compliance could void the user's authority to operate the device.

DOC: ISTC 1763K1313

FCC I.D.: CB2V67690

INFINITI COMMUNICATOR (if so equipped)

CAUTION

It is important that you fully understand the limitations of the Infiniti Communicator system prior to use.

There are limitations to the Infiniti Communicator system. Please make sure you understand the limitations before using Infiniti Communicator. See "System limitations" later in this section.

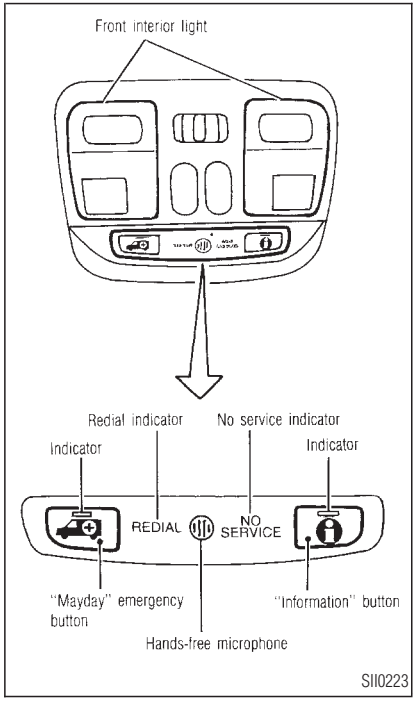

INFINITI COMMUNICATOR PURPOSE

The purpose of Infiniti Communicator is to provide you with increased security by giving you a convenient way of contacting the most appropriate emergency assistance provider during an emergency. You will have a choice of functions depending on the service contract you choose.

INFINITI COMMUNICATOR OUTLINE

This system uses the Global Positioning System (GPS), cellular phone technology and the Communicator Response Center to provide the following functions:

- One touch “Mayday” emergency dialing
- One touch “Information” dialing
- Automatic supplemental air bag inflation notification
- Remote door unlock
- Stolen vehicle tracking
- Alarm notification

SAFE OPERATING RECOMMENDATIONS

WARNING

- ***The Infiniti Communicator system should not be used while driving in order that full attention may be given to driving.***
- ***The cellular phone handset should not be used while driving in order that full attention may be given to driving.***
- ***If you must make a call while your vehicle is in motion, the hands-free cellular phone operational mode is highly recommended. Exercise extreme caution at all times in order that full attention may be given to driving.***
- ***If a conversation in a moving vehicle requires you to take notes, pull off the road to a safe location and stop your vehicle before doing so.***

It is important that you read this Owner’s Manual thoroughly to ensure the safe operation of your Infiniti Communicator system.

- The safest calls are those made when the vehicle is stopped.
- Hands-free cellular phone operation is highly recommended and is easily maintained by keeping the cellular telephone

handset in the cradle.

QUICK SUMMARY

- "Mayday" emergency and "Information" dialing can take place when the ignition key is in the ON position or about 3 minutes after it is turned OFF.
- There will be a delay of at least 25 seconds from the time the "Mayday" emergency or "Information" button is pressed until a Communicator Response Center operator answers the call. During the delay, Infiniti Communicator is making the connection and transmitting vehicle data to the Communicator Response Center. If the cellular lines or landlines are busy, the delay may be longer.
- Voice communication with the Communicator Response Center is all done through a hands-free microphone. Audio is heard through the right front door speaker. To adjust the speaker volume, push the volume up/down switch in the steering switch for the cellular phone.
- All indicators REDIAL, NO SERVICE, show the condition of the system (transmitting, redialing, etc.). For details see "Infiniti Communicator indicator description" later in this section.
- All indicators REDIAL, NO SERVICE, illuminate for up to 30 seconds when the ignition switch is turned from OFF to ON and the Infiniti Communicator system performs a self check. However, no indicators will illuminate when the ignition switch is turned from ON to OFF to ON in less than 3 minutes because the system remains available.
- If the "Mayday" emergency and "Information" button indicators do not turn off after the ignition switch is turned ON, or if both button indicators illuminate any time while the ignition switch is ON except immediately after the ignition switch is turned ON, the system is not working correctly. You will need to take your car to your INFINITI dealer. The Infiniti Communicator system may still operate in some cases.
- When the Infiniti Communicator contacts the Communicator Response Center, vehicle data, that includes the position of your car, is sent to the Response Center.
- You can choose an optional handset so the Infiniti Communicator system can be used as a normal cellular phone.

FUNCTIONS

One touch "Mayday" emergency dialing

If an emergency occurs, press the "Mayday" emergency button. The indicator in the button blinks and then stays on, indicating the Communicator Response Center is being contacted. When Infiniti Communicator con-

nects with the Communicator Response Center, vehicle information, including the type of call (Mayday) and vehicle position, is transmitted to the Communicator Response Center. Voice communication using the Infiniti Communicator system is not possible when data is being transmitted. After the data is transmitted, the Communicator Response Center operator will come on-line to speak with you. The Response Center operator will contact emergency crews and send them to your location, if you request them. If you do not answer the operator, or if the operator hears something that sounds like an emergency, emergency crews will be informed. If no emergency exists, the Response Center operator will ask you to give the prearranged password. A false password will be interpreted as a duress situation. This will prompt the operator to dispatch emergency assistance. The operator will also appear to end the call, but will covertly monitor your vehicle until assistance arrives.

One touch "Information" dialing

If the vehicle becomes disabled because of engine or other trouble, press the "Information" button for roadside service. The indicator in the button blinks and then stays on, indicating the Communicator Response Center is being contacted. When Infiniti Communicator connects with the Communicator Response Center, vehicle information, including the type of call (Information) and vehicle position, is transmitted to the Response Center. Voice communication using the system is not possible when data is being transmitted. After the data is transmitted, the Communicator Response Center operator will come on-line to speak with you. This button may also be used to obtain more information about your Infiniti Communicator system. You may also use the "Information" button to request services that may be added in the future.

Automatic supplemental air bag inflation notification

When the supplemental air bag inflates, it is assumed that a collision has taken place. Infiniti Communicator contacts the Communicator Response Center, even if the "Mayday" emergency dialing button is not pressed. The Communicator Response Center notifies the appropriate local agencies. The Communicator Response Center will attempt to contact you. If contact is established, the Communicator Response Center will provide the responding emergency crews with information about your condition. The Communicator Response Center will stay in contact until the emergency crews arrive.

Remote door unlock

If you lock the keys in your car, you can call the Communicator Response Center by telephone. Refer to your Infiniti Communicator Card for the Communicator Response Center

telephone number. The Infiniti Consumer Affairs department can also provide the telephone number for the Communicator Response Center. Keep this number where it will be available when your vehicle is locked. You are required to provide a prearranged password to confirm your identity. Upon verification that you are the owner, the Communicator Response Center will instruct you how to open the door.

Stolen vehicle tracking

In some cases of theft, your car can be tracked by the Communicator Response Center. This function allows the verified owner of the car to contact the Communicator Response Center to attempt to locate the stolen car. If you have not done so, the Communicator Response Center operator will help you file a stolen vehicle report with the appropriate police department. A stolen vehicle report is often required before the authorities will dispatch police officers to the vehicle location. Call the Communicator Response Center by telephone. Refer to your Infiniti Communicator Card for the Communicator Response Center telephone number. The Infiniti Consumer Affairs department can also provide the telephone number for the Communicator Response Center. Keep this number where it will be available when your vehicle is stolen. In order to find the location of your stolen car, the ignition switch must be in the ON position. If the Communicator Response Center successfully locates your vehicle, the operator has the ability to covertly hear what is happening inside the vehicle. The Communicator Response Center operator will report any important information to the authorities. If you have any concerns about this feature, you should contact the Communicator Response Center.

Alarm notification

If the vehicle's theft warning system is activated and stays on for more than 7 seconds, the Infiniti Communicator system automatically contacts the Communicator Response Center. Alarm notification functions regardless of the ignition switch position. The Communicator Response Center will assess the situation and will attempt to call you or your emergency contact, if possible. If you are in the vehicle, the Communicator Response Center operator will request your password to verify your identity. It is possible for the Communicator Response Center to covertly hear what is going on inside the car when this function is ON. If you have any concerns about this feature, you should contact the Communicator Response Center.

FUNCTION AND DESCRIPTION

Automatic redial/auto reset to ready

When Infiniti Communicator tries to contact the Communicator Response Center, but the cellular network is busy, the system attempts to dial for up to two hours. This time varies

greatly depending on the cellular network and cellular signal strength. The system resets to ready when the system completes the dialing attempts. You can press the button again if you still need to contact the Communicator Response Center. Infiniti Communicator automatically redials if communication between you and the Communicator Response Center is lost for some reason. The only way for a transmission to be officially terminated is for the Communicator Response Center to send an end transmission signal, which turns off the indicator in the or button. All information sent to the Communicator Response Center is recorded.

If cellular signal strength is low, it is possible that Infiniti Communicator will not be able to terminate the transmission. You may have to repress the button if you still need to contact the Communicator Response Center.

If there is a natural disaster, such as an earthquake, all of the Communicator Response Center phone lines may become busy. The Infiniti Communicator system in your vehicle will not attempt to recontact the Communicator Response Center.

Priority Communicator Response Center dialing

If you are using the optional cellular phone and the supplemental air bag inflates or the "Mayday" or the "Information" button is pressed, your phone transmission will be cut so the Infiniti Communicator system can contact the Communicator Response Center.

Roaming

If you have chosen a local cellular provider for your optional handset and the company that you have contracted with for your cellular phone does not have a roaming agreement for the area where your vehicle is within the 48 contiguous states, it may not be possible to use the lines of a different cellular phone company. Therefore, it is possible that Infiniti Communicator will not be able to contact the Communicator Response Center.

Data transmission

During transmission to the Communicator Response Center, data will be collected on the type of call, vehicle location, direction and speed at the time of activation.

Global Positioning System functions

The Global Positioning System (GPS) is used to obtain the vehicle location. GPS satellites transmit radio waves and orbit around the earth at an altitude of approximately 13,000 miles (21,000 km). The GPS receiver calculates the three-dimensional position (latitude, longitude, and altitude from sea level) of the vehicle by using the time differences of radio waves arriving from several GPS satellites.

You cannot receive any Global Positioning System (GPS) data in areas where radio

reception conditions are poor. In such cases, the latest GPS data received will be transmitted to the Communicator Response Center. Then, the Communicator Response Center will determine the reliability of the GPS data. If the quality of the data is too poor or if the data cannot be located, the Communicator Response Center operator will ask you for your vehicle's position. Factors such as topography, electronic interference or weather conditions may affect GPS data and transmission.

- Since radio waves from the GPS satellites may be obstructed when driving through tunnels, near tall buildings near densely planted trees, underneath double-deck expressways, or in-building parking lots, the signals may not be received. That is, the environment may prevent detection of vehicle position or cause errors.
- The US Department of Defense controls the GPS satellite signals. Therefore, signal transmission accuracy may drop or be suspended.

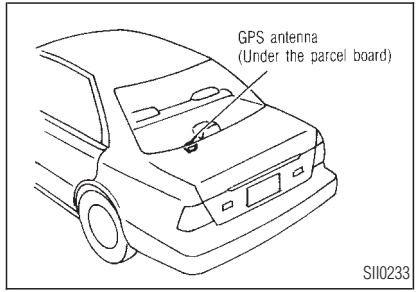

- Avoid placing objects over the GPS antenna installed inside the vehicle and do not place portable telephones and hand held wireless units near the Infiniti Communicator antennas. Also, keep the front and/or rear windshield free of snow and ice. Since the strength of radio waves from the GPS satellites is relatively small, signal quality may drop, resulting in poor or no signal reception.

Contract with Communicator Response Center

Since your phone number and cellular phone programming are not known before your car is purchased, your telephone must be properly programmed to be able to contact the Communicator Response Center from your car. You may want to ask your INFINITI dealer to help you setup the Infiniti Communicator system.

When you move or change your cellular phone number, please contact the Communicator Response Center at 888-870-9898 to have the contents of the service contract changed. This is necessary for Infiniti Communicator to function properly.

When selling your car, ending your service contract with Communicator Response Center, or transferring service, please contact the Communicator Response Center at 888-870-9898.

Activation

You must complete the activation process as

soon as possible after service contract is completed. Simply press either the "Mayday" emergency or "Information" button to begin the activation process. A Communicator Response Center operator will verify the information from the application that you filled out at your INFINITI dealer. The operator also verifies that the GPS system functions correctly and provides a brief orientation to the Infiniti Communicator system. Finally, the operator will ask if you would like to establish a password in the system. The Infiniti Communicator system remains in a demonstration mode until the setup procedures are completed. If you perform any operation, the Communicator Response Center will recognize this operation as a demonstration and will not provide service. A service contract needs to be completed between you and the Communicator Response Center and an active account must be maintained for you to receive service from the Response Center.

Miscellaneous

- Turning the ignition OFF during a call to the Communicator Response Center will not interrupt your conversation unless there is a problem with the battery. To protect the battery, you may want to use the system while the engine is running (except when running the engine may be dangerous, such as after an accident or in an enclosed space like a garage).
- If you start the engine during a call, your conversation may be interrupted. When this happens the system may try to resume transmission once the engine has been started.
- Audio, such as the radio, cassette or compact disc, is unavailable (Auto mute) as long as Infiniti Communicator is connected to the Communicator Response Center, unless the vehicle is being monitored in case of theft or in duress situations.
- When stolen vehicle tracking and alarm notification are used with the optional handset connected, some indications are, at times, sent to the handset.
- When the audio mode is switched to the data mode on completion of the call a beeping or hissing noise may be heard. The noise occurs because the call is being made through the modem. What you hear is the modem switching between voice and data modes. This is normal and does not indicate a malfunction.
- If battery power is lost, for any reason, during a call to the Communicator Response Center, Infiniti Communicator will automatically attempt to redial the Response Center when battery power is restored.

INFINITI COMMUNICATOR INDICATOR DESCRIPTION

All indicators are ON

- All indicators are turned ON for up to 30 seconds when the ignition key is turned from OFF to ON. This is normal operation.
- If there is a fault in the system, the "Mayday" emergency and "Information" button indicators remain ON and the system may not work correctly.
- If only the "Mayday" emergency button indicator is ON when the ignition is turned from OFF to ON and the button was not pressed, the Infiniti Communicator system may not be working correctly.

"Mayday" emergency button indicator blinking

The "Mayday" emergency button was pressed. Infiniti Communicator is trying to acquire an available cellular channel.

"Mayday" emergency button indicator ON

The "Mayday" emergency button was pressed. System is connected to a cell and is communicating information to the Communicator Response Center.

"Information" button indicator blinking

The "Information" button was pressed. Infiniti Communicator is trying to acquire an available cellular channel.

"Information" button indicator ON

The "Information" button was pressed. The system is connected to a cell and is communicating information to the Communicator Response Center.

Redial indicator ON/blinking

The initial connection was not successful. Infiniti Communicator is attempting to redial to contact the Communicator Response Center. The redial indicator may blink before the button indicator blink.

No service indicator ON

Cellular phone is outside of cellular phone transmission range. Infiniti Communicator will not be able to contact the Communicator Response Center until the phone is inside of cellular phone transmission range. If you choose the optional handset, the Infiniti Communicator system's No service indicator and the handset display are not synchronized. The handset and Infiniti Communicator system No service indicator do not turn on or off at the same time.

REDIAL NO SERVICE *Redial and no service indicators ON*

Infiniti Communicator was activated inside of cellular phone transmission range, but the vehicle was driven out of cellular phone transmission range. Infiniti Communicator lost the signal so it tries to redial. Infiniti Communicator will attempt to reestablish contact for 30 minutes.

REDIAL NO SERVICE *Redial and no service indicators alternating ON and OFF*

Infiniti Communicator is contacting the Communicator Response Center when Infiniti Communicator is in demonstration mode. **The Communicator Response Center will not provide service until the setup procedures are completed.**

OPERATION OF OPTIONAL HANDSET

You can choose an optional handset so the Infiniti Communicator system can be used as a normal cellular phone. In order to effectively provide all Infiniti Communicator system features, only the optional handset available from your INFINITI dealer should be installed. Docking stations and other handsets may interfere with the Infiniti Communicator system functions or render the system inoperable. Refer to your handset operational manual for information on how to use your handset.

Infiniti Communicator gives preference to the Communicator Response Center connection. If Infiniti Communicator is activated when you are using the optional handset, your phone transmission will be cut and Infiniti Communicator will dial the Communicator Response Center. The cellular handset will be disabled, and communication with the Communicator Response Center operator will be carried out through the hands-free microphone. After communication with the Communicator Response Center is finished, the handset last number memory will be erased.

PAYMENT FOR INFINITI COMMUNICATOR USE

It is the owner's responsibility to maintain an active account with the cellular provider and Communicator Response Center. If either account is inactive, Infiniti Communicator will not operate.

SYSTEM LIMITATIONS

The Infiniti Communicator system relies on the cellular network. The Infiniti Communicator system is subject to the same limitations that affect cellular phone operation.

Since Infiniti Communicator is powered by the vehicle's battery, if the battery is removed, damaged or discharged, the system will not work.

Service area

Service is provided in the 48 contiguous states. Service is not available in Alaska, Hawaii, Canada, or Mexico. The Communicator Response Center will not be able to locate your car outside of the continental United States.

Inoperative if cellular system is busy

The number of available cellular lines is limited in a particular area and varies according to call volume. Once the call volume reaches the maximum, any additional calls cannot be processed. When Infiniti Communicator encounters such a situation, the system attempts to dial for up to two hours. This time varies greatly depending on the cellular network and cellular signal strength. The system resets to ready when the system completes the dialing attempts. You can press the button again if you still need to contact the Communicator Response Center. After several failed attempts the system will quit dialing and return to normal mode.

Cellular PIN features

Some local cellular providers offer custom phone numbers that are assigned a Personal Identification Number (PIN). The cellular phone user is required to enter the PIN any time a phone call is made. The Infiniti Communicator system is not compatible with the PIN feature. A PIN requirement on your cellular phone will cause the Infiniti Communicator system to be inoperative. When completing your service contract with your cellular provider, ask your carrier to assign you a number that does not require a PIN.

Special cellular features

Some cellular providers offer special features such as call waiting, voice mail, call forwarding, etc. These features can interfere with Infiniti Communicator system operation.

Cellular airwave interference

At times you may hear someone other than the Communicator Response Center operator talking. This is caused by cellular airwave interference and is not caused by an Infiniti Communicator system malfunction. Generally, if you are driving, the interference will go away. If cellular airwave interference occurs when the Infiniti Communicator system is transmitting data to the Communicator Response Center, the Infiniti Communicator system automatically switches to voice communications. There may be cases where cellular airwave interference may prevent the Infiniti Communicator System from completing the connection to the Communicator Response Center.

Security

The Infiniti Communicator system uses the cellular phone network. Conversations and

data transmissions are not secure. Third parties may be able to listen to your conversation.

Aftermarket accessories

When installing a CB radio or car phone in your INFINITI, be sure to observe the following cautions. Otherwise, the new equipment may adversely affect the Multiport Fuel Injection system, Infiniti Communicator system, or other electronic parts.

Potentially inoperative if the vehicle is in an accident

If you are involved in an accident, Infiniti Communicator may also be damaged. Since Infiniti Communicator is powered from the vehicle, damaged Infiniti Communicator related components such as the battery will disable the system.

Inoperative if cellular phone is inactive or inoperative

Infiniti Communicator will be inoperative if you do not have an active cellular account with a cellular provider. Since Infiniti Communicator relies on the cellular network, the system will not work if the cellular service or your cellular phone is inactive.

When the Infiniti Communicator system is outside of cellular service, the NO SERVICE indicator will illuminate. If you try to activate Infiniti Communicator, the request will be canceled. Cellular phone transmission may become temporarily disabled, or interrupted by environmental factors such as tunnels, bridges, or tall buildings. When Infiniti Communicator encounters such a situation, the system attempts to dial for up to two hours. This time varies greatly depending on the cellular network and cellular signal strength. The system resets to ready when the system completes the dialing attempts. You can press the button again if you still need to contact the Communicator Response Center. After several failed attempts the system will quit dialing and return to normal mode.

Phone number changes

The Infiniti Communicator system is only capable of accepting up to 15 phone number changes. You may need to purchase Infiniti Communicator system components if the phone number changes more than 15 times.

CAUTION

- ***Keep antennas as far away as possible from electronic control units (including radio and Infiniti Communicator system components).***
- ***Keep antenna wire more than 8 in (20 cm) away from the Multiport***

Fuel Injection and Infiniti Communicator harnesses. Do not route antenna wires next to any other harness.

FALSE ACTIVATIONS AND PASSWORD SELECTIONS

When you complete the contract with the Communicator Response Center, you will be given the option of establishing a user password. You are strongly encouraged to establish a password. The password is used to verify your identity in the following situations:

- You will be asked to provide a password if your make a request to unlock the doors by remote operation.
- When the "Mayday" emergency button has been pressed in any nonemergency situation. The Communicator Response Center operator will come online and ask for your password to verify your identity. If an incorrect password is provided, the Communicator Response Center operator will assume you are under duress. The operator will covertly monitor what is happening inside the vehicle and contact the police. The operator will provide the police with the latest/current vehicle location. You do not need to have a password if you need emergency services. If you choose not to establish a password, simply indicate to the operator that the assistance request was initiated in error and the call will be terminated.
- If the vehicle's theft warning system was activated for more than seven seconds, the Infiniti Communicator system contacts the Communicator Response Center. The Communicator Response Center operator will come online and request the password from the occupant. If no password or an incorrect password is provided, the operator will contact the police and provide them with the latest/current vehicle location.

Choose a password that will not be easy for someone else to figure out.

All other aspects of your service will be identical regardless of your password decision.

STEERING SWITCH FOR CELLULAR PHONE (Models with Infiniti Communicator)

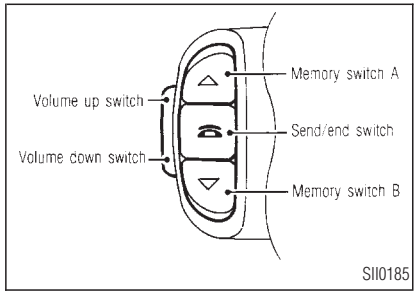

The steering switch except the volume up/down switch will operate only if the handset is in the cradle. This system allows steering switching when telephone calls are received or terminated. A maximum of six telephone numbers which are stored in the memory of the cellular phone can be dialed using the steering switch operation. For the procedure to memorize telephone numbers, refer to your cellular phone operation manual.

SWITCH OPERATIONS

Send/end

- When a call is received, press the send/end switch to permit conversation.
- At the completion of the conversation, press the send/end switch to terminate the call.
- To redial the number of the most recent call, press the send/end switch when the telephone is turned off.

Memory select

To select memory 1 to 6, press △ memory switch A or ▽ B. Every press on the switch changes memory as follows:

△ : memory 1 → 2 → 3 → OFF

▽ : memory 4 → 5 → 6 → OFF

After selecting memory, press send/end switch to make a call.

You can program phone numbers into memory only with the optional handset. You cannot program the memory without the handset.

Volume up/down

To adjust the right front door speaker volume, push the volume up/down switch.

Even if you do not choose the optional handset, it is possible to receive phone calls. You can also adjust the volume during the conversation. To receive a phone call, press the send/end switch. The audio system automatically turns off (auto mute) during the call. Press the send/end switch to end the call. The audio system will automatically turn on in about four seconds.

3 PRE-DRIVING CHECKS AND ADJUSTMENTS

Keys 3-2
Doors 3-3
Locking with key 3-3
Locking with inside lock knob 3-4
Locking with power door lock switch 3-4
Child safety rear door lock 3-4
Multi-remote control system 3-5
How to use multi-remote control system ... 3-6
Battery replacement 3-7
Hood 3-9
Trunk lid 3-9
Opener operation 3-9
Key operation 3-10
Auto closure 3-10
Fuel filler lid 3-11
Opener operation 3-11
Fuel filler cap 3-11
Steering wheel 3-13
Tilt operation 3-13
Telescopic operation 3-14
Sun visors 3-14
Using the sun visors 3-14
Mirrors 3-15
Automatic anti-dazzle inside mirror 3-15
Outside mirrors 3-15
Automatic drive positioner 3-16
Automatic drive positioner operation 3-16

KEYS

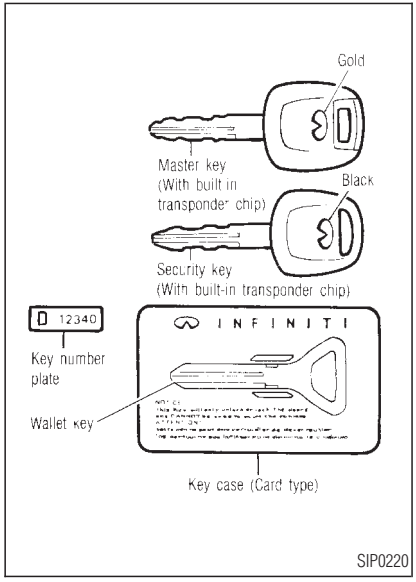

You can only drive your vehicle using the master or security keys which are registered to the Infiniti Vehicle Immobiliser System components in your vehicle. These keys have a transponder chip in the key head. (The wallet key cannot be used to drive your vehicle.)

The master key and wallet key can be used for all locks.

When the key case with the wallet key is placed into your wallet, be careful not to apply excessive force to the wallet as it or other cards could be damaged.

The security key cannot be used for the trunk lid or glove box locks.

To protect belongings when you leave a key with someone, give them the security key only.

Never leave these keys in the vehicle.

Record the key number on the key number plate supplied with your keys and keep it in a safe place (such as your wallet), not in the vehicle. INFINITI does not record any key number so it is very important to keep track of your key number plate.

A key number is only necessary when you have lost all keys and do not have one to duplicate from. If you still have a key, this key can be duplicated by your INFINITI dealer.

Infiniti Vehicle Immobiliser System KEY - Master and Security keys:

The key number is necessary when you need extra Infiniti Vehicle Immobiliser System keys. As many as 5 Infiniti Vehicle Immobiliser System keys can be used with one vehicle. New keys must be registered to the Infiniti Vehicle Immobiliser System components in your vehicle by your INFINITI dealer. At this time, you should bring all Infiniti Vehicle Immobiliser System keys that you have to your INFINITI dealer for registration. This is because the registration process will erase all memory of the Infiniti Vehicle Immobiliser System components.

DOORS

WARNING

- ***Always have the doors locked while driving. Along with the use of seat belts, this provides greater safety in the event of an accident by helping to prevent persons from being thrown from the vehicle. This also helps keep children and others from unintentionally opening the doors, and will help keep out intruders.***
- ***Before opening any door, always look for and avoid oncoming traffic.***
- ***Do not leave children unattended inside the vehicle. They could unknowingly activate switches or controls. Unattended children could become involved in serious accidents.***

LOCKING WITH KEY

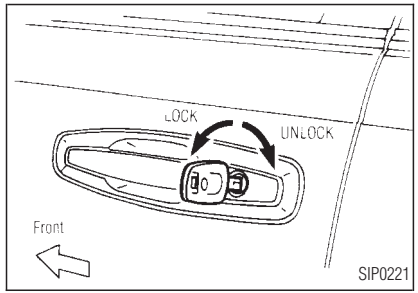

Manual

To lock the door, turn the key toward the front of the vehicle.

To unlock, turn it toward the rear.

Power

The power door lock system allows you to lock or unlock all doors simultaneously.

- Turning the front door key to the front of the vehicle will lock all doors.
- Turning the front door key one time to the rear of the vehicle will unlock the corresponding door. From that position, returning the key to neutral (where the key can only be removed and inserted.) and turning it to the rear again within 3 seconds will unlock all doors.

LOCKING WITH INSIDE LOCK KNOB

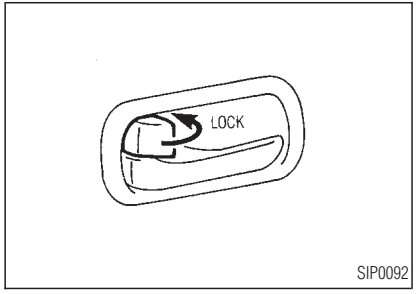

Manual

To lock the doors from the outside without a key, move the inside lock knob to the lock position, then close the door.

When locking the door this way, be certain not to leave the key inside the vehicle.

The inside lock knob of the front door cannot be set to the lock position with front door opened and with the key in the ignition. If this is attempted, all doors will unlock.

Power

The power door lock system allows you to lock all doors simultaneously.

Pushing the front door inside lock knob to the lock position will lock all doors.

LOCKING WITH POWER DOOR LOCK SWITCH

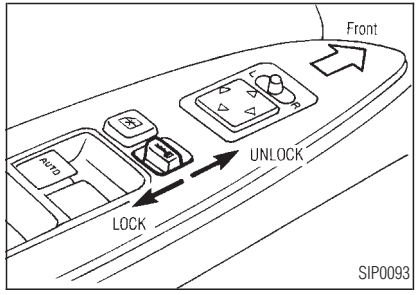

Operating the lock-unlock switch will lock or unlock all doors.

CHILD SAFETY REAR DOOR LOCK

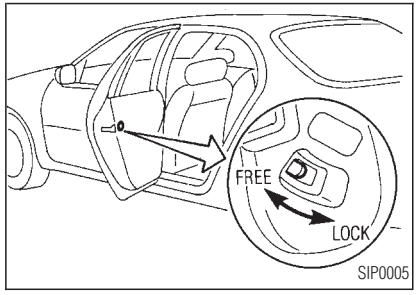

Child safety locking helps prevent doors from being opened accidentally, especially when small children are in the vehicle.

When the lever is in the lock position, the rear door can be opened only from the outside.

MULTI-REMOTE CONTROL SYSTEM

It is possible to lock/unlock all doors, to release the trunk lid and to activate the panic alarm by using the remote controller from outside the vehicle.

Before locking the doors, make sure the key is not left in the vehicle.

The remote controller can operate at a distance of approximately 33 ft (10 m) from the vehicle. (The effective distance depends upon the conditions around the vehicle.)

As many as four remote controllers can be used with one vehicle. For information concerning the purchase and use of additional remote controllers, contact your INFINITI dealer.

CAUTION

Listed below are conditions or occurrences which will damage the remote controller.

- ***Do not allow the remote controller to become wet.***
- ***Do not drop the remote controller.***
- ***Do not strike the remote controller sharply against another object.***
- ***Do not place the remote controller for an extended period in an area where temperatures exceed 140°F (60°C).***

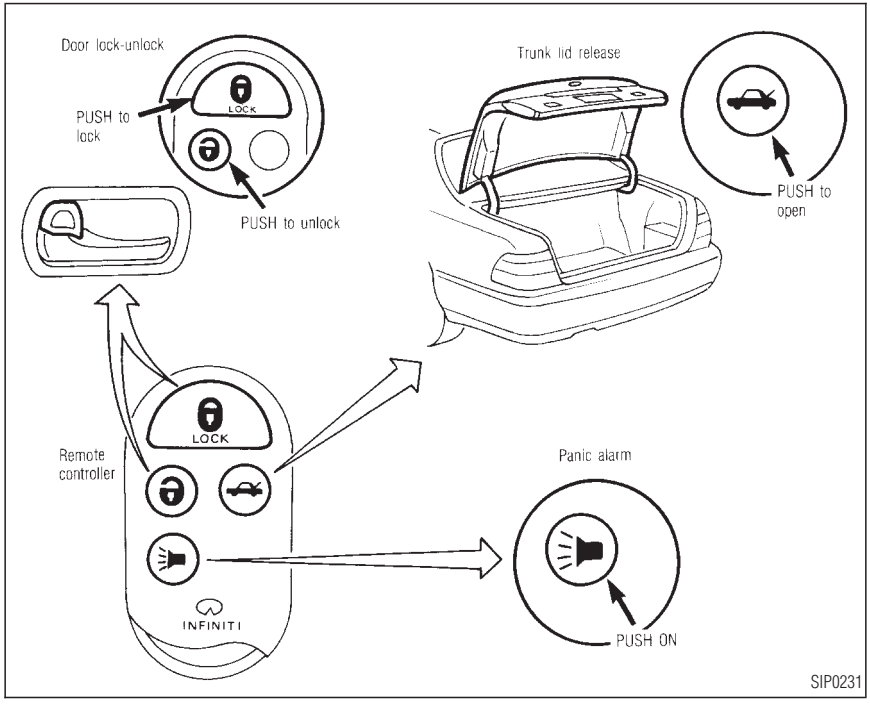

HOW TO USE MULTI-REMOTE CONTROL SYSTEM

Locking doors

1. Remove the ignition key.
2. Close all doors.
3. Push the button on the multi-remote controller.
4. All of the doors locks.
5. The hazard indicators flash twice.

When the button is pushed with all doors locked, the hazard indicators flash twice as a reminder that the doors are already locked.

Unlocking doors

1. Push the button on the multi-remote controller. Only the driver side door unlocks.
2. Push the button on the multi-remote

controller again within 5 seconds. The passenger doors unlock.

3. The interior light will stay on for 30 seconds when the interior light switch is in the center • position.

The interior light can be turned off without waiting for 30 seconds by inserting the key into the ignition then turning to the ACC position or by locking the front door.

Releasing the trunk lid

1. Push the button on the multi-remote controller for longer than 0.5 seconds with the ignition key removed from the key cylinder.
2. The trunk lid opens.

The trunk lid will not open with the trunk lid release cancel switch turned to OFF. See "Trunk lid" later in this section for cancel switch.

Using the panic alarm

If you are near your vehicle and feel threatened, you may activate the alarm to call attention as follows:

1. Push the button on the multi-remote controller for longer than 1.5 seconds.
2. The theft warning alarm and headlight will stay on for 30 seconds.
3. The panic alarm stops when:
   - It has run for 30 seconds, or
   - The , the or the button is pressed, or
   - The button is pushed for longer than 1.5 seconds on the multi-remote controller.

BATTERY REPLACEMENT

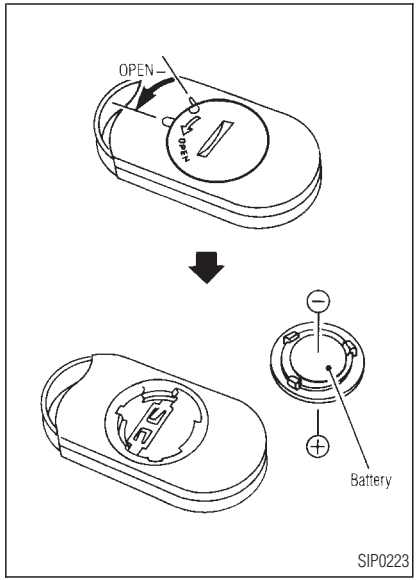

Replace the battery as follows:

1. Open the lid using a suitable tool.
2. Replace the battery with a new one. Recommended battery: CR2025 or equivalent
3. Close the lid securely.
4. Press the key button two or three times to check its operation.

If the battery is removed for any reason other than replacement, perform step 4 above.

- **An improperly disposed battery can hurt the environment. Always confirm local regulations for battery disposal.**
- **The remote controller is water-proof; however, if it does get wet, immediately wipe completely dry.**
- **The operational range of the remote controller extends to approximately 33 ft (10 m) from the vehicle. This range may vary with conditions.**

FCC Notice:

Changes or modifications not expressly approved by the manufacturer compliance could void the user's authority to operate the equipment.
This device complies with Part 15 of the FCC Rules and RSS-210 of Industry Canada. Operation is subject to the following two conditions: (1) This device may not cause harmful interference, and (2) this device must accept any interference received, including interference that may cause undesired operation of the device.

HOOD

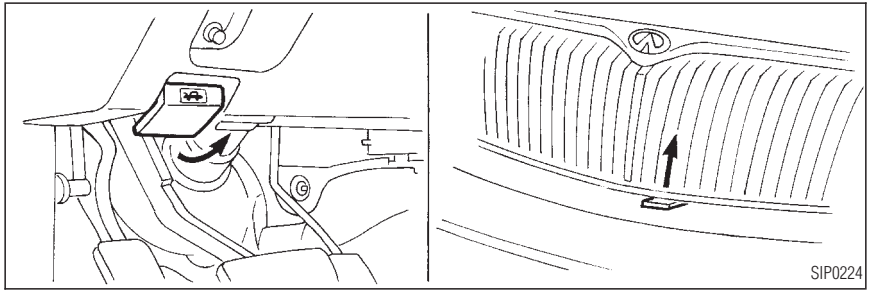

1. Pull the hood lock release handle located below the instrument panel; the hood will then spring up slightly.
2. Pull the lever at the front of the hood with your fingertips and raise the hood.
3. When closing the hood, slowly close the hood and make sure it locks into place.

WARNING

- ***Make sure the hood is completely closed and latched before driving. Failure to do so could cause the hood to fly open and result in an accident.***
- ***If you see steam or smoke coming from the engine compartment, to avoid injury do not open the hood.***

TRUNK LID

WARNING

Do not drive with the trunk lid open. This could allow dangerous exhaust gases to be drawn into the vehicle. See "Precautions when starting and driving" in the "5. Starting and driving" section for exhaust gas.

OPENER OPERATION

The trunk lid release switch is located under the driver's armrest.

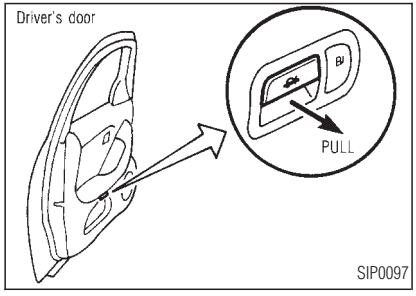

To open the trunk lid, pull the release switch. To close, push the trunk lid down.

Cancel switch

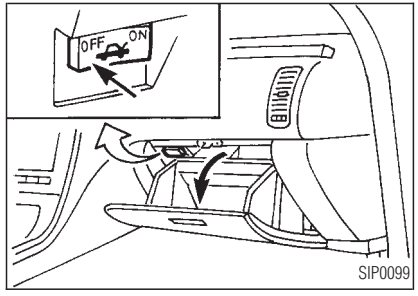

When the cancel switch located inside the glove box is OFF, the trunk lid cannot be opened with the trunk lid release switch or the remote controller. It can be opened only with the master key or wallet key.

KEY OPERATION

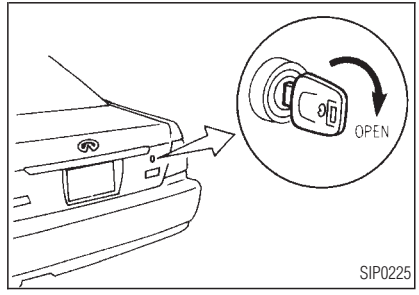

To open the trunk lid, turn the key clockwise. To close remove the key, lower and push the trunk lid down.

AUTO CLOSURE

If the trunk lid is pulled down to a partly open position, the lid will pull itself to the closed position.

Do not apply excessive power when the auto closure is operating. Excessive power applied may cause the mecha-

nism to malfunction.

CAUTION

- ***The lid will automatically close from a partly open position. To avoid pinching, keep hands and fingers away from trunk opening.***
- ***Do not let children operate the closing trunk lid.***

FUEL FILLER LID

OPENER OPERATION

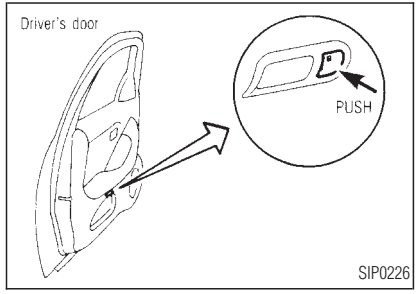

To open the fuel filler lid, push the opener switch. To lock, close the fuel filler lid securely.

Emergency opener

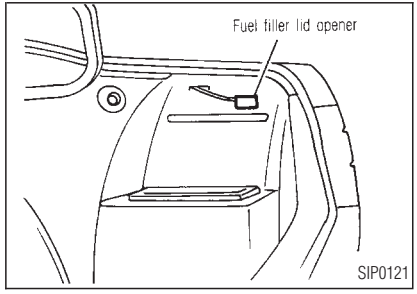

Pulling the mechanical opener located in the trunk room can also open the fuel filler lid.

FUEL FILLER CAP

WARNING

- ***Gasoline is extremely flammable and highly explosive under certain conditions. You could be***

burned or seriously injured if it is misused or mishandled. Always stop engine and do not smoke or allow open flames or sparks near the vehicle when refueling.

- *Fuel may be under pressure. Turn the cap one-half turn, and wait for any hissing sound to stop to prevent fuel from spraying out and possible personal injury. Then remove the cap.*
- *Do not attempt to top off the fuel tank after the fuel pump nozzle shuts off automatically. Continued refueling may cause fuel overflow, resulting in fuel spray and possibly a fire.*
- *Use only a genuine fuel filler cap as a replacement. It has a built-in safety valve needed for proper operation of the fuel system and emission control system. An incorrect cap can result in a serious malfunction and possible injury.*
- *Never pour fuel into the throttle body to attempt to start your vehicle.*

CAUTION

- *If fuel is spilled on the car body, flush it away with water to avoid paint damage.*
- *Tighten until the cap clicks. Failure to tighten the fuel cap properly may cause the SERVICE ENGINE SOON Malfunction indicator light (MIL) to illuminate. If this occurs, securely close the fuel filler cap. After driven for a while, the light should remain off. If the light remains on, have the vehicle inspected by an authorized INFINITI dealer. For additional information, see "Malfunction indicator light (MIL)" in the "2. Instruments and controls" section.*

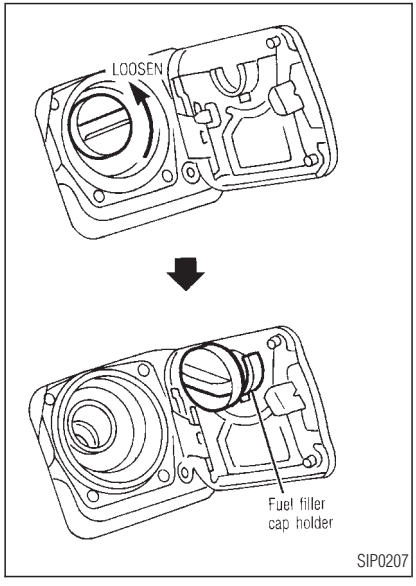

The fuel filler cap is a screw-on ratcheting type. Tighten the cap clockwise until ratcheting clicks are heard.

Put the fuel filler cap on the cap holder while refueling.

STEERING WHEEL

WARNING

Do not adjust the steering wheel while driving. You could lose control of your vehicle and cause an accident.

TILT OPERATION

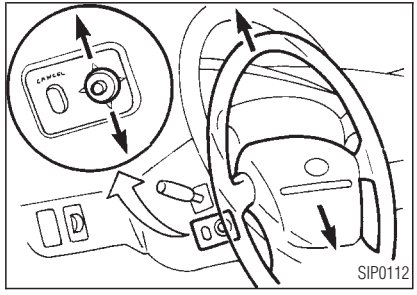

Push the lever to adjust the steering wheel up or down to the desired position.

When the steering column is at the upper extent of its adjustment, pushing the manual switch upward will not move the steering column further. After releasing the switch, the steering wheel may lower slightly. This is not a malfunction.

Jump up operation

The automatic drive positioner system will

make the steering wheel jump up automatically. This lets the driver get into and out of the seat more easily.

TELESCOPIC OPERATION

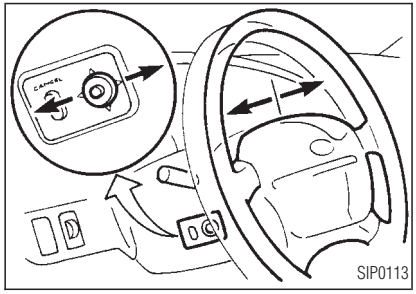

Push the lever to adjust the steering wheel forward or backward to the desired position.

SUN VISORS

USING THE SUN VISORS

⚠ CAUTION

- ***Do not store the main sun visor before storing the sub-sun visor.***
- ***Do not pull the sub-sun visor forcedly downwards.***

1. To block out glare from the front, swing down the main sun visor.
2. To block glare from the side, remove the main sun visor from the center mount and swing it to the side.
3. Then, to block glare from the front too, swing down the sub-sun visor.

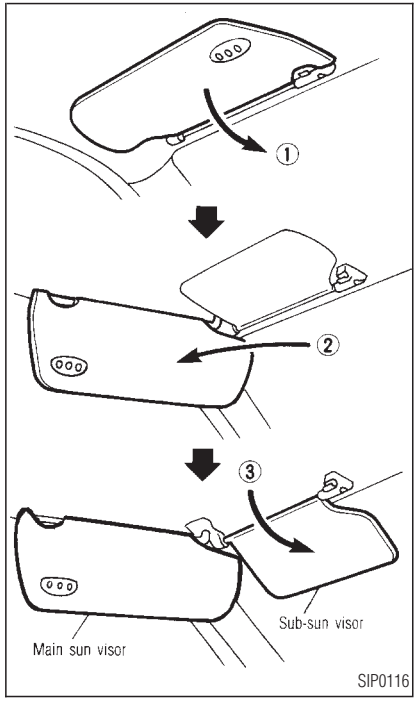

MIRRORS

AUTOMATIC ANTI-DAZZLE INSIDE MIRROR

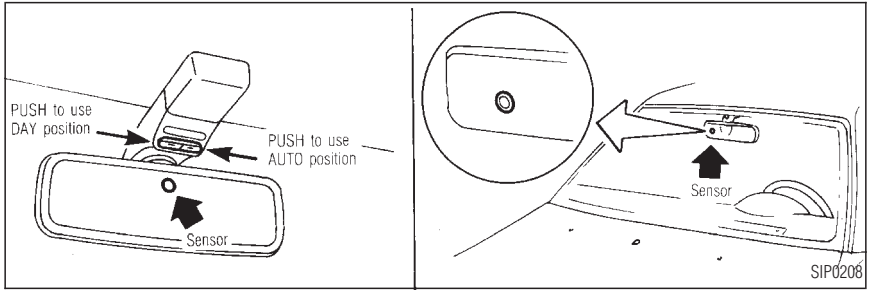

The automatic anti-dazzle inside mirror operates when the ignition key is in the ON position.

The inside mirror is designed so that it automatically changes reflection according to the intensity of the headlight of the following vehicle.

Normally, use the AUTO position.

AUTO position:

Push the AUTO switch. (The indicator light on the AUTO switch will come on.)

The mirror reflection ratio changes automatically according to external lighting and brightness conditions.

DAY position:

Push the DAY switch. (The indicator light on the DAY switch will come on.)

The mirror reflection ratio is held at a high reflection ratio.

Do not hang any object on the sensor or apply glass cleaner. Doing so will reduce the sensitivity of the sensor, resulting in improper operation.

OUTSIDE MIRRORS

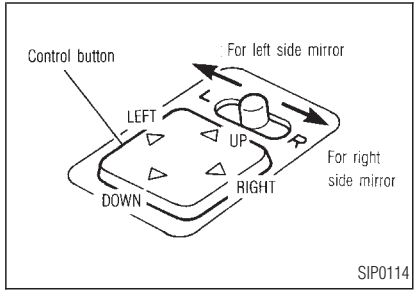

The outside mirror will operate only when the ignition switch is in the ACC or ON position.

Push the switch to the L or R side to select the left or right side mirror, then adjust using the control button.

These mirrors will be heated when the rear window defogger switch is operated.

WARNING

Objects viewed in the outside mirror on the passenger side are closer than they appear. Be careful when moving to the right. Using only this mirror could cause an accident. Use inside mirror or glance over your shoulder to properly judge distances to other objects.

Foldable outside mirrors

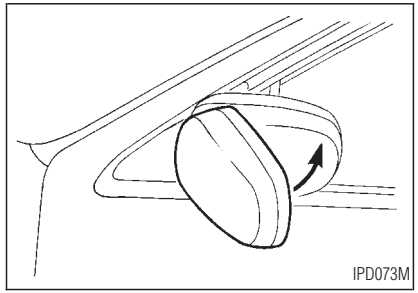

Push the outside mirror backward to fold it.

AUTOMATIC DRIVE POSITIONER

AUTOMATIC DRIVE POSITIONER OPERATION

This system is designed so that the driver's seat and steering column will automatically move when the automatic transmission selector lever is in the P (Park) position. This allows the driver get into and out of the driver's seat more easily.

When one of the following conditions is met, the driver's seat will slide backward and the steering wheel will move up:

- When the key is removed from the ignition switch.
- When the driver's door is opened with the key turned to LOCK.
- When the key is turned from ACC to LOCK with the driver's door open while the automatic transmission selector lever is in the P (Park) position.

When one of the following conditions is met, the driver's seat and steering wheel will return to the positions before being set.

- When the key is inserted into the ignition switch.
- When the driver's door is closed with the key turned to LOCK.

- When the key is turned from ACC to ON while the automatic transmission selector lever is in the P (Park) position.

Procedure for storing memory

Two positions can be stored in the automatic drive positioner memory. **Follow these procedures to use the memory system.**

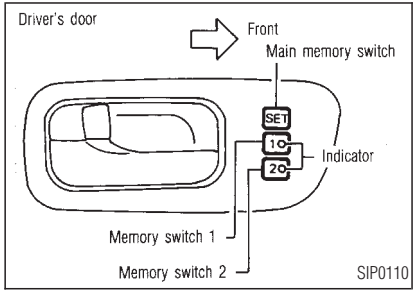

1. Set the automatic transmission selector lever to the P (Park) position.
2. Turn the ignition ON.
3. Adjust the driver's seat and steering column to the desired positions by manually operating each adjusting switch. For additional information, see "Seats" in the "1. Seats, restraints and supplemental air bag systems" section and "Steering wheel" earlier in this section.

   During this step, do not turn the ignition to any positions other than ON.
4. Push the SET switch and, within 5 seconds, push the memory switch 1 or 2.

   The indicator light for the pushed memory switch will come on and stay on for approximately 5 seconds after pushing the switch. After the indicator light goes off, the selected positions are stored in the selected memory (1 or 2).

   If memory is stored in the same memory switch, the previous memory will be deleted.

Confirming memory storage

- Turn the ignition ON and push the SET switch. If the main memory has not been stored, the indicator light will come on for approximately 0.5 seconds. When the memory has stored the position, the indicator light will stay on for approximately 5 seconds.
- If the battery cable is disconnected, or if the fuse blows, the memory will be canceled. In such a case, reset the desired positions using the following procedures.

1. Open and close the driver's door more than two times with the ignition key in the LOCK position.
2. Reset the desired position using the previous procedure.

Selecting the memorized position

1. Set the automatic transmission selector lever to the P (Park) position.

2. Turn the ignition ON.
3. Push the memory switch 1 or 2.

   The driver's seat and steering column will move to the memorized position.

When memory switch 1 or 2 is pushed with the driver's door open and then the key inserted into the ignition switch within approximately 1 minute, the driver's seat and steering column will move to the memorized position.

Cancellation of the system

The automatic drive positioner system will not work or will stop operating under the following conditions:

- when the vehicle speed is above 4 MPH (7 km/h).
- when any two or more of the memory switches are simultaneously pressed while the automatic drive positioner is operating.
- when the adjusting switch for the driver's seat or steering column is turned on while the automatic drive positioner is operating.
- when the cancel switch located on the steering column is pushed in .

Cancel switch

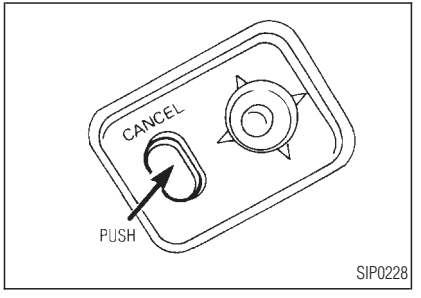

When the cancel switch is pushed in , the automatic drive positioner system will not function.

When the switch is pushed again , the system will function.

4 HEATER, AIR CONDITIONER AND AUDIO SYSTEMS

Ventilators..... 4-2
Heater and air conditioner (Automatic)..... 4-3
Automatic operation 4-4
Manual operation..... 4-5
Ambient temperature switch (AMB)..... 4-5
Operating tips 4-6
Ventilation air filter 4-6
Servicing air conditioner 4-6
Audio system..... 4-7
Radio 4-7
FM radio reception 4-7
AM radio reception..... 4-8
FM-AM radio with cassette player and compact disc (CD) player (Bose)..... 4-9
Steering switch for audio control (Models without Infiniti Communicator) 4-20
Antenna..... 4-20
CB radio or car phone..... 4-21

VENTILATORS

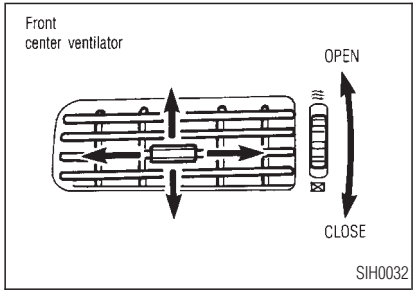

Open or close, and adjust the air flow direction of ventilators.

⊠ : This symbol indicates that the vents are closed.

≋ : This symbol indicates that the vents are open.

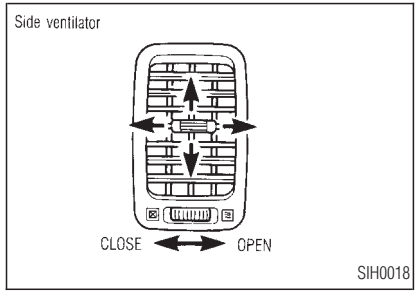

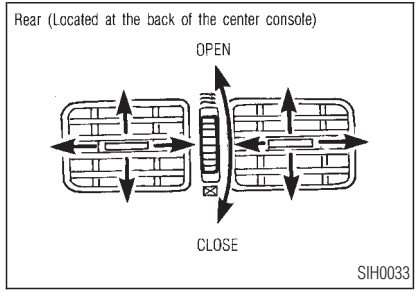

HEATER AND AIR CONDITIONER (Automatic)

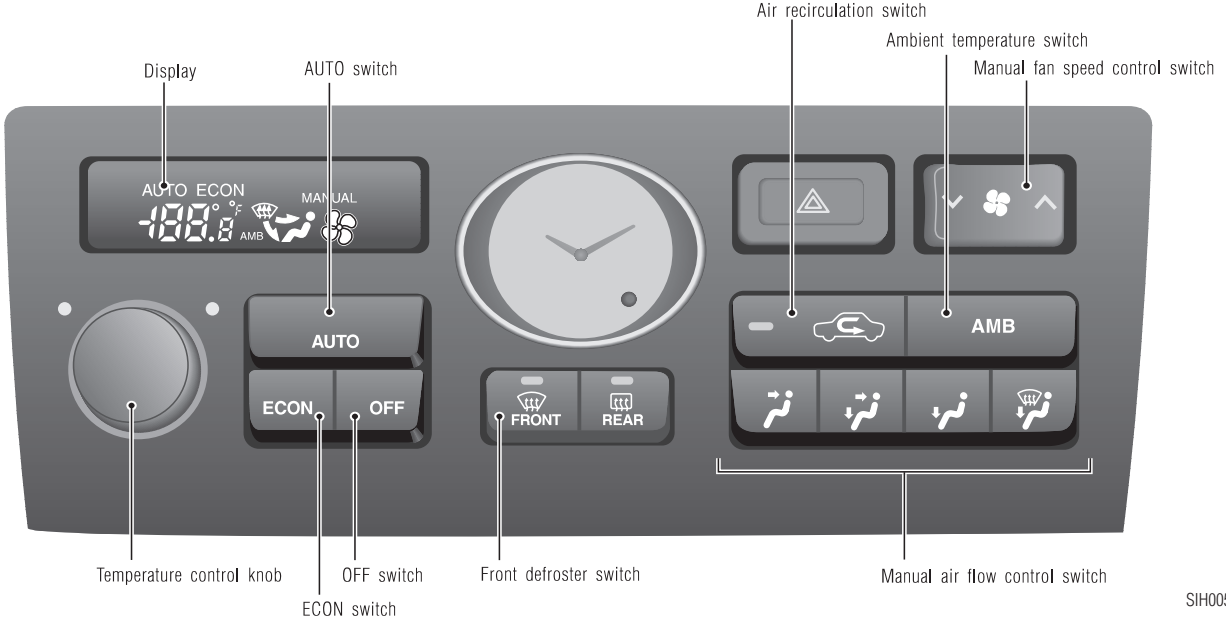

Start the engine and operate the controls to activate the air conditioner.

WARNING

- ***The air conditioner cooling function operates only when the engine is running.***
- ***Do not leave children, unreliable adults, or pets alone in your vehicle. On hot, sunny days, temperatures in a closed vehicle could quickly become high enough to cause severe or possibly fatal injuries to people or animals.***
- ***Do not use the recirculation mode for long periods as it may cause the interior air to become stale and the windows to fog up.***
- ***Positioning of the heater and air conditioner controls should not be done while driving, in order that full attention may be given to the driving operation.***

AUTOMATIC OPERATION

Cooling and/or dehumidified heating (AUTO)

This mode may be used all year round. The system works automatically to maintain a constant temperature. Air flow distribution and fan speed are also controlled automatically.

1. Push the AUTO switch on. (AUTO will appear on the display.)
2. Turn the temperature control knob to set the desired temperature.

- For normal operation, adjust the temperature control knob to about 77°F (25°C).

Heating (ECON)

Use this mode when you need to heat only.

1. Push the ECON (Economy) switch on. (ECON appears on the display.)
2. Turn the temperature control knob to set the desired temperature.

- The temperature of the passenger compartment will be maintained automatically. Air flow distribution and fan speed are also controlled automatically.
- Do not set the temperature lower than the outside air temperature. Otherwise the system may not work properly.
- If the windows fog up, do not use the ECON mode.

Dehumidified defogging

1. Push the front defroster FRONT switch on. (The indicator light on the switch will come on.)

2. Turn the temperature control knob to set the desired temperature.

- To remove ice or fog from the outside of the windows, push the manual fan control switch and set to the maximum position.
- As soon as possible after the windshield is clean, push the AUTO switch to return to the auto mode.
- When the front defroster FRONT switch is pushed, the air conditioner will automatically be turned on at outside temperatures above 30°F (–1°C) to defrost the windshield. The air recirculation mode will automatically be turned off.

  Outside air is drawn into the passenger compartment to improve defrosting performance.

MANUAL OPERATION

Fan speed control

Push the fan control switch to change the fan speed manually.

Push the AUTO switch to return to automatic control of the fan speed.

Air recirculation

Push the air recirculation switch to recirculate interior air inside the vehicle. The indicator light on the switch will come on.

Push it again to draw outside air into the passenger compartment. The indicator will go out.

The air recirculation switch cannot be activated when the air conditioner is in the front defrosting mode FRONT.

Air flow control

Pushing the manual air flow control switch selects the air outlet to provide:

: Air flow from front center, side and rear ventilators.

: Air flow from front center, side and rear ventilators, and front and rear foot outlets.

: Air flow mainly from front and rear foot outlets.

: Air flow from defroster and front and rear foot outlets.

To turn system off

Push the OFF switch.

AMBIENT TEMPERATURE SWITCH (AMB)

Push the ambient temperature switch. The outside ambient temperature will be displayed for approximately 5 seconds.

OPERATING TIPS

When the engine coolant temperature and outside air temperature are low, the air flow from the foot outlets may not operate for 20 to 150 seconds. This is not a malfunction. After the coolant temperature warms up, air flow from the foot outlets will operate normally.

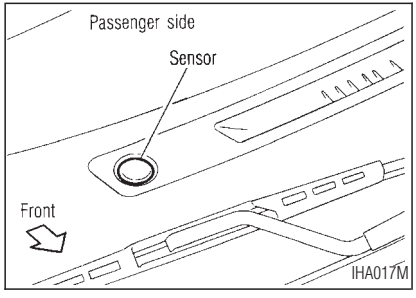

The sensor on the instrument panel helps maintain a constant temperature. Do not put anything on or around this sensor.

VENTILATION AIR FILTER

The air conditioning system is equipped with a ventilation air filter which collects dirt, pollen, dust, etc. To make sure air conditioner heats, defogs, and ventilates efficiently, replace the filter in accordance with the maintenance schedule in this manual. To replace the filter, contact your INFINITI dealer.

The filter should be replaced if air flow is extremely decreased or when windows fog up easily during operating heater or air conditioning system.

SERVICING AIR CONDITIONER

The air conditioning system in your INFINITI is charged with a refrigerant designed with the environment in mind. **This refrigerant will not harm the earth's ozone layer.** However, special charging equipment and lubricant are required when servicing your INFINITI air conditioner. Using improper refrigerants or lubricants will cause severe damage to your air conditioning system. See "Capacities and recommended fuel/lubricants" in the "10. Technical and consumer information" for air conditioning system refrigerant and lubricant recommendations.

Your INFINITI dealer will be able to service your environmentally friendly air conditioning system.

WARNING

The air conditioner system contains refrigerant under high pressure. To avoid personal injury, any air conditioner service should be done only by an experienced technician with proper equipment.

AUDIO SYSTEM

RADIO

Turn the ignition key to ACC or ON and press the power on switch to turn on the radio. If you listen to the radio with the engine not running, the key should be turned to the ACC position.

Radio reception is affected by station signal strength, distance from radio transmitter, buildings, bridges, mountains and other external influences. Intermittent changes in reception quality normally are caused by these external influences.

Using a cellular phone in or near the vehicle may influence radio reception quality.

Radio reception

Your INFINITI radio system is equipped with state-of-the-art electronic circuits to enhance radio reception. These circuits are designed to extend reception range, and to enhance the quality of that reception.

However there are some general characteristics of both FM and AM radio signals that can affect radio reception quality in a moving vehicle, even when the finest equipment is used. These characteristics are completely normal in a given reception area, and do not indicate any malfunction in your INFINITI radio system.

Remember that a moving vehicle is not the ideal place to listen to a radio. Because of the movement, reception conditions will constantly change. Buildings, terrain, signal distance and interference from other vehicles can work against ideal reception. Described below are some of the factors that can affect your radio reception.

FM RADIO RECEPTION

Range: FM range is normally limited to 25 to 30 miles (40 to 48 km), with monaural (single

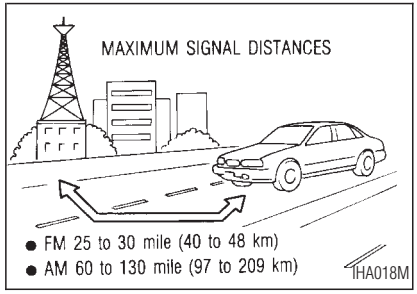

channel) FM having slightly more range than stereo FM. External influences may sometimes interfere with FM station reception even if the FM station is within 25 miles (40 km). The strength of the FM signal is directly related to the distance between the transmitter and receiver. FM signals follow a line-of-sight path, exhibiting many of the same character-

istics as light. For example they will reflect off objects.

Fade and drift: As your vehicle moves away from a station transmitter, the signals will tend to fade and/or drift.

Static and flutter: During signal interference from buildings, large hills or due to antenna position, usually in conjunction with increased distance from the station transmitter, static or flutter can be heard. This can be reduced by adjusting the treble control counterclockwise to reduce treble response.

Multipath reception: Because of the reflective characteristics of FM signals, direct and reflected signals reach the receiver at the same time. The signals may cancel each other, resulting in momentary flutter or loss of sound.

AM RADIO RECEPTION

AM signals, because of their low frequency, can bend around objects and skip along the ground. In addition, the signals can be bounced off the ionosphere and bent back to earth. Because of these characteristics. AM signals are also subject to interference as they travel from transmitter to receiver.

Fading: Occurs while the vehicle is passing through freeway underpasses or in areas with many tall buildings. It can also occur for several seconds during ionospheric turbulence even in areas where no obstacles exist.

Static: Caused by thunderstorms, electrical power lines, electric signs and even traffic lights.

FM-AM RADIO WITH CASSETTE PLAYER AND COMPACT DISC (CD) PLAYER (Bose)

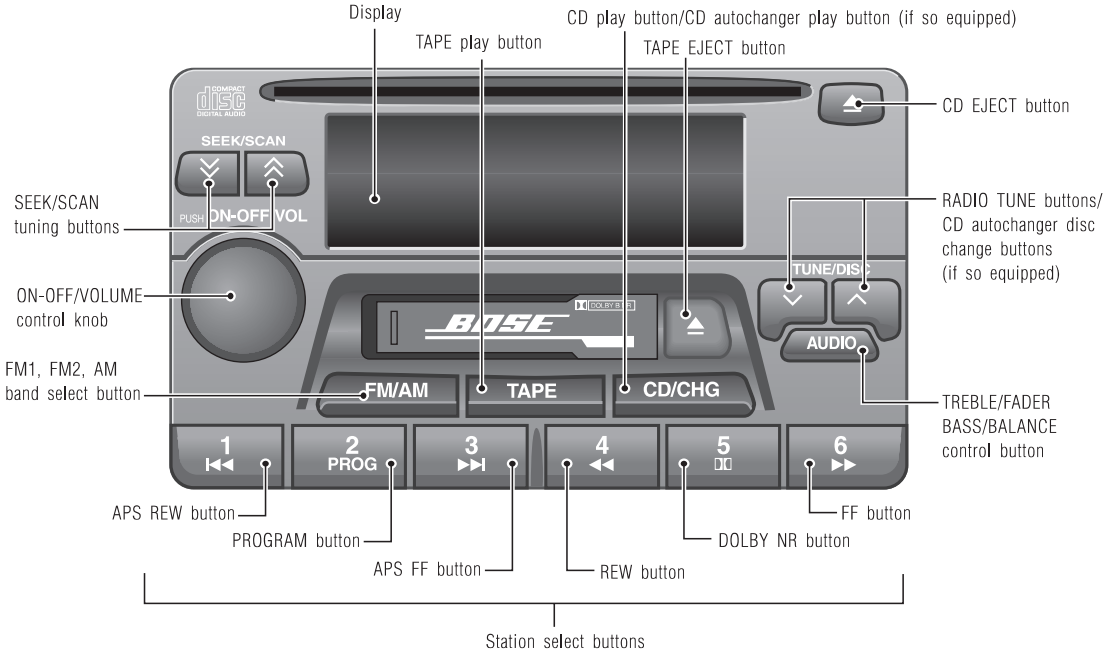

SIH0047A

Audio main operation

Head unit

The radio has an FM diversity reception system, which employs two antennas. One is a rod type antenna; the other is an antenna printed on the window. This system automatically switches to the antenna which is receiving less noise.

The tape deck employs a permalloy head which allows for improved reproduction of high frequency ranges. Noise is also greatly reduced by the combined use of the Dolby NR (Noise Reduction) system. The auto loudness circuit enhances the low frequency range automatically in both radio reception and tape and CD playback.

ON·OFF/Volume control:

Turn the ignition key to ACC or ON, and then push the ON·OFF/VOL control knob while the system is off to call up the mode (radio, tape or CD) which was playing immediately before the system was turned off. When no CD or tape is loaded, the radio will come on. While the system is on, pushing the ON·OFF/VOL control knob turns the system off.

To turn the radio off, press the ON·OFF/VOL control knob.

Turn the ON·OFF/VOL control knob to adjust the volume.

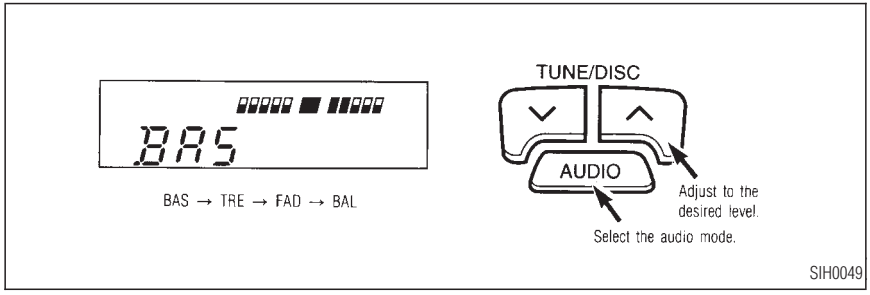

Adjusting tone quality and speaker balance:

To adjust BASS, TRE (Treble), BAL (Balance) and FAD (Fader), press the AUDIO button until the desired mode BAS, TRE, FAD, or BAL appears in the display.

Press the ∨ or ∧ button to adjust Bass (BAS) and Treble (TRE) to the desired level. Use the ∨ or ∧ button also to adjust Fader (FAD) or Balance (BAL) modes.

FAD adjusts the sound level between the front and rear speakers and BAL adjusts the sound between the right and left speakers.

After 10 seconds, the radio or cassette tape display reappears. Once the sound quality is set to the desired level, press the AUDIO button repeatedly until the radio or cassette tape display appears.

FM-AM radio operation

FM/AM band select:

Pushing the FM/AM band select button will change the band FM1, FM2 or AM.

When FM/AM band select button is pushed while the ignition switch is in the ACC or ON, the radio will come on at the station last played.

The last station played will also come on when the power knob is turned to ON.

If a compact disc or tape is playing when the FM/AM band select button is turned to ON, the compact disc or tape will automatically be turned off and the last radio station played will come on.

The FM stereo indicator ST will glow during FM stereo reception. When the stereo broadcast signal is weak, the radio will automatically change from stereo to monaural reception.

TUNE (Tuning):

Use these buttons for manual tuning. To move quickly through the channels, hold either of the TUNE buttons down for more than 0.5 seconds.

WARNING

The radio should not be tuned while driving in order that full attention may be given to the driving operation.

SEEK/SCAN tuning:

SEEK tuning

Push the SEEK/SCAN tuning button or for less than 1.5 seconds. SEEK tuning begins from high to low or low to high frequencies and stops at the next broadcasting station.

SCAN tuning

Push the SEEK/SCAN tuning button or for more than 1.5 seconds. SCAN tuning begins from high to low or low to high frequencies and stops at each broadcasting station for 10 seconds. Pushing the button again during this 10 seconds period will stop SCAN tuning and the radio will remain tuned to that station.

If the SEEK/SCAN tuning button is not pushed within 10 seconds, SCAN tuning moves to the next station.

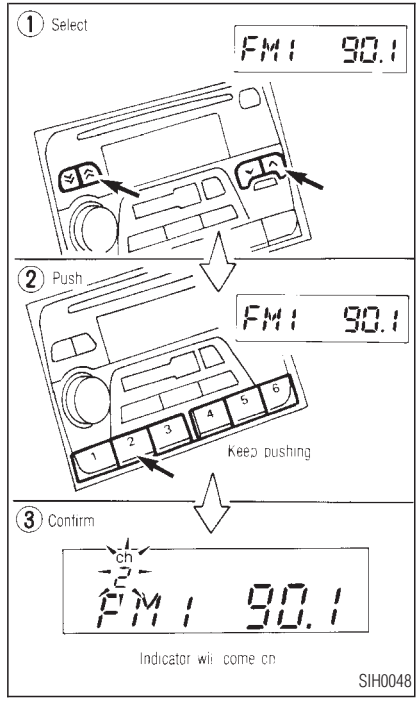

Station memory operations:

Twelve stations can be set for the FM band (six for FM1, six for FM2).

Six stations can be set for the AM band.

1. Tune to the desired station using the SEEK/SCAN or TUNE button.
2. Push the desired station select button for more than 1.5 seconds. (For example, in the diagram ch2 is to be memorized. The radio mutes when the select button is pushed.)
3. The indicator ch2 will then come on and the sound will resume. Memorizing is now complete.
4. Other buttons can be set in the same manner.

If the battery cable is disconnected, or if the fuse blows, the radio memory will be cancelled. In that case, reset the desired stations.

Cassette tape player operation

Turn the ignition key to ACC or ON, and then lightly insert the cassette tape into the tape door. The cassette tape will be automatically pulled into the player.

The radio or CD will turn off (if it is on) and the cassette tape will begin to play.

CAUTION

Do not force the cassette tape into the tape door. This could cause player damage.

If the system is turned off by pushing the ON•OFF/VOL control knob with the cassette tape still in the player, the tape will resume playing when the system is turned back on.

Precautions on cassette tape player operation:

- **To maintain good quality sound, INFINITI recommends that you use cassette tapes of 60 minutes or shorter in length.**
- **Cassette tapes should be removed from the player when not in use. Store cassettes in their protective cases and away from direct sunlight, heat, dust, moisture or magnetic sources.**

  Direct sunlight can cause the cassette to become deformed. The use of deformed cassettes may cause the cassette to jam in the player.
- **Do not use cassettes that have peeling or loose labels. If used, the label could jam in the player.**
- **If a cassette has loose tape, insert a pencil through one of the cassette**

hubs and rewind the tape firmly. Loose tape may cause jamming and wavering sound quality.

- **Over a period of time, the playback head, capstan and pinch roller may gather a tape coating residue as the tape passes over the head. This residue accumulation can cause a weak or wavering sound and should be removed periodically with a head cleaning tape.**

  If the residue is not removed periodically, the player may need to be disassembled for cleaning.

TAPE **PLAY:**

- When the TAPE button is pushed with the system turned off and a tape loaded, the system will come on and the tape will play.
- When the TAPE button is pushed with either the radio or compact disc turned on and the tape loaded, the compact disc or the radio will automatically be turned off and the tape will play.
- If the TAPE button is pushed during either the FF, REW, APS FF or APS REW function, the cassette tape enters the normal play mode.

6 ▶▶ 4 ◀◀ **FF (Fast Forward), REW (Rewind):**

Push the ▶▶ (fast forward) button to fast forward the tape. To rewind the tape, push the ◀◀ (rewind) button. Either the FF or REW symbol illuminates on the right side of the display window.

To stop the FF or REW function, push the ▶▶ (fast forward) or ◀◀ (rewind) again, or the TAPE button.

3 ▶▶| 1 |◀◀ **APS (Automatic Program Search) FF, APS REW:**

When the ▶▶| (APS FF) button is pushed while the tape is being played, the next program will start to play from the beginning. Push the ▶▶| (APS FF) button several times to skip through programs. The tape will advance the number of times the button is pushed (up to nine programs).

When the |◀◀ (APS REW) button is pushed once, the program being played starts over from the beginning. Push the |◀◀ (APS REW) button several times to skip back several selections. The tape will go back the number of times the button is pushed.

Either the FF or REW symbol flashes on the right side of the display window while searching for the selection.

To stop the APS FF or APS REW function, push the TAPE button.

This system searches for the blank intervals between selections. If there is a blank interval within one program or there is no interval between programs, the system may not stop in

the desired or expected location.

2 PROG PROG (Program):

Push the PROG button to change the tape side while the tape is being played.

The cassette tape will automatically change directions to play the other side when the first side is completed.

If the PROG button is pushed during the FF or REW function, the cassette tape enters the normal play mode.

5 Dolby NR (Noise Reduction):

Push the Dolby NR button for Dolby NR encoded tapes to reduce high frequency tape noise. The indicator will come on.

Dolby noise reduction manufactured under license from Dolby Laboratories Licensing Corporation. Dolby NR and the double-D symbol are trademarks of Dolby Laboratories Licensing Corporation.

Metal or chrome tape usage:

The cassette player will be automatically set to high performance play when playing a metal or chrome cassette tape.

TAPE EJECT:

When this button is pushed with the tape loaded, the tape will be ejected.

When the tape is ejected while it is being played, the system will be turned off.

Compact disc (CD) player operation

CAUTION

- ***During cold weather or rainy days, the player may malfunction due to the humidity. If this occurs, remove the CD and dehumidify or ventilate the player completely.***
- ***The player may skip while driving on rough roads.***
- ***The CD player sometimes cannot function when the compartment temperature is extremely high. Decrease the temperature before use.***
- ***Do not expose the CD to direct sunlight.***
- ***CDs that are of poor quality, dirty, scratched, or covered with fingerprints may not work properly.***
- ***Do not use an 8 cm CD adapter as this will cause malfunction.***

Turn the ignition key to the ACC or ON position and insert the CD into the slot with the label side facing up. The CD will be

guided automatically into the slot and start playing.

After loading the disc, the number of tracks on the disc and the play time will appear on the display.

If the radio or tape is already operating, it will automatically turn off and the CD will play.

CAUTION

Do not force the compact disc into the slot. This could damage the player.

If the system has been turned off while the CD was playing, pushing the ON•OFF/VOL control knob will start the CD.

Standard 4 3/4 in (12 cm) discs, and 3 1/8 in (8 cm) discs can be used without an adapter.

CD/CHG PLAY:

Models without CD autochanger:

When the CD/CHG button is pushed with the system off and the CD loaded, the system will turn on and the CD will start to play.

When the CD/CHG button is pushed with the CD loaded but the tape or the radio playing, the tape or radio will automatically be turned off and the compact disc will start to play.

Models with CD autochanger:

- When the CD/CHG button is pushed with the CD loaded in the player and CD autochanger:
  a) When the system is off, the system will turn on and the mode (CD player or CD autochanger) which was playing immediately before the system was turned off will turn on.
  b) When the CD player turns on, the CD player will automatically be turned off and the CD autochanger will turn on.
  c) When the CD autochanger turns on, the CD autochanger will automatically be turned off and the CD player will turn on.
- When the CD/CHG button is pushed with the CD loaded only in the player:
  a) When the system is off, the system will turn on and the CD player will turn on.
  b) When the CD player turns on, the CD player will be turned off and the NO DISC indicator will flash on the display.
  c) When the NO DISC indicator is flashing on the display, the display will go out and the CD player will turn on.
- When the CD/CHG button is pushed with the system off and the CD loaded in only the CD autochanger, the system will turn on and the CD autochanger will turn on.

- When the CD/CHG button is pushed with no disc in either the player or CD autochanger, the NO DISC indicator will flash on the display.

When the CD/CHG button is pushed with the CD loaded in the player and/or CD autochanger but the tape or the radio playing, the tape or radio will automatically be turned off and the CD player or the CD autochanger will turn on.

6 ▶▶ / 4 ◀◀ FF (Fast Forward), REW (Rewind):

When the ▶▶ (fast forward) or ◀◀ (rewind) button is pushed while the CD is being played, the CD will play while fast forwarding or rewinding. When the button is released, the CD will return to normal play speed.

3 ▶▶I / 1 I◀◀ APS (Automatic Program Search) FF, APS REW:

When the ▶▶I (APS FF) button is pushed while the CD is being played, the program next to the present one will start to play from its beginning. Push several times to skip through programs. The CD will advance the number of times the button is pushed. (When the last program on the CD is skipped through, the first program will be played.)

When the I◀◀ (APS REW) button is pushed, the program being played returns to its beginning. Push several times to skip back through programs. The CD will go back the number of times the button is pushed.

2 PROG PROG (Program):

When the PROG button is pushed while the CD is being played, the play pattern will change as follows:

no mark: All the programs will be played repeatedly in sequence.

1: Only one program (the one being played when the PROG button is pushed) will be repeated.

RANDOM: Programs will be played at random, not following the sequence on the CD. The same program may be repeated twice.

When the CD is ejected, the play pattern will automatically change to no mark.

▲ CD EJECT:

When the CD EJECT button is pushed with the CD loaded, the CD will be ejected.

When this button is pushed while the CD is being played, the CD will come out and the system will turn off.

If the CD comes out and is not removed, it will be pulled back into the slot to protect it.

CD IN indicator:

CD IN indicator appears on the display when the CD is loaded with the system on.

Compact disc (CD) autochanger operation (if so equipped)

CD magazine:

Insert the CD magazine into the changer with the label side facing up.

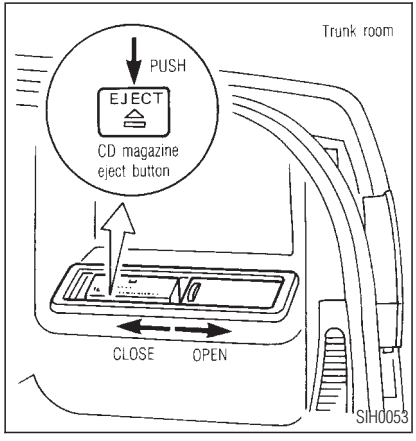

Insert the CD magazine into the changer, as illustrated. Close the sliding lid of the CD autochanger.

When ejecting the CD magazine, press the ⏏ EJECT button located inside the CD autochanger.

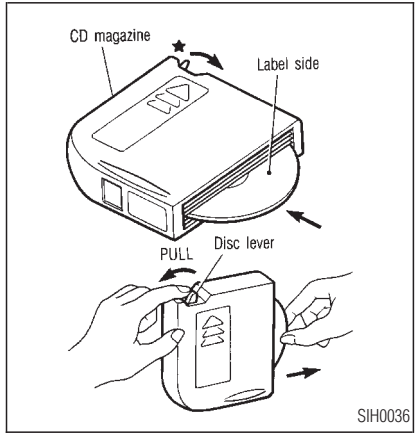

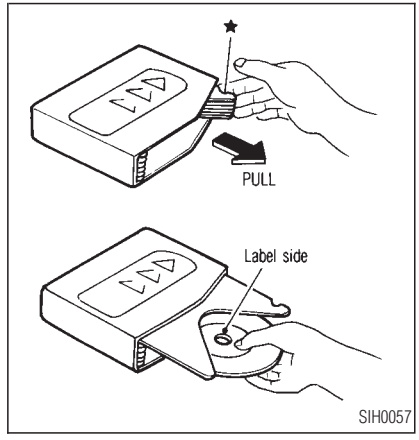

1. Disc loading

- Hold the disc with the label facing up. Load the disc as shown in the illustration.
- When the disc is properly set to the CD magazine, the * marked area (white area) will be raised.

2. Disc removal

- Pull the * marked area with your fingers to partially remove the disc from the magazine.
- Use your fingertips to grasp the edge of the disc. Remove the disc as shown in the illustration.

CAUTION

Do not touch the playing surface of the disc.

Do not use 8 cm discs. They may cause player damage even if using with the optional adapter.

CD/CHG PLAY:

- When the CD/CHG button is pushed with the CD loaded in the player and CD autochanger:
  a) When the system is off, the system will turn on and the mode (CD player or CD autochanger) which was playing immediately before the system was turned off will turn on.
  b) When the CD player turns on, the CD player will automatically be turned off and the CD autochanger will turn on.
  c) When the CD autochanger turns on, the CD autochanger will automatically be turned off and the CD player will turn on.
- When the CD/CHG button is pushed with the CD loaded only in the player:
  a) When the system is off, the system will turn on and the CD player will turn on.
  b) When the CD player turns on, the CD player will be turned off and the NO DISC indicator will flash on the display.
  c) When the NO DISC indicator is flashing on the display, the display will go out and the CD player will turn on.
- When the CD/CHG button is pushed with the system off and the CD loaded in only the CD autochanger, the system will turn on and the CD autochanger will turn on.
- When the CD/CHG button is pushed with no disc in either the player or CD autochanger, the NO DISC indicator will flash on the display.

When the CD/CHG button is pushed with the CD loaded in the player and/or CD autochanger but the tape or the radio playing, the tape or radio will automatically be turned off and the CD player or the CD autochanger will turn on.

DISC change:

Use these buttons for selecting the compact disc inserted into the CD magazine.

See earlier in this section for CD FF, REW, APS FF, APS REW or PROG (Program) operation.

STEERING SWITCH FOR AUDIO CONTROL (Models without Infiniti Communicator)

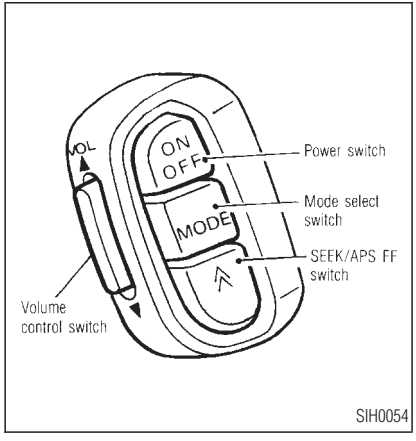

The audio system can be operated using the controls on the steering wheel.

Power switch

With the ignition key turned to the ACC or ON position, push the power switch to turn the audio system ON or OFF.

Mode select switch

Push the mode select switch to change the mode in the sequence of AM, FM1, FM2, Tape, CD and (if so equipped) CD autochanger. When the tape or CD (in the player and/or CD autochanger) is loaded, the mode changes to Tape, CD or CD autochanger.

SEEK/APS FF (Automatic Program Search Fast Forward) switch

- When the switch is pushed with the radio turned on, the frequency changes from low to high and stops automatically at another broadcasting station.
- When the switch is pushed with tape, CD or (if so equipped) CD autochanger operating, the next program will start to play from the beginning. Push the switch several times to skip through programs. The tape, CD or CD autochanger will advance the number of times the switch is pushed.

Volume control switch

Push the upper side or lower side of the switch to adjust the volume.

Upper side: Volume increases

Lower side: Volume decreases

ANTENNA

Power antenna

The antenna will automatically extend when the radio is turned on, and retract when switched off. If the radio is left on, the antenna will retract and extend with the ignition key OFF-ON operation.

CAUTION

- ***Before turning the radio on, make sure that no one is near the antenna outlet and there is enough space for it to extend.***
- ***To prevent damage, be sure that antenna is fully retracted before the vehicle enters an automatic car wash.***
- ***Dirt and other foreign matter on the power antenna rod may interrupt its operation. Clean the rod periodically with a damp cloth. This type of cleaning is especially important during the winter seasons in areas where road salt and other chemicals may be spread on road surfaces and splashed onto the antenna rod.***
- ***If equipped with the Infiniti Communicator system, the power antenna may automatically extend and retract when the battery cable is connected after it has been disconnected. This is normal and does not affect the performance of the audio and Infiniti Communicator systems.***

CB RADIO OR CAR PHONE

If equipped with a genuine cellular phone, your INFINITI features a non-directional microphone on the front interior light, so it is not necessary to look at or speak directly into the microphone when calling.
To do so could detract from the driving operation and cause an accident.

See the manual for car phone operation.

Some models are pre-wired to accept the genuine INFINITI cellular phone. In addition, the some models have the phone antenna built into the rear glass window.

When installing a CB radio or a car phone in your INFINITI, be sure to observe the following cautions, otherwise the new equipment may adversely affect the Multiport Fuel Injection system and other electronic parts.

CAUTION

- ***Keep the antenna as far as possible away from the Electronic Control Unit (including radio).***
- ***Keep the antenna wire more than 8 in (20 cm) away from the Multiport Fuel Injection harness. Do not route the antenna wire next to any harness.***

- *Adjust the antenna standing-wave ratio as recommended by the manufacturer.*
- *Connect the ground wire from the radio chassis to the body.*
- *For details, consult your INFINITI dealer.*

5 STARTING AND DRIVING

Precautions when starting and driving 5-2
Exhaust gas (Carbon monoxide) 5-2
Three way catalyst 5-3
Avoiding collision and rollover 5-4
Drinking alcohol/drugs and driving 5-4
Ignition switch 5-5
Automatic transmission 5-5
Key positions 5-6
Infiniti Vehicle Immobiliser System 5-6
Before starting the engine 5-7
Starting the engine 5-7
Driving the vehicle 5-8
Automatic transmission 5-8
Parking brake 5-14
Cruise control 5-15
Precautions on cruise control 5-15
Cruise control operations 5-15
Break-in schedule 5-17
Increasing fuel economy 5-17
Parking/parking on hills 5-18
Power steering 5-19
Active damper suspension
(if so equipped) 5-19
Brake system 5-20
Anti-lock brake system (ABS) 5-20
Traction control system 5-22
Cold weather driving 5-23
Freeing a frozen door lock 5-23
Anti-freeze 5-23
Battery 5-23
Draining of coolant water 5-23
Tire equipment 5-23
Special winter equipment 5-24
Driving on snow or ice 5-24
Engine block heater (if so equipped) 5-25

PRECAUTIONS WHEN STARTING AND DRIVING

WARNING

Do not leave children, unreliable adults, or pets alone in your vehicle. They could accidentally injure themselves or others through inadvertent operation of the vehicle. Also, on hot, sunny days, temperatures in a closed vehicle could quickly become high enough to cause severe or possibly fatal injuries to people or animals.

EXHAUST GAS (Carbon monoxide)

WARNING

Do not breathe exhaust gases. They contain colorless and odorless carbon monoxide. Carbon monoxide is dangerous. It can cause unconsciousness or death.

- *If you suspect that exhaust fumes are entering the vehicle, drive with all windows fully open, and have the vehicle inspected immediately.*
- *Do not run the engine in closed spaces such as a garage.*
- *Do not park the vehicle with the engine running for any extended length of time.*
- *Keep the trunk lid closed while driving, otherwise exhaust gases could be drawn into the passenger compartment. If you must drive with the trunk lid open follow these precautions:*
  1. *Open all the windows.*
  2. *Set the air recirculation switch OFF and the fan control at high to circulate the air.*
- *If electrical wiring or other cable connections must be routed to a trailer through the seal on the trunk lid or the body, follow the manufacturer's recommendation to prevent carbon monoxide entry into the vehicle.*

- *If a special body or other equipment is added for recreational or other usage, follow the manufacturer's recommendation to prevent carbon monoxide entry into the vehicle. (Some recreational vehicle appliances such as stoves, refrigerator, heaters, etc. may also generate carbon monoxide.)*
- *The exhaust system and body should be inspected by a qualified mechanic whenever:*
  - *a. The vehicle is raised for service.*
  - *b. You suspect that exhaust fumes are entering into the passenger compartment.*
  - *c. You notice a change in the sound of the exhaust system.*
  - *d. You have had an accident involving damage to the exhaust system, underbody, or rear of the vehicle.*

THREE WAY CATALYST

The three way catalyst is an emission control device installed in the exhaust system. Exhaust gases in the three way catalyst are burned at high temperatures to help reduce pollutants.

WARNING

- *The exhaust gas and the exhaust system are very hot. Keep people, animals or flammable materials away from the exhaust pipe.*
- *Do not stop or park the vehicle over flammable materials such as dry grass, waste paper or rags. They may ignite and cause a fire.*

CAUTION

- *Do not use leaded gasoline. Deposits from leaded gasoline seriously reduce the three way catalyst ability to reduce exhaust pollutants.*
- *Keep your engine tuned up. Malfunctions in the ignition, fuel in-*

jection, or electrical systems can cause overrich fuel flow into the three way catalyst, causing it to overheat. Do not keep driving if the engine misfires, or if noticeable loss of performance or other unusual operating conditions are detected. Have the vehicle inspected promptly by an authorized INFINITI dealer.

- ***Avoid driving with an extremely low fuel level. Running out of fuel could cause the engine to misfire, damaging the three way catalyst.***
- ***Do not race the engine while warming it up.***
- ***Do not push or tow your vehicle to start the engine.***

AVOIDING COLLISION AND ROLLOVER

WARNING

Failure to operate this vehicle in a safe and prudent manner may result in loss of control or an accident.

Be alert and drive defensively at all times. Obey all traffic regulations. Avoid excessive speed, high speed cornering, or sudden steering maneuvers, because these driving practices could cause you to lose control of your vehicle. **As with any vehicle, a loss of control could result in a collision with other vehicles or objects, or cause the vehicle to rollover, particularly if the loss of control causes the vehicle to slide sideways.** Be attentive at all times, and avoid driving when tired. Never drive when under the influence of alcohol or drugs (including prescription or over-the-counter drugs which may cause drowsiness). Always wear your seat belt as outlined in the “Seat belts” section of this manual, and also instruct your passengers to do so.

DRINKING ALCOHOL/ DRUGS AND DRIVING

WARNING

Never drive under the influence of alcohol or drugs. Alcohol in the bloodstream reduces coordination, delays reaction time and impairs judgement. Driving after drinking alcohol increases the likelihood of being involved in an accident injuring yourself and others. Additionally, if you are injured in the accident, alcohol can increase the severity of the injury.

INFINITI is committed to safe driving. But, you

must choose not to drive under the influence of alcohol. Every year thousands of people are injured or killed in alcohol related accidents. Although the local laws vary on what is considered to be legally intoxicated, the fact is that alcohol affects all people differently and most people underestimate the effects of alcohol.

Remember, drinking and driving don't mix!

And that's true for drugs too (over the counter, prescription, and illegal drugs). Don't drive if your ability to operate your vehicle is impaired by alcohol, drugs, or some other physical condition.

IGNITION SWITCH

WARNING

Never remove the key while driving. If the key is removed, the steering wheel will lock. This may cause the driver to lose control of the vehicle and could result in serious vehicle damage or personal injury.

AUTOMATIC TRANSMISSION

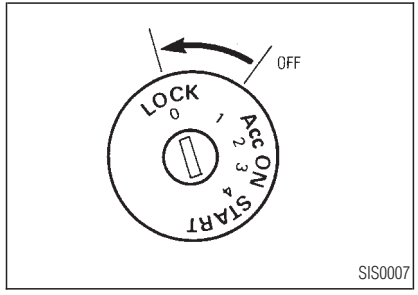

The switch includes an anti-theft steering lock device.

The key can only be removed when the ignition switch is in this LOCK position.

The ignition lock is designed so that the key cannot be turned to LOCK and removed until the selector lever is moved to the P (Park) position.

When removing the key from the ignition, make sure the selector lever is in the P (Park) position.

If the selector lever is not returned to P (Park), the key cannot be moved toward LOCK.

When the key cannot be turned toward the LOCK position, proceed as follows to remove the key:

1. Move the selector lever into the P (Park) position.
2. Turn the ignition key slightly in the ON direction.
3. Turn the key toward the LOCK position.
4. Remove the key.

If the key is removed from the ignition switch,

the select lever cannot be moved from P (Park). **The selector lever can be moved if the ignition switch is in the ON position and the foot brake pedal is depressed.**

To lock the steering wheel, remove the key. To unlock the steering wheel, insert the key and turn it gently while rotating the steering wheel slightly right and left.

Emergency release lever

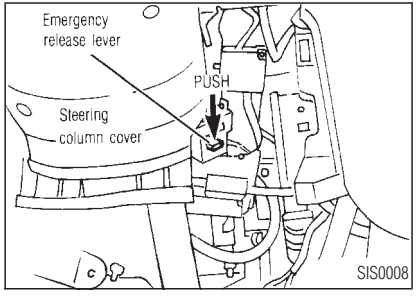

When the battery is discharged, the key may not be released from the ignition switch even if the selector lever is in P (Park). Proceed as follows to remove the key:

1. Remove the instrument lower panel from under the steering column.
2. Push the emergency release lever for ignition key release under the steering column.
3. Turn the key toward the LOCK position.
4. Remove the key from the ignition switch.

KEY POSITIONS

LOCK Normal parking position (0)

OFF (1)

The engine can be turned off without locking the steering wheel.

The ignition lock is designed so that the key cannot be turned to LOCK and removed until the selector lever is moved to the P (Park) position.

ACC (Accessories) (2)

This position activates electrical accessories such as the radio when the engine is not running.

ON Normal operating position (3)

This position turns on the ignition system and the electrical accessories.

START (4)

This position activates the starter motor, starting the engine.

INFINITI VEHICLE IMMOBILISER SYSTEM

The Infiniti Vehicle Immobiliser System will not allow the engine to start without the use of the registered Infiniti Vehicle Immobiliser System key.

If the engine fails to start using the registered

Infiniti Vehicle Immobiliser System key (for example, when interference is caused by another Infiniti Vehicle Immobiliser System key, an automated toll road device or automated payment device on the key ring), restart the engine using the following procedures:

1. Leave the ignition switch in the ON position for approximately 5 seconds.
2. Turn the ignition switch to the OFF or LOCK position, and wait approximately 5 seconds.
3. Repeat step 1 and 2.
4. Restart the engine while holding the device (which may have caused the interference) separate from the registered Infiniti Vehicle Immobiliser System key.

If the no start condition re-occurs, INFINITI recommends placing the registered Infiniti Vehicle Immobiliser System key on a separate key ring to avoid interference from other devices.

BEFORE STARTING THE ENGINE

- Make sure the area around the vehicle is clear.
- Maintenance items listed here should be checked periodically, e.g., each time you check engine oil.
- Check that all windows and lights are clean.
- Visually inspect tires for condition. Also check tire pressure.
- Lock all doors.
- Position seat and adjust head restraints.
- Adjust inside and outside mirrors.
- Fasten seat belts and ask all passengers to do likewise.
- Check the operation of warning lights when key is turned to the ON (3) position.

STARTING THE ENGINE

1. Apply the parking brake.
2. Move the selector lever to P (Park) or N (Neutral). (P preferred.)

The selector lever cannot be moved out of P (Park) and into any of the other gear positions if the ignition key is turned to LOCK, OFF or ACC or if the key is removed from the ignition switch.

The starter is designed not to operate if the selector lever is in one of the driving positions.

3. Crank the engine **with your foot off the accelerator pedal** by turning the ignition key to START. Release the key when the engine starts. If the engine starts, but fails to run, repeat the above procedure.

   — If the engine is very hard to start in extremely cold or hot weather, depress the accelerator pedal and hold

it to help start the engine.

CAUTION

Do not operate the starter for more than 10 seconds at a time. If the engine does not start, turn the key off and wait 10 seconds before cranking again, otherwise the starter could be damaged.

4. **Warm-up**
   Allow the engine to idle for at least 30 seconds after starting. Drive at moderate speed for a short distance first, especially in cold weather.

DRIVING THE VEHICLE

AUTOMATIC TRANSMISSION

The automatic transmission in your vehicle is electronically controlled by a transmission control module to produce maximum power and smooth operation.

Shown on the following pages are the recommended operating procedures for this transmission. Follow these procedures for maximum vehicle performance and driving enjoyment.

Starting the vehicle

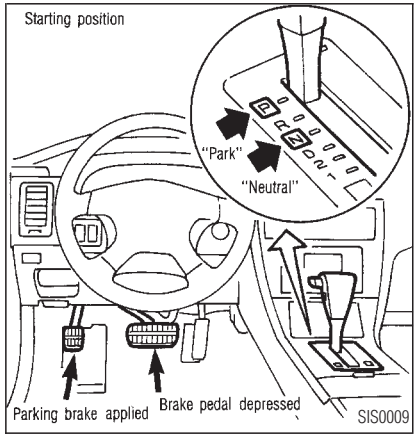

- After starting the engine, fully depress the foot brake pedal before shifting the selector lever to the R (Reverse), N (Neutral), D (Drive), 2 or 1 position. Be sure the vehicle is fully stopped before attempting to shift the selector lever.

This automatic transmission is designed so that the foot brake pedal MUST be depressed before shifting from P (Park) to any drive position while the ignition switch is ON.

The selector lever cannot be moved out of P (Park) and into any of the other gear positions if the ignition key is turned to the LOCK, OFF or ACC position or if the key is removed from the ignition switch.

1. Keep the foot brake pedal depressed and push the selector lever button to shift into a driving gear.
2. Release the parking brake and foot brake, then gradually start the vehicle in motion.

WARNING

- ***If the selector lever cannot be moved from the P (Park) position while the engine is running and the brake pedal is depressed, the stoplights may not work. Malfunctioning stoplights could cause an accident injuring yourself and others.***
- ***Do not depress the accelerator pedal while shifting from P (Park) or N (Neutral) to R (Reverse), D (Drive), 2 or 1. Always depress the brake pedal until shifting is completed. Failure to do so could cause you to lose control and have an accident.***
- ***Cold engine idle speed is high, so use caution when shifting into a forward or reverse gear before the engine has warmed up.***
- ***Never shift to P (Park) or R (Reverse) while vehicle is moving. This could cause an accident.***
- ***On slippery roads, do not downshift. This may cause a loss of control.***

CAUTION

When stopping the vehicle on an uphill grade, do not hold the vehicle by depressing the accelerator pedal. The foot brakes should be used for this purpose.

Shifting

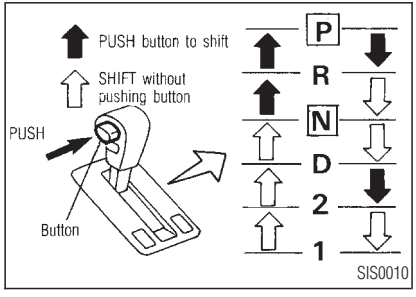

Push the button to shift into P (Park), R (Reverse) or from D (Drive) to 2. All other positions can be selected without pushing the button.

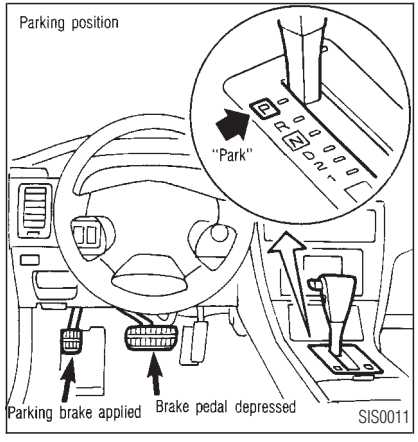

P (Park):

Use this selector position when the vehicle is parked or when starting the engine. Make sure the vehicle is completely stopped. For maximum safety, depress the brake pedal, then push in the selector lever button and move the lever to the P (Park) position. Apply the parking brake. When parking on a hill, apply the parking brake first, then selector the lever into the P (Park) position.

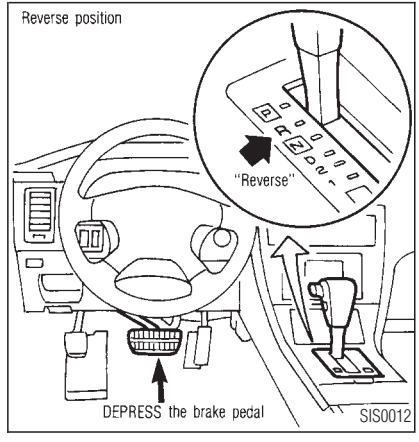

R (Reverse):

Use this position to back up. Always be sure the vehicle is completely stopped when selecting R (Reverse). With the brake pedal

depressed, push in the selector lever button and move the lever to the R (Reverse) position.

N (Neutral):

Neither forward or reverse gear is engaged. The engine can be started in this position. You may shift to N (Neutral) and restart a stalled engine while the vehicle is moving.

D (Drive):

Use this position for all normal forward driving.

2 (Second gear):

Use for hill climbing or engine braking on downhill grades.

Do not downshift into the 2 position at speeds over 62 MPH (100 km/h). Do not exceed 62 MPH (100 km/h) in the 2 position.

1 (Low gear):

Use this position when climbing steep hills slowly or driving slowly through deep snow, sand or mud, or for maximum engine braking on steep downhill grades.

Do not shift into the 1 position at speeds over 62 MPH (100 km/h). Do not exceed 25 MPH (40 km/h) in the 1 position.

Shift lock release

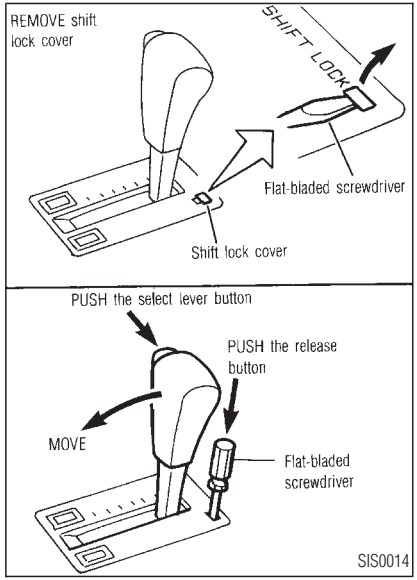

If the battery is discharged, the select lever may not be moved from the P (Park) position even with the brake pedal depressed and the select lever button pushed.

To move the select lever, push the shift lock release button and select lever button. The select lever can be moved to N (Neutral). This allows the vehicle to be moved if the battery is discharged.

To push the shift lock release button, follow the procedure as illustrated.

If there is any problem moving the lever out of P (Park), have your INFINITI dealer check the automatic transmission system as soon as possible.

WARNING

If the selector lever cannot be moved from the P (Park) position while the engine is running and the brake pedal is depressed, the stop lights may not work. Malfunctioning stop lights could cause an accident injuring yourself and others.

Accelerator downshift — In D position —

For passing or hill climbing, fully depress the accelerator pedal to the floor. This shifts the transmission down into second gear or first gear, depending on the vehicle speed.

Overdrive switch

Type A:

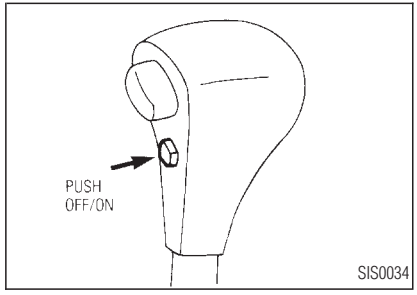

Each time your vehicle is started, the transmission is automatically reset to overdrive ON.

ON: For normal driving the overdrive switch is engaged. The transmission is upshifted into overdrive as the vehicle speed increases.

The overdrive does not engage until the engine has warmed up.

OFF: For driving up and down long slopes where engine braking would be advantageous, push the overdrive switch. The O/D OFF light illuminates. When cruising at a low speed or climbing a gentle slope, you may feel uncomfortable shift shocks as the transmission shifts between third and overdrive repeatedly. In this case, press the overdrive switch. The O/D OFF indicator light comes on at this time.

When driving conditions change, press the overdrive switch again. The O/D OFF indicator light goes out.

Remember not to drive at high speeds for extended periods of time with the O/D OFF light illuminated. This reduces the fuel economy.

Type B:

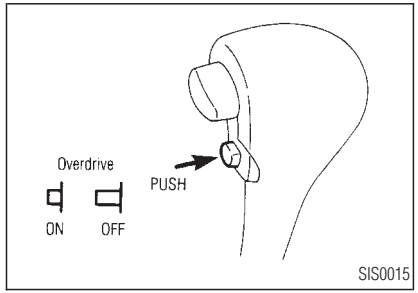

ON: For normal driving, push the overdrive switch ON with the selector lever in the D position. The transmission is upshifted into overdrive as the vehicle speed increases.

The overdrive does not engage until the engine has warmed up.

OFF: For driving up and down long slopes where engine braking would be advantageous, push the overdrive switch OFF . The O/D OFF light illuminates. When cruising at a low speed or climbing a gentle slope, you may feel uncomfortable shift shocks as the transmission shifts between third and overdrive repeatedly. In this case, set the overdrive switch in the OFF position. The O/D OFF indicator light will come on at this time.

When driving conditions change, reset the overdrive switch in the ON position.

Remember not to drive at high speeds for extended periods of time with the overdrive switch set in the OFF position. This reduces the fuel economy.

Fail-safe

When the Fail-safe operation occurs, the next time the key is turned to the ON position, the O/D OFF indicator light will blink for approximately 8 seconds after coming on for 2 seconds. While the vehicle can be driven

under these circumstances please note that the gears in the automatic transmission will be locked in third gear.

If the vehicle is driven under extreme conditions, such as excessive wheel spinning and subsequent hard braking, the Fail-safe system may be activated. This will occur even if all electrical circuits are functioning properly. In this case, turn the ignition key OFF and wait for 3 seconds. Then turn the key back to the ON position. The vehicle should return to its normal operating condition. If it does not return to its normal operating condition have your INFINITI dealer check the transmission and repair if necessary.

PARKING BRAKE

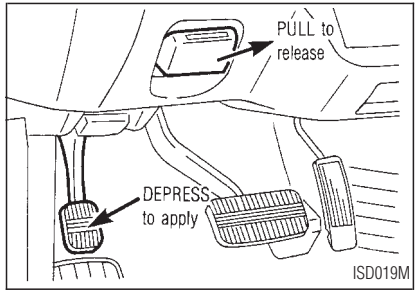

To apply: Fully depress the parking brake pedal.

To release:

1. Firmly apply the foot brake.
2. Move the selector lever to the P (Park) position.
3. Pull the release lever.
4. Before driving, be sure the brake warning light goes out.

⚠ *WARNING*

- ***Be sure the parking brake is fully released before driving. Failure to do so can cause brake failure and lead to an accident.***
- ***Do not release the parking brake from outside the vehicle.***
- ***Do not use the gear shift in place of the parking brake. When parking, be sure the parking brake is fully engaged.***
- ***Do not leave children unattended in a vehicle. They could release the parking brake and cause an accident.***

CRUISE CONTROL

PRECAUTIONS ON CRUISE CONTROL

- If the cruise control system malfunctions, it will cancel automatically. The SET indicator light in the meter assembly will then blink to warn the driver.
- If the SET indicator light blinks, turn the cruise control main switch off and have the system checked by your INFINITI dealer.
- The SET indicator light may sometimes blink when the cruise control main switch is turned ON while pushing the RES/ACCEL, COAST/SET or CANCEL switch (located on the steering wheel). To properly set the cruise control system, perform the steps above in the order indicated.

WARNING

Do not use the cruise control when driving under the following conditions:

- ***it is not possible to keep the vehicle at set speed.***
- ***in heavy traffic or in traffic that varies in speed.***
- ***on winding or hilly roads.***
- ***on slippery roads (rain, snow, ice, etc.)***
- ***in very windy areas.***

Doing so could cause a loss of vehicle control and result in an accident.

CRUISE CONTROL OPERATIONS

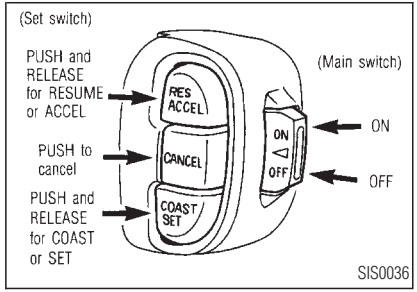

The cruise control allows driving at a speed between 30 to 89 MPH (48 to 144 km/h) without keeping your foot on the accelerator pedal.

To turn on the cruise control, push the main switch on. The CRUISE indicator light will come on.

To set cruising speed, accelerate your vehicle to the desired speed, push the

COAST/SET switch and release it. (The SET indicator light will come on.) Take your foot off the accelerator pedal. Your vehicle will maintain the set speed.

- **To pass another vehicle,** depress the accelerator pedal. When you release the pedal, the vehicle will return to the previously set speed.
- The vehicle may not maintain the set speed when going up or down steep hills. If this happens, drive without the cruise control.

To cancel the preset speed, follow any of these methods:

a) Push the CANCEL button. The SET indicator light will go out.

b) Tap the brake pedal. The SET indicator light will go out.

c) Move the selector lever to the N (Neutral) position. The SET indicator light will go out.

d) Turn the main switch off. Both the CRUISE indicator and SET indicator lights will go out.

- If you depress the brake pedal while pushing the RES/ACCEL or COAST/SET switch and reset at the cruising speed, the cruise control will disengage. Turn the main switch off once and then turn it on again.
- The cruise control will automatically cancel if the vehicle slows down below approximately 8 MPH (13 km/h).

To reset at a faster cruising speed, use one of the following methods:

- Depress the accelerator pedal. When the vehicle attains the desired speed, push and release the COAST/SET switch.
- Push and hold the RES/ACCEL set switch. When the vehicle attains the speed you desire, release the switch.
- Push, then quickly release the RES/ACCEL set switch. Each time you do this, the set speed will increase by about 1 MPH (1.6 km/h).

To reset at a slower cruising speed, use one of the following methods:

- Lightly tap the brake pedal. When the vehicle attains the desired speed, push the COAST/SET switch and release it.
- Push and hold the COAST/SET switch. Release the switch when the vehicle slows down to the desired speed.
- Push, then quickly release the COAST/SET switch. Each time you do this, the set speed will decrease by about 1 MPH (1.6 km/h).

To resume the preset speed, push and release the RES/ACCEL set switch. The vehicle will resume the last set cruising speed when the vehicle speed is over 30 MPH (48 km/h).

BREAK-IN SCHEDULE

Your driving habits during the first 1,000 miles (1,600 km) of vehicle operation are important to the future reliability and economy of your new INFINITI. Listed below are driving recommendations that will allow proper break-in of engine components. Driving the vehicle too hard during the break-in may result in vehicle damage or shortened engine life.

- Do not drive over 55 MPH (90 km/h) and do not run the engine over 4,000 rpm. Avoid driving for long periods at constant speed, either fast or slow.
- Do not accelerate at full throttle in any gear.
- Avoid quick starts.
- Avoid hard braking as much as possible.
- Do not tow a trailer for the first 500 miles (800 km).

INCREASING FUEL ECONOMY

- Accelerate slowly and smoothly. Maintain cruising speeds with a constant accelerator position.
- Drive at moderate speeds on the highway.
- Avoid unnecessary stopping and braking. Keep a safe distance behind other vehicles.
- Select a gear range suitable to road conditions.
- Avoid unnecessary prolonged engine idling.
- Keep your engine tuned up.
- Follow the recommended periodic maintenance schedule.
- Keep the tires inflated at the correct pressure. Improper tire pressure will increase wear and waste fuel.
- Make sure the front wheels are properly aligned. Improper alignment will cause premature tire wear and lower fuel economy.
- Air conditioner operation lowers fuel economy. Use the air conditioner only when necessary.
- When cruising at highway speeds, it is more economical to use the air conditioner and leave the windows closed to reduce drag.

PARKING/PARKING ON HILLS

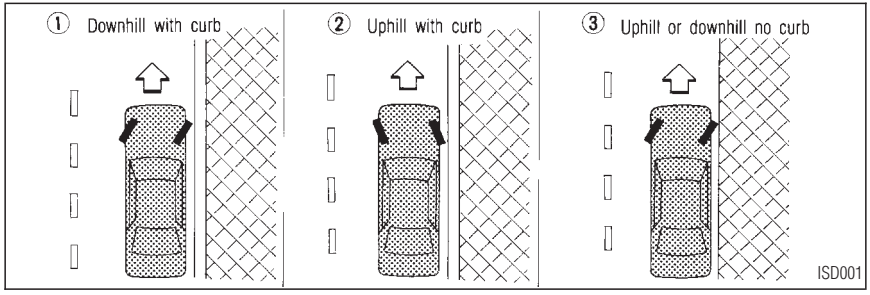

WARNING

- ***Do not park the vehicle over flammable materials such as dry grass, waste paper or rags. They may ignite and cause a fire.***
- ***Never leave the engine running while the vehicle is unattended.***
- ***Never leave children unattended in the vehicle.***

1. Firmly apply the parking brake.
2. Move the selector lever to the P (Park) position.

WARNING

- ***Safe parking procedures require that both the parking brake be set and the transmission placed into P (Park). Failure to do so could cause the vehicle to move unexpectedly or roll away and result in an accident.***
- ***Make sure the automatic transmission shift lever has been pushed as far forward as it can go and cannot be moved without depressing the button at the end of the lever.***

3. To help prevent the vehicle from rolling into the street when parked on a sloping drive way, it is a good practice to turn the wheels as illustrated.

- HEADED DOWNHILL WITH CURB: ①

  Turn the wheels into the curb and move the vehicle forward until the curb side wheel gently touches the curb.

- HEADED UPHILL WITH CURB: ②

  Turn the wheels away from the curb and move the vehicle back until the curb side wheel gently touches the curb.

- HEADED UPHILL OR DOWNHILL, NO CURB: ③

  Turn the wheels toward the side of the road so the vehicle will move away from the center of the road if it moves.

4. Turn the ignition key to the "LOCK" position and remove the key.

POWER STEERING

The power assisted steering is designed to use a hydraulic pump, driven by the engine, to assist steering.

If the engine stops or the drive belt breaks, you will still have control of the vehicle. However, much greater steering effort is needed, especially in sharp turns or at low speeds.

WARNING

If the engine is not running or is turned off while driving, the power assist for the steering will not work. Steering will be much harder to operate.

ACTIVE DAMPER SUSPENSION (if so equipped)

The active damper suspension controls damping force and restrains the movement of the vehicle body. It assures stable driving when the vehicle moves up and down on large rolling roads or when the vehicle rolls at cornering with a high centrifugal force.

The damping force of the shock absorbers can be adjusted to the level you desire. Set the switch to the position you desire while the ignition switch is ON.

Set the switch to the AUTO position for normal driving. The damping force will automatically adjust according to the road surface and driving conditions.

Set the switch to the SPORT position when you desire a firm feeling all the time.

In the event of an electrical system failure, a signal stored in the system's computer memory is automatically sent to the active damper suspension control unit and the actuators. The shock absorbers now function as they would on a vehicle not equipped with the active damper suspension function. Contact an authorized INFINITI dealer for service.

BRAKE SYSTEM

The brake system has two separate hydraulic circuits. If one circuit develops a problem, you will still have braking at two wheels.

Vacuum assisted brakes

The brake booster aids braking by using engine vacuum. If the engine stops, you can stop the vehicle by depressing the brake pedal. However, greater foot pressure on the brake pedal will be required to stop the vehicle and the stopping distance will be longer.

Wet brakes

When the vehicle is washed or driven through water, the brakes may get wet. As a result, your braking distance will be longer and the vehicle may pull to one side during braking.

To dry brakes, drive the vehicle at a safe speed while lightly pressing the brake pedal to heat-up the brakes. Do this until the brakes return to normal. Avoid driving the vehicle at high speeds until the brakes function correctly.

Parking brake bedding

The parking brake shoes must be "bedded down" whenever the stopping effect of the parking brake is weakened or whenever the parking brake shoes and/or drums are replaced, in order to assure the best braking performance.

This procedure is described in the Vehicle service manual and can be performed by your INFINITI dealer.

Using the brakes

Avoid resting your foot on the brake pedal while driving. This will overheat the brakes, wear out the brake linings and pads faster and reduce gas mileage.

To help save the brakes and to prevent the brakes from overheating, reduce speed and downshift to a lower gear before going down a slope or long grade. Overheated brakes may reduce braking performance and could result in loss of vehicle control.

WARNING

- ***While driving on a slippery surface, be careful when braking, accelerating or downshifting. Abrupt braking or accelerating could cause the wheels to skid and result in an accident.***
- ***If the engine is not running or is turned off while driving, the power assist for the brakes will not work. Braking will be harder.***

ANTI-LOCK BRAKE SYSTEM (ABS)

The anti-lock brake system controls the brakes at each wheel so the wheels will not lock when

braking abruptly or when braking on slippery surfaces. The system detects the rotation speed at each wheel and varies the brake fluid pressure to prevent each wheel from locking. By preventing wheel lockup, the system helps the driver maintain steering control and helps to minimize swerving and spinning on slippery surfaces.

Using the system

Depress the brake pedal and hold it down.

WARNING

Do not pump the brake pedal. Doing so may result in increased stopping distances.

Normal operation

The anti-lock brake system will not operate at speeds below 3 to 6 MPH (5 to 10 km/h) to completely stop the vehicle. (The speeds will vary according to road conditions.) When the anti-lock system senses that one or more wheels are close to locking up, the actuator (under the hood) rapidly applies and releases hydraulic pressure (like pumping the brakes very quickly). While the actuator is working, you may feel a pulsation in the brake pedal and hear a noise or vibration from the actuator under the hood. This is normal and indicates that the anti-lock system is working properly. However, the pulsation may indicate that road conditions are hazardous and extra care is required while driving.

Self-test feature

The anti-lock brake system consists of electronic sensors, electric pumps, and hydraulic solenoids controlled by a computer. The computer has a built-in diagnostic feature that tests the system each time you start the engine and move the vehicle at a low speed in forward or reverse. When the self-test occurs, you may hear a clank noise and/or feel a pulsation in the brake pedal. This is normal and is not an indication of any malfunction. If the computer senses any malfunction, it switches the anti-lock brake system OFF and turns on the ABS brake warning light in the dashboard. The brake system will then behave normally, but without anti-lock assistance.

If the light comes on during the self check, or while you are driving, you should take your vehicle to your INFINITI dealer for repair at your earliest convenience.

WARNING

The anti-lock brake system is a sophisticated device, but it cannot prevent accidents resulting from careless or dangerous driving techniques. It can help maintain vehicle control during braking on slippery

surfaces, but remember that the stopping distance on slippery surfaces will be longer than on normal surfaces, even with the anti-lock system. Stopping distances may also be longer on rough, gravel or snow covered roads, or if you are using tire chains. Always maintain a safe distance from the vehicle in front of you. Ultimately, the responsibility for safety of yourself and others rests in the hands of the driver.

Tire type and condition of tires may also affect braking effectiveness.

- ***When replacing tires, install the specified size of tires on all four wheels.***
- ***When installing a spare tire, make sure it is the proper size and type as specified on the tire placard. See "Vehicle identification" in the "10. Technical and consumer information" section for tire placard location.***

TRACTION CONTROL SYSTEM

On slippery surfaces such as wet asphalt roads, vehicle wheels may spin when the vehicle is accelerated. This wheel spin reduces acceleration, or causes the vehicle to swerve, thus decreasing vehicle stability.

When the vehicle drive wheels begin to spin, the traction control system controls the engine torque using an electronic control system and it also controls automatic control shifting if necessary. This reduces spinning of the drive wheels, and results in improved vehicle acceleration performance. It also improves the vehicle's stability by preventing swerving motion.

- Indicator light
  If a malfunction occurs in the traction control system, the SLIP and TCS OFF indicator lights come on in the meter panel. As long as these warning lights are on, the traction control function is canceled. The vehicle will behaves like a model without the traction control system.

WARNING

This system is designed to help prevent the wheels from spinning. However, it does not prevent vehicle slipping or spinning due to abrupt steering operation at high speeds or by careless or dangerous driving techniques. Be especially careful

when driving on slippery surfaces and always drive safely.

COLD WEATHER DRIVING

FREEING A FROZEN DOOR LOCK

To prevent a door lock from freezing, apply de-icer or glycerin through the key hole. If the lock becomes frozen, heat the key before inserting it into the key hole.

Be careful not to damage the plastic part of the key.

ANTI-FREEZE

When it is anticipated that the temperature will drop below 32°F (0°C), check the anti-freeze (ethylene glycol base) to assure proper winter protection. For additional information, see "Engine cooling system" in the "8. Do-it-yourself" section.

BATTERY

If the battery is not fully charged during extremely cold weather conditions, the battery fluid may freeze and damage the battery. To maintain maximum efficiency, the battery should be checked regularly. For additional information, see "Battery" in the "8. Do-it-yourself" section.

DRAINING OF COOLANT WATER

If the vehicle is to be left outside without anti-freeze, drain the cooling system by opening the drain valves located under the radiator and on the engine block. Refill before operating the vehicle. See "Engine cooling system" in the "8. Do-it-yourself" section for changing engine coolant.

TIRE EQUIPMENT

1. SUMMER tires are of a tread design to provide superior performance on dry pavement. However, the performance of these tires will be substantially reduced in snowy and icy conditions. If you operate your vehicle on snowy or icy roads, INFINITI recommends the use of MUD & SNOW or ALL SEASON tires on all four wheels. Please consult your INFINITI dealer for the tire type, size, speed rating and availability information.
2. For additional traction on icy roads, studded tires may be used. However, some provinces and states prohibit their use. Check local, state and provincial laws before installing studded tires.

Skid and traction capabilities of studded snow tires, on wet or dry surfaces, may be poorer than that of non-studded snow tires.

3. Tire chains may be used if desired. Make sure they are of proper size for the tires on your vehicle and are installed according to the chain manufacturer's suggestions.

Use of tire chains may be prohibited according to location. Check the local laws before installing tire chains. When installing tire chains, make sure they are of proper size for the tires on your vehicle and are installed according to the chain manufacturer's suggestions. **Use only SAE Class S chains.** Other types may damage your vehicle. Use chain tensioners when recommended by the tire chain manufacturer to ensure a tight fit. Loose end links of the tire chain must be secured or removed to prevent the possibility of whipping action damage to the fenders or underbody. If possible, avoid fully loading your vehicle when using tire chains. In addition, drive at a reduced speed. Otherwise, your vehicle may be damaged and/or vehicle handling and performance may be adversely affected.

Never install tire chains on a T-type spare tire. Do not use tire chains on dry roads.

SPECIAL WINTER EQUIPMENT

It is recommended that the following items be carried in the vehicle during winter:

1. A scraper and stiff-bristled brush to remove ice and snow from the windows and wiper blades.
2. A sturdy, flat board to be placed under the jack to give it firm support.
3. A shovel to dig the vehicle out of snowdrifts.
4. Extra window washer fluid to refill the reservoir tank.

DRIVING ON SNOW OR ICE

WARNING

- ***Wet ice (32°F, 0°C and freezing rain), very cold snow or ice can be slick and very hard to drive on. The vehicle will have a lot less traction or grip under these conditions. Try to avoid driving on wet ice until the road is salted or sanded.***
- ***Whatever the condition, drive with caution. Accelerate and slow down with care. If accelerating or downshifting too fast, the drive wheels will lose even more traction.***
- ***Allow more stopping distance under these conditions. Braking should be started sooner than on dry pavement.***
- ***Allow greater following distances on slippery roads.***
- ***Watch for slippery spots (glare ice). These may appear on an***

otherwise clear road in shaded areas. If a patch of ice is seen ahead, brake before reaching it. Try not to brake while actually on the ice, and avoid any sudden steering maneuvers.

- ***Do not use cruise control on slippery roads.***
- ***Snow can trap dangerous exhaust gases under your vehicle. Keep snow clear of the exhaust pipe and from around your vehicle.***

ENGINE BLOCK HEATER (if so equipped)

An engine block heater to assist extreme cold temperature starting is available through your INFINITI dealer.

WARNING

Do not use your heater with an ungrounded electrical system or two-pronged (cheater) adapters. You can be injured by an electrical shock if you use an ungrounded connection.

6 IN CASE OF EMERGENCY

Roadside assistance program 6-2
Flat tire 6-2
Changing a flat tire..... 6-2
Jump starting 6-6
Push starting 6-9
If your vehicle overheats..... 6-9
Towing your vehicle 6-10
Towing recommended by INFINITI 6-11
Vehicle recovery (Freeing a stuck vehicle) 6-12

IN CASE OF EMERGENCY

ROADSIDE ASSISTANCE PROGRAM

Every new INFINITI comes with a four year, unlimited mileage Roadside Assistance plan. In the event of a roadside emergency, Roadside Assistance Service is available to you. Please refer to your Warranty Booklet for details. Both the Warranty Booklet and Roadside Assistance Calling Card in your Owner's Literature Portfolio provide the Toll-Free Number to call for assistance. Roadside Assistance is provided 24 hours a day, 365 days a year, for four years from the date sold to give emergency roadside help, in the event of mechanical or nonmechanical trouble(s) such as flat tires, out-of-gas, dead battery, lost keys mechanical breakdown, accident, etc.

FLAT TIRE

CHANGING A FLAT TIRE

If you have a flat tire, follow the instructions below.

Stopping the vehicle

1. Safely move the vehicle off the road and away from traffic.
2. Turn on the hazard warning flashers.
3. Park on a level surface and apply the parking brake. Shift the automatic transmission to P (Park).
4. Turn off the engine.
5. Raise the hood to warn other traffic, and to signal professional road assistance personnel that you need help.
6. Have all passengers get out of the vehicle and stand in a safe place, away from traffic and clear of the vehicle.

WARNING

- ***Make sure that the parking brake is securely applied and the automatic transmission is shifted into P (Park).***
- ***Never change tires when the vehicle is on a slope, ice or slippery areas. This is hazardous.***
- ***Never change tires if oncoming traffic is close to your vehicle. Wait for professional road assistance.***

If needed, Roadside Assistance is available. Please refer to your Warranty Booklet or Roadside Assistance I.D. Card for the toll-free number to call.

Blocking wheels

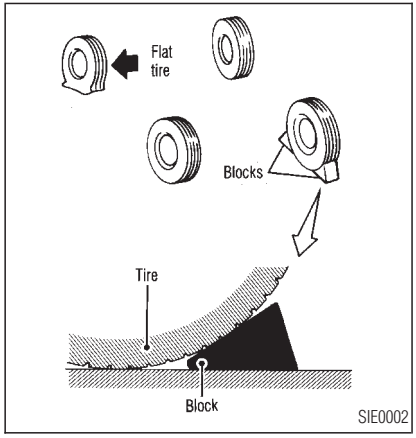

Place suitable blocks at both the front and back of the wheel diagonally opposite the flat tire to prevent the vehicle from rolling when it is jacked up.

WARNING

Be sure to block the wheel as the vehicle may move and cause personal injury.

Getting the spare tire and tools

Jacking tools and spare tire are located inside the trunk as illustrated.

If the spare tire clamp cannot be removed easily, use the jack rod as shown.

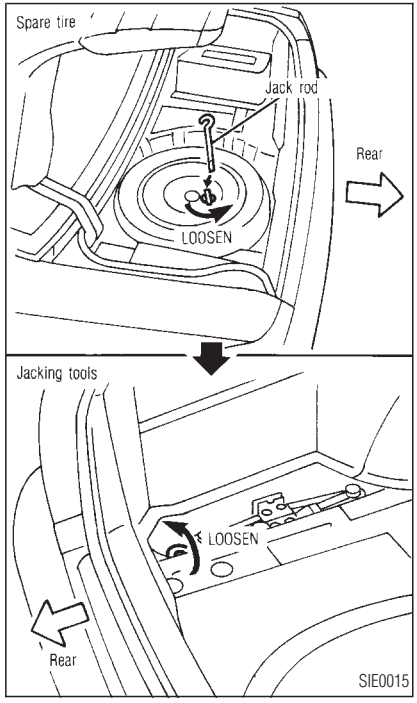

Jacking up vehicle and removing the damaged tire

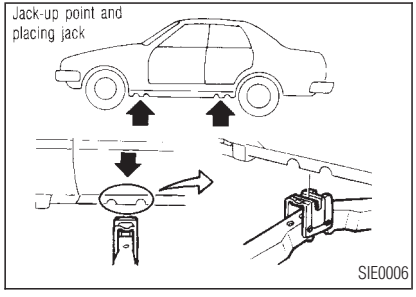

Carefully read the caution label attached to the jack body and the following instructions.

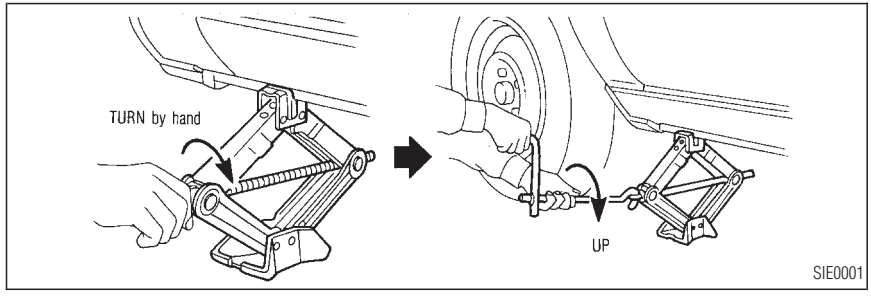

1. Place the jack directly under the jack-up point as illustrated above so that top of the jack contacts the vehicle at the jack up point. Align the center of both the jack head and the notch at the jack up point as shown. Also fit the notched portion of the vehicle in the groove of the jack head as shown.

The jack should be used on level firm ground.

2. Loosen each wheel nut one or two turns by turning counterclockwise with the wheel nut wrench. **Do not remove the wheel nuts until the tire is off the ground.**
3. Carefully raise the vehicle until the tire clears the ground. To lift the vehicle securely hold the jack with both hands as shown above. Remove the wheel nuts, and then remove the tire.

WARNING

- ***Never get under the vehicle while it is supported only by the jack.***

- ***Use only the jack provided with your vehicle. Do not use the jack provided with your vehicle on other vehicles. The jack is designed only for lifting your vehicle during a tire change.***
- ***Use the correct jack up points; never use any other part of the vehicle for jack support.***
- ***Never jack up the vehicle more than necessary.***
- ***Never use blocks on or under the jack.***
- ***Do not start or run engine while vehicle is on the jack, as it may cause the vehicle to move. This is especially true for vehicles with limited slip differential carriers.***
- ***Do not allow passengers to stay in the vehicle while it is on the jack.***

Installing the spare tire

1. Clean mud or dirt from the surface between the wheel and hub.
2. Carefully put the wheel on and tighten the wheel nuts finger tight.

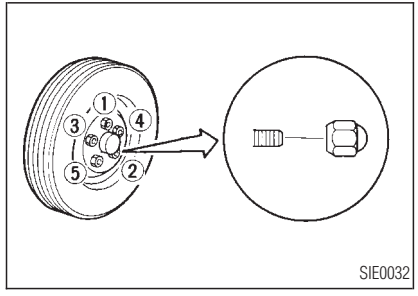

3. With the wheel nut wrench, tighten wheel nuts alternately and evenly until they are tight.
4. Lower the vehicle slowly until the tire touches the ground. Then, with the wheel nut wrench, tighten the wheel nuts securely in the sequence as illustrated.

WARNING

- ***Incorrect wheel nuts or improperly tightened wheel nuts can cause the wheel to become loose or come off. This could cause an accident.***
- ***Do not use oil or grease on the wheel studs or nuts. This could cause the nuts to become loose.***

- **As soon as possible tighten the wheel nuts to the specified torque with a torque wrench.**

Wheel nut tightening torque:
72 to 87 ft-lb
(98 to 118 N·m)

- **Adjust tire pressure to the COLD pressure.**

  COLD pressure:

  After vehicle has been parked for three hours or more or driven less than 1 mile (1.6 km).

  COLD tire pressures are shown on the tire placard located on the front face of the rear left wheel housing inside the vehicle.

- **Retighten the wheel nuts when the vehicle has been run for 600 miles (1,000 km) after installing an aluminum wheel.**

Stowing the damaged tire and tools

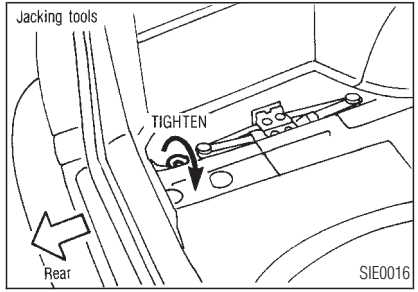

Securely store the damaged tire and jacking equipment in the vehicle.

WARNING

- ***Always make sure that the spare tire and jacking equipment are properly secured after use.***

  Such items can become dangerous projectiles in an accident or sudden stop.

- ***The T-type spare tire and small size spare tire are designed for emergency use. See "Tires and wheels" in the "8. Do-it-yourself" section.***

JUMP STARTING

To start your engine with a booster battery, the instructions and precautions below must be followed.

WARNING

- ***If done incorrectly, jump starting can lead to a battery explosion, resulting in severe injury or***

death. It could also damage your vehicle.

- ***Explosive hydrogen gas is always present in the vicinity of the battery. Keep all sparks and flames away from the battery.***
- ***Do not allow battery fluid to come into contact with eyes, skin, cloth or painted surfaces. Battery fluid is a corrosive sulphuric acid solution which can cause severe burns. If the fluid should come into contact with anything, immediately flush the contacted area with water.***
- ***Keep battery out of the reach of children.***
- ***The booster battery must be rated at 12 volts. Use of an improperly rated battery can damage your vehicle.***
- ***Whenever working on or near a battery, always wear suitable eye protectors (for example, goggles or industrial safety spectacles) and remove rings, metal bands, or any other jewelry. Do not lean over the battery when jump starting.***
- ***Do not attempt to jump start a frozen battery. It could explode and cause serious injury.***
- ***Your vehicle has an automatic engine cooling fan. It could come on at any time. Keep hands and other objects away from it.***

If needed, Roadside Assistance is available. Please refer to your Warranty Information Booklet or Roadside Assistance I.D. Card for the toll-free number to call.

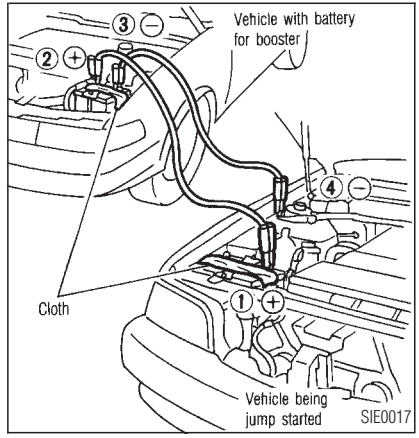

WARNING

Always follow the instructions below. Failure to do so could result in damage to the charging system and cause personal injury.

1. If the booster battery is in another vehicle, position the two vehicles to bring their batteries into close proximity to each other.

   Do not allow the two vehicles to touch.

2. Apply parking brake. Move the selector lever to P (Park). Switch off all unnecessary electrical systems (light, heater, air conditioner, etc.).
3. Remove vent caps on the battery (if so equipped). Cover the battery with an old cloth to reduce explosion hazard.
4. Connect jumper cables in the sequence as illustrated.

CAUTION

- ***Always connect positive (+) to positive (+) and negative (–) to body ground (for example, strut mounting bolt, etc. — not to the battery).***
- ***Make sure that cables do not touch moving parts in the engine compartment and that clamps do not contact any other metal.***

5. Start the engine of the other vehicle and let it run for a few minutes.
6. Keep the engine speed of the other vehicle at about 2,000 rpm, and start your engine in the normal manner.

CAUTION

Do not engage the starter motor for more than 10 seconds. If the engine does not start right away, turn the key off and wait 3 to 4 seconds before trying again.

7. After starting your engine, carefully disconnect the negative cable and then the positive cable.
8. Replace the vent caps (if so equipped). Be sure to dispose of the cloth used to cover the vent holes as it may be contaminated with corrosive acid.

PUSH STARTING

CAUTION

- ***Automatic transmission models cannot be push started. This may cause transmission damage.***
- ***Three way catalyst equipped models should not be started by pushing since the three way catalyst may be damaged.***
- ***Never try to start the vehicle by towing it; when the engine starts, the forward surge could cause the vehicle to collide with the tow vehicle.***

If needed, Roadside Assistance is available. Please refer to your Warranty Booklet or Roadside Assistance I.D. Card for the toll-free number to call.

IF YOUR VEHICLE OVERHEATS

If your vehicle is overheating (indicated by an extremely high temperature gauge reading), or if you feel a lack of engine power, detect abnormal noise, etc., take the following steps:

WARNING

- ***Do not continue to drive if your vehicle overheats. Doing so could cause a vehicle fire.***
- ***To avoid the danger of being scalded, never remove the radiator cap while the engine is still hot. When the radiator cap is removed, pressurized hot water will spurt out, possibly causing serious injury.***
- ***Do not open the hood if steam is coming out.***

1. Move the vehicle safely off the road, apply the parking brake and move the selector lever to P (Park).

   Do not stop the engine.

2. Turn off the air conditioner switch. Open all the windows, move the heater or air conditioner temperature control to maximum hot and fan control to high speed.
3. If engine overheating is caused by climbing a long hill on a hot day, run the engine at a fast idle (approximately 1,500 rpm) until the temperature gauge indication returns to normal.
4. Get out of the vehicle. Look and listen for steam or coolant escaping from the radiator before opening the hood. Wait until no

steam or coolant can be seen before proceeding.

5. Open the engine hood.

WARNING

If steam or water is coming from the engine, stand clear to prevent getting burned.

6. Visually check drive belts for damage or looseness. Also check if the cooling fan is running. The radiator hoses and radiator should not leak water. If coolant is leaking, the cooling fan belt is missing or loose, or the cooling fan does not run, stop the engine.

WARNING

Be careful not to allow your hands, hair, jewelry or clothing to come into contact with, or to get caught in, the cooling fan, or drive belt.

7. After the engine cools down, check the coolant level in the reservoir tank with the engine running. Add coolant to the reservoir tank if necessary. Have your vehicle repaired at the nearest INFINITI dealer.

If needed, Roadside Assistance is available. Please refer to your Warranty Information Booklet or Roadside Assistance I.D. Card for the toll-free number to call.

TOWING YOUR VEHICLE

When towing your vehicle, all State (Provincial in Canada) and local regulations for towing must be followed. Incorrect towing equipment could damage your vehicle. Towing instructions are available from your INFINITI dealer. Local service operators will generally be familiar with the applicable laws and procedures for towing. To assure proper towing and to prevent accidental damage to your vehicle, INFINITI recommends that you have a service operator tow your vehicle. It is advisable to have the service operator carefully read the following precautions.

WARNING

- ***Never ride in a vehicle that is being towed.***

- ***Never get under your vehicle after it has been lifted by a tow truck.***

CAUTION

- ***When towing, make sure that the transmission, axles, steering system and power train are in working condition. If any unit is damaged, dollies must be used.***
- ***Always attach safety chains before towing.***

If needed, Roadside Assistance is available. Please refer to your Warranty Information Booklet or Roadside Assistance I.D. Card for the toll-free number to call.

TOWING RECOMMENDED BY INFINITI

INFINITI recommends that your vehicle be towed with the driving (rear) wheels off the ground as illustrated.

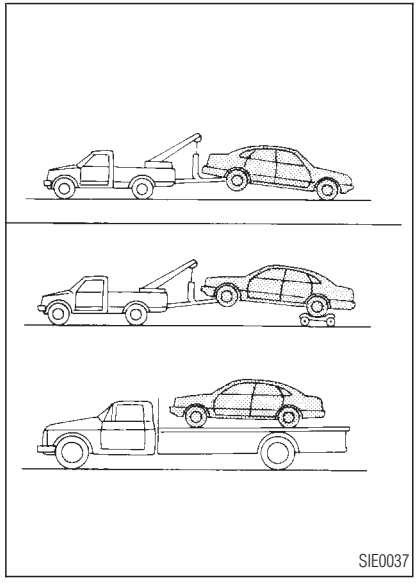

CAUTION

When towing with the front wheels on the ground: Turn the ignition key to the OFF position and secure the steering wheel in a straight-ahead position with a rope or similar device. Never place the ignition key in the LOCK position. This will result in damage to the steering lock mechanism.

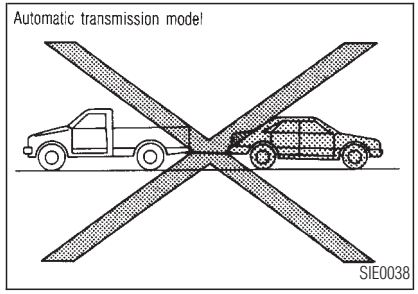

CAUTION

Never tow an automatic transmission model from the rear (backward) with four wheels on the ground as this may cause serious and expensive damage to the transmission.

VEHICLE RECOVERY (Freeing a stuck vehicle)

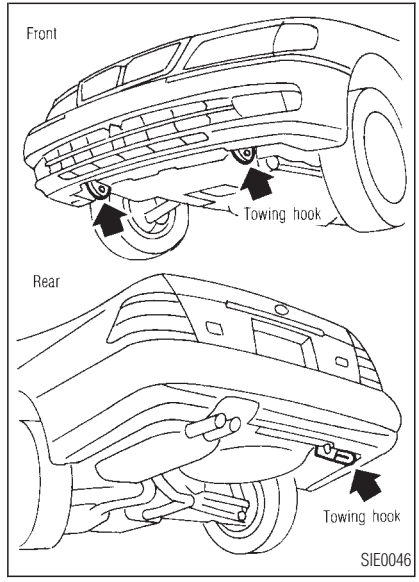

- Use the towing hooks **only** as illustrated, not other parts of the vehicle. Otherwise, the vehicle body will be damaged.
- Use the towing hooks **only** to free a vehicle stuck in sand, snow, mud, etc. **Never** tow the vehicle for a long distance using only the towing hooks.
- The towing hook is under tremendous force when used to free a stuck vehicle. Always pull the cable straight out from the front or rear of the vehicle. **Never** pull on the hook at an angle.
- Stand clear of a stuck vehicle.

WARNING

Do not spin your tires at high speed. This could cause them to explode and result in serious injury. Parts of your vehicle could also overheat and be damaged.

7 APPEARANCE AND CARE

Cleaning exterior 7-2
Washing 7-2
Waxing 7-2
Removing spots 7-3
Underbody 7-3
Glass 7-3
Aluminum alloy wheels 7-4
Chrome parts 7-4
Cleaning interior 7-4
Floor mats 7-4
Seat belts 7-5
Rear sun shade 7-5
Corrosion protection 7-6
Most common factors contributing to vehicle corrosion 7-6
Environmental factors influence the rate of corrosion 7-6
To protect your vehicle from corrosion 7-6

APPEARANCE AND CARE

CLEANING EXTERIOR

In order to maintain the appearance of your vehicle, it is important to take proper care of it.

In the following cases, please wash your vehicle as soon as possible to protect the paint surface.

- after a rainfall to prevent possible damage from acid rain
- after driving on coastal roads
- when contaminants such as soot, bird droppings, tree sap, metal particles or bugs get on the paint surface
- when dust or mud builds up on the surface

Whenever possible, store or park your vehicle inside a garage or in a covered area.

When it is necessary to park outside, park in a shady area or protect the vehicle with a body cover.

Be careful not to scratch the paint surface when putting on or removing the body cover.

WASHING

Thoroughly rinse surface dirt off the vehicle with a wet sponge and plenty of clean water. Clean the vehicle thoroughly using a mild soap such as Nissan Car Wash, or a general purpose dishwashing liquid mixed with clean, lukewarm (never hot) water. Rinse the vehicle again with plenty of clean water.

Inside flanges, seams and folds on the doors, hatches and hood are particularly vulnerable to the effects of road salt. Therefore, these areas must be regularly cleaned. Make sure that the drain holes in the lower edge of the door are open. Spray water under the body and in the wheel wells to loosen the dirt and wash away road salt.

Avoid leaving water spots on the paint surface by using a damp chamois to dry the vehicle.

⚠ *CAUTION*

- ***Do not use strong household soap, strong chemical detergents, gasoline or solvents.***
- ***Do not wash the vehicle in direct sunlight or while the vehicle body is hot, as the surface may become water-spotted.***
- ***Avoid using tight-napped or rough cloths, such as washing mitts. Care must be taken when removing caked-on dirt or other foreign substances so that the paint surface is not scratched or damaged.***

WAXING

If you wish to wax your vehicle, only use a wax specified for use over clear coats, such as Nissan Liquid or Spray Wax, because your

INFINITI has been finished with the finest paint and hard clear coats. Your INFINITI dealer can assist you in choosing the proper product.

- Wax your vehicle only after a thorough washing. Follow the instructions supplied with the wax.
- Do not use a wax containing any abrasives, cutting compounds or cleaners that may damage the vehicle finish.
- If the surface does not polish easily, use a road tar remover and wax again.

Machine compound or aggressive polishing on a base coat/clear coat paint finish may dull the finish or leave swirl marks.

REMOVING SPOTS

Remove tar and oil spots, industrial dust, insects, and tree sap as quickly as possible from the paint surface to avoid lasting damage or staining. Special cleaning products are available at your INFINITI dealer or automotive accessory stores.

UNDERBODY

In areas where road salt is used in winter, the underbody must be cleaned regularly. This will prevent dirt and salt from building up and causing underbody and suspension corrosion. Before the winter period and again in the spring, the underseal must be checked and, if necessary, re-treated.

GLASS

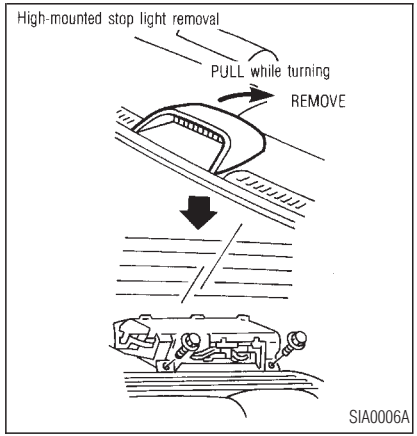

When cleaning the rear window, it may be easier to clean if the high-mounted stop light is removed first.

Be careful when removing the high-mounted stop light to reduce the risk of damaging the high-mounted stop light wires.

The high-mounted stop light must be properly reinstalled before driving your vehicle.

Use glass cleaner to remove smoke and dust film from the glass surfaces. It is normal for glass to become coated with a film after the vehicle is parked in the hot sun. Glass cleaner and a soft cloth will easily remove this film.

CAUTION

When cleaning the inside of the window, do not use sharp-edged tools, abrasive cleaners or chlorine based disinfectant cleaners. They could damage the rear window defroster.

ALUMINUM ALLOY WHEELS

Wash regularly, especially during winter months in areas where road salt is used. Salt could discolor the wheel if not removed.

CHROME PARTS

Clean chrome parts regularly with a non-abrasive chrome polish to maintain the finish.

CLEANING INTERIOR

Occasionally remove loose dust from the interior trim, plastic parts and seats using a vacuum cleaner or soft brush. Wipe the vinyl and leather surfaces with a clean, soft cloth dampened in mild soap solution, then wipe clean with a dry soft cloth. Before using any fabric protector, read the manufacturer's recommendations. Some fabric protectors contain chemicals that may stain or bleach the seat material.

CAUTION

- ***Never use benzine, thinner, or any similar material.***
- ***The leather seats should be regularly coated with a leather wax like saddle soap. Never use car wax.***
- ***Never use fabric protectors unless recommended by the manufacturer.***

FLOOR MATS

The use of genuine floor mats can extend the life of your vehicle carpet and make it easier to clean the interior. **No matter what mats are used, be sure they are fitted for your vehicle and are properly positioned in the footwell to prevent interference with pedal operation.** Mats should be maintained with regular cleaning and replaced if they become excessively worn.

Floor mat positioning aid (Driver side only)

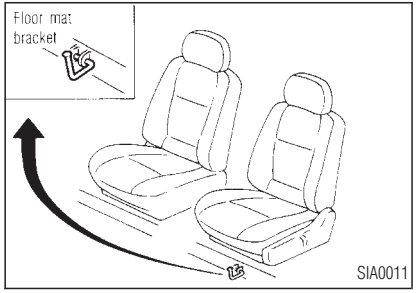

This model includes a front floor mat bracket to act as a floor mat positioning aid. INFINITI floor mats, specially designed for your vehicle, incorporate grommets. To install, simply position the mat using the floor mat bracket through the floor mat grommet hole while centering the mat in the floor pan contour.

Periodically check to make certain that the mats are properly positioned.

SEAT BELTS

The seat belts can be cleaned by wiping them with a sponge dampened in a mild soap solution. Allow the belts to dry completely before using them.

WARNING

Do not allow wet belts to roll up in the retractor. NEVER use bleach, dye, or chemical solvents since these may severely weaken the seat belt webbing.

REAR SUN SHADE

Screen

To clean, fully extend the rear sun shade screen and clean dust or dirt off using a vacuum cleaner from the inside of the compartment. See “Rear sun shade” in the “2. Instruments and controls” section for rear sun shade operation.

CAUTION

Be careful not to damage the screen while cleaning.

Cover

Wipe the rear sun shade cover with a clean, dry cloth.

CAUTION

Never use benzine, thinner or any other neutral detergent as this may deform the cover.

CORROSION PROTECTION

MOST COMMON FACTORS CONTRIBUTING TO VEHICLE CORROSION

1. The accumulation of moisture-retaining dirt and debris in body panel sections, cavities, and other areas.
2. Damage to paint and other protective coatings caused by gravel and stone chips or minor traffic accidents.

ENVIRONMENTAL FACTORS INFLUENCE THE RATE OF CORROSION

Moisture

Accumulation of sand, dirt and water on the vehicle body underside can accelerate corrosion. Wet floor coverings will not dry completely inside the vehicle, and should be removed for drying to avoid floor panel corrosion.

Relative humidity

Corrosion will be accelerated in areas of high relative humidity, especially those areas where the temperatures stay above freezing where atmospheric pollution exists, or where road salt is used.

Temperature

A temperature increase will accelerate the rate of corrosion to those parts which are not well ventilated.

Air pollution

Industrial pollution, the presence of salt in the air in coastal areas, or heavy road salt use will accelerate the corrosion process. Road salt will also accelerate the disintegration of paint surfaces.

TO PROTECT YOUR VEHICLE FROM CORROSION

- Wash your vehicle often to keep the vehicle clean.
- Always check for minor damage to the paint and repair it as soon as possible.
- Keep drain holes at the bottom of the doors open to avoid water accumulation.
- Check the underbody for accumulation of sand, dirt or salt. If present, wash with water as soon as possible.

CAUTION

- ***NEVER remove dirt, sand or other debris from the passenger compartment by washing it out with a hose. Remove dirt with a vacuum cleaner or broom.***
- ***Never allow water or other liquids to come in contact with electronic components inside the vehicle as this may damage them.***

- ***See your INFINITI dealer for assistance.***

Chemicals used for road surface de-icing are extremely corrosive. They accelerate corrosion and deterioration of underbody components such as the exhaust system, fuel and brake lines, brake cables, floor pan and fenders.

In winter, the underbody must be cleaned periodically.

For additional protection against rust and corrosion, which may be required in some areas, consult your local INFINITI dealer.

8 DO-IT-YOURSELF

Maintenance precautions 8-2
Engine compartment check locations 8-4
Engine cooling system 8-5
Checking engine coolant level 8-5
Changing engine coolant 8-6
Engine oil 8-7
Checking engine oil level 8-7
Changing engine oil 8-8
Changing engine oil filter 8-10
Automatic transmission fluid 8-10
Temperature conditions for checking 8-10
Power steering fluid 8-12
Brake fluid 8-13
Window washer fluid 8-13
Battery 8-14
Drive belts 8-15
Spark plugs 8-16
Replacing spark plugs 8-16
Air cleaner 8-17
Windshield wiper blades 8-17
Cleaning 8-17
Replacing 8-18
Parking brake and brake pedal 8-19
Checking parking brake 8-19
Checking brake pedal 8-19
Brake booster 8-20
Fuses 8-21
Engine compartment 8-21
Passenger compartment 8-22
Lights 8-23
Headlights 8-24
Exterior and interior lights 8-26
Tires and wheels 8-33
Tire pressure 8-33
Types of tires 8-34
Tire chains 8-34
Changing tires and wheels 8-35

MAINTENANCE PRECAUTIONS

When performing any inspection or maintenance work on your vehicle, always take care to prevent serious accidental injury to yourself or damage to the vehicle. The following are general precautions which should be closely observed.

WARNING

- *Park the vehicle on a level surface, apply the parking brake securely and block the wheels to prevent the vehicle from moving. Move the selector lever to P (Park).*
- *Be sure the ignition key is OFF or LOCK when performing any parts replacement or repairs.*
- *Your vehicle is equipped with an automatic engine cooling fan. It may come on at any time without warning, even if the ignition key is in the OFF position and the engine is not running. To avoid injury, always disconnect the negative battery cable before working near the fan.*
- *If you must work with the engine running, keep your hands, clothing, hair and tools away from moving fans, belts and any other moving parts.*
- *It is advisable to remove necktie and any jewelry, such as rings, watches, etc. before working on your vehicle.*
- *Always wear eye protection whenever you work on your vehicle.*
- *If you must run the engine in an enclosed space such as a garage, be sure there is proper ventilation for exhaust gases.*
- *Never get under the vehicle while it is supported only by a jack. If it is necessary to work under the vehicle, support it with safety stands.*
- *Keep smoking materials, flame and sparks away from fuel and the battery.*
- *The fuel filter or fuel lines should be serviced by an INFINITI dealer because the fuel lines are under high pressure even when the engine is off.*

CAUTION

- ***Do not work under the hood while the engine is hot. Turn off the engine and wait until it cools down.***
- ***Never connect or disconnect either the battery or any transistorized component connector while the ignition key is on.***
- ***Never leave the engine or the automatic transmission related component harness connector disconnected while the ignition is on.***
- ***Avoid direct contact with used engine oil. Improperly disposed motor oil and/or other vehicle fluids can hurt the environment. Always conform to local regulations for disposal of vehicle fluid.***

This “8. Do-it-yourself” section gives instructions regarding only those items which are relatively easy for most owners to perform. More involved service should be done by your INFINITI dealer.

You should be aware that incomplete or improper servicing may result in operating difficulties or excessive emissions, and could affect your warranty coverage. **If in doubt about any servicing, have it done by your INFINITI dealer.**

ENGINE COMPARTMENT CHECK LOCATIONS

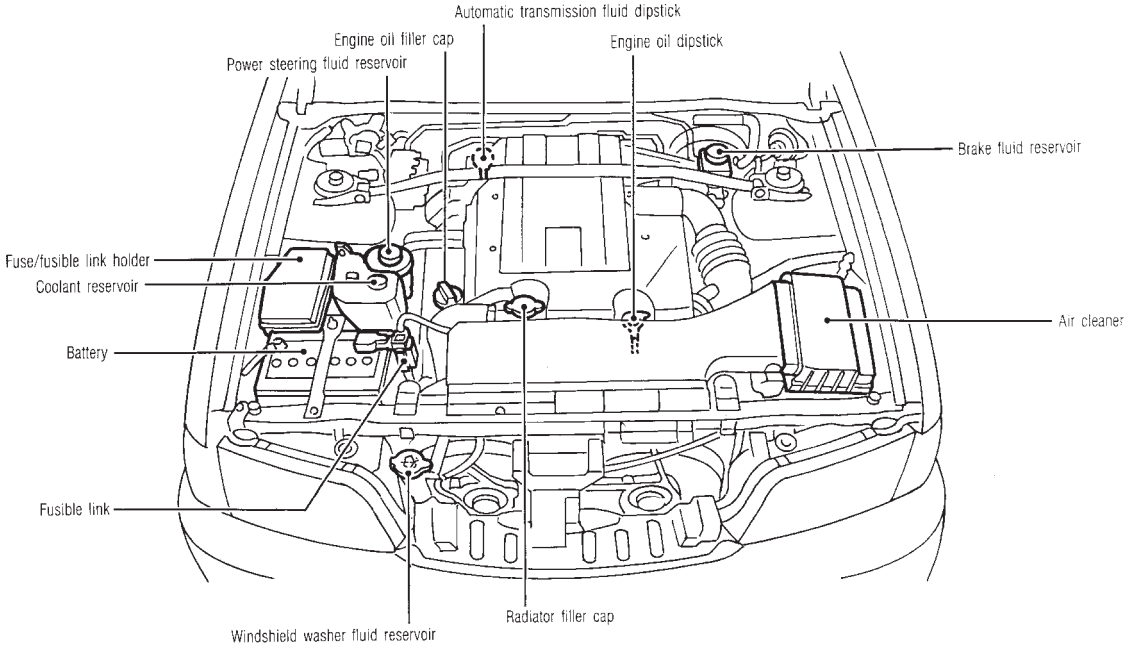

SID0128

ENGINE COOLING SYSTEM

The engine cooling system is filled at the factory with a high-quality, year-round, anti-freeze coolant solution. The anti-freeze solution contains rust and corrosion inhibitors, therefore additional cooling system additives are not necessary.

CAUTION

When adding or replacing coolant, use only a genuine Nissan anti-freeze coolant or equivalent with the proper mixture ratio of 50% anti-freeze and 50% demineralized water/distilled water. The use of other types of coolant solutions may damage your engine cooling system.

Outside temperature down to		Anti-freeze	Demineralized water or distilled water
°C	°F		
−35	−30	50%	50%

WARNING

- ***Never remove the radiator filler cap when the engine is hot. Serious burns could be caused by high pressure fluid escaping from the radiator. Wait until the engine and radiator cool down. See "If your vehicle overheats" in the "6. In case of emergency" section.***
- ***The radiator is equipped with a pressure cap. Use only a genuine cap as a replacement.***

CHECKING ENGINE COOLANT LEVEL

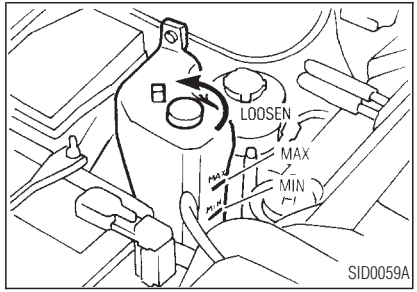

Check the coolant level in the reservoir tank when the engine is cold. If the coolant level is below MIN, add coolant up to the MAX level. If the reservoir tank is empty, check the coolant level in the radiator **when the engine is cold.** If there is insufficient coolant in the radiator, fill the radiator with coolant up to the filler opening and also add it to the reservoir tank up to the MAX level.

If the cooling system requires coolant

frequently, have it checked by your INFINITI dealer.

CHANGING ENGINE COOLANT

- Major cooling system repairs should be performed by your INFINITI dealer. The service procedures can be found in the appropriate INFINITI Service Manual.
- Improper servicing can result in reduced heater performance and engine overheating.

WARNING

- ***To avoid the danger of being scalded, never change the coolant when the engine is hot.***
- ***Never remove the radiator cap when the engine is hot. Serious burns could be caused by high pressure fluid escaping from the radiator.***

1. Park the vehicle in the shade and set the air conditioner temperature control to the maximum hot temperature after turning the ignition key to the ON position. Then turn the ignition key to the OFF or LOCK position.

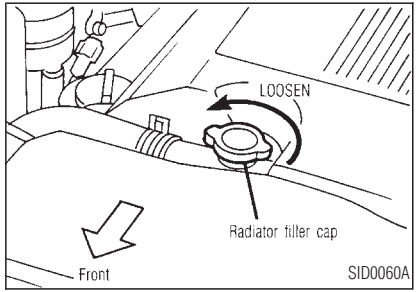

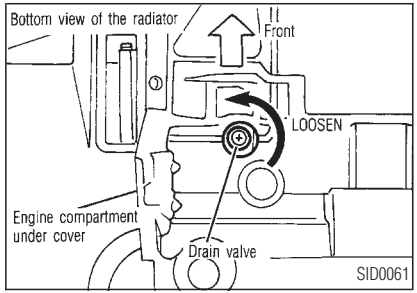

2. Open the radiator filler cap and drain valve at the bottom of the radiator.

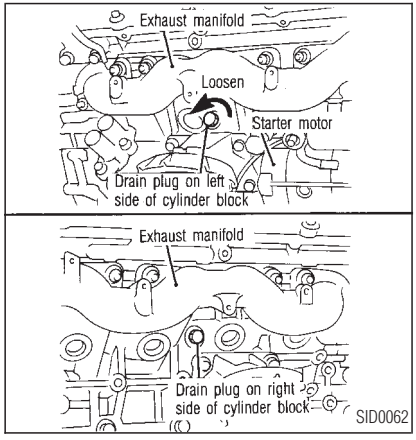

3. Open the drain plugs on both sides of the engine cylinder block.

Be careful not to allow coolant to contact drive belts.

4. Flush the cooling system by running fresh water through the radiator.
5. Close the radiator drain valve and cylinder block drain plugs securely.
6. See "Capacities and recommended fuel/lubricants" in the "10. Technical and consumer information" section for cooling system capacity. Fill the radiator slowly with the proper mixture of anti-freeze solution and demineralized water/distilled water. Fill the coolant reservoir tank up to the MAX level. Then install the radiator filler cap.
7. Start the engine and warm it up until it reaches normal operating temperature. Then race the engine two or three times under no load. Watch the engine coolant temperature gauge for signs of overheating.
8. Stop the engine. **After it completely cools down,** refill the radiator up to the radiator filler cap opening. Fill the reservoir tank up to the MAX level.
9. Check the drain valve and drain plugs for any sign of leakage.

ENGINE OIL

CHECKING ENGINE OIL LEVEL

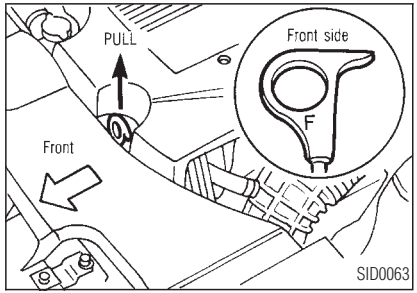

1. Park the vehicle on a level surface and apply parking brake.
2. Run the engine until it reaches operating temperature.
3. Turn off the engine. **Wait more than 15**

minutes for the oil to drain back into the oil pan.

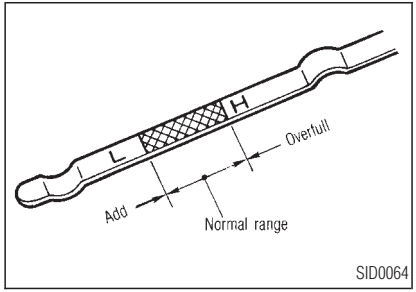

4. Remove the dipstick and wipe it clean. Reinsert it all the way.
5. Remove the dipstick again and check the oil level. It should be between the H and L marks. If the oil level is below the L mark, remove the oil filler cap and pour recommended oil through the opening. **Do not overfill.**
6. Recheck oil level with dipstick.

It is normal to add some oil between oil maintenance intervals or during the break-in period, depending on the severity of operating conditions.

CAUTION

Oil level should be checked regularly. Operating with insufficient amount of oil can damage the engine, and such damage is not covered by warranty.

CHANGING ENGINE OIL

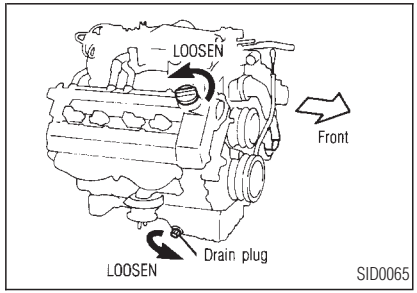

1. Park the vehicle on a level surface and apply the parking brake.
2. Run the engine until it reaches operating temperature.
3. Turn the engine off and wait more than 15 minutes.
4. Place a large drain pan under the drain plug.
5. Remove the oil filler cap.

6. Remove the drain plug with a wrench and completely drain the oil.

   If oil filter is to be changed, remove and replace it at this time. See later in "Engine oil" for changing engine oil filter.

CAUTION

Be careful not to burn yourself. The engine oil will be hot.

Waste oil must be disposed of properly. Check your local regulations.

7. Clean and re-install the drain plug and washer. Securely tighten the drain plug with a wrench.

   Drain plug tightening torque:
   22 to 29 ft-lb
   (29 to 39 N·m)

   Do not use excessive force.

8. Refill the engine with recommended oil and install the cap securely.

   See "Capacities and recommended fuel/lubricants" in the "10. Technical and consumer information" section for drain and refill capacity.

   The drain and refill capacity depends on the oil temperature and drain time. Use these specifications for reference only. Always use the dipstick to determine when the proper amount of oil is in the engine.

9. Start the engine.

   Check for leakage around the drain plug. Correct as required.

10. Turn the engine off and wait more than 15 minutes. Check the oil level. Add engine oil if necessary.

11. Dispose of waste oil in the proper manner.

WARNING

- ***Prolonged and repeated contact with used engine oil may cause skin cancer.***
- ***Try to avoid direct skin contact with used oil. If skin contact is made, wash thoroughly with soap or hand cleaner as soon as possible.***
- ***Keep used engine oil out of reach of children.***

CHANGING ENGINE OIL FILTER

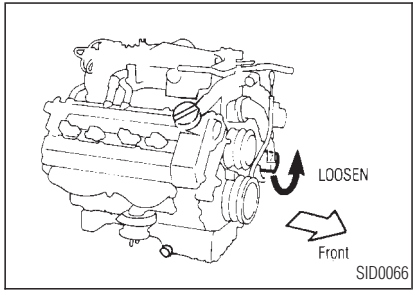

1. Park the vehicle on a level surface and apply the parking brake.
2. Turn the engine off.
3. Loosen the oil filter with an oil filter wrench. Remove the oil filter by turning it by hand.

CAUTION

Be careful not to burn yourself. The engine oil will be hot.

4. Wipe the engine oil filter mounting surface with a clean rag.

   Be sure to remove any old rubber gasket remaining on the mounting surface of the engine.
5. Coat the rubber gasket on the new filter with clean engine oil.
6. Screw in the oil filter until a slight resistance is felt, then tighten additionally more than 2/3 turn.
7. Start the engine and check for leakage around the oil filter. Correct as required.
8. Turn the engine off and wait more than 15 minutes. Check the oil level. Add engine oil if necessary.

AUTOMATIC TRANSMISSION FLUID

WARNING

- ***When the engine is running, keep hands, jewelry and clothing away from any moving parts such as cooling fan, and drive belt.***
- ***Automatic transmission fluid is poisonous and should be stored carefully in marked containers out of the reach of children.***

TEMPERATURE CONDITIONS FOR CHECKING

- The fluid level should be checked using the HOT range on the dipstick after the following conditions have been met:

  a) The engine should be warmed up to

operating temperature.

b) The vehicle should be driven at least 5 minutes.

c) The automatic transmission fluid should be warmed to between 122 and 176°F (50 and 80°C).

- The fluid can be checked at fluid temperatures of 86 to 122°F (30 to 50°C) using the COLD range on the dipstick after the engine is warmed up and before driving. However, the fluid should be re-checked using the HOT range.

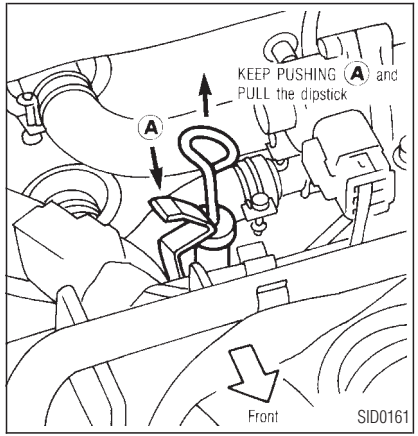

1. Park the vehicle on a level surface and set the parking brake.
2. Start the engine and then move the selector lever through each gear range. Move the selector lever to P (Park) after you have moved it through all ranges.

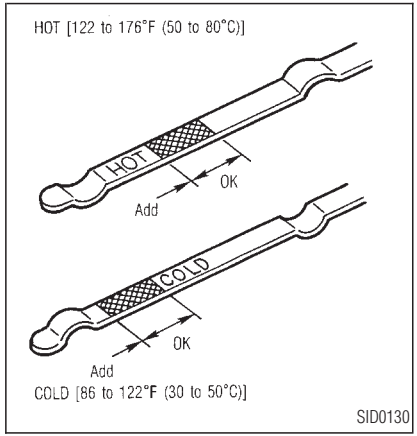

3. Check the fluid level with the engine idling.
4. Remove the dipstick and wipe it clean with lint-free paper.
5. Reinsert the dipstick into the charging pipe as far as it will go.
6. Remove the dipstick and note the reading.

If the level is at the low side of either range, add fluid to the charging pipe.

CAUTION

- ***Do Not Overfill.***
- ***Use only Nissan Matic D (Continental US and Alaska) or genuine automatic transmission fluid (Canada). Dexron™III/Mercon™ or equivalent may also be used. Outside the continental US and Alaska contact an INFINITI dealer for more information regarding suitable fluids, including recommended brand(s) of Dexron™ III/ Mercon™ automatic transmission fluid.***

NOTE:

If the vehicle has been driven for a long time at high speeds, or in city traffic in hot weather, or if it is being used to pull a trailer, an accurate fluid level cannot be read. You should wait until the fluid has cooled down (about 30 minutes).

POWER STEERING FLUID

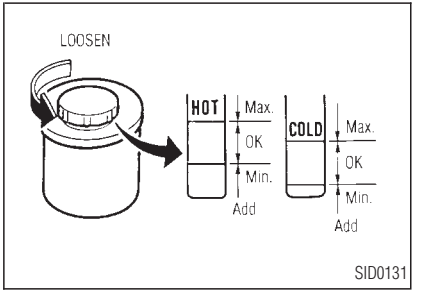

Check the fluid level in the reservoir tank.

The fluid level should be checked using the HOT range on the dipstick at fluid temperature of 122 to 176°F (50 to 80°C) or using the COLD range on the dipstick at fluid temperature of 32 to 86°F (0 to 30°C).

CAUTION

- ***Do not overfill.***
- ***Recommended fluid is type DEXRON™III or equivalent.***

BRAKE FLUID

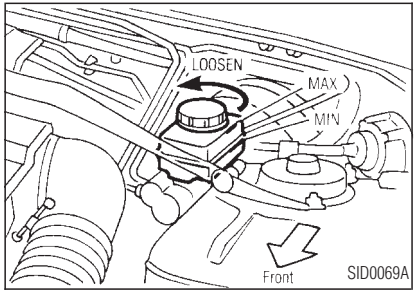

Check the fluid level in the reservoir. If the fluid is below the MIN line or the brake warning light comes on, add **DOT 3** fluid up to the MAX line. If fluid must be added frequently, the system should be checked by your INFINITI dealer.

WARNING

Use only new fluid. Old, inferior, or contaminated fluid may damage the brake system. The use of improper fluids can damage the brake system and affect the vehicle's stopping ability.

CAUTION

Do not spill the fluid on painted surfaces. This will damage the paint. If fluid is spilled, wash with water.

WINDOW WASHER FLUID

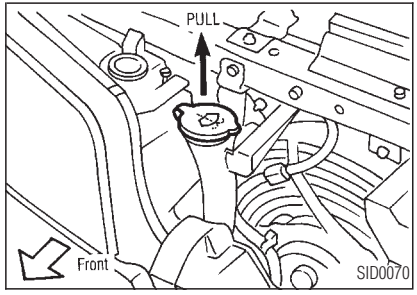

Add fluid when the low washer fluid warning light comes on. Add a washer solvent to the water for better cleaning. In the winter season, add a windshield washer anti-freeze. Follow the manufacturer's instructions for the mixture ratio.

CAUTION

Do not substitute engine anti-freeze coolant for window washer solution. This may result in damage to the paint.

BATTERY

- Keep the battery surface clean and dry. Any corrosion should be washed off with a solution of baking soda and water.
- Make certain the terminal connections are clean and securely tightened.
- If the vehicle is not to be used for 30 days or longer, disconnect the negative (—) battery terminal cable to prevent discharge.

WARNING

- ***Do not expose the battery to flames or electrical sparks. Hydrogen gas generated by battery action is explosive. Do not allow battery fluid to contact your skin, eyes, fabrics, or painted surfaces. After touching a battery or battery cap, do not touch or rub your eyes. Thoroughly wash your hands. If the acid contacts your eyes, skin or clothing, immediately flush with water for at least 15 minutes and seek medical attention.***
- ***When working on or near a battery, always wear suitable eye protection and remove all jewelry.***
- ***Keep the battery out of the reach of children.***

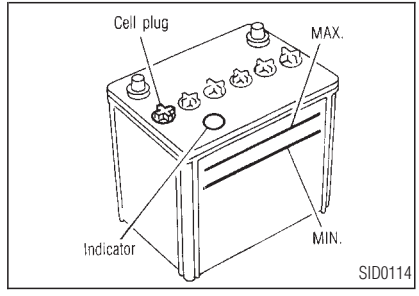

Check the fluid level in each cell (Remove the battery cover if it is necessary). It should be between the MAX. and MIN. lines.

If it is necessary to add fluid, add only distilled water to bring the level to the indicator in each filler opening. **Do not overfill.**

1. Remove the cell plugs.

2. Add distilled water up to the MAX. level.
3. Install the cell plugs.

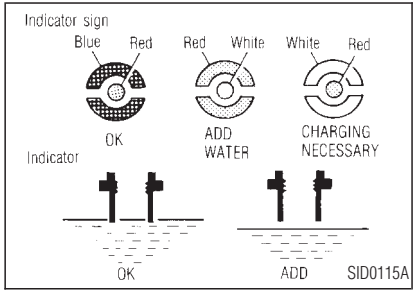

Check if the indicator in each filler opening indicates OK (outer circle is blue and center circle is red).

If it indicates ADD WATER (outer circle is red and center circle is white), add only distilled water in each filler opening. **Do not overfill.**

If it indicates CHARGING NECESSARY (outer circle is white and center circle is red), the battery needs to be charged.

WARNING

Do not overcharge and do not expose the battery to flames or electrical sparks when charging.

If jump starting is necessary, see “Jump starting” in the “6. In case of emergency” section. If the engine does not start by jump starting, the battery may have to be replaced. Contact your INFINITI dealer.

DRIVE BELTS

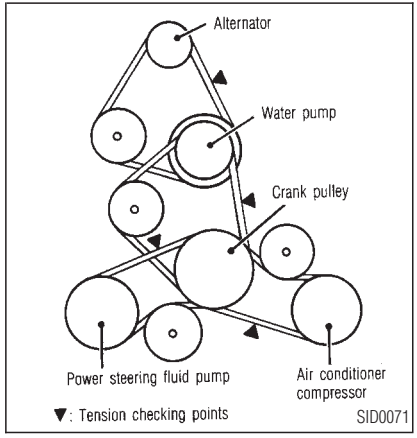

WARNING

Be sure the ignition key is OFF. The engine could rotate unexpectedly.

1. Visually inspect each belt for signs of unusual wear, cuts, fraying or looseness. If the belt is in poor condition or loose, have it replaced or adjusted by your INFINITI dealer.
2. Have the belts checked regularly for condition and tension in accordance with the maintenance schedule in this manual.

SPARK PLUGS

REPLACING SPARK PLUGS

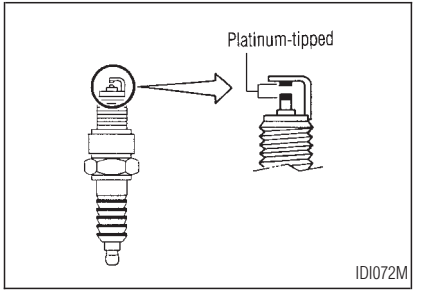

Platinum-tipped spark plugs

It is not necessary to replace the platinum-tipped spark plugs as frequently as the conventional type spark plugs since they will last much longer. Follow the maintenance schedule, but do not reuse them by cleaning or regapping.

If replacement is required, see your INFINITI dealer for servicing.

WARNING

Be sure the engine and ignition switch are off and that the parking brake is engaged securely.

CAUTION

Be sure to use the correct wrench to remove the plugs. An incorrect wrench can cause damage.

Always replace spark plugs with recommended or equivalent ones.

AIR CLEANER

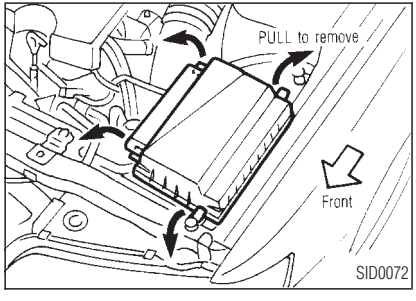

The filter element should not be cleaned and reused. Replace it according to the maintenance intervals. See “Periodic maintenance schedule” in the “9. Maintenance” section for maintenance intervals. When replacing the filter, wipe the inside of the air cleaner housing and the cover with a damp cloth.

WARNING

- ***Operating the engine with the air cleaner off can cause you or others to be burned. The air cleaner not only cleans the air, it stops flame if the engine backfires. If it isn’t there, and the engine backfires, you could be burned. Don’t drive with it off, and be careful working on the engine with the air cleaner off.***
- ***Never pour fuel into the throttle body or attempt to start the engine with the air cleaner removed. Doing so could result in serious injury.***

WINDSHIELD WIPER BLADES

CLEANING

If your windshield is not clear after using the windshield washer or if a wiper blade chatters when running, wax or other material may be on the blade or windshield.

Clean the outside of the windshield with a washer solution or a mild detergent. Your windshield is clean if beads do not form when rinsing with clear water.

Clean the blade by wiping it with a cloth soaked in a washer solution or a mild detergent. Then rinse the blade with clear water. If your windshield is still not clear after cleaning the blades and using the wiper, replace the blades.

REPLACING

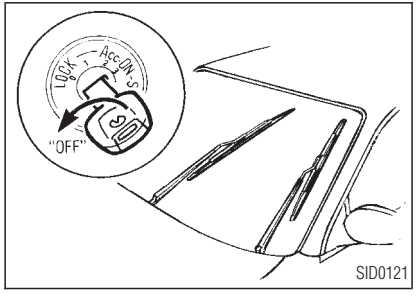

1. Turn the ignition switch to the ACC or ON position and the windshield wiper switch ON. Turn the ignition switch OFF when the wiper is in the fully up position. The wiper will stop as illustrated.

The wiper should be in the fully up position to avoid scratching the engine hood or wiper arm.

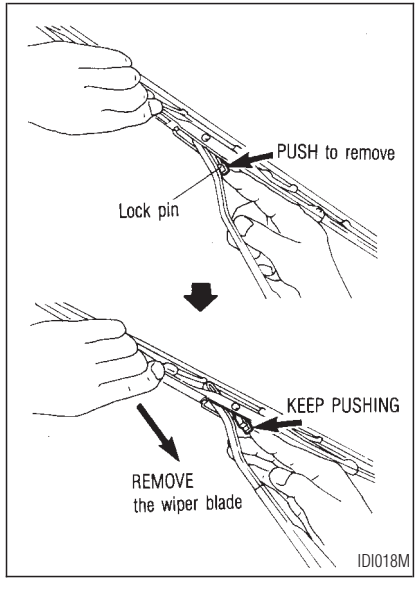

2. Pull the wiper arm.
3. Push the lock pin, then remove the wiper blade.
4. Insert the new wiper blade onto the wiper arm until a click sounds.

CAUTION

After wiper blade replacement, return the wiper arm to its original position.

Otherwise it may be damaged when the engine hood is opened.

Make sure the wiper blade contacts the glass, otherwise the arm may be damaged from wind pressure.

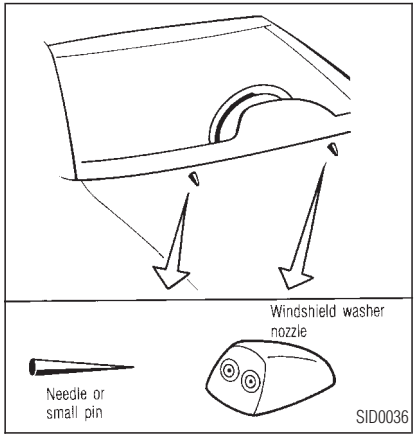

If you wax the surface of the hood, be careful not to let wax get into the washer nozzle. This may cause clogging or improper windshield washer operation. If wax gets into the nozzle, remove it with a needle or small pin.

PARKING BRAKE AND BRAKE PEDAL

CHECKING PARKING BRAKE

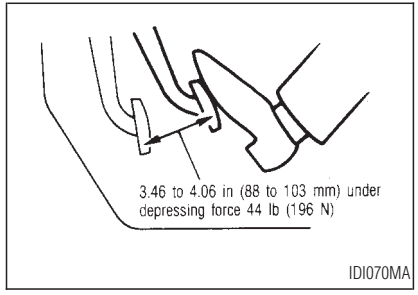

From the released position, depress the parking brake pedal slowly and firmly, and check the distance between the initial and final position of the pedal. If it is out of the range shown above, see your INFINITI dealer.

CHECKING BRAKE PEDAL

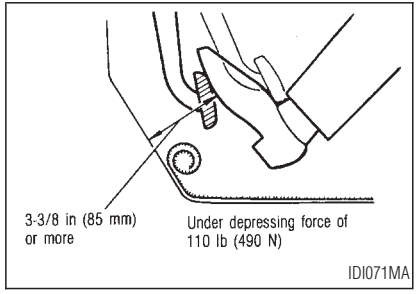

With the engine running, check the distance between the upper surface of the pedal and the metal floor. If it is out of the range shown above, see your INFINITI dealer.

Self-adjusting brakes

Your vehicle is equipped with self-adjusting brakes.

The disc-type brakes self-adjust every time the brake pedal is applied.

WARNING

See your INFINITI dealer for a brake system check if the brake pedal height does not return to normal.

Brake pad wear indicators

The disc brake pads on your vehicle have audible wear indicators. When a brake pad requires replacement, it will make a high pitched scraping or screeching sound when the vehicle is in motion whether or not the brake pedal is depressed. Have the brakes checked as soon as possible if the wear indicator sound is heard.

Under some driving or climate conditions, occasional brake squeak, squeal or other noise may be heard. Occasional brake noise during light to moderate stops is normal and does not affect the function or performance of the brake system.

The rear drum brakes (if so equipped) do not have audible wear indicators. Should you ever hear an unusually loud noise from the rear drum brakes, have them inspected as soon as possible by your INFINITI dealer.

Proper brake inspection intervals should be followed. For additional information, see “Periodic maintenance schedules” in the “9. Maintenance” section for maintenance intervals.

BRAKE BOOSTER

Check the brake booster function as follows:

1. With the engine off, press and release the brake pedal several times. When brake pedal movement (distance of travel) remains the same from one pedal application to the next, continue on to the next step.
2. While depressing the brake pedal, start the engine. The pedal height should drop a little.
3. With the brake pedal depressed, stop the engine. Keeping the pedal depressed for about 30 seconds, the pedal height should not change.
4. Run the engine for 1 minute without depressing the brake pedal, then turn it off. Depress the brake pedal several times. The pedal travel distance will decrease gradually with each depression as the vacuum is released from the booster.

If the brakes do not operate properly, see your INFINITI dealer.

FUSES

CAUTION

Never use a fuse of higher amperage rating than that specified on the fuse box cover. This could damage the electrical system or cause a fire.

ENGINE COMPARTMENT

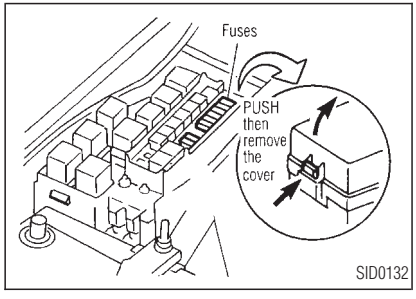

If any electrical equipment does not operate, check for an open fuse.

1. Be sure the ignition key and the headlight switch are OFF.
2. Open the engine hood.
3. Remove the fuse box cover.
4. Remove the fuse with the fuse puller.
5. If the fuse is open, replace it with a new fuse.
6. If a new fuse opens again, have the electrical system checked and repaired by your INFINITI dealer.

Fusible links

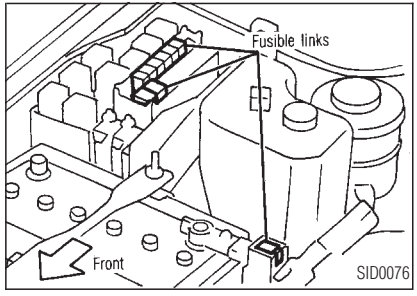

If any electrical equipment does not operate and fuses are in good condition, check the fusible links. If any of these fusible links are melted, replace only with genuine parts. See your INFINITI dealer.

PASSENGER COMPARTMENT

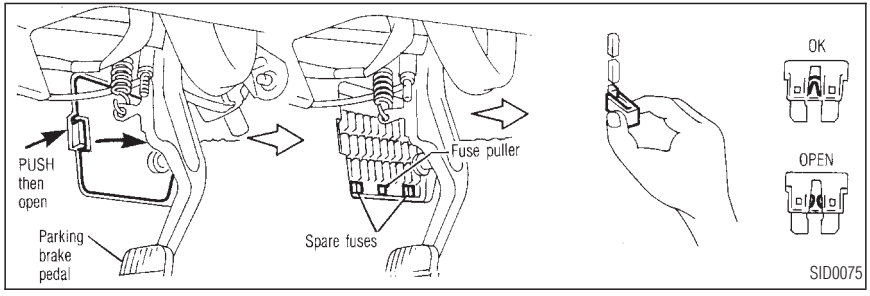

If any electrical equipment does not operate, check for an open fuse.

1. Be sure the ignition key and the headlight switch are OFF.
2. Open the fuse box cover.
3. Remove the fuse with the fuse puller.
4. If the fuse is open, replace it with a new fuse.
5. If a new fuse opens again, have the electrical system checked and repaired by your INFINITI dealer.

LIGHTS

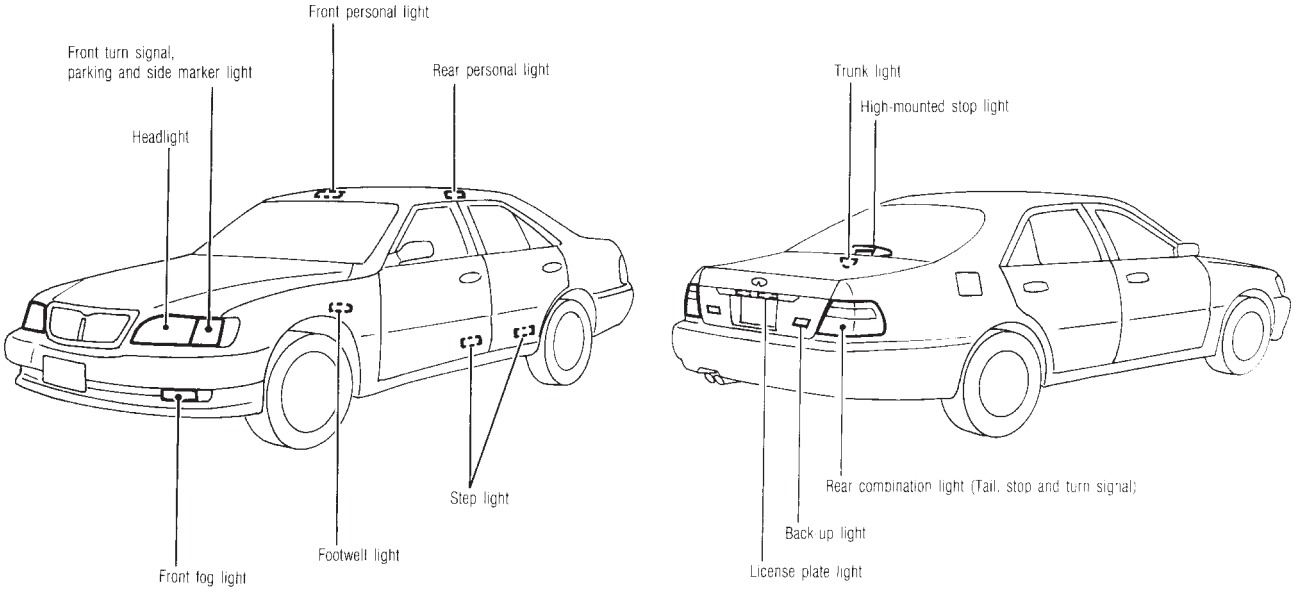

SID0162

HEADLIGHTS

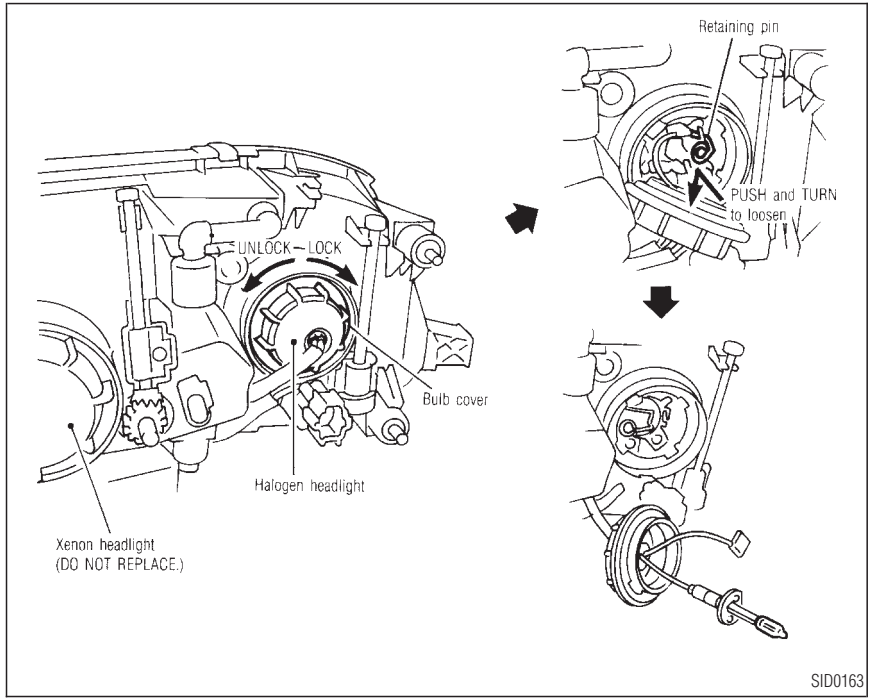
Retaining pin
PUSH and TURN
to loosen
UNLOCK
LOCK
Bulb cover
Halogen headlight
Xenon headlight
(DO NOT REPLACE.)
SID0163

Replacing the xenon headlight bulb

WARNING

HIGH VOLTAGE

When xenon headlights are on, they produce a high voltage. To prevent an electric shock, never attempt to modify or disassemble. Always have your xenon headlights replaced at an authorized INFINITI dealer. For additional information, see "Headlight and turn signal switch" in the "2. Instruments and controls" section.

Replacing the halogen headlight bulb

The headlight is a semi-sealed beam type which uses a replaceable headlight (halogen) bulb. A bulb can be replaced from inside the engine compartment without removing the headlight assembly.

CAUTION

- ***High pressure halogen gas is sealed inside the bulb. The bulb may break if the glass envelope is scratched or the bulb is dropped.***
- ***Hold the plastic base when handling the bulb. Never touch the glass envelope.***
- ***Use the same number and wattage as originally installed:***

  Wattage 55

  Bulb no. H1
- ***Do not leave the bulb out of the headlight reflector for a long period of time as dust, moisture, and smoke may enter the headlight body and affect the performance of the headlight.***

1. Open the engine hood.
2. Disconnect the battery negative cable.
3. Remove the air cleaner box for left side headlight bulb replacement or the battery for right side headlight bulb replacement.
4. Turn the bulb cover counterclockwise, then remove it.
5. Push and turn the retaining pin to loosen it.
6. Remove the headlight bulb. Do not shake or rotate the bulb when removing it.
7. Install the new bulb in the reverse order of removal.

Aiming is not necessary after replacing the bulb. When aiming adjustment is

necessary, contact your INFINITI dealer.

EXTERIOR AND INTERIOR LIGHTS

Item	Wattage (W)	Bulb No.
Front turn signal/parking/side marker light	27/8	1157NA
Front fog light	55	H3
Rear combination light		
turn signal	21	7440
stop/tail	21/5	7443
tail	5	168
Back-up light	18	—
License plate light	5	168
Front personal light	8	—
Rear personal light	8	—
Vanity mirror light	1.4	—
Step light	2.7	158
Footwell light	3.4	158
Trunk light	3.4	158
High-mounted stop light	18	—

Replacement procedures

All other lights are either type A, B, C, D, E or F. When replacing a bulb, first remove the lens and/or cover.

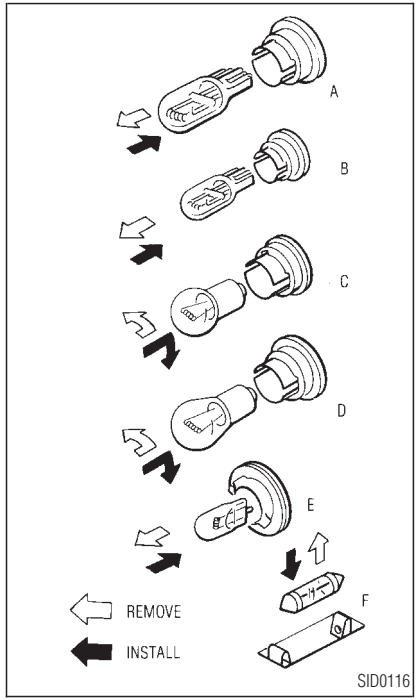

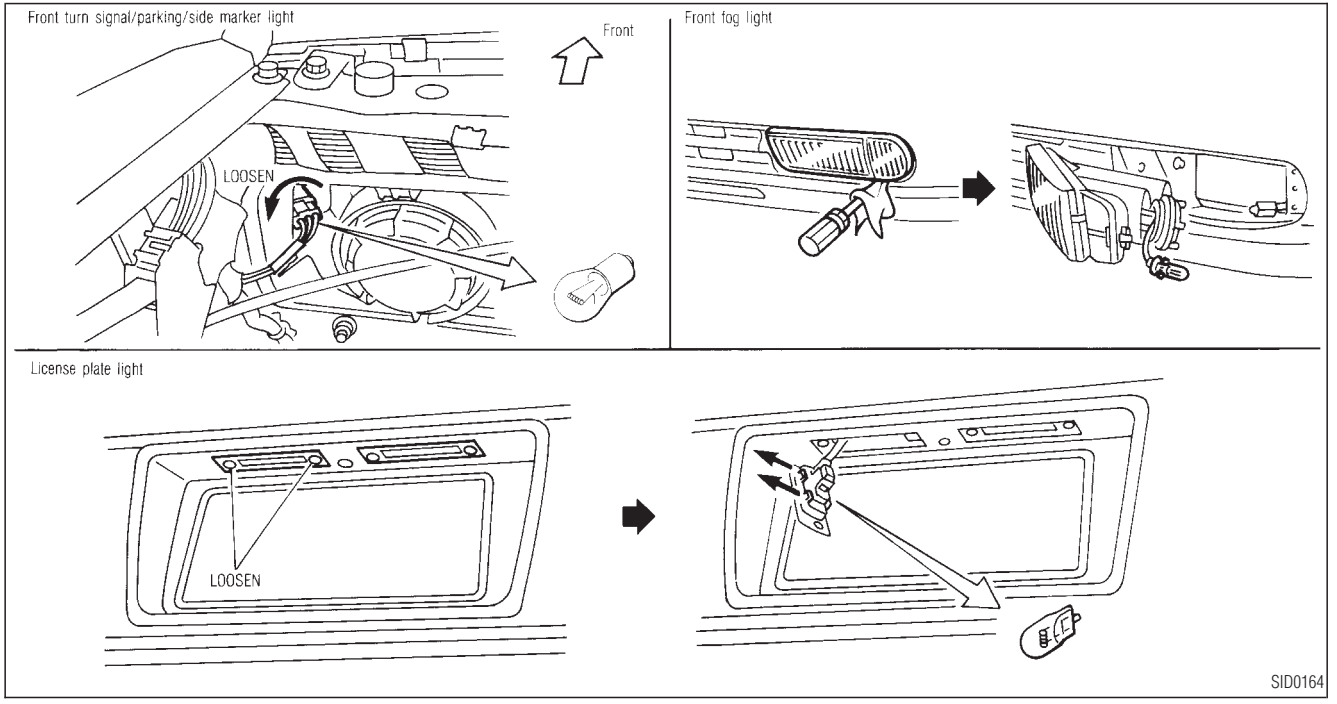
Front turn signal/parking/side marker light
Front
LOOSEN
Front fog light
License plate light
LOOSEN
SID0164

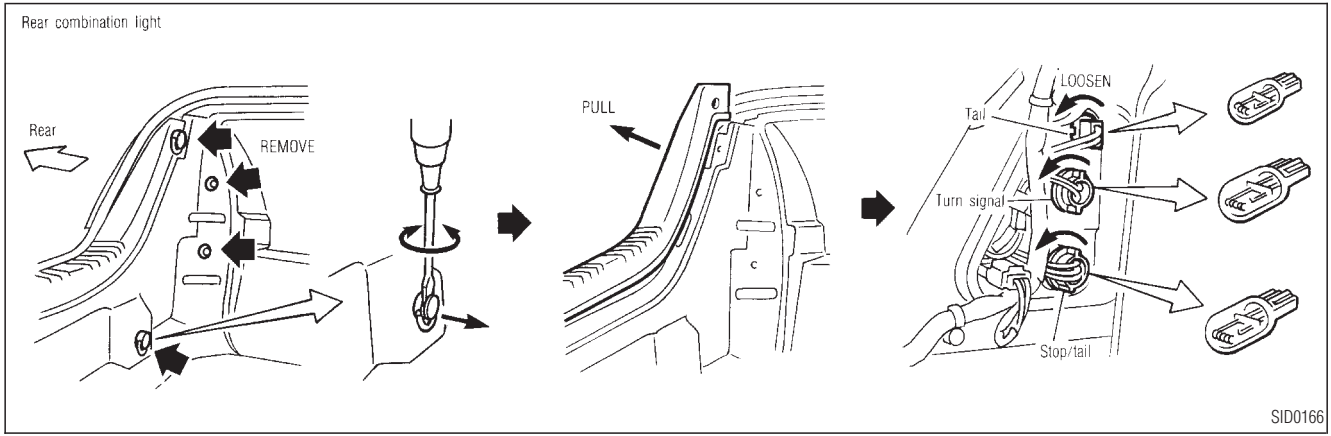
Rear combination light
Rear
REMOVE
PULL
LOOSEN
Tail
Turn signal
Stop/tail
SID0166

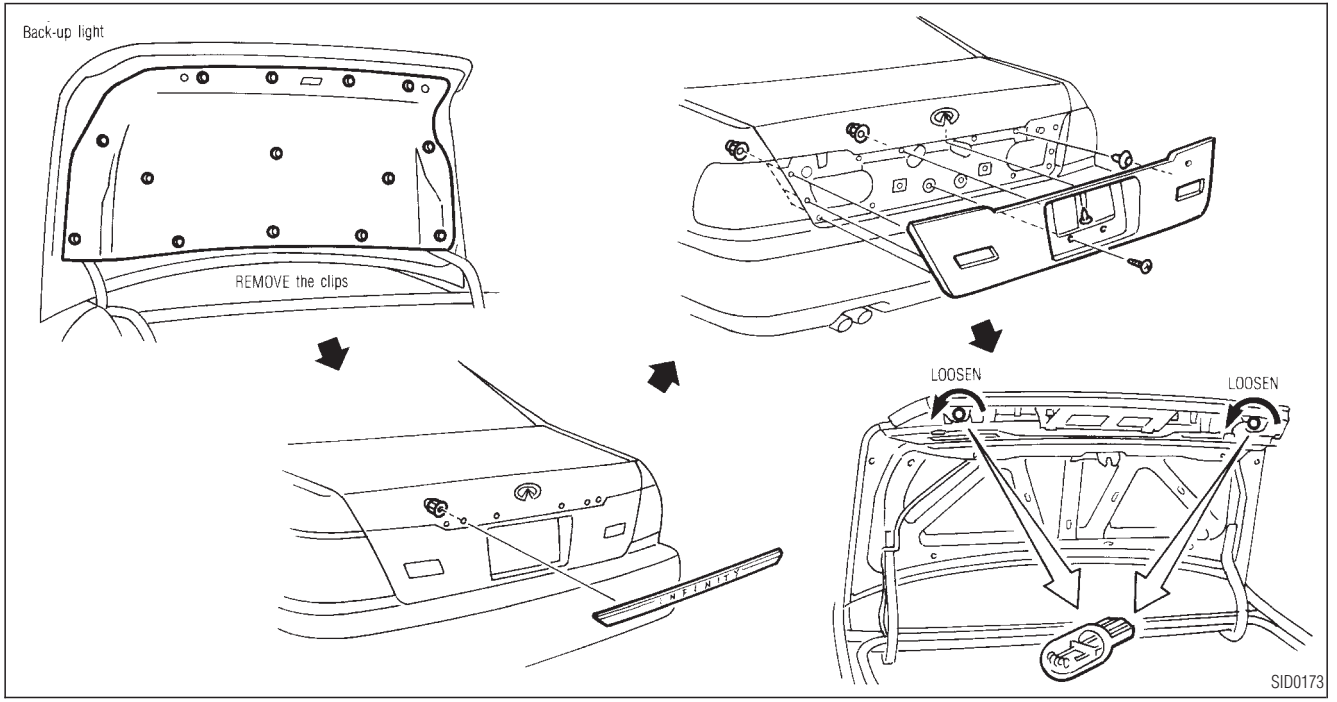
Back-up light
REMOVE the clips
LOOSEN
LOOSEN
INFINITI
SID0173

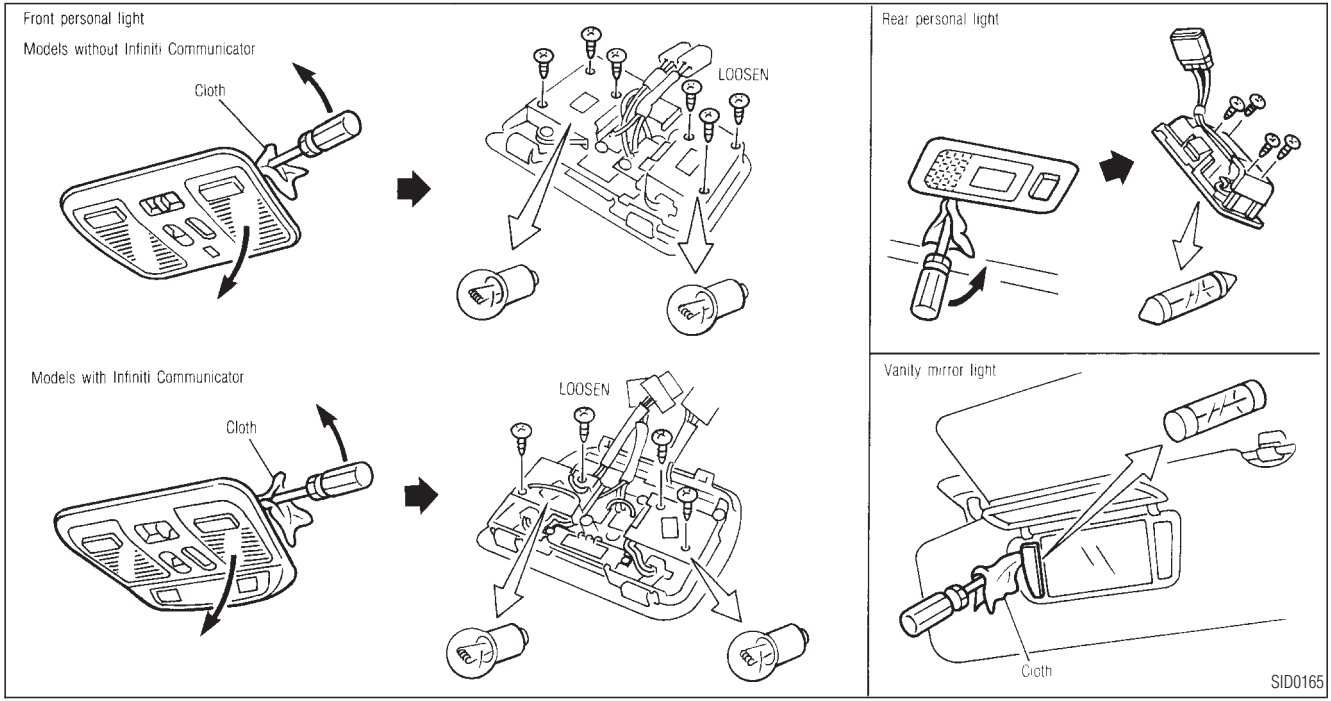
Front personal light
Models without Infiniti Communicator
Cloth
LOOSEN
Models with Infiniti Communicator
Cloth
LOOSEN
Rear personal light
Vanity mirror light
Cloth
SID0165

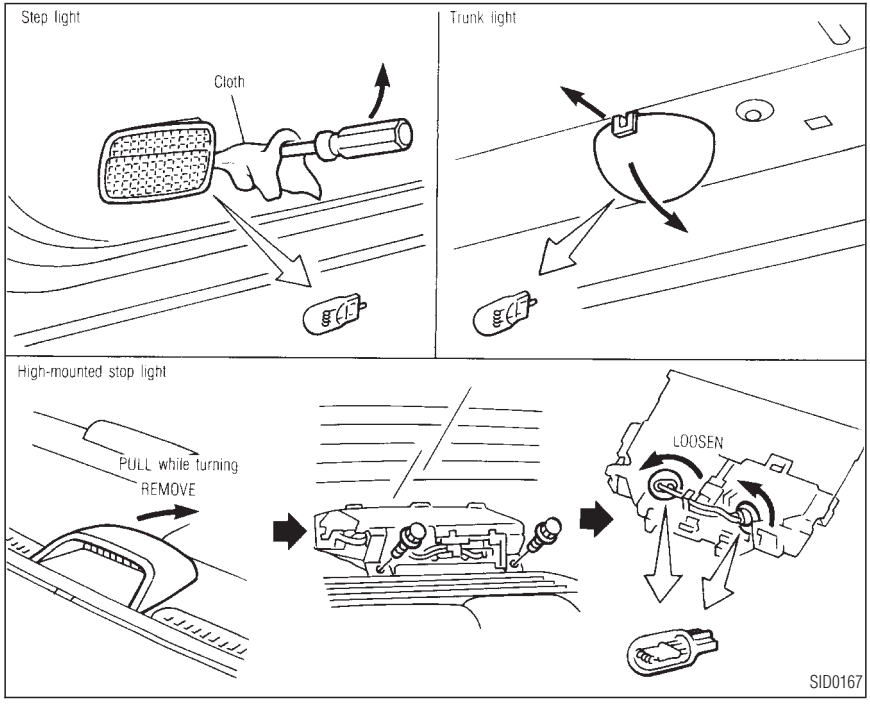
Step light
Cloth
Trunk light
High-mounted stop light
PULL while turning
REMOVE
LOOSEN
SID0167

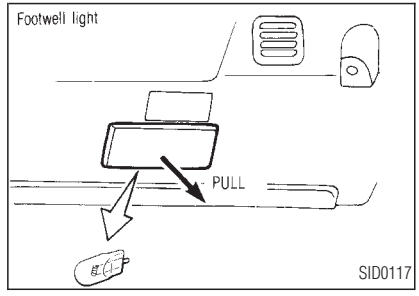
Footwell light
PULL
SID0117

TIRES AND WHEELS

If you have a flat tire, see "Flat tire" in the "6. In case of emergency" section.

TIRE PRESSURE

Maximum inflation pressure

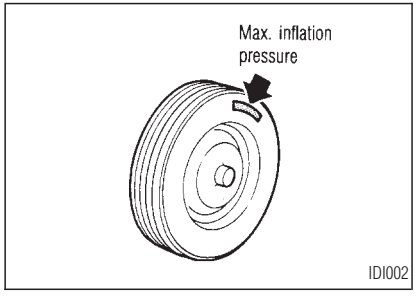

Do not exceed the maximum inflation pressures shown on the side wall of the tire.

Tire inflation pressure

Periodically check the tire pressure (including spare). Incorrect tire pressure may adversely affect tire life and vehicle handling. Tire pressure should be checked when the tires are COLD. Tires are considered COLD after the vehicle has been parked for 3 or more hours, or driven less than 1 mile (1.6 km). COLD tire pressures are shown on the tire placard located on the front face of the rear left wheel housing inside the vehicle.

WARNING

- ***Improperly inflated tires can fail suddenly and cause an accident.***
- ***The vehicle weight capacity is indicated on the tire placard. Do not load your vehicle beyond this capacity. Overloading your vehicle may result in reduced tire life, unsafe operating conditions due to premature tire failure, or unfavorable handling characteristics and could also lead to a serious accident. Loading beyond the specified capacity may also result in failure of other vehicle components.***
- ***Before taking a long trip, or whenever you have loaded your vehicle heavily, use a tire pressure gauge to ensure that the tire pressure is at the specified level.***
- ***Do not drive your vehicle over 85 MPH (140 km/h) unless it is equipped with high speed capability tires. Driving faster than 85 MPH (140 km/h) may result in tire failure, loss of control and possible injury.***

TYPES OF TIRES

CAUTION

When changing or replacing tires, be sure all four tires are of the same type (summer, all season or snow) and construction. Your INFINITI dealer may be able to help you with information about tire type, size, speed rating and availability. Replacement tires may have a lower speed rating than the factory equipped tires, and may not match the potential maximum vehicle speed. Never exceed the maximum speed rating of the tire.

All season tires

INFINITI specifies all season tires on some models to provide good performance for use all year around, including snowy and icy road conditions. All season tires are identified by ALL SEASON and/or M&S on the tire sidewall. Snow tires have better snow traction than All season tires and may be more appropriate in some areas.

Summer tires

Summer tire performance in snow and ice will be substantially reduced. Summer tires do not have the tire traction rating M&S on the tire sidewall.

If you operate your vehicle in snowy or icy conditions, INFINITI recommends the use of SNOW or ALL SEASON tires on all four wheels.

Snow tires

If snow tires are needed, it is necessary to select tires equivalent in size and load rating to the original equipment tires. If you do not, it can adversely affect the safety and handling of your vehicle.

Generally, snow tires will have lower speed ratings than factory equipped tires and may not match the potential maximum vehicle speed. Never exceed the maximum speed rating of the tire.

If you operate your vehicle in snowy or icy conditions, INFINITI recommends the use of SNOW or ALL SEASON tires on all four wheels.

For additional traction on icy roads, studded tires may be used. However, some provinces and states prohibit their use. Check local, state and provincial laws before installing studded tires. Skid and traction capabilities of studded snow tires, on wet or dry surfaces, may be poorer than that of non-studded snow tires.

TIRE CHAINS

Use of tire chains may be prohibited according to location. Check the local laws before installing tire chains. When installing tire

chains, make sure they are of proper size for the tires on your vehicle and are installed according to the chain manufacturer's suggestions. **Use only SAE Class S chains.** Other types may damage your vehicle. Use chain tensioners when recommended by the tire chain manufacturer to ensure a tight fit. Loose end links of the tire chain must be secured or removed to prevent the possibility of whipping action damage to the fenders or underbody. If possible, avoid fully loading your vehicle when using tire chains. In addition, drive at a reduced speed. Otherwise, your vehicle may be damaged and/or vehicle handling and performance may be adversely affected.

Never install tire chains on T-type spare tires. Do not use the chains on dry roads.

CHANGING TIRES AND WHEELS

Tire rotation

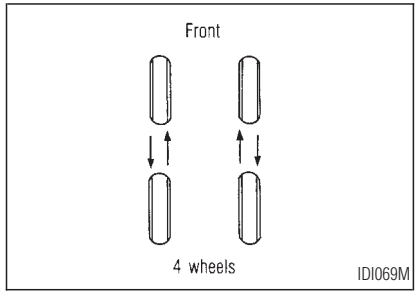

INFINITI recommends that tires be rotated every 7,500 miles (12,000 km).

Wheel nut tightening torque:
72 to 87 ft-lb
(98 to 118 N·m)

See "Flat tire" in the "6. In case of emergency" section for tire replacing procedures.

WARNING

- ***After rotating the tires, adjust the tire pressure.***
- ***Retighten the wheel nuts any time after the aluminum wheels have been run for the first 600 miles (1,000 km).***
- ***Do not include the T-type spare tire or any other small size spare tire in the tire rotation.***

Tire wear and damage

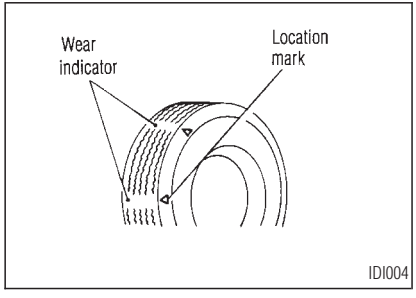

WARNING

- ***Tires should be inspected periodically for wear, cracking, bulging, or objects caught in the tread. If excessive wear, cracks, bulging, or deep cuts are found, the tire should be replaced.***
- ***The original tires have a built-in tread wear indicator. When the wear indicator is visible, the tire should be replaced.***
- ***Improper service for a T-type spare tire may result in serious personal injury. If it is necessary to repair the T-type spare tire, contact your INFINITI dealer.***

Replacing tires and wheels

When replacing a tire, use the same size and load carrying capacity as the original equipment tires. See “Specifications” in the “10. Technical and consumer information” section for recommended types and sizes of tires and wheels.

WARNING

- ***The use of tires other than those recommended or the mixed use of tires of different brands, construction (bias, bias-belted or radial), or tread patterns can adversely affect the ride, braking, handling, ground clearance, body-to-tire clearance, snow chain clearance, speedometer calibration, headlight aim and bumper height. Some of these effects may lead to accidents and could result in serious personal injury.***
- ***If the wheels are changed for any reason, always replace with wheels which have the same offset dimension. Wheels of a dif-***

ferent offset could cause early tire wear, possibly degraded vehicle handling characteristics and/or interference with the brake discs/drums. Such interference can lead to decreased braking efficiency and/or early brake pad/shoe wear. Refer to "Wheels and tires" in the "Technical and consumer information" section for wheel's offset dimensions.

- ***Do not install a deformed wheel or tire even if it has been repaired. Such wheels or tires could have structural damage and could fail without warning.***
- ***The use of retread tire is not recommended.***

Wheel balance

Unbalanced wheels may affect vehicle handling and tire life. Even with regular use, wheels can get out of balance. Therefore, they should be balanced as required.

Wheel balance service should be performed with the wheels off the vehicle. Spin balancing the driving wheels on the vehicle could lead to transmission damage.

Care of wheels

- Wash the wheels when washing the vehicle to maintain their appearance.
- Clean the inner side of the wheels when the wheel is changed or the underside of the vehicle is washed.
- Do not use abrasive cleaners when washing the wheels.
- Inspect wheel rims regularly for dents or corrosion. Such damage may cause loss of pressure or poor seal at the tire bead.
- INFINITI recommends that the road wheels be waxed to protect against road salt in areas where it is used during winter.

Spare tire (T-type spare tire)

Observe the following precautions if the T-type spare tire must be used, otherwise your vehicle could be damaged or involved in an accident.

CAUTION

- ***The T-type spare tire should be used only for emergency. It should be replaced by the standard tire at the first opportunity.***
- ***Drive carefully while the T-type spare tire is installed. Avoid sharp turns and abrupt braking while driving.***

- *Periodically check the T-type spare tire inflation pressure, and always keep it at 60 psi (420 kPa, 4.2 bar).*
- *Do not drive your vehicle at speeds faster than 50 MPH (80 km/h).*
- *Do not use tire chains on a T-type spare tire. Tire chains will not fit properly on the T-type spare tire and may cause damage to the vehicle.*
- *When driving on roads covered with snow or ice, the T-type spare tire should be used on the front and original tire used on the rear wheels (drive wheels). Use tire chains only on the rear two original tires.*
- *Tire tread of the T-type spare tire will wear at a faster rate than the original tire. Replace the T-type spare tire as soon as the tread wear indicators appear.*
- *Because the T-type spare tire is smaller than the original tire, ground clearance is reduced. To avoid damage to the vehicle do not drive over obstacles. Also do not drive the vehicle through an automatic car wash since it may get caught.*
- *Do not use the T-type spare tire on other vehicles.*
- *Do not use more than one T-type spare tire at the same time.*
- *Do not tow a trailer while the T-type spare tire is installed.*

9 MAINTENANCE

General maintenance 9-2
Explanation of maintenance items 9-3
Periodic maintenance schedules 9-5
Schedule 1 9-5
Schedule 2 9-6
Explanation of maintenance items 9-11

MAINTENANCE

Your new INFINITI has been designed to have minimum maintenance requirements with longer service intervals to save you both time and money. However, some day-to-day and regular maintenance is essential to maintain your INFINITI's good mechanical condition, as well as its emission and engine performance.

It is the owner's responsibility to make sure that the specified maintenance, as well as general maintenance, is performed.

As the vehicle owner, you are the only one who can ensure that your vehicle receives the proper maintenance care. You are a vital link in the maintenance chain.

General maintenance:

General maintenance includes those items which should be checked during normal day-to-day operation of the vehicle. They are essential if your vehicle is to continue to operate properly. It is your responsibility to perform these procedures regularly as prescribed.

These checks or inspections can be done by yourself, a qualified technician or, if you prefer, your INFINITI dealer.

Periodic maintenance:

The maintenance items listed in this part are required to be serviced at regular intervals.

However, under severe driving conditions, additional or more frequent maintenance will be required.

Where to go for service:

If maintenance service is required or your vehicle appears to malfunction, have the systems checked and serviced by an authorized INFINITI dealer.

INFINITI technicians are well-trained specialists and are kept up to date with the latest service information through technical bulletins, service tips, and in-dealership information systems. They are completely qualified to work on INFINITI vehicles **before** work begins.

You can be confident that your INFINITI dealer's service department performs the best job to meet the maintenance requirements on your vehicle — in a reliable and economic way.

GENERAL MAINTENANCE

During the normal day-to-day operation of the vehicle, general maintenance should be performed regularly as prescribed in this section. If you detect any unusual sounds, vibrations or smell, be sure to check for the cause or have your INFINITI dealer do it promptly. In addition, you should notify your INFINITI dealer if you think that repairs are required.

When performing any checks or maintenance work, see "Maintenance precautions" in the "8. Do-it-yourself" section.

EXPLANATION OF MAINTENANCE ITEMS

Additional information on the following items with "*" is found in the "8. Do-it-yourself" section.

Outside the vehicle

The maintenance items listed here should be performed from time to time, unless otherwise specified.

Tires*: Check the pressure with a gauge periodically when at a service station, including the spare, and adjust to the specified pressure if necessary. Check carefully for damage, cuts or excessive wear.

Wheel nuts*: When checking the tires, make sure no nuts are missing, and check for any loose nuts. Tighten if necessary.

Tire rotation*: Tires should be rotated every 7,500 miles (12,000 km).

Wheel alignment and balance: If the vehicle pulls to either side while driving on a straight and level road, or if you detect uneven or abnormal tire wear, there may be a need for wheel alignment.

If the steering wheel or seat vibrates at normal highway speeds, wheel balancing may be needed.

Windshield wiper blades*: Check for cracks or wear if they do not wipe properly.

Doors and engine hood: Check that all doors and the engine hood, operate properly. Also ensure that all latches lock securely. Lubricate hinges and latches if necessary. Make sure that the secondary latch keeps the hood from opening when the primary latch is released.

When driving in areas using road salt or other corrosive materials, check lubrication frequently.

Inside the vehicle

The maintenance items listed here should be checked on a regular basis, such as when performing periodic maintenance, cleaning the vehicle, etc.

Lights*: Make sure that the headlights, stop lights, tail lights, turn signal lights, and other lights are all operating properly and installed securely. Also check headlight aim.

Warning lights and chimes: Make sure that all warning lights and chimes are operating properly.

Windshield wiper and washer*: Check that the wipers and washer operate properly and that the wipers do not streak.

Windshield defroster: Check that the air comes out of the defroster outlets properly and in sufficient quantity when operating the heater or air conditioner.

Steering wheel: Check for changes in the

steering conditions, such as excessive free play, hard steering or strange noises.

Seats: Check seat position controls such as seat adjusters, seatback recliner, etc. to ensure they operate smoothly and that all latches lock securely in every position. Check that the head restraints move up and down smoothly and that the locks (if so equipped) hold securely in all latched positions.

Seat belts: Check that all parts of the seat belt system (For example, buckles, anchors, adjusters and retractors) operate properly and smoothly, and are installed securely. Check the belt webbing for cuts, fraying, wear or damage.

Accelerator pedal: Check the pedal for smooth operation and make sure the pedal does not catch or require uneven effort. Keep the floor mats away from the pedal.

Brakes: Check that the brakes do not pull the vehicle to one side when applied.

Brake pedal*: Check the pedal for smooth operation and make sure it has the proper distance under it when depressed fully. Check the brake booster function. Be sure to keep the floor mats away from the pedal.

Parking brake*: Check that the lever has the proper travel and confirm that your vehicle is held securely on a fairly steep hill with only the parking brake applied.

Automatic transmission P (Park) mechanism: On a fairly steep hill check that your vehicle is held securely with the selector lever in the P (Park) position without applying any brakes.

Under the hood and vehicle

The maintenance items listed here should be checked periodically (For example, each time you check the engine oil or refuel).

Windshield washer fluid*: Check that there is adequate fluid in the tank.

Engine coolant level*: Check the coolant level when the engine is cold.

Radiator and hoses: Check the front of the radiator and clean off any dirt, insects, leaves, etc., that may have accumulated. Make sure the hoses have no cracks, deformation, deterioration or loose connections.

Brake fluid level*: Make sure that the brake fluid level is between the MAX and MIN lines on the reservoir.

Battery*: Check the fluid level in each cell. It should be between the MAX and MIN lines.

Engine drive belts*: Make sure that no belt is frayed, worn, cracked or oily.

Engine oil level*: Check the level after parking the vehicle on a level spot and turning off the engine. (Wait a few minutes for the oil to drain back into the oil pan.)

Power steering fluid level* and lines: Check the level when the fluid is cold and the

engine is turned off. Check the lines for proper attachment, leaks, cracks, etc.

Automatic transmission fluid level*: Check the level after putting the selector lever in P (Park) with the engine idling.

Exhaust system: Make sure there are no loose supports, cracks or holes. If the sound of the exhaust seems unusual or there is a smell of exhaust fumes, immediately locate the trouble and correct it. See "Precautions when starting and driving" in the "5. Starting and driving" section for exhaust gas (Carbon monoxide).

Underbody: The underbody is frequently exposed to corrosive substances such as those used on icy roads or to control dust. It is very important to remove these substances, otherwise rust will form on the floor pan, frame, fuel lines and around the exhaust system. At the end of winter, the underbody should be thoroughly flushed with plain water, being careful to clean those areas where mud and dirt may accumulate. For additional information, see "Cleaning exterior" in the "7. Appearance and care" section.

Fluid leaks: Check under the vehicle for fuel, oil, water or other fluid leaks after the vehicle has been parked for a while. Water dripping from the air conditioner after use is normal. If you should notice any leaks or if gasoline fumes are evident, check for the cause and have it corrected immediately.

PERIODIC MAINTENANCE SCHEDULES

To ensure smooth, trouble-free, safe and economical driving, INFINITI provides two different maintenance schedules that may be used, depending upon the conditions in which you usually drive. These schedules contain both distance and time intervals, up to 60,000 miles (96,000 km)/48 months. For most people, the odometer reading will indicate when service is needed. However, if you drive very little, your vehicle should be serviced at the regular time intervals shown in the schedule. **After 60,000 miles (96,000 km) or 48 months, continue periodic maintenance at the same mileage/time intervals.**

SCHEDULE 1

Follow Periodic Maintenance Schedule 1 if your driving habits frequently include one or more of the following driving conditions:

- **repeated short trips of less than 5 miles (8 km).**
- **repeated short trips of less than 10 miles (16 km) with outside temperatures remaining below freezing.**
- **operating in hot weather in stop-and-go rush hour traffic.**
- **extensive idling and/or low speed driving for long distances, such as**

police, taxi or door-to-door delivery use.

- **driving in dusty conditions.**
- **driving on rough, muddy, or salt spread roads.**
- **towing a trailer, using a camper or a car-top carrier.**

SCHEDULE 2

Follow Periodic Maintenance Schedule 2 if none of the driving conditions shown in Schedule 1 apply to your driving habits.

Schedule 1

Abbreviations: R = Replace I = Inspect. Correct or replace if necessary. [ ]: Perform service at the mileage intervals only

MAINTENANCE OPERATION		MAINTENANCE INTERVAL															
Perform at number of miles, kilometers or months, whichever comes first.	Miles x 1,000	3.75	7.5	11.25	15	18.75	22.5	26.25	30	33.75	37.5	41.25	45	48.75	52.5	56.25	60
	(km x 1,000)	(6)	(12)	(18)	(24)	(30)	(36)	(42)	(48)	(54)	(60)	(66)	(72)	(78)	(84)	(90)	(96)
	Months	3	6	9	12	15	18	21	24	27	30	33	36	39	42	45	48
EMISSION CONTROL SYSTEM MAINTENANCE																	
Engine oil		R	R	R	R	R	R	R	R	R	R	R	R	R	R	R	R
Engine oil filter (Use Part No. 15208-31U00 or equivalent)		R	R	R	R	R	R	R	R	R	R	R	R	R	R	R	R
Air cleaner filter	See NOTE (1)								[R]								[R]
EVAP Vapor lines									I*								I*
Fuel lines									I*								I*
Drive belts	See NOTE (2)																I*
Engine coolant	See NOTE (3)																R*
Spark plugs (PLATINUM-TIPPED type)																	[R]
Fuel filter	See NOTE (4)*																

NOTE:
(1) If operating mainly in dusty conditions, more frequent maintenance may be required.
(2) After 60,000 miles (96,000 km) or 48 months, inspect every 15,000 miles (24,000 km) or 12 months.
(3) After 60,000 miles (96,000 km) or 48 months, replace every 30,000 miles (48,000 km) or 24 months.
(4) If vehicle is operated under extremely adverse weather conditions or in areas where ambient temperatures are either extremely low or extremely high, the filters might become clogged. In such an event, replace them immediately.
*** Maintenance items and intervals with "*" are recommended by INFINITI for reliable vehicle operation. The owner need not perform such maintenance in order to maintain the emission warranty or manufacturer recall liability. Other maintenance items and intervals are required.**

Schedule 1

Abbreviations: R = Replace I = Inspect. Correct or replace if necessary.

MAINTENANCE OPERATION		MAINTENANCE INTERVAL															
Perform at number of miles, kilometers or months, whichever comes first.	Miles x 1,000	3.75	7.5	11.25	15	18.75	22.5	26.25	30	33.75	37.5	41.25	45	48.75	52.5	56.25	60
	(km x 1,000)	(6)	(12)	(18)	(24)	(30)	(36)	(42)	(48)	(54)	(60)	(66)	(72)	(78)	(84)	(90)	(96)
	Months	3	6	9	12	15	18	21	24	27	30	33	36	39	42	45	48
CHASSIS AND BODY MAINTENANCE																	
Brake pads & rotors			I		I		I		I		I		I		I		I
Steering gear & linkage, axle & suspension parts			I		I		I		I		I		I		I		I
Exhaust system			I		I		I		I		I		I		I		I
Ventilation air filter			I		R		I		R		I		R		I		R
Brake lines & cables					I				I				I				I
Automatic transmission fluid & differential gear oil	See NOTE (1)				I				I				I				I
Supplemental air bag and supplemental side air bag systems	See NOTE (2)																

NOTE: (1) If towing a trailer, using a camper or a car-top carrier, or driving on rough or muddy roads, change (not just inspect) oil at every 30,000 miles (48,000 km) or 24 months.

(2) Inspect the supplemental air bag and supplemental side air bag systems 10 years after the date of manufacture noted on the F.M.V.S.S. certification label.

Schedule 2

Abbreviations: R = Replace I = Inspect. Correct or replace if necessary. [ ]: Perform service at the mileage intervals only

MAINTENANCE OPERATION		MAINTENANCE INTERVAL							
Perform at number of miles, kilometers or months, whichever comes first.	Miles x 1,000	7.5	15	22.5	30	37.5	45	52.5	60
	(km x 1,000)	(12)	(24)	(36)	(48)	(60)	(72)	(84)	(96)
	Months	6	12	18	24	30	36	42	48
EMISSION CONTROL SYSTEM MAINTENANCE									
Engine oil		R	R	R	R	R	R	R	R
Engine oil filter (Use Part No. 15208-31U00 or equivalent)		R	R	R	R	R	R	R	R
Air cleaner filter					[R]				[R]
EVAP Vapor lines					I*				I*
Fuel lines					I*				I*
Drive belts	See NOTE (1)								I*
Engine coolant	See NOTE (2)								R*
Spark plugs (PLATINUM-TIPPED Type)									[R]
Fuel filter	See NOTE (3)*								

NOTE:
(1) After 60,000 miles (96,000 km) or 48 months, inspect every 15,000 miles (24,000 km) or 12 months.
(2) After 60,000 miles (96,000 km) or 48 months, replace every 30,000 miles (48,000 km) or 24 months.
(3) If vehicle is operated under extremely adverse weather conditions or in areas where ambient temperatures are either extremely low or extremely high, the filters might become clogged. In such an event, replace them immediately.
*** Maintenance items and intervals with "*" are recommended by INFINITI for reliable vehicle operation. The owner need not perform such maintenance in order to maintain the emission warranty or manufacturer recall liability. Other maintenance items and intervals are required.**

Schedule 2

Abbreviations: R = Replace I = Inspect. Correct or replace if necessary.

MAINTENANCE OPERATION		MAINTENANCE INTERVAL							
Perform at number of miles, kilometers or months, whichever comes first.	Miles x 1,000	7.5	15	22.5	30	37.5	45	52.5	60
	(km x 1,000)	(12)	(24)	(36)	(48)	(60)	(72)	(84)	(96)
	Months	6	12	18	24	30	36	42	48
CHASSIS AND BODY MAINTENANCE									
Brake lines & cables			I		I		I		I
Brake pads & rotors			I		I		I		I
Automatic transmission fluid & differential gear oil			I		I		I		I
Ventilation air filter			R		R		R		R
Steering gear & linkage, axle & suspension parts					I				I
Exhaust system					I				I
Supplemental air bag and supplemental side air bag systems	See NOTE (1)								

NOTE: (1) Inspect the supplemental air bag and supplemental side air bag systems 10 years after the date of manufacture noted on the F.M.V.S.S. certification label.

EXPLANATION OF MAINTENANCE ITEMS

Additional information on the following items with "*" is found in the "8. Do-it-yourself" section.

Emission control system maintenance

Drive belts*: Check drive belts for wear, fraying or cracking and also for proper tension. Replace the drive belts if found damaged.

Air cleaner filter: Under normal driving conditions, the air cleaner filter should be replaced in accordance with the maintenance schedule. However, driving the vehicle in dusty areas may cause more rapid clogging of the element. Consequently, the element may have to be replaced more frequently.

Vapor lines: Check vapor lines and connections for failure or looseness. If leaks are found, replace them.

Fuel lines: Check the fuel hoses, piping and connections for leaks, looseness or deterioration. Replace any parts if they are damaged.

Fuel filter: If the vehicle is operated under extremely adverse weather conditions or in areas where ambient temperatures are either extremely low or extremely high, the filter might become clogged. In such an event, replace the filter immediately.

Engine coolant*: Drain and flush the cooling system.

Engine oil & oil filter*: Under normal driving conditions, the engine oil and oil filter should be replaced in accordance with the maintenance schedule. However, under severe driving conditions, they may have to be replaced more frequently.

Spark plugs*: Replace with new plugs having the correct heat range.

Chassis and body maintenance

Brake lines & cables: Check the brake lines and hoses (including brake booster vacuum hoses, connections & check valve) and parking brake cables for proper attachment, leaks, cracks, chafing, abrasion, deterioration, etc.

Brake pads & rotors: Check these and the other neighboring brake components for wear, deterioration and leaks. Under severe driving conditions, they may have to be inspected more frequently.

Automatic transmission fluid & differential gear oil*: Check the fluid level and visually inspect for signs of leakage.

Under severe driving conditions, the fluid or oil should be replaced at the specified interval.

Steering gear & linkage, axle & suspension parts: Check for damage, looseness and leakage of oil or grease. Under severe driving

conditions, more frequent inspection should be performed.

Exhaust system: Visually check the exhaust pipes, muffler, and hangers for proper attachment, leaks, cracks, chafing, abrasion, deterioration, etc. Under severe driving conditions, inspection should be performed more frequently.

Ventilation air filter: Under normal conditions, the ventilation air filter should be replaced in accordance with the maintenance schedule. However, in some situations, the air filter may clog more rapidly (depending on the air conditioner's working environment). If this happens, the air flow may decrease, or the windows may fog up easily when the air conditioner is in use, the air filter should be replaced immediately at your INFINITI dealer.

Supplemental air bag and supplemental side air bag systems: Maintenance for the supplemental air bags or supplemental side air bags should be done by an authorized INFINITI dealer.

10 TECHNICAL AND CONSUMER INFORMATION

Major systems and how they work..... 10-2
Infiniti VH41DE engine with electronic concentrated engine control system..... 10-2
On board diagnostic system 10-6
Electronically controlled 4-speed automatic transmission..... 10-7
Active damper suspension (if so equipped)..... 10-9
Anti-lock brake/traction control system 10-11
Automatic air conditioner..... 10-13
Supplemental restraint system..... 10-14
Paint 10-17
Hard clear coat (New cross linking clear coat) 10-17
Capacities and recommended fuel/lubricants..... 10-18
Fuel recommendation..... 10-19
Engine oil and oil filter recommendation..... 10-21
Recommended SAE viscosity number 10-23
Air conditioning system refrigerant and lubricant recommendations..... 10-24
Specifications 10-25
Engine..... 10-25
Tires and wheels 10-26
Dimensions and weights 10-27
When traveling or registering your vehicle in another country 10-27
Vehicle identification..... 10-28
Vehicle identification number (VIN) plate..... 10-28
Vehicle identification number (Chassis number)..... 10-28
Engine serial number 10-29
F.M.V.S.S. certification label 10-29
Emission control information label 10-29

Tire placard..... 10-30
Air conditioner specification label..... 10-30
Installing front license plate..... 10-31
Vehicle loading information..... 10-32
Terms 10-32
Determining vehicle load capacity..... 10-33
Loading tips..... 10-33
Towing a trailer 10-34
Maximum load limits..... 10-34
Towing safety 10-35
Uniform tire quality grading..... 10-38
Emission control system warranty..... 10-39
Reporting safety defects (US only)..... 10-39
Readiness for inspection/maintenance (I/M) test (US only)..... 10-40

MAJOR SYSTEMS AND HOW THEY WORK

The common theme that applies to almost all of the automotive systems described in this section is electronic controls. Because of their speed, precision and reliability, electronic components are used wherever possible to increase the efficiency and driveability of your INFINITI.

The typical control system employs sensors, which collect information about operating conditions and driver demand and send it, usually in the form of an electrical voltage signal, to an engine control module, which is a small, on board computer. The engine control module monitors the information provided by the sensors, calculates the optimum or best control, and makes it happen through signals to electrical actuators in the engine or transmission or brake system—wherever the control must take place. The results can seem miraculous.

INFINITI VH41DE ENGINE WITH ELECTRONIC CONCENTRATED ENGINE CONTROL SYSTEM

SUMMARY

The magic of the engine control system is that it coordinates the functions and control of air-fuel mixture, ignition timing, exhaust gas recirculation, and idle speed by the operation of a high-speed computer. The precisely coordinated control of all of these functions allows the engine to operate more efficiently and emission free than would have been possible under earlier technologies.

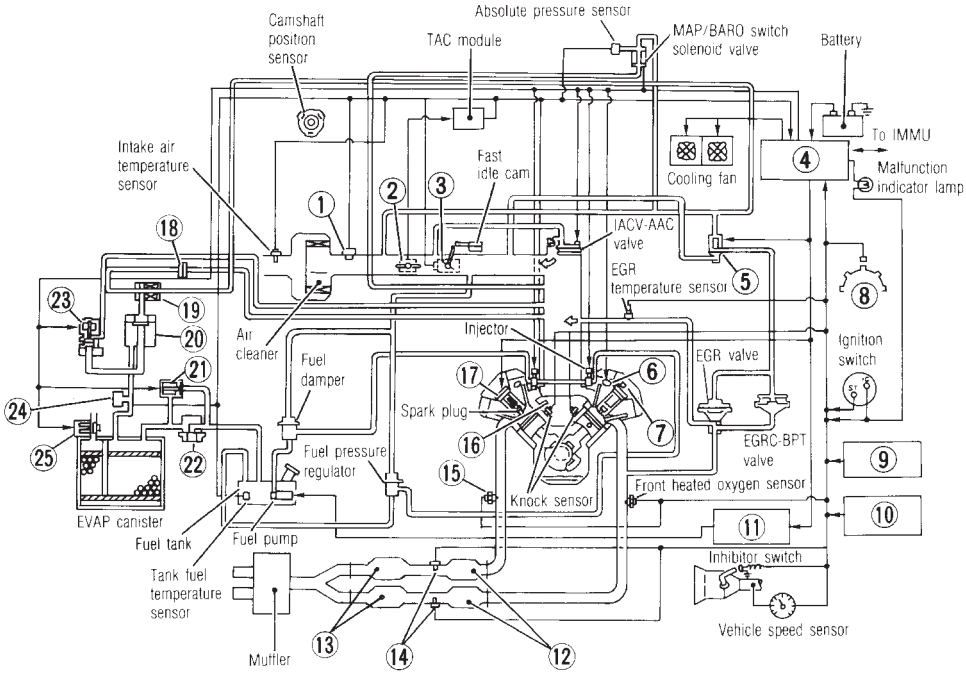

1. Mass air flow sensor (Hot film type)
2. Secondary throttle position sensor
3. Throttle position sensor and throttle position switch
4. ECM
5. EGRC-solenoid valve
6. Intake valve timing control solenoid valve
7. Intake valve timing control position sensor
8. Crankshaft position sensor (OBD)
9. Air conditioner switch
10. Power steering oil pressure switch
11. Fuel pump control module
12. Warm-up three way catalyst
13. Three way catalyst
14. Rear heated oxygen sensors
15. Front heated oxygen sensor
16. Engine coolant temperature sensor
17. Ignition coil (with power transistor)
18. One-way valve
19. EVAP canister purge control solenoid valve
20. EVAP canister purge control valve
21. Vacuum cut valve bypass valve
22. Vacuum cut valve
23. EVAP canister purge volume control valve
24. EVAP control system pressure sensor
25. EVAP canister vent control valve

SIT0087

To get the most from an engine—in the way of performance, smooth driveability, economy and control of harmful emissions—a number of decisive factors must be controlled as precisely as possible under all driving conditions. These factors include the following:

- the timing and overlap of the intake and exhaust valves in relation to the position of the pistons in the engine.
- the mixture of air and fuel that enters the engine cylinders during each intake stroke of the pistons.
- the timing of the spark that ignites the pressurized charge of air and fuel near the end of the compression stroke of the pistons.
- the temperature of the combustion that occurs in the cylinders, especially under load.
- engine idle speed under all conditions.

The engine in your INFINITI has degrees of precision in the automatic control of these factors that, only a few years ago, were not thought possible by any known technology. Such a high performance engine must operate smoothly and efficiently at all speeds. And it must do so with a minimum of fuel consumption and a minimum of emissions into the environment.

Mixture control

A gasoline engine requires a relatively rich mixture of fuel to air during idle, a lean mixture for mid-range and cruise conditions, and a richer mixture for high load, high RPM operation. The changes in amount of fuel delivered to the engine must occur smoothly, sometimes in response to sudden changes in demand from the driver. The INFINITI engine control system can give the engine precisely the amount of fuel required for each condition, according to a precise measurement of the amount of air that is allowed into the engine either through automatic devices provided for idle control or in response to your foot pressure on the vehicle throttle.

All of the atmospheric air that is drawn into the engine is measured by a mass air flow sensor.

This type of mass air flow sensor can respond very quickly to changes in intake air quantity and density, which means as you step on the throttle of your INFINITI to move into freeway traffic, a voltage signal is sent to the ECM (Engine Control Module) instantly, and the ECM responds just as quickly to provide more fuel by allowing the port fuel injectors to stay open precise milliseconds longer. The result is smooth acceleration, without stumble or hesitation.

Sequential multiport fuel injection system

Your INFINITI engine uses a separate fuel injector for each cylinder. These are placed into the intake ports, so that they can spray atomized fuel under pressure into the intake air stream. These injectors are controlled sequentially, which means that they operate in each cylinder according to the firing order. Each injector opens to spray its carefully metered amount of fuel just before the intake valve of the cylinder opens.

Constant pressure:

Fuel injector operation depends upon a supply of fuel that is always maintained at a constant pressure in relation to the pressure in the engine intake manifold. Under pressure, the fuel travels through the line, through a large and efficient fuel filter mounted under the hood, and into a fuel rail which feeds the injectors. Fuel flows into the bases of the injectors, where it is available to flow out of the injector nozzles and into the intake ports when the injectors are opened electrically by signals from the ECM.

By allowing more or less fuel to return to the tank, the fuel pressure regulator maintains the pressure at the injectors at the specified value above manifold pressure.

That allows the ECM to adjust the flow of fuel into the engine simply by controlling the amount of time the injectors stay open. The longer the injectors are held open, in milliseconds, the more fuel flow.

Ignition timing control

For best efficiency, ignition timing must be dynamic, that is it must change depending upon the engine operating conditions. It must respond to engine load, RPM changes, engine temperature changes, altitude, and so on. For precisely correct, automatic, adjustments in ignition timing to take place, the ECM must have sensors that tell about such conditions. The most important of these is the camshaft position sensor. The camshaft position sensor tells the ECM the engine speed and the positions of the pistons under all conditions.

Control of combustion temperature

Oxides of nitrogen, in a number of chemical variations, are among the major components of photochemical air pollution. These nitrogen oxide compounds are formed in the engine when the combustion temperatures are higher than about 2,000°F (1,093°C). One way to decrease nitrogen oxide formation in the engine, then, is to cool the temperature of combustion slightly. This is done by allowing a small amount of burned, and therefore inert, exhaust gases to recirculate back into the engine intake manifold where they can be drawn into the cylinders.

Idle air control system

The idle speed of an engine may be affected by a number of conditions. For example, a cold engine is inclined to run sluggishly at idle as well as under load. Such accessories as air conditioning and power steering may load the engine during idle and bring the idle speed down. Accessories that draw a large amount of current from the alternator, such as headlamps, window defoggers, cooling fans, etc., increase the load on the engine. So, to provide smooth idle under all conditions, and to provide the best overall fuel economy, the engine control system gives computer controlled, automatic idle speed control. Using the information provided by the sensors, the ECM calculates the best idle speed and brings it about through the IACV-AAC valve, which allows more, or less, air into the intake manifold. Because the air is measured by the mass air flow sensor, the injectors always follow along with the correct pulse duration, so the mixture is always correct.

ON BOARD DIAGNOSTIC SYSTEM

The ECM has an on board diagnostic system function, which monitors the engine and automatic transmission related circuits/components for problems. If the ECM senses a problem, it stores the information for retrieval by an experienced INFINITI technician at your dealership. So diagnosis and repair, even of this sophisticated system, may be made easier and more accurate.

ELECTRONICALLY CONTROLLED 4-SPEED AUTOMATIC TRANSMISSION

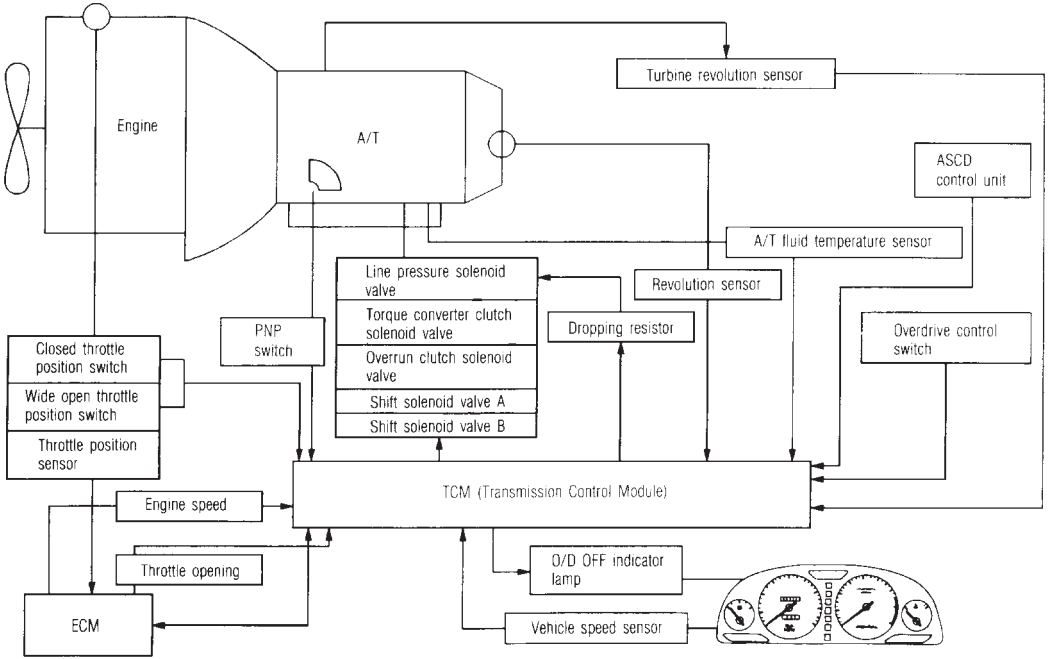

SIT0037B

The function of an automotive transmission, is to provide a means of matching engine speed and vehicle speed in such a way that the engine is kept in the most efficient RPM range at all times.

Hydraulic control

In your INFINITI transmission, hydraulic flow and pressure are under the control of the Transmission Control Module (TCM) which uses information from a number of sensors to calculate the most efficient gear ratio. The Transmission Control Module (TCM) selects the proper gear, it directs fluid to actuate the appropriate clutches, it controls fluid pressure precisely to allow smooth, shock-free shifts, and it controls the timing of torque converter lock-up.

Automatic transmission control functions:

Using the information provided by the sensors, the Transmission Control Module (TCM) calculates the best possible operation of the transmission for any condition by controlling the following functions:

- shift timing.
- lock-up timing.
- engine brake operation timing.

Self diagnosis:

Any electrical malfunction in the system will be sensed by the Transmission Control Module (TCM), which stores the information in memory.

ACTIVE DAMPER SUSPENSION (if so equipped)

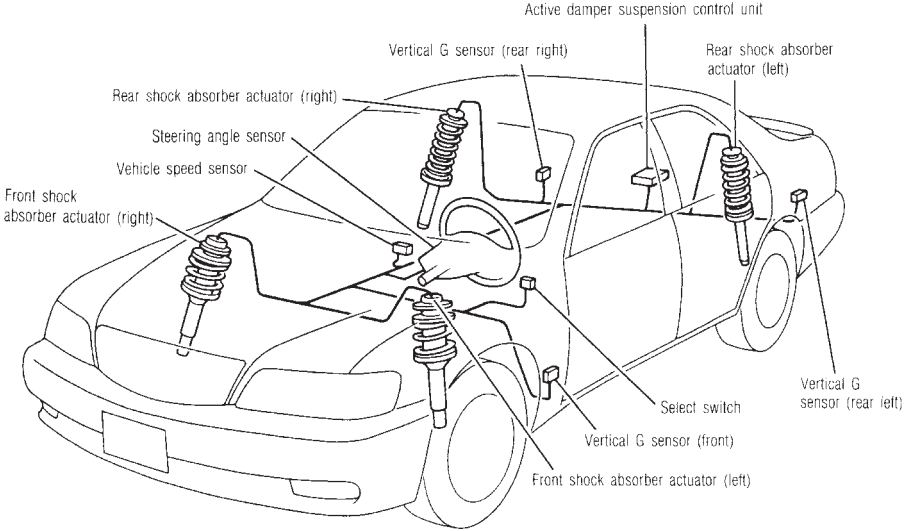

SIT0084

The active damper suspension controls damping force and restrains the movement of the vehicle body. It assures stable driving when the vehicle moves up and down on large rolling roads or when the vehicle rolls at cornering with a high centrifugal force.

The damping force of the shock absorbers can be adjusted to the level you desire. Set the switch to the position you desire while the ignition switch is ON.

Set the switch to the AUTO position for normal driving. The damping force will automatically adjust according to the road surface and driving conditions.

Set the switch to the SPORT position when you desire a firm feeling all the time.

The active damper suspension monitors vehicle body movement with a vertical G sensor. Shock absorber damping force is then adjusted in immediate response to this movement.

Vertical G sensors are installed at the front left side, the rear left side, and the rear right side. These sensors measure acceleration. The steering angle sensor measures the steering angle and the steering angle speed. Signals from these sensors are sent to the active damper suspension control unit.

Sensor signals and vehicle speed signals received by the active damper suspension control unit are instantaneously computed. Instruction data based on the received signals is then sent to the actuators (stepping motors) above each shock absorber. The actuators immediately operate to adjust shock absorber damping force.

For example, the high lateral G-forces generated during cornering or lane changes normally result in vehicle body roll. However, on a vehicle equipped with an active damper suspension, this roll is reduced. The damping force of the shock absorbers on the side of the vehicle toward which the roll occurs is instantaneously adjusted (increased) to minimize this roll. This also occurs during vehicle acceleration or hard braking. During acceleration, rear shock absorber damping force increases to minimize the front of the vehicle from rising (nose up). During braking, front shock absorber damping force increases to minimize the front of the vehicle from dipping (nose down).

System malfunction

In the event of an electrical system failure, a signal stored in the system's computer memory is automatically sent to the active damper suspension control unit and the actuators. The shock absorbers now function as they would on a vehicle not equipped with the active damper suspension function. Contact an authorized INFINITI dealer for service.

ANTI-LOCK BRAKE/TRACTION CONTROL SYSTEM

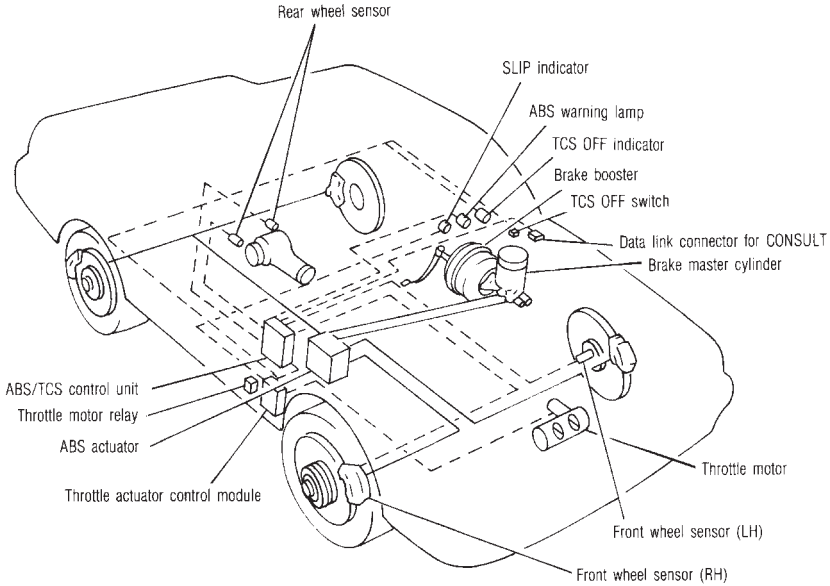

SIT0038

Anti-lock brake:

In sudden braking and on wet surfaces, the wheels are more easily locked. If the front wheels lock, steering control may be difficult.

If the rear wheels lock, swerving or spinning of the vehicle may result. To reduce this possibility, short and quick pumping of the brakes is needed, but this technique can be difficult for some drivers, especially in an emergency. The Anti-lock Brake System (ABS) can perform this pumping action quickly and is automatic when the driver depresses the brake pedal firmly. Since the braking force is controlled delicately by electronic control, wheel lock-up is minimized, and steering operation remains normal.

Brake pedal kickback remains minimal, and smooth pedal feel is ensured even when the ABS is operating.

Traction control system:

The ABS/Traction Control System (TCS) control unit detects conditions of driving wheel slippage by using the wheel speed signals sent from the 4 wheels. When slipping is excessive, the traction control system cuts fuel to the engine to reduce slipping and it also controls automatic transmission shifting if necessary. The system controls throttle openings so that optimum engine torque can be obtained in accordance with the driver's acceleration requirements. This system helps to make the vehicle easier to drive by reducing wheel spin when starting or accelerating in slippery conditions (for example, on wet snow-covered surfaces).

System malfunction

Anti-lock brake:

If the ABS/TCS control unit detects a malfunction in any of the ABS system electrical circuits, it will de-activate the anti-lock function by cutting electrical power to the ABS actuator. The braking system will then work as usual, without the anti-lock function.

If the control unit stops the ABS system operation, the ABS warning lamp will glow. This will aid your INFINITI dealership technician in diagnosis of the problem.

Traction control system:

If the ABS/TCS control unit detects a malfunction in any of the TCS system electrical circuits, it will de-activate the TCS function by cutting electrical power to the throttle actuator control module. The system will then work as usual, without the TCS function.

If the control unit stops the TCS system operation, the TCS OFF indicator and **SLIP** indicator will glow. This will aid your INFINITI dealership technician in diagnosis of the problem.

AUTOMATIC AIR CONDITIONER

For precision control over the interior climate of your INFINITI, there is a fully automatic air conditioning system. The system uses sensors, a control unit or auto amplifier, and actuators to provide the most comfortable temperature, humidity and air flow inside the vehicle. The auto amplifier also has a self diagnosis feature to recognize any system circuit malfunction and aid your INFINITI dealership technician in a quick, accurate repair if it becomes necessary.

The auto amplifier receives information from the control panel (used to select the interior climate) and from sensors placed in strategic locations in the vehicle. Once you have signaled a target temperature at the control panel, the auto amplifier uses information from the sensors to calculate what must be done.

V-6 variable displacement compressor

The variable compressor is basically a swash plate type that changes piston stroke in response to the required cooling capacity.

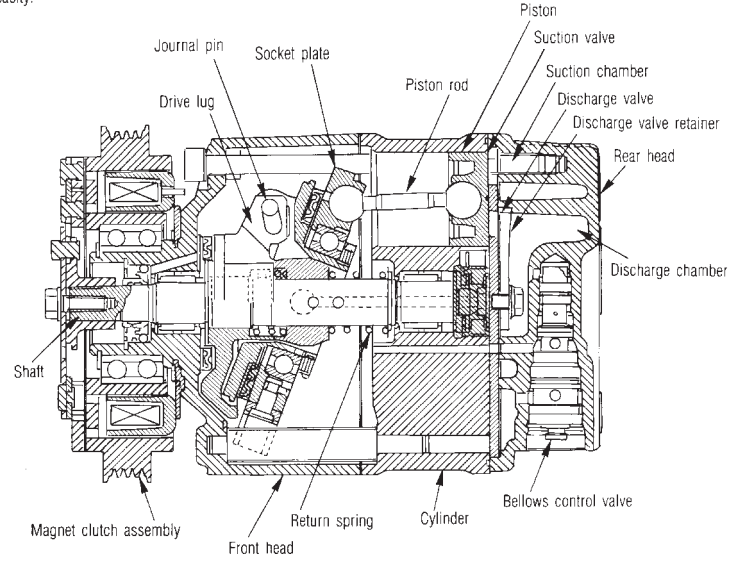

SIT0064

SUPPLEMENTAL RESTRAINT SYSTEM

Supplemental air bag and supplemental side air bag systems

Supplemental air bags are designed to inflate in certain types of frontal collisions, and supplemental side air bag is designed to inflate in certain types of side collisions.

Supplemental air bags help cushion the impact force to the front occupants' face and chest in certain types of frontal collisions in conjunction with the seat belts.

Supplemental side air bags help cushion the impact force to the front occupants' head and chest area in certain types of side collisions.

When supplemental air bags receive a signal from the diagnosis sensor unit for certain types of frontal collisions, the supplemental air bags inside the supplemental air bag modules fill with gas, inflating instantly.

When supplemental side air bags receive signals from the satellite sensor in the lower center pillar and the diagnosis sensor unit for certain types of side collisions, the supplemental side air bag inside the supplemental side air bag module fills with gas, inflating instantly.

The collision mode under which inflation occurs is different for the supplemental air bag and the supplemental side air bag. For example, even if the supplemental air bag activates, the supplemental side air bag might not activate.

In addition, in left side collisions, only the left supplemental side air bag is designed to inflate and in right side collisions, only the right supplemental side air bag is designed to inflate.

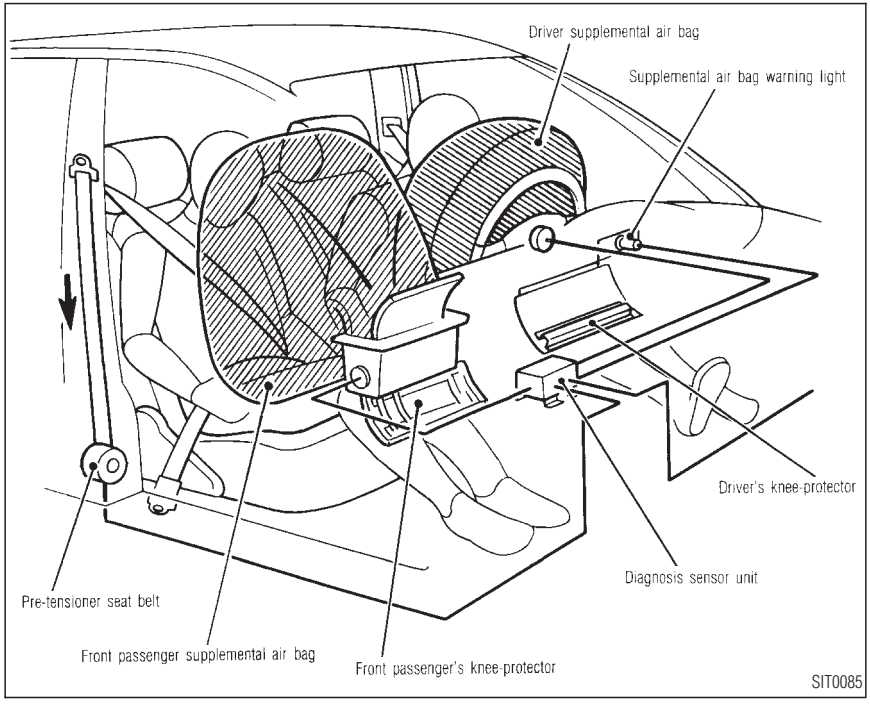
Driver supplemental air bag
Supplemental air bag warning light
Driver's knee-protector
Diagnosis sensor unit
Pre-tensioner seat belt
Front passenger supplemental air bag
Front passenger's knee-protector
SIT0085

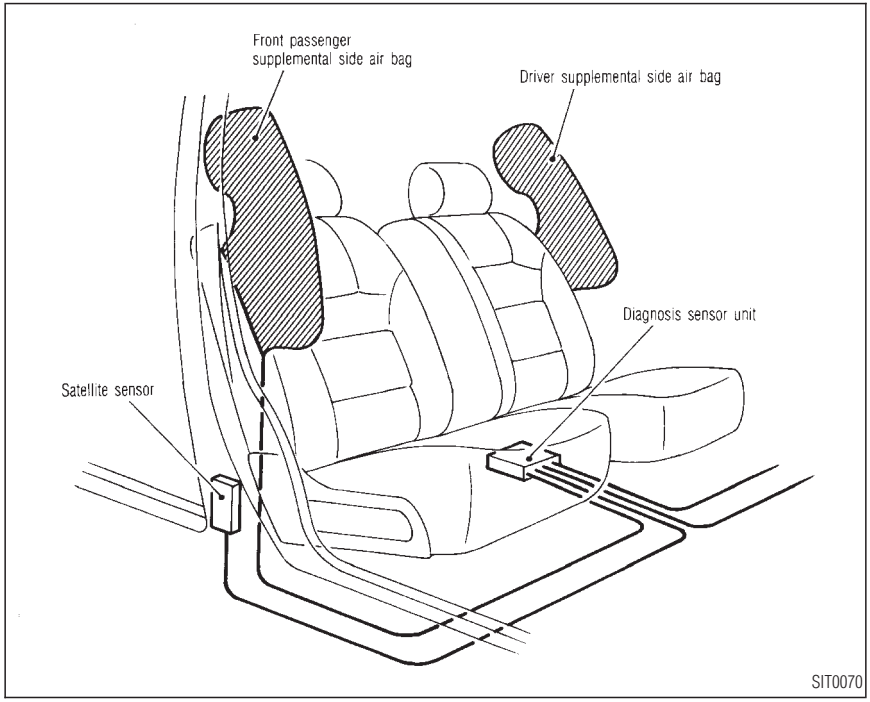

Pre-tensioner seat belt system

The front seat belt pre-tensioner, working with the retractor, helps tighten the seat belt when the vehicle is involved in certain types of collisions, thus helping to restrain the occupants on the front seats. This, in conjunction with the supplemental air bag systems, reduces impact forces to the occupants in a collision.

When the pre-tensioner receives a signal at the time of a collision, gas inside the pre-tensioner expands, thereby rotating the rotator to operate the retractor. The pre-tensioners will not usually operate when the vehicle is involved in side or rear-end collisions.

PAINT

HARD CLEAR COAT (New cross linking clear coat)

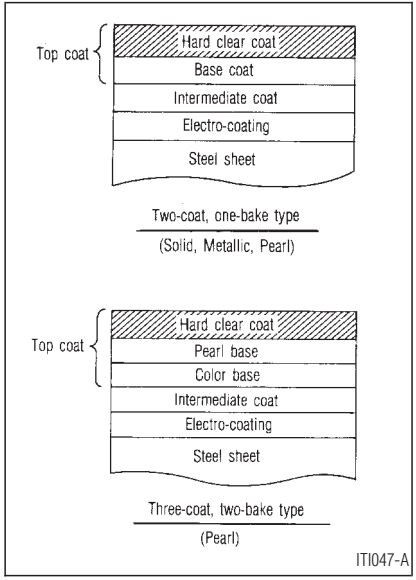

Your INFINITI paint coating has been applied with the finest appearance and best durability in mind:

- To ensure enhanced appearance, (solid, pearl and metallic paint clearness), the hard clear coat (2-coat/1-bake, or 3-coat/2-bake type) is used instead of the conventional clear coat (acrylic resin).
- Improved scratch resistance—
  The hard clear coat has higher resistance against scratches which may be caused by car wash equipment than the conventional coats.
- Refinishing the clear coat should only be done using hard clear type materials, to ensure compatibility in the rate of refinisher gloss retention.

CAPACITIES AND RECOMMENDED FUEL/LUBRICANTS

The following are approximate capacities. The actual refill capacities may be a little different. When refilling, follow the procedure instructed in the "8. Do-it-yourself" section to determine the proper refill capacity.

	Capacity (Approximate)			Recommended specifications
	US measure	Imp measure	Liter	
Fuel	21-1/8 gal	17-5/8 gal	80	Unleaded premium gasoline with an octane rating of at least 91 AKI (RON 96)*1
Engine oil (Drain and refill)*6				• API Certification Mark*2, *3 • API grade SG/SH, Energy Conserving II or API grade SJ, Energy Conserving*2, *3 • ILSAC grade GF-II*2, *3
With oil filter change	5-5/8 qt	4-5/8 qt	5.3	
Without oil filter change	5-1/4 qt	4-3/8 qt	5.0	
Cooling system				Genuine Nissan Anti-freeze coolant or equivalent
With reservoir	12-3/8 qt	10-1/4 qt	11.7	
Reservoir	3/4 qt	5/8 qt	0.7	
Differential gear oil	—	—	—	API GL-5*3
Automatic transmission fluid	Refill to the proper oil level according to the instructions in the "8. Do-it-yourself" section			Nissan Matic D (Continental US and Alaska) or Genuine Automatic Transmission Fluid (Canada).*5
Power steering fluid				Type DEXRON™III or equivalent
Brake fluid				Genuine Nissan Brake Fluid*4 or equivalent DOT 3 (US FMVSS No. 116)
Multi-purpose grease	—	—	—	NLGI No. 2 (Lithium soap base)
Air conditioning system refrigerant	—	—	—	HFC-134a (R-134a)
Air conditioning system lubricants				Nissan A/C System Oil Type S or equivalent

*1: For additional information, see later in this section for fuel recommendation.
*2: For additional information, see later in this section for engine oil and oil filter recommendation.
*3: For additional information, see later in this section for recommended SAE viscosity number.
*4: Available in mainland US through your INFINITI dealer.
*5: Dexron™ III/Mercon™ or equivalent may also be used. Outside the continental US and Alaska contact an INFINITI dealer for more information regarding suitable fluids, including recommended brand(s) of Dexron™ III/Mercon™ automatic transmission fluid.
*6: For additional information, see "Engine oil" in the "8. Do-it-yourself" section for changing engine oil.

FUEL RECOMMENDATION

In order to maintain engine and exhaust system durability and performance, unleaded premium gasoline with an octane rating of at least 91 AKI (Anti-Knock Index) number (Research octane number 96) must be used.

If premium gasoline is not available, unleaded regular gasoline with an octane rating of 87 AKI number (Research octane number 91) may be temporarily used, but only under the following precautions:

- Have the fuel tank filled only partially with unleaded regular gasoline, and fill up with unleaded premium gasoline as soon as possible.
- Avoid full throttle driving and abrupt acceleration

CAUTION

Use unleaded fuel only. Under no circumstances should leaded gasoline be used. It will damage your three way catalyst and increase dangerous emissions from your vehicle exhaust.

Using a fuel other than that specified could adversely affect the emission control devices and systems, and could also affect warranty coverage.

Reformulated gasoline

Some fuel suppliers are now producing reformulated gasolines. These gasolines are specially designed to reduce vehicle emissions. INFINITI supports efforts towards cleaner air and suggests that you use reformulated gasoline when available.

Gasoline containing oxygenates

Some fuel suppliers sell gasoline containing oxygenates such as ethanol, MTBE and methanol with or without advertising their presence. INFINITI does not recommend the use of fuels of which the oxygenate content and the fuel compatibility for your INFINITI cannot be readily determined. If in doubt, ask your service station manager.

If you use oxygenate-blend gasoline, please take the following precautions as the usage of such fuels may cause vehicle performance problems and/or fuel system damage.

- **The fuel should be unleaded and have an octane rating no lower than that recommended for unleaded gasoline.**
- **If an oxygenate-blend, excepting a methanol blend, is used, it should contain no more than 10% oxygen-**

ate. (MTBE may, however, be added up to 15%.)

- **If a methanol blend is used, it should contain no more than 5% methanol (methyl alcohol, wood alcohol). It should also contain a suitable amount of appropriate cosolvents and corrosion inhibitors. If not properly formulated with appropriate cosolvents and corrosion inhibitors, such methanol blends may cause fuel system damage and/or vehicle performance problems. At this time, sufficient data is not available to ensure that all methanol blends are suitable for use in INFINITI vehicles.**

If any undesirable driveability problems such as engine stalling and hard hot starting are experienced after using oxygenate-blend fuels, immediately change to a non-oxygenate fuel or a fuel with a low blend of MTBE.

Take care not to spill gasoline during refueling. Gasoline containing oxygenates can cause paint damage.

Aftermarket fuel additives

INFINITI does not recommend the use of any fuel additives (i.e. fuel injector cleaner, octane booster, intake valve deposit removers, etc.) which are sold commercially. Many of these additives intended for gum, varnish or deposit removal may contain active solvent or similar ingredients that can be harmful to the fuel system and engine.

Octane rating tips

In most parts of North America, you should use unleaded gasoline with an octane rating of at least 87 or 91 AKI (Anti-Knock Index) number. However, you may use unleaded gasoline with an octane rating as low as 85 AKI number in these high altitude areas [over 4,000 ft (1,219 m)] such as: Colorado, Montana, New Mexico, Utah, Wyoming, northeastern Nevada, southern Idaho, western South Dakota, western Nebraska, and that part of Texas which is directly south of New Mexico.

Using unleaded gasoline with an octane rating lower than stated above can cause persistent, heavy spark knock. (Spark knock is a metallic rapping noise.) If severe, this can lead to engine damage. If you detect a persistent heavy spark knock even when using gasoline of the stated octane rating, or if you hear steady spark knock while holding a steady speed on level roads, have your dealer correct the condition. Failure to correct the condition is misuse of the vehicle, for which INFINITI is not responsible.

Incorrect ignition timing will result in knocking, after-run or overheating. This in turn may cause excessive fuel consumption or damage to the engine. If any of the above symptoms are encountered, have your vehicle checked at

an INFINITI dealer or other competent service facility.

However, now and then you may notice light spark knock for a short time while accelerating or driving up hills. This is no cause for concern, because you get the greatest fuel benefit when there is light spark knock for a short time under heavy engine load.

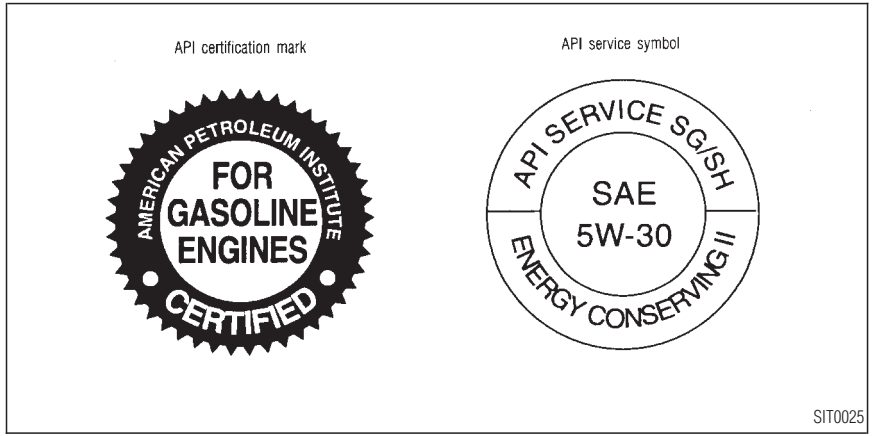

ENGINE OIL AND OIL FILTER RECOMMENDATION

Selecting the correct oil

It is essential to choose the correct quality, and viscosity oil to ensure satisfactory engine life and performance. Nissan recommends the use of a low friction oil (energy conserving oil) in order to improve fuel economy and conserve energy. Oils which do not have the specified quality label should not be used as they could cause engine damage.

Only those engine oils with the American Petroleum Institute (API) certification mark on the front of the container should be used. This

type of oil supersedes the existing API SG, SH or SJ and Energy Conserving II categories.

If you cannot find engine oil with the API certification mark, use an API grade SG/SH, Energy Conserving II or API grade SJ, Energy Conserving oil. An oil with a single designation SG, SH, SJ or in combination with other categories (for example, SG/CC or SG/CD) may also be used if one with the API certification mark cannot be found. An ILSAC grade GF-II oil can also be used.

Mineral based or synthetic type oils may be used in your INFINITI vehicle. These oils must however, meet the API quality and SAE viscosity ratings specified for your vehicle. Do not mix mineral based and synthetic type oils in the engine at the same time.

Oil additives

INFINITI does not recommend the use of oil additives. The use of an oil additive is not necessary when the proper oil type is used and maintenance intervals are followed.

Oil which may contain foreign matter or has been previously used should not be used.

Oil viscosity

The engine oil viscosity or thickness changes with temperature. Because of this, it is important that the engine oil viscosity be selected based on the temperatures at which the vehicle will be operated before the next oil change. The chart of recommended SAE viscosity number shows the recommended oil viscosities for the expected ambient temperatures. Choosing an oil viscosity other than that recommended could cause serious engine damage.

Selecting the correct oil filter

Your new vehicle is equipped with a high-quality genuine Nissan oil filter. When replacing, use the genuine oil filter or its equivalent for the reason described in change intervals.

Change intervals

The oil and oil filter change intervals for your engine are based on the use of the specified quality oils and filters. Oil and filter other than the specified quality, or oil and filter change intervals longer than recommended could reduce engine life. Damage to engines caused by improper maintenance or use of incorrect oil and filter quality and/or viscosity is not covered by the new INFINITI vehicle warranties.

Your engine was filled with a high quality engine oil when it was built. You do not have to change the oil before the first recommended change interval. Oil and filter change intervals depend upon how you use your vehicle. Operation under the following conditions may require more frequent oil and filter changes.

- repeated short distance driving at cold outside temperatures,
- driving in dusty conditions,
- extensive idling,
- towing a trailer.

RECOMMENDED SAE VISCOSITY NUMBER

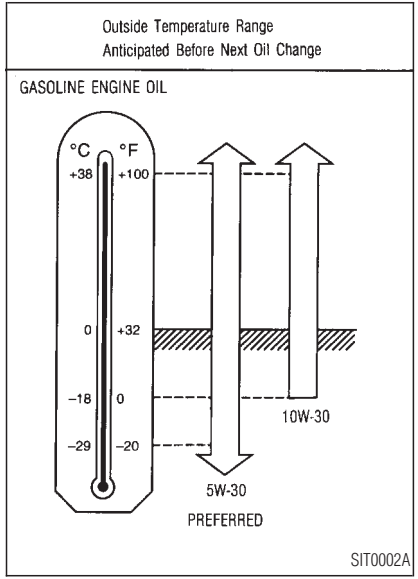

SAE 5W-30 viscosity oil is preferred for all temperatures. SAE 10W-30 viscosity oil may be used if the ambient temperature is above 0°F (–18°C).

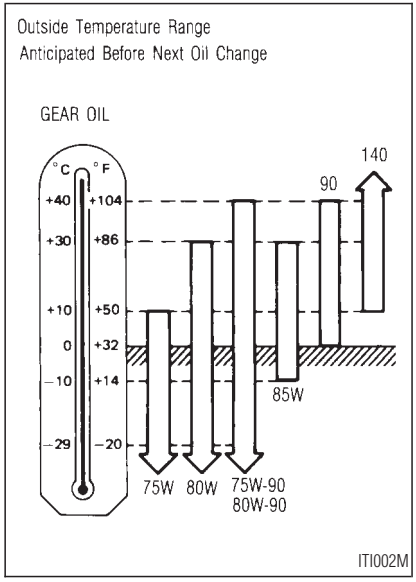

For differential gear oil, 80W-90 is preferable for ambient temperatures below 104°F (40°C).

AIR CONDITIONING SYSTEM REFRIGERANT AND LUBRICANT RECOMMENDATIONS

The air conditioning in your INFINITI vehicle must be charged with the refrigerant HFC-134a (R-134a) and the lubricant, Nissan A/C system oil Type S or the exact equivalents.

CAUTION

Use of any other refrigerant or lubricant will cause severe damage and you will need to replace your vehicle's entire air conditioning system.

The refrigerant HFC-134a (R-134a) in your INFINITI vehicle will not harm the earth's ozone layer. Although this refrigerant does not affect the earth's atmosphere, certain governmental regulations require the recovery and recycling of any refrigerant during automotive air conditioning system service. Your INFINITI dealer has the trained technicians and equipment needed to recover and recycle your air conditioning system refrigerant.

Contact your INFINITI dealer when servicing your air conditioning system.

SPECIFICATIONS

ENGINE

Model		VH41DE
Type		Gasoline, 4-cycle
Cylinder arrangement		8-cylinder, V-slanted at 90°
Bore × Stroke	in (mm)	3.661 × 2.992 (93.0 × 76.0)
Displacement	cu in (cm^3)	252.01 (4,130)
Firing order*		1-8-7-3-6-5-4-2*
Idle speed	rpm	See the emission control information label on the underside of the hood.
Ignition timing (BTDC)	degree/rpm	
CO percentage at idle speed	[No air]	
Spark plug	Standard	PFR5G-11
	Hot type	PFR4G-11
	Cold type	PFR6G-11
Camshaft operation		Timing chain
Alternator belt size		
Width × Length	in (mm)	0.839 × 29.53 (21.3 × 750)

The spark ignition system of this vehicle meets all requirements of the Canadian Interference-Causing Equipment Regulations.

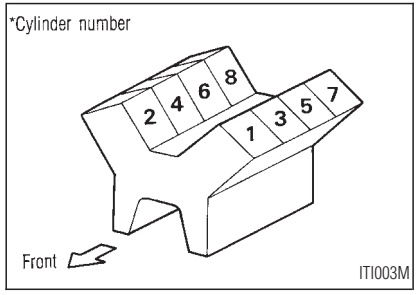

TIRES AND WHEELS

		Conventional		Spare (T-type)
Road wheel	Aluminum	16 x 7JJ	17 x 7.5JJ*	—
	Steel	—	—	16 x 4T
	Offset in (mm)	1.57 (40)	1.18 (30)	1.18 (30)
Tire size		P215/60R16 94V	P225/50R17 93V*	T135/90D16

*: Option

DIMENSIONS AND WEIGHTS

		Sedan
Overall length	in (mm)	199.2 (5,060)
Overall width	in (mm)	71.7 (1,820)
Overall height	in (mm)	56.9 (1,445)
Front tread	in (mm)	60.6 (1,540), 61.4 (1,560)*
Rear tread	in (mm)	60.6 (1,540), 61.4 (1,560)*
Wheelbase	in (mm)	111.4 (2,830)
Gross vehicle weight rating	lb (kg)	See the F.M.V.S.S. certification label on the driver's side lock pillar.
Gross axle weight rating		
Front	lb (kg)	
Rear	lb (kg)	

*: Models with P225/50R17 93V tire.

WHEN TRAVELING OR REGISTERING YOUR VEHICLE IN ANOTHER COUNTRY

If you plan to travel in another country, you should first find out if the fuel available is suitable for your vehicle's engine.

Using fuel with too low an octane rating may cause engine damage. All gasoline vehicles must be operated with unleaded gasoline. Therefore, avoid taking your vehicle to areas where appropriate fuel is not available.

When transferring the registration of your vehicle to another country, state, province or district, it may be necessary to modify the vehicle to meet local laws and regulations.

The laws and regulations for motor vehicle emission control and safety standards vary according to the country, state, province or district; therefore, vehicle specifications may differ.

When any vehicle is to be taken into another country, state, province or district and registered, its modifications, transportation, and registration are the responsibility of the user. INFINITI is not responsible for any inconvenience that may result.

VEHICLE IDENTIFICATION

VEHICLE IDENTIFICATION NUMBER (VIN) PLATE

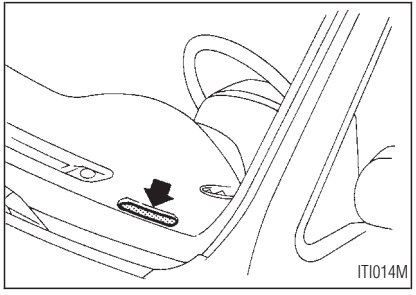

The vehicle identification number plate is attached as shown. This number is the identification for your vehicle and is used in the vehicle registration.

VEHICLE IDENTIFICATION NUMBER (Chassis number)

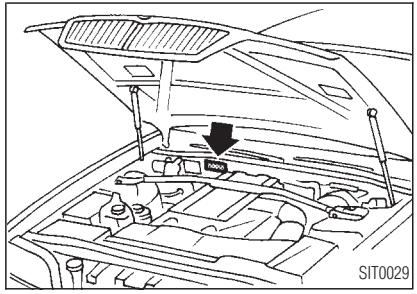

The number is stamped as shown.

ENGINE SERIAL NUMBER

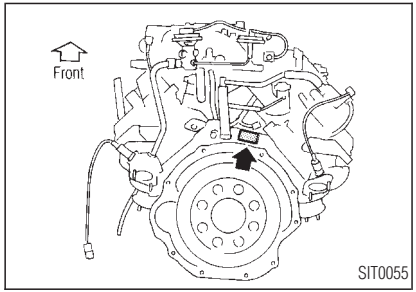

The number is stamped on the engine as shown.

F.M.V.S.S. CERTIFICATION LABEL

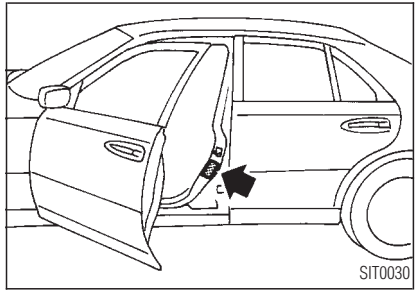

The Federal Motor Vehicle Safety Standards (F.M.V.S.S.) certification label is affixed as shown. This label contains valuable vehicle information, such as: Gross Vehicle Weight Ratings (GVWR), Gross Axle Weight Rating (GAWR), month and year of manufacture, Vehicle Identification Number, (VIN), etc. Review it carefully.

EMISSION CONTROL INFORMATION LABEL

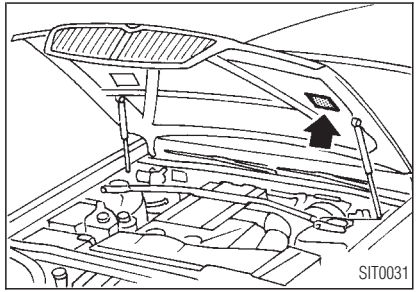

The emission control information label is attached as shown.

TIRE PLACARD

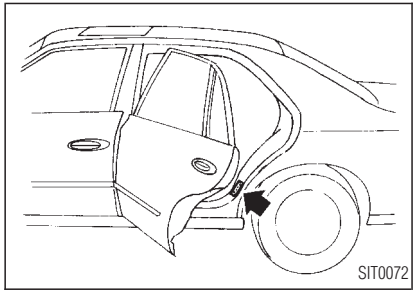

The cold tire pressure is shown on the tire placard located on the front face of the rear left wheel housing inside the vehicle.

AIR CONDITIONER SPECIFICATION LABEL

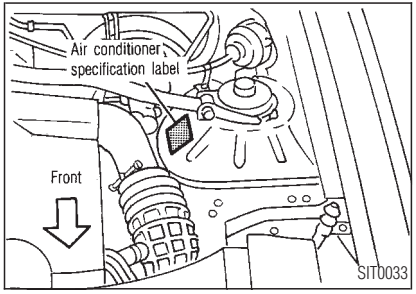

The air conditioner specification label is affixed on the strut tower as shown.

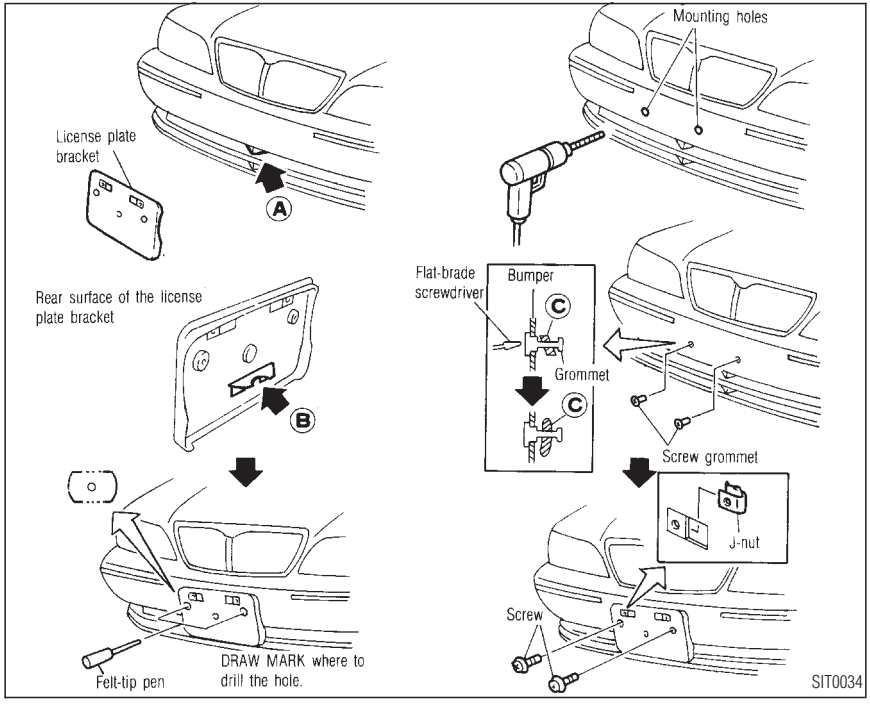

INSTALLING FRONT LICENSE PLATE

Use the following steps to mount the license plate:

Before mounting the license plate, confirm that the following parts are enclosed in the vinyl bag.

- License plate bracket
- J-nut x 2
- Screw x 2
- Screw grommet x 2

1. Temporarily place the license plate bracket while aligning part Ⓐ of the front bumper with part Ⓑ of the rear surface of the license plate bracket.
2. To determine where to drill the hole, mark along both sides of the mounting hole by using a felt-tip pen.
3. Remove the license plate bracket and

connect the arcs to form ovals. Mark the point in the center of each oval. These are the pilot drilling locations.

4. Carefully drill two pilot holes using a 0.39 inch (10 mm) drill bit at the marked locations. **(Be sure that the drill only goes through the fascia, or damage to the nut may occur.)**
5. Insert grommets into the hole on the fascia.
6. Insert a flat-blade screwdriver into the grommet hole to add 90° turn onto the part Ⓒ .
7. Insert a J-nut into the license plate bracket before placing the license plate bracket on the fascia.
8. Install the license plate bracket with screws.
9. Install the license plate with bolts that are no longer than 0.55 inch (14 mm).

VEHICLE LOADING INFORMATION

WARNING

- ***It is extremely dangerous to ride in a cargo area inside of a vehicle. In a collision, people riding in these areas are more likely to be seriously injured or killed.***
- ***Do not allow people to ride in any area of your vehicle that is not equipped with seats and seat belts.***
- ***Be sure everyone in your vehicle is in a seat and using a seat belt properly.***

TERMS

It is important to familiarize yourself with the following terms before loading your vehicle:

- Curb Weight (actual weight of your vehicle) - vehicle weight including: standard and optional equipment, fluids, emergency tools, and spare tire assembly. This weight **does not** include passengers and cargo.
- GVW (Gross Vehicle Weight) - curb weight plus the combined weight of passengers and cargo.
- GVWR (Gross Vehicle Weight Rating) - maximum total weight (load) limit specified for the vehicle.
- GAWR (Gross Axle Weight Rating) - maximum weight (load) limit specified for the front or rear axle.

DETERMINING VEHICLE LOAD CAPACITY

The load capacity of this vehicle is determined by weight, not by available cargo space. For example, a luggage rack, bike carrier, cartop carrier or similar equipment does not increase load carrying capacity of your vehicle.

To determine vehicle load capacity:

Vehicle weight can be determined by using a commercial-grade scale, found at places such as a truck stop, gravel quarry, grain elevator, or a scrap metal recycling facility.

1. Determine the curb weight of your vehicle.
2. Compare the curb weight amount to the GVWR specified for your vehicle to determine how much more weight your vehicle can carry.
3. After loading (cargo and passengers), reweigh your vehicle to determine if either GVWR or GAWR for your vehicle is exceeded. If GVWR is exceeded, remove cargo as necessary. If either the front or rear GAWR is exceeded, shift the load or remove cargo as necessary.

LOADING TIPS

- The GVW must not exceed GVWR or GAWR as specified on the F.M.V.S.S. certification label.
- Do not load the front and rear axle to the GAWR. Doing so will exceed the GVWR.

WARNING

- ***Properly secure all cargo to help prevent it from sliding or shifting. Do not place cargo higher than the seatbacks. In a sudden stop or collision, unsecured cargo could cause personal injury.***
- ***Do not load your vehicle any-heavier than the GVWR or the maximum front and rear GAWRs. If you do, parts on your vehicle can break, or it can change the way your vehicle handles. This could result in loss of control and cause personal injury.***
- ***Overloading can shorten the life of your vehicle. Failures caused by overloading are not covered by your warranty.***

TOWING A TRAILER

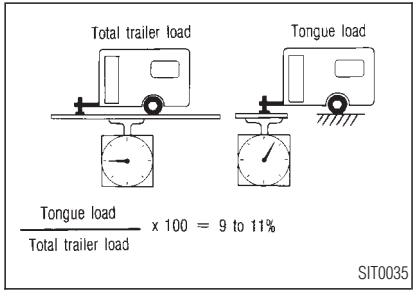

Your new vehicle was designed to be used primarily to carry passengers and cargo. Remember that towing a trailer will place additional loads on your vehicle's engine, drive train, steering, braking and other systems.

Information on trailer towing and the special equipment required should be obtained from a professional trailer dealer/installer.

MAXIMUM LOAD LIMITS

Maximum trailer loads

Never allow the total trailer load to exceed 1,000 lb (454 kg). The total trailer load equals trailer weight plus its cargo weight. Towing loads greater than 1,000 lb (454 kg) or using improper towing equipment could adversely affect vehicle handling, braking and performance.

WARNING

Vehicle damage and/or personal injury resulting from improper towing procedures is not covered by INFINITI warranties. Information on trailer towing and required towing equipment should be obtained from dealers who specialize in providing trailers and other towing equipment.

Tongue load

Keep the tongue load between 9 and 11% of the total trailer load. If the tongue load becomes excessive, rearrange cargo to allow for proper tongue load.

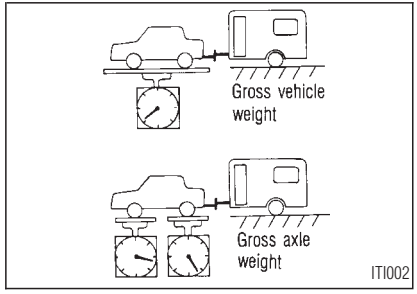

Maximum gross vehicle weight/maximum gross axle weight

The gross vehicle weight of the towing vehicle must not exceed GVWR shown on the F.M.V.S.S. certification label. The gross vehicle

weight equals the combined weight of the unloaded vehicle, passengers, luggage, hitch, trailer tongue load and any other optional equipment. In addition, front or rear gross axle weight must not exceed GAWR shown on the F.M.V.S.S. certification label.

TOWING LOAD/SPECIFICATION CHART Unit: lb (kg)	
MAXIMUM TOWING LOAD	1,000 (454)
MAXIMUM TONGUE LOAD	110 (49)

TOWING SAFETY

Trailer hitch

Choose a proper hitch for your vehicle and trailer. A genuine INFINITI trailer hitch is available from your INFINITI dealer (Canada only). Make sure the trailer hitch is securely attached to the vehicle, to help avoid personal injury or property damage due to sway caused by crosswinds, rough road surfaces or passing trucks.

CAUTION

- ***Do not use axle-mounted hitches.***
- ***The hitch should not be attached to or affect the operation of the impact-absorbing bumper.***
- ***Do not modify the vehicle exhaust system, brake system, etc. when the hitch is installed.***
- ***To reduce the possibility of additional damage if your vehicle is struck from the rear, where practical, remove the hitch when not in use. Remove the receiver when not in use. After the hitch is removed, seal the bolt holes to prevent exhaust fumes, water or dust from entering the passenger compartment.***
- ***Regularly check that all hitch mounting bolts are securely mounted.***

Tire pressures

- When towing a trailer, inflate the vehicle tires to the recommended cold tire pressure indicated on the tire placard (located on the inside of the center console lid).
- Trailer tire condition, size, load rating and proper inflation pressure should be in accordance with the trailer and tire manufacturers' specifications.

Safety chains

Always use a suitable chain between your vehicle and the trailer. The chain should be crossed and should be attached to the hitch,

not to the vehicle bumper or axle. Be sure to leave enough slack in the chain to permit turning corners.

Trailer lights

Trailer lights should comply with federal and/or local regulations. When wiring the vehicle for towing, connect the stop and tail light pickup into the vehicle electrical circuit at a point between the sensor and stop light switch or light switch.

Trailer brakes

If your trailer is equipped with a braking system, make sure it conforms to federal and/or local regulations and that it is properly installed.

WARNING

Never connect a trailer brake system directly to the vehicle brake system.

Pre-towing tips

- Be certain your vehicle maintains a level position when a loaded or unloaded trailer is hitched. Do not drive the vehicle if it has an abnormal nose-up or nose-down condition; check for improper tongue load, overload, worn suspension or other possible causes of either condition.
- Always secure items in the trailer to prevent load shifts while driving.
- Be certain your rear view mirrors conform to all federal, state or local regulations. If not, install any mirrors required for towing before driving the vehicle.

Trailer towing tips

In order to gain skill and an understanding of the vehicle's behavior, you should practice turning, stopping and backing up in an area which is free from traffic. Steering stability, and braking performance will be somewhat different than under normal driving conditions.

- Always secure items in the trailer to prevent load shift while driving.
- Avoid abrupt starts, acceleration or stops.
- Avoid sharp turns or lane changes.
- Always drive your vehicle at a moderate speed.
- Always block the wheels on both vehicle and trailer when parking. Parking on a slope is not recommended; however, if you must do so, and if your vehicle is equipped with automatic transmission, first block the wheels and apply the parking brake, and then move the transmission selector lever into the P (Park) position. If you move the selector lever to the P (Park) position before blocking the wheels and applying the parking brake, transmission damage could occur.

- When going down a hill, shift into a lower gear and use the engine braking effect. When ascending a long grade, downshift the transmission to a lower gear and reduce speed to reduce chances of engine overloading and/or overheating.
- If the engine coolant rises to an extremely high temperature when the air conditioning system is on, turn off the air conditioner. Coolant heat can be additionally vented by opening the windows, switching the fan control to high and setting the temperature control to the HOT position.
- Trailer towing requires more fuel than normal circumstances.
- Avoid towing a trailer for the first 500 miles (800 km).
- Have your vehicle serviced more often than at intervals specified in the recommended maintenance schedule.
- When making a turn, your trailer wheels will be closer to the inside of the turn than your vehicle wheels. To compensate for this, make a larger than normal turning radius during the turn.
- Crosswinds and rough roads will adversely affect vehicle/trailer handling, possibly causing vehicle sway. When being passed by larger vehicles, be prepared for possible changes in crosswinds that could affect vehicle handling. If swaying does occur, firmly grip the steering wheel, steer straight ahead, and immediately (but gradually) reduce vehicle speed. This combination will help stabilize the vehicle. Never increase speed.
- Be careful when passing other vehicles. Passing while towing a trailer requires considerably more distance than normal passing. Remember the length of the trailer must also pass the other vehicle before you can safely change lanes.
- To maintain engine braking efficiency and electrical charging performance, do not use overdrive (automatic transmission).
- Avoid holding the brake pedal down too long or too frequently. This could cause the brakes to overheat, resulting in reduced braking efficiency.

When towing a trailer, change fluid in the transmission more frequently.

See “Periodic maintenance schedules” in the “9. Maintenance” section.

UNIFORM TIRE QUALITY GRADING

DOT (Department Of Transportation) Quality Grades: All passenger car tires must conform to federal safety requirements in addition to these grades.

Treadwear

Treadwear grade is a comparative rating based on tire wear rate when tested under controlled conditions on specified government test courses. For example, a tire graded 150 would wear one and a half (1-1/2) times as well on the government course as a tire graded 100. However, relative tire performance depends on actual driving conditions, and may vary significantly from the norm due to variations in driving habits, service practices and differences in road characteristics and climate.

Traction AA, A, B and C

The traction grades from highest to lowest are AA, A, B and C. Those grades represent the tire's ability to stop on wet pavement as measured under controlled conditions on specified government test surfaces of asphalt and concrete. A tire marked C may have poor traction performance.

WARNING

The traction grade assigned to your vehicle tires is based on straight-ahead braking traction tests and does not include acceleration cornering hydroplaning or speak traction characteristics.

Temperature A, B and C

Temperature grades are A (the highest), B, and C. They represent a tire's resistance to heat build-up, and its ability to dissipate heat when tested under controlled conditions on a specified indoor laboratory test wheel. Sustained high temperature can cause tire material to degenerate, reducing tire life. Excessive temperatures can lead to sudden tire failure. Grade C corresponds to a performance level which all passenger car tires must meet under the Federal Motor Vehicle Safety Standard No. 109. Grades A and B represent higher levels of performance on laboratory test wheels than the minimum required by law.

WARNING

The temperature grade is established for a tire that is properly inflated and not overloaded. Excessive speed, underinflation, or excessive loading, either separately or in combination, can cause heat

build up and possible tire failure.

EMISSION CONTROL SYSTEM WARRANTY

Your INFINITI is covered by the following emission warranties.

For US:

- Emission Defects Warranty
- Emissions Performance Warranty (See Warranty Information Booklet for details.)

For Canada:

Emission Control System Warranty

Details of these warranties may be found with other vehicle warranties in your Warranty Information Booklet that comes with your INFINITI. If you did not receive a Warranty Information Booklet, or it has become lost, you may obtain a replacement by writing to:

- INFINITI Division
  Nissan Motor Corporation U.S.A.
  Consumer Affairs Department
  P.O. Box 47038, Gardena, CA 90248-0191
- Nissan Canada Inc.
  5290 Orbitor Drive
  Mississauga, Ontario,
  L4W 4Z5
- INFINITI Division
  Nissan Motor Corporation in Hawaii, Ltd.
  Consumer Affairs Department
  2880 Kilihau Street
  Honolulu, Hawaii 96819

REPORTING SAFETY DEFECTS (US only)

If you believe that your vehicle has a defect which could cause a crash or could cause injury or death, you should immediately inform the National Highway Traffic Safety Administration (NHTSA) in addition to notifying INFINITI.

If NHTSA receives similar complaints, it may open an investigation, and if it finds that a safety defect exists in a group of vehicles, it may order a recall and remedy campaign. However, NHTSA cannot become involved in individual problems between you, your dealer, or INFINITI.

To contact NHTSA, you may either call the Auto Safety Hotline toll-free at 1-800-424-9393 (or 366-0123 in Washington, D.C. area) or write to: NHTSA, U.S. Department of Transportation, Washington, D.C. 20590. You can also obtain

other information about motor vehicle safety from the Hotline.

You may notify INFINITI by contacting our Consumer Affairs Department, toll-free, at 1-800-662-6200.
In Hawaii call 808-836-0848.

READINESS FOR INSPECTION/ MAINTENANCE (I/M) TEST (US only)

Due to legal requirements in some states/areas, your vehicle may be required to be in what is called the ready condition for an Inspection/Maintenance (I/M) test of the emission control system.

The vehicle is set to the ready condition when it is driven through certain driving patterns. Usually, the ready condition can be obtained by ordinary usage of the vehicle.

If a powertrain system component is repaired or the battery is disconnected, the vehicle may be reset to a not ready condition. Before taking the I/M test, drive the vehicle through the following pattern to set the vehicle to the ready condition. If you cannot or do not want to perform the driving pattern, an INFINITI dealer can conduct it for you.

WARNING

Always drive the vehicle in a safe manner according to traffic conditions and obey all traffic laws.

1. Start the engine when the engine coolant temperature gauge needle points to C. Allow the engine to idle until the gauge needle points between the C and H (normal operating temperature).
2. Accelerate the vehicle to 55 MPH (88 km/h), then quickly release the accelerator pedal completely and keep it released for at least 6 seconds.
3. Quickly depress the accelerator pedal for a moment, then drive the vehicle at a speed of 53 to 60 MPH (86 to 96 km/h) for at least 5 minutes.
4. Stop the vehicle.

5. Accelerate the vehicle to 35 MPH (55 km/h) and maintain the speed for 20 seconds.
6. Repeat steps 4 and 5 at least 3 times.
7. Accelerate the vehicle to 55 MPH (88 km/h) and maintain the speed for at least 3 minutes.
8. Stop the vehicle and turn the engine off.
9. Repeat steps 1 through 8 at least one more time.

If step 1 through 7 is interrupted, repeat the preceding step. Any safe driving mode is acceptable between steps. Do not stop the engine until step 7 is completed.

11 INDEX

A

ABS (Anti-lock brake system) 5-20
Active damper suspension..... 5-19
Active damper suspension mode select switch 2-25
Air bag
Warning light 1-18, 2-9
Air bag system
(See supplemental restraint system)..... 1-12
Side (See supplemental side air bag system)..... 1-14
Air cleaner housing filter 8-17
Air conditioner
Air conditioner operation 4-3
Air conditioner service..... 4-3, 4-6
Air conditioner specification label 4-3, 10-30
Air conditioner system refrigerant and lubrication recommendations 4-3
Air filter 4-6
Heater and air conditioner (automatic) (if so equipped) 4-3
Air conditioning system refrigerant and lubricant recommendations 10-24
Air flow charts 4-3
Alcohol drugs and driving..... 5-4
AM-FM radio with cassette player 4-7
AM-FM radio with cassette player and compact disc player 4-7
AM-FM radio with compact disc player 4-7
Ambient temperature switch (AMB), Air conditioner ... 4-5
Anchor point locations
Top tether strap..... 1-37
Antenna
Power 4-20
Anti-lock Brake System (ABS)..... 5-20
Anti-lock brake warning light 2-10
Appearance care
Exterior appearance care..... 7-2
Interior appearance care..... 7-4
Ashtrays (See cigarette lighters and ashtrays)..... 2-27
Audio system 4-7
Automatic
Automatic transmission fluid (ATF)..... 8-10
Drive positioner..... 3-16
Driving with automatic transmission 5-8
Transmission selector lever lock release..... 5-11
Avoiding collision and rollover 5-4

B

Battery 8-14
Battery replacement, (See multi-remote control system)..... 3-7
Before starting the engine 5-7
Belts (See drive belts) 8-15
Brake
Anti-lock brake system (ABS)..... 5-20
Brake booster 8-20
Brake fluid 8-13
Brake pedal 8-19
Brake pedal check..... 8-19
Parking brake check..... 5-14, 8-19
Parking brake operation..... 5-14
System..... 5-20
Warning light 2-9
Break-in schedule 5-17
Bulb check/instrument panel 2-7
Bulb replacement 8-23

C

Capacities and recommended fuel/lubricants..... 10-18
Car phone 4-21

INDEX

Cassette tape operation 4-7
Catalytic converter, Three way catalyst 5-3
CB radio or car phone 4-21
Cellular phone
- Steering switch 2-53
- Switch operation 2-54

Child restraints 1-28
- Installation on front passenger seat 1-38
- Installation on rear seat outboard or center position 1-31
- Precautions on child restraints 1-28
- Top tether strap anchor point locations 1-37
- With top tether strap 1-36

Child safety 1-22
Child safety rear door lock 3-4
Chimes 2-13
Cigarette lighters and ashtrays 2-27
Circuit breaker, Fusible link 8-21
Cleaning exterior and interior 7-4
Clock 2-34
Cold weather driving 5-23
Compact disc (CD) player operation 4-7
Compact spare tire 8-37
Console box 2-29
Controls
- Audio controls 4-7
- Audio controls (rear) 4-7
- Audio controls (steering wheel) 4-7
- Heater and air conditioner controls (automatic) 4-3

Coolant
- Capacities and recommended fuel/ lubricants 10-18
- Changing engine coolant 8-6
- Checking engine coolant level 8-5

Corrosion protection 7-6
Cruise control 5-15
Cup holders 2-28

D

Daytime running light system 2-21
Defogger switch, Rear window and outside mirror defogger switch 2-18
Dimensions and weights 10-27
Door ajar warning light 2-8
Drive belts 8-15
Drive positioner, Automatic 3-16
Driving
- Cold weather driving 5-23
- Driving with automatic transmission 5-8
- Precautions when starting and driving 5-2

E

Economy, Fuel 5-17
Emission control information label 10-29
Emission control system warranty 10-39
Engine
- Before starting the engine 5-7
- Block heater 5-25
- Capacities and recommended fuel/lubricants 10-18
- Changing engine coolant 8-6
- Changing engine oil 8-8
- Changing engine oil filter 8-10
- Checking engine coolant level 8-5
- Checking engine oil level 8-7
- Coolant temperature gauge 2-5
- Engine compartment check locations 8-4
- Engine cooling system 8-5
- Engine oil 8-7
- Engine oil and oil filter recommendation 10-21
- Engine oil viscosity 10-22
- Engine serial number 10-29
- Engine specifications 10-25
- If your engine overheats 6-9

Starting the engine 5-7
Exhaust gas (Carbon monoxide) 5-2

F

F.M.V.S.S. certification label 10-29
Filter, Air cleaner housing filter 8-17
Flashers (See hazard warning flasher switch) 2-23
Flat tire 6-2
Floor mat cleaning 7-4
Fluid
Automatic transmission fluid (ATF) 8-10
Brake fluid 8-13
Capacities and recommended fuel/lubricants 10-18
Engine coolant 8-5
Engine oil 8-7
Power steering fluid 8-12
Window washer fluid 8-13
Fog light switch 2-23
Front power seat adjustment 1-3
Fuel
Capacities and recommended fuel/lubricants 10-18
Filler cap 3-11
Filler lid 3-11
Filler lid and cap 3-11
Filler lid opener lever 3-11
Fuel economy 5-17
Fuel octane rating 10-19
Fuel recommendation 10-19
Gauge 2-5
Fuses 8-21
Fusible links 8-21

G

Gas cap 3-11
Gauge 2-3
Engine coolant temperature gauge 2-5
Fuel gauge 2-5
Odometer 2-4
Speedometer 2-4
Tachometer 2-4
General maintenance 9-2
Glove box 2-29
Glove box lock 2-29

H

Handset operation 2-50
Hazard warning flasher switch 2-23
Head restraints 1-4
Headlamps, (Bulb replacement) 8-24
Headlights
Aiming control 2-20
Headlight switch 2-19
Headlights, (Bulb replacement) 8-24
Xenon headlights 2-18
Heated seats 2-24
Heater
Engine coolant heater 5-25
Heater and air conditioner (automatic) (if so equipped) 4-3
HomeLink®, Universal Transceiver 2-36
Hood, release 3-9
Horn 2-24
How to stop alarm, Theft warning 2-15

I

Ignition switch 5-5
Automatic transmission models 5-5
Key positions 5-6
Indicator lights and chimes (See warning/indicator lights and chimes) 2-10
Infiniti Communicator, False activation 2-53

INDEX

Infiniti Communicator, Indicator light description 2-49
Infiniti Communicator, Outline 2-42
Infiniti Communicator, Password 2-53
Infiniti Communicator, Payment for use 2-50
Infiniti Communicator, Purpose..... 2-42
Infiniti Communicator, Quick summary..... 2-43
Infiniti Communicator, Safe operating recommendation..... 2-42
Infiniti Communicator, System description 2-45
Infiniti Communicator, System function..... 2-43
Infiniti Communicator, System limitation..... 2-50
Inspection/maintenance (I/M) test 10-40
Instrument panel 2-2
Integrated HomeLink® Universal Transceiver..... 2-36
Interior light replacement..... 8-26
Interior lights 2-34

J

Jump starting..... 6-6

K

Keyless entry, (See multi-remote control system)..... 3-5
Keys 3-2

L

Label, Air conditioner specification label..... 10-30
Label, Emission control information label 10-29
Label, F.M.V.S.S. certification label 10-29
Labels
- Air conditioner specification label 4-3
- Engine serial number..... 10-29
- Vehicle identification number (VIN)..... 10-28

Lamp replacement..... 8-23
License plate, Installing front license plate..... 10-31
Light
- Air bag warning light..... 1-18
- Bulb replacement 8-23
- Fog light switch 2-23
- Headlamps (Bulb replacement)..... 8-24
- Headlight switch..... 2-19
- Headlights (Bulb replacement)..... 8-24
- Infiniti Communicator indicator 2-49
- Interior lights..... 2-34
- Map lights..... 2-34
- Personal lights 2-35
- Spot lights..... 2-34
- Trunk light..... 2-36
- Vanity mirror lights..... 2-36
- Warning/indicator lights and chimes..... 2-8, 2-10
- Xenon headlights 2-18

Lights, Exterior and interior light replacement..... 8-26
Loading information (See vehicle loading information)..... 10-32
Lock
- Door locks..... 3-3
- Glove box lock..... 2-29
- Power door lock..... 3-3
- Trunk lid lock opener lever 3-9

M

Maintenance
- Battery 8-14
- Explanation of maintenance items 9-3, 9-11
- General maintenance..... 9-2
- Inside the vehicle..... 9-2
- Maintenance precautions 8-2
- Outside the vehicle 9-2
- Periodic maintenance schedules..... 9-5
- Seat belt maintenance..... 1-28
- Under the hood and vehicle 9-4

Map lights 2-34
Meters and gauges 2-3
Mirror
Outside mirror 3-15
Outside mirror control 3-15
Outside mirrors 3-15
Multi-remote control system 3-5

N

New vehicle break-in 5-17

O

Odometer 2-4
Oil
Capacities and recommended fuel/lubricants 10-18
Changing engine oil 8-8
Changing engine oil filter 8-10
Checking engine oil level 8-7
Engine oil 8-7
Engine oil viscosity 10-22
Outside mirror 3-15
Outside mirror control 3-15
Outside mirrors 3-15
Overdrive switch 5-12
Overheat, If your vehicle overheats 6-9

P

Paint, Information 10-17
Parking
Brake check 8-19
Parking brake check 5-14
Parking brake operation 5-14
Parking/parking on hills 5-14
Parking/parking on hills 5-18
Password, Infiniti Communicator 2-53
Periodic maintenance schedules 9-5
Personal lights 2-35
Power
Front seat adjustment 1-3
Power door lock 3-3
Power steering fluid 8-12
Power steering system 5-19
Power windows 2-30
Socket 2-26
Pre-tensioner seat belt system 1-16
Precautions
Cruise control precautions 5-15
Maintenance precautions 8-2
On child restraints 1-28
On seat belt usage 1-19
On supplemental restraint system 1-5
Precautions when starting and driving 5-2
Push starting 6-9

R

Radio
AM-FM radio with cassette player 4-7
AM-FM radio with cassette player and compact disc player 4-7
AM-FM radio with compact disc player 4-7
Cassette player operation 4-7
CB radio or car phone 4-7, 4-21
Compact disc (CD) player operation 4-7
Readiness for inspection/maintenance (I/M) test (USA only) 10-40
Rear door lock, Child safety rear door lock 3-4
Rear power point 2-26
Rear sun shade 2-33
Rear sun shade cleaning 7-5
Rear window and outside mirror defogger switch 2-18
Registering your vehicle in another country 10-27

INDEX

Remote keyless entry, (See multi-remote control system) ... 3-5
Reporting safety defects (USA only) ... 10-39
Roadside assistance program ... 6-2
Rollover ... 5-4

S

Safety
- Child seat belts ... 1-22
- Infiniti Communicator operating ... 2-42
- Reporting safety defects (USA only) ... 10-39
- Towing safety ... 10-35

Seat adjustment, Front power seat adjustment ... 1-3
Seat belt extenders ... 1-28
Seat belt maintenance ... 1-28
Seat belt warning light ... 1-19
Seat belt warning light and chime ... 2-8
Seat belt(s)
- Child safety ... 1-22
- Infants and small children ... 1-23
- Injured persons ... 1-24
- Larger children ... 1-23
- Pre-tensioner seat belt system ... 1-16
- Precautions on seat belt usage ... 1-19
- Pregnant women ... 1-24
- Seat belt cleaning ... 7-5
- Seat belts ... 1-19
- Three-point type with retractor ... 1-24

Seat(s)
- Heated seats ... 2-24
- Seats ... 1-2

Security system (See theft warning) ... 2-14
Security system (Infiniti Vehicle Immobiliser System)
- Engine start ... 5-6

Servicing air conditioner ... 4-3, 4-6
Shift lock release ... 5-11
Shifting, Automatic transmission ... 5-8
Shoulder belt height adjustment, For front seats ... 1-27
Side air bag system (See supplemental side air bag system) ... 1-14
Spark plugs ... 8-16
Speedometer ... 2-4
Spot lights ... 2-34
Starting
- Before starting the engine ... 5-7
- Jump starting ... 6-6
- Precautions when starting and driving ... 5-2
- Push starting ... 6-9
- Starting the engine ... 5-7

Steering
- Power steering fluid ... 8-12
- Power steering system ... 5-19
- Steering switch for cellular phone ... 2-53
- Tilting steering wheel ... 3-13

Storage ... 2-28
Sun shade ... 2-32
- Rear sun shade ... 2-33
- Rear sun shade cleaning ... 7-5

Sun visors ... 3-14
Supplemental air bag system ... 1-12
Supplemental air bag warning light ... 1-18, 2-9
Supplemental restraint system ... 1-5
- Precautions on supplemental restraint system ... 1-5

Supplemental side air bag system ... 1-14
Suspension
- Active damper suspension ... 5-19
- Active damper suspension mode select switch ... 2-25

Switch
- Active damper suspension mode select switch ... 2-25
- Cellular phone, Steering switch ... 2-53
- Fog light switch ... 2-23
- Hazard warning flasher switch ... 2-23
- Headlight aiming control ... 2-20
- Headlight switch ... 2-19

Ignition switch 5-5
Ignition switch automatic transmission models 5-5
Overdrive switch 5-12
Rear window and outside mirror defogger switch 2-18
Traction control system cancel switch 2-25
Turn signal switch 2-22

T

Tachometer 2-4
Temperature gauge, Engine coolant temperature gauge 2-5
Theft warning 2-14
Theft (Infiniti Vehicle Immobiliser System)
Engine start 5-6
Three way catalyst 5-3
Tilting steering wheel 3-13
Tire
Flat tire 6-2
Spare tire 8-37
Tire chains 8-34
Tire placard 10-30
Tire pressure 8-33
Tire rotation 8-35
Type of tires 8-34
Uniform tire quality grading 10-38
Wheel/tire size 10-26
Wheels and tires 8-33
Top tether strap child restraints 1-36
Towing
Tow truck towing 6-10
Towing a trailer 10-34
Towing load/specification chart 10-34
Towing safety 10-35
Traction control system 5-22
Traction control system (TCS) cancel switch 2-25
Trailer towing 10-34
Transceiver, Integrated HomeLink® Universal 2-36
Transmission
Automatic transmission fluid (ATF) 8-10
Driving with automatic transmission 5-8
Transmission selector lever lock release 5-11
Transmitter, (See multi-remote control system) 3-5
Traveling or registering your vehicle in another country 10-27
Trunk lid lock opener lever 3-9
Trunk light 2-36
Turn signal switch 2-22

U

Underbody cleaning 7-3
Uniform tire quality grading 10-38

V

Vanity mirror lights 2-36
Vehicle
Dimensions and weights 10-27
Identification number (VIN) 10-28
Loading information 10-32
Major vehicle systems and how they work 10-2
Recovery, (freeing a stuck vehicle) 6-12
Ventilators 4-2

W

Warning
Hazard warning flasher switch 2-23
Theft warning 2-14
Warning light
Air bag warning light 1-18, 2-9
Brake warning light 2-9
Door ajar 2-8

Seat belt warning light and chime 2-8
Warning/indicator lights and chimes 2-8
Warranty, Emission control system warranty 10-39
Washer switch, Windshield wiper and washer switch 2-16
Washing 7-2
Waxing 7-2
Weights (See dimensions and weights) 10-27
Wheel/tire size 10-26
Wheels and tires 8-33
Window washer fluid 8-13
Window(s)
Cleaning 7-3
Power windows 2-30
Windshield wiper and washer switch 2-16
Wiper
Blades 8-17
Windshield wiper and washer switch 2-16

X

Xenon headlights 2-18

GAS STATION INFORMATION

FUEL RECOMMENDATION:

In order to maintain engine and exhaust system durability and performance, unleaded premium gasoline with an octane rating of at least 91 AKI (Anti-Knock Index) number (Research octane number 96) must be used.

If premium gasoline is not available, unleaded regular gasoline with an octane rating of 87 AKI number (Research octane number 91) may be temporarily used, but only under the following precautions:

- Have the fuel tank filled only partially with unleaded regular gasoline, and fill up with unleaded premium gasoline as soon as possible.
- Avoid full throttle driving and abrupt acceleration

CAUTION

Use unleaded fuel only. Under no circumstances should leaded gasoline be used. It will damage your three way catalyst and increase dangerous emissions from your vehicle exhaust.

Using a fuel other than that specified could adversely affect the emission control devices and systems, and could also affect the warranty coverage.

For additional information, see “Capacities and recommended fuel/lubricants” in the “10. Technical and consumer information” section.

ENGINE OIL RECOMMENDATION:

- API Certification Mark
- API grade SG/SH, Energy Conserving II or API grade SJ, Energy Conserving
- ILSAC grade GF-II
- SAE 5W-30 viscosity oil is preferred for all ambient temperatures.

See “Capacities and recommended fuel/lubricants” in the “10. Technical and consumer information” section for engine oil and oil filter recommendation.

COLD TIRE PRESSURES:

See tire placard located on the front face of the rear left wheel housing inside the vehicle.

NEW VEHICLE BREAK-IN PROCEDURES RECOMMENDATION:

During the first 1,000 miles (1,600 km) of vehicle use, follow the recommendations outlined in the “Break-in schedule” in the “5. Starting and driving” section. Follow these recommendations for the future reliability and economy of your new vehicle. Failure to follow these recommendations may result in vehicle damage or shortened engine life.

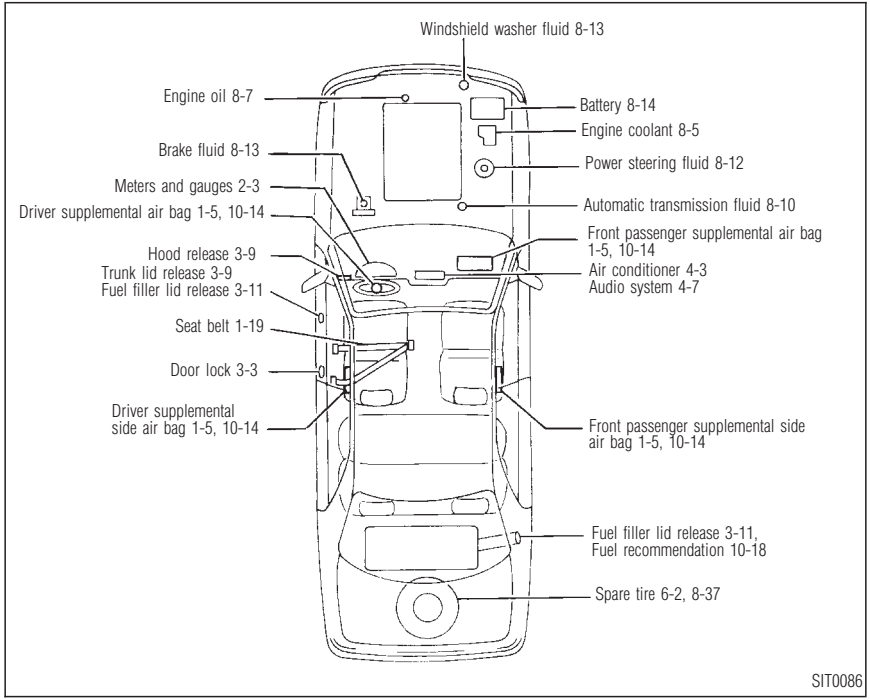
Windshield washer fluid 8-13
Engine oil 8-7
Battery 8-14
Engine coolant 8-5
Brake fluid 8-13
Power steering fluid 8-12
Meters and gauges 2-3
Automatic transmission fluid 8-10
Driver supplemental air bag 1-5, 10-14
Front passenger supplemental air bag 1-5, 10-14
Hood release 3-9
Trunk lid release 3-9
Fuel filler lid release 3-11
Air conditioner 4-3
Audio system 4-7
Seat belt 1-19
Door lock 3-3
Driver supplemental side air bag 1-5, 10-14
Front passenger supplemental side air bag 1-5, 10-14
Fuel filler lid release 3-11, Fuel recommendation 10-18
Spare tire 6-2, 8-37
SIT0086