Model: 95B **Model life 2014>>**

ORDER-INFO
PET CONTAINS THE ORDERING DETAILS FOR ALL MODELS SHOWN IN THE MODEL OVERVIEW.
THE UPDATE SERVICE IS PERFORMED AUTOMATICALLY VIA INTERNET UPDATE.
THE VERSION IS SHOWN IN THE HEADER AS "UPDATE 123/12"

SEATS AND RELATED ITEMS FOR MODELS INTRODUCED BEFORE 1997 ARE SHOWN IN THE STZ CATALOGUE.
SEATS AND RELATED ITEMS FOR MODELS INTRODUCED AFTER 1997 ARE SHOWN IN THE CORRESPONDING VEHICLE CATALOGUES.

ALL ILLUSTRATIONS ARE NON-BINDING.
SUBJECT TO CHANGE.

Model: 95B **Model life 2014>>**

EXPLANAT.- VIN

EXPLANATION OF THE ABRIDGED VERSION OF THE VEHICLE IDENT. NUMBERS (VIN)
USED IN THE CATALOGUE

```
 DIGIT:                1 2 3  4 5 6  7 8  9  10  11  12  13 14 15 16 17

 EXAMPLE:              W P 0  Z Z Z  9 9  Z   5   S   7   0  0  1  2  5
                                      ===      =   =   =   =============
                                       !       !   !   !         !
VEHICLE TYPE 1ST+2ND DIGIT----------------+    !   !   !         !
                                               !   !   !         !
MODEL YEAR----------------------------------------+   !         !
                                                   !   !         !
MANUFACTURING LOCATION--------------------------------+   !         !
                                                       !         !
VEHICLE TYPE 3RD DIGIT-------------------------------------+         !
                                                                   !
SERIAL NUMBER-------------------------------------------------------+
```

Model: 95B **Model life 2014>>**

SUMMARY TYPES

VEHICLE TYPE	MY	VIN	ENGINE TYPE	
MACAN S TDI	14 E	95ELB 70061>90000	3 Mot	
MACAN S	14 E	95ELB 50061>70000	MCT.MA	250 KW
MACAN S (USA,CDN)	14 E	A5ELB 50061>70000	MCT.MA	250 KW
MACAN Turbo	14 E	95ELB 90061>99999	MCT.LA	294 KW
MACAN Turbo (USA,CDN)	14 E	A5ELB 90061>99999	MCT.LA	294 KW
MACAN (CN)	15 F	95FLB 00061>32000	MCN.CC	174 KW
MACAN S TDI	15 F	95FLB 75061>90000	3 Mot	
MACAN S TDI	15 F	95FLB 32061>41000	3 Mot	
MACAN S TDI (USA,CDN)	15 F	A5FLB 32061>41000	3 Mot	
MACAN S TDI (USA,CDN)	15 F	A5FLB 75061>90000	3 Mot	
MACAN S	15 F	95FLB 50061>75000	MCT.MA	250 KW
MACAN S	15 F	95FLB 41061>47000	MCT.MA	250 KW
MACAN S (USA,CDN)	15 F	A5FLB 50061>75000	MCT.MA	250 KW
MACAN S (USA,CDN)	15 F	A5FLB 41061>47000	MCT.MA	250 KW
MACAN Turbo	15 F	95FLB 90061>99999	MCT.LA	294 KW
MACAN Turbo	15 F	95FLB 47061>50000	MCT.LA	294 KW
MACAN Turbo (USA,CDN)	15 F	A5FLB 90061>99999	MCT.LA	294 KW
MACAN Turbo (USA,CDN)	15 F	A5FLB 47061>50000	MCT.LA	294 KW
MACAN	16 G	95GLB 00061>30000	MCN.CC	185 KW
MACAN (USA, CDN)	16 G	A5GLB 00061>30000	MCY.NA	185 KW
MACAN (CN)	16 G	95GLB 00061>30000	MCN.CC	185 KW
MACAN S	16 G	95GLB 40061>60000	MCT.MA	250 KW
MACAN S (USA,CDN)	16 G	A5GLB 40061>60000	MCT.MA	250 KW
MACAN S (CN)	16 G	95GLB 40061>60000	MCT.MA	250 KW
MACAN S TDI	16 G	95GLB 60061>75000	5 Mot	
MACAN S TDI (USA,CDN)	16 G	A5GLB 60061>75000	5 Mot	
MACAN S TDI (CN)	16 G	95GLB 60061>75000	5 Mot	
MACAN Turbo	16 G	95GLB 90061>99999	MCT.LA	294 KW
MACAN Turbo (USA,CDN)	16 G	A5GLB 90061>99999	MCT.LA	294 KW
MACAN Turbo (CN)	16 G	95GLB 90061>99999	MCT.LA	294 KW
MACAN	17 H	95HLB 00061>20000	MCN.CC	185 KW
MACAN (USA, CDN)	17 H	A5HLB 00061>10000	MCY.NA	185 KW
MACAN (CN)	17 H	95HLB 00061>50000	MCN.CC	185 KW
MACAN S	17 H	95HLB 20061>30000	MCT.MA	250 KW
MACAN S (USA,CDN)	17 H	A5HLB 10061>30000	MCT.MA	250 KW
MACAN S (CN)	17 H	95HLB 50061>70000	MCT.MA	250 KW
MACAN S TDI	17 H	95HLB 30061>60000	5 Mot	
MACAN S TDI (USA,CDN)	17 H	A5HLB 30061>50000	5 Mot	
MACAN S TDI (CN)	17 H	95HLB 70061>80000	MCT.MA	250 KW
MACAN Turbo /Kit	17 H	95HLB 70061>80000	MCT.LA	294 KW
MACAN Turbo /Kit (USA,CDN)	17 H	A5HLB 90061>99999	MCT.LA	294 KW
MACAN Turbo /Kit (CN)	17 H	95HLB 70061>80000	MCT.LA	294 KW
Macan GTS	17 H	95HLB 60061>70000	MDC.NA	265 KW
Macan GTS (USA,CDN)	17 H	A5HLB 50061>60000	MDC.NA	265 KW
Macan GTS (CN)	17 H	95HLB 80061>90000	MDC.NA	265 KW

Model: 95B **Model life 2014>>**

EXPL.ENGINE-NO.

```
EXPLANATION OF THE MOTOR-NUMBERS USED IN THE CATALOGUE
======================================================


DIGIT:                                          1 2 3   4 5 6 7 8

EXAMPLE:                                        6 9 5   0 0 1 3 6
                                                = = =   =========
                                                ! ! !       !
ENGINE TYPE (6 = 6-CYL.-ENGINE)-----------------+ ! !       !
FROM MY-09 POWER KIT (S) OTHERWISE (_)-----------+ ! !       !
                                                   ! !       !
ENGINE VERSION-------------------------------------+ !       !
FROM MY-09 CONUNTRY VERSION (T=Taiwan) OTHERWISE(_)+ !       !
                                                     !       !
MODEL YEAR-----------------------------------------+       !
                                                           !
SERIAL NUMBER-----------------------------------------------+
```

Model: 95B **Model life 2014>>**

SUMMARY ENGINES

VEHICLE TYPE	ENGINE TYPE	MY	ENGINE NO.	TECHNICAL DATA
MACAN V6 TDI	MCD.UD	14 E	CDU 0001>999999	6ZYL/3,0L /180 KW
MACAN V6 TDI	MCT.BA	14 E	CTB 0001>999999	6ZYL/3,0L /190 KW
MACAN V6 TDI	MCT.BB	14 E	CTB 0001>999999	6ZYL/3,0L /155 KW
MACAN V6 TDI	MCT.BC	14 E	CTB 0001>999999	6ZYL/3,0L /184 KW
MACAN Turbo	MCT.LA	14 E	CTL 0001>999999	6ZYL/3,6L /294 KW
MACAN S	MCT.MA	14 E	CTM 0001>999999	6ZYL/3,0L /250 KW
MACAN V6 TDI	MCD.UD	15 F	CDU 0001>999999	6ZYL/3,0L /180 KW
MACAN V6 TDI	MCT.BA	15 F	CTB 0001>999999	6ZYL/3,0L /190 KW
MACAN V6 TDI	MCT.BB	15 F	CTB 0001>999999	6ZYL/3,0L /155 KW
MACAN V6 TDI	MCT.BC	15 F	CTB 0001>999999	6ZYL/3,0L /184 KW
MACAN Turbo	MCT.LA	15 F	CTL 0001>999999	6ZYL/3,6L /294 KW
MACAN S	MCT.MA	15 F	CTM 0001>999999	6ZYL/3,0L /250 KW
MACAN	MCN.CC	15 F	CNC 0001>999999	4ZYL/2,0L /174 KW
Macan(C33)	MCN.C	15 F	CNC 0001>999999	4ZYL/2,0L /174 KW
MACAN C39 (KOR)	MCY.NA	15 F	CYN 0001>999999	4ZYL/2,0L /174 KW
MACAN V6 TDI	MCD.UD	16 G	CDU 0001>999999	6ZYL/3,0L /180 KW
MACAN V6 TDI	MCT.BA	16 G	CTB 0001>999999	6ZYL/3,0L /190 KW
MACAN V6 TDI	MCT.BB	16 G	CTB 0001>999999	6ZYL/3,0L /155 KW
MACAN V6 TDI	MCT.BC	16 G	CTB 0001>999999	6ZYL/3,0L /184 KW
MACAN V6 TDI	MCN.RB	16 G	CNR 0001>999999	6ZYL/3,0L /176 KW
MACAN Turbo	MCT.LA	16 G	CTL 0001>999999	6ZYL/3,6L /294 KW
MACAN S	MCT.MA	16 G	CTM 0001>999999	6ZYL/3,0L /250 KW
MACAN	MCN.CC	16 G	CNC 0001>999999	4ZYL/2,0L /174 KW
Macan (C33)	MCN.C	16 G	CNC 0001>999999	4ZYL/2,0L /174 KW
MACAN C39 (KOR)	MCY.NA	16 G	CYN 0001>999999	4ZYL/2,0L /174 KW
Macan V6 TDI BIN5	MCP.NB	16 G	CPN 0001>999999	6ZYL/3,0L /176 KW
Macan R4 TFSI (USA)	MCY.NB	16 G	CYN 0001>999999	4ZYL/2,0L /185 KW
Macan R4 TFSI	MCY.PA	16 G	CYP 0001>999999	4ZYL/2,0L /185 KW
MACAN BI-Turbo GTS	MDC.NA	16 G	DCN 0001>999999	6ZYL/3,0L /265 KW
MACAN V6 TDI	MCD.UD	17 H	CDU 0001>999999	6ZYL/3,0L /180 KW
MACAN V6 TDI	MCT.BA	17 H	CTB 0001>999999	6ZYL/3,0L /190 KW
MACAN V6 TDI	MCT.BB	17 H	CTB 0001>999999	6ZYL/3,0L /155 KW
MACAN V6 TDI	MCT.BC	17 H	CTB 0001>999999	6ZYL/3,0L /184 KW
MACAN V6 TDI	MCN.RB	17 H	CNR 0001>999999	6ZYL/3,0L /176 KW
MACAN Turbo	MCT.LA	17 H	CTL 0001>999999	6ZYL/3,6L /294 KW
MACAN S	MCT.MA	17 H	CTM 0001>999999	6ZYL/3,0L /250 KW
MACAN	MCN.CC	17 H	CNC 0001>999999	4ZYL/2,0L /174 KW
Macan (C33)	MCN.C	17 H	CNC 0001>999999	4ZYL/2,0L /174 KW
MACAN C39 (KOR)	MCY.NA	17 H	CYN 0001>999999	4ZYL/2,0L /174 KW
Macan V6 TDI BIN5	MCP.NB	17 H	CPN 0001>999999	6ZYL/3,0L /176 KW
Macan R4 TFSI (USA)	MCY.NB	17 H	CYN 0001>999999	4ZYL/2,0L /185 KW
Macan R4 TFSI	MCY.PA	17 H	CYP 0001>999999	4ZYL/2,0L /185 KW
MACAN BI-Turbo GTS	MDC.NA	17 H	DCN 0001>999999	6ZYL/3,0L /265 KW

Model: 95B **Model life 2014>>**

EXPL.TRANSM.NO.

```
EXPLANATION OF THE TRANSMISSION-NUMBERS USED IN THE CATALOGUE
=============================================================

DIGIT:                          1  2  3  4  5     6  7  8  9 10 11

EXAMPLE:                        G  9  7  0  1     1  0  0  5  4  3
                                =  ==========     =  =============
                                !      !          !        !
                                !      !          !        !
TRANSMISSION TYPE---------------+      !          !        !
                                       !          !        !
TRANSMISSION VERSION--------------------+         !        !
                                                  !        !
INDEX OF VARIANTS-----------------------------------+        !
                                                           !
SERIAL NUMBER-----------------------------------------------+
```

Model: 95B **Model life 2014>>**

SUMM.TRANSMISS.

VEHICLE TYPE	TRANSM. TYPE	MY	TRANSMISSION NO.	TECHNICAL DATA
MACAN S V6 TDI	A5B.00	14 E	A5B00 1 002001>999999	7-GANG
MACAN Turbo 3,6L	A5B.01	14 E	A5B01 1 002001>999999	7-GANG
MACAN S 3,0L	A5B.02	14 E	A5B02 1 002001>999999	7-GANG
MACAN S V6 TDI	A5B.00	15 F	A5B00 1 002001>999999	7-GANG
MACAN Turbo 3,6L	A5B.01	15 F	A5B01 1 002001>999999	7-GANG
MACAN S 3,0L	A5B.02	15 F	A5B02 1 002001>999999	7-GANG
MACAN TFSI	A5B.03	15 F	A5B03 1 002001>999999	7-GANG
MACAN TDI	A5B.04	15 F	A5B04 1 002001>999999	7-GANG
MACAN S V6 TDI	A5B.00	16 G	A5B00 1 002001>999999	7-GANG
MACAN Turbo 3,6L	A5B.01	16 G	A5B01 1 002001>999999	7-GANG
MACAN S 3,0L	A5B.02	16 G	A5B02 1 002001>999999	7-GANG
MACAN TFSI	A5B.03	16 G	A5B03 1 002001>999999	7-GANG
MACAN TDI	A5B.04	16 G	A5B04 1 002001>999999	7-GANG
MACAN S V6 TDI	A5B.00	17 H	A5B00 1 002001>999999	7-GANG
MACAN Turbo 3,6L	A5B.01	17 H	A5B01 1 002001>999999	7-GANG
MACAN S 3,0L BT LP	A5B.02	17 H	A5B02 1 002001>999999	7-GANG
MACAN TFSI	A5B.03	17 H	A5B03 1 002001>999999	7-GANG
MACAN TDI	A5B.04	17 H	A5B04 1 002001>999999	7-GANG

Model: 95B **Model life 2014>>**

LEGENDS/NOTICES

```
                    LEGENDS AND NOTICES
                    ===================

                    IN COLUMN -S- STATUS
                    --------------------

          N         NEW ADDITION

          P         PART ALREADY IN PROGRAMME, BUT NEW
                    AT THIS APPLICATION

          W         DELETED AT THIS APPLICATION, BUT CONTINUED TO BE CARRIED

          K         RACING PART: MARKETED FROM WEISSACH EMW

          A         STOCK TO BE USED UP

          U         DELETED WITHOUT REPLACEMENT

          *         PART ALSO OR ONLY AVAILABLE
                    IN REPAIR KIT

          >         ALSO AVAILABLE IN EXCHANGE


                    IN COLUMN - ILL. -
                    ------------------

          1         IDENTIFICATION NO. IN ILLUSTRATION

         (1)        PART ONLY SIMILAR AS ILLUSTRATED

          -         PART IS NOT ILLUSTRATED

                    FIG.-NUMBERS FOR WHICH THERE IS SHOWN NO TEXT ARE
                    NOT VALID FOR THIS EDITION OF CATALOGUE


                    IN COLUMN -PART NUMBER/CODE-
                    ----------------------------

000 000 000 00      PART NUMBER EQUALS ORDERING NO., IF A CODE IS
                    SHOWN, IT WILL HAVE TO BE PART OF ORDERING
                    NUMBER

              01C   COLOUR CODE

                    IN COLUMN -TEXT
                    ---------------

                    INSTALLATION WITH ENGINE OR CHASSIS
                    NUMBER-RANGE

                                EXAMPLE:

M 66W 00389>>                   FROM ENGINE NO.
```

Model: 95B **Model life 2014>>**

F >>99WS6 00889 UP TO CHASSIS NO.

Model: 95B **Model life 2014>>**

LEGENDS/NOTICES

```
                  IN COLUMN   - QU -   = NO. OF PIECES
                  -------------------------------------

         1        NUMBER PER APPLICATION

         X        NUMBER AS NEEDED

         *        AVAILABLE ONLY IN RUNNING LENGTHS   1 = 1 METRE


                  IN COLUMN   - MODEL/SYMBOL -
                  ----------------------------

        I650      OPTIONAL EQUIPMENT  -  SEE I-NO. LIST
       -I650      COMPONENT NOT VALID FOR THIS I-NO.

        -98       LIMITATION OF MODEL YEAR FOR INSTANCE: VALID UP TO
                  END OF MODEL YEAR 1997

       /LL        LHD

       /RL        RHD
                  ---------+
       /V         FRONT    I
                           I
       /H         REAR     I
                           I---> APPLIES TO
       /L         LEFT     I     DIRECTION OF TRAVEL
                           I
       /R         RIGHT    I
                  ---------+

       WW         THE PART CAN BE USED INSTEAD OF THE
                  PRECEDING ONE.
```

Model: 95B **Model life 2014>>**

COUNTRY-EQIPM.

EQUIPMENT BY COUNTRY REGULATIONS
==========

(A)	AUSTRIA
(AG)	ARABIAN GULF STATES
(AUS)	AUSTRALIA
(B)	BELGIUM
(BR)	BRAZIL
(CDN)	CANADA
(CH)	SWITZERLAND
(CN)	PEOPLE'S REPUBLIC OF CHINA
(D)	FEDERAL REPUBLIC OF GERMANY
(DK)	DENMARK
(E)	SPAIN
(F)	FRANCE
(GB)	GREAT BRITAIN
(GR)	GREECE
(HK)	HONGKONG
(I)	ITALY
(J)	JAPAN
(L)	LUXEMBURG
(N)	NORWAY
(NL)	NETHERLANDS
(NZ)	NEW ZEALAND
(P)	PORTUGAL
(ROK)	KOREA
(RC)	TAIWAN
(THA)	THAILAND
(S)	SWEDEN
(SA)	SAUDI ARABIA
(SF)	FINLAND
(USA)	UNITED STATES OF AMERICA

Model: 95B **Model life 2014>>**

(ZA) SOUTH AFRICA

Optional Equipment

PORSCHE

Model: 95B **Model life** 2014>>

NR	Description
IB0A	Component set without country assignment
IB0D	Component set for USA
IB0E	Component set for Canada
IB0L	Component set for Japan
IB0M	Component set for AGCC countries
IB0N	Component set for Great Britain
IB0R	Component set for Australia
IB1C	Component set for Mexico
IB1D	Component set for Brazil
IB1P	Component set for China
IB2A	Component set PAP LHD
IB2G	Component set for Thailand
IB2H	Component set for Korea
IB3D	Component set for Turkey
ICY3	RS Spyder Design wheel, 20"
ICY4	Cayenne Sport Techno wheel 9"/10" x 20" in vehicle colour
IC5F	18" Macan S wheel (8/9X18)
IC6P	19" Macan Turbo wheel (8/9X19)
IC6X	19" Macan Design wheel (8/9X19)
IC7N	18" Macan wheel (8/9X18)
IC7T	21" 911 Turbo Design wheel (9/10X21)
IC9K	21" Sport Classic wheel (9/10X21)
IDD7	6-cylinder diesel engine 3.0 l/190 kW TDI
IDE5	4-cylinder diesel engine 2.0 l/140 kW TDI
IDM0	4-cylinder TFSI engine 2.0 l/174 kW
IDQ5	*
IDU0	6-cylinder turbo engine 3.0 l/250 kW
IDU1	6-cylinder turbo engine 3.6 l/294 kW
IDU2	6-cylinder turbo engine, 3.6 l 309 kW
IDU3	3.6 litre turbo engine, 6-cylinder
ID1V	6-cylinder diesel engine 3.0/155 kW TDI
ID11	6-cylinder petrol engine 3.0/245 kW
ID4A	Turbo engine, 6 cyl. 3.0 l/265 KW
ID43	6-cylinder diesel engine 3.0 l/180 kW TDI
ID50	6-cylinder diesel engine, 3.0 l/176 kW TDI
ID51	6-Zylinder-Dieselmotor 3,0 L/184 KW TDI
IER1	Region code "ECE" for radio
IER2	Region code "RoW" for radio
IER3	Region code "USA" for radio
IER4	Region code "Mexico/NAR2" for radio
IER5	Region code Japan for radio
IER6	Region code "China" for radio
IER7	Region code "Korea" for radio
IER8	Region code "Taiwan" for radio
IER9	Region code "Rest of ASIA" for radio
IE0W	Cayenne GTS special model

Model: 95B **Model life 2014>>**

NR	Description
IGY0	Without electric closing aid for tailgate
IGY1	Power closing mechanism for tailgate
IG1D	7-speed automatic transmission for all-wheel drive
IG1G	8-speed auto. transmission for all-wheel drive
IH3L	Tyres 235/60 R18, 255/55 R18
IH3Q	All-season tyres 235/60 R18, 255/55 R18
IH6B	Tyres 235/55 R19, 255/50 R19
IH6J	All-season tyres 235/55 R19, 255/50 R19
IH6K	Tyres 265/45 R20, 295/40 R20
IH6N	All-season tyres 265/45 R20, 295/40 R20
IH6P	Tyres 265/40 R21, 295/35 R21
IIY1	Model year period from week 22 to week 45
IIY2	Model year period from week 45 to week 22
II8L	Premium radio (2nd gen.)
IJ0B	Battery (92 Ah)Battery (92 Ah)
IJ0P	Battery (105 Ah)
IJ1N	Battery (75 Ah)
IKK1	Refrigerant R134A
IKK3	Refrigerant R1234YF
IL0L	Left-hand drive version
IL0R	Right-hand drive version
INOQ	Seat covers, full leather, smooth, for A/C seat
INZ3	*
IN0Q	Seat covers in leather, smooth-finish for A/C seats
IN1A	Seat covers in natural leather for A/C seats
IN1B	Seat covers in full leather, two-colour with air conditioning
IN1M	Two-colour seat covers in partial leather, smooth-finish
IN1P	Seat covers in partial leather (natural leather, smooth-finish)
IN2S	Seat covers in partial leather ALCANTARA
IN4M	Seat covers, partial leather, leather/leatherette
IN5U	Part-leather seat covers, smooth leather
IN6D	Seat covers, Alcantara/leatherette
IQE0	W/o storage comp. package / box
IQE1	Storage comp. package
IQH0	without voice control
IQH1	Voice control system
IQJ2	Aluminium package
IQJ4	Aluminium package, Black
IQJ6	Aluminium package, Black Matt
IQR0	without compass
IQR1	With compass
IQR3	Analogue clock on dashboard
IQR4	Sport Chrono package
IQR5	Sport Chrono Package Plus
IQU0	Digital radio reception (DAB)

Model: 95B **Model life 2014>>**

NR	Description
IQU1	TV reception + digital radio reception (DAB) MIB
IQU8	SAT radio reception, USA
IQV0	Without TV and digital radio reception
IQV1	With TV reception
IQV3	HD radio reception (high-definition)
IQV4	XM satellite radio receiver
IQV5	TV reception and digital radio reception (DAB)
IQV8	HD radio reception and SAT radio XM (SDARS)
IQ1G	Standard seats (front), 8-way
IQ1J	GTS sports seats front and rear
IQ2J	Comfort seats, front
IQ4P	Sports seat GTS 8-way
IUF1	Multimedia socket for external source
IUI4	*
IUP1	Sport Chrono / compass, Black
IUP3	Sport Chrono / compass, White
IUP4	Sport Chrono / compass, Luxor Beige
IUP5	Sport Chrono / compass, Garnet Red
IUX6	TPM valve, Silver
IUX7	TPM valve, Black
IU5A	Instrument insert, km/h indication, RoW
IU5B	Instrument insert, mph indication, GB
IU5C	Instrument insert, mph indication, USA
IU5D	Instrument insert, km/h indication, Canada
IU5E	Instrument insert, km/h indication, Japan
IU5F	Instrument insert, display km/h, AGCC
IU5G	Instrument insert, km/h indication, Australia
IVC0	Without garage door opener
IVC1	Garage door opener, 433 MHz
IVC2	Garage door opener, 315 MHz
IVR0	Without anti-ram protection measures
IVR1	Side protection, running board
IVR4	Front impact protection measures
IVT2	Door entry guards, aluminium, illuminated
IVW1	Privacy glazing
IVW5	Insulating glass in rearInsulating glass in rear
IV39	21" Sport Classic wheel in exterior colour
IV95	21" Sport Classic wheel in Black
IV96	21" Sport Classic wheel in platinum
I0F5	Diesel fuel system
I0GG	Emissions compliance EU 4
I0JA	Weight class 1, front axle - 1170-1210 kg
I0JB	Weight class 2, front axle - 1211-1226 kg
I0JC	Weight class 3, front axle - 1227-1251 kg
I0JD	Weight class 4, front axle - 1252-1276 kg
I0JE	Weight class 5, front axle - 1277-1292 kg

Model: 95B **Model life** 2014>>

NR	Description
I0JF	Weight class 6, front axle - 1293-1328 kg
I0JG	Weight class 7, front axle - 1329-1428 kg
I0JH	Weight class 8, front axle
I0JJ	Weight class 9, front axle
I0JK	Weight class 10, front axle
I0K0	Without alternative drive system
I0K1	Hybrid drive system
I0M2	Fuel tank, 75 l
I0M5	Fuel tank, 60 litre
I0M6	Fuel tank, 65 litre
I0NA	Deletion of model designation
I0NB	Logo set in basic version
I0P0	Standard tailpipe
I0P3	Exhaust tailpipe, polished
I0P6	Exhaust tailpipe, Black
I0P8	Sports exhaust system
I0P9	Sports exhaust system, Black tailpipe
I0RC	With electric steering column lock
I0RZ	Without electric steering column lock
I0YA	Weight class 1, rear axle - 1039-1074 kg
I0YB	Weight class 2, rear axle - 1075-1128 kg
I0YC	Weight class 3, rear axle - 1129-1159 kg
I0YD	Weight class 4, rear axle - 1160-1215 kg
I0YE	Weight class 5, rear axle - 1216-1244 kg
I0YF	Weight class 6, rear axle - 1245-1299 kg
I0YG	Weight class 7, rear axle - 1300-1331 kg
I0YH	Weight class 8, rear axle
I0YJ	Weight class 9, RA
I089	Exterior package, Black
I1A2	Engine variant without reduced compression
I1BA	Suspension/dampers, standard
I1BH	Suspension/dampers, standard 2 PASM
I1BK	Air suspension with levelling system and height adjustment (PASM)
I1BW	Comfort suspension/damping (steel springs)
I1D0	Without towball
I1D3	Trailer hitch, electrically retractable, ECE R55
I1D6	Trailer coupling without tow ball
I1D7	Preparation for detachable trailer coupling
I1D8	Preparation for detachable trailer coupling "usa"
I1E0	Without carbon canister
I1E1	Carbon canister
I1E9	without carbon canister with SCR

Model: 95B **Model life 2014>>**

NR	Description
I1G1	18-inch collapsible spare wheel
I1G4	19" collapsible spare wheel
I1G8	Tire Fit, tyre repair set
I1KD	Rear disc brakes, 17-inch disc diameter, brake calliper painted Black
I1KE	Rear disc brakes, 17-inch disc diameter, brake calliper painted Silver
I1KY	Disc brakes, rear, 17", Red
I1LA	Front disc brakes, 17-inch disc diameter, brake calliper painted Black
I1LB	Front disc brakes, 18-inch disc diameter, brake calliper painted Silver
I1LE	Front disc brakes, 17-inch disc diameter, brake calliper painted Black
I1LF	Front disc brakes, 18-inch disc diameter, brake calliper painted Silver
I1LG	Front disc brakes, 18-inch disc diameter, brake calliper painted Red
I1LY	Front disc brake - 19-inch disc diameter, brake calliper painted Yellow (PCCB)
I1L0	Normal air cleaner
I1L1	Air cleaner for dusty countries
I1NE	Wheel centres STANDARD
I1NP	Wheel centres with full-colour Porsche Crest (concave)
I1PC	Wheel bolts with theft protection
I1T3	First aid kit, warning triangle
I1T7	First aid kit, 2 warning triangles
I1XA	Multi-function steering wheel, Anthracite Birch, heated
I1XE	3-spoke multi-function steering wheel, wood, Anthracite Birch with radio controls
I1XG	Multi-function steering wheel, American Walnut, Brown, heated
I1Y0	Ohne Vorder- /Hinterachssperre
I1Y1	Differential lock, rear, centre differential lock
I1ZK	Front disc brakes, 18-inch disc diameter, brake calliper painted Red
I2C4	Steering column, reach + height adjustable with memory
I2C5	Steering column, reach + height adjustable, mechanical
I2D0	Without Sport Design package
I2D1	Aerokit, with sill cover
I2D2	Aerokit, without sill cover
I2D4	Sport Design package, exterior colour
I2D5	Sport Design package, Black
I2D6	Sport Design package without door sill, Black

Model: 95B **Model life 2014>>**

NR	Description
I2D7	Rear end painted in body colour
I2D8	Rear end painted High-Gloss Black
I2EH	Rear disc brakes - disc diameter 19 inch Brake calliper painted yellow (PCCB)
I2EK	Rear disc brakes, 18-inch disc diameter, brake calliper painted Red
I2FX	3-spoke multi-function steering wheel, wood, Carbon with radio controls
I2G0	Without insert for filling with diesel
I2G1	Insert for fuelling with unleaded petrol
I2G4	Insert for fuelling with unleaded petrol (CARB Diagnosis)
I2G7	Insert for unleaded fuelling in bad fuel region
I2HB	Interior sound measures (shaker)
I2JB	Bumper, standard
I2JC	Comfort bumper, stainless-steel attachment, front apron bottom section
I2JU	Bumper with on-road front end
I2JX	Comfort bumper (stainless steel trim at front + rear)
I2PX	Multi-function steering wheel, Alcantara, 3–spoke
I2P1	Loading sill guard in plastic
I2P2	Loading sill guard in stainless steel
I2P3	Loading sill guard in carbon
I2W0	Tank cap, standard
I2ZF	3-sp. multi-funct steering wheel, Alcantara, heated
I2ZH	3-spoke multi-function steering wheel, heated
I2ZM	3-spoke multi-function steering wheel
I2ZU	Multi-function steering wheel, Yachting Mahogany, heated
I201	105 Ah battery
I3B9	Isofix child seat anchor system, front and rear
I3CA	Without bulkhead
I3CU	Preparation for net partition
I3CX	Net partition
I3D1	Centre console STANDARD (PVC)
I3D2	Centre console for leather package
I3D3	Centre console, leather package/Alcantara
I3D4	Centre console in natural leather
I3D5	Centre console Alcantara
I3D6	Centre console in two-colour leather
I3D8	Centre console Leather, smooth
I3D9	Centre console, standard, two-colour
I3FA	Without roof insert

Model: 95B **Model life 2014>>**

NR	Description
I3FU	Porsche large roof system
I3GA	without cargo management
I3GN	Variable luggage-compartment floor concept
I3I0	Centre console for leather package, two-colour
I3J4	Head restraints for front seats
I3J7	Headrests for front seats, with embossed crest
I3LD	Door & side trim panel - standard - PAG
I3LE	Door & side trim panel - MEDIUM - PAG
I3LH	Door trim and side wall - all leather -- pillars/ rooflining in Alcantara - PAG
I3LM	Door panel/side trim panel in natural leather
I3LS	Door & side trim panel - Alcantara
I3LT	Door, side trim panel in two-colour natural leather
I3L3	Manual height adjustment for both 8-way adjustable front seats
I3L4	Driver memory package
I3L5	Electrical adjustment for both 12-way adjustable front seats
I3L6	Front seat adjustment, electrical with memory, right
I3PB	Front seat adjustment, left electrical, right manual
I3PE	Front seat adjustment, right electrical, left manual
I3PH	Front seat adjustment, right electrical and memory, left manual
I3PJ	Front seat adjustment, right electrical, left manual
I3PN	12-way electrical adjustment for both front seats + memory
I3QT	3-point automatic seat belts at front with seat-belt pre-tensioners + height adjustment
I3S0	Without roof rails
I3S1	Unpainted roof rails
I3S5	Black roof rails with drip mouldings
I3W4	Acoustic package, standard
I3W8	Acoustic package, diesel
I3X1	Load-through facility with ski bag
I3Y0	without sun blind
I3Y4	Roller blind for rear side windows
I3ZD	3-point automatic seat belt (rear), "NAR"
I3ZU	3-point automatic seat belt (rear), "RoW"
I4AH	Door/side trim panel, leather package/Alcantara
I4AK	Door/side trim panel, leather package, two-colour
I4AP	Door/side trim panel, standard two-colour
I4A0	Without seat heating
I4A3	Heated seats, front

Model: 95B **Model life 2014>>**

NR	Description
I4A4	Heated seats, front/rear
I4D0	without seat ventilation
I4D3	Seat ventilation (front), a/c seat
I4E0	Tailgate release from outside
I4E7	Power closing for rear lid
I4F2	Porsche entry + drive
I4F6	Porsche entry + drive (usa/can)
I4GC	Windscreen in heat-insulating glass, with top tint
I4GF	Windscreen of tinted glass
I4GK	Windscreen, insulating glass with top tint
I4KC	Green heat-insulating glass in rear
I4KF	Dark tinted glass in rear
I4K0	Central-locking system with key remote and interior operation
I4K3	Central locking with remote control, inner release and safe lock system
I4L2	Safety interior mirror, manual dimming function
I4L6	Safety interior mirror, automatic dimming function
I4M0	Without cupholder
I4M3	Rear cup holder
I4N0	Dashboard for leather package, two-colour
I4N1	Padded dashboard
I4N2	Dashboard for leather package
I4N3	Switch panel in two-tone leather w. decor. stitching
I4N5	Dashboard in natural leather
I4N8	Dashboard in genuine leather
I4N9	Upholstered dashboard, two-colour
I4QR	3-point automatic seat belt (front), "NAR"
I4UD	Airbag, can not be deactivated on passenger's side
I4UE	Airbags for driver and front-seat passenger; front-seat passenger side can be deactivated
I4UQ	Advanced airbag
I4X3	Front side airbag with head airbag
I4X4	Front and rear side airbag with head airbag
I41L	RS Spyder Design 20" wheel in Black
I444	Anti-theft lock, wheel bolts "THATCHAM"
I450	Ceramic brake (PCCB)
I46X	*
I5C6	Rear end reinforcement
I5D1	Carrier frequency 433.92 MHz
I5D2	Carrier frequency 315 MHz
I5D3	Carrier frequency 315 MHz with reduced transmission power for Japan
I5D8	Carrier frequency 434 MHZ
I5KA	Rear seats, Comfort (40/20/40)
I5KH	Rear seats, Sport (40/20/40)

Model: 95B **Model life 2014>>**

NR	Description
I5MA	Decorative inlays - paint, painted plastic
I5MH	Carbon decorative inlays
I5MP	Decorative inlays in American Walnut, Brown
I5RP	Right exterior mirror, convex with camera
I5RQ	Door mirror, right, convex
I5RR	Door mirror, right, convex (US)
I5RT	Door mirror, right, convex (AGCC)
I5RV	Door mirror, right, aspherical
I5SG	Door mirror, left, flat
I5SJ	Door mirror, left, convex
I5SL	Door mirror, left, aspherical
I5SU	Left exterior mirror, convex with camera
I5TE	Aluminium "sport" package
I5TH	*
I5TL	Decorative inlay in Piano Look
I5W1	Silver roof rails plus bars
I5W4	Black roof rails plus bars
I5XC	Sun visors, mirror (RoW)
I5XX	Sun visors, mirror (USA)
I5ZD	Headrests, front and rear, with logo
I5ZF	Headrests for front seats, with embossed crest
I583	Smoker package
I6A0	Without fire extinguisher
I6A7	With fire extinguisher
I6DL	Sun visors, mirror (Korea)
I6DQ	Sun visors, mirror (China)
I6EA	Without additional body covers, side stone guards
I6EC	Underbody protection, rear axle
I6ET	Stone guard film, poor road package
I6FB	Door-mirror housing painted in exterior colour
I6FG	Door mirror housing, standard
I6F0	Without imprint on armrest
I6F6	Porsche Crest on front armrest
I6F8	Model logo on front armrest
I6H0	Door design trims, Black (grained)
I6H1	Door design trims, vehicle colour
I6H3	Door design trims, carbon
I6H5	Door design trims in High-Gloss Black
I6H6	Door design trims, black matt
I6KA	Air grille, standard
I6KC	Air grille, High-Gloss Black
I6NA	One-piece rooflining in Alcantara, USA
I6NJ	Standard rooflining, fabric
I6NN	Alcantara rooflining

Model: 95B **Model life 2014>>**

NR	Description
I6NQ	Standard rooflining in fabric, USA
I6Q2	Gear selector knob + grip in leather, gear lever in leather/aluminium
I6Q5	Selector lever, Alcantara
I6W1	Number-plate holder, front, large (ECE)
I6W2	Number-plate holder, front, small (RoW)
I6W3	Number-plate holder, front (NAR)
I6W4	Front number plate bracket, Japan
I6W7	Number plate bracket, front, China
I6XP	Door mirrors, electrically retractable, electrically adjustable, separately heated
I6XQ	Exterior mirror with memory function, electr. retractable/adjustable, separately heated
I6XT	Door mirrors, automatically dimmable, electrically rectractable/adjustable, separately heated + memory
I6XW	Door mirrors, automatically dimmable, electrically retractable/adjustable, separately heated
I6Y2	Comfort air pressure, 270 km/h
I6Y4	Comfort air pressure, 100 mph
I6Y7	Comfort air pressure, 100 mph USA
I602	LED headlights with dynamic cornering light Plus (PDLS Plus)
I608	Garage door opener "Homelink" 433 MHz
I619	Mobile phone preparation (BLUETOOTH) without console
I642	Start/Stop function
I666	PCM 3 telephone (GSM)
I671	Voice control system
I675	Without radio preparation (Japan navigation system)
I680	BOSE sound package
I7AA	Electronic immobiliser
I7AB	Engine immobiliser, alarm system, alarm horn
I7AC	Alarm system, interior surveillance, alarm horn
I7AH	Alarm system, interior surveillance can be deactivated Backup horn
I7AK	Alarm system, interior surveillance system, anti-towing protection
I7AL	Alarm system, interior surveillance system, backup horn, anti-towing protection
I7A0	Without CD autochanger/player
I7D7	Integrated CD/DVD autochanger
I7E0	Without heat accumulator
I7E6	Auxiliary heater
I7F4	PDK selector lever, aluminium, Exclusive design
I7GB	Emissions concept, ULEV 2
I7GH	EU4 emissions concept without EOBD

Model: 95B **Model life 2014>>**

NR	Description
I7G5	Preparation, VTS (Vehicle Tracking System), with driver card, connection to alarm system, re-start inhibitor
I7G9	VTS preparation and Porsche Car Connect (pcc)
I7HI	Emissions concept EU5 Russia
I7I0	VTS security package (incl. PCC) and keypad
I7I2	VTS security package (with PCC)
I7K0	Without Tire Pressure Monitoring (TPM)
I7K3	Tire Pressure Monitoring, 433 MHz
I7K4	Tyre pressure monitoring system 315 MHz
I7L4	Start/Stop "last mode" with recuperation
I7L7	StopRecuperation without Start/Stop
I7L8	Start/Stop "default on" mit Rekuperation
I7MG	Emissions concept EU 5
I7MJ	Emissions concept EU 5J
I7MM	Emissions concept EU6 Plus
I7M0	Door entry guards of plastic from MY 04
I7M4	Preparation for CT door entry guards, illuminated
I7M8	Door entry guards, carbon, illuminated
I7M9	Door entry guards in aluminium
I7Q0	Without navigation unit
I7Q4	Navigation system preparation, Japan
I7Q7	PCM incl. navigation & compass display in instrument cluster
I7RG	Navigation China
I7RH	Navigation Middle East
I7RJ	Navigation Australia
I7RM	Navigation Hong Kong
I7RS	Navigation North America
I7RT	Navigation package Europe
I7RV	Navigation Russia
I7RX	Navigation South Africa
I7TK	Decorative inlays, White Oak
I7T1	Offroad navigation, with course calculator showing latitude and longitude
I7T4	Navigation module China
I7UG	Navigation device, High
I7V0	Instrument dials in Black
I7V3	Instrument dials in White
I7V4	Instrument dials in Luxor Beige
I7V5	Instrument dials in Silver
I7V6	Instrument dials in Black/Silver
I7V7	Instrument dials, Garnet Red

Model: 95B **Model life 2014>>**

NR	Description
I7V8	Instrument dials in Carmine Red
I7X0	Without ParkAssist
I7X2	ParkAssist, front/rear
I7X8	Ultrasound parking aid and reversing camera
I7X9	Reversing camera
I7Y0	Without Lane Change Assist
I7Y1	Lane Change Assist
I7Y2	Lane Departure Warning
I7Y3	Lane Change Assist and Lane Departure Warning
I7Y6	Lane departure warning (LDW)
I7Y7	Lane Change Assist and Lane departure warning
I77J	Navigation software Argentina
I77K	Navigation software Chile
I8A4	Ultrasound parking aid with Real Topview
I8BB	Halogen main headlights, right-hand traffic
I8BC	Main headlights with gas-discharge lamps + direction indicators, XENON, right-hand traffic
I8BE	Main headlight with gas-discharge lamp & direction indicator light, XENON, left-hand traffic
I8BF	Halogen main headlight, left-hand traffic
I8BR	Halogen main headlights, U.S. version with direction indicator and running lights, right-hand traffic
I8BZ	Main headlights with gas-discharge lamps + direction indicators, XENON, left-hand traffic
I8DQ	Basic radio/PCM terminal, USA, double-DIN colour display
I8DV	Basic radio/PCM terminal, RoW, double-DIN colour display
I8EA	Xenon USA, right-hand traffic
I8EE	Xenon, ECE, left-hand traffic (Black)
I8EF	Xenon, ECE, right-hand traffic (Black)
I8EG	Xenon, USA, right-hand traffic (Black)
I8EX	LED headlights, r-h traffic + dyn. cornering light
I8EY	LED headlights, USA with dynamic cornering light
I8F2	Side direction indicator lights
I8F5	Side marker lights and direction indicators
I8G0	without High beam assist
I8G1	PDLS+ High beam assist
I8G2	Dynamic high beam PDLS+
I8IS	LED headlights, l-h traffic + dyn. cornering light
I8JD	Main headlights with gas-discharge lamps U.S. version, XENON RHD
I8JE	Main headlight with gas-discharge lamp ECE, XENON, right-hand traffic.

Model: 95B **Model life 2014>>**

NR	Description
I8JG	Main headlight with gas discharge lamp ECE, XENON, right-hand traffic with black interior lining
I8N7	Windscreen washer interval Light and rain sensor
I8N8	Windscreen washer interval Light sensor
I8Q2	Static headlight beam adjustment
I8Q3	Headlight levelling - dynamic
I8RV	10 loudspeakers, passive
I8SA	side tail light standard design
I8SB	side tail light standard design, Black
I8SI	side tail light (USA, Canada), Black
I8SJ	side tail light (USA, Canada)
I8T0	Without cruise control
I8T1	Cruise control
I8T3	Automatic distance control + cruise control ACC from MY 04
I8T6	Cruise control with speed limiter
I8WB	Fog lights
I8WH	Street junction light and fog lights
I8X0	Without headlight washer system
I8X1	Headlight cleaning system
I8YZ	Without radio but with preparation for 10 loudspeeakers
I8Y1	Standard horns
I8Y2	Horns for extreme driving situations
I890	Folding table, left
I9AD	Climatronic, free of CFCs
I9AQ	3-zone Climatronic
I9G1	220 A generator
I9JA	Non-smoker package
I9JB	Smoker version; ashtrays at front and rear
I9MA	Interior lighting in basic equipment package
I9MB	Comfort interior lighting, dimmable, with light strips on door panels
I9MO	Without auxiliary heater or engine-indep. heating
I9M0	Without auxiliary/parking heater
I9M1	Auxiliary water heater with timer
I9M9	Auxiliary water heater with timer and remote control
I9NY	Electronic logbook
I9P3	Belt control, visual and acoustic

Model: 95B **Model life 2014>>**

NR	Description
	for driver and passenger
I9P6	Belt control, visual and acoustic (front + rear)
I9P7	Belt control, visual and acoustic
	only for driver
I9Q1	Without traffic sign recognition
I9Q6	Traffic sign recognition
I9TF	Courtesy entry and exit lights
I9TH	Safety lights on front and rear doors
I9VJ	Top Premium sound systemTop Premium sound system
I9VK	Sound package 1/sound package
I9VL	Sound package 2/High-end sound system
I9WM	Preparation for "Rear Seat Entertainment"
I9W0	Without preparation for installation of car phone
I9W1	Telephone module without passive handset
I9W5	BLUETOOTH mobile phone preparation
I9ZC	Telephone module with connection box
I9ZE	Mobile-phone preparation with connection box
I9ZK	Telephone module
I9ZP	Telephone module with passive handset
I9ZX	Mobile phone preparation

Illustration: 001-00

PORSCHE

Model: 95B **Model life 2014>>**

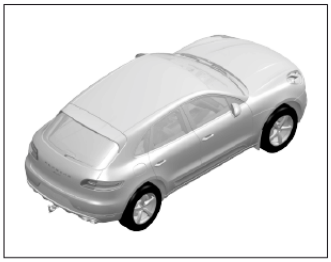

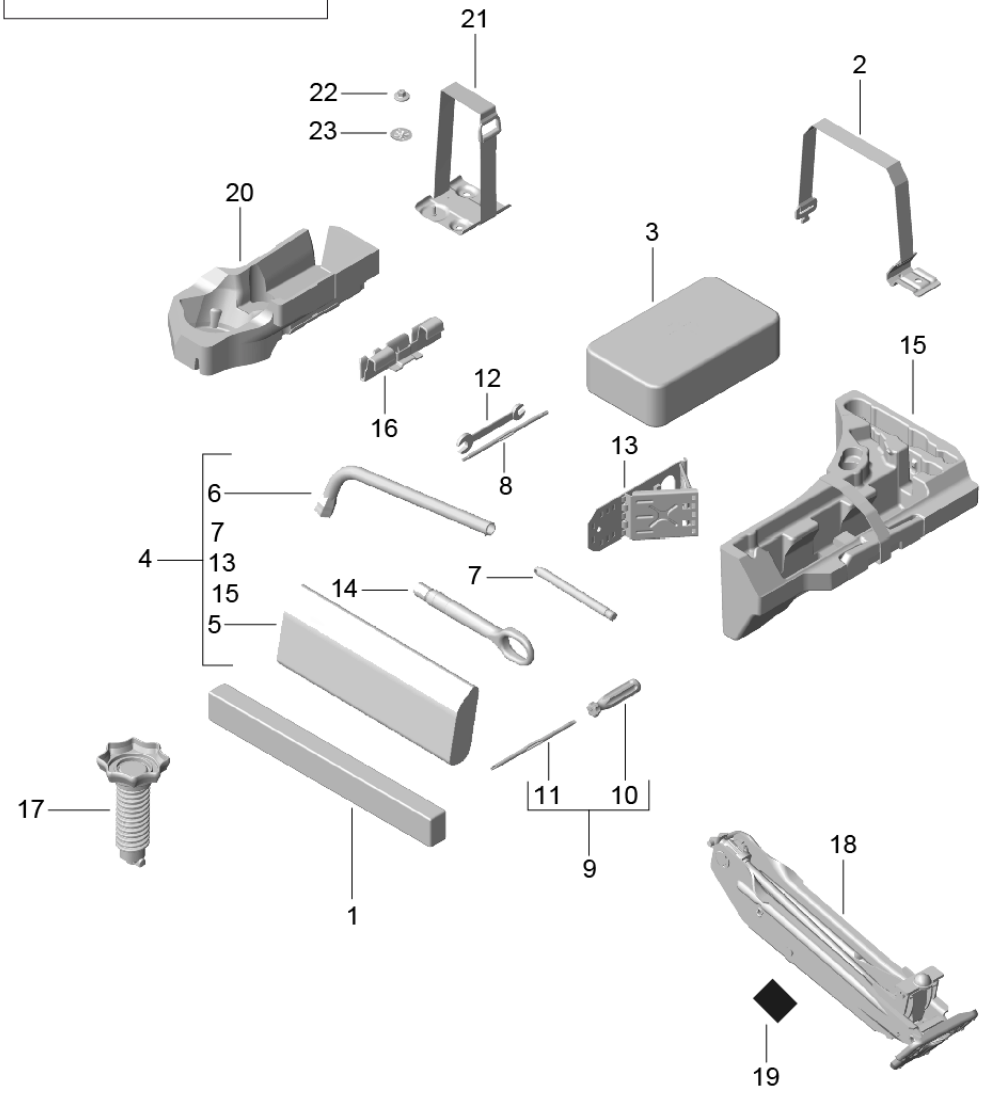

Illustration: 001-00

PORSCHE

Model: 95B **Model life 2014>>**

Pos	Part Number	Description	Remark	Qty	Model
		Tool			
		Jack			
		Warning triangle			
		First-aid kit			
1	8K0 860 251	Warning triangle		1	I1T3/1T7
2	8R0 860 273	Retaining strap		1	I1T7
3	000 722 041 00	First-aid kit		1	
		Information available			
4	95B 012 106	Tool bag		1	I1G1
5	8R0 012 115 A	Tool bag		1	I1G1
6	955 721 135 02	Rim wrench		1	I1G1
7	999 571 074 30	Threaded bolt		1	I1G1
		for			
		Wheels			
8	958 721 135 05	Screwdriver		1	
		for			
		Torx screw			
9	955 721 135 04	Screwdriver		1	
10	191 012 287	Screwdriver		1	
		Handle			
11	4D0 012 289	Screwdriver		1	
		Insert			
12	955 721 135 03	Double-end spanner		1	
		10 X 13			
13	955 721 725 00	Base wedge		1	
14	4H0 805 615	Towing lug		1	
15	95B 012 109 A	Box		1	I8RV/9VK
		Tool			
(15)	95B 012 109	Box		1	I1G1/1G4
		Tool			
16	95B 012 129	Support		1	I1G1
		Box			
		Tool			
17	1K0 803 899 E	Fastening part		1	I1G1
		Emergency wheel			
18	958 721 211 00	Jack		1	I1G1
(19)	958 701 280 00	Sticker		1	IB1P
		Jack			
(19)	958 701 282 00	Sticker		1	IB0M
		Jack			
(19)	95B 010 861 R	Sticker		1	IB0R
		Jack			
20	8R0 012 111 C	Tool kit		1	
		Compressor			
21	8R0 012 635	Support		1	
		for			
		Compressor			
22	999 049 007 40	Plastic nut		2	
23	N 903 350 04	Clamping washer		X	
		5 X 30			

Illustration: 001-05

Model: 95B **Model life 2014>>**

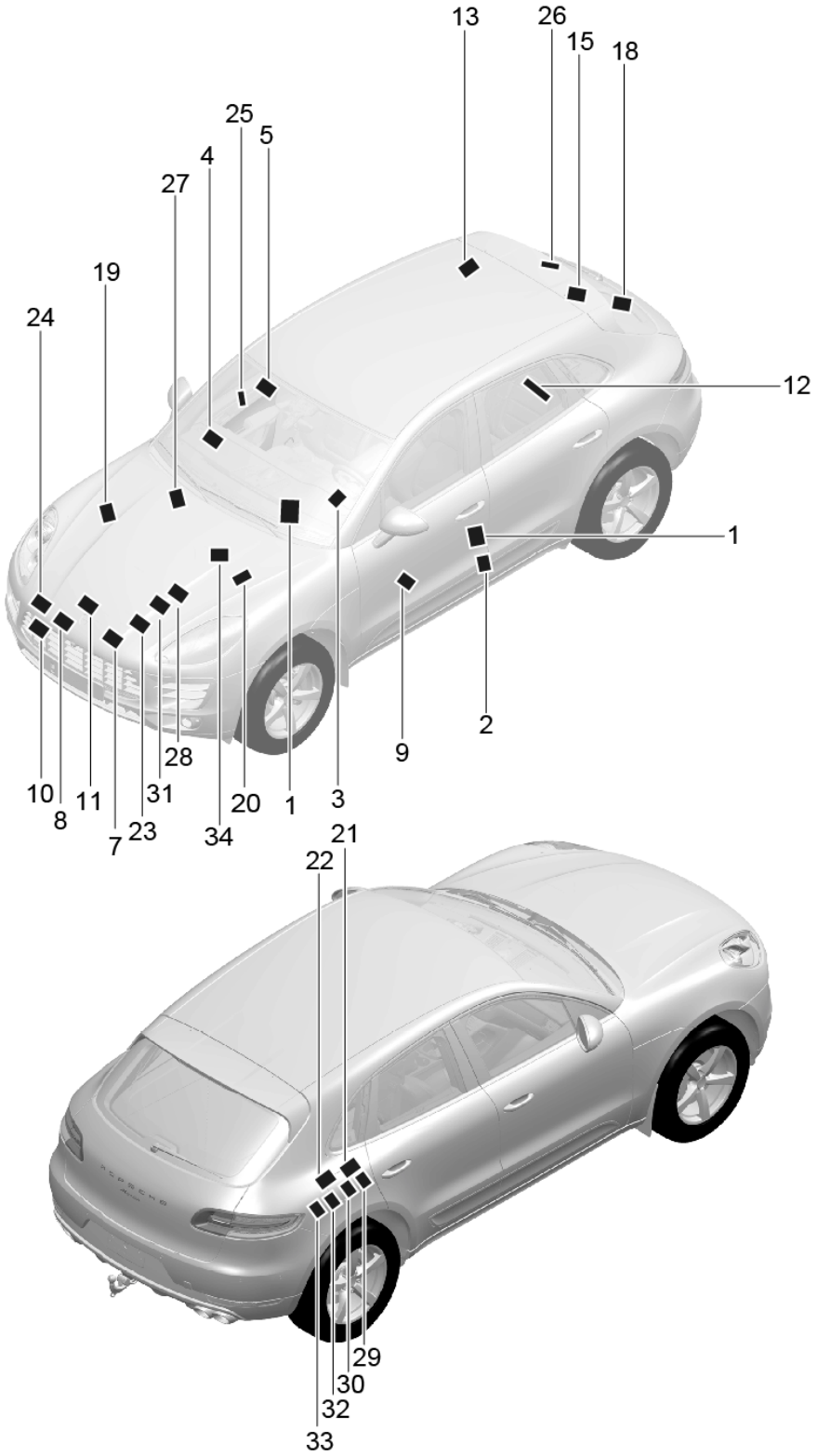

Model: 95B **Model life 2014>>**

Pos	Part Number	Description	Remark	Qty	Model
		Stickers			
1	7PP 010 831 D	Sticker Top speed		1	IH3Q/H6J/H6N
(1)	7PP 010 831 G	Sticker Top speed		1	IH3Q/H6J/H6N
(1)		Sticker Top speed		1	IH3Q/H6J/H6N
3	95B 010 866 E	Sticker Tyre pressure		1	IH3L/H6B/H6K IH6P/6Y2/6Y4
(3)	95B 010 866 F	Sticker Tyre pressure		1	IH3Q/H6B/H6K IH6P/6Y2/6Y4
4	997 701 422 00	Sticker Airbag Warning sign		1	IB0D/B0E
5	955 701 435 00	Warning sign Airbag		1	IB0A/B0L/B0N IB1C/B1D/B2A IB2G/B2H
(5)	955 701 435 10	Warning sign Airbag		1	IB1P
(5)	955 701 435 20	Warning sign Airbag		1	IB0M
(5)	955 701 435 30	Warning sign Airbag		1	IB0R
8	7PP 010 714 R	Warning sign Start/Stop		1	
9	95B 010 004 A	Warning sign Battery		1	
10	95B 010 820 D	Indication sticker see Technical information Service 89/14		1	-IB0L
11	996 701 611 00	Sticker Battery		1	
12	7PP 010 006	Sticker Emergency wheel		1	I1G1
13	958 701 119 00	Sticker Auxiliary heater		1	-IB0L/I9M1 I9M9
15	996 701 611 00	Sticker Battery		1	
18	955 701 675 15	Sticker Import Japan		1	IB0L
19	955 701 675 00	Sticker Cover Expansion tank		1	IB0L
20	955 701 675 05	Sticker Brake fluid		1	IB0L
21	955 701 676 10	Sticker Fuel filler flap		1	IB0L
22	955 701 676 15	Sticker Fuel		1	IB0L

Model: 95B **Model life 2014>>**

Pos	Part Number	Description	Remark	Qty	Model
23	955 701 673 00	Sticker Battery		1	IB0L
24	955 006 675 00	Sticker Motor fan		1	IB0L
25	970 701 523 00	Sticker Recycling		1	IB0L
26	95B 010 820 E	Indication sticker		1	IB0L
27	958 701 119 10	Sticker Auxiliary heater		1	IB0L/9M1/9M9
28	95B 010 013 P	Sticker Belt drive see Technical information Service 89/14		1	
29	95B 010 013 N	Sticker AdBlue		1	
30	95B 010 013 G	Sticker Diesel Fuel		1	
(33)	95B 010 013 C	Sticker Fuel Fuel filler flap		1	
34	95B 010 026 A	Sticker Air conditioner		1	IB1P

Illustration: 002-00

PORSCHE

Model: 95B **Model life 2014>>**

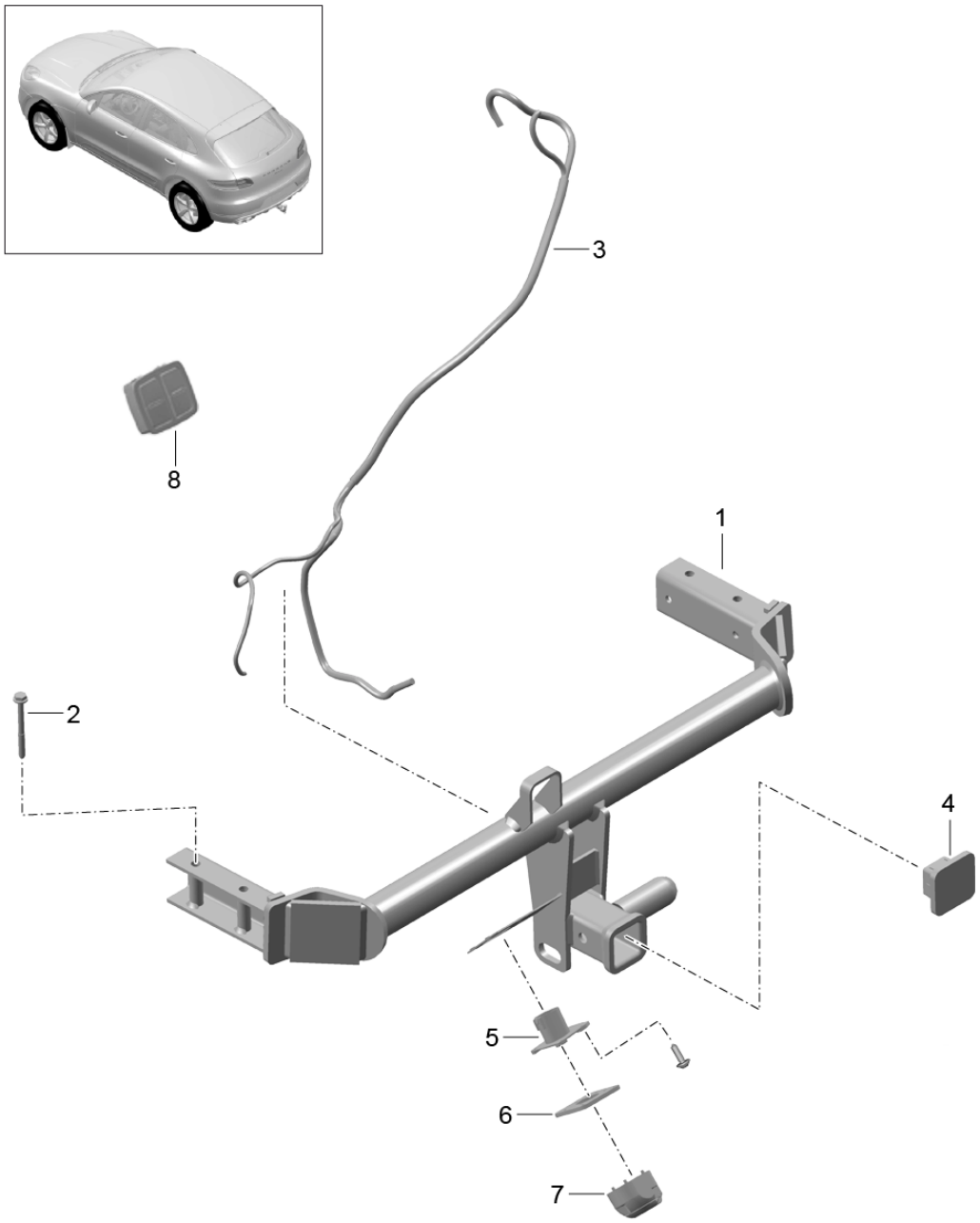

Model: 95B **Model life 2014>>**

Pos	Part Number	Description	Remark	Qty	Model
		Trailer coupling			
1	95B 803 881 D	Trailer coupling with Wiring harness		1	I1D3
(1)	8R0 800 491 A	Trailer coupling		1	
2	N 907 721 02	Combination screw		4	
3	95B 971 124 C	Wiring harness Trailer coupling		1	I1D3
(3)	95B 971 124 A	Wiring harness Trailer coupling		1	IB0R
4	7L0 803 593	Stopper		1	I1D6
5	7L5 971 885	Cap		1	I1D6
6	7L5 945 205	Adapter		1	IB0R
7	955 612 533 01	Plug socket 13-POLIG		1	IB0R
(7)	95B 945 505	Plug socket 13-POLIG		1	-IB0R/I1D3
7	7L5 945 505 B	Plug socket 7-pole		1	IB0R
8	95B 959 511	Switch		1	I1BK/1D3
	95B 959 511 DML	Matt Black/hi-gloss chrome			
(8)	95B 959 511 A	Switch		1	I1BA/1BH/1D3
	95B 959 511 A DML	Matt Black/hi-gloss chrome			
(8)	95B 959 511 B	Switch		1	I1BK/1D0/1D6 I1D7/1D8
	95B 959 511 B DML	Matt Black/hi-gloss chrome			
9	N 910 742 01	Fastening screw M5X16		4	I1D6

Illustration: 004-00

Model: 95B **Model life 2014>>**

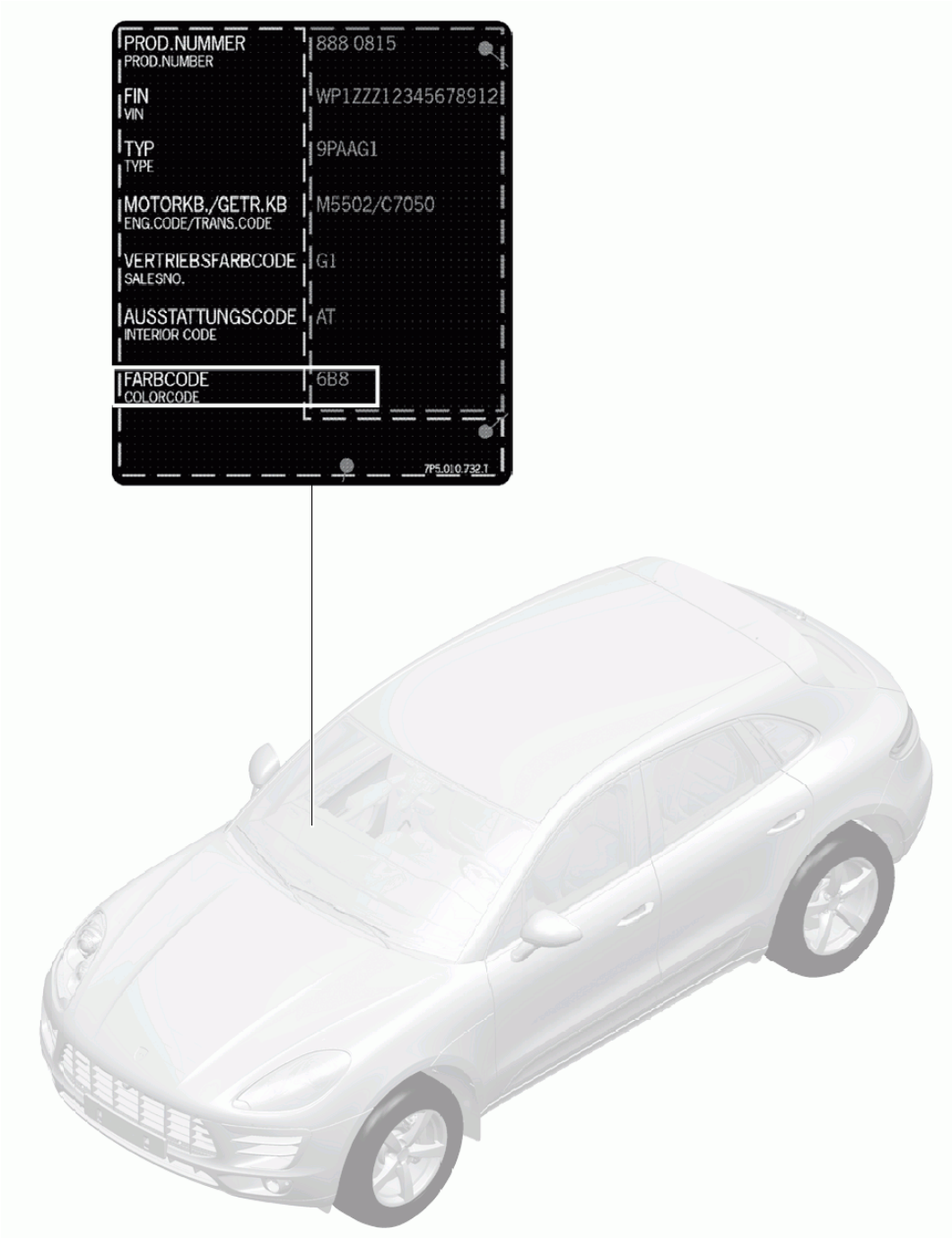

Model: 95B **Model life 2014>>**

Pos	Part Number	Description	Remark	Qty	Model
		Paint touch-up applicator			
		Lacquers			
		Paint identification label			
		see			
		On-board folder			
		Vehicle data carrier			
-	911 095 932 20	Paint touch-up applicator		X	
	911 095 932 20 041	Black			A 1
	911 095 932 20 C9A	White			0 Q
-	911 095 932 21	Paint touch-up applicator		X	
	911 095 932 21 M3C	Carmine red			0 L
-	911 095 933 20	Paint touch-up applicator		X	
		Set			
		Comprising:			
		Paint touch-up applicator			
		Primer			
		Paint touch-up applicator			
		Clear lacquer			
	911 095 933 20 C9X	Jet Black Metallic			2T
	911 095 933 20 M7S	Achat Grey Metallic			N0
	911 095 933 20 M7U	Rhodium Silver Metallic			S2
	911 095 933 20 M5J	Sapphire Blue Metallic			N 1
	911 095 933 20 M8Y	Mahogany Metallic			Y 8
	911 095 933 20 C1Y	Palladium Metallic			4T
	911 095 933 20 M5X	Dark Blue Metallic			N 4
	911 095 933 20 8M5	Impulse Red Metallic			L4
	911 095 933 20 M1R	Aurum Metallic			U8
-	911 095 933 21	Paint touch-up applicator		X	
	911 095 933 21 M7R	*			2H
-	911 095 933 30	Paint touch-up applicator		X	
		Set			
		Comprising:			
		Paint touch-up applicator			
		Primer filler			
		Paint touch-up applicator			
		Primer			
		Paint touch-up applicator			
		Clear lacquer			
	911 095 933 30 S9R	Carrara White metallic			2 Y

Illustration: 101-00

PORSCHE

Model: 95B **Model life 2014>>**

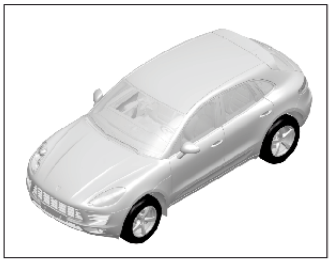

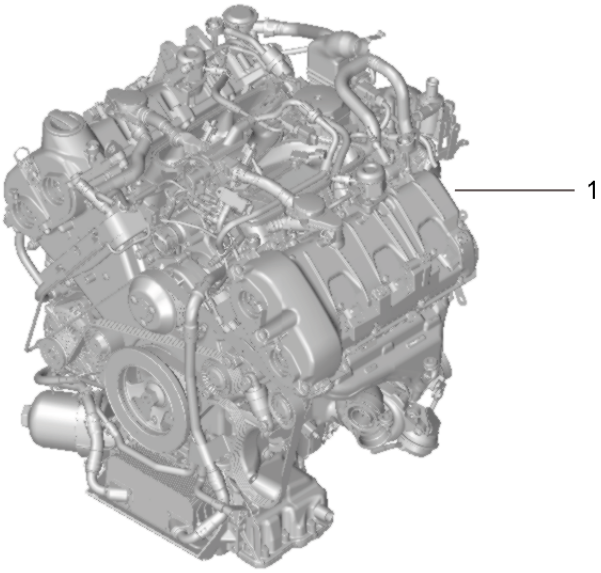

Model: 95B **Model life 2014>>**

Pos	Part Number	Description	Remark	Qty	Model
		Replacement engine without Drive plate PDK without Compressor Air conditioner			MCT.LA/MA MDC.NA
1	946 100 930 00	Replacement engine Not Ready for installation		1	MCT.MA IL0L
(1)	946 100 930 X	Replacement engine Not Ready for installation		1	MCT.MA IL0L
(1)	946 100 930 01	Replacement engine Not Ready for installation		1	MCT.MA IL0R
(1)	946 100 930 AX	Replacement engine Not Ready for installation		1	MCT.MA IL0R
(1)	946 100 935 00	Replacement engine Not Ready for installation		1	MCT.LA IL0L
(1)	946 100 935 X	Replacement engine Not Ready for installation		1	MCT.LA IL0L
(1)	946 100 935 01	Replacement engine Not Ready for installation		1	MCT.LA IL0R
(1)	946 100 935 AX	Replacement engine Not Ready for installation		1	MCT.LA IL0R
1	946 100 932 00	Replacement engine Not Ready for installation		1	MDC.NA IL0L
(1)	946 100 932 X	Replacement engine Not Ready for installation		1	MDC.NA IL0L
(1)	946 100 932 01	Replacement engine Not Ready for installation		1	MDC.NA IL0R
(1)	946 100 932 AX	Replacement engine Not Ready for installation		1	MDC.NA IL0R

Illustration: 101-10

PORSCHE

Model: 95B **Model life 2014>>**

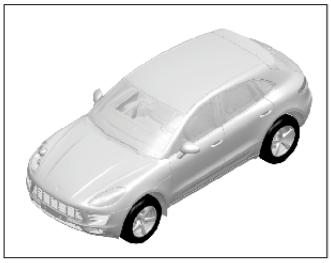

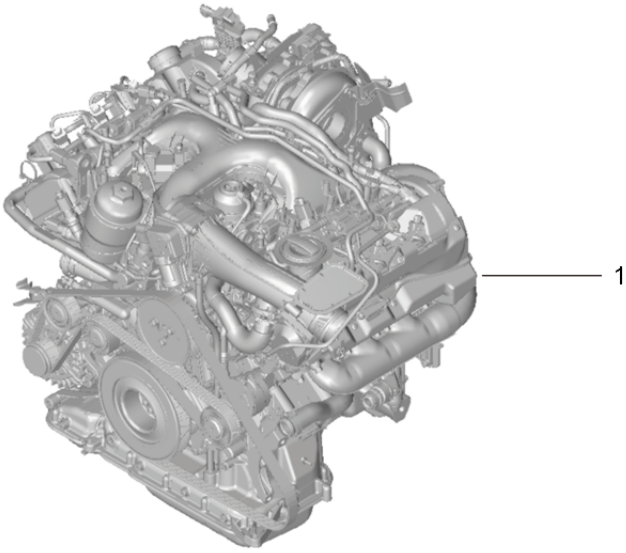

Model: 95B **Model life 2014>>**

Pos	Part Number	Description	Remark	Qty	Model
		Replacement engine with Drive plate PDK			MCD.UD MCT.BA/BB/BC
1	059 100 026 CA	Replacement engine Not Ready for installation		1	MCD.UD
(1)	059 100 026 CX	Replacement engine Not Ready for installation		1	MCD.UD
(1)	059 100 026 BL	Replacement engine Not Ready for installation		1	MCT.BA/BB/BC
(1)	059 100 026 BX	Replacement engine Not Ready for installation		1	MCT.BA/BB/BC

Illustration: 101-20

PORSCHE

Model: 95B **Model life 2014>>**

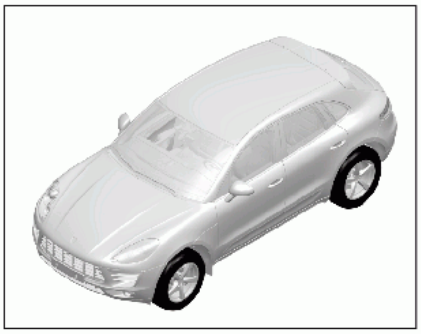

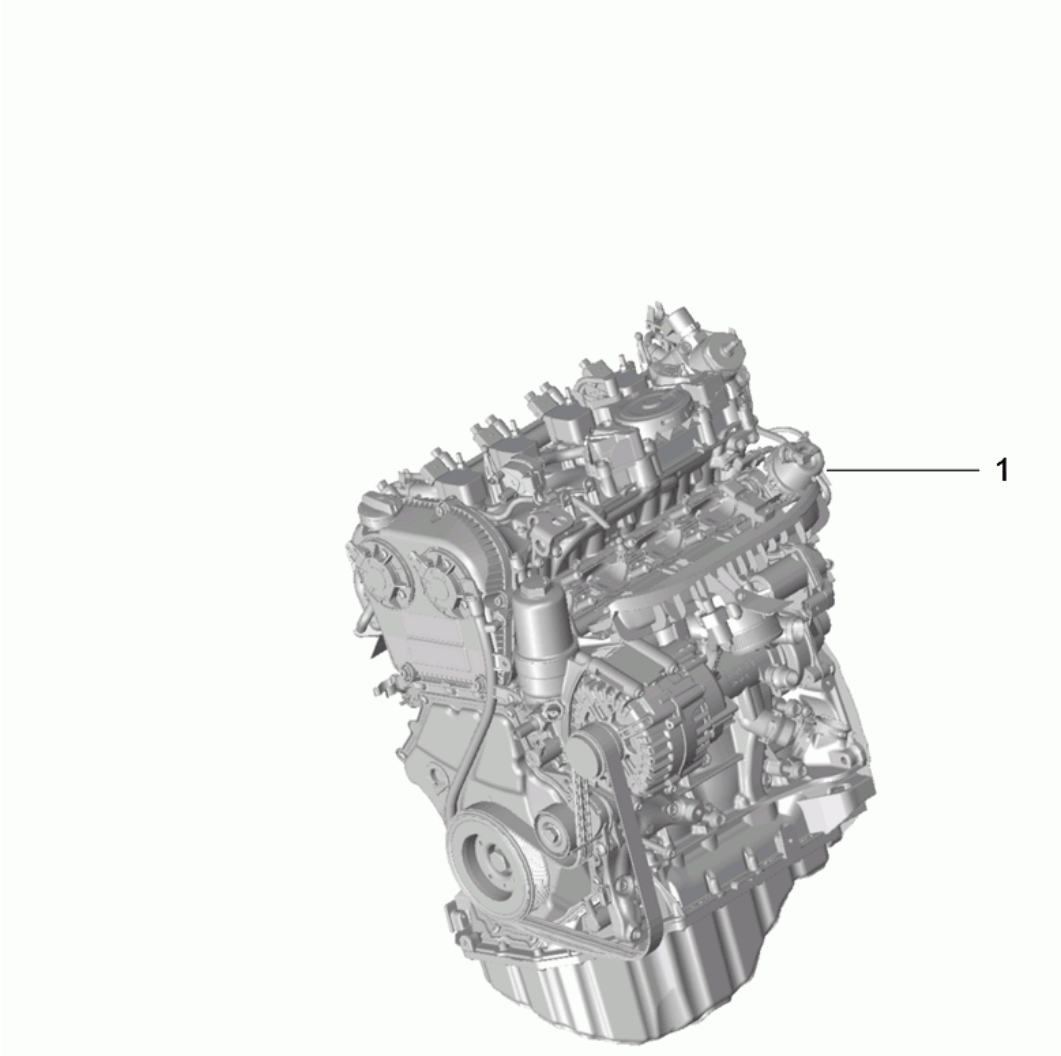

Model: 95B **Model life 2014>>**

Pos	Part Number	Description	Remark	Qty	Model
		Replacement engine with Drive plate PDK			MCN.CC MCY.NA/NB/PA
1	06L 100 010 AC	Replacement engine Not Ready for installation		1	MCY.NA/NB I7GB
(1)	06L 100 010 AX	Replacement engine Not Ready for installation		1	MCY.NA/NB I7GB
(1)	06L 100 010 AF	Replacement engine Not Ready for installation		1	MCN.CC I7GH/7MM
(1)	06L 100 010 BX	Replacement engine Not Ready for installation		1	MCN.CC I7GH/7MM
(1)	9A7 100 010 00	Replacement engine Not Ready for installation	-(CN)	1	MCY.PA I7GH/7MM
(1)	9A7 100 010 CX	Replacement engine Not Ready for installation	-(CN)	1	MCY.PA I7GH/7MM
(1)	9A7 100 010 10	Replacement engine Not Ready for installation	(CN)	1	MCY.PA I7MM
(1)	9A7 100 010 DX	Replacement engine Not Ready for installation	(CN)	1	MCY.PA I7MM

Illustration: 101-25

PORSCHE

Model: 95B **Model life 2014>>**

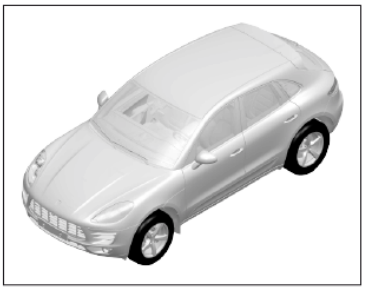

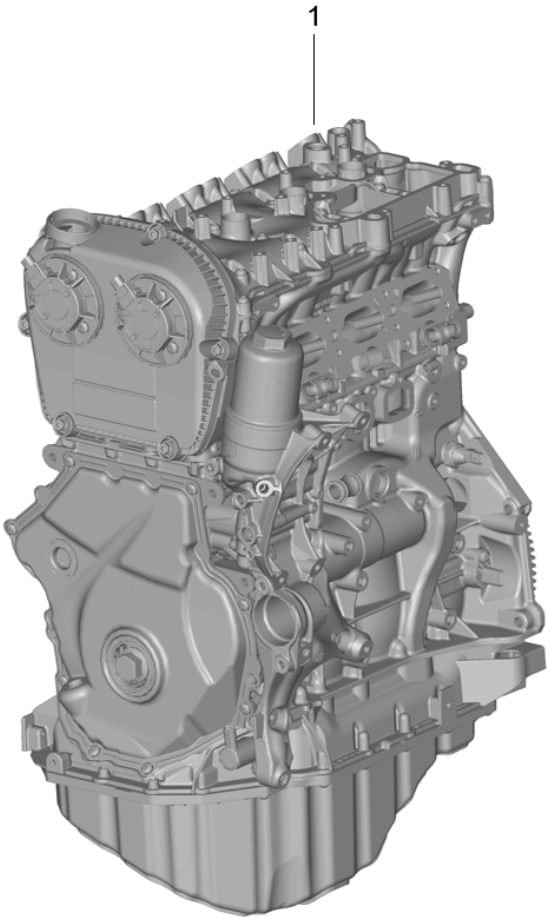

Model: 95B **Model life 2014>>**

Pos	Part Number	Description	Remark	Qty	Model
		Short engine Comprising: Valve cover Cylinder head Crankcase Crank drive Oil pan			MCN.CC MCY.NA/NB/PA
1	9A7 100 033 00	Short engine Not Ready for installation		1	MCN.CC I7GH/7MM
(1)	9A7 100 033 X	Short engine Not Ready for installation		1	MCN.CC I7GH/7MM
(1)	9A7 100 033 10	Short engine Not Ready for installation		1	MCY.PA I7GH/7MM
(1)	9A7 100 033 KX	Short engine Not Ready for installation		1	MCY.PA I7GH/7MM
(1)	9A7 100 033 05	Short engine Not Ready for installation		1	MCY.NA/NB I7GB
(1)	9A7 100 033 EX	Short engine Not Ready for installation		1	MCY.NA/NB I7GB

Illustration: 101-30

PORSCHE

Model: 95B **Model life 2014>>**

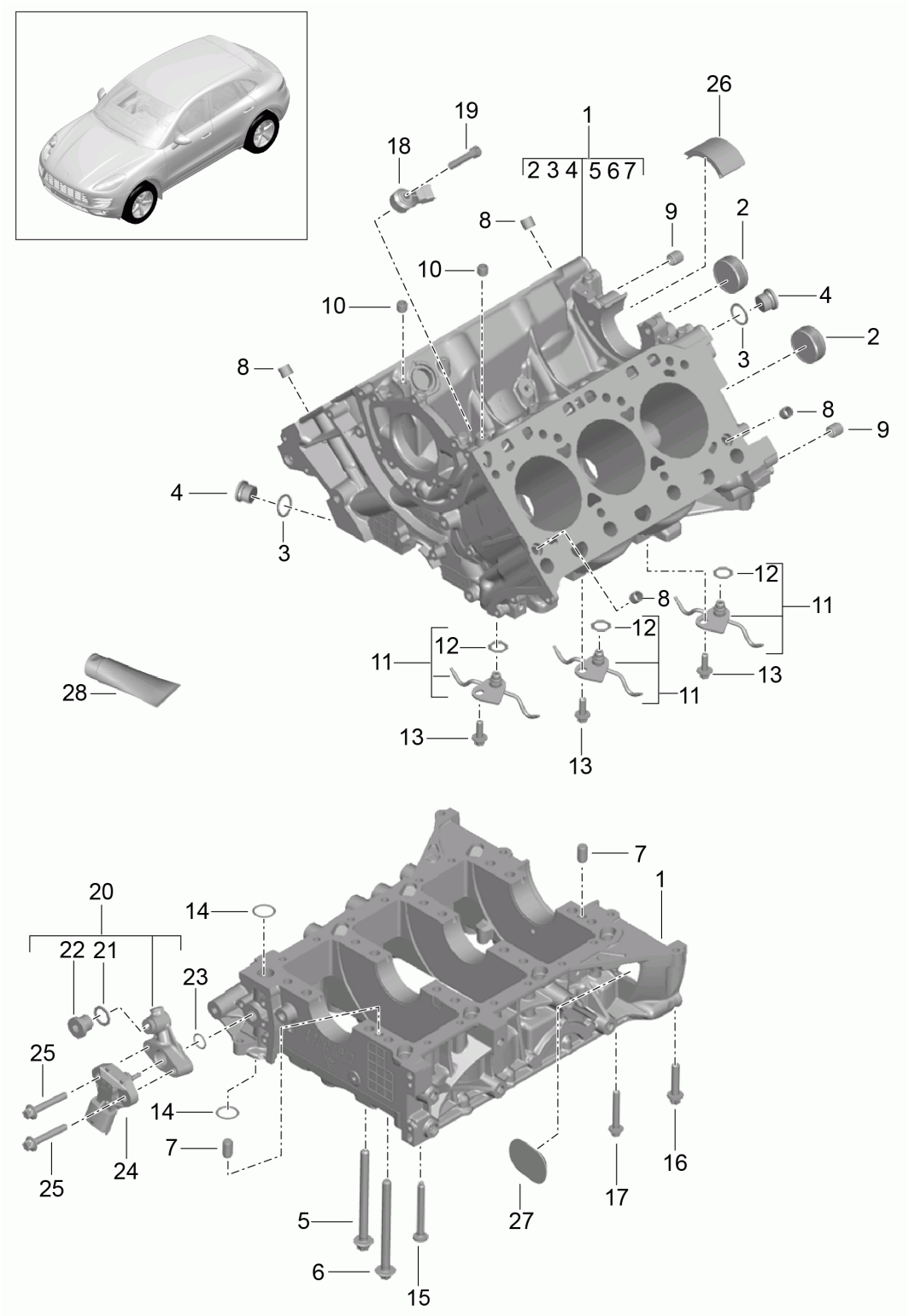

Illustration: 101-30

Model: 95B **Model life 2014>>**

Pos	Part Number	Description	Remark	Qty	Model
		Crankcase			MCT.LA/MA MDC.NA
		Single parts			
1	946 101 001 30	Crankcase without Piston	-14	1	
		Use also:			
		Piston		6	
		014.301.153.B		4	
		946.101.153.30		2	
		996.106.103.50		2	
		946.101.017.77		3	
		900.385.009.01		3	
		999.707.481.40		2	
(1)	946 101 001 31	Crankcase without Piston	15-	1	
		Use also:			
		Piston		6	
		014.301.153.B		4	
		946.101.153.30		2	
		996.106.103.50		2	
		946.101.017.77		3	
		900.385.009.01		3	
		999.707.481.40		2	
2	948 101 216 00	Lid		2	
3	900 123 118 30	Sealing ring A 22 X 27		2	
4	999 063 024 30	Screw plug M 22 X 1,5		2	
5	948 101 190 01	Screw M 11 X 1,5 X 130		6	
(5)	948 101 190 40	Screw M 11 X 1,5 X 113,5		2	
6	948 101 191 01	Screw M 10 X 1,5 X 117		6	
(6)	948 101 191 41	Screw M 10 X 1,5 X 107,5		2	
7	999 012 051 00	Straight pin BM 10 X 18		2	
8	014 301 153 B	Dowel sleeve 13 X 16 X 13,5		4	
9	946 101 153 30	Dowel sleeve 13 X 16 X 15		2	
(9)	946 101 153 31	Dowel sleeve 13 X 16 X 15		2	
10	996 106 103 50	Dowel sleeve 8,2 X 7		2	
11	946 101 017 78	Spray nozzle		3	
12	999 707 509 40	O-ring 8,55 X 2		3	
13	900 385 009 01	Torx screw BM 6 X 16		3	
14	999 707 481 40	O-ring 24 X 3		2	
15	999 073 915 31	Oval-head screw M 8 X 70		12	
16	900 385 042 01	Torx screw BM 8 X 35		2	
17	900 385 071 01	Torx screw BM 8 X 50		2	
18	997 606 121 00	Knock sensor		2	
19	900 067 102 02	Pan-head screw		2	

Illustration: 101-30

PORSCHE

Model: 95B **Model life 2014>>**

Pos	Part Number	Description	Remark	Qty	Model
		M 8 X 35			
20	948 107 314 20	Adapter		1	
21	900 123 144 30	Sealing ring A 10 X 13,5		1	
22	900 219 023 01	Screw plug M 10 X 1		1	
23	999 707 575 40	O-ring 20 X 3		1	
24	948 606 213 00	Oil pressure sender		1	
25	900 385 045 01	Torx screw BM 6 X 40		2	
26	7PP 103 113	Lid		1	
27	955 301 729 10	Stopper		1	
28	999 915 573 43	Sealing compound 1 tube 75 ML for Crankcase Lower part		X	

Illustration: 101-40

PORSCHE

Model: 95B **Model life 2014>>**

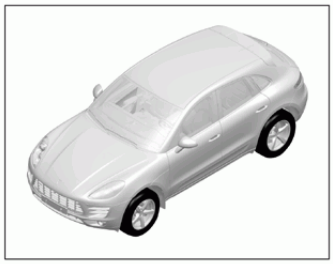

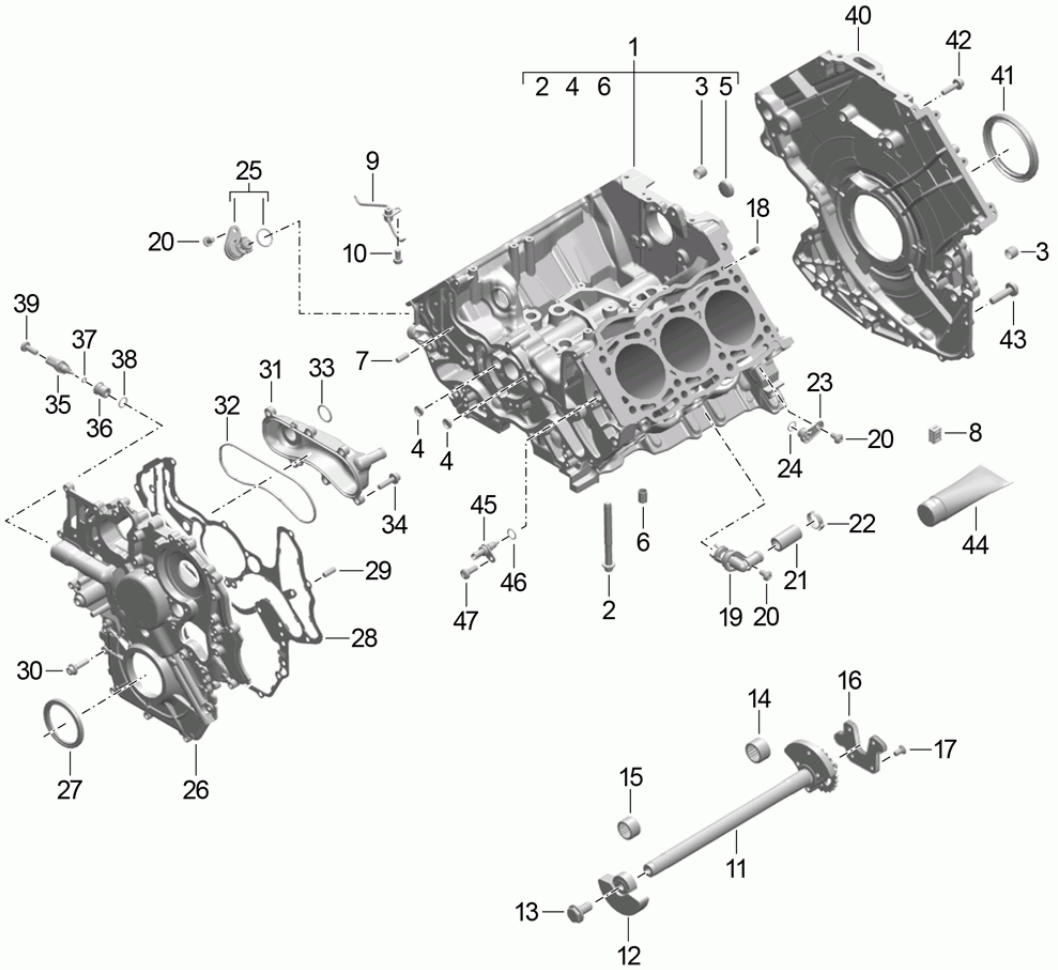

Illustration: 101-40

Model: 95B **Model life 2014>>**

Pos	Part Number	Description	Remark	Qty	Model
		Crankcase			MCD.UD MCT.BA/BB/BC
		Single parts			
1	958 101 011 21	Crankcase Use also:		1	
		Piston		6	
2	WHT 003 959	Bearing screw M 11 X 1,5 X 107		16	
3	955 101 139 01	Dowel sleeve 16 X 13,5		2	
4	N 011 903 10	Lid A 16		2	
5	N 011 914 10	Lid A 24		4	
6	955 101 139 10	Dowel sleeve		4	
7	N 106 678 01	Straight pin 6 X 16		2	
8	955 101 147 00	Gasket Joint flange Rear		2	
9	958 101 017 30	Spray nozzle Engine oil		3	
10	N 910 547 01	Fit bolt M 6 X 6 X 12		3	
11	958 101 025 11	Balance shaft		1	
12	955 101 332 00	Balance weight Front		1	
13	N 908 932 02	Hexagon-head bolt M 10 X 20		1	
14	958 101 869 40	Needle-roller bearing 25 MM		1	
15	955 101 869 10	Needle-roller bearing 22 MM		1	
16	958 101 407 01	Lid		1	
17	N 104 560 04	Countersunk-head screw M 6 X 12		4	
18	955 102 277 00	Roll pin 6,2 X 22		4	
19	958 106 155 20	Lid		1	
20	N 101 703 02	Oval-head screw M 6 X 10		3	
21	958 110 335 10	Cap Adapter		1	
22	N 102 020 01	Hose clamp B 23 X 12		1	
23	958 106 155 01	Lid		1	
24	N 907 834 02	O-ring 13,1 X 1,6		1	
25	958 106 155 20	Lid		1	
26	958 101 151 12	Joint flange Front with Gaskets		1	
-	WHT 005 400	Washer 11 X 67 X 3,5		1	
27	955 101 052 00	Shaft sealing ring		1	
28	958 101 161 03	Gasket		1	
29	N 106 678 01	Straight pin 6 X 16		2	
30	N 911 804 01	Outer hexagon round screw M 6 X 22		22	
31	958 101 525 00	Lid		1	
32	958 101 161 11	Gasket		1	

Model: 95B **Model life 2014>>**

Pos	Part Number	Description	Remark	Qty	Model
33	N 904 650 04	O-ring 23 X 2,6		1	
34	N 107 002 01	Outer hexagon round screw M 6 X 22		6	
35	958 606 623 20	Temperature sensor		1	
36	958 101 826 02	Sleeve for Temperature sensor		1	
37	WHT 002 287 C	O-ring 5,6 X 2		1	
38	N 908 514 01	O-ring 14 X 1,78 Behind Adapter Sleeve Temperature sensor		1	
39	N 104 514 08	Lens-head screw M 6 X 16		1	
40	958 101 071 50	Joint flange Rear Use also: Gasket 955.101.147.00 Sealing compound 000.043.300.39		1 2 X	
41	958 101 153 01	Shaft sealing ring		1	
42	N 107 002 01	Outer hexagon round screw M 6 X 22		18	
43	N 107 453 01	Outer hexagon round screw M 8 X 30		6	
44	000 043 300 39	Sealing compound 1 tube 50 ML		X	
45	958 606 623 00	Temperature sensor Coolant		1	
46	WHT 002 287 B	O-ring 5,6 X 2		1	
47	N 101 703 02	Oval-head screw M 6 X 10		1	

Illustration: 101-50

PORSCHE

Model: 95B **Model life 2014>>**

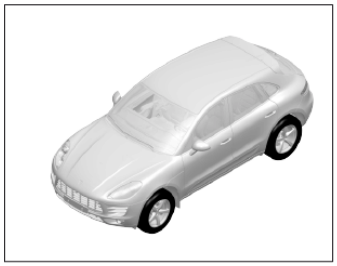

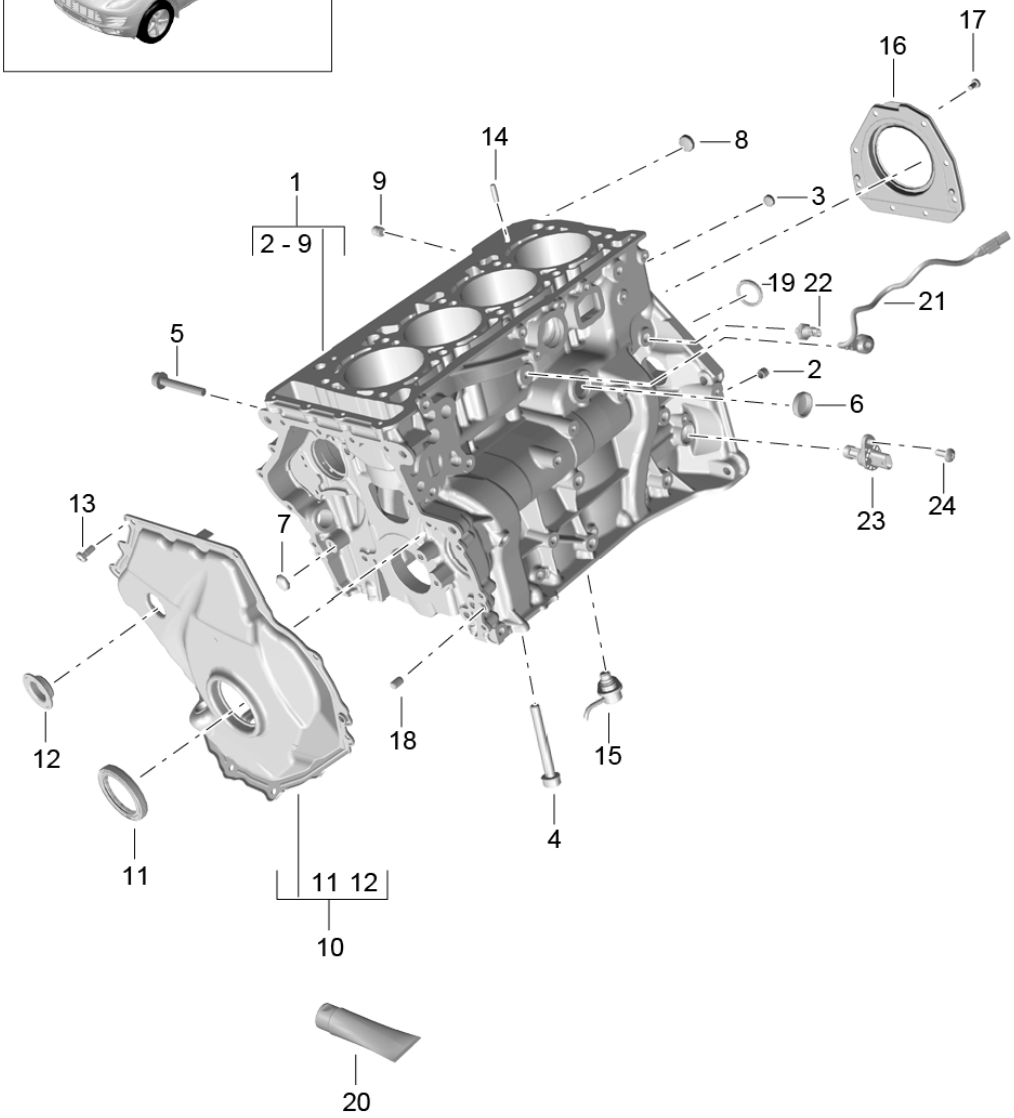

Model: 95B **Model life 2014>>**

Pos	Part Number	Description	Remark	Qty	Model
		Crankcase			MCN.CC MCY.NA/NB/PA
		Single parts			
1	958 103 011 00	Crankcase Not available		1	
2	955 101 139 01	Dowel sleeve 16 X 13,5		2	
3	N 011 907 8	Lid A 14		2	
4	N 911 189 02	Multiple-tooth screw M 10 X 80		10	
5	N 911 875 01	Multiple-tooth screw M 8 X 50		6	
6	N 011 919 4	Lid A 25		2	
7	N 011 910 4	Lid A 10		3	
8	N 011 901 10	Lid A 20		2	
9		Lid Not available		1	
10	958 109 210 00	Control box cover		1	
11	958 103 085 00	Shaft sealing ring 45 X 60 X 8		1	
12	958 115 418 00	Stopper		1	
13	N 910 967 02	Round head screw M 6 X 16		15	
14	958 103 139 00	Straight pin M 6 X 20		2	
15	958 103 154 00	Spray nozzle with Screw M >> CNC103889		4	MCN.CC
(15)	958 103 154 10	Spray nozzle with Screw		4	MCY.NA/NB
(15)	958 103 154 20	Spray nozzle with Screw M CNC103890 >>		4	MCN.CC MCY.PA
16	958 103 171 00	Joint flange		1	
17	N 103 352 06	Round head screw M 6 X 12		6	
18	N 106 171 01	Straight pin M 8 X 12		2	
19	958 103 085 10	Shaft sealing ring 15 X 32 X 7		1	
20	958 101 901 00	Sealing compound 18 ML		X	
21	958 905 377 00	Knock sensor with Line		1	
22	958 919 081 00	Oil pressure switch		1	
23	958 906 433 00	Pulse sender Crankshaft		1	
(23)	958 906 433 01	Pulse sender Crankshaft		1	
24	N 107 512 01	Outer hexagon round screw		1	

Illustration: 101-60

PORSCHE

Model: 95B **Model life 2014>>**

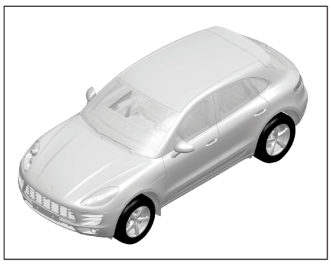

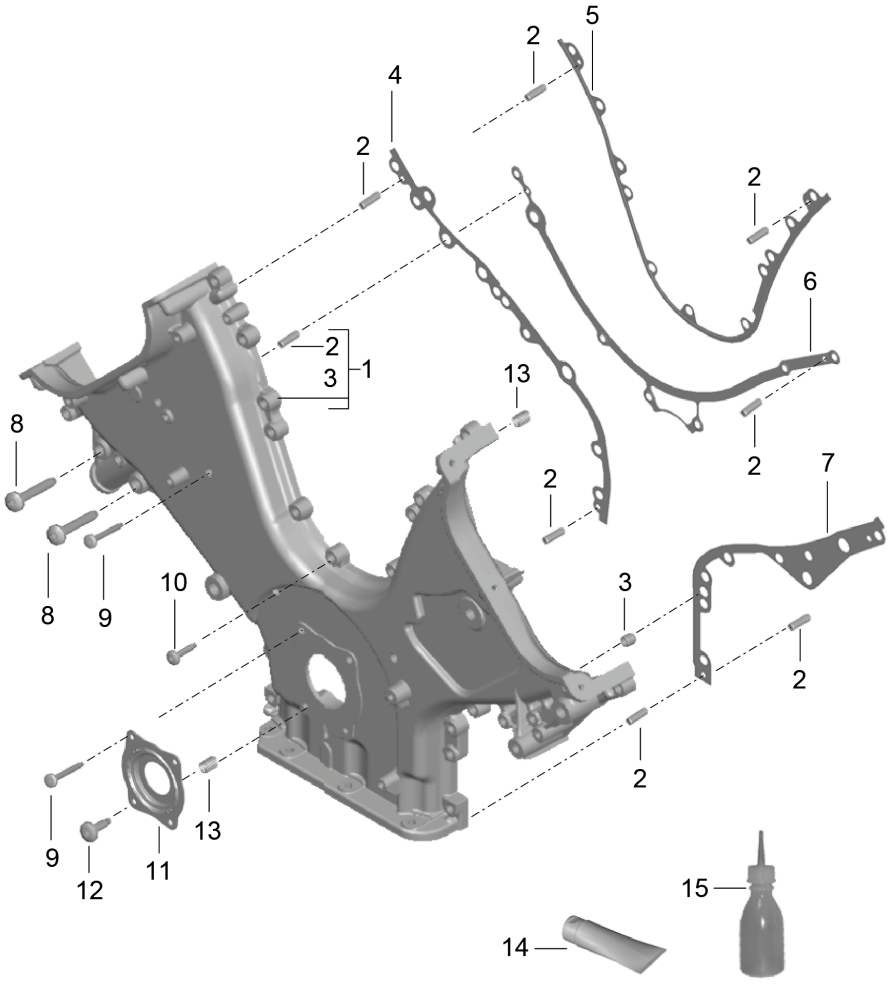

Model: 95B **Model life 2014>>**

Pos	Part Number	Description	Remark	Qty	Model
		Control box cover			MCT.LA/MA
					MDC.NA
		Joint flange			
1	946 101 022 01	Control box cover		1	
		Magnesium			
		M >> CTM012407			MCT.MA
		M >> CTL005789			MCT.LA
(1)	946 101 022 02	Control box cover		1	MDC.NA
		Magnesium			
		M CTM012408 >>			MCT.MA
		M CTL005790 >>			MCT.LA
2	900 012 204 30	Straight pin		8	
		6 X 16			
3	944 104 361 00	Dowel sleeve		1	
		8,5 X 8,5			
4	946 101 130 03	Gasket		1	
		M >> CTM012407			MCT.MA
		M >> CTL005789			MCT.LA
(4)	946 101 130 04	Gasket		1	MDC.NA
		M CTM012408 >>			MCT.MA
		M CTL005790 >>			MCT.LA
5	948 101 125 20	Gasket		1	
6	948 101 127 20	Gasket		1	
7	946 101 129 03	Gasket		1	
		M >> CTM012407			MCT.MA
		M >> CTL005789			MCT.LA
(7)	946 101 129 04	Gasket		1	MDC.NA
		M CTM012408 >>			MCT.MA
		M CTL005790 >>			MCT.LA
8	999 073 913 31	Oval-head screw		2	
		Aluminium			
		M 8 X 55			
9	999 073 914 31	Oval-head screw		9	
		Aluminium			
		M 6 X 55			
10	999 073 905 31	Oval-head screw		21	
		Aluminium			
		M 6 X 30			
11	948 101 910 20	Joint flange		1	
		with			
		Assembly sleeve			
12	999 073 903 31	Oval-head screw		2	
		Aluminium			
		M 6 X 20			
13	999 504 084 01	Threaded insert		X	
		M 6 X 12			
		for			
		Thread repair			
		Control box cover			
		Magnesium			
14	000 043 204 35	Sealing compound		X	
		1 tube			
		50 ML.			
		for			
		Control box cover			
15	000 043 209 93	Cleaning agent		1	
		Corrosion protection			
		Loctite			
		7515			
		Atomiser			
		100 ML			
		for			
		Control box cover			

Illustration: 102-00

PORSCHE

Model: 95B **Model life 2014>>**

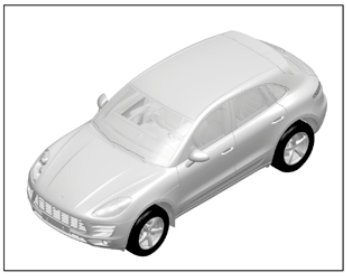

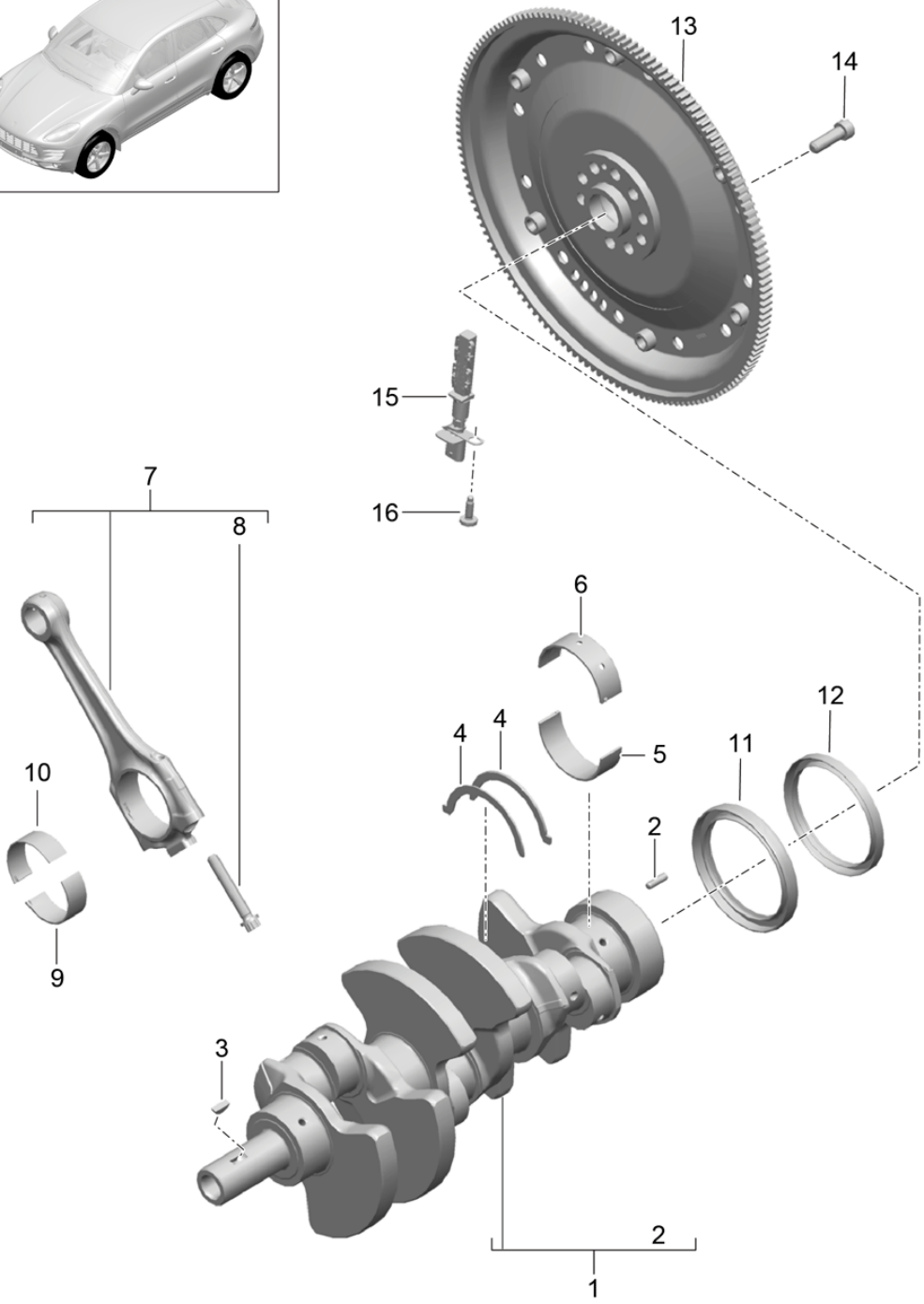

Model: 95B **Model life 2014>>**

Pos	Part Number	Description	Remark	Qty	Model
		Crankshaft			MCT.LA/MA
					MDC.NA
		Connecting rod			
1	946 102 011 60	Crankshaft		1	
		M >> CTM010870			MCT.MA
(1)	946 102 011 61	Crankshaft		1	MDC.NA
		M CTM010871 >>			MCT.MA
(1)	946 102 011 35	Crankshaft		1	
		M >> CTL005137			MCT.LA
(1)	946 102 011 36	Crankshaft		1	
		M CTL005138 >> CTL006484			MCT.LA
(1)	946 102 011 37	Crankshaft		1	
		M CTL006485 >>			MCT.LA
2	900 302 049 00	Straight pin		1	
		6 X 20			
3	900 118 007 00	Woodruff key		1	
		5,0 X 6,5			
4	948 101 215 10	Thrust washer		2	
5	948 101 241 08	Main bearing shell		4	
		Lower			
		Identification			
		Red			
(5)	948 101 241 09	Main bearing shell		4	
		Lower			
		Identification			
		Yellow			
(5)	948 101 241 10	Main bearing shell		4	
		Lower			
		Identification			
		Blue			
(5)	948 101 241 11	Main bearing shell		4	
		Lower			
		Identification			
		Green			
6	948 101 242 08	Main bearing shell		4	
		Upper			
		Identification			
		Red			
(6)	948 101 242 09	Main bearing shell		4	
		Upper			
		Identification			
		Yellow			
(6)	948 101 242 10	Main bearing shell		4	
		Upper			
		Identification			
		Blue			
(6)	948 101 242 11	Main bearing shell		4	
		Upper			
		Identification			
		Green			
7	946 103 019 30	Connecting rod		6	
		Complete			
		M >> CTM010870			MCT.MA
(7)	946 103 019 31	Connecting rod		6	MDC.NA
		Complete			
		M CTM010871 >>			MCT.MA
(7)	946 103 019 36	Connecting rod		6	
		Complete			
		M >> CTL005137			MCT.LA
(7)	946 103 019 37	Connecting rod		6	
		Complete			
		M CTL005138 >>			MCT.LA
8	997 103 115 01	Connecting rod bolt		12	

Model: 95B **Model life 2014>>**

Pos	Part Number	Description	Remark	Qty	Model
9	948 103 230 23	Connecting-rod bearing Lower Identification Red M >> CTM027798		6	MCT.MA
(9)	948 103 230 26	Connecting-rod bearing Lower Identification Red M CTM027799 >>		6	MDC.NA MCT.MA
(9)	946 103 254 00	Conrod bearing shell Lower Identification Red M >> CTL009737		6	MCT.LA
(9)	946 103 254 03	Conrod bearing shell Lower Identification Red M CTL009738 >>		6	MCT.LA
(9)	948 103 230 24	Connecting-rod bearing Lower Identification Yellow M >> CTM027798		6	MCT.MA
(9)	948 103 230 27	Connecting-rod bearing Lower Identification Yellow M CTM027799 >>		6	MDC.NA MCT.MA
(9)	946 103 254 01	Conrod bearing shell Lower Identification Yellow M >> CTL009737		6	MCT.LA
(9)	946 103 254 04	Conrod bearing shell Lower Identification Yellow M CTL009738 >>		6	MCT.LA
(9)	948 103 230 25	Connecting-rod bearing Lower Identification Blue M >> CTM027798		6	MCT.MA
(9)	948 103 230 28	Connecting-rod bearing Lower Identification Blue M CTM027799 >>		6	MDC.NA MCT.MA
(9)	946 103 254 02	Conrod bearing shell Lower Identification Blue M >> CTL009737		6	MCT.LA
(9)	946 103 254 05	Conrod bearing shell Lower Identification Blue M CTL009738 >>		6	MCT.LA
10	946 103 352 00	Connecting-rod bearing Upper Identification		6	

Model: 95B **Model life 2014>>**

Pos	Part Number	Description	Remark	Qty	Model
		Red			
		M >> CTM027798			MCT.MA
(10)	946 103 352 03	Connecting-rod bearing		6	
		Upper			
		Identification			
		Red			
		M CTM027799 >>			MCT.MA
(10)	946 103 354 00	Conrod bearing shell		6	
		Upper			
		Identification			
		Red			
		M >> CTL009737			MCT.LA
(10)	946 103 354 03	Conrod bearing shell		6	
		Upper			
		Identification			
		Red			
		M CTL009738 >>			MCT.LA
(10)	946 103 352 01	Connecting-rod bearing		6	
		Upper			
		Identification			
		Yellow			
		M >> CTM027798			MCT.MA
(10)	946 103 352 04	Connecting-rod bearing		6	MDC.NA
		Upper			
		Identification			
		Yellow			
		M CTM027799 >>			MCT.MA
(10)	946 103 354 01	Conrod bearing shell		6	
		Upper			
		Identification			
		Yellow			
		M >> CTL009737			MCT.LA
(10)	946 103 354 04	Conrod bearing shell		6	
		Upper			
		Identification			
		Yellow			
		M CTL009738 >>			MCT.LA
(10)	946 103 352 02	Connecting-rod bearing		6	
		Upper			
		Identification			
		Blue			
		M >> CTM027798			MCT.MA
(10)	946 103 352 05	Connecting-rod bearing		6	MDC.NA
		Upper			
		Identification			
		Blue			
		M CTM027799 >>			MCT.MA
(10)	946 103 354 02	Conrod bearing shell		6	
		Upper			
		Identification			
		Blue			
		M >> CTL009737			MCT.LA
(10)	946 103 354 05	Conrod bearing shell		6	
		Upper			
		Identification			
		Blue			
		M CTL009738 >>			MCT.LA
11	997 101 212 01	Shaft sealing ring		1	
12	946 606 135 00	Carrier disc with magnets		1	
13	95B 105 323	Drive plate		1	
14	N 906 651 01	Pan-head screw		10	
		M 10 X 1 X 29			
15	946 606 131 01	Sensor		1	

Model: 95B **Model life 2014>>**

Pos	Part Number	Description	Remark	Qty	Model
16	999 073 903 31	Oval-head screw M 6 X 20		1	

Illustration: 102-10

PORSCHE

Model: 95B **Model life 2014>>**

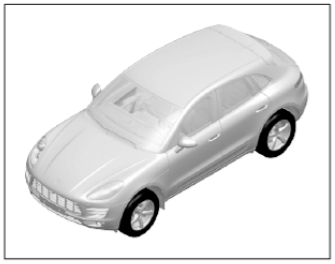

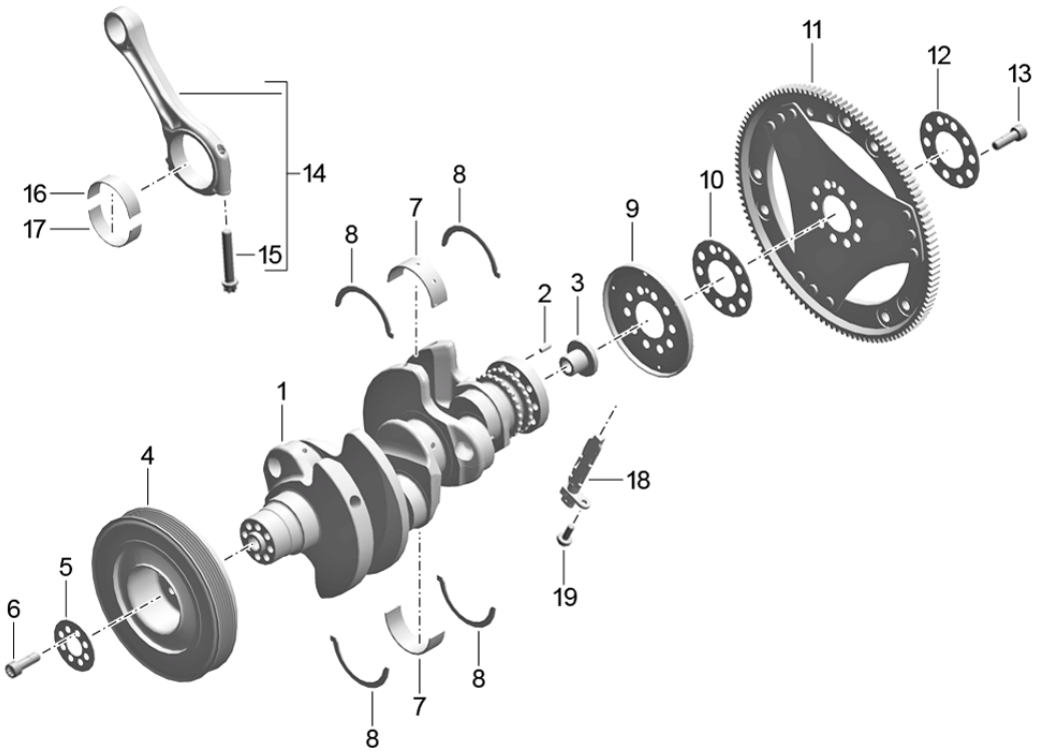

Model: 95B **Model life 2014>>**

Pos	Part Number	Description	Remark	Qty	Model
		Crankshaft			MCD.UD MCT.BA/BB/BC
		Connecting rod			
1	958 102 011 30	Crankshaft Use also:		1	
		N .013.199.1		1	
		955.102.329.00		1	
2	N 013 199 1	Straight pin 6 X 14		1	
3		Bush Not available		1	
4	958 102 241 02	Vibration damper		1	
5	WHT 003 351	Shim 24,5 X 60,5 X 1,5		1	
6	N 910 059 02	Pan-head screw M 8 X 25		8	
7	958 101 241 13	Main bearing shell Lower Identification Blue		4	
(7)	958 101 241 14	Main bearing shell Lower Identification Yellow		4	
(7)	958 101 241 15	Main bearing shell Lower Identification Red		4	
(7)	958 101 242 13	Main bearing shell Upper Identification Blue		4	
(7)	958 101 242 14	Main bearing shell Upper Identification Yellow		4	
(7)	958 101 242 15	Main bearing shell Upper Identification Red		4	
8	955 102 902 00	Thrust washer Set Comprising:		1	
		Thrust washer Lower		2	
		Thrust washer Upper		2	
9	958 102 189 00	Drive plate Pulse sender		1	
10		Shim Not available		1	
11	958 102 327 12	Drive plate		1	
12		Shim Not available		1	
13	N 905 398 01	Pan-head screw M 10 X 1 X 19		10	
(13)	N 909 294 01	Pan-head screw M 10 X 1 X 27		10	
(13)	958 007 991 00	Pan-head screw M 10 X 1 X 27		10	
14	958 103 975 20	Connecting rod Set Comprising:		1	

Model: 95B **Model life 2014>>**

Pos	Part Number	Description	Remark	Qty	Model
		Connecting rod		6	
15	955 102 425 10	Connecting rod bolt M 8 X 1 X 50		12	
16	958 103 210 30	Conrod bearing shell Upper Identification Yellow		6	
17	958 103 210 40	Conrod bearing shell Lower Identification Yellow		6	
18	958 606 433 11	Pulse sender		1	
19	N 104 056 04	Oval-head screw M 6 X 14		1	

Illustration: 102-20

PORSCHE

Model: 95B **Model life 2014>>**

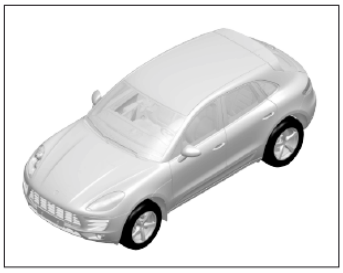

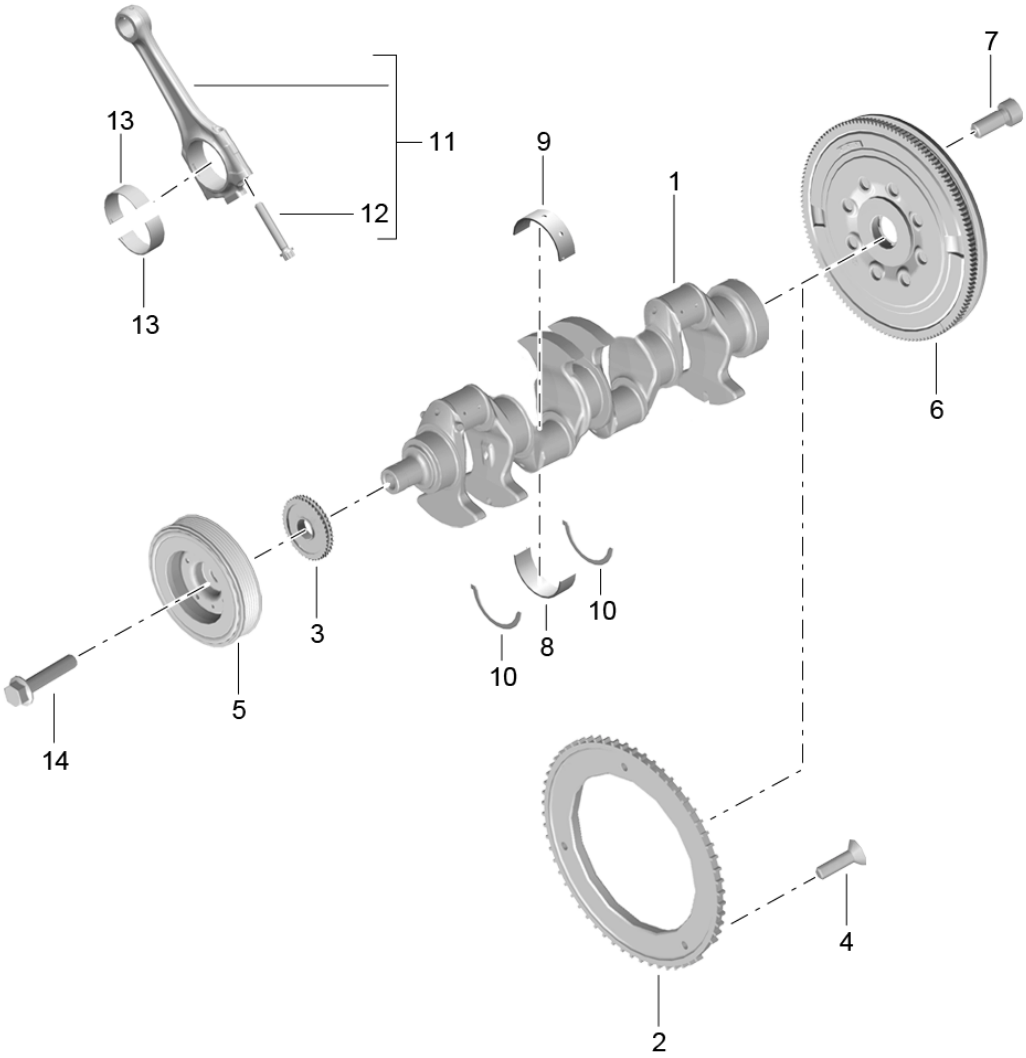

Model: 95B **Model life 2014>>**

Pos	Part Number	Description	Remark	Qty	Model
		Crankshaft			MCN.CC MCY.NA/NB/PA
		Connecting rod			
1	958 105 101 00	Crankshaft		1	
2	958 105 189 00	Washer Pulse sender		1	
3	958 105 209 00	Sprocket		1	
4	958 105 229 00	Countersunk-head screw M 6 X 16		1	
5	958 105 243 10	Vibration damper		1	
6	958 105 323 00	Drive plate		1	
7	N 906 650 01	Pan-head screw M 10 X 22,3		1	
8	958 101 243 00	Main bearing shell Lower Identification Red		5	
(8)	958 101 243 01	Main bearing shell Lower Identification Yellow		5	
(8)	958 101 243 02	Main bearing shell Lower Identification Blue		5	
(8)	958 101 243 03	Main bearing shell Lower Identification White		5	
(8)	958 101 243 04	Main bearing shell Lower Identification Violet		5	
(8)	958 101 243 05	Main bearing shell Lower Identification Black		5	
9	958 101 244 00	Main bearing shell Upper Identification Yellow		5	
(9)	958 101 244 01	Main bearing shell Upper Identification Red		5	
(9)	958 101 244 02	Main bearing shell Upper Identification Black		5	
(9)	958 101 244 03	Main bearing shell Upper Identification Violet		5	
(9)	958 101 244 04	Main bearing shell Upper Identification White		5	
10	WHT 000 033 H	Thrust washer 57,5 X 70,5 X 1,975		2	
11	958 198 401 00	Connecting rod Set Comprising:		1	
		Connecting rod		4	

Model: 95B **Model life 2014>>**

Pos	Part Number	Description	Remark	Qty	Model
12	WHT 001 319	Connecting rod bolt M 9 X 50		8	
13	958 105 701 00	Conrod bearing shell Identification Yellow		8	
(13)	958 105 701 01	Conrod bearing shell Identification Blue		8	
(13)	958 105 701 02	Conrod bearing shell Identification Red		8	
14	WHT 001 760	Hexagon-head bolt M 16 X 1,5 X 75		1	

Illustration: 102-30

PORSCHE

Model: 95B **Model life 2014>>**

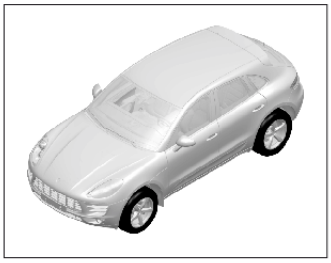

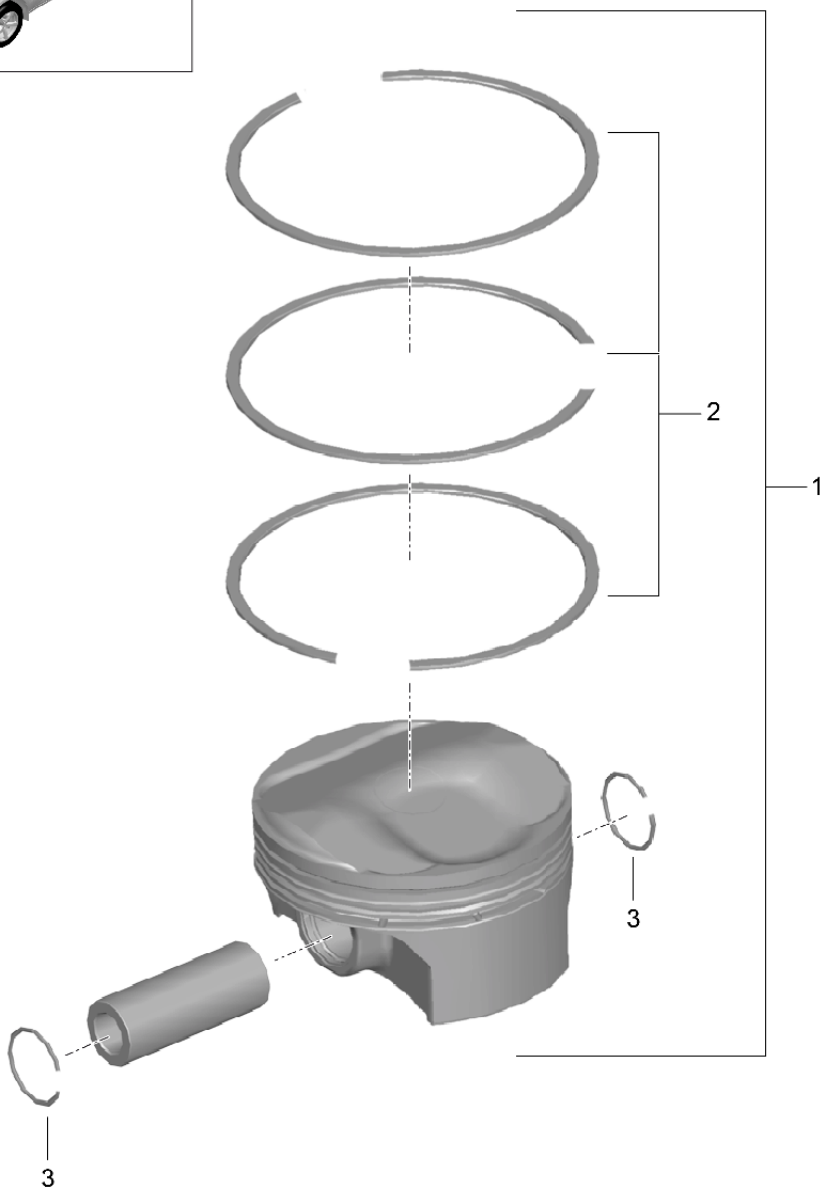

Model: 95B **Model life 2014>>**

Pos	Part Number	Description	Remark	Qty	Model
		Piston			MCT.LA/MA MDC.NA
		Piston rings			
1	946 103 060 07	Piston Tolerance range X Number plate - 568 - 573 G Cyl. 1 - 3 M >> CTM010870		3	MCT.MA
(1)	946 103 060 13	Piston Tolerance range X Number plate - 568 - 573 G Cyl. 1 - 3 M CTM010871 >> CTM020465		3	MCT.MA MDC.NA
(1)	946 103 060 19	Piston Tolerance range X Number plate - 568 - 573 G Cyl. 1 - 3 M CTM020466 >>		3	MCT.MA
(1)	946 103 060 39	Piston Tolerance range X Number plate - 556 - 561 G Cyl. 1 - 3 M >> CTL005137		3	MCT.LA
(1)	946 103 060 45	Piston Tolerance range X Number plate - 556 - 561 G Cyl. 1 - 3 M CTL005138 >> CTL009250		3	MCT.LA
(1)	946 103 060 51	Piston Tolerance range X Number plate - 556 - 561 G Cyl. 1 - 3 M CTL009251 >>		3	MCT.LA
(1)	946 103 060 08	Piston Tolerance range X Number plate + 573 - 578 G Cyl. 1 - 3 M >> CTM010870		3	MCT.MA
(1)	946 103 060 14	Piston Tolerance range X Number plate		3	

Model: 95B **Model life 2014>>**

Pos	Part Number	Description	Remark	Qty	Model
		+ 573 - 578 G Cyl. 1 - 3 M CTM010871 >> CTM020465			MCT.MA
(1)	946 103 060 20	Piston Tolerance range X Number plate		3	MDC.NA
		+ 573 - 578 G Cyl. 1 - 3 M CTM020466 >>			MCT.MA
(1)	946 103 060 40	Piston Tolerance range X Number plate		3	
		+ 561 - 566 G Cyl. 1 - 3 M >> CTL005137			MCT.LA
(1)	946 103 060 46	Piston Tolerance range X Number plate		3	
		+ 561 - 566 G Cyl. 1 - 3 M CTL005138 >> CTL009250			MCT.LA
(1)	946 103 060 52	Piston Tolerance range X Number plate		3	
		+ 561 - 566 G Cyl. 1 - 3 M CTL009251 >>			MCT.LA
(1)	946 103 061 07	Piston Tolerance range X Number plate		3	
		- 568 - 573 G Cyl. 4 - 6 M >> CTM010870			MCT.MA
(1)	946 103 061 13	Piston Tolerance range X Number plate		3	
		- 568 - 573 G Cyl. 4 - 6 M CTM010871 >> CTM020465			MCT.MA
(1)	946 103 061 19	Piston Tolerance range X Number plate		3	MDC.NA
		- 568 - 573 G Cyl. 4 - 6 M CTM020466 >>			MCT.MA
(1)	946 103 061 39	Piston Tolerance range X		3	

Model: 95B **Model life 2014>>**

Pos	Part Number	Description	Remark	Qty	Model
		Number plate - 556 - 561 G Cyl. 4 - 6 M >> CTL005137			MCT.LA
(1)	946 103 061 45	Piston Tolerance range X Number plate - 556 - 561 G Cyl. 4 - 6 M CTL005138 >> CTL009250		3	MCT.LA
(1)	946 103 061 51	Piston Tolerance range X Number plate - 556 - 561 G Cyl. 4 - 6 M CTL009251 >>		3	MCT.LA
(1)	946 103 061 08	Piston Tolerance range X Number plate + 573 - 578 G Cyl. 4 - 6 M >> CTM010870		3	MCT.MA
(1)	946 103 061 14	Piston Tolerance range X Number plate + 573 - 578 G Cyl. 4 - 6 M CTM010871 >> CTM020465		3	MCT.MA MDC.NA
(1)	946 103 061 20	Piston Tolerance range X Number plate + 573 - 578 G Cyl. 4 - 6 M CTM020466 >>		3	MCT.MA
(1)	946 103 061 40	Piston Tolerance range X Number plate + 561 - 566 G Cyl. 4 - 6 M >> CTL005137		3	MCT.LA
(1)	946 103 061 46	Piston Tolerance range X Number plate + 561 - 566 G Cyl. 4 - 6 M CTL005138 >> CTL009250		3	MCT.LA
(1)	946 103 061 52	Piston Tolerance range		3	

Model: 95B **Model life 2014>>**

Pos	Part Number	Description	Remark	Qty	Model
		X Number plate + 561 - 566 G Cyl. 4 - 6 M CTL009251 >>			MCT.LA
2	946 103 941 00	Set of piston rings M >> CTM010870 M >> CTL005137		6	 MCT.MA MCT.LA
(2)	948 103 941 21	Set of piston rings		6	
(2)	946 103 941 40	Set of piston rings M CTM010871 >> M CTL005138 >>		6	MDC.NA MCT.MA MCT.LA
3	948 103 341 00	Circlip		12	

Illustration: 102-40

PORSCHE

Model: 95B **Model life 2014>>**

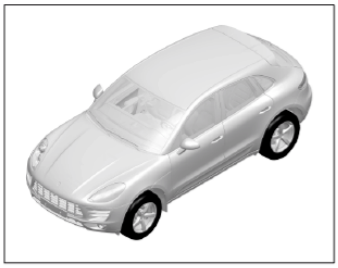

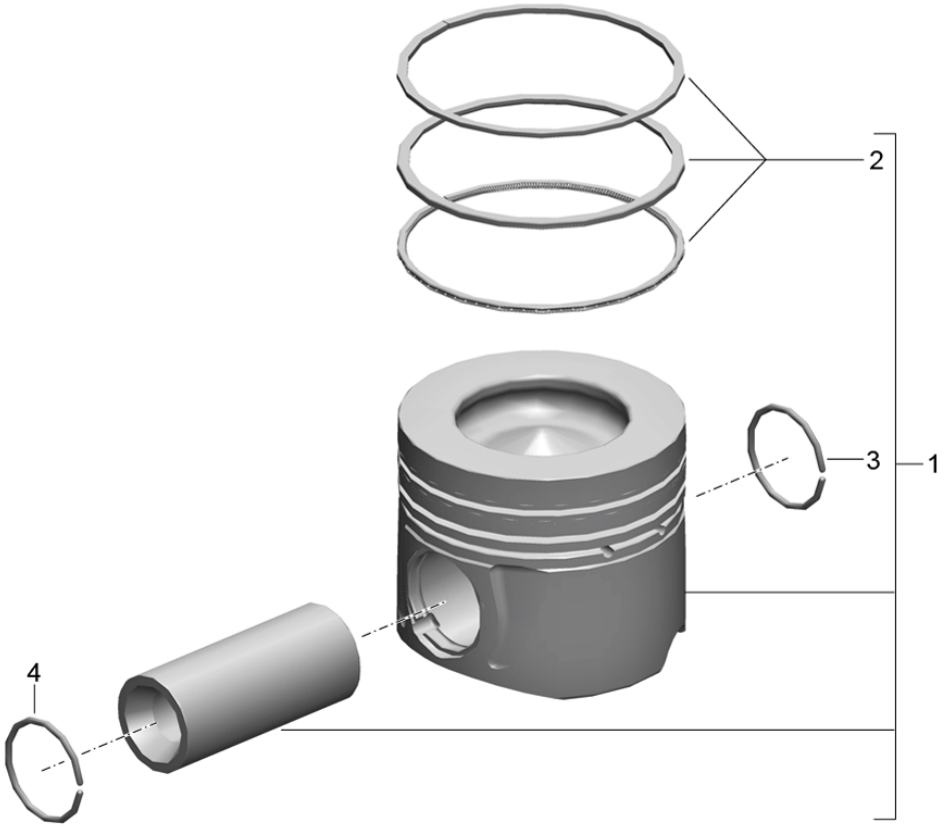

Model: 95B **Model life 2014>>**

Pos	Part Number	Description	Remark	Qty	Model
		Piston			MCD.UD MCT.BA/BB/BC
		Piston rings			
1	958 103 034 10	Piston Complete	-14	6	MCD.UD
(1)	958 103 034 20	Piston Complete	15-	6	MCD.UD MCT.BA/BB/BC
2	958 103 927 00	Set of piston rings	-14	6	MCD.UD
(2)	958 103 927 10	Set of piston rings	15-	6	MCD.UD MCT.BA/BB/BC
3	955 103 441 00	Circlip 30 X 2		6	
4		Circlip 30 X 2		6	

Illustration: 102-50

PORSCHE

Model: 95B **Model life 2014>>**

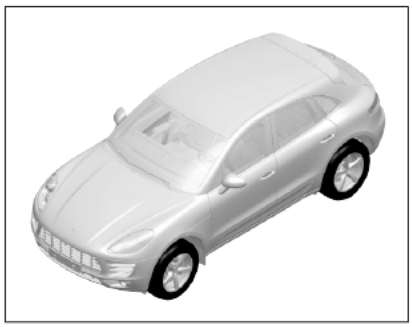

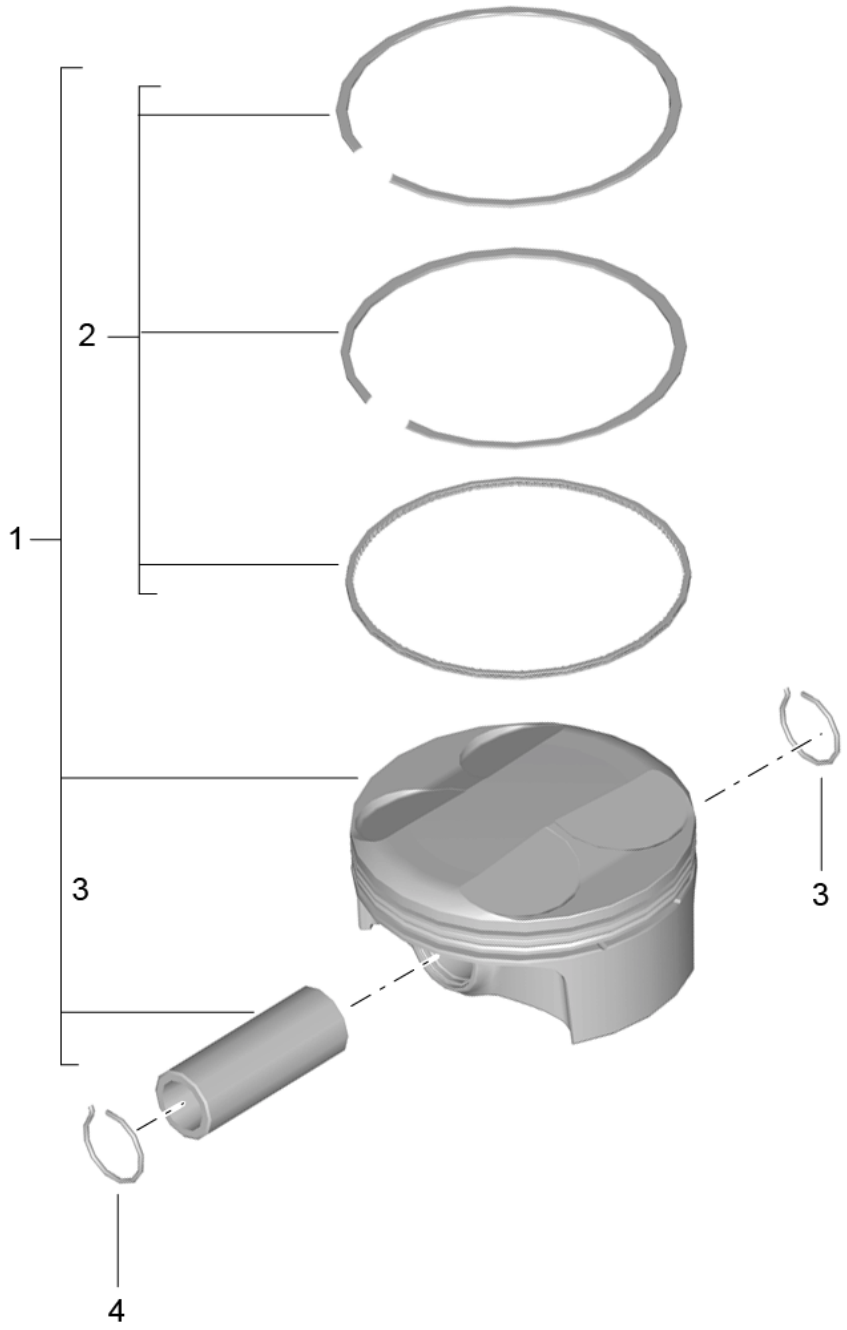

Model: 95B **Model life 2014>>**

Pos	Part Number	Description	Remark	Qty	Model
		Piston			MCN.CC MCY.NA/NB/PA
		Piston rings			
1	958 107 065 00	Piston Complete		4	MCN.CC
(1)	958 107 065 10	Piston Complete		4	MCY.NA
(1)	958 107 065 20	Piston Complete		4	MCY.NB/PA
2	958 198 151 00	Set of piston rings		4	MCN.CC
(2)	958 198 151 10	Set of piston rings		4	MCY.NA
(2)	958 198 151 20	Set of piston rings		4	MCY.NB/PA
3	N 911 766 01	Circlip 23 X 1.5		4	
4		Circlip 23 X 1.5		4	

Illustration: 102-60

PORSCHE

Model: 95B **Model life 2014>>**

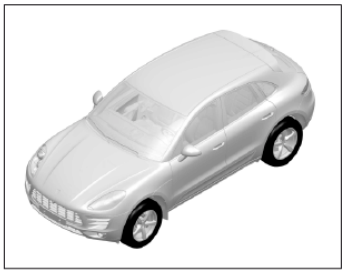

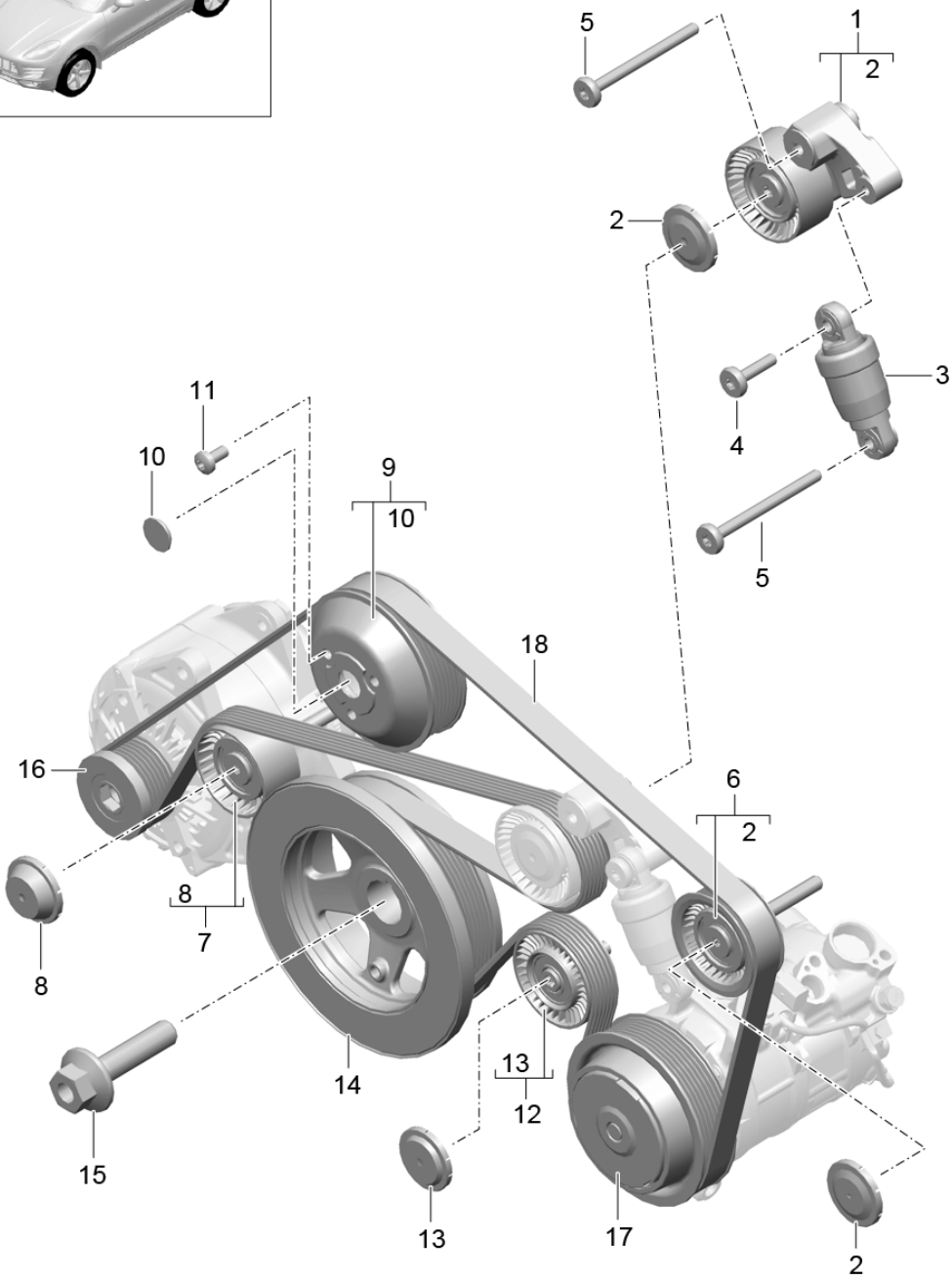

Illustration: 102-60

Model: 95B **Model life 2014>>**

Pos	Part Number	Description	Remark	Qty	Model
		Belt tensioner			MCT.LA/MA MDC.NA
		Belt drive			
1	948 102 403 75	Lever with Tensioning roller		1	
2	948 102 839 00	Protection cap		2	
3	948 102 261 75	Tensioner Hydraulic		1	
4	999 073 246 02	Outer hexagon round screw M 8 X 33		1	
5	999 073 329 09	Torx screw M 8 X 96		2	
6	7PP 145 279	Deflection roller with Fastening screw And Protection cap		1	
7	946 102 118 30	Deflection roller with Fastening screw And Protection cap		1	
8	03F 903 310	Protection cap		1	
9	946 106 091 75	Pulley Water pump		1	
10	948 106 419 00	Lid		1	
11	999 073 104 01	Torx screw M 8 X 16		3	
12	946 102 117 30	Deflection roller with Fastening screw And Protection cap		1	
13	03G 145 291	Protection cap		1	
14	946 102 241 75	Vibration damper Crankshaft M >> CTL011539 M >> CTM027077		1	
15	948 102 202 10	Hexagon-head bolt M 18 X 1,5 X 72,1		1	
16		Pulley Generator See illustrations 9/02/05 POS.7		1	
17		Compressor Air conditioner See illustrations 8/13/45 POS.1		1	
18	946 102 252 30	V-belt 6 PK 2526		1	

Illustration: 102-70

PORSCHE

Model: 95B **Model life 2014>>**

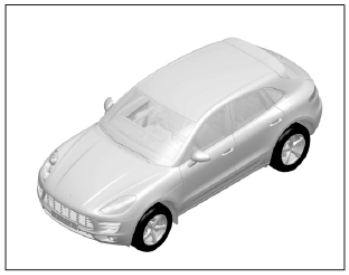

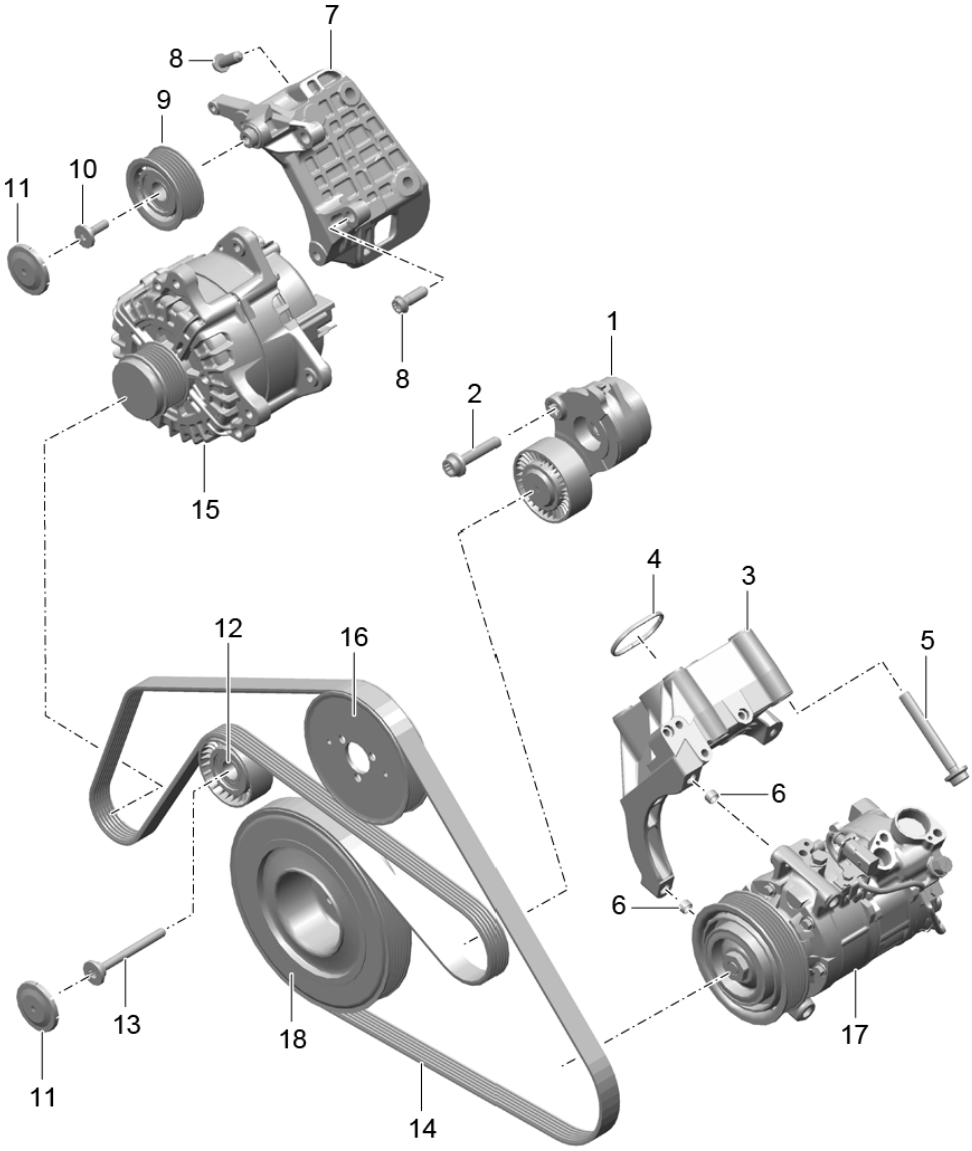

Model: 95B **Model life 2014>>**

Pos	Part Number	Description	Remark	Qty	Model
		Belt tensioner			MCD.UD MCT.BA/BB/BC
		Belt drive			
1	958 102 361 51	Belt tensioner		1	
2	N 107 610 01	Pan-head screw M 10 X 48		1	
3	958 147 151 20	Bracket Compressor Air conditioner		1	
(3)	958 147 151 21	Bracket Compressor Air conditioner		1	
4	958 147 661 00	Gasket		1	
5	N 107 156 01	Pan-head screw M 10 X 80		4	
6	958 147 501 00	Dowel sleeve 11,15 X 6,5		2	
7	958 603 252 20	Bracket Generator		1	
8	N 911 831 01	Pan-head screw M 10 X 29		4	
9	955 102 118 01	Deflection roller		1	
10	N 911 857 01	Fit bolt M 8 X 10 X 25		1	
11	955 102 839 00	Protection cap		2	
(11)	955 102 839 01	Protection cap		2	
12	955 102 119 21	Deflection roller		1	
13	N 911 793 01	Fit bolt M 8 X 15 X 82		1	
14	059 903 137 AG	V-belt 6 PK 21,36 X 2414		1	
15		Generator See illustrations 9/02/05 POS.6		1	
16		Pulley Water pump See illustrations 1/05/05 POS.3		1	
17		Compressor Air conditioner See illustrations 8/13/45 POS.1		1	
18		Vibration damper Crankshaft See illustrations 1/02/10 POS.4		1	

Illustration: 102-80

PORSCHE

Model: 95B **Model life 2014>>**

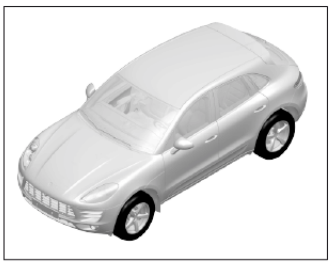

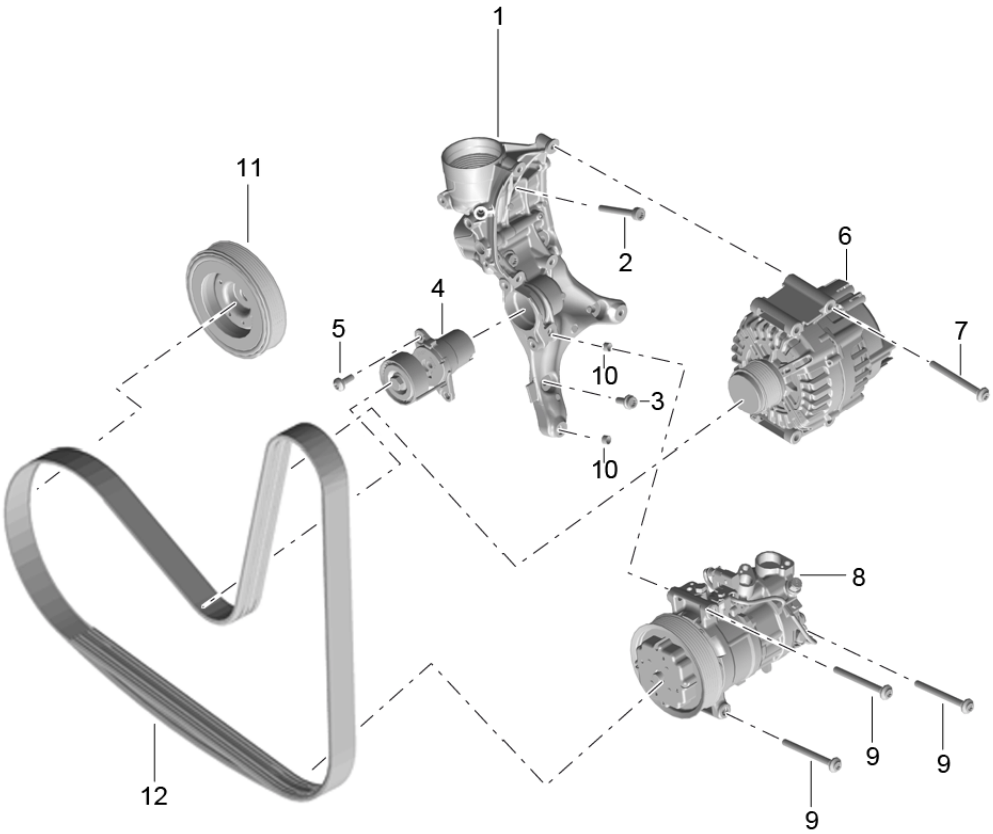

Illustration: 102-80

Model: 95B **Model life 2014>>**

Pos	Part Number	Description	Remark	Qty	Model
		Belt tensioner			MCN.CC MCY.NA/NB/PA
		Belt drive			
1	958 147 151 40	Bracket Generator And Compressor		1	
2	N 910 455 02	Pan-head screw M 8 X 65		3	
3	N 106 648 01	Pan-head screw M 8 X 20		2	
4	958 102 361 70	Belt tensioner		1	
5	N 107 663 01	Torx screw Aluminium M 8 X 20		2	
6		Generator See illustrations 9/02/05 POS.7		1	
7	N 107 655 01	Torx screw Aluminium M 8 X 85		4	
8		Compressor Air conditioner See illustrations 8/13/55 POS.1		1	
9	N 107 655 01	Torx screw Aluminium M 8 X 85		3	
10	958 147 501 00	Dowel sleeve		2	
11		Vibration damper Crankshaft See illustrations 1/02/20 POS.5		1	
12	06L 903 137 A	Poly-rib belt 6 PK 1132 +- 5 MM		1	

Illustration: 103-00

PORSCHE

Model: 95B **Model life 2014>>**

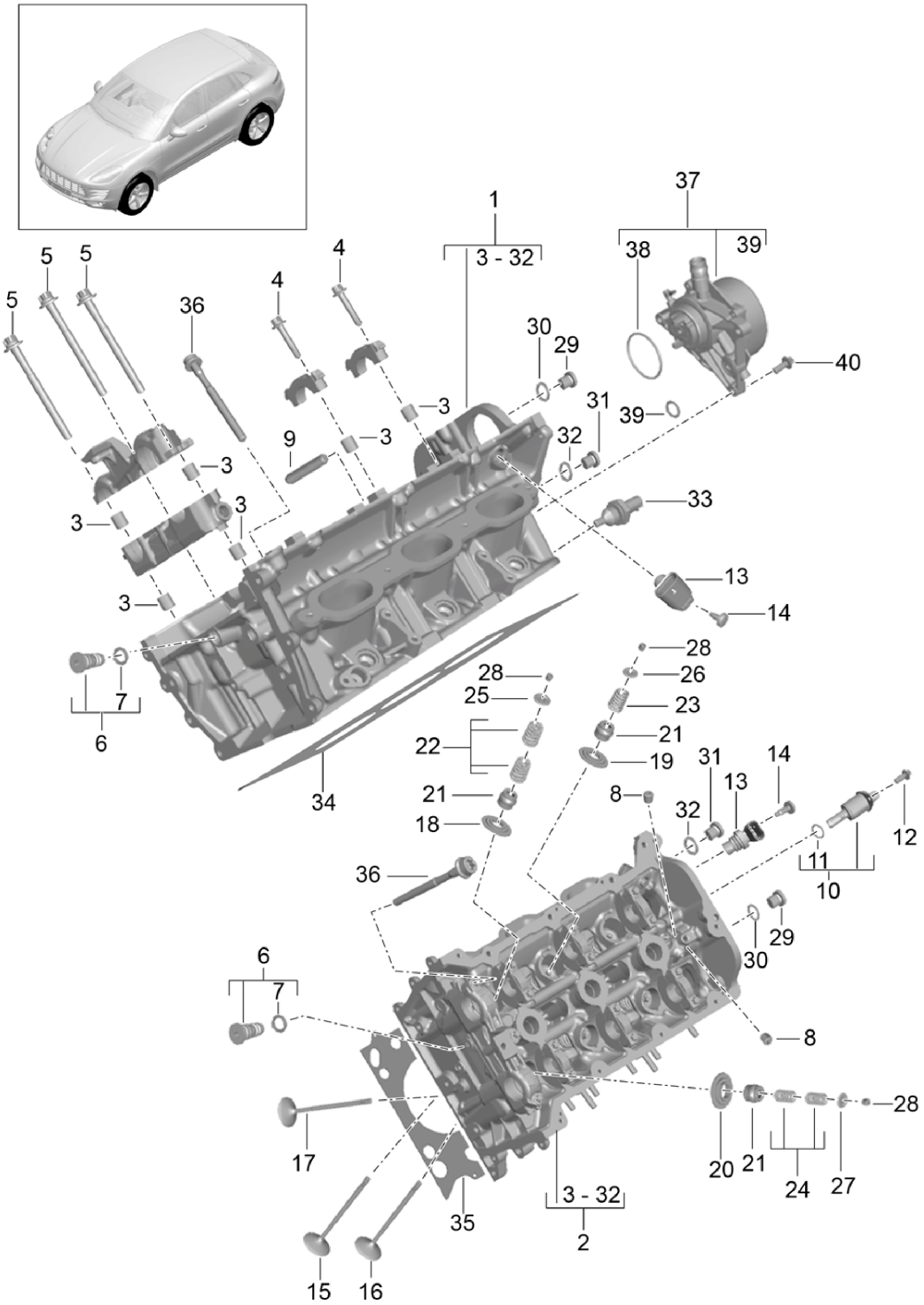

Model: 95B **Model life 2014>>**

Pos	Part Number	Description	Remark	Qty	Model
		Cylinder head			MCT.LA/MA MDC.NA
		Vacuum pump			
1	946 104 015 78	Cylinder head with Spark plug Cyl. 1 - 3	-14	1	
(1)	946 104 015 79	Cylinder head with Spark plug Cyl. 1 - 3	15-	1	
2	946 104 016 78	Cylinder head with Spark plug Cyl. 4 - 6	-14	1	
(2)	946 104 016 79	Cylinder head with Spark plug Cyl. 4 - 6	15-	1	
3	944 104 361 00	Dowel sleeve 8,5 X 1 X 8,5		30	
(3)	999 095 071 00	Dowel sleeve 12 X 1 X 10		2	
4	999 073 363 01	Torx screw M 6 X 35		24	
5	900 385 027 01	Torx screw BM 6 X 70		6	
6	948 104 250 01	Restrictor		2	
7	999 707 577 40	O-ring 10,0 X 2,5		2	
8	900 063 010 00	Screw plug M 8 X 1		4	
9	999 060 001 01	Threaded bolt MFS 8 X 42		18	
10	948 105 308 03	Actuator Valve		2	
11	999 701 582 40	O-ring 11,5 X 1,8		2	
12	900 385 112 01	Torx screw BM 5 X 12		4	
13	946 606 106 00	Hall sender		4	
14	999 073 902 31	Oval-head screw Aluminium M 6 X 16		4	
15	948 105 321 02	Intake valve Uncoated LÄNGE 107,7 MM		6	
16	948 105 321 15	Intake valve Coated LÄNGE 112,8 MM		6	
17	948 105 322 52	Exhaust valve		12	
18	948 105 151 01	Concave washer Lower Intake		6	
19	948 105 153 51	Concave washer Lower Intake		6	
20		Concave washer Lower Exhaust		12	
21	996 105 115 52	Valve stem seal		24	
22	948 105 094 02	Set of valve springs Intake		6	

Model: 95B **Model life 2014>>**

Pos	Part Number	Description	Remark	Qty	Model
23	946 105 416 00	Valve spring Intake		6	
24	948 105 095 52	Set of valve springs Exhaust		12	
25	948 105 150 01	Concave washer Upper Intake		6	
26	948 105 152 51	Concave washer Upper Intake		6	
27		Concave washer Upper Exhaust		12	
28	996 105 123 52	Valve collet		48	
29	900 219 023 01	Screw plug M 10 X 1		2	
30	900 123 144 30	Sealing ring A 10 X 13,5		2	
31	900 219 006 01	Screw plug M 12 X 1,5		2	
32	900 123 005 30	Sealing ring A 12 X 16		2	
33	948 606 420 00	Temperature sensor Water cooling		1	
34	946 104 173 01	Cylinder head gasket Cyl. 1 - 3	-14	1	
(34)	946 104 173 02	Cylinder head gasket Cyl. 1 - 3	15-	1	
35	946 104 174 01	Cylinder head gasket Cyl. 4 - 6	-14	1	
(35)	946 104 174 02	Cylinder head gasket Cyl. 4 - 6	15-	1	
36	948 104 181 10	Pan-head screw M 11 X 1,5 X 140		16	
37	948 110 050 06	Vacuum pump		1	
38	999 707 581 41	O-ring 54 X 3		1	
39	999 707 582 41	O-ring 13 X 3		1	
40	900 385 072 01	Torx screw M 6 X 25		3	

Illustration: 103-05

Model: 95B **Model life 2014>>**

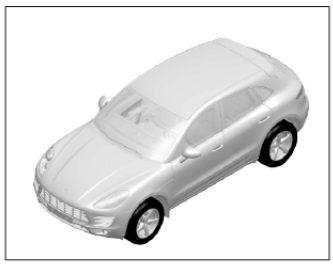

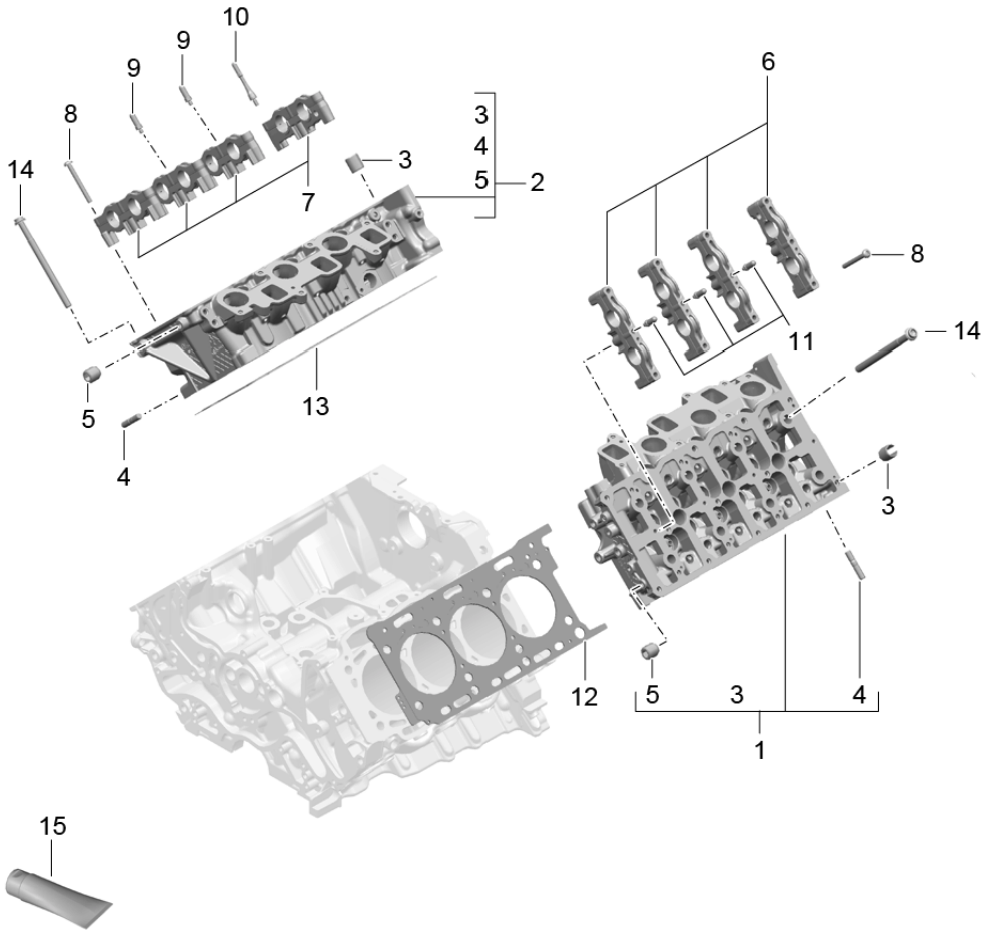

Illustration: 103-05

Model: 95B **Model life 2014>>**

Pos	Part Number	Description	Remark	Qty	Model
		Cylinder head			MCD.UD MCT.BA/BB/BC
1	958 104 016 21	Cylinder head Complete Cyl. 4 - 6		1	MCD.UD
(1)	958 104 016 22	Cylinder head Complete Cyl. 4 - 6		1	MCT.BA/BB/BC
2	958 104 015 21	Cylinder head Complete Cyl. 1 - 3		1	MCD.UD
(2)	958 104 015 22	Cylinder head Complete Cyl. 1 - 3		1	MCT.BA/BB/BC
3	958 104 429 10	Dowel sleeve 8 X 9		4	
4	N 044 408 7	Stud M 8 X 25		16	
5	N 102 833 04	Screw plug M 8 X 1		2	
6	958 104 959 00	Housing Set Cyl. 4 - 6		1	
7	958 104 960 00	Housing Set Cyl. 1 - 3		1	
8	N 106 165 01	Oval-head screw M 6 X 56		24	
9	958 104 564 00	Ball head M 5 X 6 Cyl. 1 - 3		2	
10	958 104 564 10	Ball head M 6 X 12 Cyl. 1 - 3		1	
11	958 104 564 00	Ball head M 5 X 6 Cyl. 4 - 6		3	
12	958 104 173 11	Cylinder head gasket 1,58 MM 1 LOCH		X	
(12)	958 104 173 21	Cylinder head gasket 1,63 MM 2 LÖCHER		X	
(12)	958 104 173 31	Cylinder head gasket 1,68 MM 3 LÖCHER		X	
13	958 104 174 11	Cylinder head gasket 1,58 MM 1 LOCH		X	
(13)	958 104 174 21	Cylinder head gasket 1,63 MM 2 LÖCHER		X	
(13)	958 104 174 31	Cylinder head gasket 1,68 MM 3 LÖCHER		X	
14	WHT 005 262 A	Combination screw M 12 X 1,5 X 177		16	
15	000 043 300 39	Sealing compound 1 tube 50 ML		X	

Illustration: 103-10

PORSCHE

Model: 95B **Model life 2014>>**

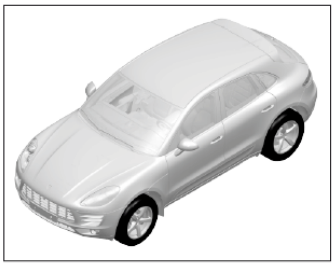

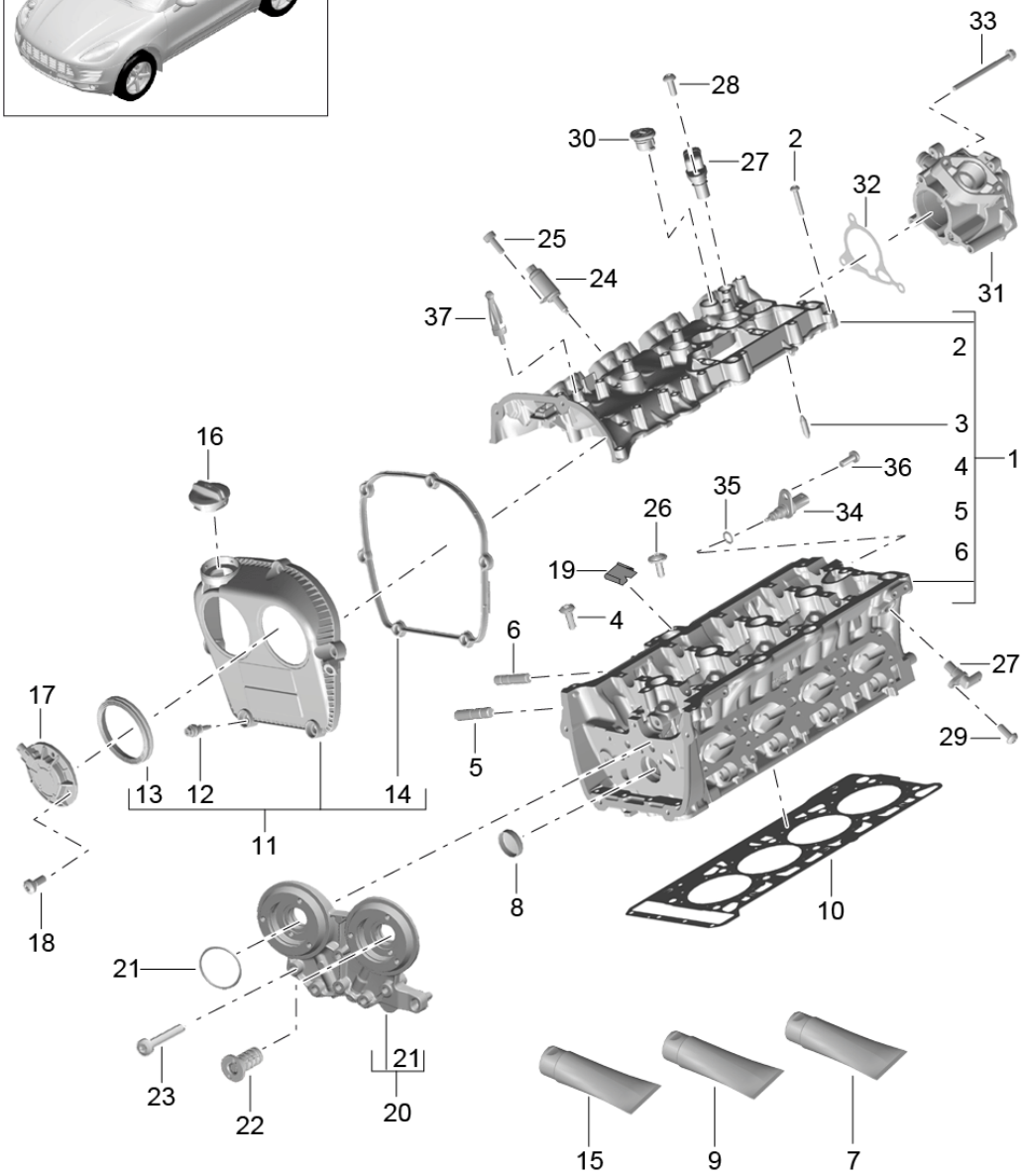

Model: 95B **Model life 2014>>**

Pos	Part Number	Description	Remark	Qty	Model
		Cylinder head			MCN.CC MCY.NA/NB/PA
1	958 103 063 00	Cylinder head Complete		1	MCN.CC
(1)	958 103 063 10	Cylinder head Complete		1	MCY.NA/NB/PA
2	N 105 540 05	Oval-head screw M 6 X 35		22	
3	955 104 251 00	Dowel sleeve M 8 X 32		2	
4	WHT 005 305	Pan-head screw M 10 X 115 X 85		10	
5	N 912 317 01	Stud M 8 X 25		4	
6	N 107 702 01	Stud M 6 X 40		2	
7	958 110 503 00	Sealing compound 1 100-gramme tube for POS.1		X	
8	958 103 113 00	Lid 36,6		1	
9	958 101 901 00	Sealing compound 18ML for POS.8		X	
10	958 103 383 00	Cylinder head gasket		1	
(10)	958 103 383 10	Cylinder head gasket		1	
11	958 103 269 00	Control box cover Upper		1	
12	958 105 343 00	Fastening part		6	
13	958 103 583 00	Gasket Magnet		2	
14	958 103 483 00	Gasket Control box cover		1	
15	000 043 207 49	Sealing compound 80 ML for POS.11		X	
(15)	000 043 300 39	Sealing compound 50 ML for POS.11		X	
16	958 103 485 00	Lid Oil		1	
17	958 109 259 00	Magnet		2	
(17)	958 109 259 10	Magnet		2	
18	N 107 512 01	Outer hexagon round screw M 6 X 14		6	
19	958 103 411 00	Separator for mounting		4	
20	958 103 144 00	Bearing bracket Use also: WHT.007.212		1 2	
(20)	958 103 144 10	Bearing bracket Use also: 9A7.007.212.00		1 2	
21	WHT 007 212	O-ring 52 X 3 Together with 958.103.144.00		2	
(21)	9A7 007 212 00	O-ring 52 X 3		2	

Model: 95B **Model life 2014>>**

Pos	Part Number	Description	Remark	Qty	Model
		Together with 958.103.144.10			
22	958 109 257 00	Actuator		2	
23	N 912 328 01	Outer hexagon round screw M 6 X 52		6	
24	958 103 697 00	Actuator		8	
(24)	958 103 697 01	Actuator		8	
25	N 106 225 02	Pan-head screw M 5 X 12		8	
26	N 101 562 06	Oval-head screw M 6 X 30		4	
27	958 907 601 00	Pulse sender		2	
28	N 106 549 02	Round head screw M 6 X 16		1	
29	N 104 514 05	Round head screw M 6 X 16		1	
30	958 115 418 10	Stopper M 6 X 16		1	
31	958 145 100 00	Vacuum pump		1	
32	958 103 121 00	Gasket		1	
33	N 107 394 01	Hexagon-head bolt M 6 X 90		4	
34	958 606 623 20	Temperature sensor		1	
35	WHT 002 287 B	O-ring		1	
36	N 910 967 01	Round head screw		1	
37	WHT 005 404	Ball pin M 6 X 12		2	

Illustration: 103-15

PORSCHE

Model: 95B **Model life 2014>>**

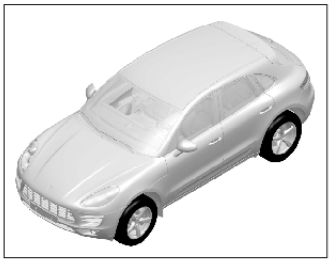

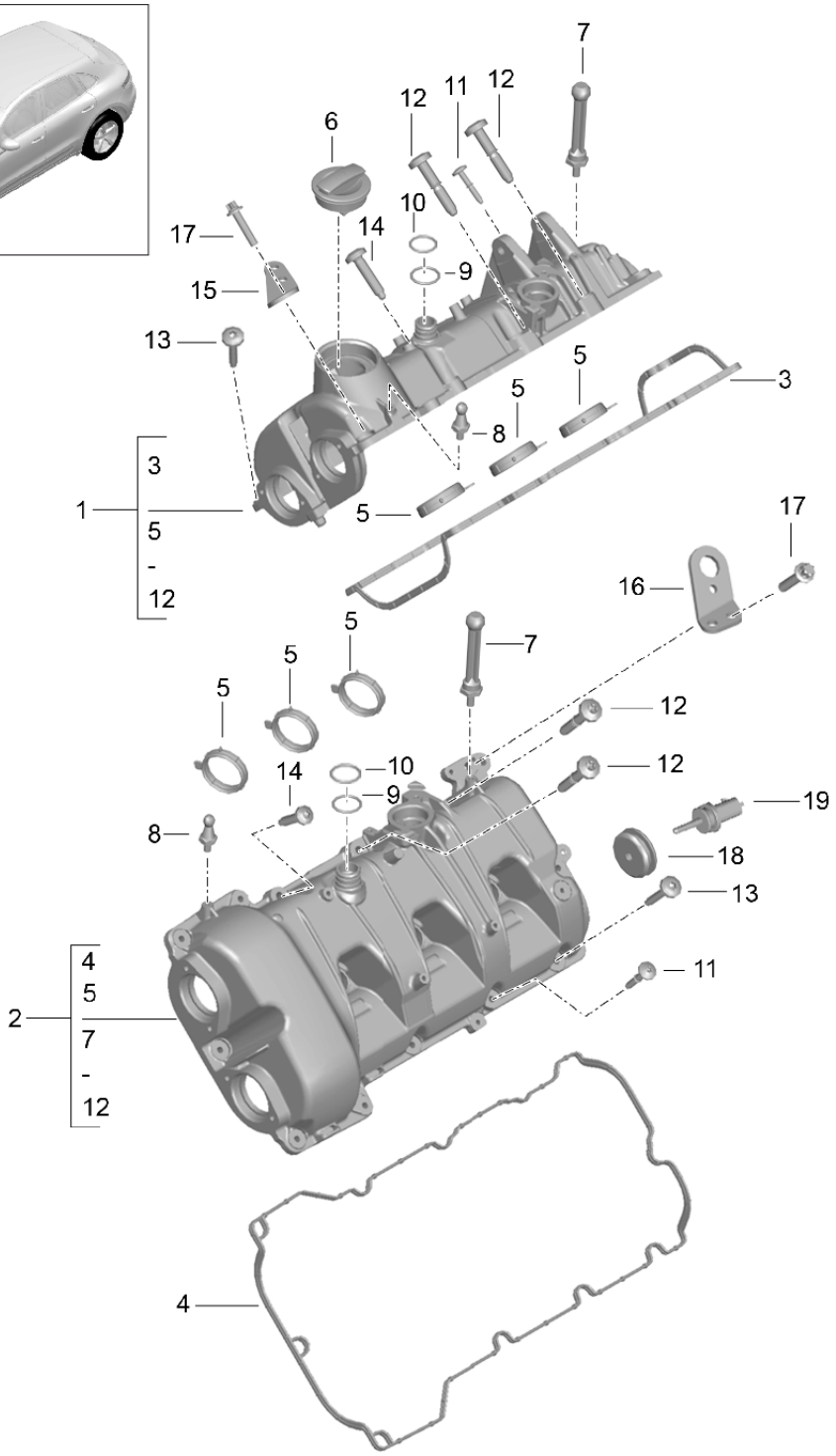

Model: 95B **Model life 2014>>**

Pos	Part Number	Description	Remark	Qty	Model
		Valve cover			MCT.LA/MA MDC.NA
1	946 105 135 39	Valve cover Cyl. 1 - 3 M >> CTM003553 M >> CTL002423		1	MCT.LA/MA
(1)	946 105 135 45	Valve cover Cyl. 1 - 3 M CTM003554 >> M CTL002424 >>		1	MCT.LA/MA
(1)		Valve cover Cyl. 1 - 3		1	MDC.NA
2	946 105 136 64	Valve cover Cyl. 4 - 6 M >> CTM003553 M >> CTL002423		1	MCT.LA/MA
(2)	946 105 136 65	Valve cover Cyl. 4 - 6 M CTM003554 >> M CTL002424 >>		1	MCT.LA/MA
3	946 105 935 60	Gasket Cyl. 1 - 3		1	
(3)	946 105 935 65	Gasket Cyl. 1 - 3		1	
4	946 105 936 60	Gasket Cyl. 4 - 6		1	
(4)	946 105 936 65	Gasket Cyl. 4 - 6		1	
5	946 105 937 60	Gasket Inner		6	
(5)	946 105 937 65	Gasket Inner		6	
6	958 104 485 10	Lid		1	
7	999 167 056 90	Ball pin 15		2	
8	999 167 055 90	Ball pin 10		2	
9	999 707 677 41	O-ring 22,5 X 2,5		2	
10	999 707 677 40	O-ring 22,5 X 2,5		2	
11	999 073 581 01	Round head screw M 6 X 36 M >> CTM003553 M >> CTL002423		4	
12	999 073 582 01	Round head screw M 8 X 44 M >> CTM003553 M >> CTL002423		4	
13	999 073 905 31	Oval-head screw Aluminium M 6 X 30 M >> CTM003553 M >> CTL002423		13	
(13)		Oval-head screw Aluminium M 6 X 30 M CTM003554 >> M CTL002424 >>		17	MDC.NA
14	999 073 908 31	Oval-head screw Aluminium M 8 X 35		3	

Model: 95B **Model life 2014>>**

Pos	Part Number	Description	Remark	Qty	Model
		M >> CTM003553			
		M >> CTL002423			
(14)		Oval-head screw		7	MDC.NA
		Aluminium			
		M 8 X 35			
		M CTM003554 >>			
		M CTL002424 >>			
15	948 104 305 21	Shackle for transportation		1	
16	946 104 306 00	Shackle for transportation		1	
17	900 385 042 01	Torx screw		4	
		M 8 X 35			
18	993 110 530 01	Grommet		1	
		Temperature sensor			
19	997 606 213 00	Temperature sensor		1	
		Engine compartment			

Illustration: 103-20

PORSCHE

Model: 95B **Model life 2014>>**

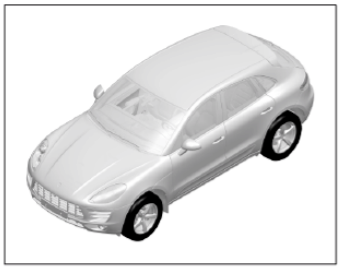

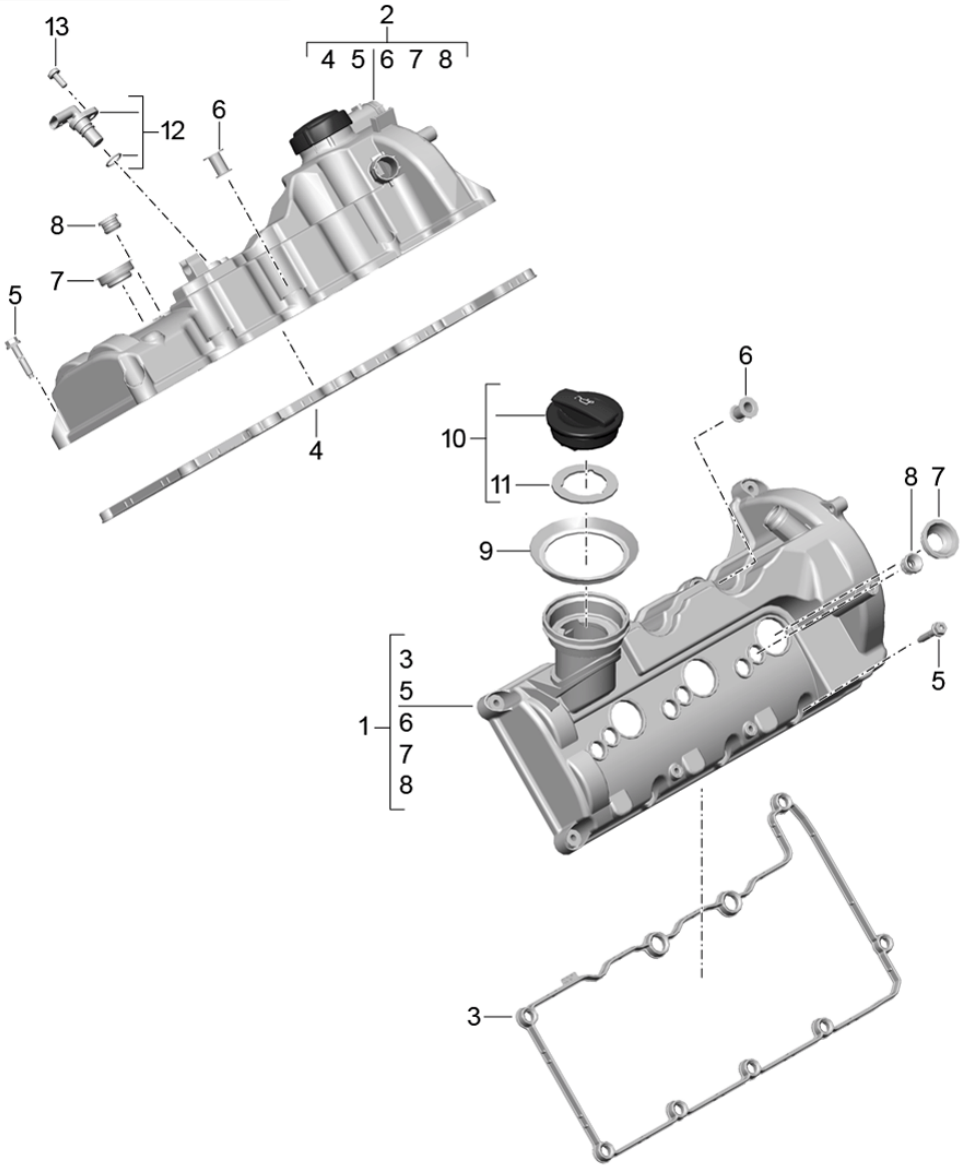

Illustration: 103-20

PORSCHE

Model: 95B **Model life 2014>>**

Pos	Part Number	Description	Remark	Qty	Model
		Valve cover			MCD.UD MCT.BA/BB/BC
1	958 105 135 11	Valve cover Cyl. 4 - 6		1	
2	958 105 136 11	Valve cover Cyl. 1 - 3		1	
3	958 105 231 10	Gasket Cyl. 4 - 6		1	
4	958 105 232 10	Gasket Cyl. 1 - 3		1	
5	958 105 343 00	Fastening part		14	
6	958 105 343 11	Fastening part		4	
(6)	958 105 343 10	Fastening part		4	
7	958 105 585 00	Shaft sealing ring 37 X 13		6	
8	958 105 631 00	Grommet		12	
9	958 107 287 00	Sealing ring		1	
10	958 104 485 10	Lid		1	
11	958 104 536 00	Gasket		1	
12	958 606 106 01	Pulse sender		1	
13	N 104 056 04	Oval-head screw M 6 X 14		1	

Illustration: 103-30

PORSCHE

Model: 95B **Model life 2014>>**

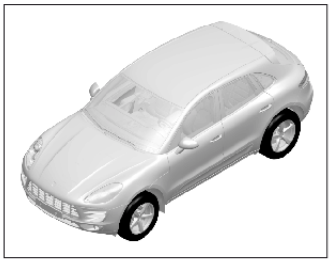

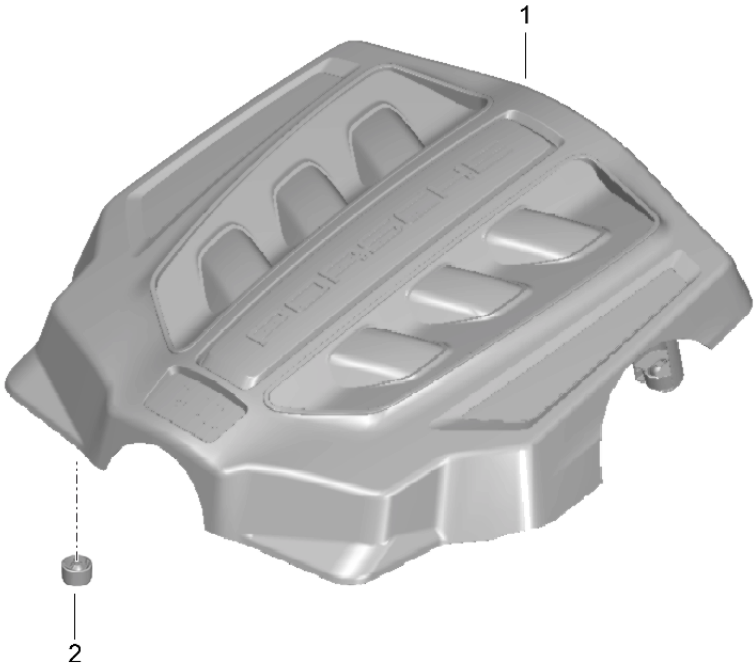

Illustration: 103-30

Model: 95B **Model life 2014>>**

Pos	Part Number	Description	Remark	Qty	Model
		Engine cover			
1	95B 103 925 D	Engine cover		1	MCT.MA
(1)	95B 103 925 F	Engine cover		1	MDC.NA
(1)	95B 103 925 E	Engine cover		1	MCT.LA
(1)	95B 103 925 A	Engine cover		1	MCD.UD MCT.BA/BB/BC
(1)	95B 103 925	Engine cover	-16	1	MCN.CC MCY.NA
(1)	95B 103 925 H	Engine cover	17-	1	MCY.NB/PA
2	06J 103 226	Ball socket		2	MCT.LA/MA MDC.NA
		Engine cover Front			
(2)		Ball socket		4	MCN.CC MCY.NA
		Engine cover			
(2)	955 110 236 20	Ball socket		2	MCT.LA/MA MDC.NA
		Engine cover Rear			
(2)		Ball socket		4	MCD.UD MCT.BA/BB/BC
		Engine cover			

Illustration: 103-40

PORSCHE

Model: 95B **Model life 2014>>**

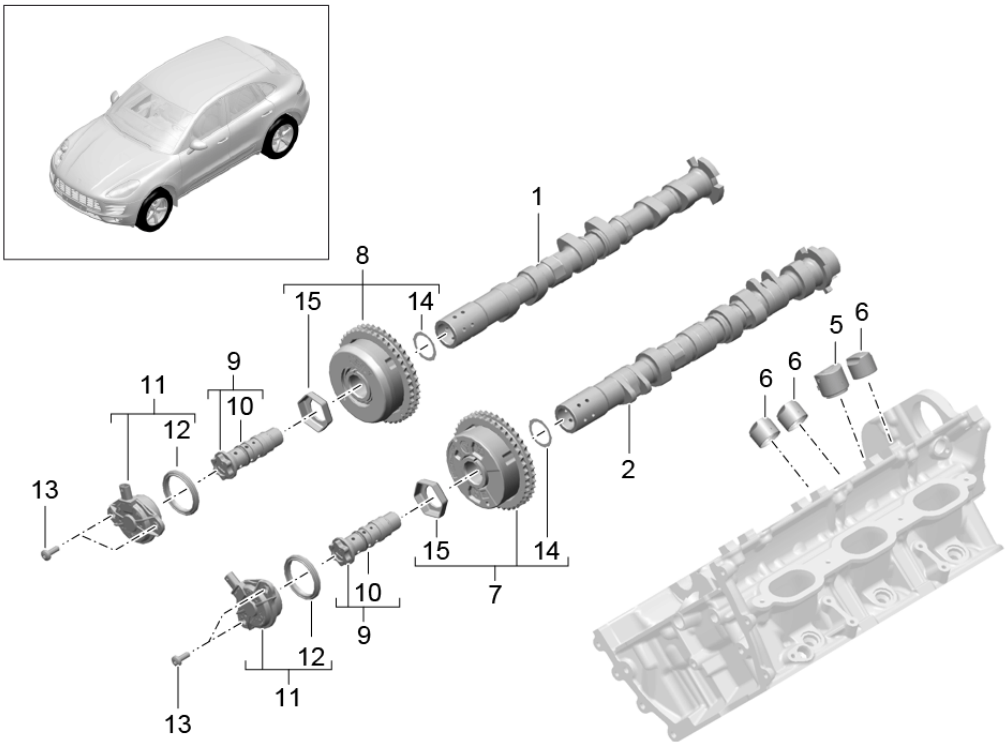

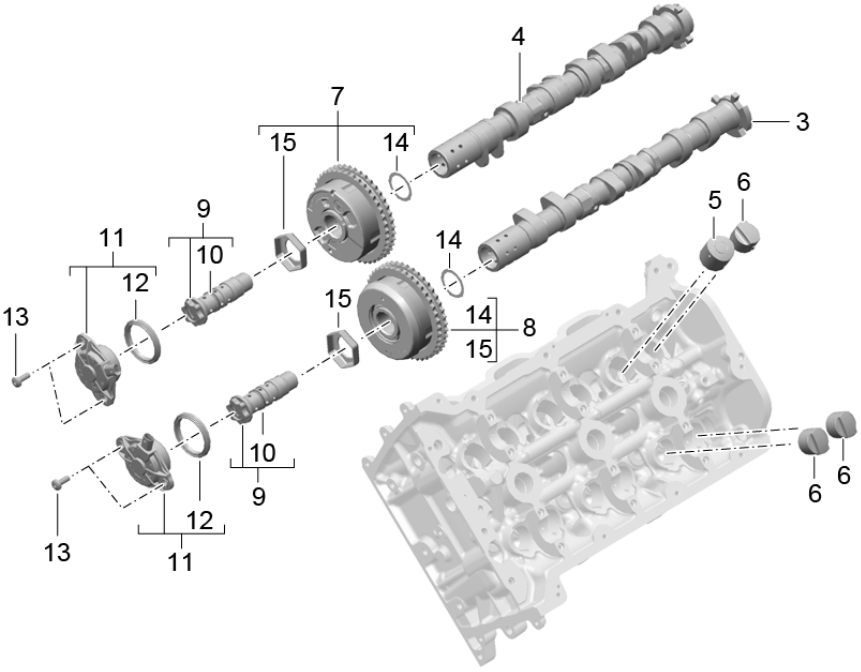

Model: 95B **Model life 2014>>**

Pos	Part Number	Description	Remark	Qty	Model
		Camshaft			MCT.LA/MA MDC.NA
1	946 105 242 60	Camshaft Exhaust Cyl. 1 - 3 M >> CTM042345 M >> CTL016041		1	
(1)	946 105 242 61	Camshaft Exhaust Cyl. 1 - 3 M CTM042346 >> M CTL016042 >>		1	MDC.NA
2	946 105 241 60	Camshaft Intake Cyl. 1 - 3 M >> CTM042345 M >> CTL016041		1	
(2)	946 105 241 61	Camshaft Intake Cyl. 1 - 3 M CTM042346 >> M CTL016042 >>		1	MDC.NA
3	946 105 244 60	Camshaft Exhaust Cyl. 4 - 6 M >> CTM042345 M >> CTL016041		1	
(3)	946 105 244 61	Camshaft Exhaust Cyl. 4 - 6 M CTM042346 >> M CTL016042 >>		1	MDC.NA
4	946 105 243 60	Camshaft Intake Cyl. 4 - 6 M >> CTM042345 M >> CTL016041		1	
(4)	946 105 243 61	Camshaft Intake Cyl. 4 - 6 M CTM042346 >> M CTL016042 >>		1	MDC.NA
5	9A1 105 070 04	Hydraulic valve tappet Intake		6	
6	9A1 105 071 00	Hydraulic valve tappet Exhaust		18	
7	946 105 051 76	Camshaft adjuster Intake		2	
8	946 105 052 76	Camshaft adjuster Exhaust		2	
9	946 105 054 76	Screw Camshaft adjuster		4	
10	946 105 156 76	Piston ring Screw Single parts Not available POS.9 Use		4	
11	946 105 053 77	Actuator Camshaft	-15	4	
(11)	946 105 053 79	Actuator Camshaft	16-	4	

Illustration: 103-40

PORSCHE

Model: 95B **Model life 2014>>**

Pos	Part Number	Description	Remark	Qty	Model
12	999 701 506 41	Sealing ring 42 X 51,8 X 4,9		4	
13	999 073 103 01	Round head screw M 6 X 16		8	
14	946 105 155 75	Washer		4	
15	946 105 154 75	Sleeve		4	

Illustration: 103-50

PORSCHE

Model: 95B **Model life 2014>>**

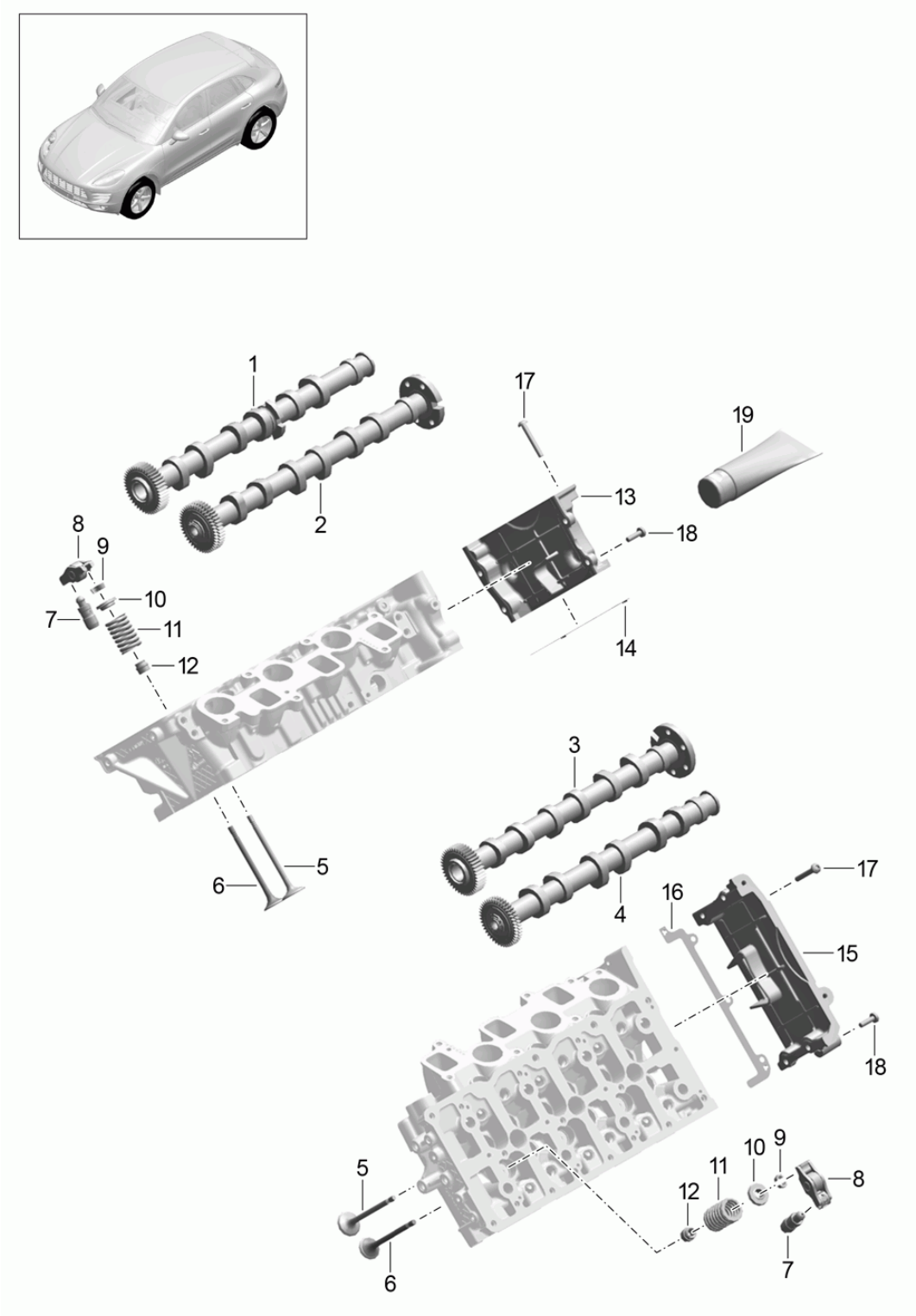

Model: 95B **Model life 2014>>**

Pos	Part Number	Description	Remark	Qty	Model
		Camshaft			MCD.UD MCT.BA/BB/BC
		Valves			
1	958 105 042 00	Camshaft Exhaust Cyl. 1 - 3		1	MCD.UD
(1)	958 105 042 10	Camshaft Exhaust Cyl. 1 - 3		1	MCT.BA/BB/BC
2	958 105 041 11	Camshaft Intake Cyl. 1 - 3		1	MCD.UD MCT.BA/BB/BC
3	958 105 044 01	Camshaft Intake Cyl. 4 - 6		1	MCD.UD MCT.BA/BB/BC
4	958 105 043 10	Camshaft Exhaust Cyl. 4 - 6		1	MCD.UD
(4)	958 105 043 20	Camshaft Exhaust Cyl. 4 - 6		1	MCT.BA/BB/BC
5	955 105 601 20	Intake valve		12	
6	958 105 322 30	Exhaust valve		12	
7	958 105 423 10	Differential housing Hydraulic		24	
8	955 105 417 20	Valve lever		24	
9	955 105 651 20	Valve collet		48	
10	955 105 641 10	Concave washer Upper		24	
11	955 105 119 10	Valve spring		24	
12	955 105 115 10	Valve stem seal 6 MM Intake Use also: Sleeve 955.105.501.00		12 X	
(12)	958 105 115 20	Valve stem seal 6 MM Exhaust Use also: Sleeve 955.105.501.00		12 X	
-	955 105 501 00	Sleeve for Repair Valve stem seal 6 X 20		X	
13	958 105 130 01	Cover Cyl. 1 - 3 Use also: Sealing compound 000.043.300.39		1 X	
14	958 105 592 02	Gasket Use also: Sealing compound 000.043.300.39		1 X	
15	958 105 129 01	Cover Cyl. 4 - 6 Use also: Sealing compound 000.043.300.39		1 X	

Model: 95B **Model life 2014>>**

Pos	Part Number	Description	Remark	Qty	Model
16	958 105 591 11	Gasket Use also: Sealing compound 000.043.300.39		1 X	
17	N 105 821 03	Oval-head screw M 6 X 40		6	
18	N 101 243 06	Oval-head screw M 6 X 20		8	
19	000 043 300 39	Sealing compound 1 tube 50 ML		X	

Illustration: 103-60

PORSCHE

Model: 95B **Model life 2014>>**

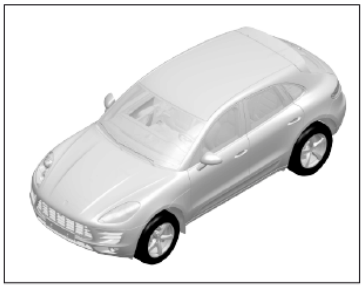

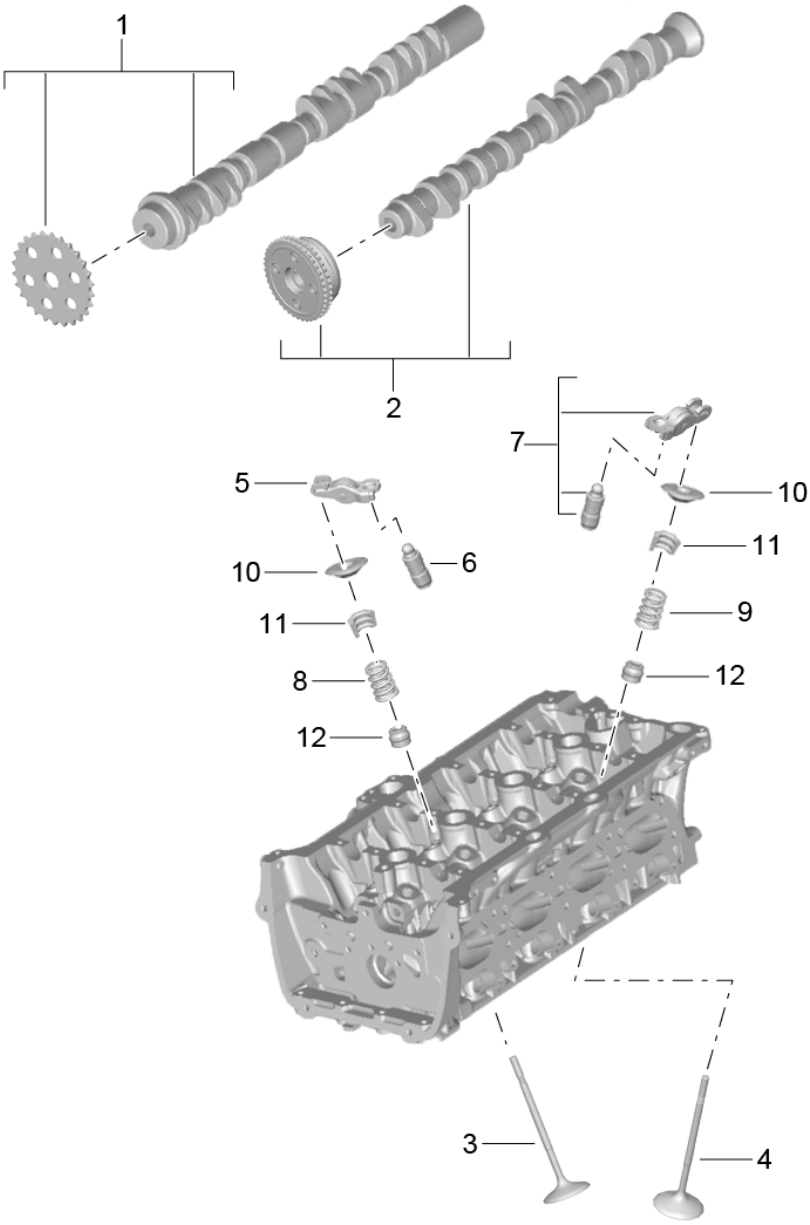

Model: 95B **Model life 2014>>**

Pos	Part Number	Description	Remark	Qty	Model
		Camshaft			MCN.CC
					MCY.NA/NB/PA
		Valves			
1	958 109 021 00	Camshaft		1	
		Intake			
		Cylinders 1 - 4			
2	958 109 022 00	Camshaft		1	
		Exhaust			
		Cylinders 1 - 4			
3	958 109 601 00	Intake valve		8	
4	958 109 611 00	Exhaust valve		8	MCN.CC
(4)	958 109 611 01	Exhaust valve		8	MCN.CC
(4)	958 109 611 10	Exhaust valve		8	MCN.CC
					MCY.NA/NB/PA
5	958 105 417 11	Valve lever		8	
		Intake			
6	958 105 423 20	Differential housing		8	
7	958 109 417 10	Valve lever		8	
		Exhaust			
		with			
		Differential housing			
8	958 109 623 20	Valve spring		8	
		Intake valve			
(8)	958 109 623 30	Valve spring		8	
		Intake valve			
9	958 109 623 10	Valve spring		8	MCN.CC
		Exhaust valve			
(9)	958 109 623 00	Valve spring		8	MCN.CC
					MCY.NA/NB/PA
		Exhaust valve			
10	958 105 641 00	Concave washer		16	
11	955 105 651 10	Valve collet		32	
12	955 105 675 00	Valve stem seal		16	
		6 MM			
		Use also:			
		Sleeve			
		955.105.501.00		X	
(12)	955 105 675 10	Valve stem seal		16	
		6 MM			
		Use also:			
		Sleeve			
		955.105.501.00		X	
(12)	955 105 675 20	Valve stem seal		16	
		6 MM			
		Use also:			
		Sleeve			
		955.105.501.00		X	
-	955 105 501 00	Sleeve		X	
		for			
		Repair			
		Valve stem seal			
		6 X 20			

Illustration: 103-70

PORSCHE

Model: 95B **Model life 2014>>**

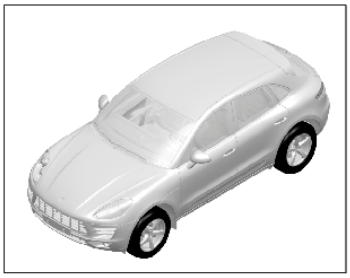

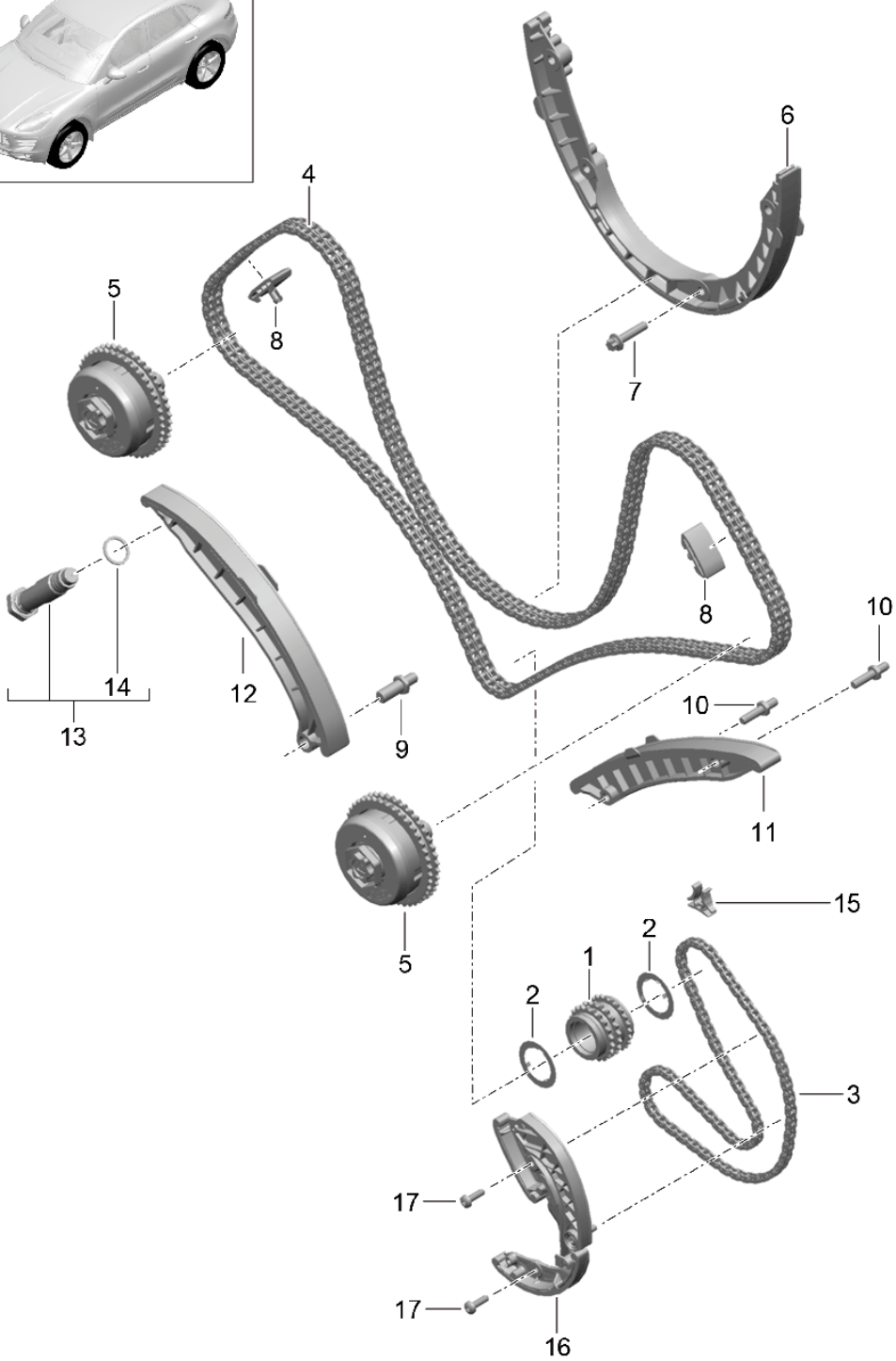

Model: 95B **Model life 2014>>**

Pos	Part Number	Description	Remark	Qty	Model
		Valve control			MCT.LA/MA MDC.NA
1	946 102 231 75	Sprocket Crankshaft		1	
2	948 102 230 00	Washer		2	
3	946 107 252 75	Chain Oil pump		1	
4	946 105 169 75	Chain		1	
5		Camshaft adjuster See illustrations 1/03/40			
6	948 105 023 12	Guide rail		1	
7	900 385 042 01	Torx screw BM 8 X 35		4	
8	948 105 166 12	Guide rail		2	
9	999 015 022 01	Threaded bolt M 10 X 25		1	
10	999 015 021 01	Threaded bolt M 8 X 25		2	
11	946 105 068 00	Guide rail		1	
12	948 105 065 10	Tensioner blade		1	
13	946 105 180 75	Chain adjuster M >> CTM035886 M >> CTL014194		1	
(13)	946 105 180 76	Chain adjuster M CTM035887 >> M CTL014195 >>		1	MDC.NA
14	900 123 118 30	Sealing ring A 22 X 27		1	
15	946 107 253 00	Guide piece		1	
16	946 107 258 77	Chain adjuster Oil pump Driving mechanism		1	
17	999 073 344 01	Round head screw M 6 X 20		2	

Illustration: 103-80

PORSCHE

Model: 95B **Model life 2014>>**

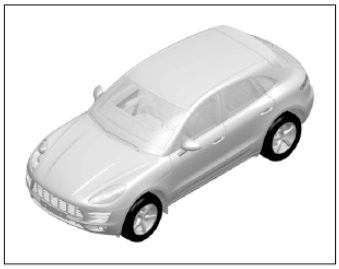

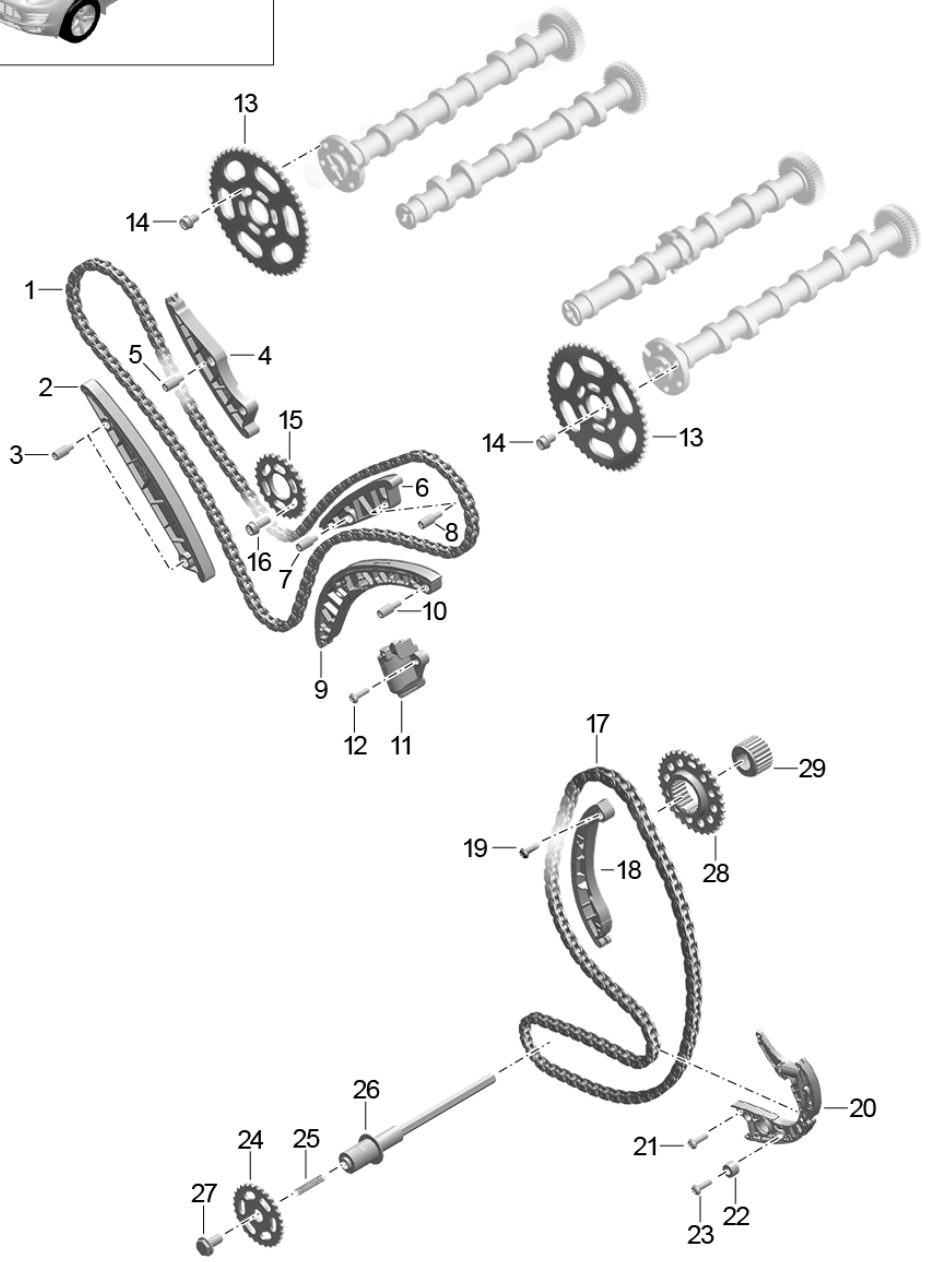

Model: 95B **Model life 2014>>**

Pos	Part Number	Description	Remark	Qty	Model
		Valve control			MCD.UD MCT.BA/BB/BC
1	958 105 169 11	Timing chain		1	
2	958 105 065 00	Guide rail		1	
3	958 105 426 00	Guide pin		2	
4	958 105 066 00	Guide rail		1	
5	958 105 426 00	Guide pin		2	
6	958 105 067 00	Guide rail		1	
7	958 105 426 00	Guide pin		1	
8	958 105 426 10	Guide pin		1	
9	958 105 068 00	Guide rail		1	
10	958 105 426 10	Guide pin		1	
11	958 105 467 12	Chain adjuster		1	
12	N 101 243 06	Oval-head screw M 6 X 20		2	
13	958 105 181 10	Sprocket Camshaft Z = 48		2	
14	N 910 522 01	Pan-head screw M 8 X 12		10	
15	958 101 333 00	Sprocket Balance shaft		1	
16	N 910 488 02	Pan-head screw M 8 X 20		3	
17	958 105 170 00	Timing chain		1	
18	958 105 069 00	Guide rail		1	
19	WHT 005 189	Outer hexagon round screw M 6 X 29,5 with Guide sleeve		1	
20	958 105 507 21	Chain adjuster		1	
21	N 101 243 06	Oval-head screw M 6 X 20		6	
22	958 105 535 10	Spacer sleeve 6 X 15,5 X 8		1	
23	N 101 243 06	Oval-head screw M 6 X 20		1	
24	958 107 114 10	Sprocket Oil pump		1	
25	955 105 481 00	Compression spring		1	
26	958 107 320 10	Drive shaft Oil pump		1	
27	N 908 932 02	Hexagon-head bolt M 10 X 20		1	
28	958 105 222 00	Sprocket high-pressure pump Only together with Flange 958.110.541.00 059.130.141.F		1	MCD.UD
(28)		Sprocket high-pressure pump Only together with Flange 958.110.541.10 059.130.141.H		1	MCD.UD
(28)	958 105 222 11	Sprocket high-pressure pump Only together with Flange 958.110.541.10 059.130.141.H		1	
29		Flange		1	

Model: 95B **Model life 2014>>**

Pos	Part Number	Description	Remark	Qty	Model
		Sprocket high-pressure pump See illustrations 1/07/40 Pos.18			

Illustration: 103-90

PORSCHE

Model: 95B **Model life 2014>>**

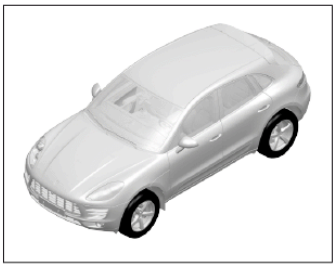

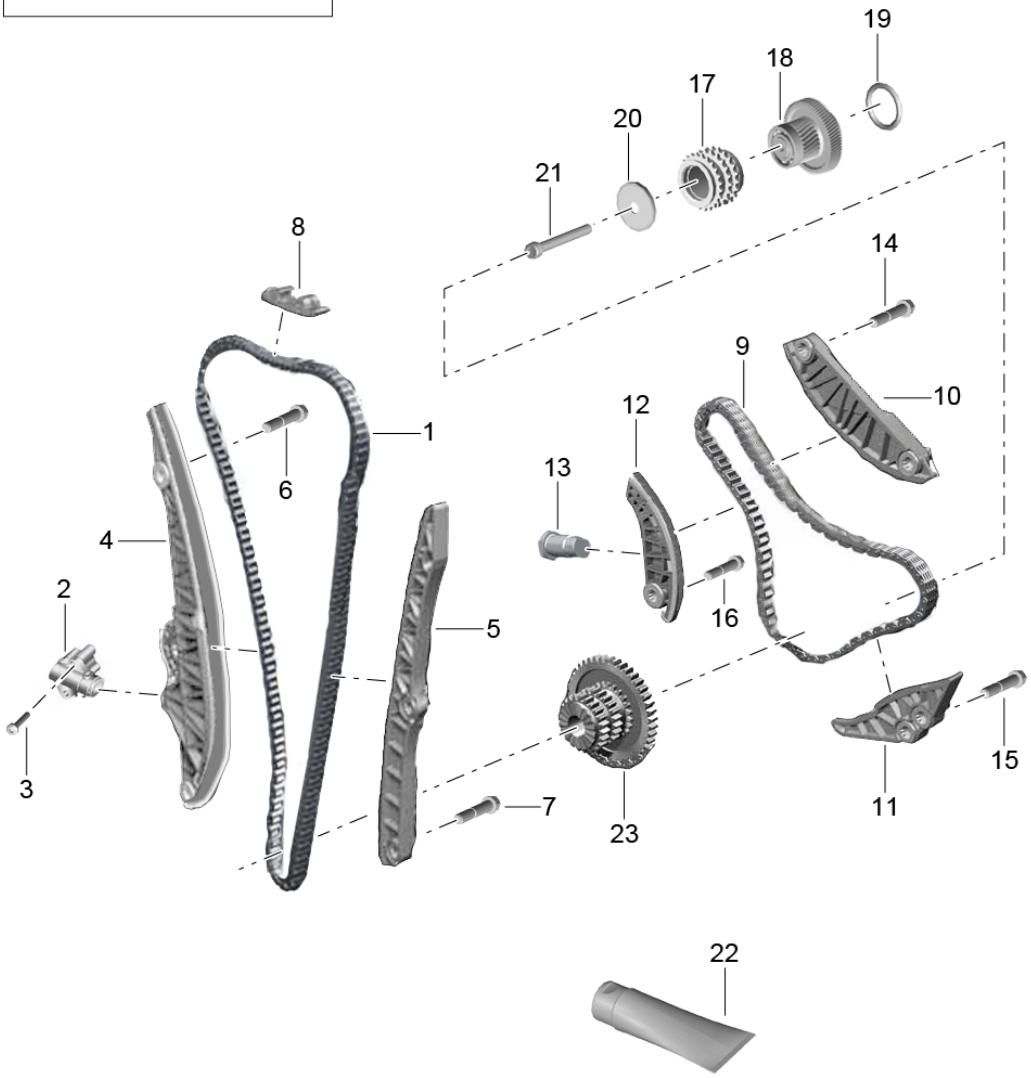

Illustration: 103-90

PORSCHE

Model: 95B **Model life 2014>>**

Pos	Part Number	Description	Remark	Qty	Model
		Valve control			MCN.CC MCY.NA/NB/PA
1	958 109 158 10	Timing chain		1	
2	958 109 467 00	Chain adjuster		1	
3	N 107 654 01	Torx screw Aluminium M 6 X 35		2	
4	958 109 509 00	Guide rail		1	
5	958 109 469 00	Guide rail		1	
6	N 911 303 01	Fit bolt M 8 X 14		1	
7	N 911 304 01	Fit bolt M 8 X 12		2	
8	958 109 469 10	Guide rail		1	
9	958 109 158 00	Timing chain		1	
10	958 109 469 20	Guide rail		1	
11	958 109 469 30	Guide rail		1	
(11)	958 109 469 31	Guide rail		1	
12	958 109 509 10	Guide rail		1	
13	958 109 467 10	Chain adjuster		1	
14	N 911 304 01	Fit bolt M 8 X 12		2	
15		Fit bolt M 8 X 12		2	
16	N 911 303 01	Fit bolt M 8 X 14		1	
17	958 103 319 00	Sprocket		1	
18	958 103 559 00	Intermediate shaft		1	
19	WHT 001 905 A	O-ring		1	
(19)	WHT 001 905	O-ring		1	
20	WHT 001 396 A	Thrust washer		1	
21	N 105 449 04	Pan-head screw M 8 X 55		1	
22	958 110 503 00	Sealing compound		1	
23		Sprocket Crankshaft See illustrations 1/02/20 POS.3		1	

Illustration: 104-00

PORSCHE

Model: 95B **Model life 2014>>**

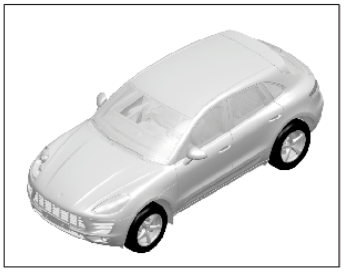

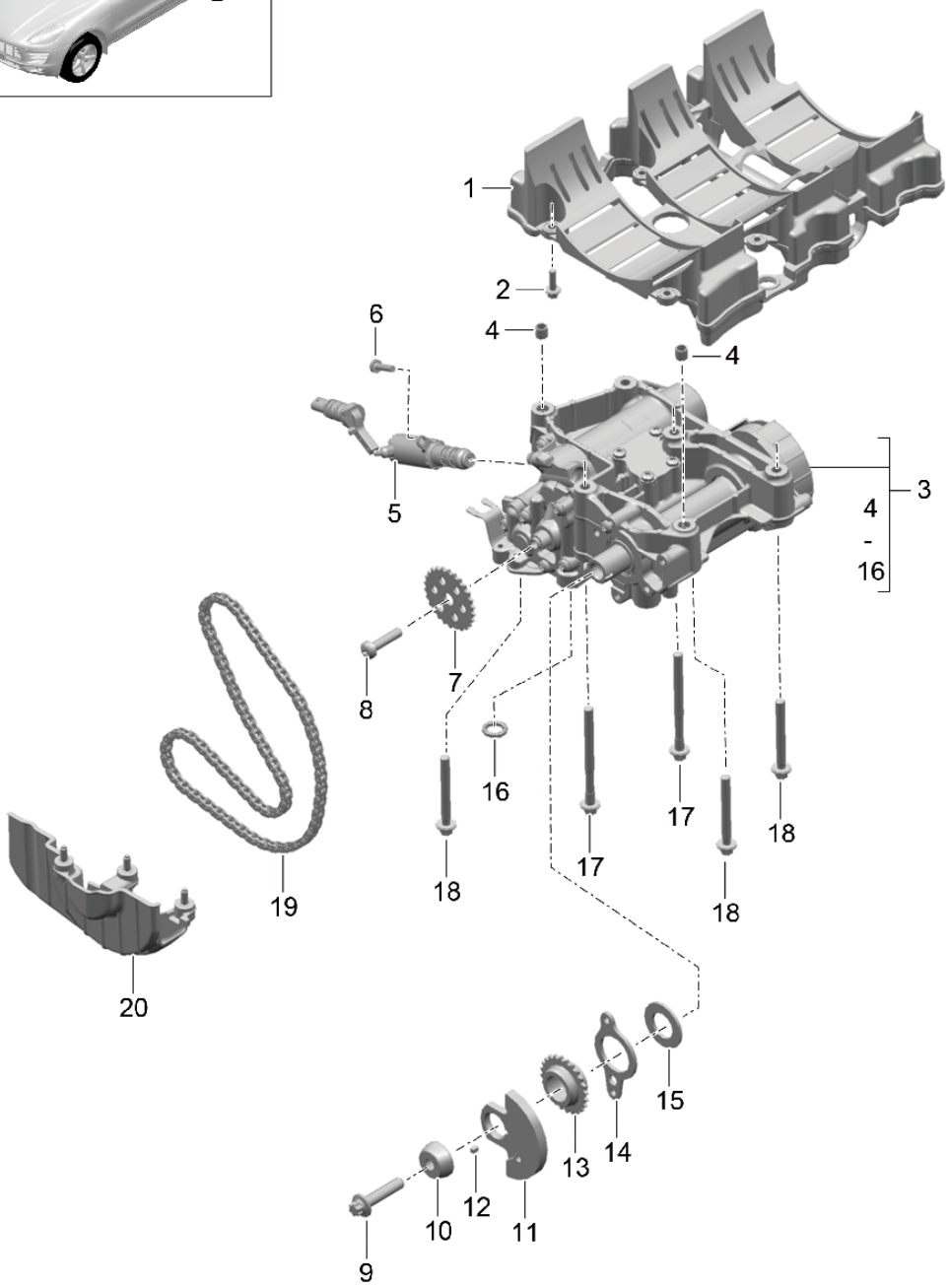

Model: 95B **Model life 2014>>**

Pos	Part Number	Description	Remark	Qty	Model
		Oil return circuit			MCT.LA/MA MDC.NA
		Oil pump			
1	946 107 085 75	Oil return circuit		1	
2	900 385 019 01	Torx screw BM 6 X 20		6	
3	946 107 013 61	Oil pump		1	MCT.MA MDC.NA
(3)	946 107 013 35	Oil pump		1	MCT.LA
4	999 095 063 01	Dowel sleeve 11M6 X 10		2	
5	946 107 113 60	Solenoid valve		1	
6	999 073 344 01	Round head screw M 6 X 20		1	
7	948 107 114 01	Sprocket		1	
8	946 107 213 20	Pan-head screw		1	
9	900 385 011 01	Torx screw BM 10 X 45		1	
10	946 107 218 20	Cone washer		1	MCT.MA MDC.NA
(10)	946 107 218 35	Cone washer		1	MCT.LA
11	946 107 216 60	Balance weight		1	MCT.MA MDC.NA
(11)	946 107 216 35	Balance weight		1	MCT.LA
12	946 107 217 20	Feather key		1	
13	946 107 114 20	Sprocket Balance shaft		1	
14	946 107 215 60	Lid		1	
15	946 107 214 60	Washer		1	
16	999 701 490 40	O-ring 11,3 X 3,0		1	
17	900 385 007 01	Torx screw BM 8 X 100		2	
18	900 385 115 01	Torx screw BM 8 X 70		4	
19		Chain Oil pump See illustrations 1/03/70		1	
20	946 107 254 60	Cover with Fastening screw M >> CTL013429 M >> CTM000153		1	
(20)	946 107 254 61	Cover with Fastening screw M CTL013430 >> M CTM000154 >>		1	MDC.NA

Illustration: 104-30

PORSCHE

Model: 95B **Model life 2014>>**

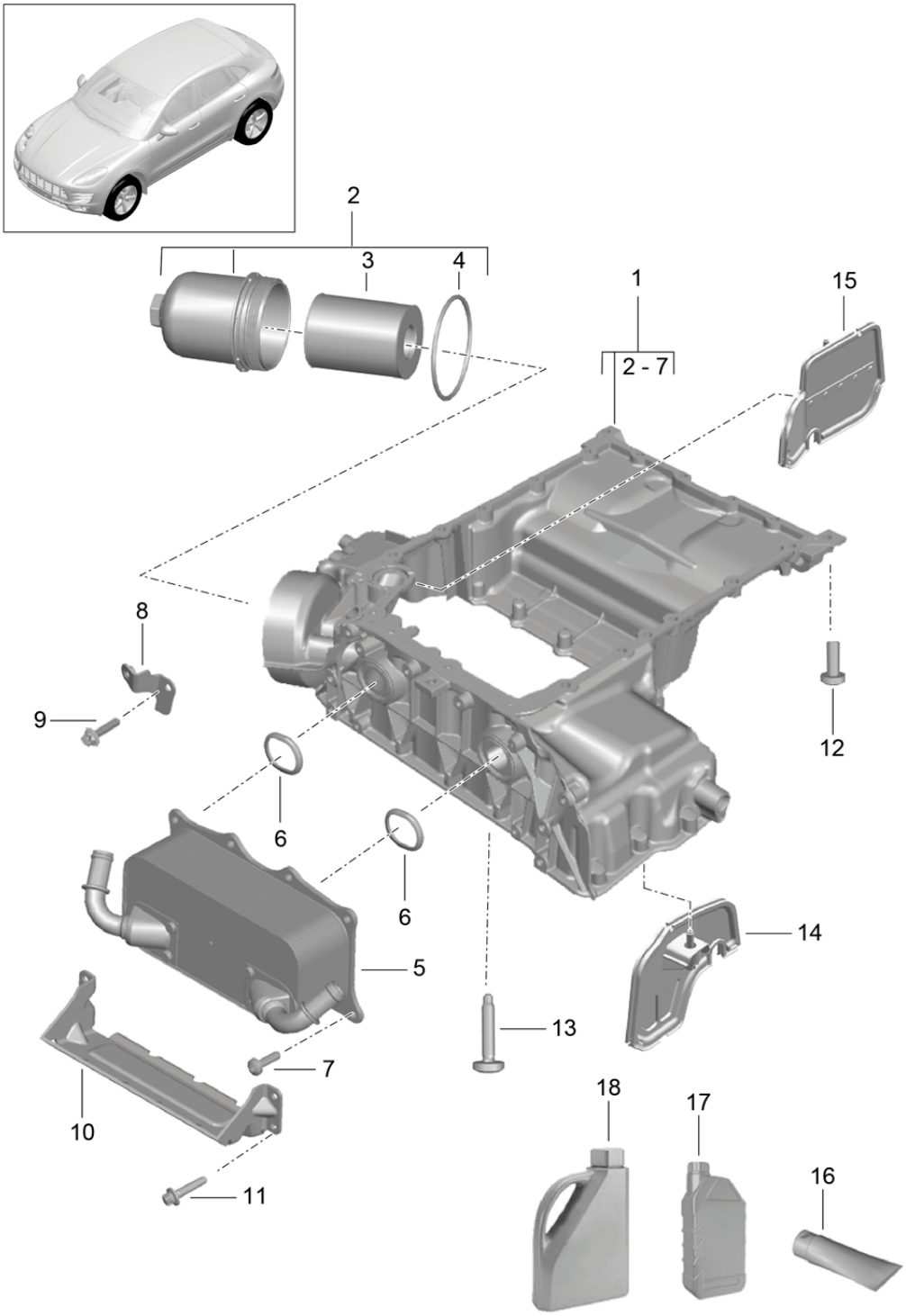

Model: 95B **Model life 2014>>**

Pos	Part Number	Description	Remark	Qty	Model
		Oil-conducting housing			MCT.LA/MA MDC.NA
		Oil filter Heat exchanger			
1	946 107 051 31	Oil-conducting housing Aluminium		1	
2	946 107 022 75	Oil filter		1	
3	948 107 222 00	Filter element Use also: Sealing ring 946.107.322.75		1 1	
4	946 107 322 75	Sealing ring		1	
5	946 107 281 30	Heat exchanger		1	
6	948 107 175 20	Gasket		2	
7	999 073 344 01	Round head screw M 6 X 20		6	
8	946 107 251 30	Support		1	
9	900 385 009 01	Torx screw M 6 X 16		1	
10	95B 121 557	Stone guard		1	
11	999 073 094 01	Screw M 8 X 20		4	
12	999 073 905 31	Oval-head screw Aluminium M 6 X 30		17	
13	900 385 072 01	Torx screw M 6 X 25		4	
14	946 107 242 30	Bulkhead Oil-conducting housing	/L	1	
15	946 107 241 30	Bulkhead Oil-conducting housing	/R	1	
16	999 915 573 43	Sealing compound 1 tube 75 ML		X	
17	000 043 301 19	Engine oil EXXON MOBIL 1 0W-40 1 LITER Container Information available		X	
18	000 043 301 21	Engine oil EXXON MOBIL 1 0W-40 20 LITER Container Information available		X	

Illustration: 104-40

PORSCHE

Model: 95B **Model life 2014>>**

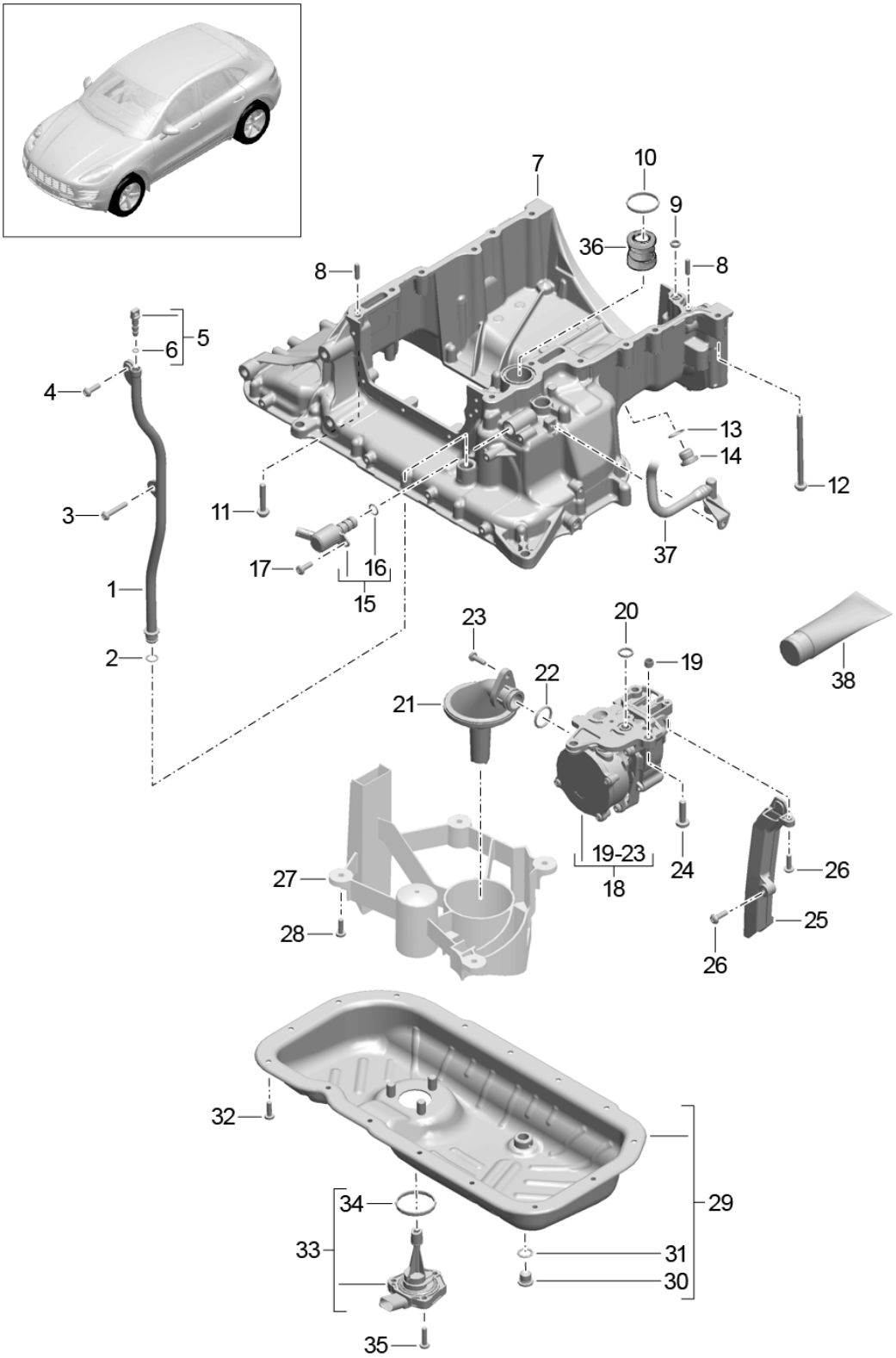

Model: 95B **Model life 2014>>**

Pos	Part Number	Description	Remark	Qty	Model
		Oil-conducting housing			MCD.UD MCT.BA/BB/BC
		Oil pump			
		Vacuum pump			
		Oil pan			
1	958 107 066 10	Guide tube		1	
		Use also:			
		955.107.427.00		1	
2	955 107 427 00	Round seal 12 X 2		1	
3	N 105 540 05	Oval-head screw M6 X 35		1	
4	N 101 243 06	Oval-head screw M6 X 20		1	
5	958 107 168 10	Stopper		1	
6	N 908 138 02	O-ring 5 X 1,9		1	
7	958 107 071 23	Oil-conducting housing		1	
8	955 102 277 00	Roll pin 6,2 X 22		2	
9	958 107 609 00	Gasket		1	
10	958 107 610 00	Gasket		1	
11	WHT 004 873	Outer hexagon round screw M 7 X 40		9	
12	WHT 004 874	Outer hexagon round screw M 7 X 105		3	
13	N 013 832 6	Sealing ring 18 X 22		1	
14	N 911 965 01	Screw plug M 18 X 1,5		1	
15	958 107 243 30	Control valve		1	
16	N 910 568 01	O-ring 12 X 2		1	
17	N 101 961 03	Oval-head screw M 6 X 18		1	
18	958 107 013 60	Oil pump with Vacuum pump M >> CDU165339 M >> CTB020586		1	
(18)	958 107 013 61	Oil pump with Vacuum pump M CDU165340 >> M CTB020587 >>		1	
19		Bush Not available		2	
20	958 107 611 10	Gasket 23,4 X 3,53		1	
21		Intake pipe Not available Use Pos.18		1	
22		Sealing ring Not available Use Pos.18		1	
23		Screw Not available Use Pos.18		1	
24	N 107 453 01	Outer hexagon round screw M 8 X 30		3	

Model: 95B **Model life 2014>>**

Pos	Part Number	Description	Remark	Qty	Model
25	958 107 031 20	Return pipe		1	
26	N 107 451 01	Outer hexagon round screw M 6 X 20		2	
27	958 107 138 11	Insert for oil sump		1	
28	N 107 451 01	Outer hexagon round screw M 6 X 20		4	
29	958 107 055 21	Oil pan		1	
30	N 016 027 6	Screw plug M 14 X 1,5		1	
(30)	N 911 679 01	Screw plug M 14 X 1,5		1	
31	N 013 815 7	Sealing ring 14 X 20		1	
(31)	N 013 849 4	Sealing ring 14 X 20		1	
32	N 107 451 01	Outer hexagon round screw M 6 X 20		15	
33	958 606 160 20	Oil-level sender		1	
34	038 103 196 B	Gasket		1	
35	N 104 134 05	Outer hexagon round screw M 6 X 25		3	
36	958 107 376 20	Check valve		1	
37		Vacuum line See illustrations 1/08/30 POS.28		1	
38	000 043 300 39	Sealing compound 1 tube 50 ML		X	

Illustration: 104-50

PORSCHE

Model: 95B **Model life 2014>>**

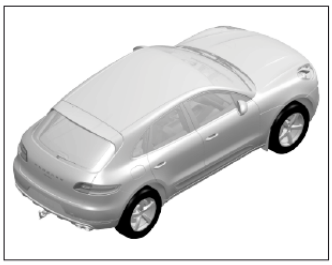

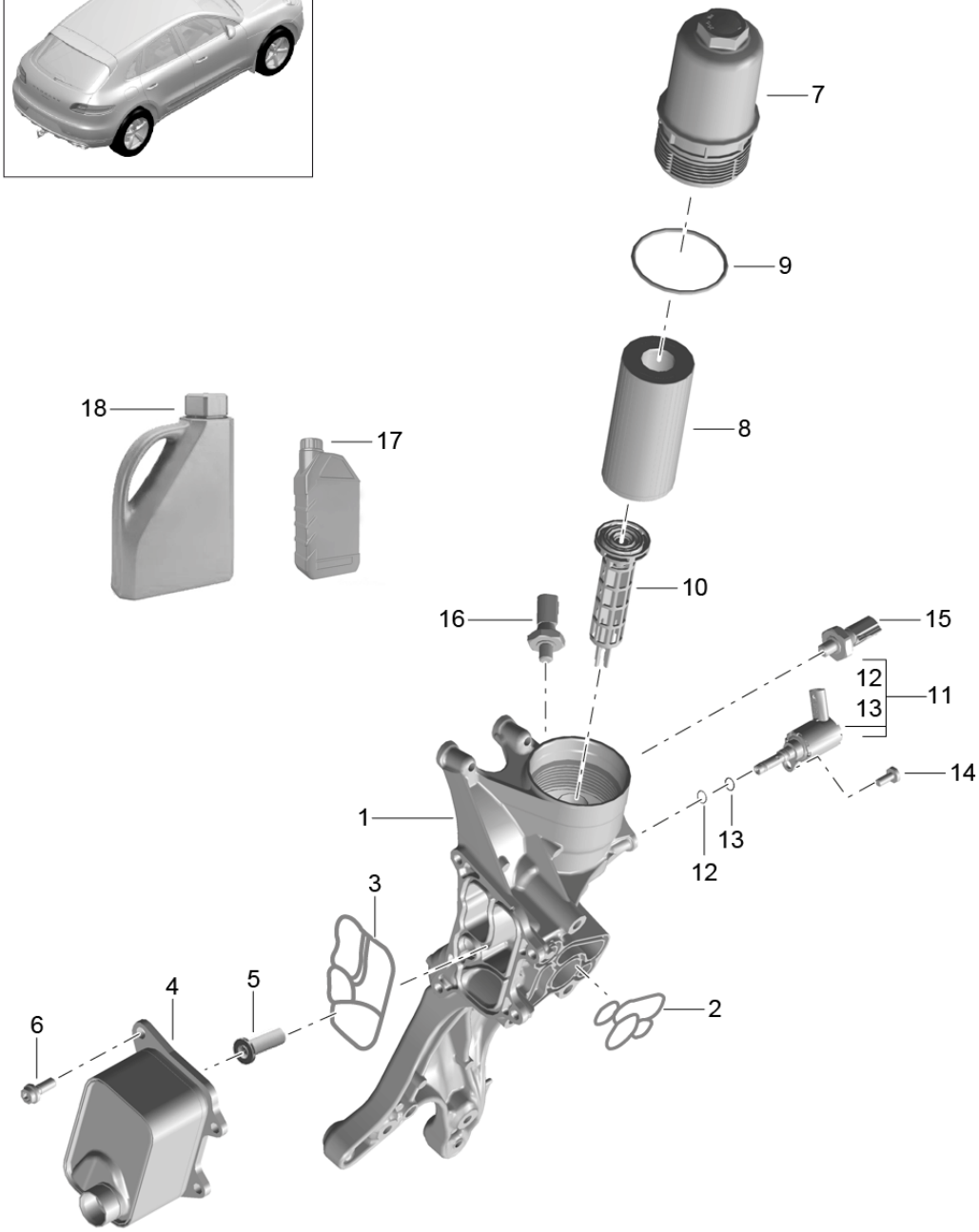

Model: 95B **Model life 2014>>**

Pos	Part Number	Description	Remark	Qty	Model
		Oil-conducting housing			MCN.CC MCY.NA/NB/PA
		Oil filter Oil cooler			
1		Support See illustrations 1/02/80		1	
2	958 115 441 00	Gasket Oil-conducting housing		1	
3	958 117 070 00	Gasket Oil cooler		1	
4	958 117 021 00	Oil cooler		1	
5	958 103 208 00	Valve		1	
6	N 911 976 01	Torx screw Aluminium M 8 X 20		4	
7	958 115 408 00	Oil filter Housing		1	
8	958 115 466 00	Oil filter Use also: 958.115.441.10		1 1	
(8)	958 115 562 00	Oil filter with Gasket		1	
9		Gasket Not available 958.115.562.00 Use		1	
10	958 115 678 00	Connection piece		1	
(10)	958 115 678 10	Connection piece		1	
11	958 115 243 00	Control valve		1	
12	WHT 007 316	O-ring 5,28 X 1,78		1	
13	WHT 007 317	O-ring 7,5 X 1,5		1	
14	N 107 512 01	Outer hexagon round screw Aluminium M 6 X 14		1	
15	958 919 081 10	Oil pressure switch		1	
16	958 919 081 20	Oil pressure switch		1	
17	000 043 301 16	Engine oil EXXON MOBIL 1 ESP FORMULA 5W-30 1 LITER Container Information available	-(CN)	X	
(17)	000 043 301 19	Engine oil EXXON MOBIL 1 0W-40 1 LITER Container Information available	(CN)	X	
18	000 043 301 17	Engine oil EXXON MOBIL 1 ESP FORMULA 5W-30 20 LITER Container Information available	-(CN)	X	
(18)	000 043 301 21	Engine oil EXXON MOBIL 1 0W-40 20 LITER Container Information available	(CN)	X	

Illustration: 104-60

PORSCHE

Model: 95B **Model life 2014>>**

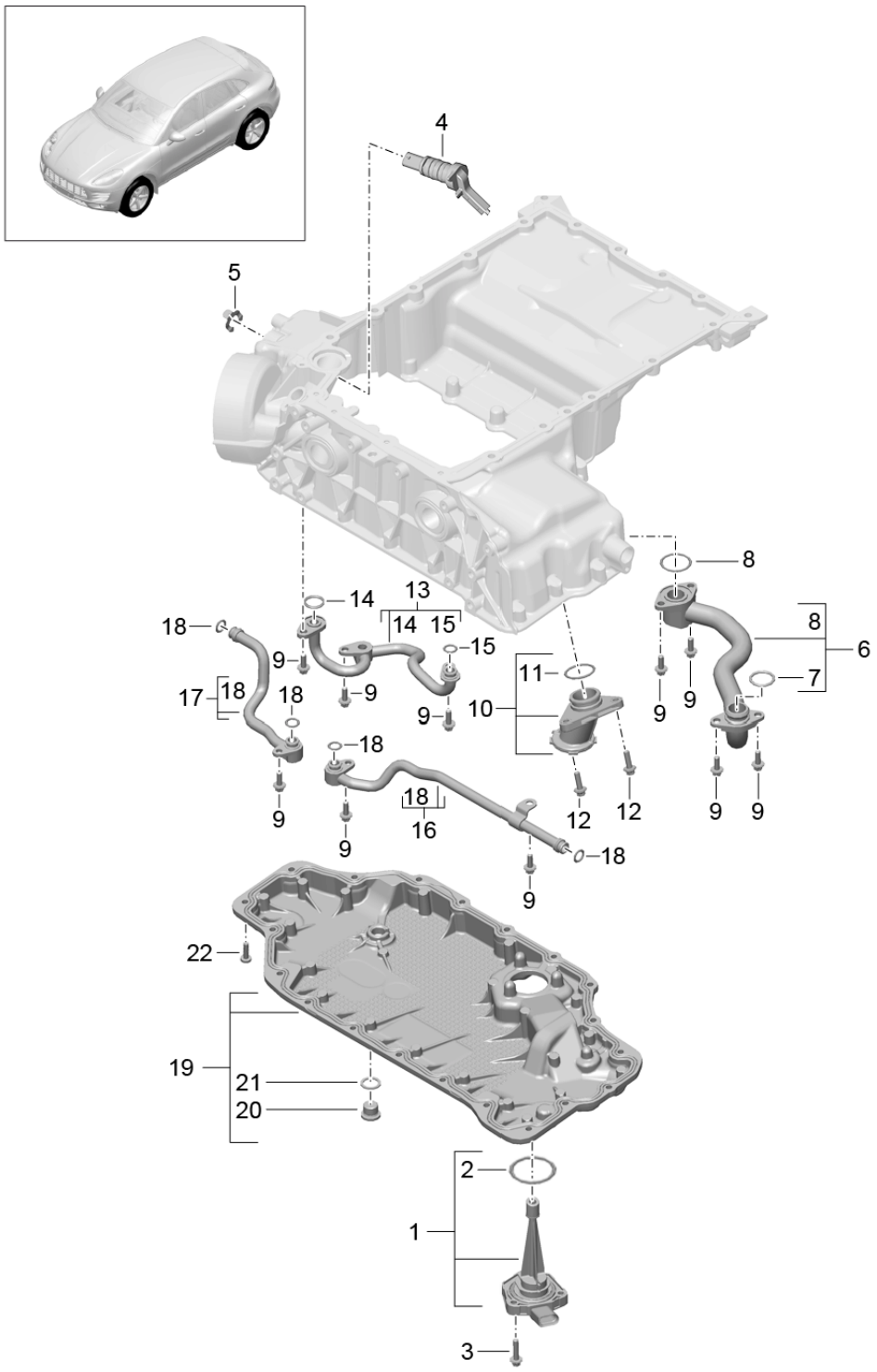

Model: 95B **Model life 2014>>**

Pos	Part Number	Description	Remark	Qty	Model
		Suction tube			MCT.LA/MA MDC.NA
		Oil pan			
1	946 606 170 00	Oil-level sender		1	
2	038 103 196 B	Gasket		1	
3	900 385 072 01	Torx screw BM 6 X 25		3	
4		Solenoid valve Oil pump See illustrations 1/04/00 POS.5		1	
5	946 107 413 60	Safety clip Solenoid valve		1	
6	946 107 031 30	Oil tube		1	
7	999 707 585 40	O-ring 22 X 3		1	
8	999 707 547 40	O-ring 28 X 3		1	
9	900 385 009 01	Torx screw M 6 X 16		10	
10	946 107 030 30	Suction tube		1	
11	999 707 547 40	O-ring 28 X 3		1	
12	900 385 019 01	Torx screw M 6 X 20		2	
13	946 107 033 31	Oil pipe		1	
14	999 707 567 40	O-ring 17 X 3		1	
15	999 707 603 40	O-ring 10 X 3		1	
16	946 107 037 31	Oil pipe Turbocharger Cyl. 4 - 6		1	
17	946 107 038 31	Oil pipe Turbocharger Cyl. 1 - 3		1	
18	999 707 603 40	O-ring 10 X 3		4	
19	946 107 015 31	Oil pan		1	
20	900 219 004 01	Screw plug M 16 X 1,5		1	
21	900 123 152 30	Sealing ring A 16 X 22		1	
22	999 073 344 01	Round head screw M 6 X 20		20	

Illustration: 104-70

PORSCHE

Model: 95B **Model life 2014>>**

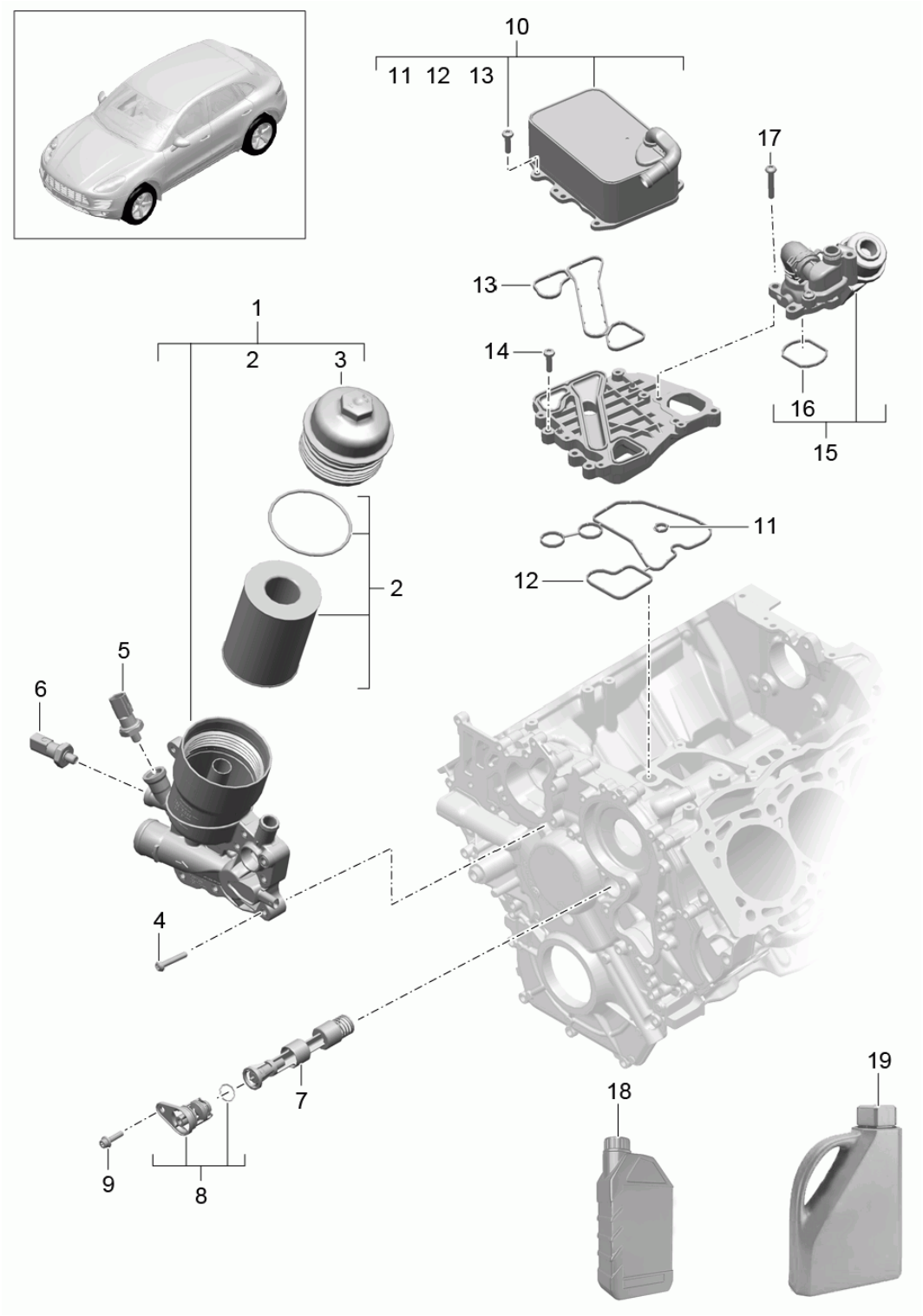

Model: 95B **Model life 2014>>**

Pos	Part Number	Description	Remark	Qty	Model
		Oil filter			MCD.UD MCT.BA/BB/BC
		Flange Oil cooler			
1	958 107 010 32	Oil filter with Flange And Thermostat insert Water cooling		1	
2	958 107 222 20	Filter element with Gasket		1	
3	955 107 122 00	Lid		1	
4	N 105 540 05	Oval-head screw M 6 X 35		7	
(4)	N 104 057 02	Outer hexagon round screw AM 6 X 45		1	
5	958 606 081 60	Oil pressure switch 0,75 - 1,05 BAR		1	
6	958 606 081 70	Oil pressure switch 2,0 - 2,5 BAR		1	
7	958 107 201 20	Thermostat Engine oil cooling		1	
8	958 107 185 30	Lid LAENGE 26 MM Information available	-14	1	
(8)	958 107 185 40	Lid LAENGE 28 MM Information available	-14	1	
(8)		Lid LAENGE 28 MM Information available	15-	1	
9	N 911 804 01	Outer hexagon round screw M 6 X 22		1	
10	958 107 271 21	Oil cooler Complete		1	
11	958 107 175 20	Gasket		1	
12	958 107 176 00	Gasket		1	
13	958 107 176 20	Gasket		1	
14	N 107 002 01	Outer hexagon round screw M 6 X 22		4	
15	958 106 737 02	Governor		1	
16	958 106 749 00	Gasket		1	
(16)	958 106 749 02	Gasket		1	
17	N 105 540 05	Oval-head screw M 6 X 35		3	
18	000 043 301 16	Engine oil EXXON MOBIL 1 ESP FORMULA 5W-30 1 LITER Container Information available		X	
19	000 043 301 17	Engine oil EXXON MOBIL 1 ESP FORMULA 5W-30 20 LITER Container Information available		X	

Illustration: 104-80

PORSCHE

Model: 95B **Model life 2014>>**

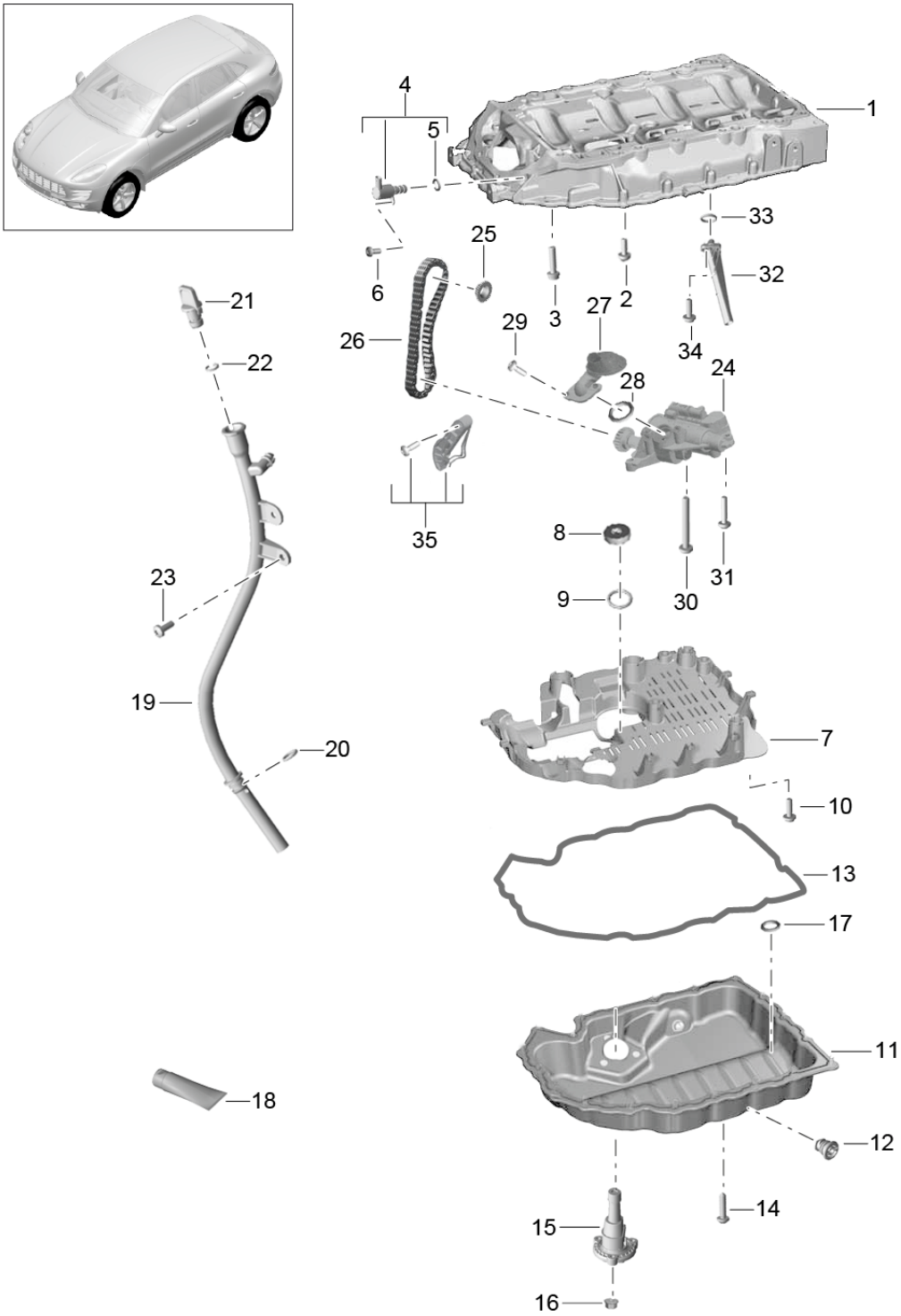

Model: 95B **Model life 2014>>**

Pos	Part Number	Description	Remark	Qty	Model
		Suction tube			MCN.CC MCY.NA/NB/PA
		Oil pan Oil pump			
1	958 103 603 00	Oil pan Upper part Use also: 958.103.138.00 N .028.222.2 N .911.687.01		1 1 1 1	
2	N 107 663 01	Torx screw Aluminium M 8 X 20		13	
3	N 912 112 01	Torx screw Aluminium M 8 X 30		5	
4	958 115 243 10	Control valve		1	
5	N 910 568 01	O-ring 12 X 2		1	
6	N 911 736 01	Torx screw Aluminium M 6 X 22		1	
7	958 103 138 00	Insert for oil sump		1	
8	958 103 245 00	Valve Not available		1	
9	N 028 222 2	O-ring 20 X 3,15		2	
10	N 911 687 01	Pan-head screw		1	
11	958 103 600 00	Oil pan Lower part Use also: 958.103.649.00		1	
12	958 103 801 00	Cap with O-ring 14 X 1,5 X 22		1	
13	958 103 649 00	Gasket Oil pan		1	
14	N 910 717 01	Round head screw M 6 X 25		19	
(14)	N 107 002 01	Outer hexagon round screw M 6 X 22		19	
(14)	N 108 397 01	Lens-head screw M6X24		19	
15	958 907 660 00	Oil-level sender		1	
16	N 015 082 10	Hexagon nut M 6		3	
17	N 028 222 2	O-ring Oil pan 20 X 3,15		2	
18	000 043 207 49	Sealing compound 1 tube 80 ML		X	
(18)	000 043 300 39	Sealing compound 1 tube 50 ML		X	
19	958 115 610 00	Guide tube		1	
20	WHT 003 463	O-ring 11,8 X 2,5		1	
21	958 115 418 30	Stopper		1	
22	WHT 002 784	O-ring 9,5 X 2		1	
23	N 104 514 09	Pan-head screw		1	

Model: 95B **Model life 2014>>**

Pos	Part Number	Description	Remark	Qty	Model
		M 6 X 16			
24	958 115 105 00	Oil pump with Sprocket Use also: 958.115.225.00 958.109.507.00		1	MCN.CC
(24)	958 115 105 10	Oil pump with Sprocket Use also: POS. 26 POS. 35		1	MCY.NA
(24)	958 115 105 20	Oil pump with Sprocket Use also: 958.115.225.00 958.109.507.10		1	MCY.NA/NB/PA
25		Sprocket See illustrations 1/02/20 POS.3		1	
26	958 115 225 00	Tooth-type chain		1	
27	958 115 251 00	Suction tube		1	
28	N 028 222 2	O-ring 20 X 3,15		1	
29	N 107 500 01	Outer hexagon round screw M 6 X 16		2	
30	N 911 649 01	Round head screw M 8 X 65		1	
31	N 107 360 01	Round head screw M 8 X 35		2	
32	958 103 206 00	Connection piece Oil return circuit		1	
33	N 028 222 2	O-ring 20 X 3,15		1	
34	N 911 687 01	Pan-head screw M 6 X 18		2	
35	958 109 507 00	Chain adjuster Together with 958.115.105.00		1	MCN.CC
(35)	958 109 507 10	Chain adjuster Only together with 958.115.105.20		1	MCY.NA/NB/PA

Illustration: 105-00

PORSCHE

Model: 95B **Model life 2014>>**

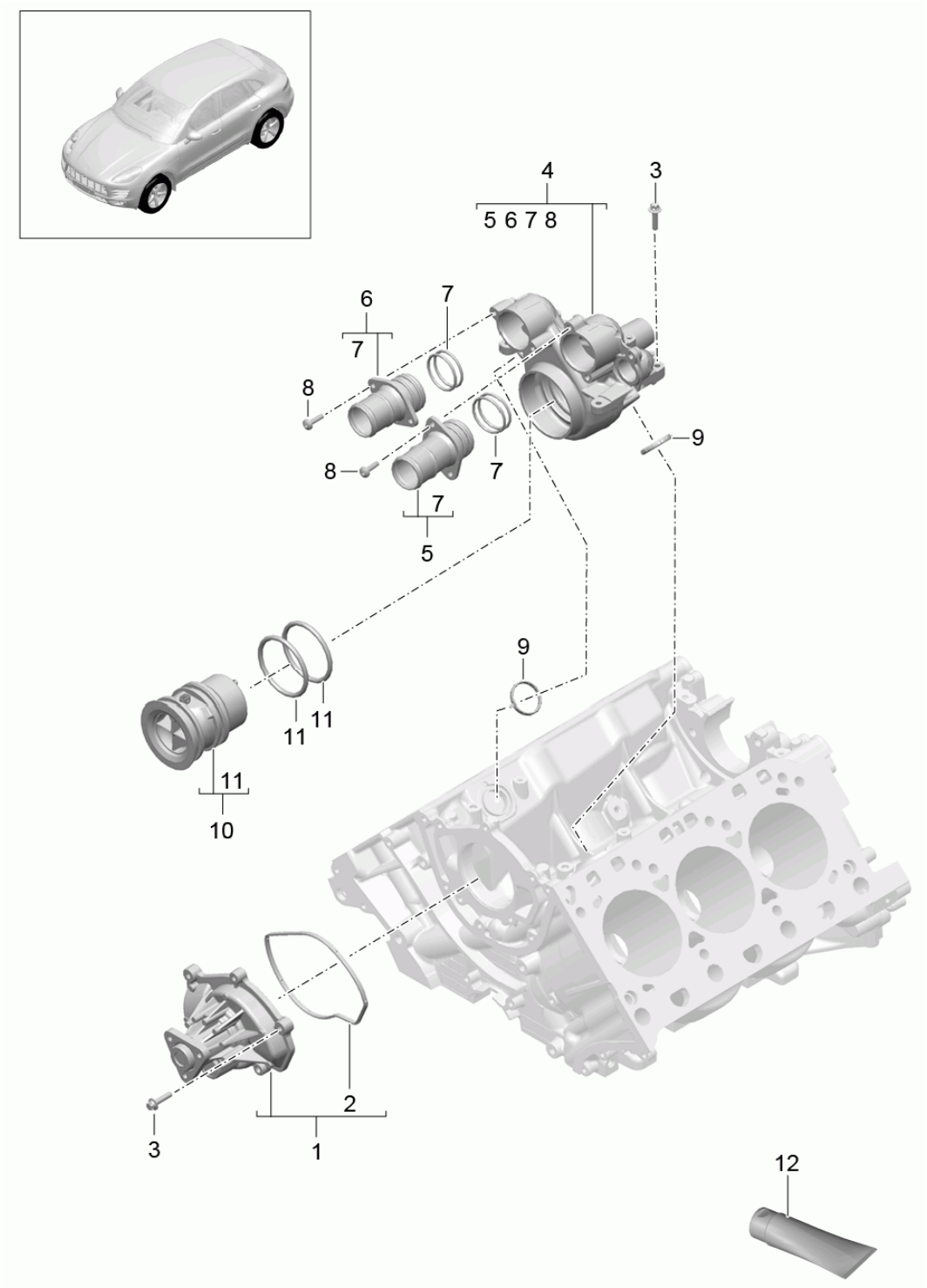

Illustration: 105-00

PORSCHE

Model: 95B **Model life 2014>>**

Pos	Part Number	Description	Remark	Qty	Model
		Water pump			MCT.LA/MA MDC.NA
		Thermostat housing			
1	948 106 033 01	Water pump		1	
2	948 106 533 00	Gasket		1	
3	900 385 072 01	Torx screw BM 6 X 25		9	
4	946 106 080 31	Thermostat housing		1	
5	946 106 260 31	Connecting piece		1	
6	946 106 360 31	Connecting piece		1	
7	999 701 083 40	O-ring 38 X 3		4	
8	999 073 344 01	Round head screw M 6 X 20		4	
9	948 106 124 02	Gasket		2	
10	948 106 034 01	Thermostat insert		1	
11	948 106 707 00	O-ring 62,86 X 5,33		2	
12	000 043 205 93	Grease 1 100-gramme tube To Use for O-ring Thermostat insert		X	

Illustration: 105-05

PORSCHE

Model: 95B **Model life 2014>>**

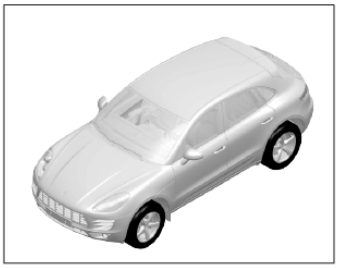

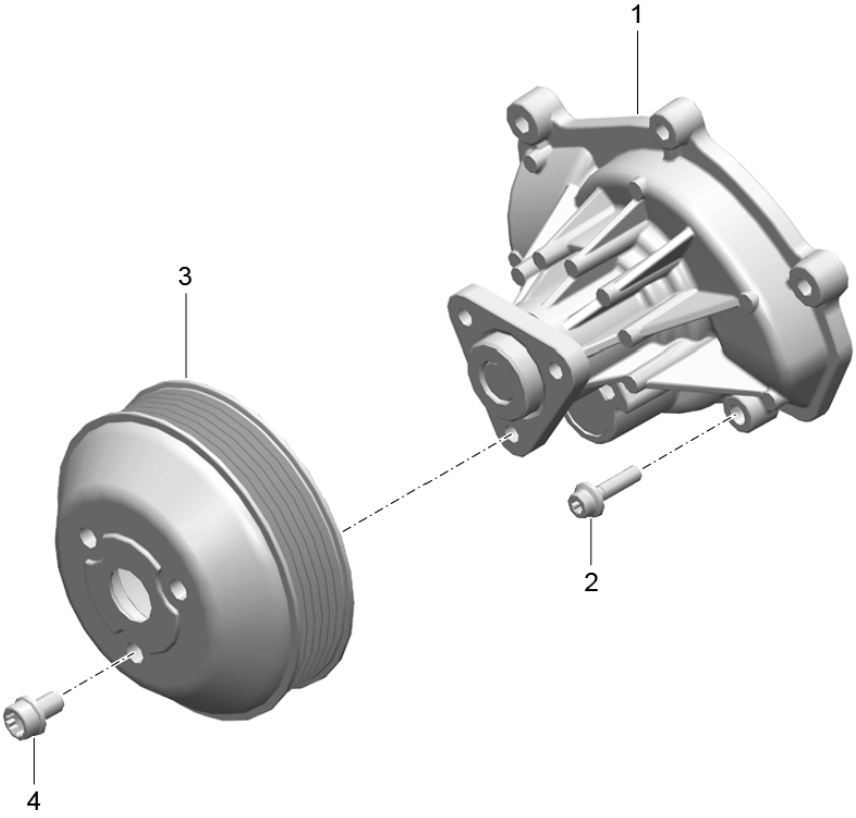

Illustration: 105-05

PORSCHE

Model: 95B **Model life 2014>>**

Pos	Part Number	Description	Remark	Qty	Model
		Water pump			MCD.UD MCT.BA/BB/BC
1	958 106 033 31	Water pump with Gasket		1	MCD.UD MCT.BA/BB/BC
2	N 911 804 01	Outer hexagon round screw M 6 X 22 Aluminium		10	
3	958 106 091 10	Pulley		1	
4	N 910 522 01	Pan-head screw M 8 X 12		3	

Illustration: 105-10

PORSCHE

Model: 95B **Model life 2014>>**

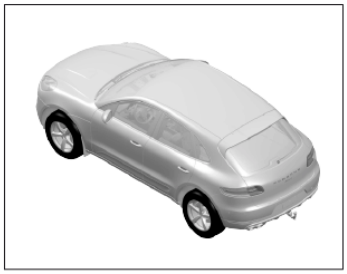

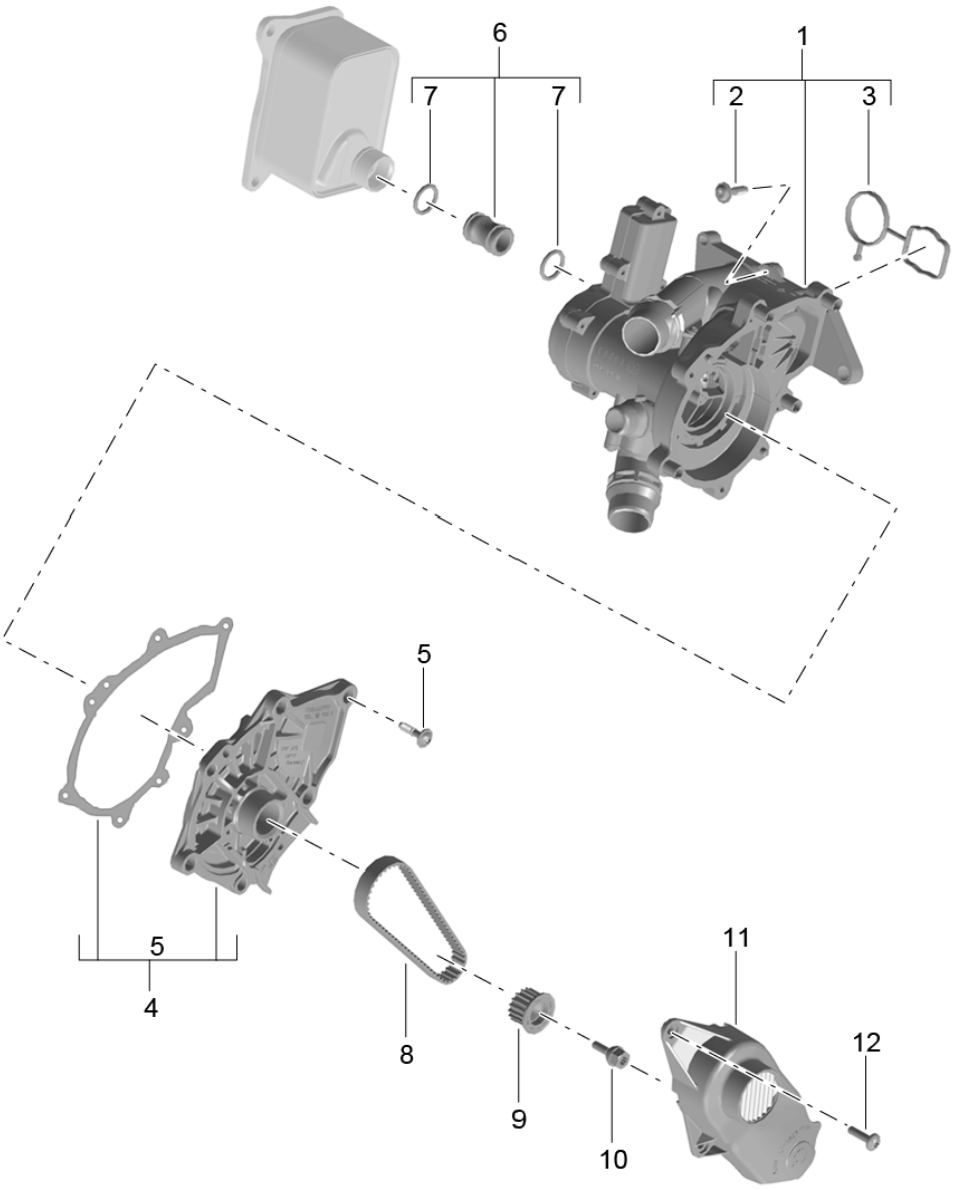

Model: 95B **Model life 2014>>**

Pos	Part Number	Description	Remark	Qty	Model
		Water pump			MCN.CC MCY.NA/NB/PA
1	958 121 111 00	Thermostat		1	
(1)	958 121 111 10	Thermostat		1	
2	WHT 004 972	Hexagon-head bolt M 6 X 23		5	
3	958 121 139 00	Gasket		1	
4	958 121 012 00	Water pump		1	
5		Shouldered bolt Not available		1	
6	958 121 131 00	Connection piece		1	
7	WHT 004 973	O-ring 18 X 3		2	
8	958 121 605 00	Toothed belt		1	
9	958 103 731 00	Pulley		1	
(9)	958 121 731 00	Pulley		1	
10	WHT 001 163 B	Hexagon-head bolt M 6 X 16,5		1	
11	958 109 121 00	Cover for toothed belt M >> CNC137933 M >> CYN007354		1	MCN.CC MCY.NA
(11)	958 109 121 10	Cover for toothed belt M CNC137934 >> M CYN007355 >>		1	MCN.CC MCY.NA/NB/PA
12	N 910 696 01	Hexagon-head bolt M 6 X 22		2	

Illustration: 105-20

Model: 95B **Model life 2014>>**

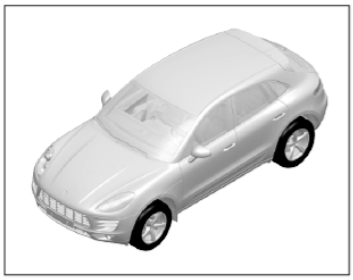

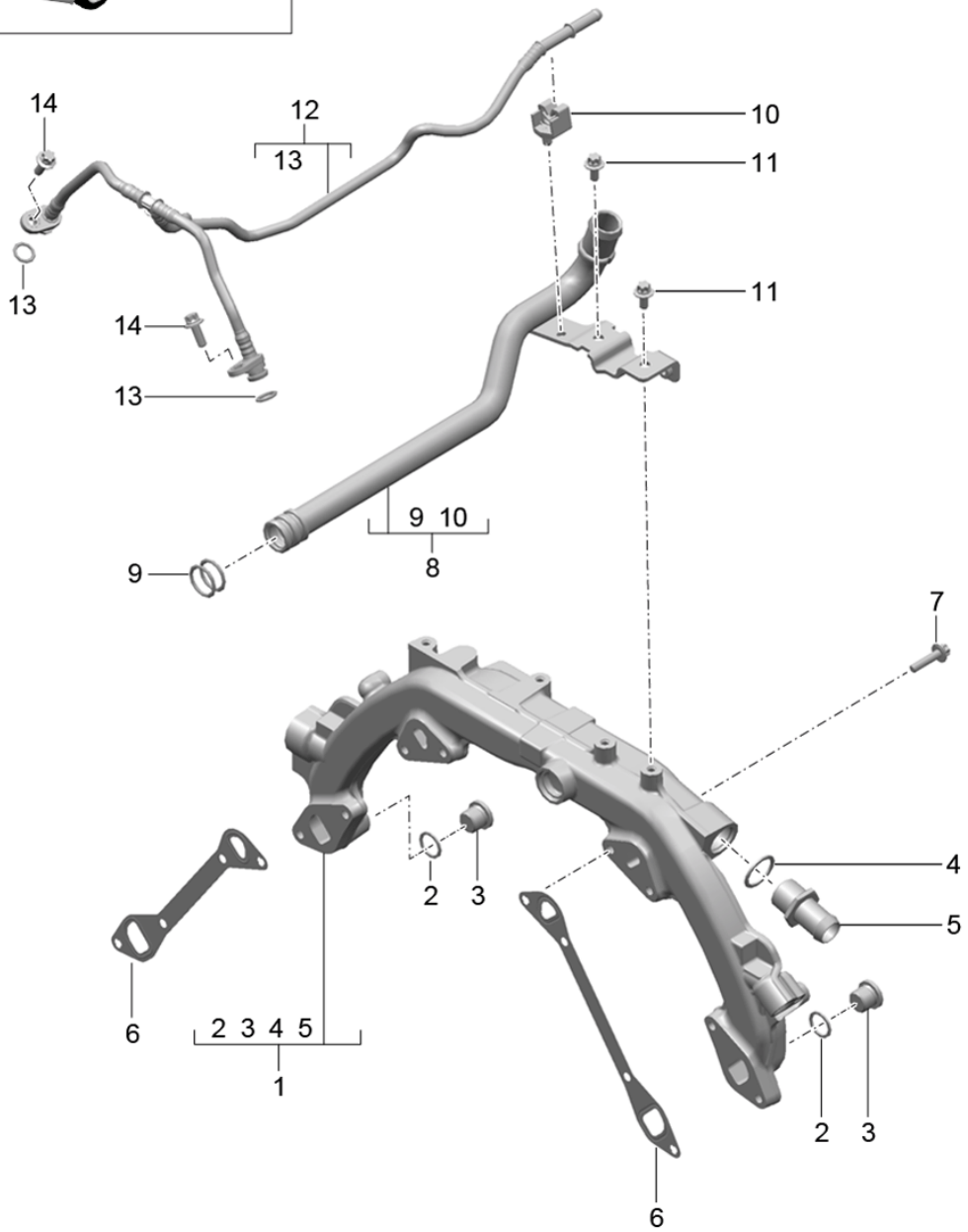

Illustration: 105-20

PORSCHE

Model: 95B **Model life 2014>>**

Pos	Part Number	Description	Remark	Qty	Model
		Water cooling 1			MCT.LA/MA MDC.NA
1	948 106 061 76	Distributor tube		1	
2	900 123 131 30	Sealing ring A 16 X 20		2	
3	900 219 004 01	Screw plug M 16 X 1,5		2	
4	900 123 118 30	Sealing ring A 22 X 27		1	
5	948 106 261 02	Connecting piece M 22 X1,5		1	
6	948 106 154 01	Gasket		2	
7	900 385 072 01	Torx screw BM 6 X 25		8	
8	946 106 069 60	Cooling water tube Heating		1	
9	999 707 477 40	O-ring 19 X 3		2	
10	999 507 886 40	Hose holder 4,8 - 8		1	
11	900 385 041 01	Torx screw BM 6 X 12		2	
12	946 106 026 60	Vent line		1	
13	999 707 586 40	O-ring 11 X 2,5		2	
14	900 385 009 01	Torx screw BM 6 X 16		2	

Illustration: 105-25

PORSCHE

Model: 95B **Model life 2014>>**

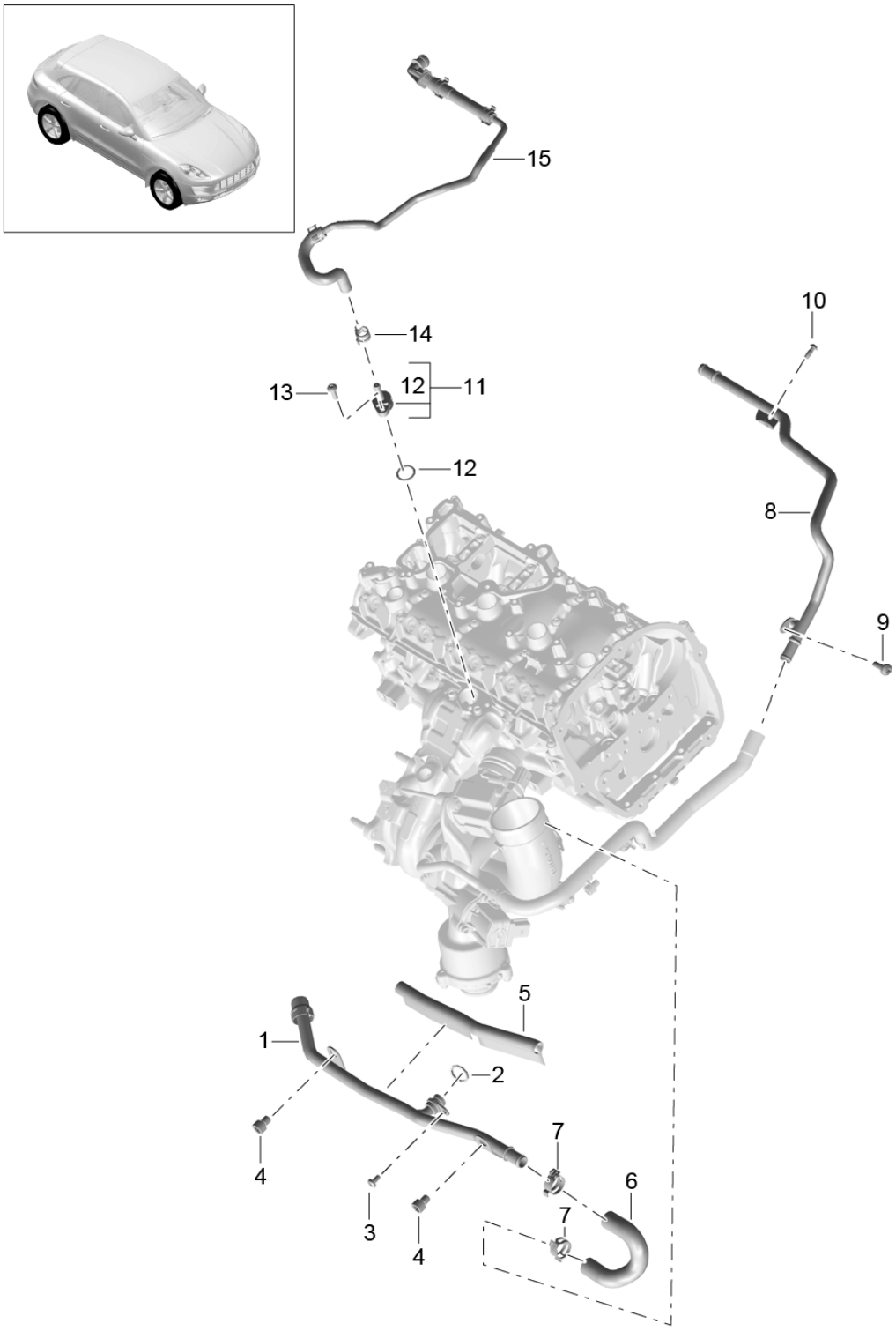

Illustration: 105-25

PORSCHE

Model: 95B **Model life 2014>>**

Pos	Part Number	Description	Remark	Qty	Model
		Water cooling 1			MCN.CC MCY.NA
1	958 121 085 00	Cool. water distrib. tube		1	
2	WHT 005 558	O-ring 14,5 X 2		1	
3	N 103 352 06	Round head screw M 6 X 12		1	
4	N 105 242 02	Pan-head screw M 10 X 12		2	
5	958 133 833 00	Heat shield		1	
6	958 121 051 00	Water hose		1	
7	N 906 869 01	Hose clamp D 23 X 12		2	
8	958 121 075 00	Cooling water tube		1	
9	N 104 514 09	Pan-head screw M 6 X 16		1	
10	N 107 214 01	Oval-head screw M 6 X 16		1	
11	958 121 143 00	Connection piece		1	
12	WHT 005 440	O-ring 20 X 2,5		1	
13	N 910 991 01	Round head screw M 6 X 20		1	
14	N 909 865 01	Hose clamp BM 14,5 X 12		1	
15	958 121 081 00	Cooling water tube		1	MCN.CC
(15)	958 121 081 10	Cooling water tube		1	MCY.NA

Illustration: 105-30

PORSCHE

Model: 95B **Model life 2014>>**

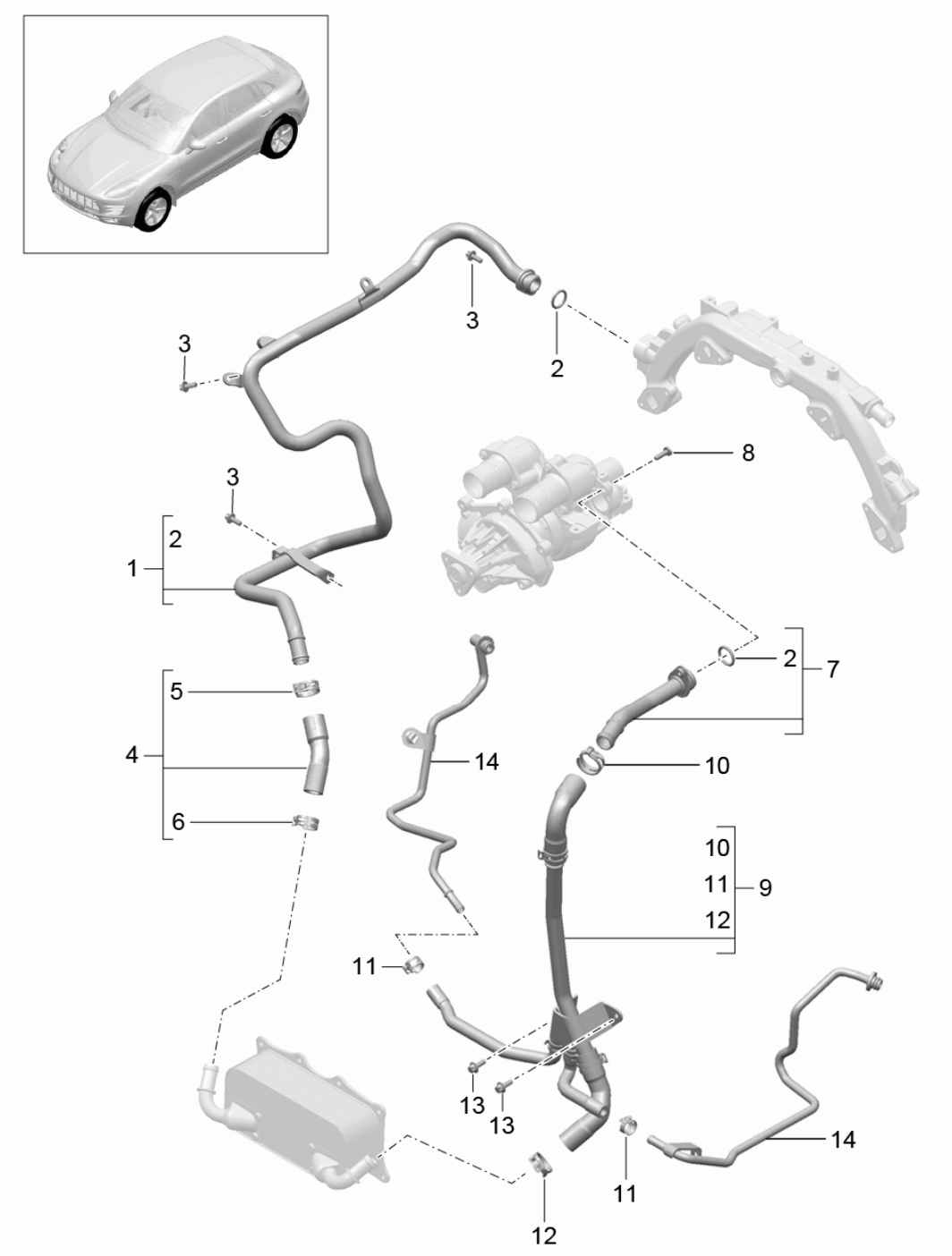

Illustration: 105-30

PORSCHE

Model: 95B **Model life 2014>>**

Pos	Part Number	Description	Remark	Qty	Model
		Water cooling 2			MCT.LA/MA MDC.NA
1	946 106 022 32	Cooling water tube Supply		1	
2	999 701 825 40	O-ring 19,6 X 3,53		2	
3	900 385 009 01	Torx screw BM 6 X 16		3	
4	946 106 457 30	Water hose Supply		1	
5	999 512 658 09	Hose clamp B 27 X 12		1	
6	999 512 656 09	Hose clamp B 25 X 12		1	
7	946 106 421 60	Cooling water tube Return line		1	
8	999 073 344 01	Round head screw M 6 X 20		1	
9	946 106 051 31	Water hose Complete Return line		1	
(9)	946 106 051 33	Water hose Complete Return line		1	
10	999 512 658 09	Hose clamp B 27 X 12		1	
11	999 512 686 09	Hose clamp B 17 X 12		2	
12	999 512 656 09	Hose clamp B 25 X 12		1	
13	900 385 009 01	Torx screw M 6 X 16		2	
14		Return line Turbocharger See illustrations 2/02/80		2	

Illustration: 105-35

PORSCHE

Model: 95B **Model life 2014>>**

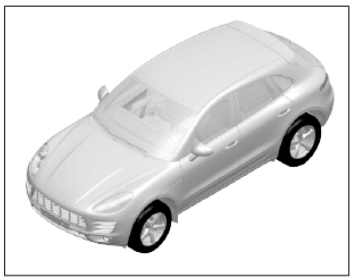

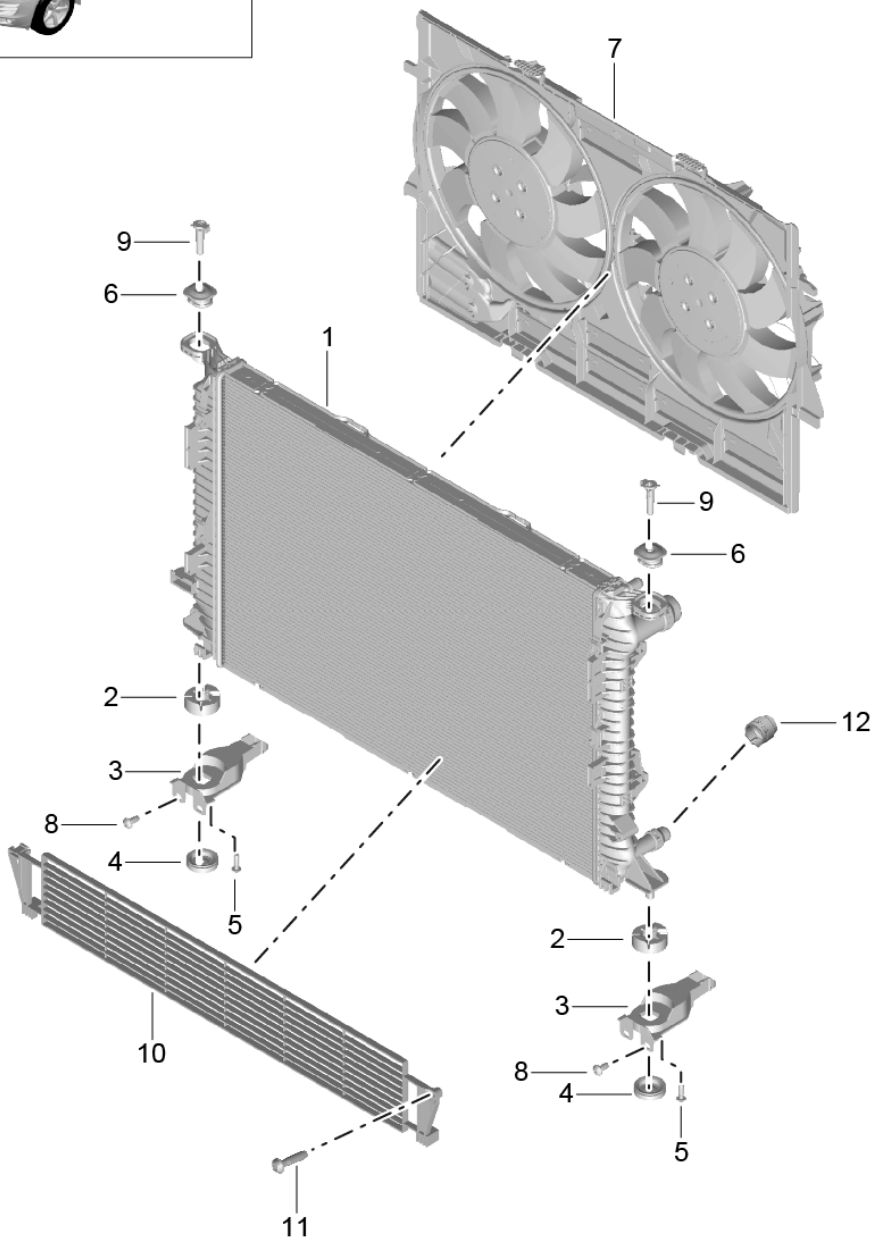

Model: 95B **Model life 2014>>**

Pos	Part Number	Description	Remark	Qty	Model
		Water cooling 3			MCD.UD MCT.BA/BB/LA MCT.MA
		Radiator			MCT.BC MDC.NA
1	95B 121 251	Radiator Use also: 4D0.133.335		1 1	MCT.LA
(1)	95B 121 251 A	Radiator Use also: 9A7.133.335.00		1 1	MCT.LA
(1)	8K0 121 251 AA	Radiator		1	MCD.UD MCT.BA/BB/BC
(1)		Radiator Use also: 4D0.133.335		1 1	MCT.MA
(1)	8K0 121 251 AL	Radiator		1	MCD.UD MCT.BA/BB/BC
(1)		Radiator Use also: 4D0.133.335		1 1	MCT.MA
2	8K0 121 276 A	Buffer Upper		2	
3	95B 121 093 A	Support		2	MCT.LA/MA MDC.NA
(3)	95B 121 093	Support		2	MCD.UD MCT.BA/BB/BC
4	4H0 121 268 A	Washer Lower		2	
5	N 104 734 02	Lens-head screw TP 6 X 20		2	
(5)	N 908 170 03	Oval-head screw TP 6 X 17		2	
6	8K0 121 275 C	Bearing Upper		2	
7	95B 121 003	Cooling air duct with Fan		1	
(7)	95B 121 003 A	Cooling air duct with Fan		1	
8	N 909 675 02	Oval-head screw TP 7 X 16		2	
9	WHT 001 506 A	Bolt 19 X 46,2		2	
10	95B 820 746 A	Protective grille Radiator		1	MCT.LA/MA MDC.NA
11	N 907 315 03	Oval-head screw		1	MCT.LA/MA MDC.NA
12	4D0 133 335	Cap		1	MCT.LA/MA

Illustration: 105-37

PORSCHE

Model: 95B **Model life 2014>>**

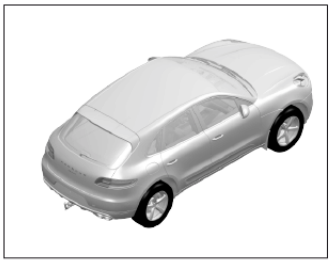

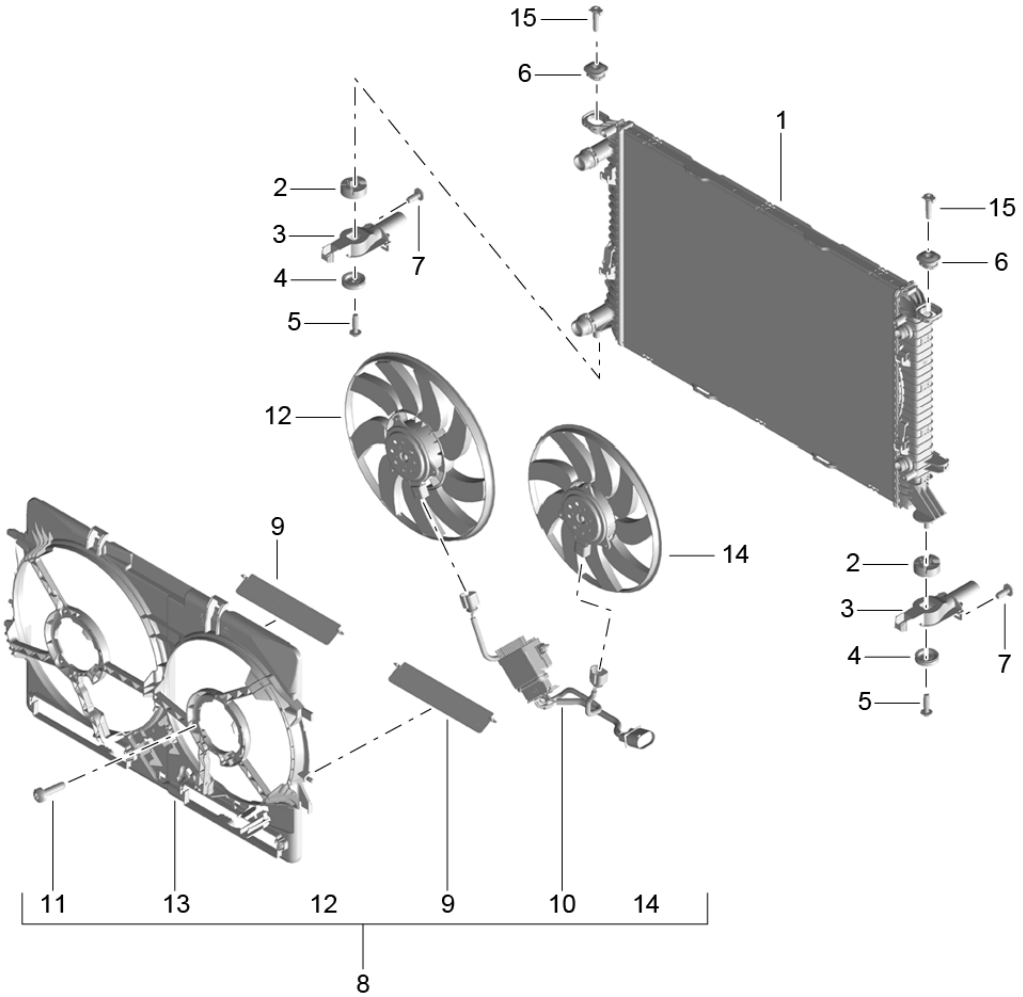

Model: 95B **Model life 2014>>**

Pos	Part Number	Description	Remark	Qty	Model
		Water cooling 3			MCN.CC MCY.NA/NB/PA -IB0N
		Radiator			
1	8K0 121 251 AH	Radiator		1	
2	8K0 121 276 A	Buffer Lower		2	
3	95B 121 093	Support		2	
4	4H0 121 268 A	Washer Lower		2	
5	N 908 170 03	Oval-head screw M 6 X 17		2	
6	8K0 121 275 C	Bearing		2	
7	N 909 675 02	Oval-head screw M 7 X 16		2	
8	8K0 121 003 P	Cooling air duct with Fan		1	-IB0N
9	8K0 121 223 A	Flap Cooling air duct		2	-IB0N
10	8K0 959 501 G	Control unit Cooling air duct		1	-IB0N
11	N 907 850 02	Oval-head screw M 5 X 16		6	-IB0N
12	8K0 959 455 K	Fan 400W		1	-IB0N
13	8K0 121 207 A	Air box		1	-IB0N
14	8K0 959 455 M	Fan 200W		1	-IB0N
15	WHT 001 506 A	Bolt 19 X 46,2		2	

Illustration: 105-38

PORSCHE

Model: 95B **Model life 2014>>**

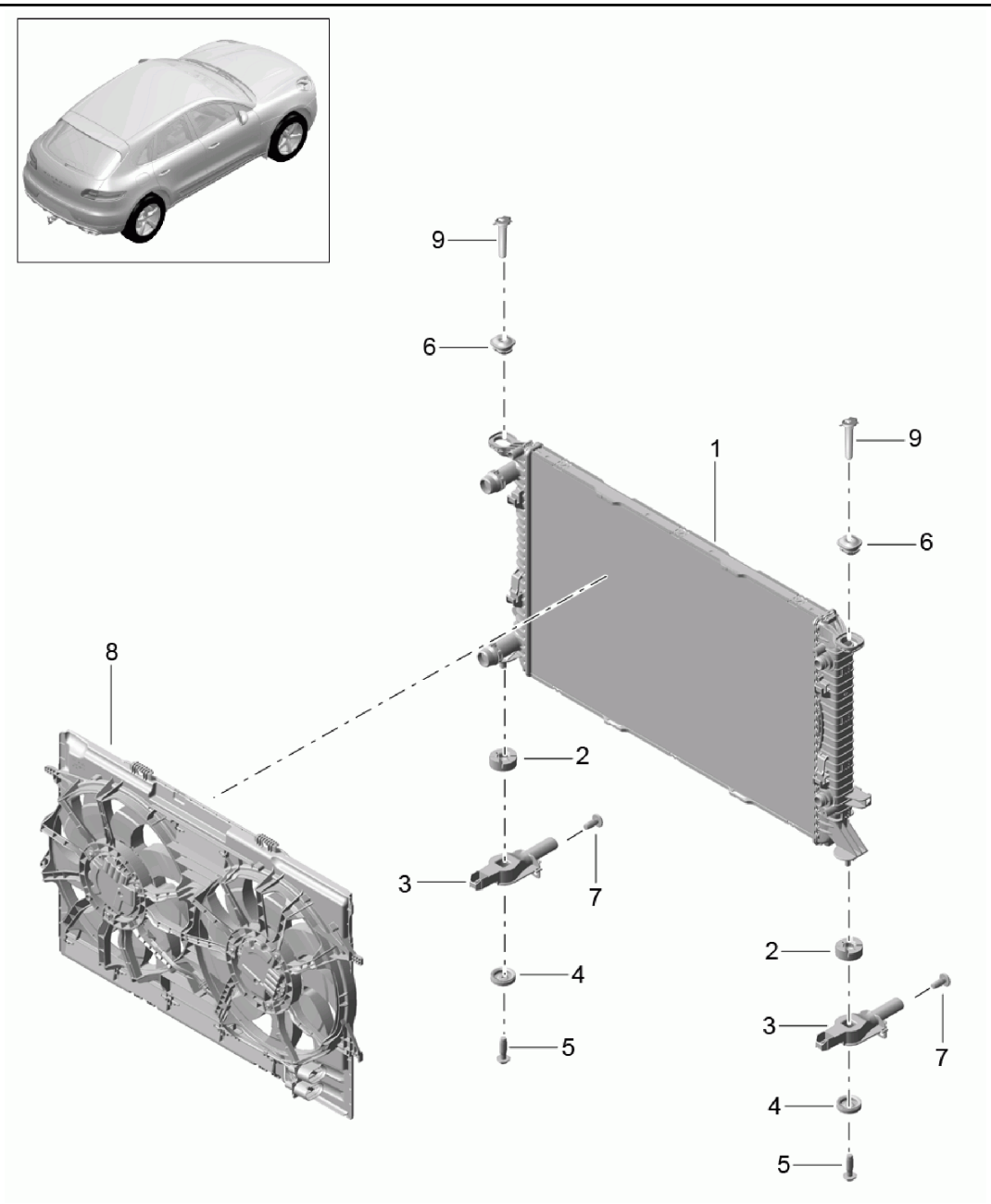

Model: 95B **Model life 2014>>**

Pos	Part Number	Description	Remark	Qty	Model
		Water cooling 3			MCN.CC MCY.NA/NB/PA IB0N
		Radiator			
1	8K0 121 251 AH	Radiator		1	
2	8K0 121 276 A	Buffer Lower		2	
3	95B 121 093	Support		2	
4	4H0 121 268 A	Washer Lower		2	
5	N 908 170 03	Oval-head screw M 6 X 17		2	
6	8K0 121 275 C	Bearing		2	
7	N 909 675 02	Oval-head screw M 7 X 16		2	
8	95B 121 003 A	Cooling air duct with Fan		1	IB0N
9	WHT 001 506 A	Bolt M 19 X 46,2		2	

Illustration: 105-40

PORSCHE

Model: 95B **Model life 2014>>**

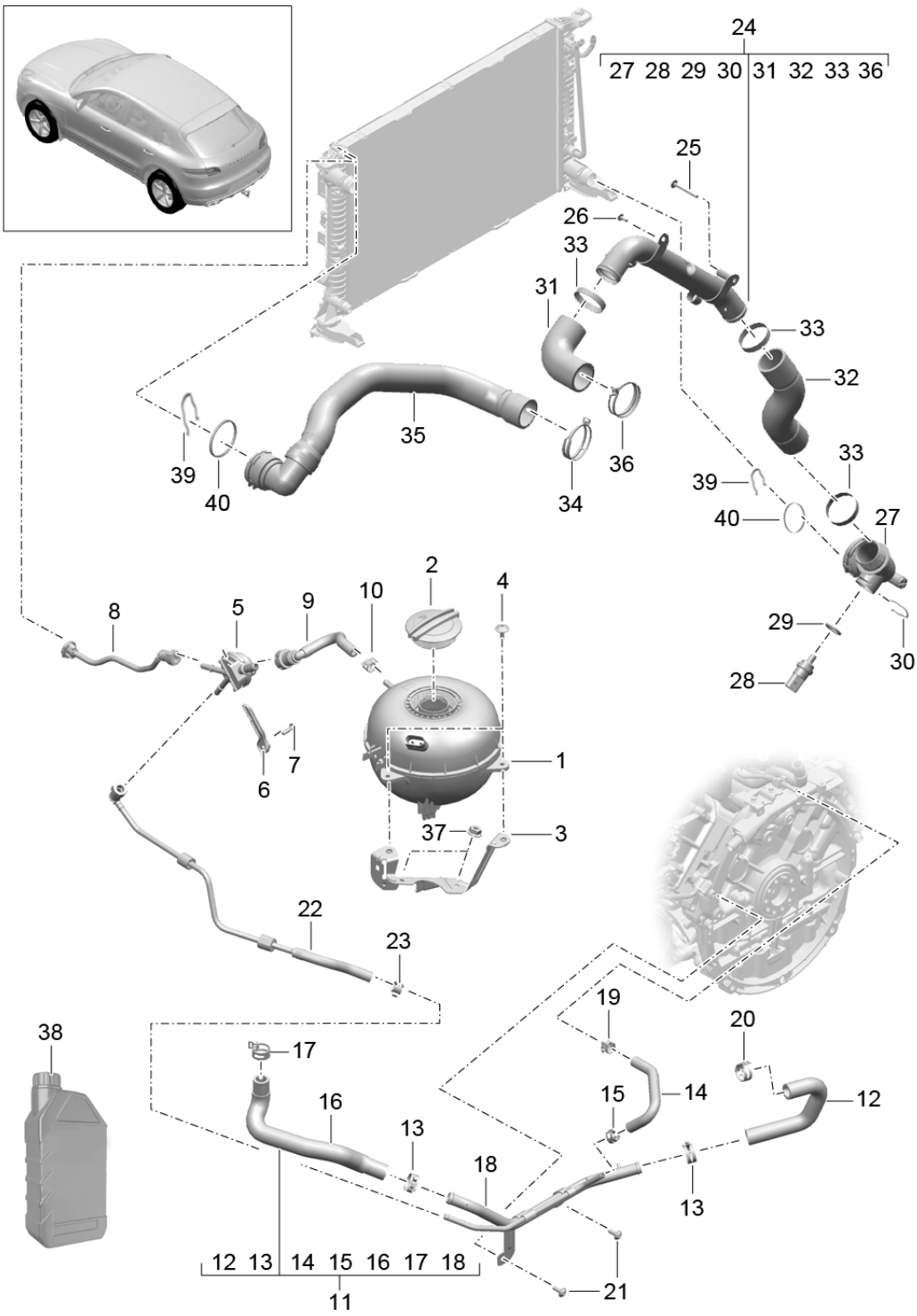

Model: 95B **Model life 2014>>**

Pos	Part Number	Description	Remark	Qty	Model
		Water cooling 4			MCT.LA/MA MDC.NA
		Water reservoir			
1	95B 121 407	Water reservoir with Sensor		1	
2	958 106 447 00	Lid		1	
3	95B 121 079	Support		1	
4	N 911 883 01	Outer hexagon round screw M 6 X 20		2	
5	7P5 121 671	Bleeder valve		1	
(5)	7P5 121 671 A	Bleeder valve		1	
6	970 106 449 00	Support Bleeder valve		1	
7	N 104 734 02	Lens-head screw Support		1	
8	95B 122 447	Vent line		1	
(8)	95B 122 447 E	Vent line		1	
9	95B 122 447 C	Vent line		1	
10	N 906 867 01	Hose clamp B 14 X 12		1	
11	95B 121 049	Cooling water tube		1	
(11)	95B 121 049 F	Cooling water tube		1	
12	95B 121 130 A	Water hose		1	
13	999 512 683 09	Hose clamp B 23 X 12		2	
14	95B 121 130 B	Water hose		1	
15	999 512 651 09	Hose clamp B 15 X 12		1	
16	95B 121 130 C	Water hose		1	
17	N 912 008 01	Hose clamp B 23 X 12		1	
(17)	999 512 683 09	Hose clamp B 23 X 12		1	
18	95B 121 065 A	Water line with Support		1	
19	999 512 651 09	Hose clamp B 15 X 12		1	
20	N 906 869 01	Hose clamp B 24 X 12		1	
21	N 106 320 03	Oval-head screw M 6 X 16		2	
22	95B 121 447	Vent line		1	
23	N 906 867 01	Hose clamp B 14 X 12		1	
24	95B 121 109 E	Cooling water tube Return line		1	
25	N 104 474 02	Lens-head screw M 6 X 45		1	
26	N 103 352 07	Round head screw M 6 X 12		1	
27		Clutch To Use 95B.121.109.E		1	
28	955 106 125 01	Temperature sensor		1	
29	N 903 168 01	Round seal		1	
30	955 106 143 00	Retainer spring		1	
31		Water hose To Use		1	

Model: 95B **Model life 2014>>**

Pos	Part Number	Description	Remark	Qty	Model
		95B.121.109.E			
32		Water hose		1	
		To			
		Use			
		95B.121.109.E			
33		Hose clamp		3	
		To			
		Use			
		95B.121.109.E			
34	N 909 265 01	Hose clamp		1	
		B 47 X 12			
35	95B 122 101 D	Water hose		1	
		Supply			
36	N 909 265 01	Hose clamp		1	
		B 47 X 12			
37	N 015 082 10	Hexagon nut		2	
		M 6			
38	000 043 301 47	Antifreeze		X	
		1 LTR.			
		Container			
(38)	000 043 301 48	Antifreeze		X	
		20 LTR.			
		Container			
(38)	000 043 204 39	Cleaning agent		X	
		20 LITER			
		Container			
39	4E0 121 142	Retainer spring		2	
		Cooling water tube			
40	N 909 331 01	O-ring		2	
		38 X 4			

Illustration: 105-50

PORSCHE

Model: 95B **Model life 2014>>**

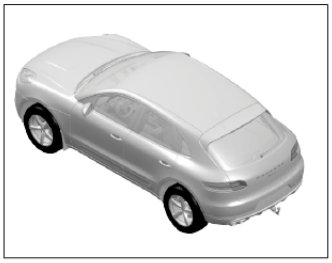

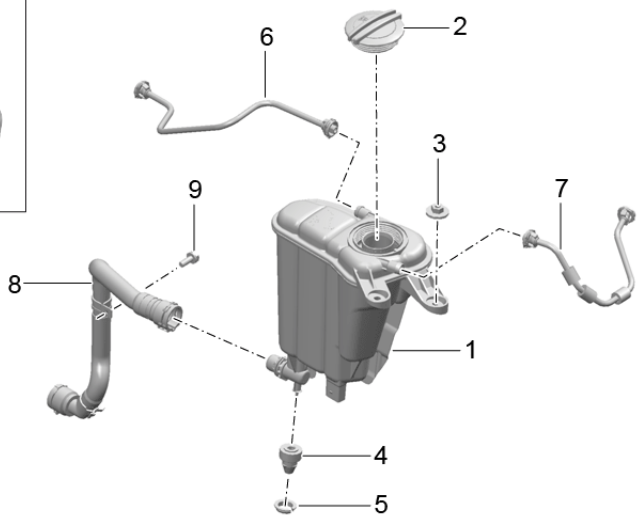

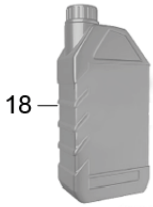

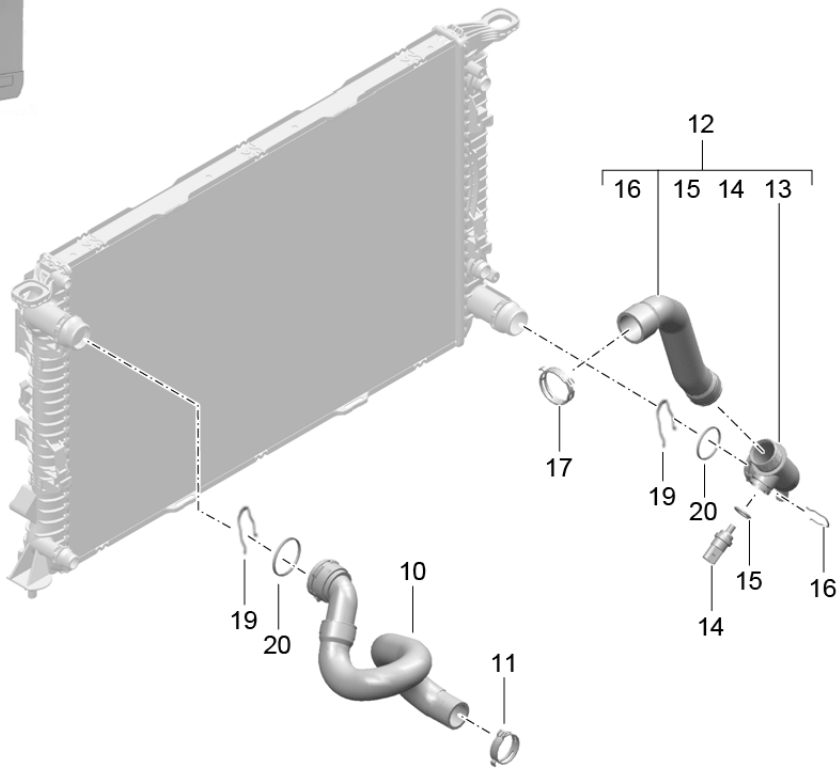

Model: 95B **Model life 2014>>**

Pos	Part Number	Description	Remark	Qty	Model
		Water cooling 4			MCD.UD MCT.BA/BB/BC
		Water reservoir			
1	8K0 121 405 M	Water reservoir		1	
2	958 106 447 00	Lid		1	
3	N 905 708 03	Hexagon nut M 6		2	
4	8K0 129 669	Grommet		1	
5	8R0 121 585	Grommet		1	
6	95B 122 447 B	Vent line		1	
(6)	95B 122 447 F	Vent line		1	
7	95B 121 447 B	Vent line		1	
(7)	95B 121 447 F	Vent line		1	
8	95B 121 049 B	Cooling water tube		1	
9	N 100 829 08	Combination screw M 6 X 16		1	
(9)	N 100 829 12	Combination screw M 6 X 16		1	
10	95B 122 101 B	Water hose Supply		1	
11	N 906 872 01	Hose clamp		1	
12	95B 121 109 B	Water hose Return line		1	
13		Clutch Use 95B.122.101.B		1	
14	955 106 125 01	Temperature sensor		1	
15	N 903 168 01	Round seal 19,6 X 3,6		1	
16	955 106 143 00	Retainer spring		1	
17	N 909 265 01	Hose clamp B 47 X 12		2	
18	000 043 301 47	Antifreeze 1 LTR. Container		X	
(18)	000 043 301 48	Antifreeze 20 LTR. Container		X	
(18)	000 043 204 39	Cleaning agent 20 LITER Container		X	
19	4E0 121 142	Retainer spring Cooling water tube		2	
20	N 909 331 01	O-ring 38 X 4		2	

Illustration: 105-60

PORSCHE

Model: 95B **Model life 2014>>**

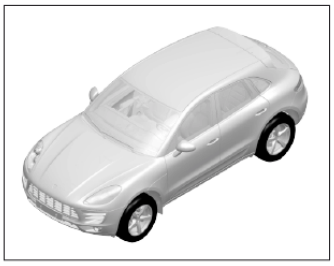

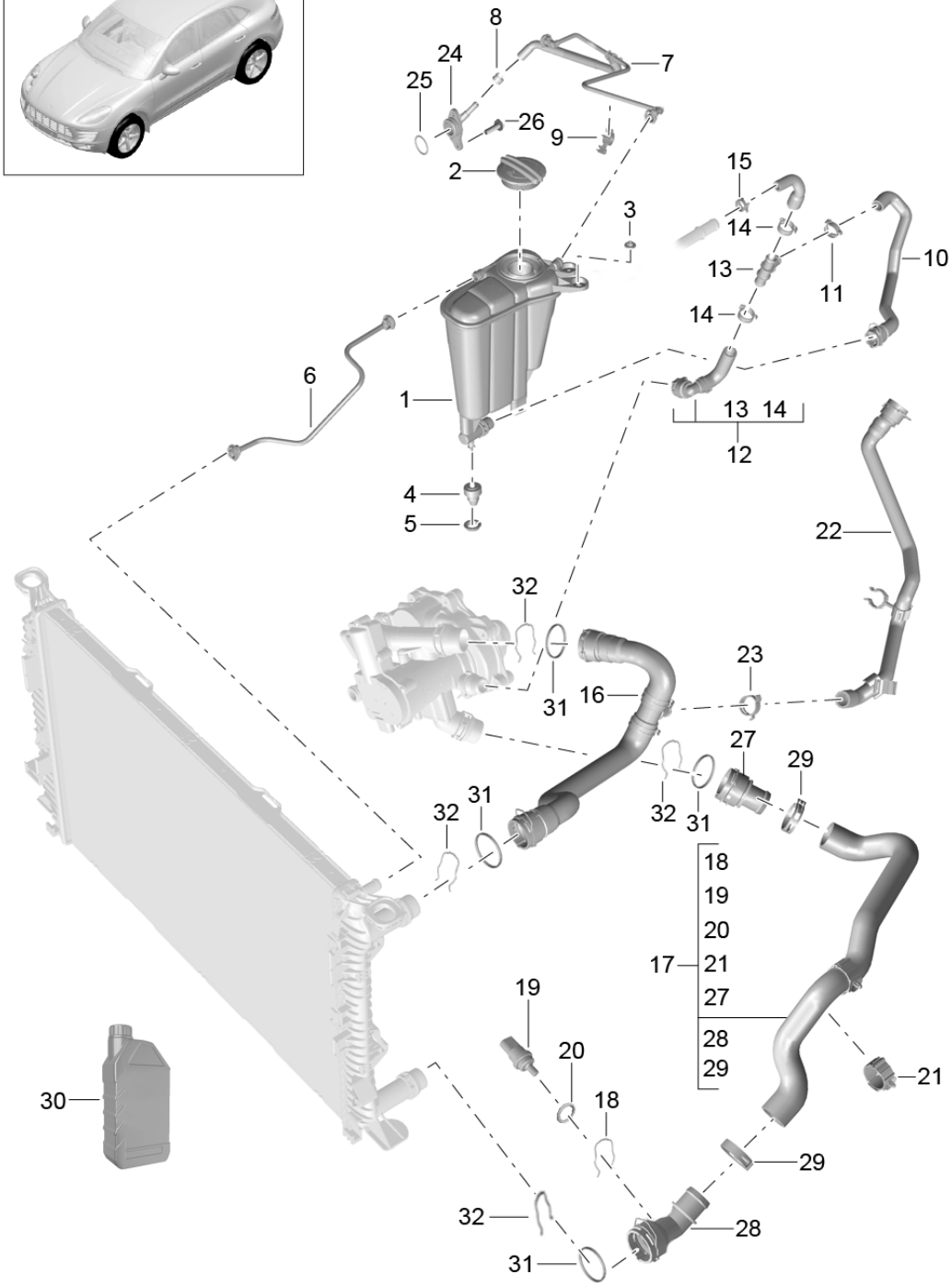

Model: 95B **Model life 2014>>**

Pos	Part Number	Description	Remark	Qty	Model
		Water cooling 4			MCN.CC MCY.NA/NB/PA
		Water reservoir			
1	8K0 121 403 Q	Water reservoir		1	
2	958 106 447 00	Lid		1	
3	N 905 708 03	Hexagon nut		2	
4	8K0 129 669	Grommet		1	
5	8R0 121 585	Grommet		1	
6	95B 122 447 B	Vent line		1	
(6)	95B 122 447 F	Vent line		1	
7	95B 121 447 A	Vent line		1	
8	N 907 702 01	Hose clamp B 17 X 12		1	
9	999 507 905 40	Line bracket		1	
10	95B 121 049 A	Water hose		1	
11	N 906 870 01	Hose clamp B 27 X 12		1	
12	95B 121 049 E	Cooling water tube		1	
13	N 907 606 01	T-socket		1	
14	N 906 871 01	Hose clamp B 27 X 12		2	
15	999 512 654 09	Hose clamp B 21 X 12		1	
16	95B 122 101 A	Water hose Supply		1	
17	95B 121 109 F	Water hose Return line		1	
-	999 651 361 40	Support Refrigerant line		1	
18	955 106 143 00	Retainer spring		1	
19	955 106 125 01	Temperature sensor		1	
20	N 903 168 01	Round seal		1	
21	WHT 006 829	Support		1	
22	95B 121 056 A	Water hose		1	I9M1/9M9
(22)	95B 121 056	Water hose		1	I9M0
23	N 906 870 01	Hose clamp B 27 X 12		1	I9M1/9M9
(23)		Hose clamp		2	I9M0
24	958 121 132 00	Connection piece		1	
25	WHT 001 688	O-ring 32 X 3		1	
26	N 910 991 01	Round head screw M 6 X 20		2	
27	3B0 122 291 C	Clutch		1	
28	8K0 122 293 AE	Clutch		1	
29	999 512 665 09	Hose clamp		2	
30	000 043 301 47	Antifreeze 1 LTR. Container		X	
(30)	000 043 301 48	Antifreeze 20 LTR. Container		X	
(30)	000 043 204 39	Cleaning agent 20 LITER Container		X	
31	N 907 653 01	O-ring 32 X 4		4	
32	1J0 121 142	Retainer spring Cooling water tube		4	

Illustration: 105-70

Model: 95B **Model life 2014>>**

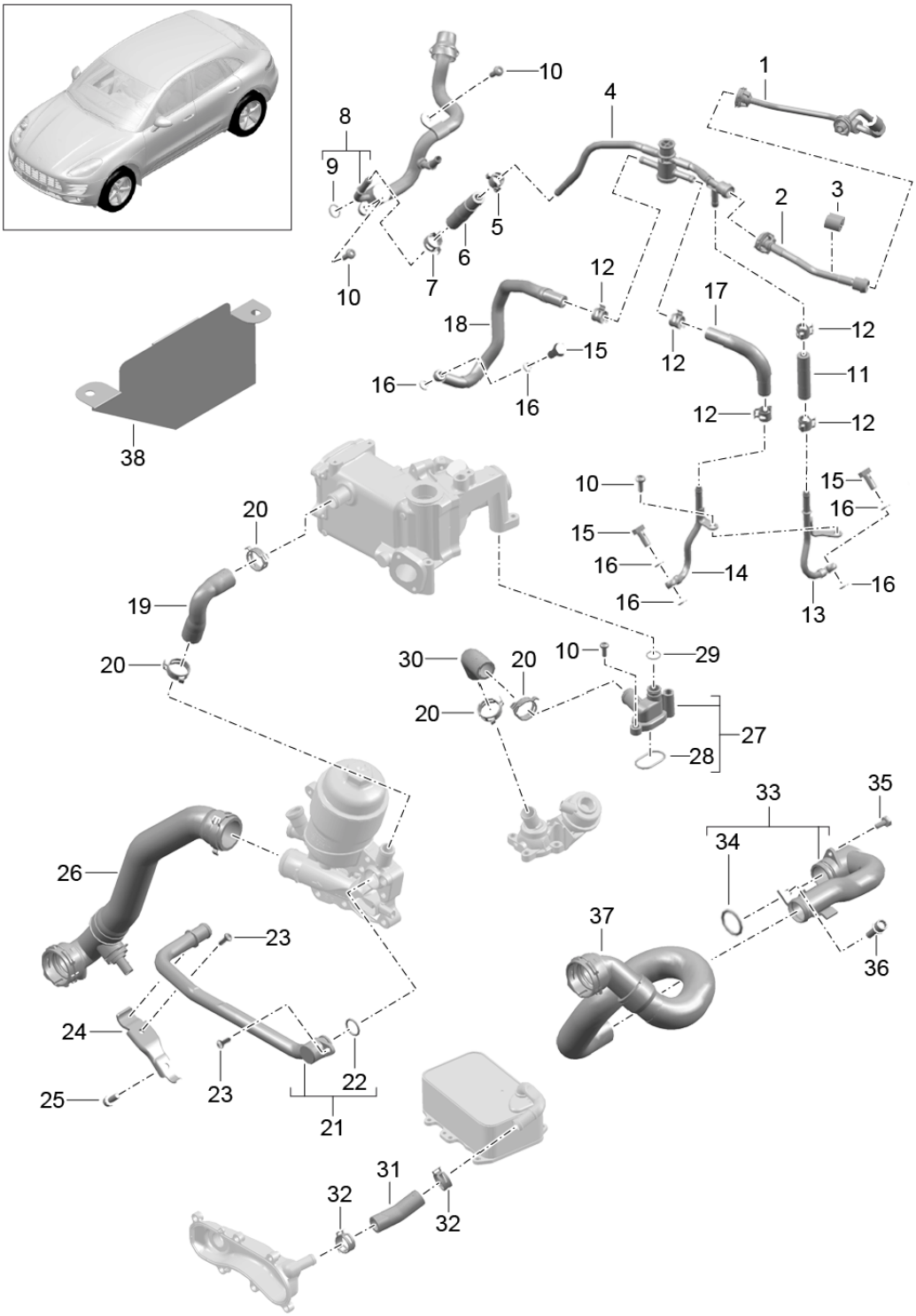

Model: 95B **Model life 2014>>**

Pos	Part Number	Description	Remark	Qty	Model
		Water cooling 4			MCD.UD MCT.BA/BB/BC
1		Vent line See illustrations 1/05/50 POS.6		1	
2	958 106 314 01	Vent line Rear		1	
3	N 107 162 01	Spacer B 8 X 18 X 20		1	
4	958 106 086 00	Cooling water tube		1	
5	N 906 867 01	Hose clamp B 14 X 12		1	
6	958 106 456 00	Water hose		1	
7	N 907 702 01	Hose clamp B 17 X 12		1	
8	958 106 065 00	Cooling water tube		1	MCD.UD
(8)	958 106 065 20	Cooling water tube		1	MCT.BA/BB/BC
9	N 908 091 02	O-ring 16 X 2		1	
10	N 104 514 08	Lens-head screw M 6 X 16		4	
11	958 106 455 00	Water hose		1	
12	N 906 867 01	Hose clamp B 14 X 12		5	
13	958 106 399 10	Cooling water tube		1	
14	958 106 466 01	Breather pipe		1	
15	N 910 438 01	Banjo bolt 8		3	
16	N 013 807 6	Sealing ring A 8 X 11,5		6	
17	958 106 453 01	Water hose		1	
18	958 106 454 01	Water hose		1	
19	958 106 513 00	Water hose		1	
20	N 906 870 01	Hose clamp B 27 X 12		4	
21	958 106 375 00	Cooling water tube		1	MCD.UD
(21)	059 121 075 EB	Cooling water tube		1	MCT.BA/BB/BC
22	958 106 537 00	O-ring 19,5 X 3		1	
23	N 104 514 08	Lens-head screw M 6 X 16		2	
24	958 106 593 00	Support		1	
25	N 106 449 01	Pan-head screw M 8 X 18		1	
26		Water hose See illustrations 1/05/50 POS.12		1	
27	958 106 506 02	Intermediate flange with Gasket		1	
28	958 106 749 05	Gasket Intermediate flange		1	
29	N 908 091 02	O-ring 16 X 2		1	
30	958 106 625 00	Water hose		1	
31	958 106 673 00	Water hose		1	
32	N 906 869 01	Hose clamp B 23 X 12		2	
33	059 121 071 CR	Cooling water tube		1	
34	N 902 753 02	O-ring 32 X 3		1	

Model: 95B **Model life 2014>>**

Pos	Part Number	Description	Remark	Qty	Model
35	N 104 514 08	Lens-head screw M 6 X 16		1	
36	N 106 389 01	Combination screw M 8 X 25		1	
37		Water hose See illustrations 1/05/50 POS.10		1	
38	958 106 755 11	Heat protection Vent line		1	MCT.BA/BB/BC

Illustration: 105-80

PORSCHE

Model: 95B **Model life 2014>>**

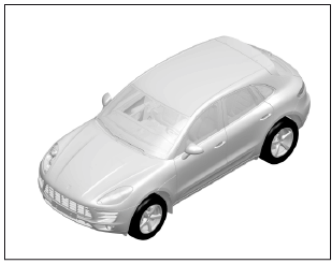

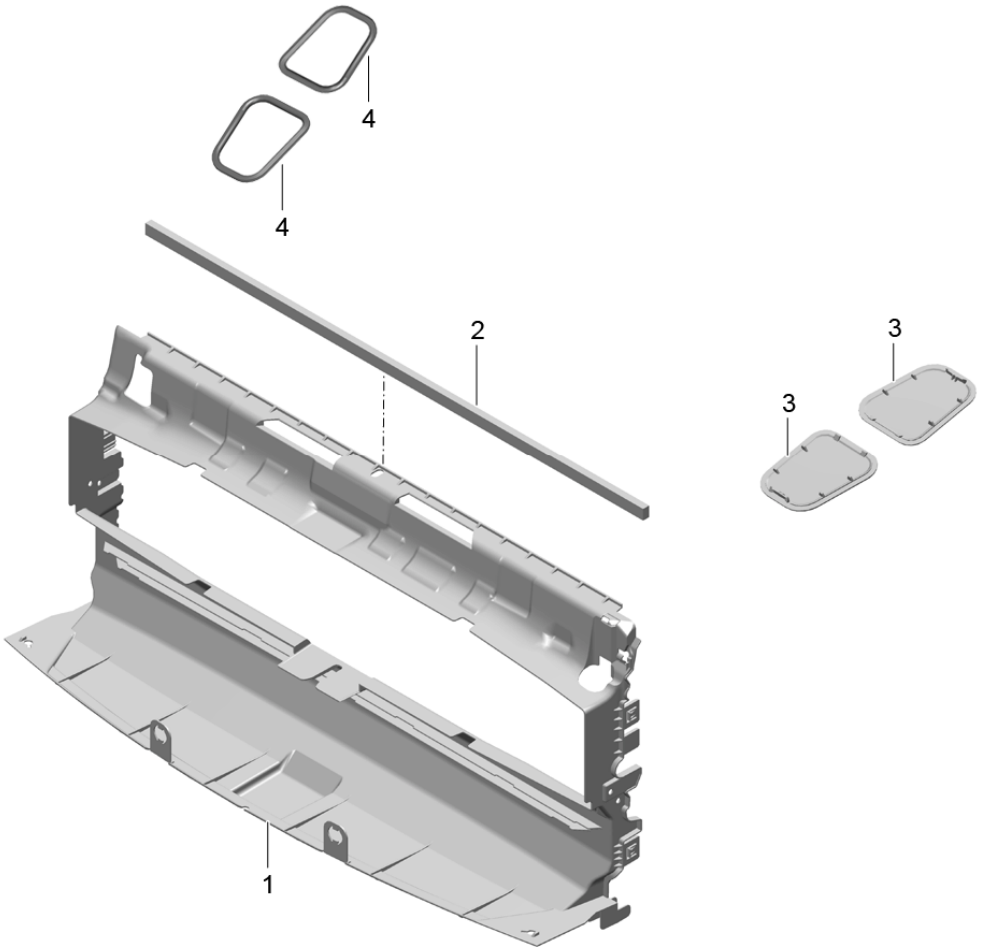

Model: 95B **Model life 2014>>**

Pos	Part Number	Description	Remark	Qty	Model
		Cooling air duct			
1	95B 121 707 B	Air duct Rear		1	MCT.LA/MA
(1)	95B 121 707 F	Air duct Rear		1	MDC.NA
(1)	95B 121 707 D	Air duct Rear		1	MCD.UD MCT.BA/BB/BC
(1)	95B 121 707 C	Air duct Rear	-16	1	MCN.CC MCY.NA/NB
(1)	95B 121 707 E	Air duct Rear		1	MCY.NA/NB/PA
(1)	95B 121 707 G	Air duct Rear	17-	1	MCY.NA/NB/PA
2	95B 129 049	Gasket Air duct Rear		1	
(2)	95B 129 049 A	Gasket Air duct Rear		1	
3	95B 129 119	Gasket		2	MCD.UD MCT.BA/BB/BC
(3)	95B 129 119 A	Gasket		2	MCD.UD MCN.CC MCT.BA/BB/BC MCY.NA/NB/PA
4	95B 129 970	Edge protection		2	MCN.CC MCY.NA/NB/PA

Illustration: 106-00

PORSCHE

Model: 95B **Model life 2014>>**

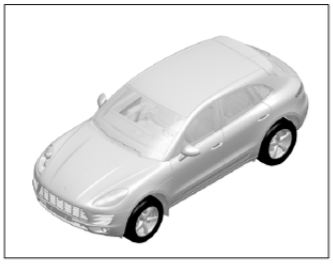

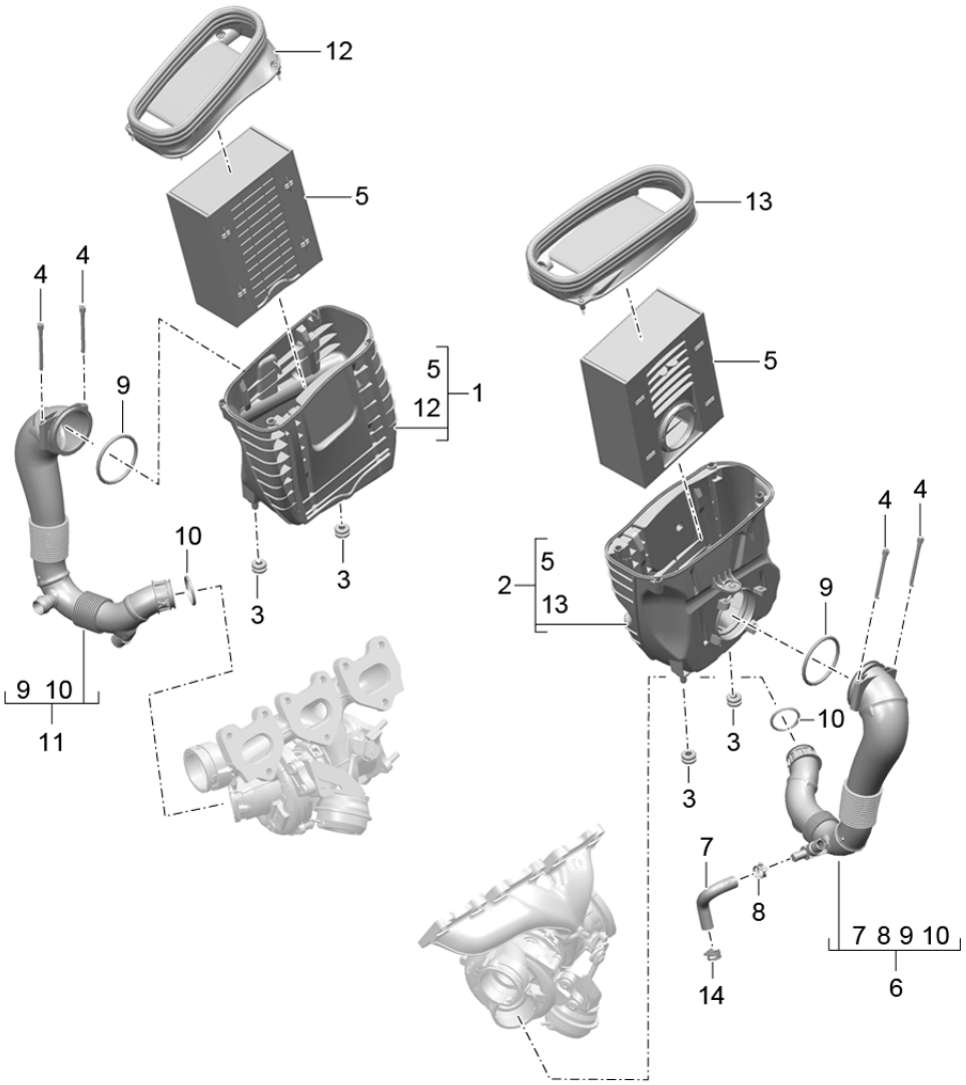

Model: 95B **Model life 2014>>**

Pos	Part Number	Description	Remark	Qty	Model
		Air cleaner system			MCT.LA/MA MDC.NA
1	95B 129 607	Air cleaner	/R	1	I1L0
(1)	95B 129 607 A	Air cleaner	/R	1	I1L1
2	95B 128 607	Air cleaner	/L	1	I1L0
(2)	95B 128 607 A	Air cleaner	/L	1	I1L1
3	955 110 669 00	Grommet		4	
4	955 110 269 00	Bolt		4	
5	95B 129 620	Air cleaner cartridge		2	I1L0
(5)	95B 129 620 A	Air cleaner cartridge		2	I1L1
6	95B 128 532 A	Intake manifold	/L	1	MCT.LA/MA
(6)	95B 128 532 B	Intake manifold	/L	1	MDC.NA
7	95B 145 845	Pressure hose		1	
8	999 512 654 09	Hose clamp B 21 X 12		1	
9	999 707 678 40	O-ring 79 X 6		2	
10	3C0 145 117	Sealing ring		2	
11	95B 129 532 A	Intake manifold	/R	1	MCT.LA/MA
(11)	95B 129 532 B	Intake manifold	/R	1	MDC.NA
12	95B 129 752	Connection piece with Rubber seal	/R	1	
(12)	95B 129 752 B	Connection piece with Rubber seal	/R	1	
13	95B 128 752	Connection piece with Rubber seal	/L	1	
(13)	95B 128 752 A	Connection piece with Rubber seal	/L	1	
14	4G0 145 917	Hose clamp B 21 X 12		1	

Illustration: 106-10

PORSCHE

Model: 95B **Model life 2014>>**

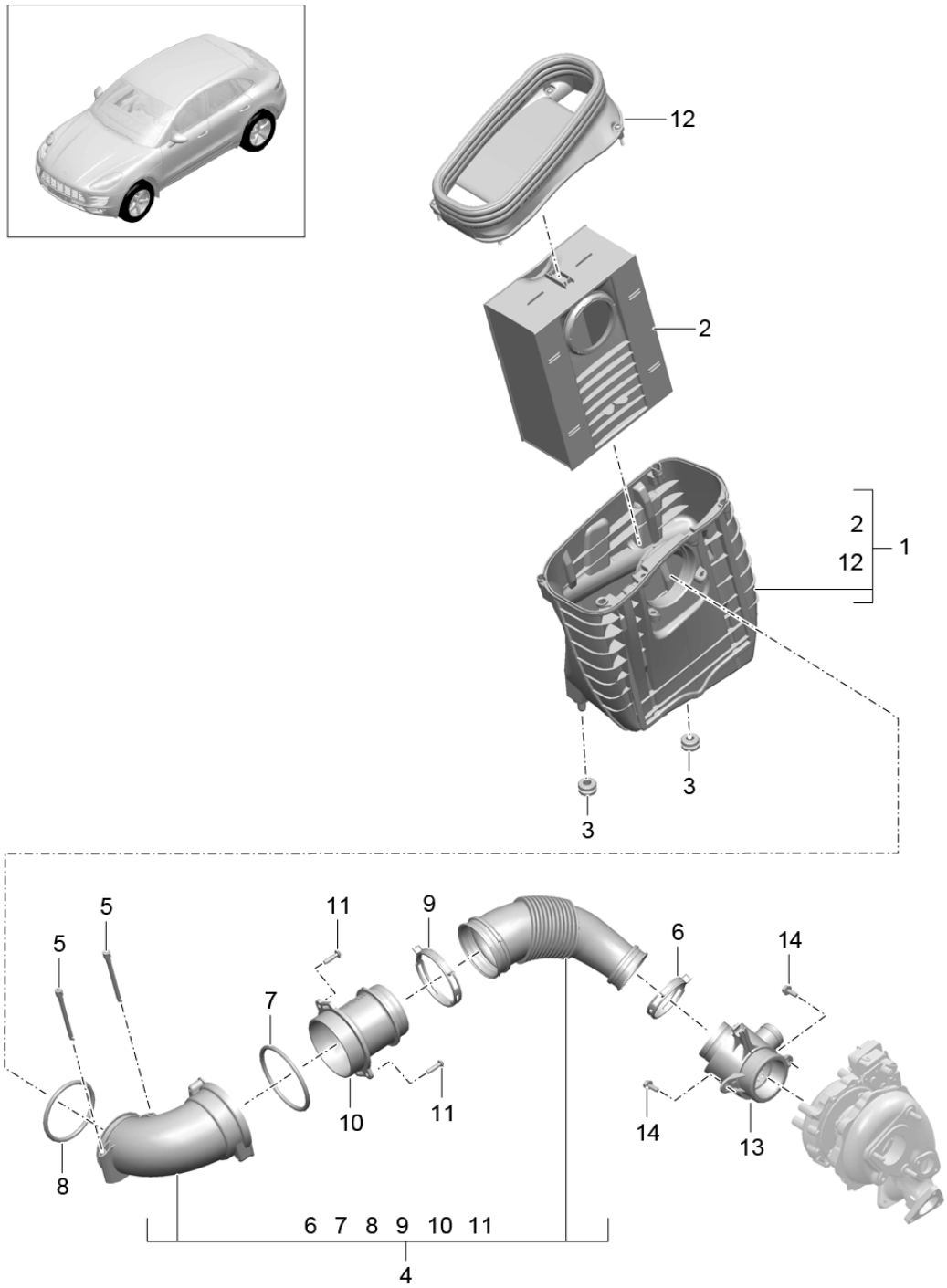

Illustration: 106-10

PORSCHE

Model: 95B **Model life 2014>>**

Pos	Part Number	Description	Remark	Qty	Model
		Air cleaner system			MCD.UD MCT.BA/BB/BC
1	95B 129 601	Air cleaner		1	I1L0
(1)	95B 129 601 A	Air cleaner		1	I1L1
2	95B 129 620	Air cleaner cartridge		1	I1L0
(2)	95B 129 620 A	Air cleaner cartridge		1	I1L1
3	955 110 669 00	Grommet		2	
4	95B 129 609	Intake manifold		1	
5	955 110 269 00	Bolt		1	
6	N 907 816 01	Hose clamp A 60 X 12		1	
7	N 909 643 01	Round seal 91 X 6		1	
8	999 707 678 40	O-ring 79 X 6		1	
9	N 906 564 01	Hose clamp A 80 X 12		1	
10	955 606 123 50	Mass air flow meter		1	
11	N 106 112 01	Oval-head sheetmetal screw TP 6 X 22		2	
12	95B 129 752	Connection piece with Rubber seal		1	
(12)	95B 129 752 B	Connection piece with Rubber seal		1	
13	958 110 055 01	Pulsation damper		1	
14	N 107 188 01	Hexagon-head bolt M 6 X 16		2	

Illustration: 106-20

PORSCHE

Model: 95B **Model life 2014>>**

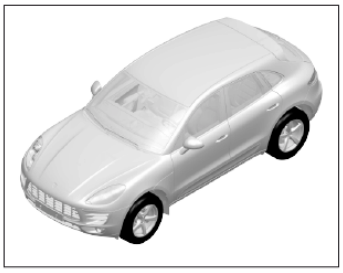

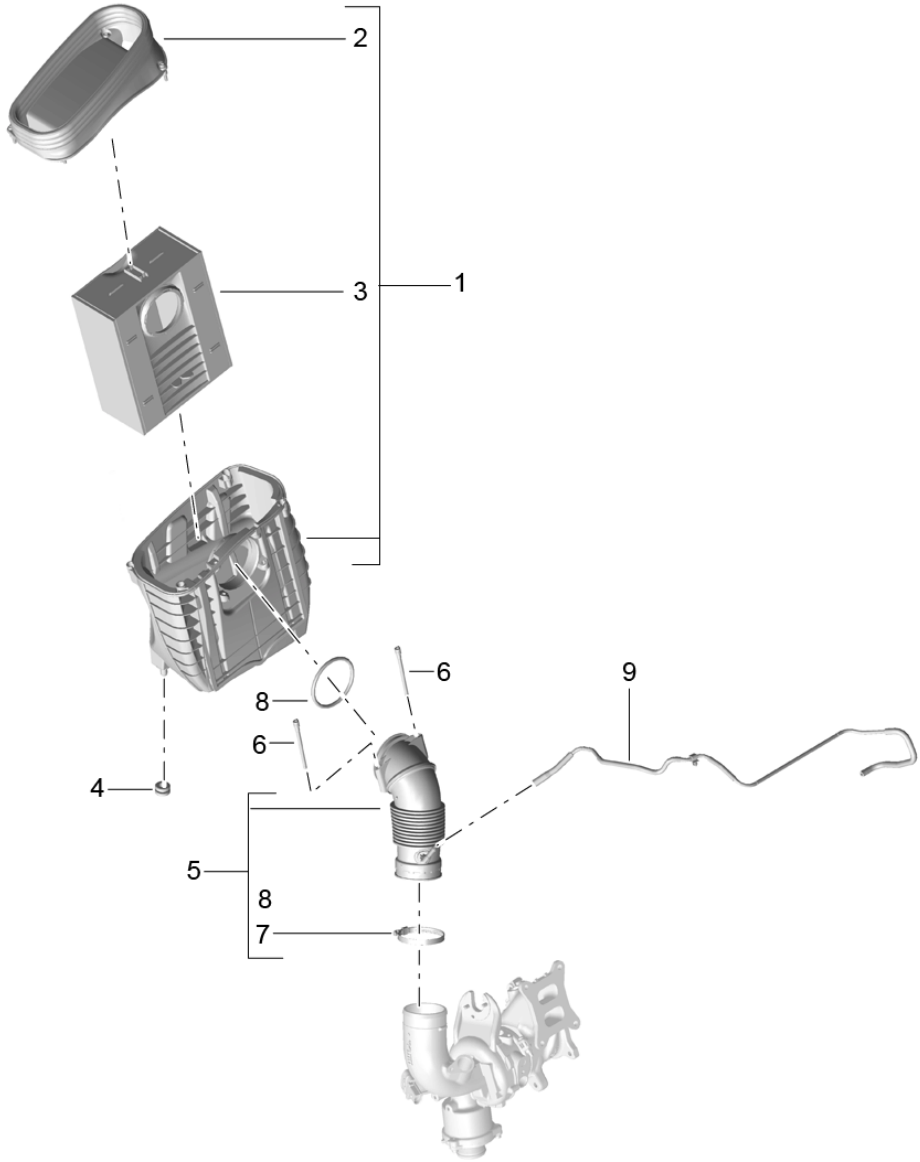

Model: 95B **Model life 2014>>**

Pos	Part Number	Description	Remark	Qty	Model
		Air cleaner system			MCN.CC MCY.NA/NB/PA
1	95B 129 601 C	Air cleaner		1	
(1)	95B 129 601 F	Air cleaner		1	
2	95B 129 752 C	Connection piece Air cleaner		1	
3	95B 129 620	Air cleaner cartridge		1	I1L0
(3)	95B 129 620 A	Air cleaner cartridge		1	I1L1
4	955 110 669 00	Grommet		2	
5	95B 129 531 A	Intake manifold		1	
6	955 110 269 00	Bolt		1	
7	N 024 522 6	Hose clamp A 60 X 9		1	
8	999 707 678 40	O-ring 79 X 6		1	
9		Connecting hose See illustrations 1/07/67 POS.11		1	

Illustration: 107-00

PORSCHE

Model: 95B **Model life 2014>>**

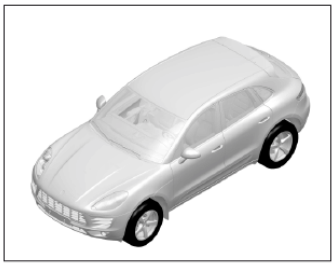

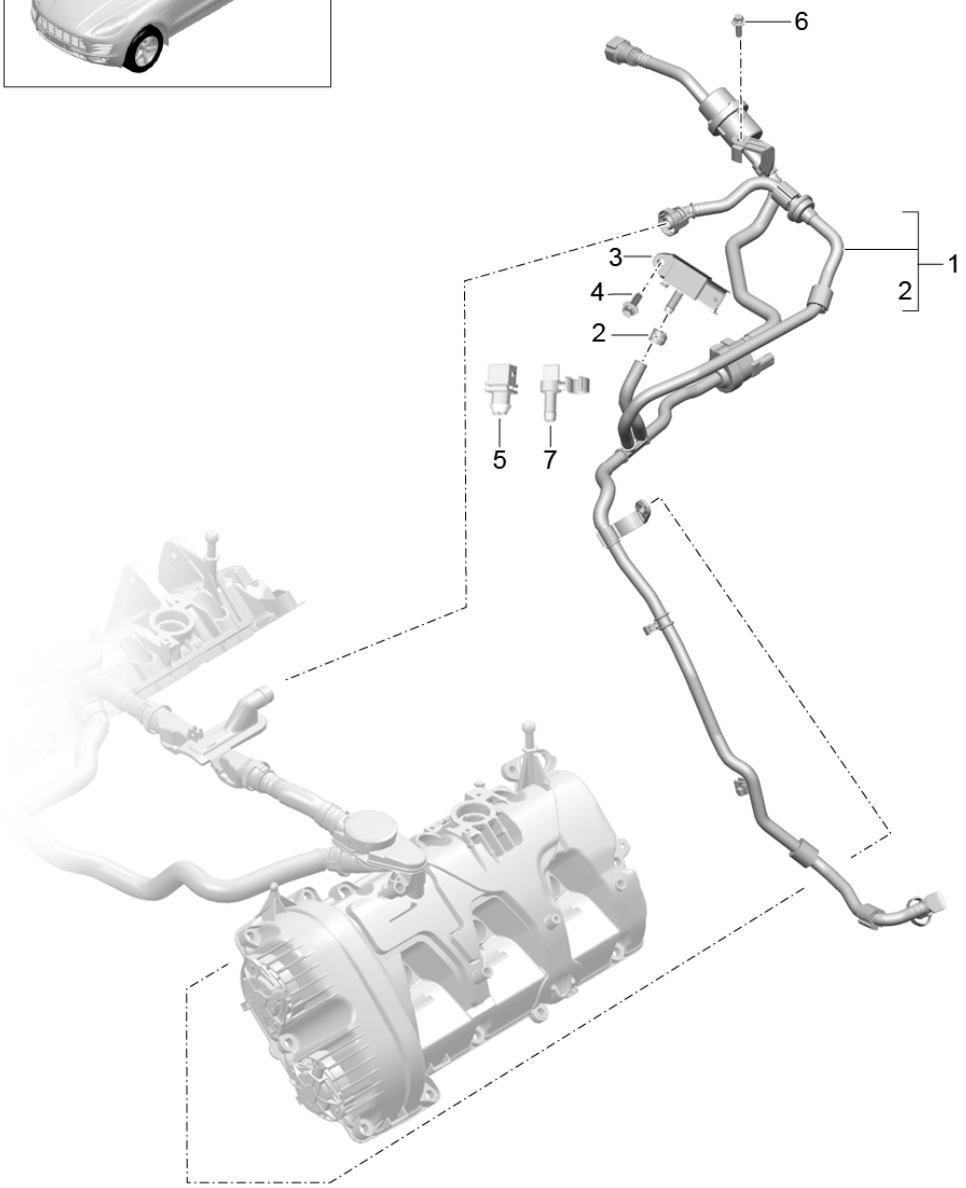

Model: 95B **Model life 2014>>**

Pos	Part Number	Description	Remark	Qty	Model
		Tank ventilation			MCT.LA/MA MDC.NA
1	946 110 020 33	Vent line Tank ventilation		1	
(1)	946 110 020 34	Vent line Tank ventilation		1	
(1)	946 110 020 35	Vent line Tank ventilation M >> CTM041822 M >> CTL015883		1	
2	999 512 596 09	Hose clamp A 13 X 12		1	
3	06H 906 051 G	Pressure sensor		1	
(3)	9A1 606 114 00	Pressure sensor		1	I7GB
4	900 385 019 01	Torx screw M 6 X 20		1	I7GB
5	7PP 971 918 A	Stopper Catch Connector Wiring harness		1	-I7GB
6	900 385 009 01	Torx screw BM 6 X 16		1	
7	946 110 220 00	Stopper Catch Vent line Pressure sensor		1	-I7GB

Illustration: 107-10

PORSCHE

Model: 95B **Model life 2014>>**

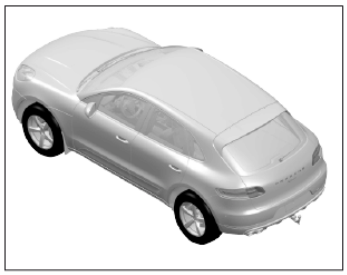

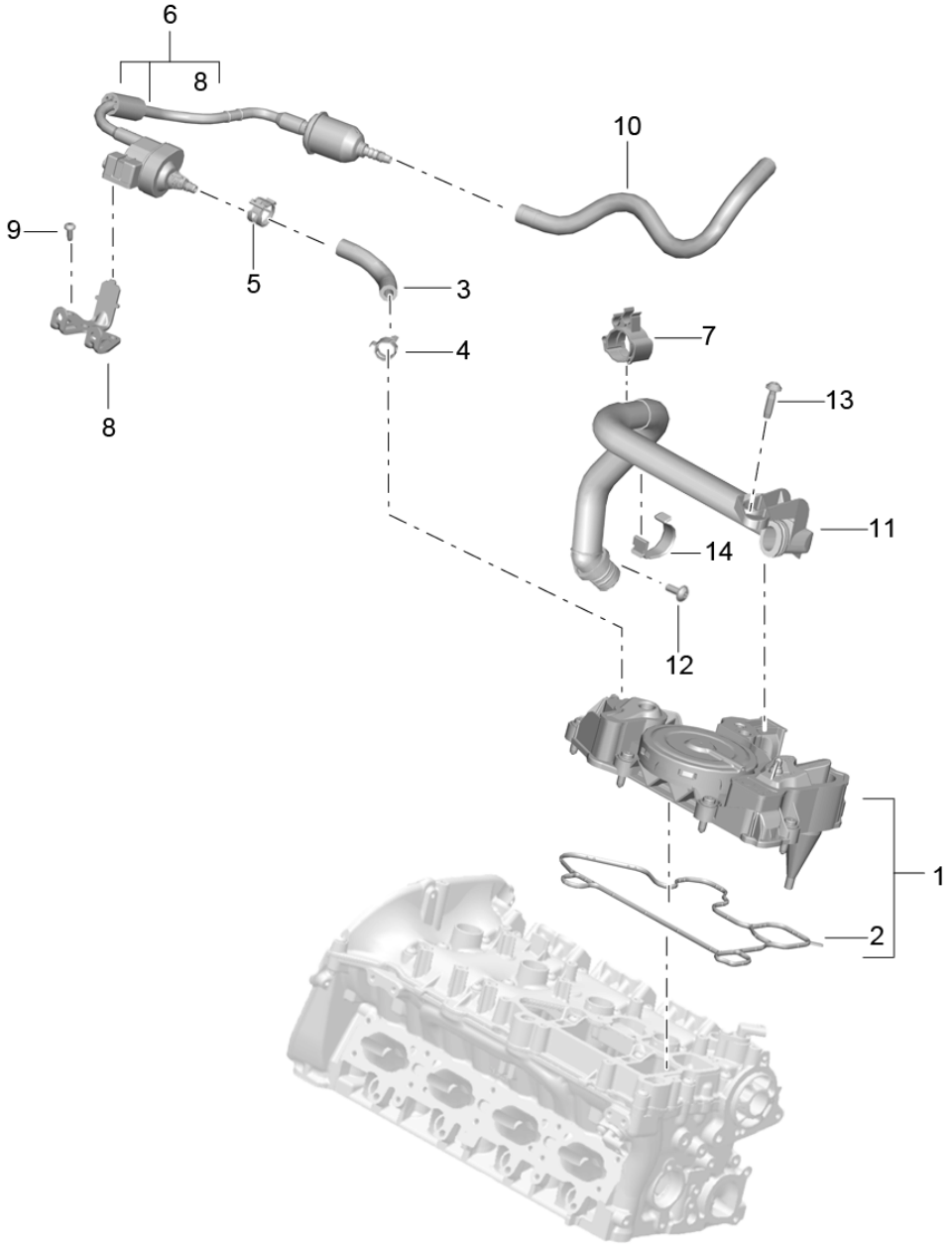

Illustration: 107-10

PORSCHE

Model: 95B **Model life 2014>>**

Pos	Part Number	Description	Remark	Qty	Model
		Oil separator			MCN.CC MCY.NA/NB/PA
		Bleeding Fuel tank Crankcase			
1	958 103 495 00	Oil separator		1	
2	958 103 484 00	Gasket		1	
3	958 133 514 00	Breather hose		1	
4	N 909 865 01	Hose clamp B 14,5 X 12		1	
5	N 907 702 01	Hose clamp B 17 X 12		1	
6	958 133 781 00	Vent line Valve Expansion tank		1	
7	958 133 689 00	Support Vent line		1	
8	958 133 519 00	Support Valve		1	
(8)	958 133 519 10	Support Valve		1	
9	N 106 549 02	Round head screw		2	
10		Breather hose See illustrations 2/01/40 POS.1		1	
11	958 103 213 00	Vent line Crankcase Bleeding		1	MCN.CC MCY.PA
(11)	958 103 213 10	Vent line Crankcase Bleeding		1	MCY.NA/NB
12	N 106 320 03	Oval-head screw M 6 X 16		1	MCN.CC MCY.PA
(12)	958 133 729 00	Union		1	MCY.NA/NB
(12)	N 102 549 01	Hose clamp B 14 X 7		1	MCY.NA/NB
13	N 106 112 01	Oval-head sheetmetal screw M 6 X 22		1	
14	958 201 250 00	Clip Vent line		1	

Illustration: 107-15

PORSCHE

Model: 95B **Model life 2014>>**

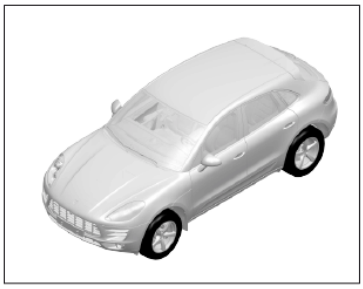

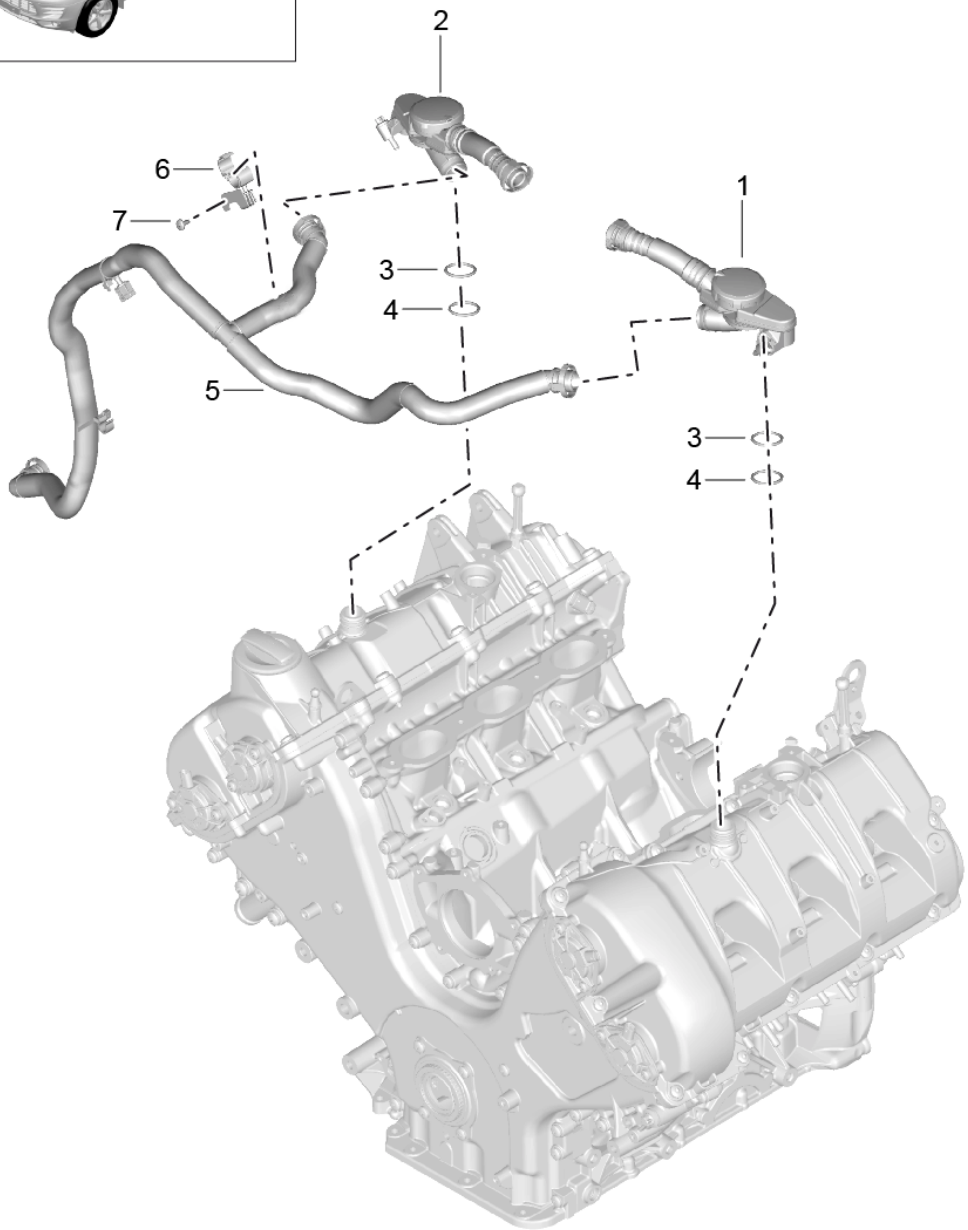

Illustration: 107-15

PORSCHE

Model: 95B **Model life 2014>>**

Pos	Part Number	Description	Remark	Qty	Model
		Crankcase			MCT.LA/MA MDC.NA
		Bleeding			
1	946 107 230 77	Check valve with Fastening part	/L	1	
2	946 107 229 77	Check valve with Fastening part	/R	1	
3	999 707 677 40	O-ring 22,5 X 2,5		2	
4	999 707 677 41	O-ring 22,5 X 2,5		2	
5	946 107 239 32	Vent line		1	
6	946 107 029 76	Support		1	
7	999 073 902 31	Oval-head screw Aluminium M 6 X 16		4	

Illustration: 107-25

PORSCHE

Model: 95B **Model life 2014>>**

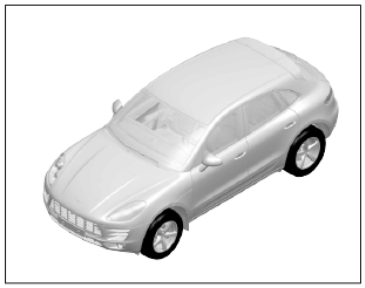

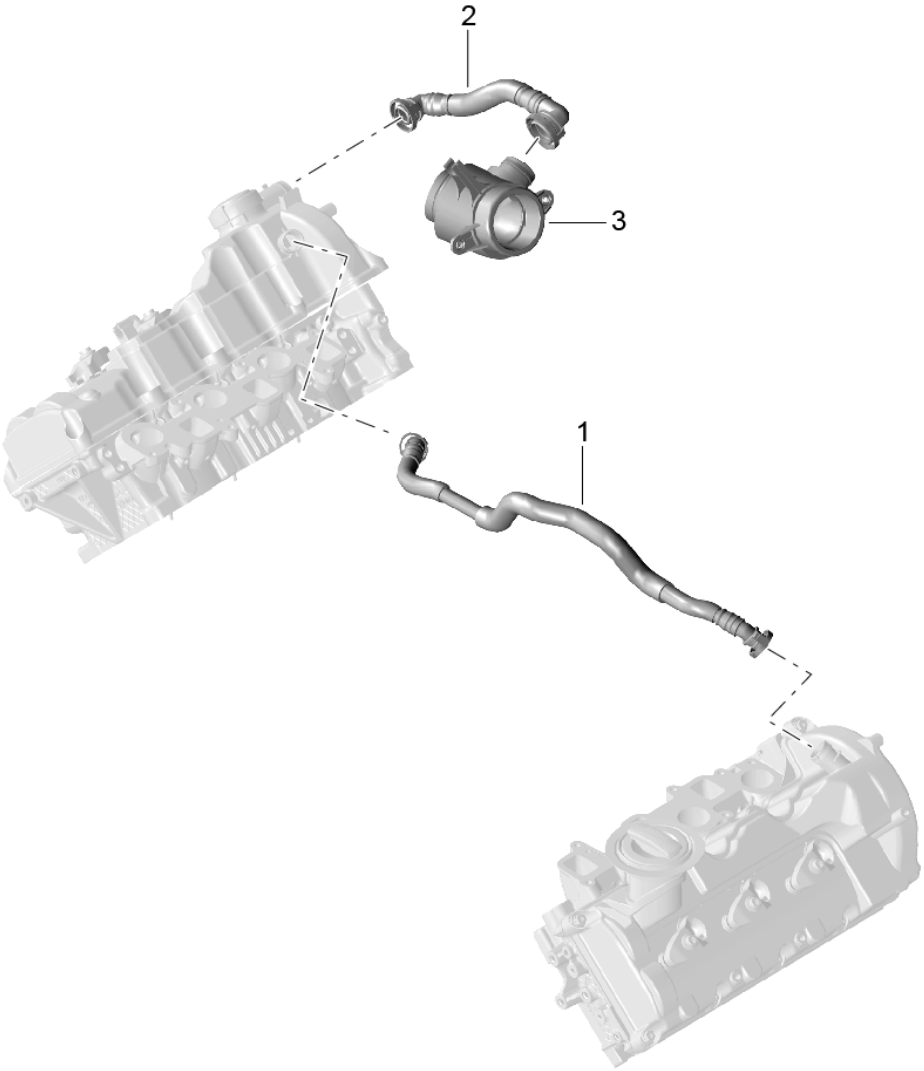

Model: 95B **Model life 2014>>**

Pos	Part Number	Description	Remark	Qty	Model
		Vent line			MCD.UD MCT.BA/BB/BC
		Crankcase			
1	958 107 209 00	Vent line		1	
2	059 103 221 AJ	Vent line		1	
3		Pulsation damper See illustrations 1/06/10 POS.13		1	

Illustration: 107-30

PORSCHE

Model: 95B **Model life 2014>>**

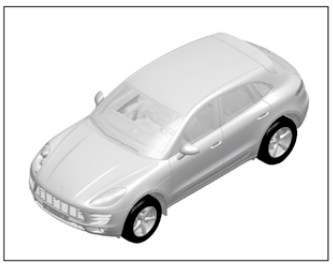

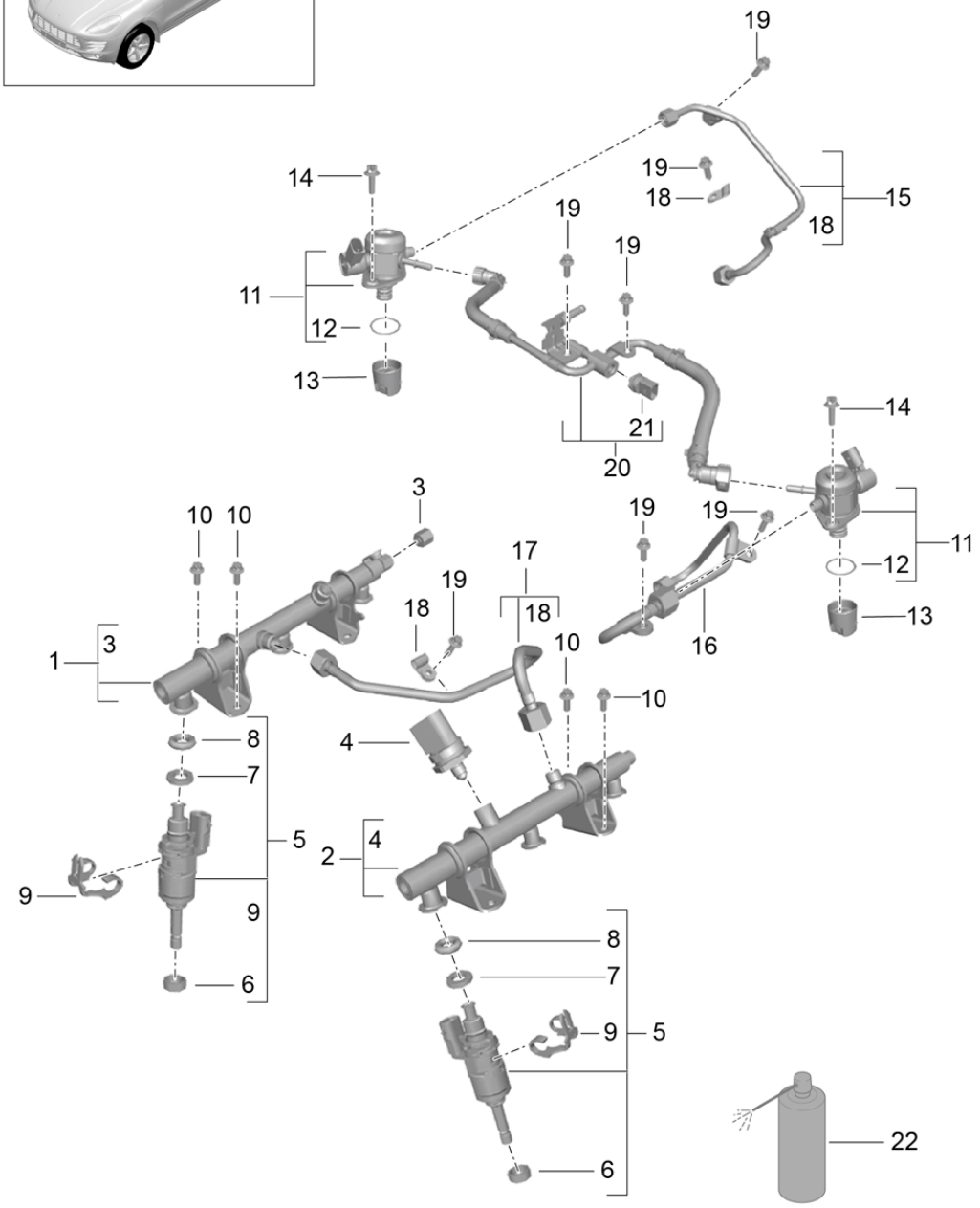

Model: 95B **Model life 2014>>**

Pos	Part Number	Description	Remark	Qty	Model
		Fuel collection pipe			MCT.LA/MA MDC.NA
		high-pressure injector high-pressure pump			
1	946 110 117 00	Fuel collection pipe Cyl. 1 - 3		1	
2	946 110 118 00	Fuel collection pipe Cyl. 4 - 6		1	
3	948 110 225 00	Stopper		1	
4	06J 906 051 F	Pressure sensor		1	
5	946 110 128 30	high-pressure injector	-15	6	
(5)	946 110 128 31	high-pressure injector	16	6	
(5)	946 110 128 32	high-pressure injector	17-	6	
6	946 110 428 60	Sealing ring	-15	6	
(6)	946 110 428 61	Sealing ring	16-	6	
7	946 110 328 60	Clamping ring		6	
(7)	946 110 328 30	Clamping ring		6	
(7)	946 110 328 31	Clamping ring		6	
8	999 701 187 40	O-ring 5,94 X 13 X 3,53	-15	6	
(8)	999 701 187 42	O-ring 5,94 X 13 X 3,53	16-	6	
9	946 110 228 60	Support		6	
10	900 385 009 01	Torx screw BM 6 X 16		8	
11	946 110 315 61	high-pressure pump		2	
12	999 701 048 40	O-ring 31 X 2		2	
13	06L 109 311	Cam follower		2	
14	900 385 019 01	Torx screw BM 6 X 20		4	
15	946 110 127 03	Fuel line Cyl. 1 - 3		1	
(15)	946 110 127 04	Fuel line Cyl. 1 - 3		1	
16	946 110 131 02	Fuel line Cyl. 4 - 6		1	
(16)	946 110 131 03	Fuel line Cyl. 4 - 6		1	
17	946 110 129 01	Fuel line		1	
(17)	946 110 129 02	Fuel line		1	
18	999 511 741 00	Clamp 8 X 15		2	
19	900 385 009 01	Torx screw BM 6 X 16		7	
20	946 110 235 01	Fuel line		1	
(20)	946 110 235 03	Fuel line	-15	1	
(20)	946 110 235 04	Fuel line	16-	1	
21	06H 906 051 G	Pressure sensor	-15	1	
(21)	06H 906 051 J	Pressure sensor	16-	1	
22	000 043 209 35	Grease MICROGLEIT DF 977 S Spraying can 400 ML for Fuel line Use		1	

Illustration: 107-40

PORSCHE

Model: 95B **Model life 2014>>**

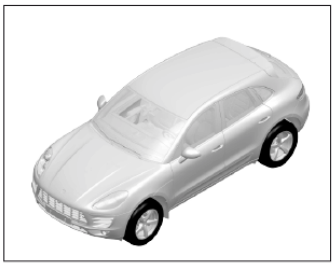

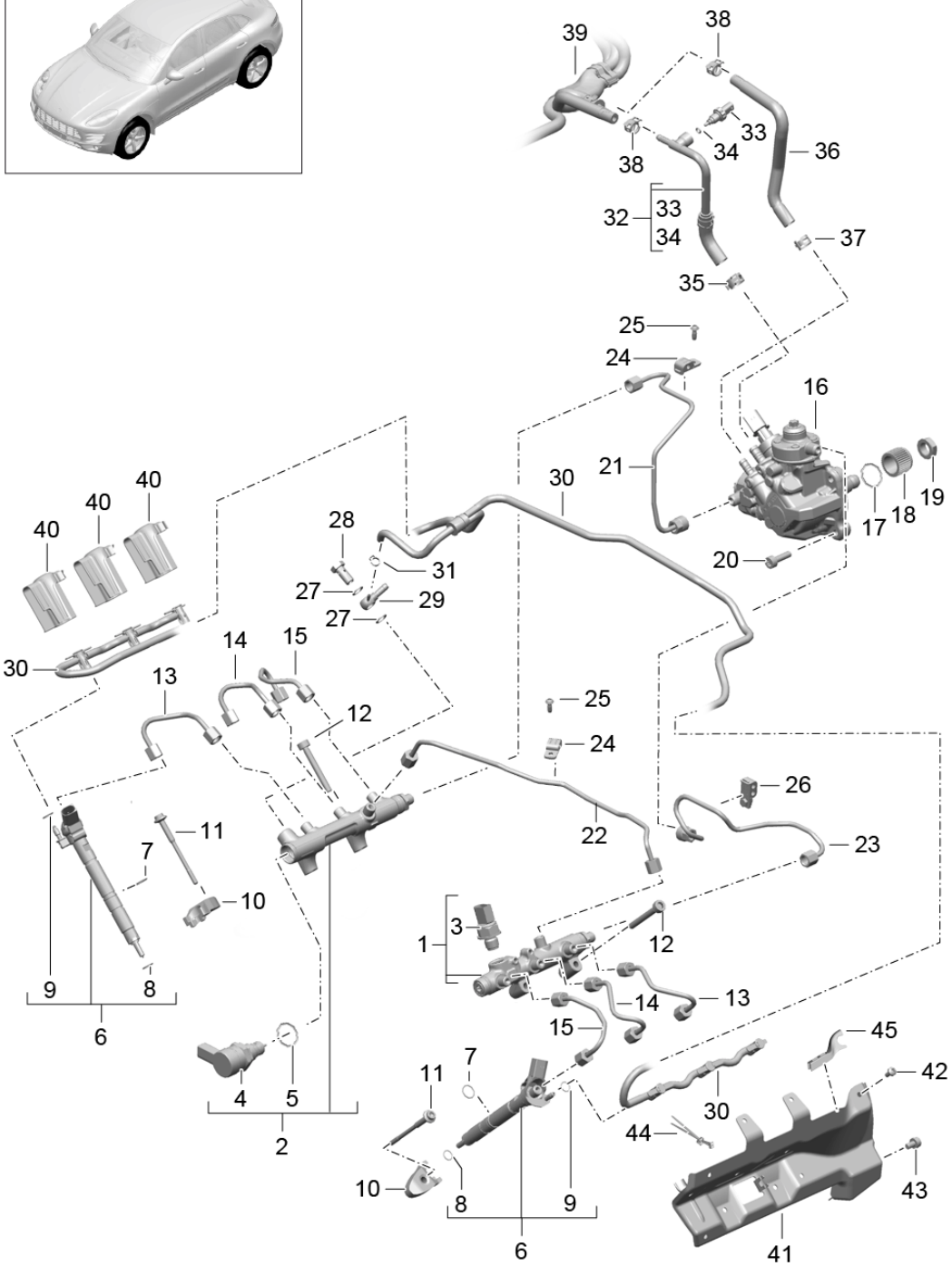

Model: 95B **Model life 2014>>**

Pos	Part Number	Description	Remark	Qty	Model
		Fuel collection pipe			MCD.UD MCT.BA/BB/BC
		high-pressure injector high-pressure pump			
1	958 110 115 30	Fuel collection pipe Left		1	MCT.BA/BB/BC
(1)	958 110 115 50	Fuel collection pipe Left		1	MCD.UD
2	958 110 116 31	Fuel collection pipe Right		1	MCT.BA/BB/BC
(2)	958 110 116 50	Fuel collection pipe Right		1	MCD.UD
3	958 606 230 30	Pressure sensor		1	
4	958 606 240 10	Pressure regulator		1	
5	955 110 319 00	O-ring		1	
6	958 110 128 40	high-pressure injector Complete		6	MCT.BA/BB/BC
(6)	958 110 128 50	high-pressure injector Complete		6	MCD.UD
7	WHT 000 884	O-ring 16,2 X 1,5		6	
8	958 110 519 00	Sealing ring high-pressure injector		6	
9	955 110 619 00	O-ring 2,8 X 1,5		6	
10	958 110 216 00	Tensioning plate		6	
11	WHT 004 923 B	Pan-head screw M 6 X 93 X 25		6	
12	N 910 455 02	Pan-head screw M 8 X 65		4	
13	958 110 241 00	Fuel line		2	MCT.BA/BB/BC
(13)	958 110 241 50	Fuel line		2	MCD.UD
14	958 110 241 10	Fuel line		2	MCT.BA/BB/BC
(14)	958 110 241 60	Fuel line		2	MCD.UD
15	958 110 241 20	Fuel line		2	MCT.BA/BB/BC
(15)	958 110 241 70	Fuel line		2	MCD.UD
16	958 110 315 01	high-pressure pump		1	MCT.BA/BB/BC
(16)	958 110 315 30	high-pressure pump		1	MCD.UD
17	958 110 615 00	Sealing ring		1	
18	958 110 541 10	Flange Sprocket Only together with Sprocket 958.105.222.11 059.109.569.S		1	MCT.BA/BB/BC
(18)	958 110 541 00	Flange Sprocket Only together with Sprocket 958.105.222.00 059.109.569.F		1	MCD.UD
(18)	958 110 541 10	Flange Sprocket Only together with Sprocket 958.105.222.10 059.109.569.L		1	MCD.UD
(18)		Flange Sprocket Only together with Sprocket 958.105.222.11 059.109.569.S		1	MCD.UD

Model: 95B **Model life 2014>>**

Pos	Part Number	Description	Remark	Qty	Model
19	WHT 002 244	Hexagon nut M 18 X 1,5		1	
20	N 911 873 01	Pan-head screw M 8 X 30		3	
21	958 110 125 20	Fuel line		1	MCT.BA/BB/BC
(21)	958 110 125 40	Fuel line		1	MCD.UD
22	958 110 314 10	Fuel line		1	MCT.BA/BB/BC
(22)	958 110 314 30	Fuel line		1	MCD.UD
(23)	958 110 126 10	Fuel line		1	MCT.BA/BB/BC
(23)	958 110 126 30	Fuel line		1	MCD.UD
24	958 110 410 00	Support Fuel line		2	MCT.BA/BB/BC
(24)	958 110 410 10	Support Fuel line		2	MCD.UD
25	N 107 214 01	Oval-head screw 6 X 16		2	
26	958 110 411 00	Support Fuel line		1	MCT.BA/BB/BC
(26)	955 110 411 00	Support Fuel line		1	MCD.UD
27	N 013 813 3	Sealing ring A 12 X 17		2	
28	N 021 071 7	Banjo bolt 8		1	
29	958 110 602 00	Ring fitting		1	
30	958 110 218 11	Fuel hose Complete		1	
(30)	958 110 218 12	Fuel hose Complete		1	
31	N 102 313 01	Hose clamp 10,5 X 5 X 0,5		1	
32	958 110 299 02	Fuel line Supply		1	
33	955 606 221 00	Temperature sensor		1	
34	WHT 002 287 C	O-ring 5,6 X 2		1	
35	999 512 652 09	Hose clamp B 19 X 12		1	
-	958 606 341 07	Cable guide Wiring harness		1	
-	N 107 214 01	Oval-head screw TP 6 X 16		2	
36	958 110 297 10	Fuel line Return line		1	
37	N 907 702 01	Hose clamp B 17 X 12 Return line		1	
38	N 909 865 01	Hose clamp B 14,5 X 12		2	
39		Fuel line Complete See illustrations 2/01/35 POS.1		1	
40	958 110 685 01	Protection cap high-pressure injector Cylinder 1/2/3		3	MCT.BA/BB/BC
(40)	95B 130 396	Cover high-pressure injector Cylinder 1/2/3		1	MCT.BA/BB/BC
41	95B 130 395 A	Cover		1	

Model: 95B **Model life 2014>>**

Pos	Part Number	Description	Remark	Qty	Model
		high-pressure injector Cylinder 4/5/6			
(41)	95B 130 395 B	Cover high-pressure injector Cylinder 4/5/6		1	
42	N 103 352 06	Round head screw M 6 X 12		3	
43	N 910 522 01	Pan-head screw M 8 X 12		1	
44	8E0 971 850 F	Clip		2	
45	95B 971 865 F	Edge protection		1	

Illustration: 107-50

PORSCHE

Model: 95B **Model life 2014>>**

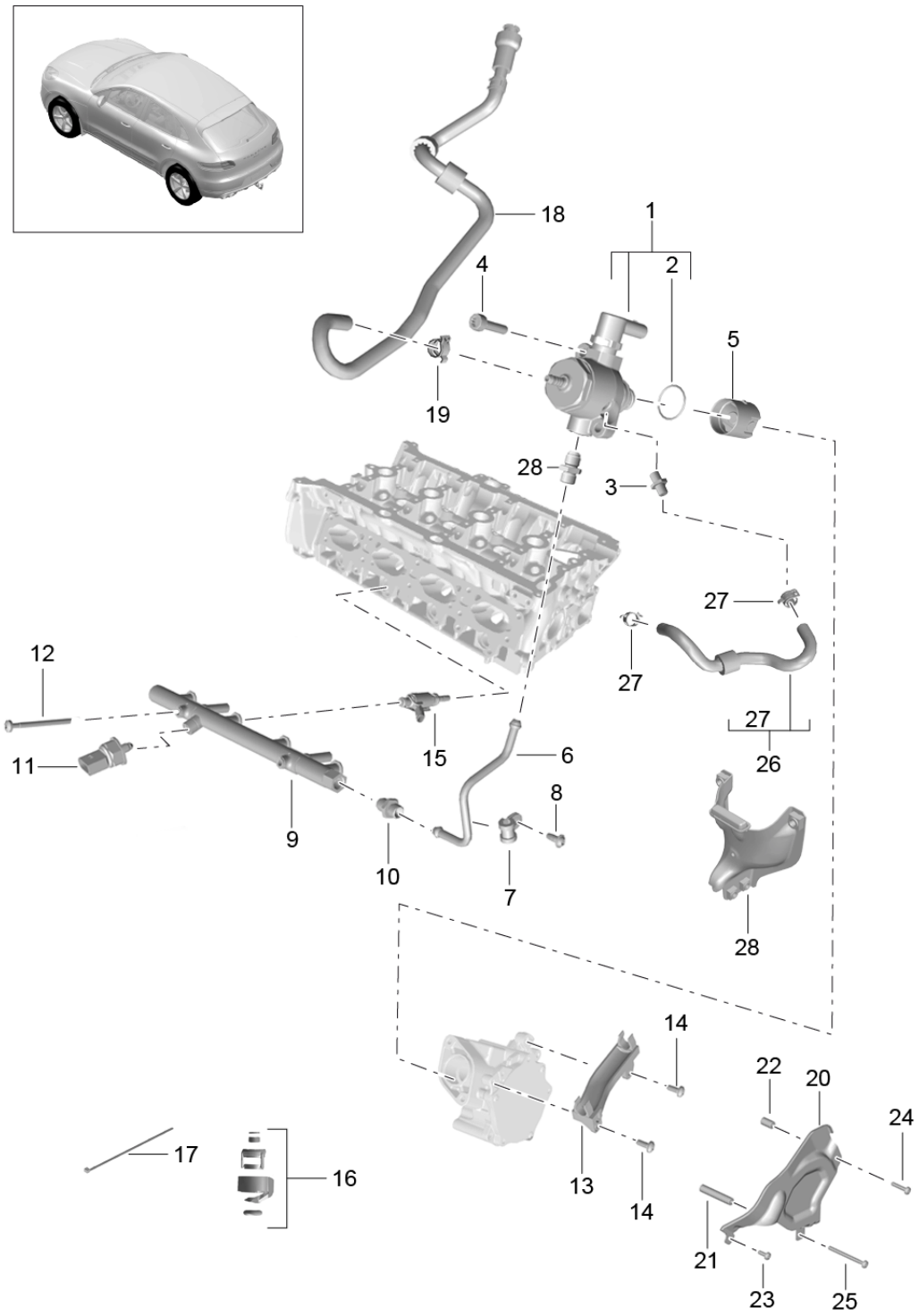

Model: 95B **Model life 2014>>**

Pos	Part Number	Description	Remark	Qty	Model
		Fuel collection pipe			MCN.CC MCY.PA
		high-pressure injector high-pressure pump			
1	958 127 025 00	high-pressure pump		1	
2	WHT 005 184	O-ring 31 X 2		1	
3	958 127 213 00	Connecting piece		1	
4	N 911 287 01	Pan-head screw M 8 X 32		2	
5	06L 109 311	Cam follower		1	
6	958 127 501 00	Fuel line		1	
(6)	958 127 501 01	Fuel line		1	
7	N 020 609 8	Retaining clip		1	
8	N 909 252 02	Round head screw M 6 X 16		1	
9	958 133 317 00	Fuel collection pipe Cylinders 1 - 4		1	
10	958 127 065 00	Connecting piece		1	
11	06J 906 051 F	Pressure sensor		1	
12	N 911 310 01	Round head screw M 6 X 80		2	
13	958 133 689 10	Support Fuel line		1	MCN.CC
(13)	958 133 689 30	Support Fuel line		1	MCY.PA
14	N 910 967 03	Torx screw M 6 X 16		2	
15	958 906 036 00	high-pressure injector		4	
16	958 998 907 00	Repair kit high-pressure injector		X	
(16)	958 998 907 01	Repair kit high-pressure injector		X	
17	N 909 377 01	Tie-wrap		X	
18		Fuel line See illustrations 2/01/40 POS.3		1	
19		Hose clamp See illustrations 2/01/40 POS.4		1	
20	95B 133 833	Heat shield Vacuum pump		1	
21	95B 131 135	Sleeve Long		1	
22	95B 131 135 A	Sleeve Short		1	
23	N 910 968 01	Lens-head screw M 6 X 20		1	
24	N 910 972 01	Round head screw M 6 X 35		1	
25	N 911 310 01	Round head screw M 6 X 80		1	
26	958 133 986 00	Fuel hose		1	
27	N 909 865 01	Hose clamp B 14,5 X 12		2	
28	958 127 065 10	Connecting piece		1	

Illustration: 107-55

PORSCHE

Model: 95B **Model life 2014>>**

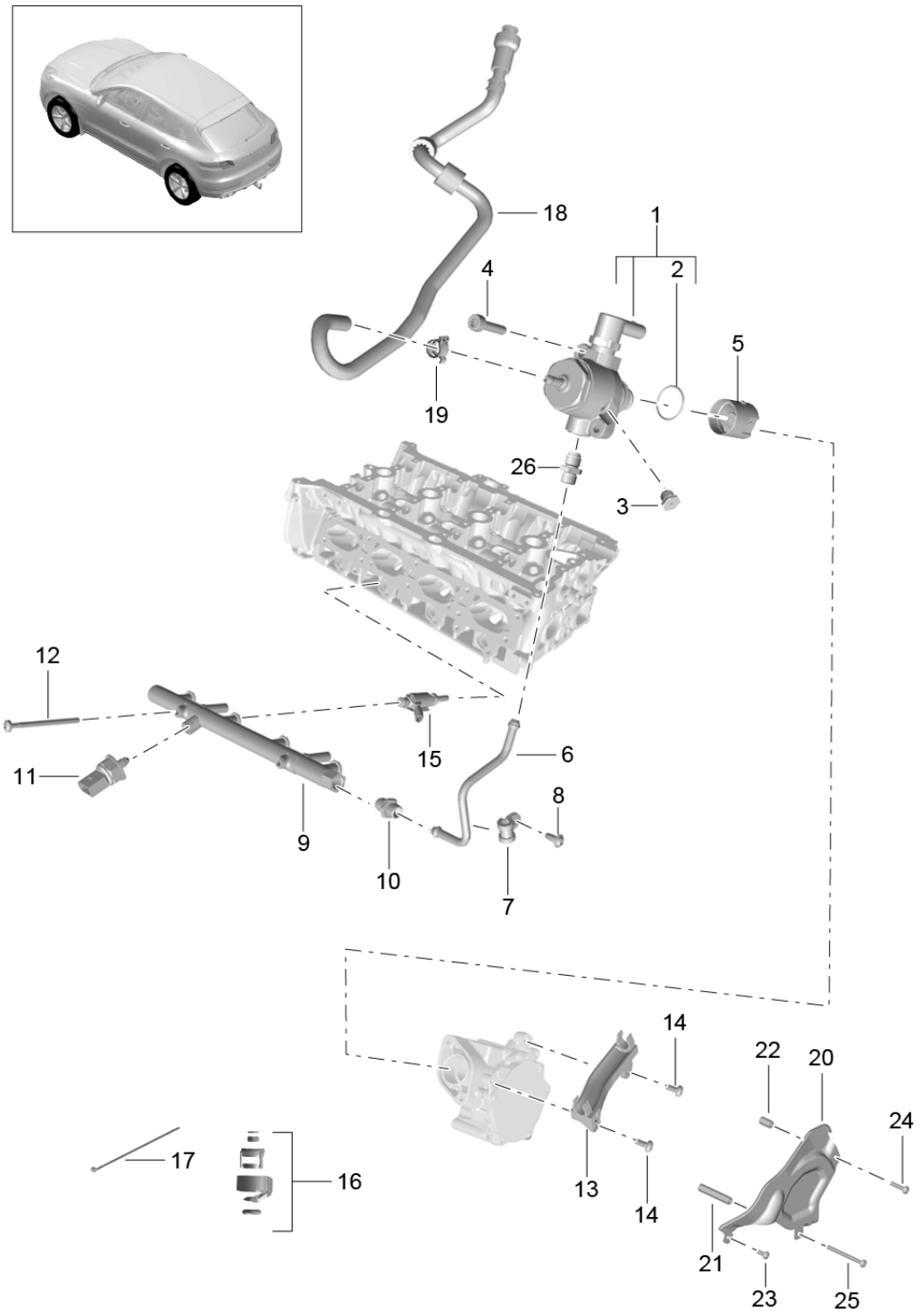

Model: 95B **Model life 2014>>**

Pos	Part Number	Description	Remark	Qty	Model
		Fuel collection pipe			MCY.NA/NB
		high-pressure injector			
		high-pressure pump			
1	958 127 025 00	high-pressure pump		1	
(1)	958 127 025 30	high-pressure pump		1	
2	WHT 005 184	O-ring		1	
3	958 127 535 00	Screw plug		1	
4	N 911 287 01	Pan-head screw		2	
		M 8 X 32			
5	06L 109 311	Cam follower		1	
6	958 127 501 00	Fuel line		1	
(6)	958 127 501 01	Fuel line		1	
7	N 020 609 8	Retaining clip		1	
8	N 909 252 02	Round head screw		1	
		M 6 X 16			
9	958 133 317 00	Fuel collection pipe		1	
		Cylinders 1 - 4			
10	958 127 065 00	Connecting piece		1	
11	06J 906 051 F	Pressure sensor		1	
12	N 911 310 01	Round head screw		2	
		M 6 X 80			
13	958 133 689 10	Support		1	MCY.NA
		Fuel line			
(13)	958 133 689 30	Support		1	MCY.NB
		Fuel line			
14	N 910 967 03	Torx screw		2	
		M 6 X 16			
15	958 906 036 00	high-pressure injector		4	
16	958 998 907 00	Repair kit		X	
		high-pressure injector			
(16)	958 998 907 01	Repair kit		X	
		high-pressure injector			
17	N 909 377 01	Tie-wrap		X	
18		Fuel line		1	
		See illustrations			
		2/01/40			
		POS.3			
19		Hose clamp		1	
		See illustrations			
		2/01/40			
		POS.4			
20	95B 133 833	Heat shield		1	
		high-pressure pump			
21	95B 131 135	Sleeve		1	
		Long			
22	95B 131 135 A	Sleeve		1	
		Short			
23	N 910 968 01	Lens-head screw		1	
		M 6 X 20			
24	N 910 972 01	Round head screw		1	
		M 6 X 35			
25	N 911 310 01	Round head screw		1	
		M 6 X 80			
26	958 127 065 10	Connecting piece		1	

Illustration: 107-60

PORSCHE

Model: 95B **Model life 2014>>**

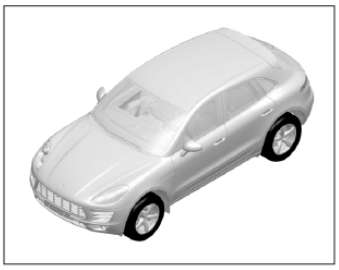

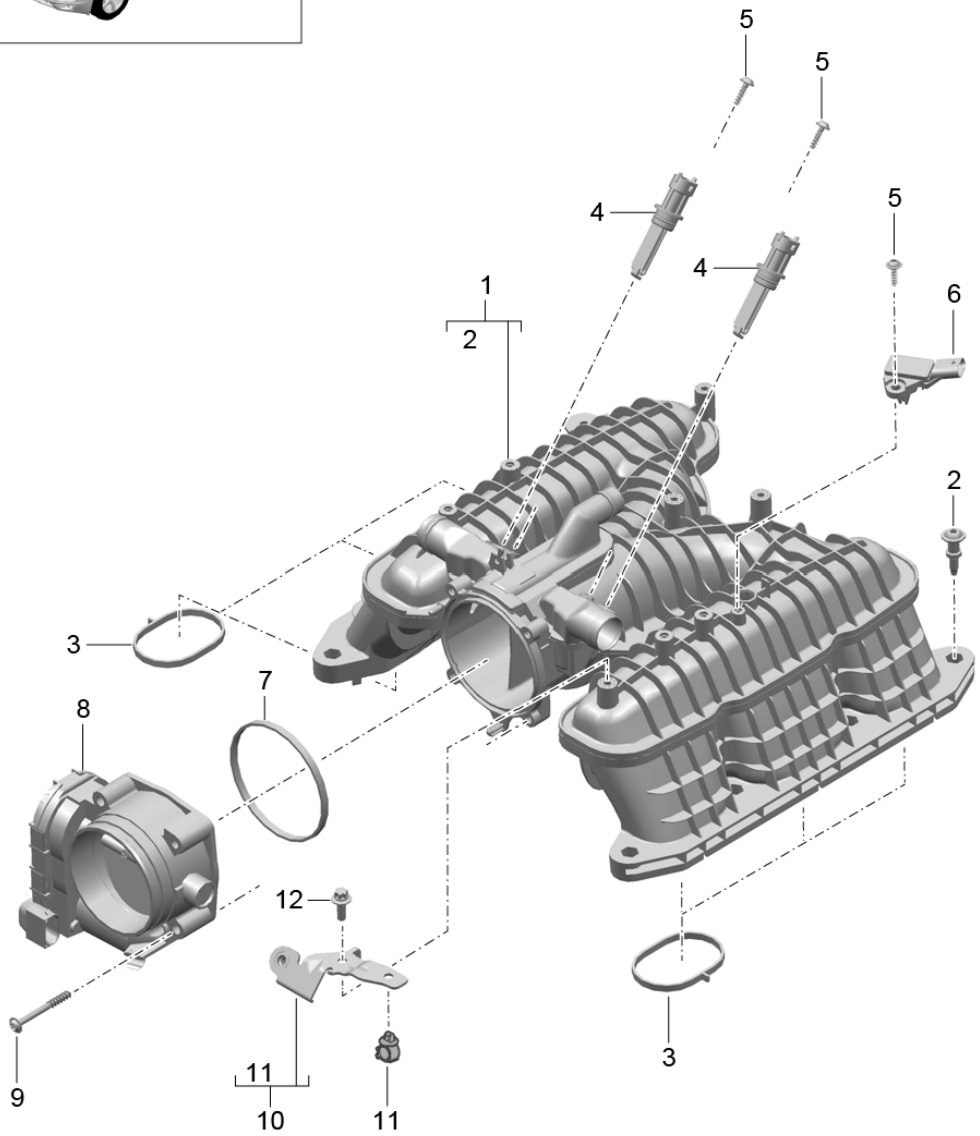

Illustration: 107-60

PORSCHE

Model: 95B **Model life 2014>>**

Pos	Part Number	Description	Remark	Qty	Model
		Intake distributor			MCT.LA/MA MDC.NA
		Throttle body			
1	946 110 016 63	Intake distributor M >> CTM040461 M >> CTL015490		1	
1	946 110 016 64	Intake distributor M CTM040462 >> M CTL015491 >>		1	MDC.NA
2	946 110 412 60	Fastening part		8	
3	946 110 146 60	Gasket		6	
4	946 605 139 00	T-socket Heated		2	
5	999 919 006 01	Oval-head screw 5,0 X 16,0		3	
6	06E 906 051 Q	Pressure sensor		1	
7	948 110 144 02	Gasket		1	
8	997 605 115 01	Throttle body		1	
9	999 919 005 01	Oval-head screw BM 6 X 50		4	
10	946 110 027 76	Support		1	
11	N 103 203 02	Hose holder		1	
12	900 385 009 01	Torx screw BM 6 X 16		1	

Illustration: 107-66

PORSCHE

Model: 95B **Model life 2014>>**

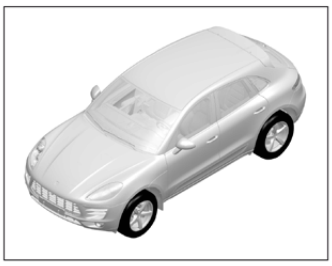

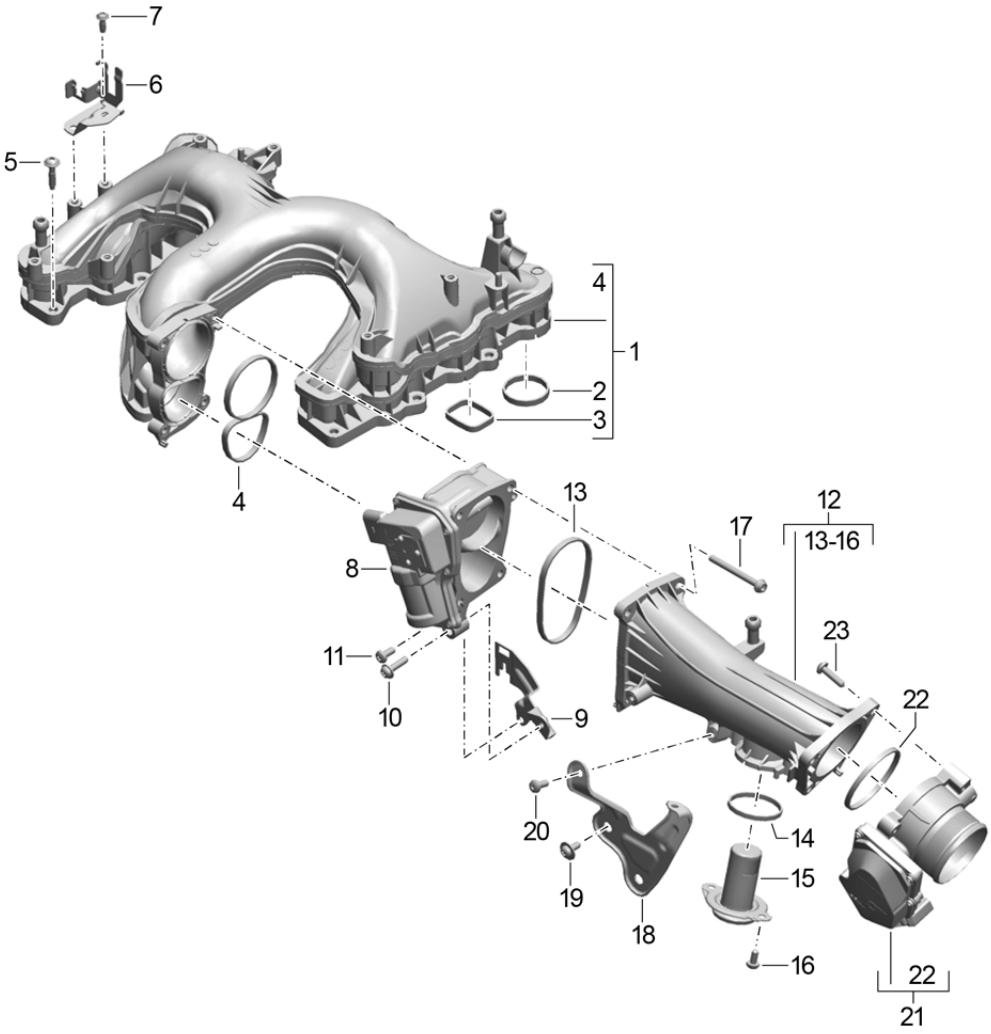

Illustration: 107-66

PORSCHE

Model: 95B **Model life 2014>>**

Pos	Part Number	Description	Remark	Qty	Model
		Intake manifold			MCD.UD MCT.BA/BB/BC
		Throttle body Air guide housing			
1	958 110 016 00	Intake manifold		1	
2	958 110 147 10	Gasket		6	
3	958 110 148 00	Gasket		6	
4	958 110 144 00	Gasket		1	
5	WHT 004 917	Outer hexagon round screw M 6 X 28		12	
6	958 606 311 10	Support		1	
7	N 107 214 01	Oval-head screw 6 X 16		2	
8	958 605 115 00	Throttle body		1	
9	958 110 560 00	Support		1	
10	N 910 541 01	Oval-head screw M 6 X 25		1	
11	N 107 214 01	Oval-head screw 6 X 16		2	
12	958 110 065 00	Air guide housing		1	
13	958 110 215 20	Gasket		1	
14	958 111 149 00	Gasket		1	
15	958 111 153 30	Connecting tube		1	
16	N 104 056 04	Oval-head screw M 6 X 14		2	
17	N 104 239 03	Pan-head screw AM 6 X 60		4	
18	958 110 661 00	Support		1	
19	N 104 114 02	Outer hexagon round screw M 6 X 16		2	
20	N 104 056 04	Oval-head screw M 6 X 14		2	
21	958 605 115 11	Throttle body		1	
22	955 110 144 00	Gasket		1	
23	N 911 482 01	Round head screw M 6 X 25		3	

Illustration: 107-67

PORSCHE

Model: 95B **Model life 2014>>**

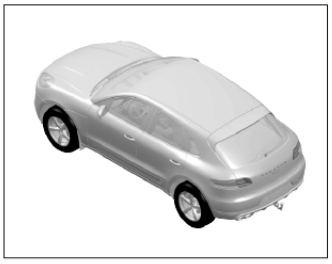

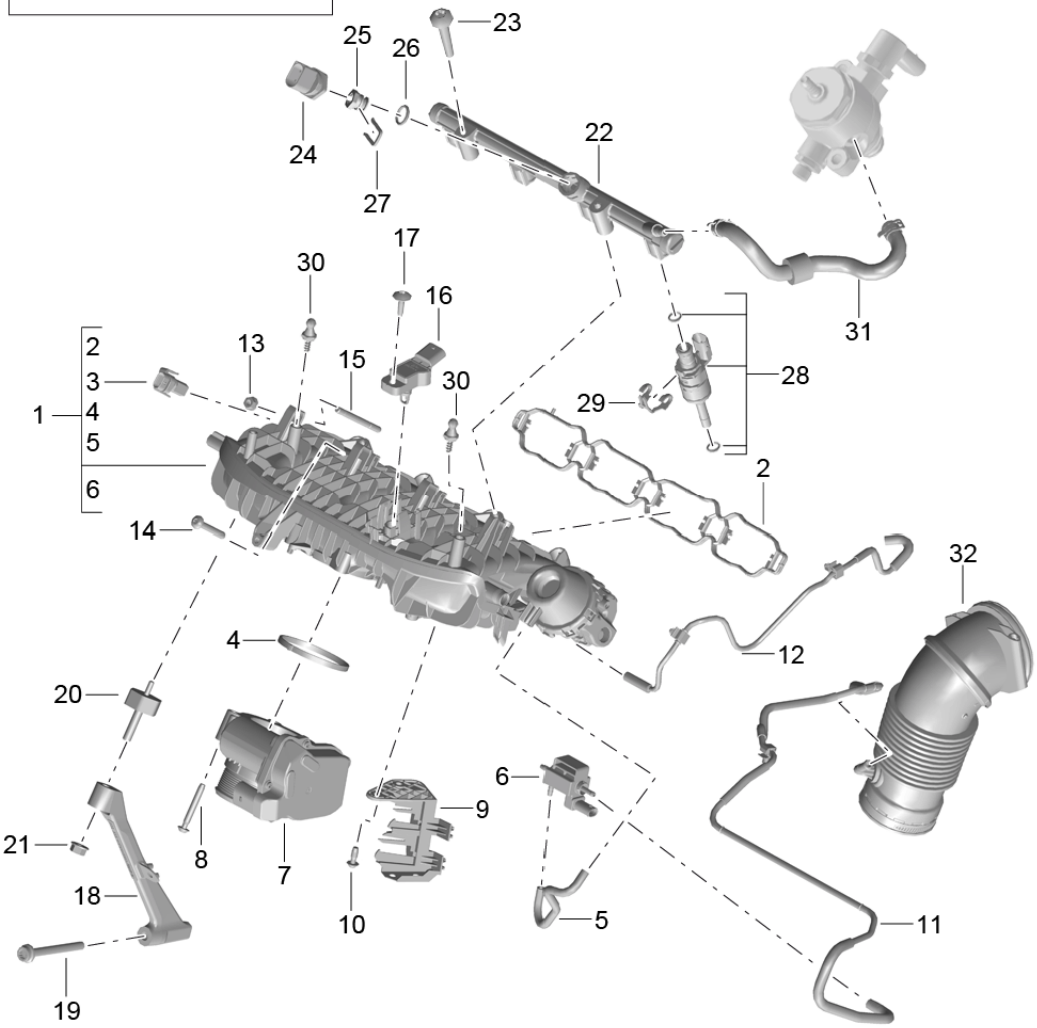

Model: 95B **Model life 2014>>**

Pos	Part Number	Description	Remark	Qty	Model
		Intake manifold			MCN.CC MCY.PA
		Throttle body Air guide housing			
1	958 133 201 00	Intake manifold		1	MCN.CC MCY.PA
2	958 129 717 00	Gasket		1	
3	958 907 386 00	Sensor		1	
4	958 133 073 00	Gasket		1	
5	958 133 595 00	Hose		1	
6	958 906 283 00	Change-over valve		1	MCN.CC MCY.PA
7	958 133 062 00	Throttle body		1	
(7)	958 133 062 10	Throttle body		1	
8	N 106 261 01	Screw M 6 X 45		4	
9	958 971 497 00	Mounting Knock sensor		1	
10	N 909 252 02	Round head screw M 6 X 16		2	
11	958 133 583 00	Connecting hose		1	
12	958 132 241 00	Connecting hose		1	
(12)	958 132 241 10	Connecting hose		1	
13	N 015 082 10	Hexagon nut M 6		2	
14	N 910 973 01	Torx screw M 6 X 45		8	
15	N 107 702 01	Stud M 6 X 40		2	
16	958 906 051 00	Pressure sensor		1	
17	N 907 321 03	Oval-head screw M 4 X 16		1	
18	958 129 723 00	Strut Intake manifold		1	
19	N 911 703 01	Multiple-tooth screw M 8 X 70		1	
20	958 121 273 00	Bearing		1	
21	N 106 092 02	Nut M 8		1	
22	958 133 681 00	Fuel collection pipe Cylinders 1 - 4 Only together with 95812781300 WHT005568 M >> CNC133508		1	MCN.CC
(22)	958 133 681 10	Fuel collection pipe Cylinders 1 - 4 Only together with 95812781310 N 91056801 M CNC133509 >>		1	MCN.CC MCY.PA
23	N 105 821 02	Outer hexagon round screw M 6 X 40		2	MCN.CC MCY.PA
24	06H 906 051 G	Pressure sensor		1	MCN.CC
(24)	06H 906 051 J	Pressure sensor		1	MCN.CC MCY.PA
25	958 127 813 00	Adapter Only together with Fuel collection pipe 95813368100		1	MCN.CC
(25)	958 127 813 10	Adapter		1	MCN.CC

Model: 95B **Model life 2014>>**

Pos	Part Number	Description	Remark	Qty	Model
					MCY.PA
		Only together with Fuel collection pipe 95813368110			
26	WHT 005 568	O-ring 11 X 3,1 Only together with Fuel collection pipe 95813368100		1	MCN.CC
(26)	N 910 568 01	O-ring 11 X 3,1 Only together with Fuel collection pipe 95813368110		1	MCN.CC MCY.PA
27	958 133 047 00	Retaining clip		1	MCN.CC MCY.PA
28	958 906 031 00	Injector valve		4	MCN.CC MCY.PA
29	958 903 037 00	Retaining clip		4	MCN.CC MCY.PA
30	WHT 005 593	Ball pin M 10 X 13,7		2	
31		Fuel hose See illustrations 1/07/50 POS.26		1	
32		Pressure pipe See illustrations 1/06/20 POS.5		1	

Illustration: 107-68

PORSCHE

Model: 95B **Model life 2014>>**

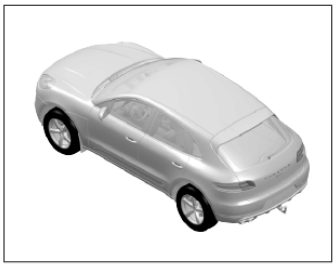

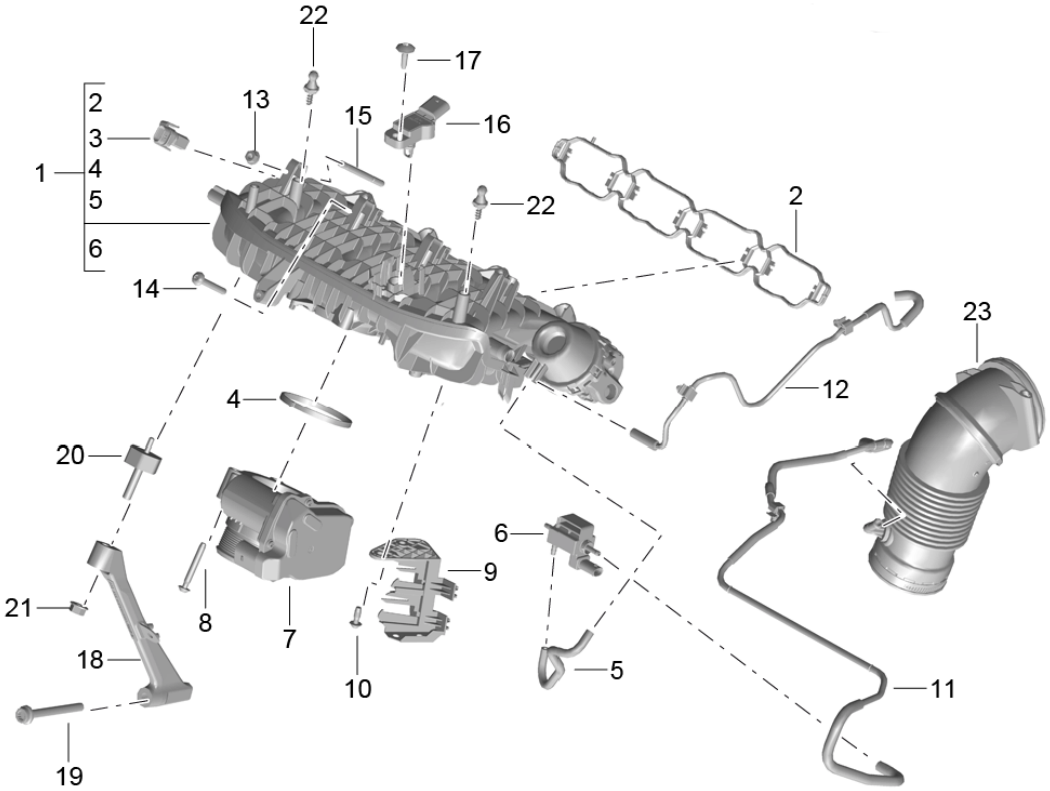

Illustration: 107-68

PORSCHE

Model: 95B **Model life 2014>>**

Pos	Part Number	Description	Remark	Qty	Model
		Intake manifold			MCY.NA/NB
		Throttle body			
		Air guide housing			
1	958 133 201 10	Intake manifold		1	MCY.NA/NB
2	958 129 717 00	Gasket		1	
3	958 907 386 00	Sensor		1	
4	958 133 073 00	Gasket		1	
5	958 133 595 00	Hose		1	
6	958 906 283 10	Change-over valve		1	MCY.NA/NB
7	958 133 062 00	Throttle body		1	
(7)	958 133 062 10	Throttle body		1	
8	N 106 261 01	Screw		4	
		M 6 X 45			
9	958 971 497 00	Mounting		1	
		Knock sensor			
10	N 909 252 02	Round head screw		2	
		M 6 X 16			
11	958 133 583 00	Connecting hose		1	
12	958 132 241 00	Connecting hose		1	
(12)	958 132 241 10	Connecting hose		1	
13	N 015 082 10	Hexagon nut		2	
		M 6			
14	N 910 973 01	Torx screw		8	
		M 6 X 45			
15	N 107 702 01	Stud		2	
		M 6 X 40			
16	958 906 051 00	Pressure sensor		1	
17	N 907 321 03	Oval-head screw		1	
		M 4 X 16			
18	958 129 723 00	Strut		1	
		Intake manifold			
19	N 911 703 01	Multiple-tooth screw		1	
		M 8 X 70			
20	958 121 273 00	Bearing		1	
21	N 106 092 02	Nut		1	
		M 8			
22	WHT 005 593	Ball pin		2	
		M 6 X 13			
23		Pressure pipe		1	
		See illustrations			
		1/06/20			
		POS.5			

Illustration: 107-70

PORSCHE

Model: 95B **Model life 2014>>**

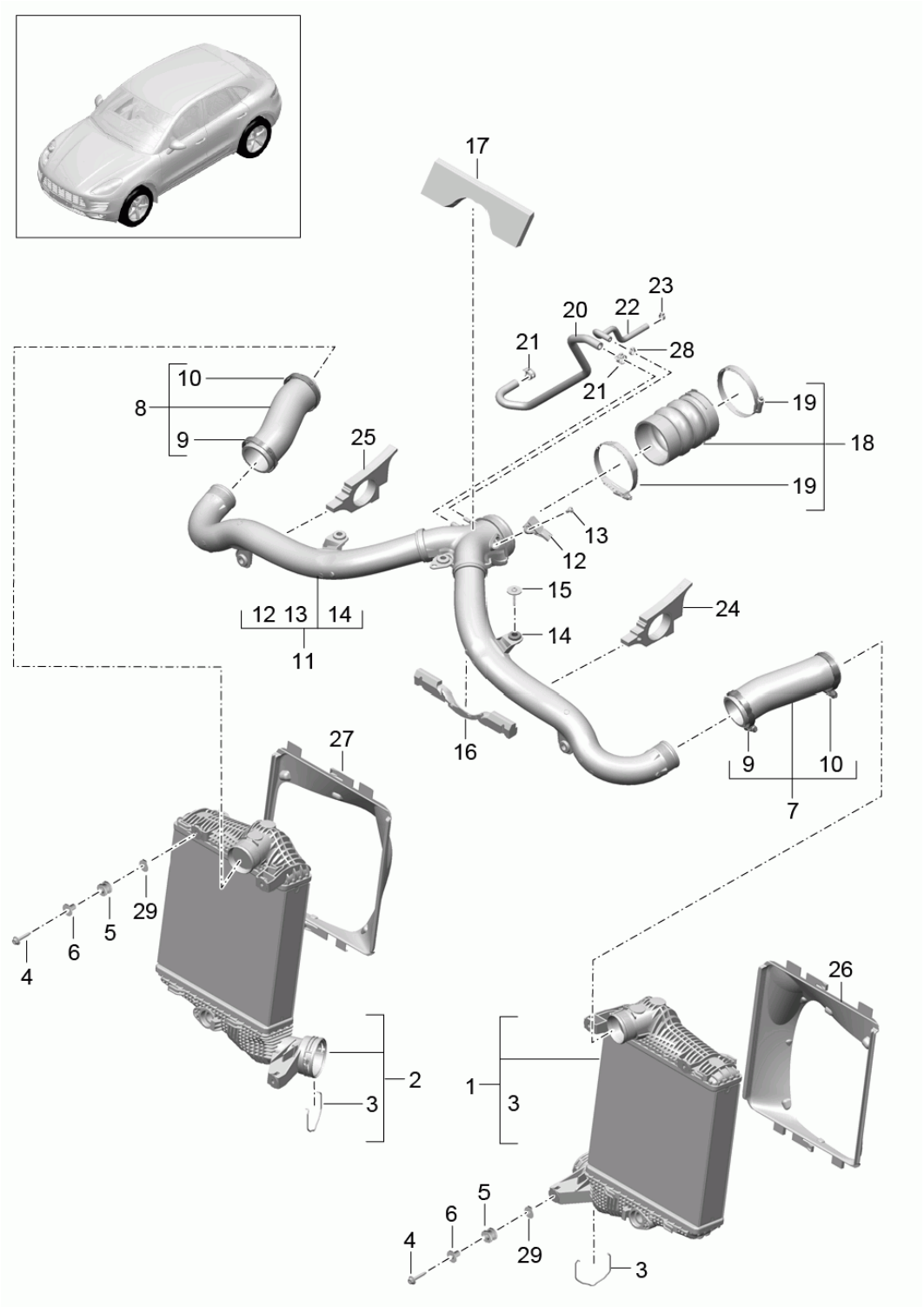

Illustration: 107-70

Model: 95B **Model life 2014>>**

Pos	Part Number	Description	Remark	Qty	Model
		Charge air cooler			MCT.LA/MA MDC.NA
		Pressure pipe			
1	95B 145 803 A	Charge air cooler	/L	1	
2	95B 145 804 A	Charge air cooler	/R	1	
3	955 110 513 10	Retainer spring		2	
4	N 107 857 01	Hexagon-head bolt M 6 X 35		6	
5	95B 129 669	Grommet		6	
6	95B 129 734	Spacer		6	
7	95B 145 367 A	Pressure hose Left	/L	1	
8	95B 145 368 A	Pressure hose Right	/R	1	
9	N 107 350 01	Hose clamp 50-70 X 12		2	
10	N 107 357 01	Hose clamp 50-70 X 12		2	
11	95B 145 762 A	Pipe		1	
12	06E 906 051 Q	Pressure sensor		1	
13	N 106 839 01	Oval-head screw M 6 X 12		1	
14	95B 129 381	Spacer sleeve		5	
15	999 919 269 01	Combination screw M 6 X 35		5	
16	95B 129 619	Boot Y-piece		1	
17	95B 129 852	Boot Y-piece		1	
18	95B 145 832 A	Pressure hose		1	
19	N 107 152 01	Hose clamp 100 X 12		2	
20	95B 145 555	Pressure hose		1	
21	N 102 555 01	Hose clamp 17,5 X 7 X 0,6		2	
(21)	955 201 479 00	Hose clamp 16 X 12		2	
22	95B 145 979 A	Pressure hose		1	
23	N 104 002 01	Clamp 9,1-10,9		1	
24	95B 128 146	Boot Gasket Left	/L	1	
25	95B 129 146	Boot Gasket Right	/R	1	
26		Air duct See illustrations 8/02/10 POS.9	/L	1	
27		Air duct See illustrations 8/02/10 POS.9	/R	1	
28	955 111 483 00	Clamp 11,5 X 8,4		1	
29	95B 145 219	Clip		6	

Illustration: 107-73

Model: 95B **Model life 2014>>**

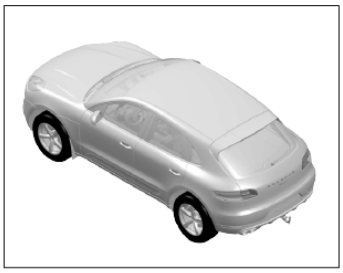

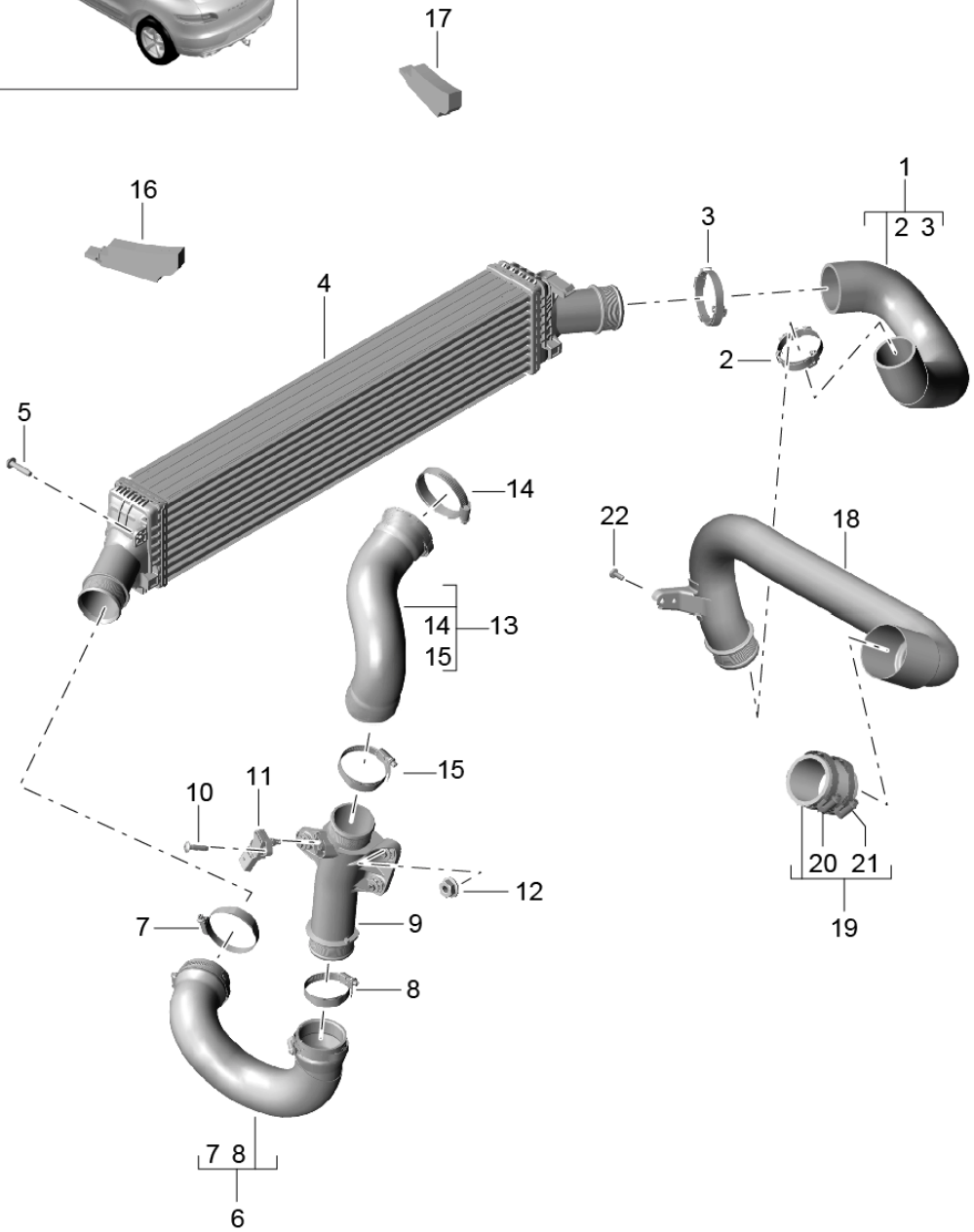

Model: 95B **Model life 2014>>**

Pos	Part Number	Description	Remark	Qty	Model
		Charge air cooler			MCD.UD MCT.BA/BB/BC
		Pressure pipe			
1	95B 145 790 B	Pressure hose		1	
2	N 106 198 01	Hose clamp 65 X 12		1	
3	N 106 199 01	Hose clamp 75 X 12		1	
4	8K0 145 805 E	Charge air cooler		1	
5	N 907 315 03	Oval-head screw M 6 X 25		1	
6	8R0 145 979 A	Pressure hose		1	
7	N 107 359 01	Hose clamp 80 X 12		1	
8	N 107 352 01	Hose clamp 80 X 12		1	
9	8K0 145 673 AB	Pressure pipe		1	
10	N 907 397 03	Oval-head screw M 5 X 22		2	
11	03G 906 051 E	Pressure sensor		1	
12	N 015 082 10	Hexagon nut M 6		3	
13	95B 145 993	Pressure hose		1	
14	N 107 359 01	Hose clamp 80 X 12		1	
15	N 106 199 01	Hose clamp 75 X 12		1	
16	95B 145 563 A	Gasket Charge air cooler Left	/L	1	
17	95B 145 563	Gasket Charge air cooler Right	/R	1	
18	059 145 731 CS	Pressure pipe		1	MCD.UD
(18)	059 145 731 FT	Pressure pipe		1	MCT.BA/BB/BC
19	059 145 737 A	Pressure hose		1	
20	N 107 349 01	Hose clamp 45-65 X 12		1	
21	N 107 356 01	Hose clamp 45-65 X 12		1	
22	N 104 056 04	Oval-head screw		2	

Illustration: 107-76

PORSCHE

Model: 95B **Model life 2014>>**

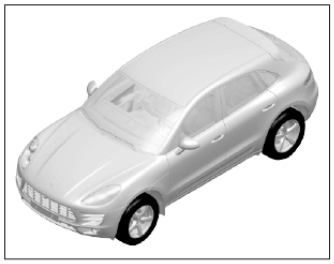

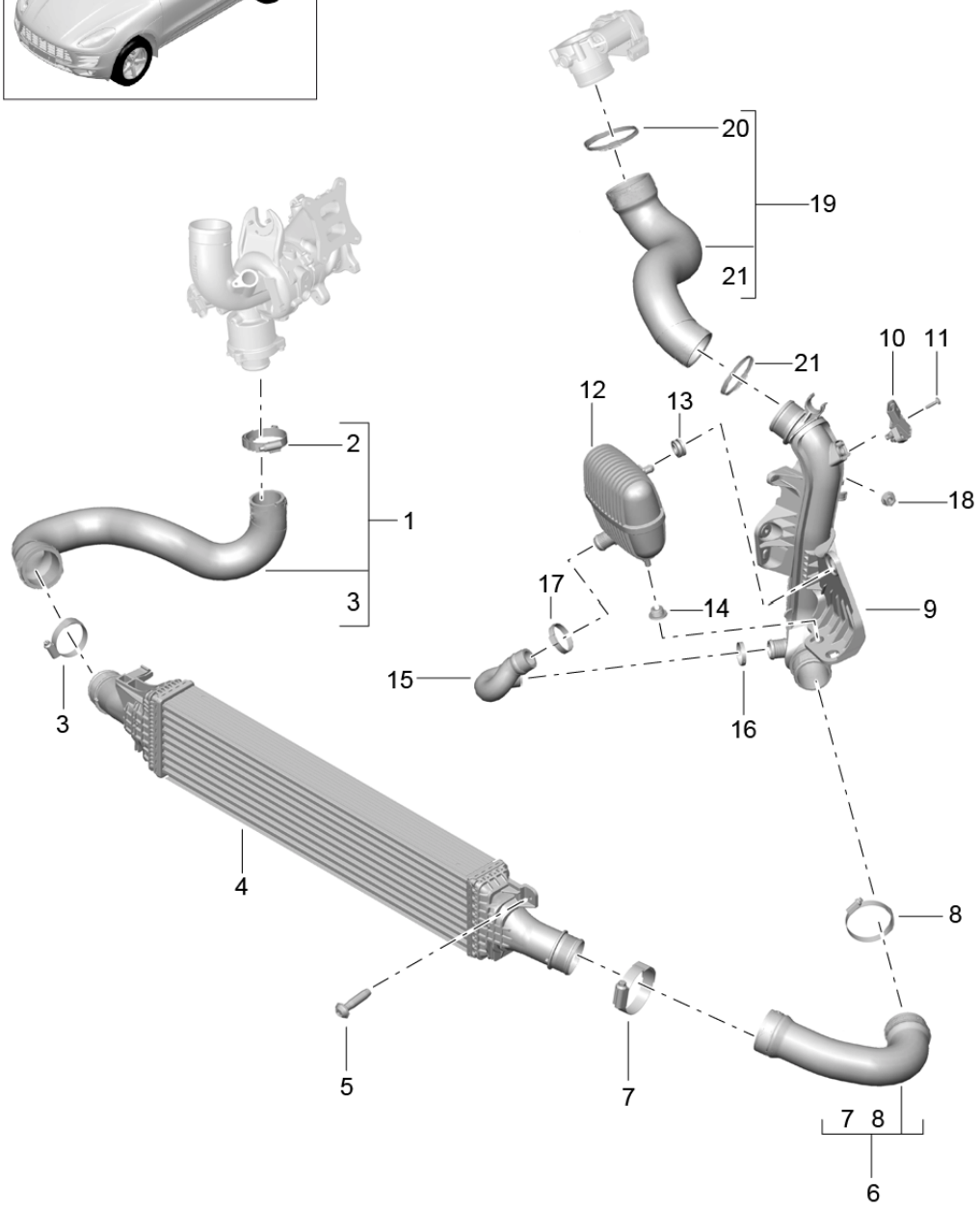

Illustration: 107-76

Model: 95B **Model life 2014>>**

Pos	Part Number	Description	Remark	Qty	Model
		Charge air cooler			MCN.CC MCY.NA/NB/PA
		Pressure pipe			
1	8R0 145 790 A	Pressure hose		1	MCN.CC MCY.NA
(1)	95B 145 790 A	Pressure hose		1	MCY.NB/PA
2	N 105 188 01	Hose clamp 60 X 12		1	
3	N 105 189 01	Hose clamp 70 X 12		1	
4	8K0 145 805 P	Charge air cooler		1	MCN.CC MCY.NA
(4)	8K0 145 805 E	Charge air cooler		1	MCY.NB/PA
5	N 907 315 03	Oval-head screw M 6 X 25		1	
6	95B 145 709	Pressure hose		1	MCN.CC MCY.NA
(6)	95B 145 709 A	Pressure hose		1	MCY.NB/PA
7	N 107 358 01	Hose clamp 75 X 12		1	MCN.CC MCY.NA
(7)	N 105 444 01	Hose clamp 80 X 12		1	MCY.NA/NB
8	N 107 357 01	Hose clamp 70 X 12		1	
9	8K0 145 673 AJ	Pressure pipe		1	
10	03G 906 051 E	Pressure sensor		1	
11	N 907 397 03	Oval-head screw		2	
12	8K0 129 955 A	Pulsation damper		1	
13	050 129 669	Grommet		1	
14	058 145 824 A	Grommet		2	
15	8K0 145 832 B	Pressure hose Pulsation damper		1	
16	N 103 132 01	Hose clamp		1	
17	N 105 771 01	Hose clamp		1	
18	N 015 082 10	Hexagon nut M6		3	
19	8R0 145 993 C	Pressure hose		1	
20	N 105 444 01	Hose clamp 80 X 12		1	
21	N 107 357 01	Hose clamp 70 X 12		1	

Illustration: 107-80

PORSCHE

Model: 95B **Model life 2014>>**

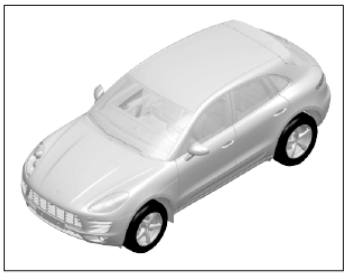

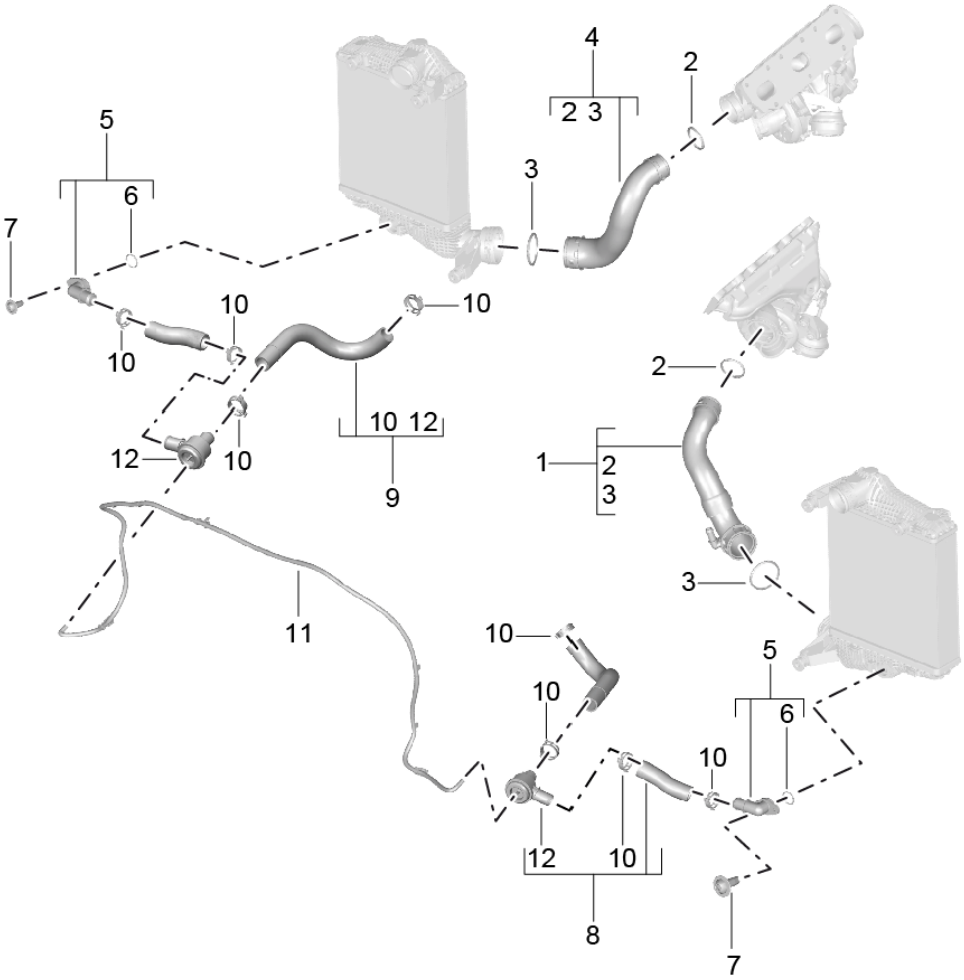

Illustration: 107-80

PORSCHE

Model: 95B **Model life 2014>>**

Pos	Part Number	Description	Remark	Qty	Model
		Supercharging 1			MCT.LA/MA MDC.NA
		Pressure pipe			
1	95B 145 833	Pressure hose	/L	1	
2	955 110 720 00	Round seal 43,95 X 3,5		2	
3	955 110 721 00	Round seal 58,05 X 3,55		2	
4	95B 145 834	Pressure hose	/R	1	
5	95B 145 977	Connection piece		2	
6	N 910 697 01	O-ring 26 X 2,5		2	
7	N 908 170 03	Oval-head screw TP 6 X 17		2	
8	95B 145 675	Control line	/L	1	
9	95B 145 676	Control line	/R	1	
10	N 906 871 01	Hose clamp B 32 X 12		8	
11	95B 145 693 B	Control line		1	
12	955 110 710 01	Shut-off valve		2	

Illustration: 107-83

PORSCHE

Model: 95B **Model life 2014>>**

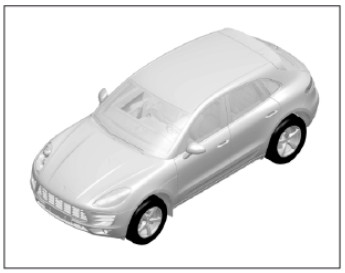

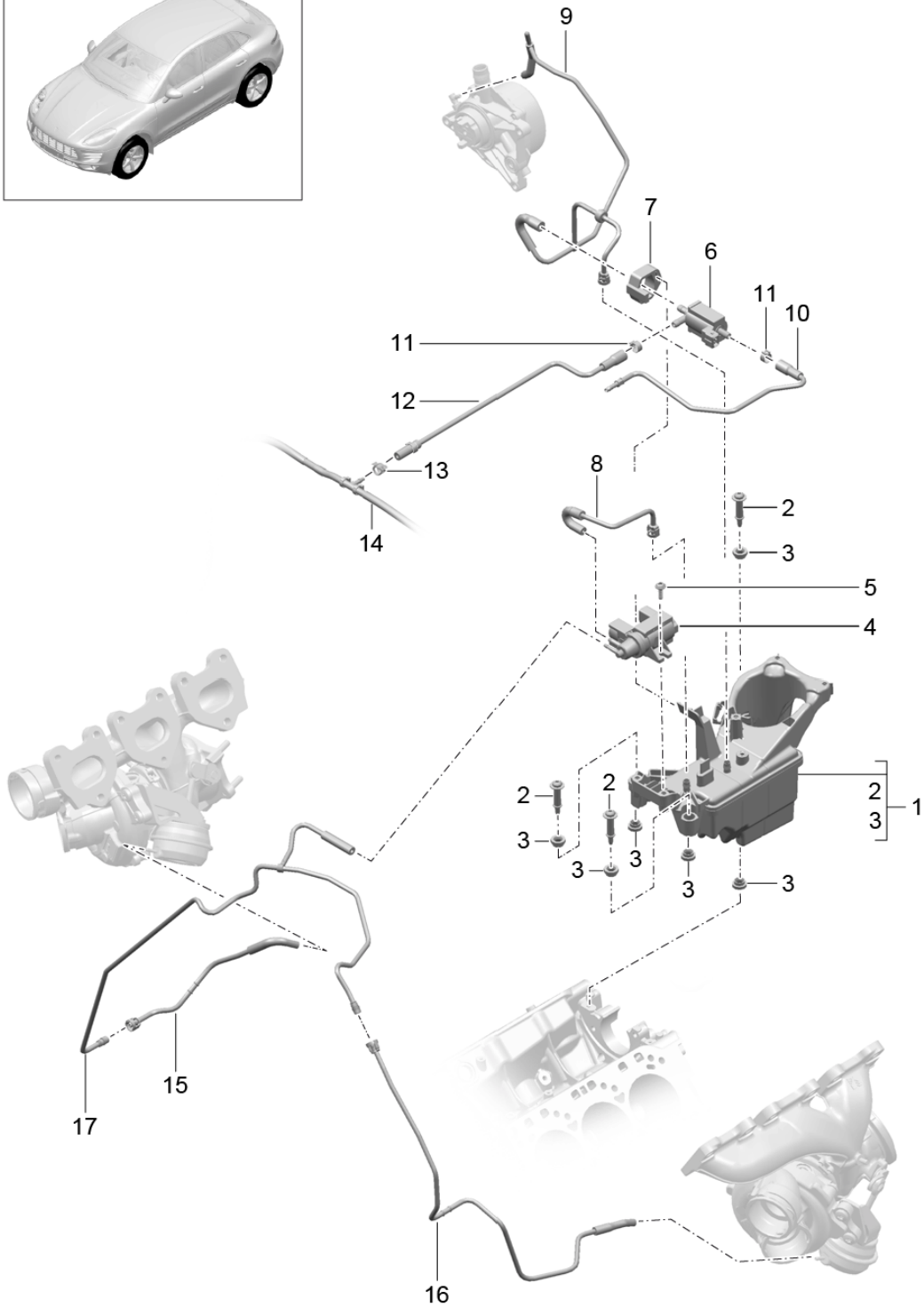

Model: 95B **Model life 2014>>**

Pos	Part Number	Description	Remark	Qty	Model
		Supercharging 2			MCT.LA/MA MDC.NA
		Vacuum tank Control line Pressure line			
1	946 110 030 77	Vacuum tank		1	
2	946 110 135 75	Fastening part with Guide sleeve		3	
3	946 110 134 75	Rubber bush		6	
4	946 605 155 00	Pressure converter		1	
5	999 919 283 01	Lens-head screw 6 X 18		2	
6	7PP 906 046	Change-over valve Electric		1	
7	7PP 906 290	Rubber holder for Change-over valve		1	
8	946 110 360 76	Vacuum line		1	
9	946 110 358 77	Vacuum line		1	
10	946 110 324 76	Pressure line		1	
11	999 512 689 00	Hose clamp 12,5 - 14		2	
12	946 110 394 75	Control line		1	
13	955 111 483 00	Clamp B 11,5 X 8,4		1	
14		Control line See illustrations 1/07/80 POS.11		1	
15	946 110 666 31	Control line		1	
16	946 110 668 32	Control line		1	
17	946 110 669 32	Control line		1	

Illustration: 108-00

PORSCHE

Model: 95B **Model life 2014>>**

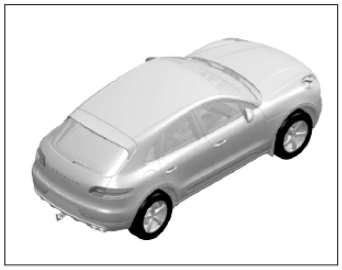

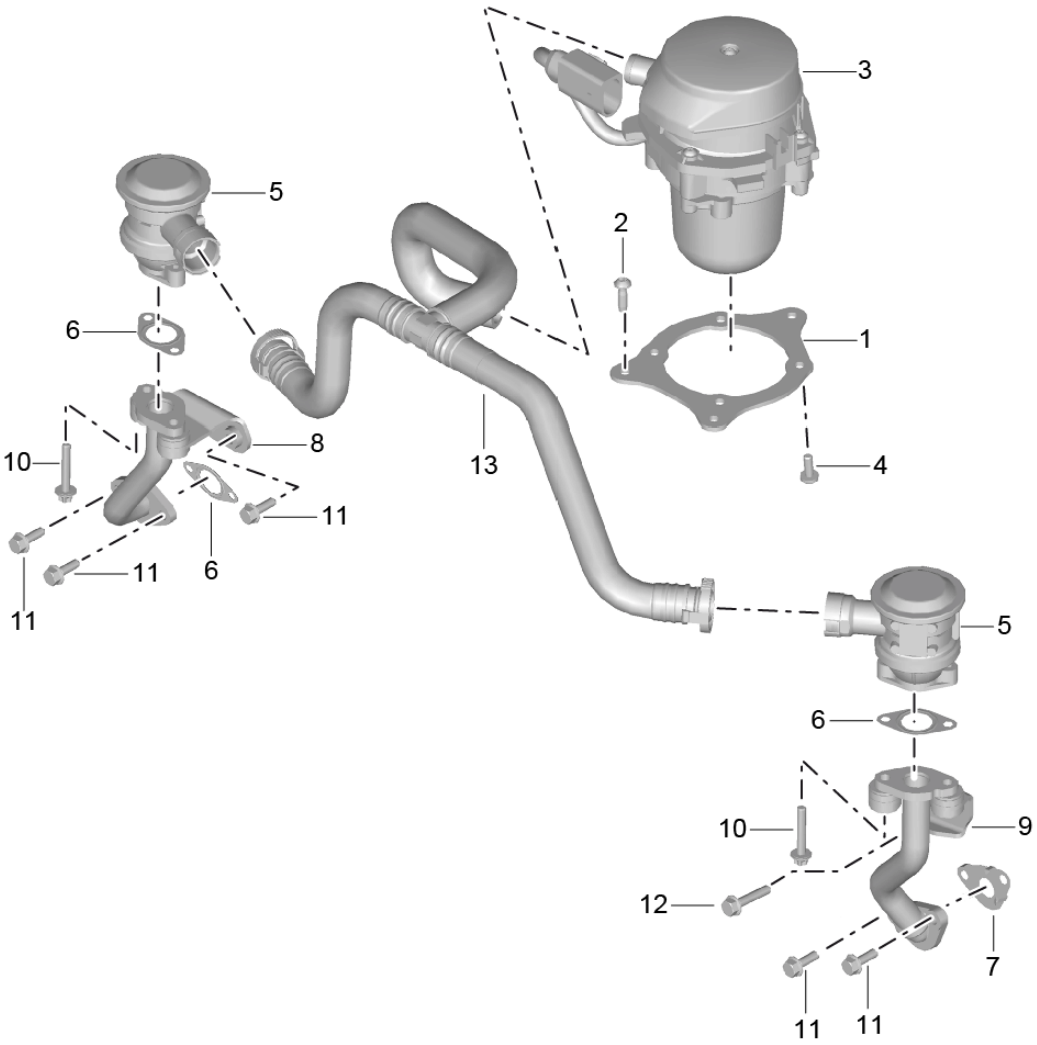

Model: 95B **Model life 2014>>**

Pos	Part Number	Description	Remark	Qty	Model
		Air injection			MCT.LA/MA MDC.NA
		Secondary pump			
1	95B 131 337	Support		1	
2	N 104 734 02	Lens-head screw TP 6 X 20		3	
3	95B 959 253	Secondary pump		1	
-	999 507 085 40	Clip Connector housing Secondary pump		1	
4	N 104 514 05	Round head screw M 6 X 16		4	
5	997 113 203 71	Valve		2	
6	993 113 258 51	Gasket		3	
7	95B 131 120	Gasket		1	
8	946 113 131 31	Pipe	/L	1	
9	946 113 132 31	Pipe	/R	1	
10	900 385 019 01	Torx screw BM 6 X 20		4	
11	N 106 533 02	Hexagon-head bolt M 6 X 20		5	
12	N 107 176 01	Hexagon-head bolt M 6 X 32		1	
13	946 113 022 30	Pipeline Complete		1	

Illustration: 108-30

PORSCHE

Model: 95B **Model life 2014>>**

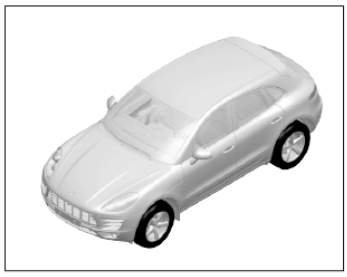

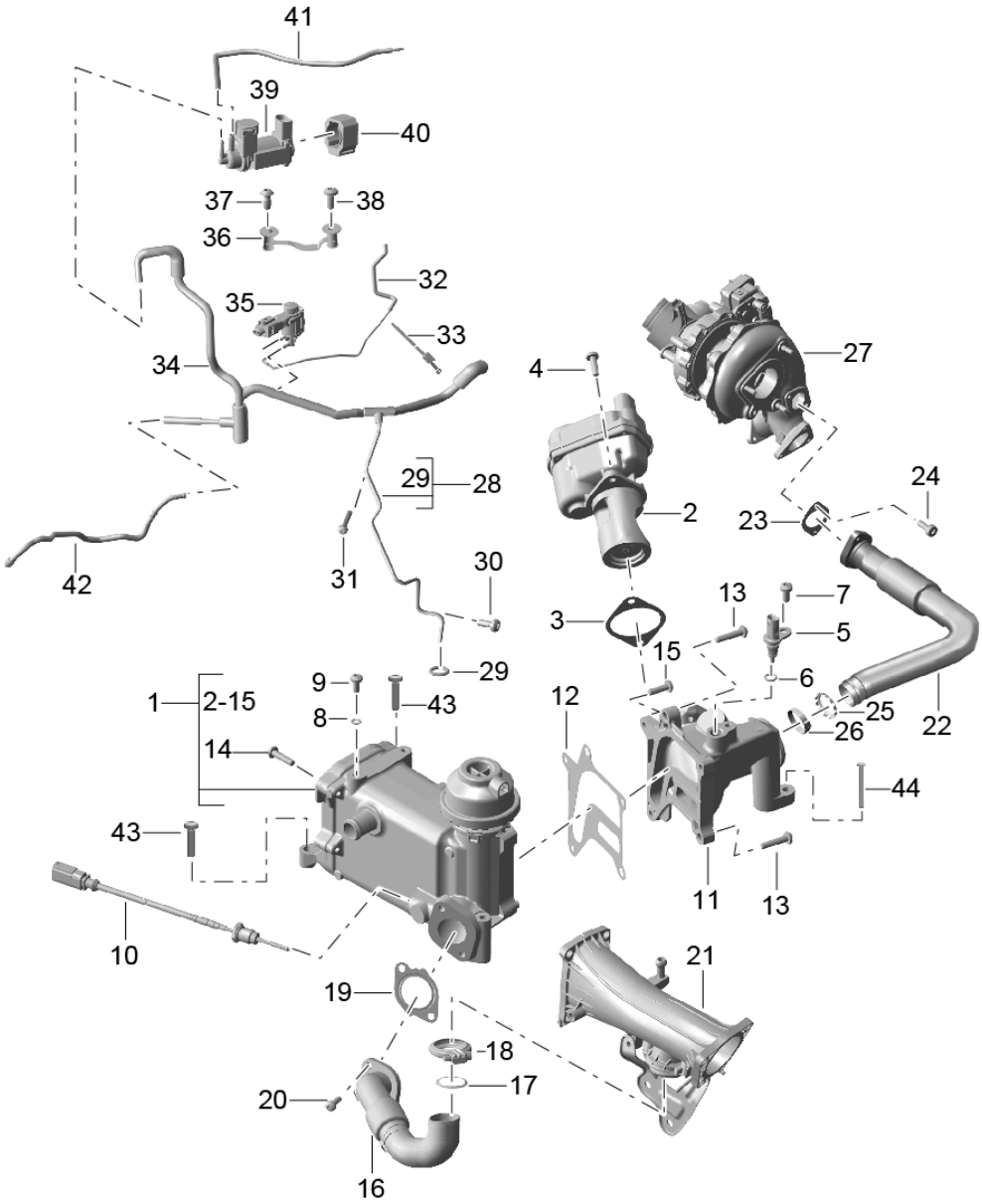

Model: 95B **Model life 2014>>**

Pos	Part Number	Description	Remark	Qty	Model
		Exhaust gas recirculation			MCD.UD MCT.BA/BB/BC
		Vacuum system			
1	958 111 011 12	Heat dissipator Exhaust gas recirculation		1	MCD.UD
(1)	958 111 011 13	Heat dissipator Exhaust gas recirculation		1	MCD.UD
(1)	958 111 011 50	Heat dissipator Exhaust gas recirculation		1	MCT.BA/BB/BC
(1)	958 111 011 60	Heat dissipator Exhaust gas recirculation		1	MCT.BA/BB/BC
(1)	958 111 011 70	Heat dissipator Exhaust gas recirculation		1	MCT.BA/BB/BC
2	958 111 051 11	Egr valve		1	
(2)	958 111 051 30	Egr valve		1	MCD.UD
(2)	958 111 051 40	Egr valve		1	MCT.BA/BB/BC
3	958 111 120 10	Gasket		1	
(3)	958 111 120 11	Gasket		1	
4	N 101 243 06	Oval-head screw M 6 X 20		2	
5	958 606 623 20	Temperature sensor		1	
6	WHT 002 287 B	O-ring 5,6 X 2		1	
7	N 106 507 01	Pan-head screw M 6 X 12		1	
8	N 013 804 2	Sealing ring A 6 X 10		1	
9	N 104 056 04	Oval-head screw M 6 X 14		1	
10	958 606 688 20	Temperature sensor		1	
(10)	958 606 688 21	Temperature sensor		1	
(10)	958 606 688 22	Temperature sensor		1	
11	958 111 223 00	Valve housing		1	MCD.UD
12	958 111 599 00	Gasket		1	MCD.UD
13	N 910 680 01	Oval-head screw M 6 X 28		2	MCD.UD
14	N 104 134 05	Outer hexagon round screw M 6 X 25		7	MCD.UD
15	N 101 243 06	Oval-head screw M 6 X 20		3	MCD.UD
16	958 111 530 00	Connecting tube		1	
17	958 111 547 10	Gasket		1	
18	958 111 725 00	Clip		1	
(18)	1K0 253 725 F	Clip		1	
19	958 107 358 00	Gasket	-14	1	
(19)	958 107 358 10	Gasket	15-	1	
20	N 101 243 06	Oval-head screw M 6 X 20		2	
21		Air guide housing See illustrations 1/07/66 POS.12		1	
22	958 111 525 00	Connecting tube		1	
23	958 107 358 10	Gasket		1	
24	N 911 962 01	Pan-head screw M 6 X 16		2	
25	958 111 547 20	Gasket		1	
26	958 111 548 04	Clip		1	
(26)	958 111 548 05	Clip		1	
27		Turbocharger See illustrations 2/02/20 POS.1		1	

Model: 95B **Model life 2014>>**

Pos	Part Number	Description	Remark	Qty	Model
28	958 111 556 02	Vacuum line		1	
29	N 908 091 02	O-ring 16 X 2		1	
30	N 107 500 01	Outer hexagon round screw M 6 X 16		1	
31	N 105 540 05	Oval-head screw M 6 X 35		1	
32	958 111 492 00	Vacuum line		1	
33	958 606 838 50	Tie-wrap		X	
34	958 111 551 11	Vacuum line		1	
35	955 605 283 10	Change-over valve		1	
36	958 110 245 20	Support		1	
37	N 107 214 01	Oval-head screw 6 X 16		1	
38	N 104 056 04	Oval-head screw M 6 X 14		1	
39	958 606 627 00	Pressure converter		1	
40	958 606 629 00	Mounting		1	
41	958 111 492 11	Vacuum line		1	
42	059 131 055 M	Vacuum line		1	
43	N 104 134 05	Outer hexagon round screw M 6 X 25		2	
44	N 106 703 01	Outer hexagon round screw M 6 X 55		2	

Illustration: 109-00

Model: 95B **Model life 2014>>**

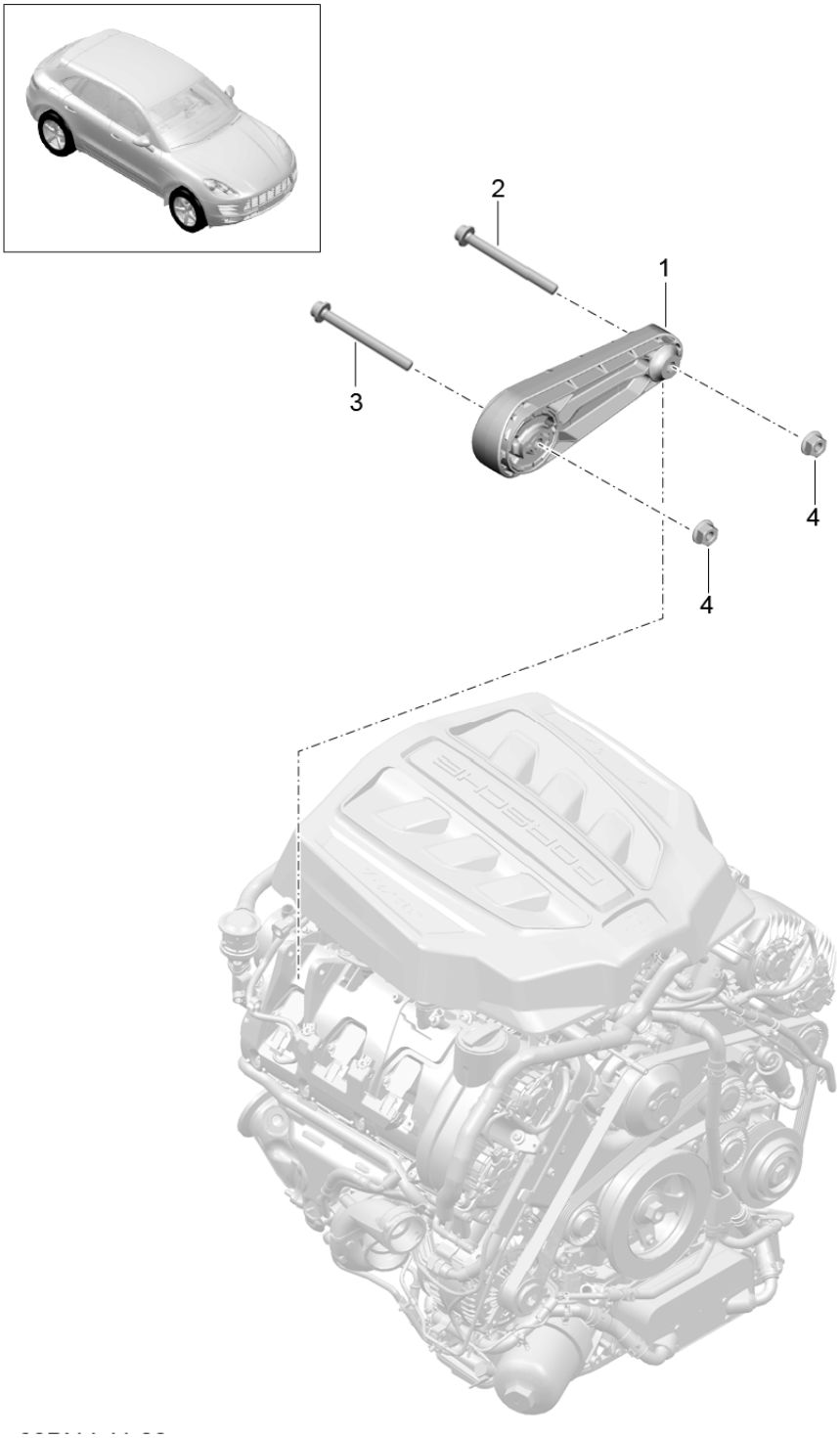

Illustration: 109-00

PORSCHE

Model: 95B **Model life 2014>>**

Pos	Part Number	Description	Remark	Qty	Model
		Engine suspension			MCT.LA/MA MDC.NA
		Engine carrier			
1	7PP 199 331 A	Bracket Upper Use also:		1	
		WHT.004.595		1	
		WHT.005.204		1	
		WHT.004.635		2	
2	WHT 004 595	Pan-head screw Aluminium M 10 X 90		1	
3	WHT 005 204	Pan-head screw Aluminium M 10 X 80		1	
4	WHT 004 635	Hexagon nut M 10		2	

Illustration: 109-10

PORSCHE

Model: 95B **Model life 2014>>**

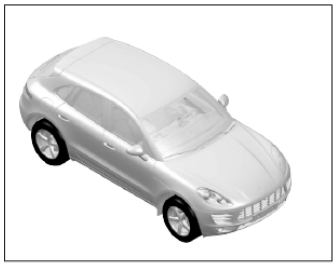

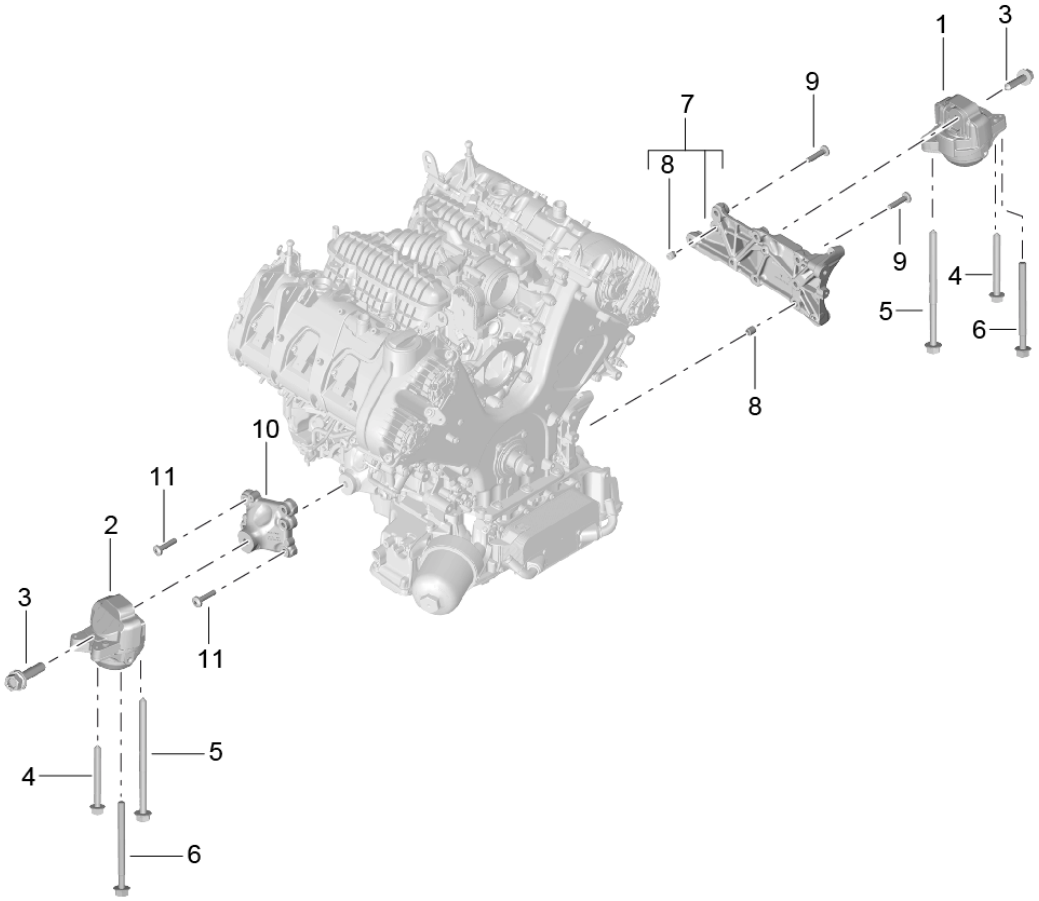

Illustration: 109-10

PORSCHE

Model: 95B **Model life 2014>>**

Pos	Part Number	Description	Remark	Qty	Model
		Engine suspension			MCT.LA/MA MDC.NA
		Engine mounting			
1	946 375 057 31	Engine mounting Use also: N .911.489.01	/L	1 1	
(1)	946 375 057 40	Engine mounting Use also: N .911.489.01	/L	1 1	
2	946 375 058 31	Engine mounting Use also: N .911.489.01	/R	1	
(2)	946 375 058 40	Engine mounting Use also: N .911.489.01	/R	1	
3	N 911 489 01	Combination screw M 12 X 1,5 X 60		2	
4	N 910 734 02	Hexagon-head bolt M 8 X 75		2	
5	N 107 993 01	Hexagon-head bolt M 8 X 125 X 80		2	
6	N 107 822 01	Hexagon-head bolt M 8 X 95 X 80		2	
7	946 102 025 30	Engine bracket	/L	1	
8	999 095 066 00	Dowel sleeve M 6 X 15		2	
9	999 073 460 01	Round head screw M 10 X 45		8	
10	946 115 211 31	Engine carrier	/R	1	
11	999 073 460 01	Round head screw M 10 X 45		5	

Illustration: 109-20

PORSCHE

Model: 95B **Model life 2014>>**

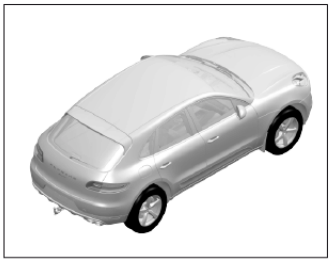

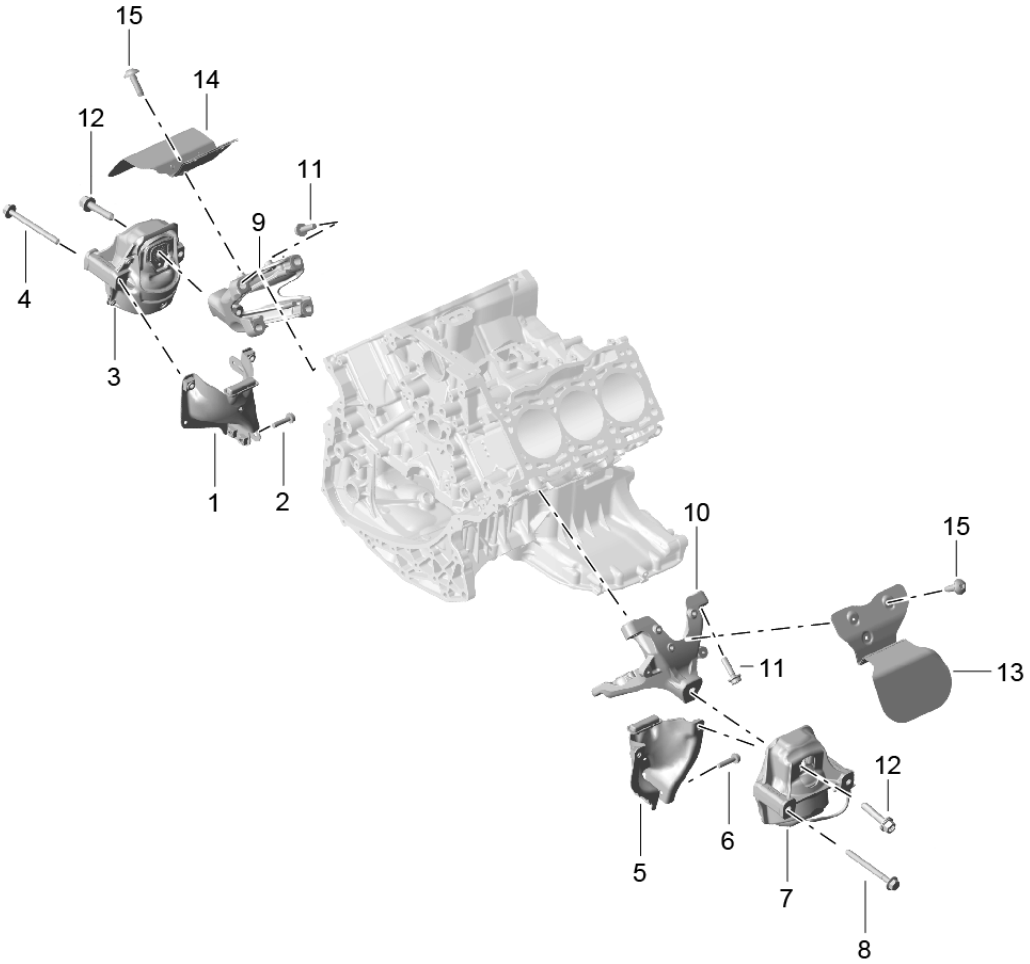

Model: 95B **Model life 2014>>**

Pos	Part Number	Description	Remark	Qty	Model
		Engine suspension			MCD.UD MCT.BA/BB/BC
		Lower			
1	8K0 399 059 F	Connecting piece	/L	1	
		Use also:			
		N .911.744.01		2	
2	N 911 744 01	Multiple-tooth screw	/L	2	
		M 8 X 35			
3	8R0 199 381 Q	Engine mounting	/L	1	
		Use also:			
		8R0.199.381.AA		1	
		8K0.199.307.BJ		1	
		4G0.199.308.K		1	
		N .911.489.01		2	
4	N 107 110 01	Hexagon-head bolt	/L	2	
		M 10 X 110			
5	8K0 399 060 L	Connecting piece	/R	1	
		Use also:			
		N .911.744.01		2	
6	N 911 744 01	Multiple-tooth screw		2	
		M 8 X 35			
7	8R0 199 381 AA	Engine mounting	/R	1	
		Use also:			
		8R0.199.381.Q		1	
		8K0.199.307.BJ		1	
		4G0.199.308.K		1	
		N .911.489.01		2	
8	N 107 110 01	Hexagon-head bolt		2	
		M 10 X 110			
9	8K0 199 307 BJ	Engine carrier	/L	1	
		Use also:			
		8R0.199.381.Q		1	
		8R0.199.381.AA		1	
		4G0.199.308.K		1	
		N .911.489.01		2	
10	4G0 199 308 K	Engine carrier	/R	1	
		Use also:			
		8R0.199.381.Q		1	
		8R0.199.381.AA		1	
		8K0.199.307.BJ		1	
		N .911.489.01		2	
11	N 107 026 03	Pan-head screw		8	
		M 10 X 35			
12	N 911 489 01	Combination screw		2	
		M 12 X 1,5 X 60			
13	8K0 199 388 BD	Heat shield	/R	1	
		Right			
14	8K0 199 387 S	Heat shield	/L	1	
		Left			
15	N 107 254 01	Hexagon socket head bolt		6	
		M 6 X 30			

Illustration: 109-30

Model: 95B **Model life 2014>>**

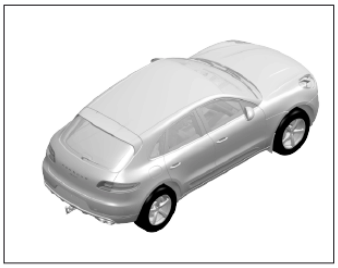

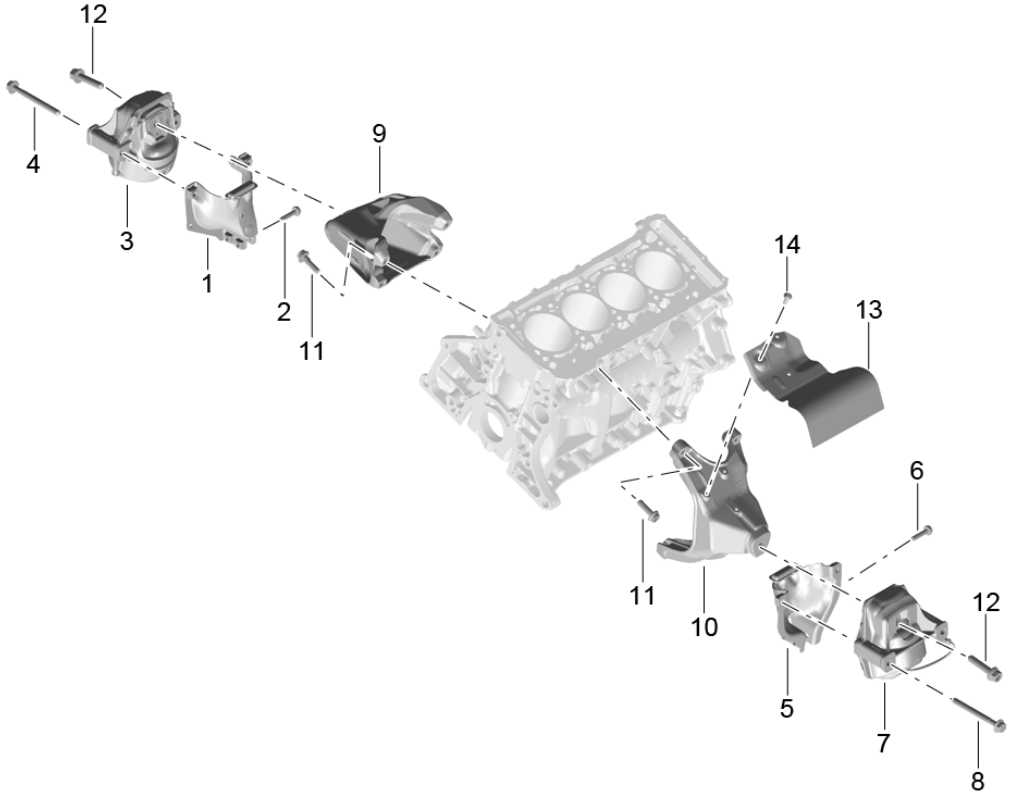

Model: 95B **Model life 2014>>**

Pos	Part Number	Description	Remark	Qty	Model
		Engine suspension			MCN.CC MCY.NA/NB/PA
		Lower			
1	8K0 399 059 H	Connecting piece	/L	1	
		Use also:			
		N .911.744.01		2	
2	N 911 744 01	Multiple-tooth screw		2	
		M 8 X 35			
3	8R0 199 381 C	Engine mounting	/L	1	
		Use also:			
		8R0.199.381.AK		1	
		8K0.199.307.CB		1	
		8K0.199.308.CH		1	
		N .911.489.01		2	
4	N 107 110 01	Hexagon-head bolt	/L	2	
		M 10 X 110			
5	8K0 399 060 L	Connecting piece	/R	1	
		Use also:			
		N .911.744.01		2	
6	N 911 744 01	Multiple-tooth screw		2	
		M 8 X 35			
7	8R0 199 381 AK	Engine mounting	/R	1	
		Use also:			
		8R0.199.381.C		1	
		8K0.199.307.BJ		1	
		8K0.199.308.CB		1	
		N .911.489.01		2	
8	N 107 110 01	Hexagon-head bolt		2	
		M 10 X 110			
9	8K0 199 307 CB	Engine carrier	/L	1	
		Use also:			
		8R0.199.381.C		1	
		8R0.199.381.AK		1	
		8K0.199.308.CH		1	
		N .911.489.01		2	
10	8K0 199 308 CH	Engine carrier	/R	1	
		Use also:			
		8R0.199.381.C		1	
		8R0.199.381.AK		1	
		8K0.199.307.CB		1	
		N .911.489.01		2	
11	N 107 026 03	Pan-head screw		8	
		M 10 X 35			
12	N 911 489 01	Combination screw		2	
		M 12 X 1,5 X 60			
13	8K0 199 388 BN	Heat shield	/R	1	
		Right			
14	N 107 254 01	Hexagon socket head bolt		3	
		M 6 X 30			

Illustration: 201-00

PORSCHE

Model: 95B **Model life 2014>>**

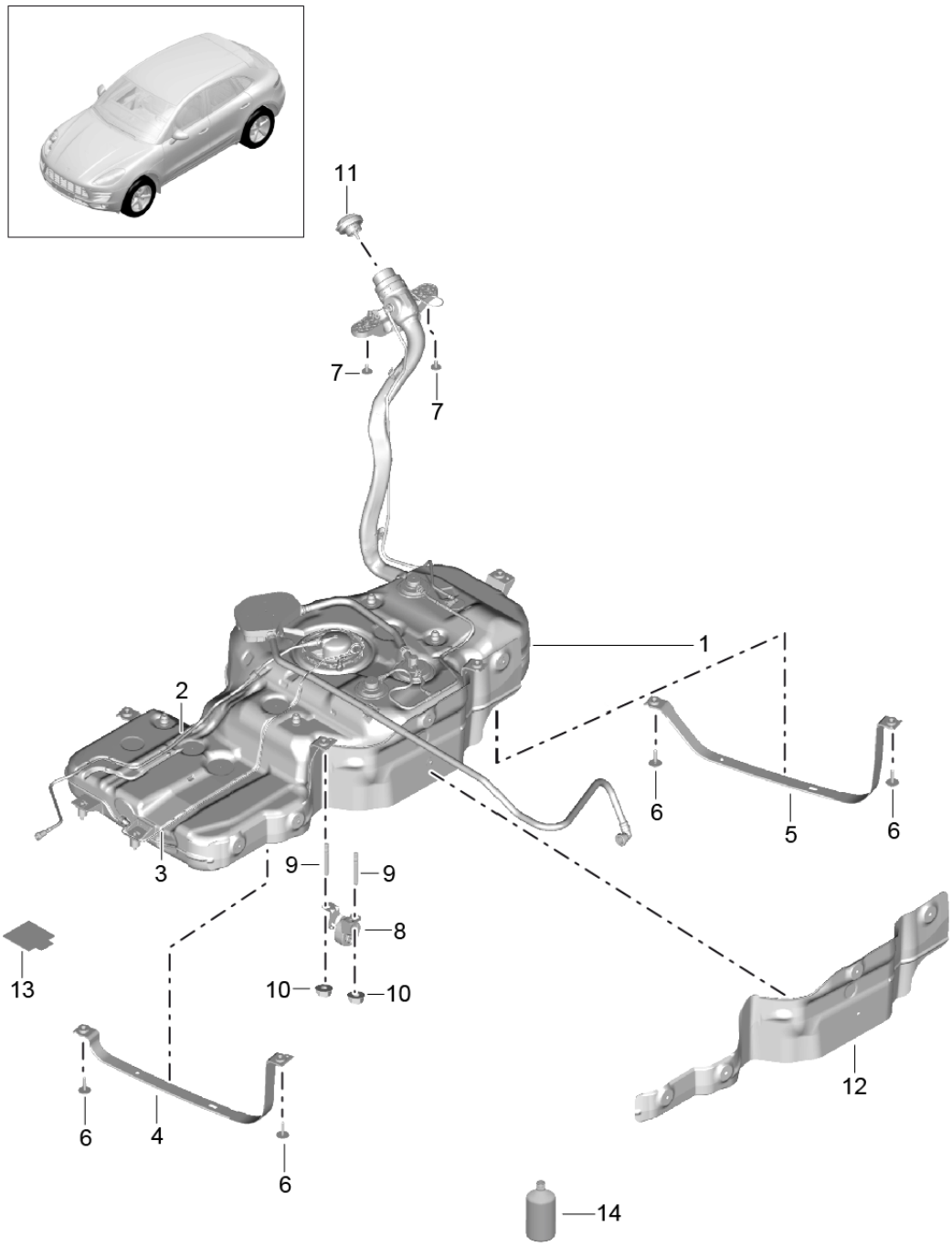

Model: 95B **Model life 2014>>**

Pos	Part Number	Description	Remark	Qty	Model
		Fuel tank			MCN.CC MCT.LA/MA MCY.NA/PA
		with			MCY.NB MDC.NA
		Accessories			
1	95B 201 060 B	Fuel tank		1	I0M6/2G1
(1)	95B 201 060 E	Fuel tank		1	I0M6/2G1/2G7
(1)	8R0 201 060 AH	Fuel tank		1	I0M2/2G1
(1)	8R0 201 060 AG	Fuel tank		1	I0M2/2G1/2G7
2	8R0 201 220 A	Fuel line Supply		1	
-	N 107 162 01	Spacer		1	
3	8R0 261 238 F	Fuel line		1	I2G1/9M1/9M9
4	8R0 201 653	Restraining strap Expansion rivet Only Assembly aux. material		1	
5	8R0 201 653 A	Restraining strap Expansion rivet Only Assembly aux. material		1	
6	N 911 591 01	Combination screw M 8 X 40		4	
7	N 908 090 03	Combination screw M 8 X 25		2	
8	8K0 253 144 F	Support Rear muffler		1	
9	999 061 408 01	Stud		2	
10	N 023 003 16	Hexagon nut		2	
11	95B 201 550	Lid with Retaining strap		1	I2G1/2G7/2W0
12	8R0 201 308 D	Heat protection		1	
-	N 911 851 01	Combination screw M 5 X 14		5	
13	8R0 201 963 A	Heat protection		1	
14	000 043 206 89	Additive Fuel 100 ML Container	(CN)	X	
(14)	000 043 209 02	Additive Fuel 100 ML Container	(CN) (KARI	X	

Illustration: 201-10

Model: 95B **Model life 2014>>**

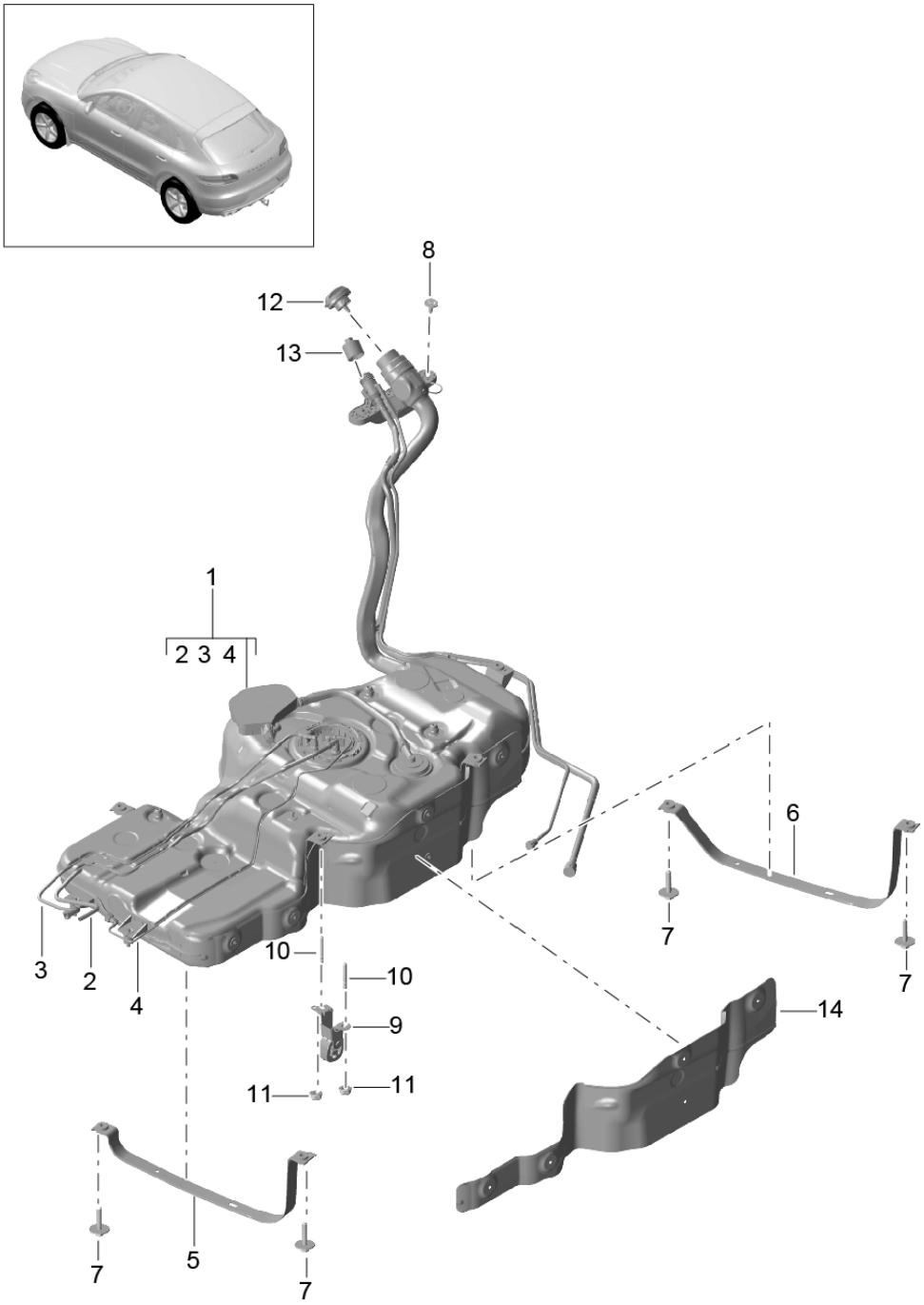

Model: 95B **Model life 2014>>**

Pos	Part Number	Description	Remark	Qty	Model
		Fuel tank			MCD.UD MCT.BA/BB/BC
		with Accessories			
1	95B 201 060	Fuel tank		1	MCD.UD I0M5/1E0
(1)	8R0 201 060 AA	Fuel tank		1	MCD.UD I0M2/1E0
(1)	8R0 201 060 AB	Fuel tank		1	MCD.UD I0M2/1E0
(1)	95B 201 060 A	Fuel tank		1	MCT.BA/BB/BC I0M5/1E9
(1)	8R0 201 060 AC	Fuel tank		1	MCT.BA/BB/BC I0M2/1E9
(1)	8R0 201 060 AD	Fuel tank		1	MCT.BA/BB/BC I0M2/1E9
2	8R0 201 220 C	Fuel line Supply		1	
3	8R0 201 227 A	Fuel line Return line		1	
4	8R0 261 238 E	Fuel line		1	I9M1/9M9
5	8R0 201 653	Restraining strap Expansion rivet Only Assembly aux. material		1	
6	8R0 201 653 A	Restraining strap Expansion rivet Only Assembly aux. material		1	
7	N 911 591 01	Combination screw		4	
8	N 908 090 03	Combination screw M 8 X 25		2	
9		Support See illustrations 2/02/50 POS.10		1	
10	999 061 408 01	Stud		2	
11	N 023 003 16	Hexagon nut		2	
12	95B 201 550 A	Lid		1	MCD.UD -I1E9/I2W0
		with Retaining strap			
(12)	95B 201 550 D	Lid		1	MCT.BA/BB/BC I1E9/2W0
		with Retaining strap			
13	4L0 131 980 C	Lid		1	MCT.BA/BB/BC I1E9
14	8R0 201 308 D	Heat protection		1	
-	N 911 851 01	Combination screw M 5 X 14		5	

Illustration: 201-12

PORSCHE

Model: 95B **Model life 2014>>**

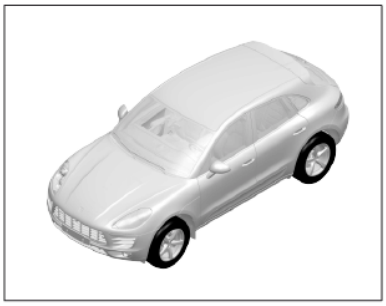

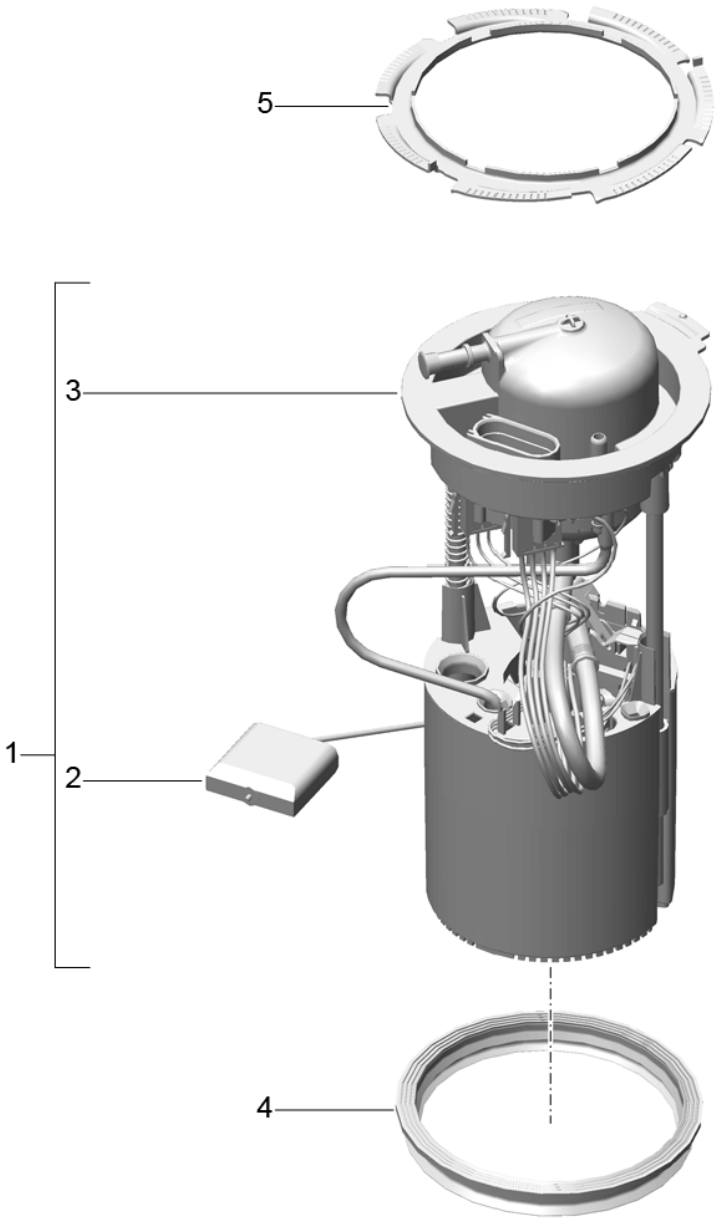

Model: 95B **Model life 2014>>**

Pos	Part Number	Description	Remark	Qty	Model
		Fuel pump			MCN.CC MCT.LA/MA MCY.NA/PA
		Complete			MCY.NB MDC.NA
1	8R0 919 051 F	Fuel pump with Venturi tube		1	I2G1/9M0
(1)	8R0 919 051 H	Fuel pump with Venturi tube		1	I2G4/2G7/9M0
(1)	8R0 919 051 G	Fuel pump with Venturi tube		1	I2G1/9M1/9M9
(1)	8R0 919 051 J	Fuel pump with Venturi tube		1	I2G7/9M1/9M9
2	8R0 919 673 D	Tank gauge		1	I2G1
(2)	8R0 919 673 F	Tank gauge		1	I2G4/2G7
3	8R0 919 679	Flange with Fuel filter		1	I2G1/2G4/9M0
(3)	8R0 919 679 E	Flange with Fuel filter		1	I2G1/2G4/9M0
(3)	8R0 919 679 A	Flange with Fuel filter		1	I2G1/9M1/9M9
(3)	8R0 919 679 D	Flange with Fuel filter		1	I2G1/9M1/9M9
4	1K0 919 133 D	Gasket		1	I2G1
5	955 201 623 01	Union nut		1	

Illustration: 201-15

PORSCHE

Model: 95B **Model life 2014>>**

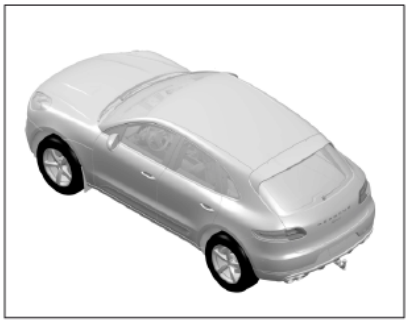

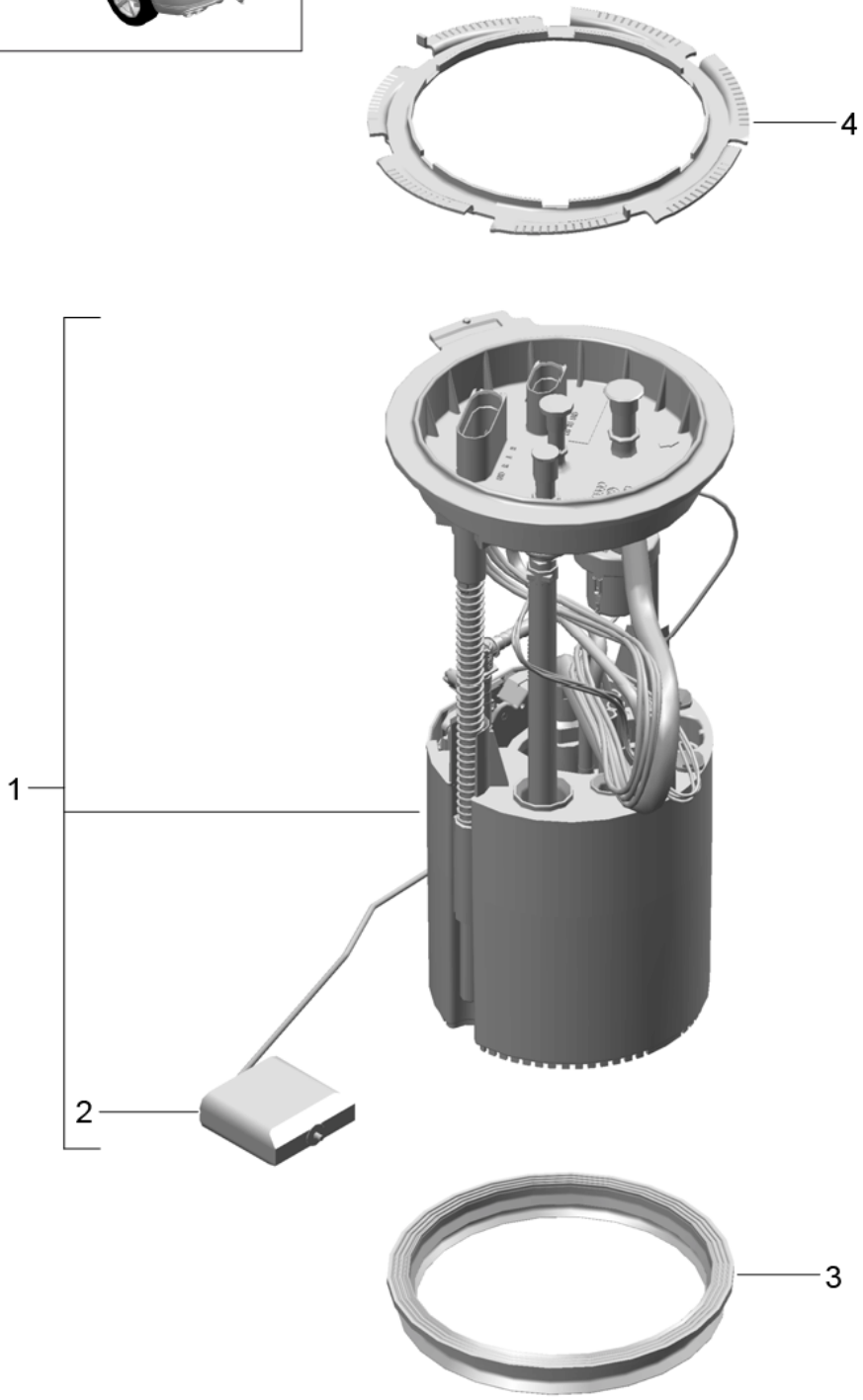

Model: 95B **Model life 2014>>**

Pos	Part Number	Description	Remark	Qty	Model
		Fuel pump			MCD.UD MCT.BA/BB/BC
		Complete			
1	8R0 919 050 D	Fuel pump with Venturi tube		1	I9M0
(1)	8R0 919 050 E	Fuel pump with Venturi tube		1	I9M1/9M9
2	8R0 919 673 D	Tank gauge		1	I2G0
(2)	8R0 919 673 F	Tank gauge		1	I2G4/2G7
3	1K0 919 133 D	Gasket		1	
4	955 201 623 01	Union nut		1	

Illustration: 201-20

PORSCHE

Model: 95B **Model life 2014>>**

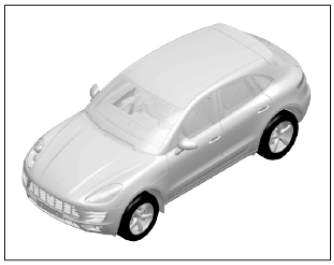

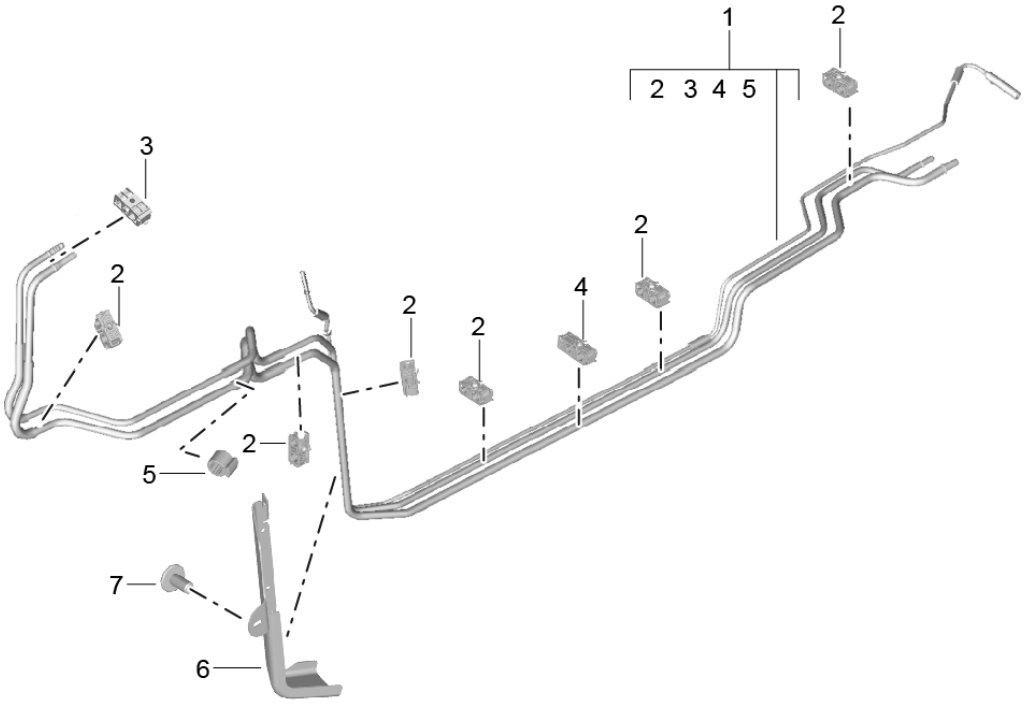

Model: 95B **Model life 2014>>**

Pos	Part Number	Description	Remark	Qty	Model
		Fuel system			MCT.LA/MA MDC.NA
		Fuel line Underbody			
1	95B 201 544 G	Fuel line Complete set		1	I9M0
(1)	95B 201 544 AA	Fuel line Complete set		1	I9M0
(1)	95B 201 544 F	Fuel line Complete set		1	I9M1/9M9
(1)	95B 201 544 R	Fuel line Complete set		1	I9M1/9M9
2	8K0 201 190 H	Fastening clamp		6	I9M0
(2)		Fastening clamp		2	I9M1/9M9
3	95B 201 190	Fastening clamp		1	I9M0
(3)		Fastening clamp		1	I9M1/9M9
4	8K0 201 190 F	Fastening clamp		4	I9M1/9M9
5	958 110 722 40	Spacer		1	
6	8R0 201 192 B	Cover		1	
7	N 104 065 05	Oval-head screw M 6 X 12		3	

Illustration: 201-25

PORSCHE

Model: 95B **Model life 2014>>**

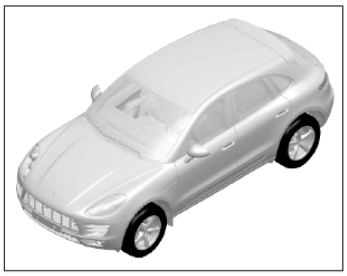

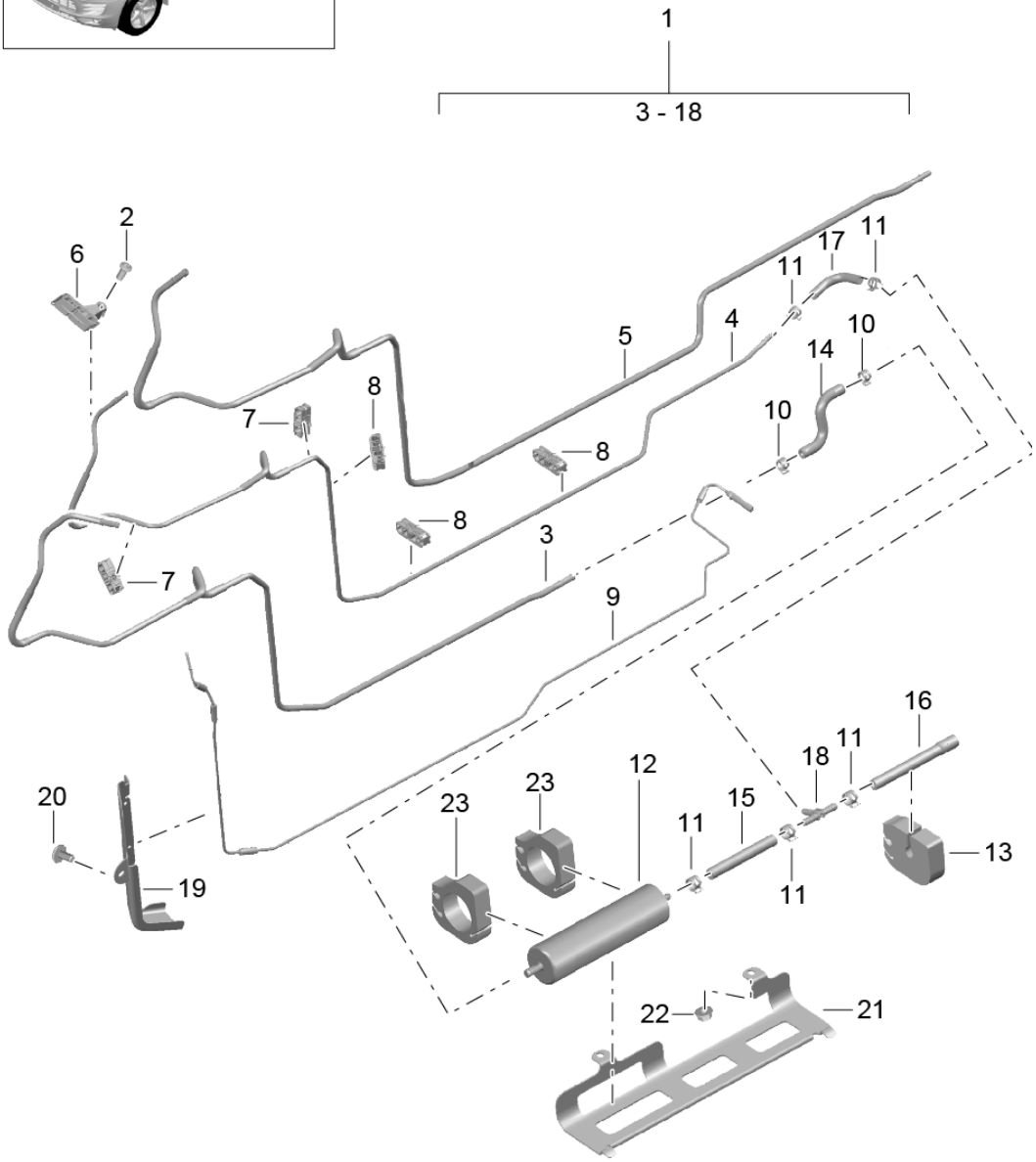

Illustration: 201-25

Model: 95B **Model life 2014>>**

Pos	Part Number	Description	Remark	Qty	Model
		Fuel system			MCD.UD MCT.BA/BB/BC
		Fuel line Underbody			
1	95B 201 544 E	Fuel line Complete set		1	I9M1/9M9
(1)	95B 201 544 Q	Fuel line Complete set		1	I9M1/9M9
(1)	95B 201 544 D	Fuel line Complete set		1	I9M0
(1)	95B 201 544 T	Fuel line Complete set		1	I9M0
2	4D0 201 834 C	Cap		1	I9M0
3	95B 201 545 B	Fuel line		1	
(3)	95B 201 545 E	Fuel line		1	
4	95B 201 533	Return line		1	
(4)	95B 201 533 A	Return line		1	
5	95B 201 547	Return line		1	
(5)	95B 201 547 A	Return line		1	
6	8K0 201 449 AH	Fastening clamp		1	
7	8K0 201 190 D	Fastening clamp		2	I9M1/9M9
(7)		Fastening clamp		6	I9M0
8	8K0 201 190 G	Fastening clamp		3	I9M0
9	95B 261 191	Fuel line		1	I9M1/9M9
10	955 201 479 00	Hose clamp		2	
11	N 909 865 01	Hose clamp		5	
12	8R0 127 400 A	Fuel filter with Fastening part		1 2	
(12)	8T0 127 401 A	Fuel filter without Fastening part		1 2	
13	8R0 201 196 G	Seal		1	
14	8R0 201 541 R	Connecting hose		1	
15	8R0 201 541 L	Connecting hose		1	
16	8R0 201 541 Q	Connecting hose		1	
17	8R0 201 543 J	Connecting hose		1	
18	4H0 201 346	T-piece		1	
19	8R0 201 192 B	Cover		1	
20	N 104 065 05	Oval-head screw M 6 X 12		3	
21	8R0 201 710 B	Support Fuel filter		1	
22	N 015 082 10	Hexagon nut M 6		2	
23	8R0 201 196 H	Fastening part		2	

Illustration: 201-27

PORSCHE

Model: 95B **Model life 2014>>**

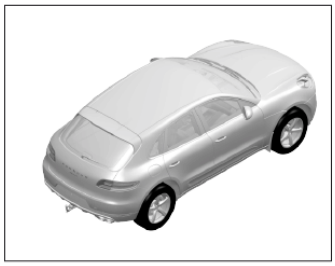

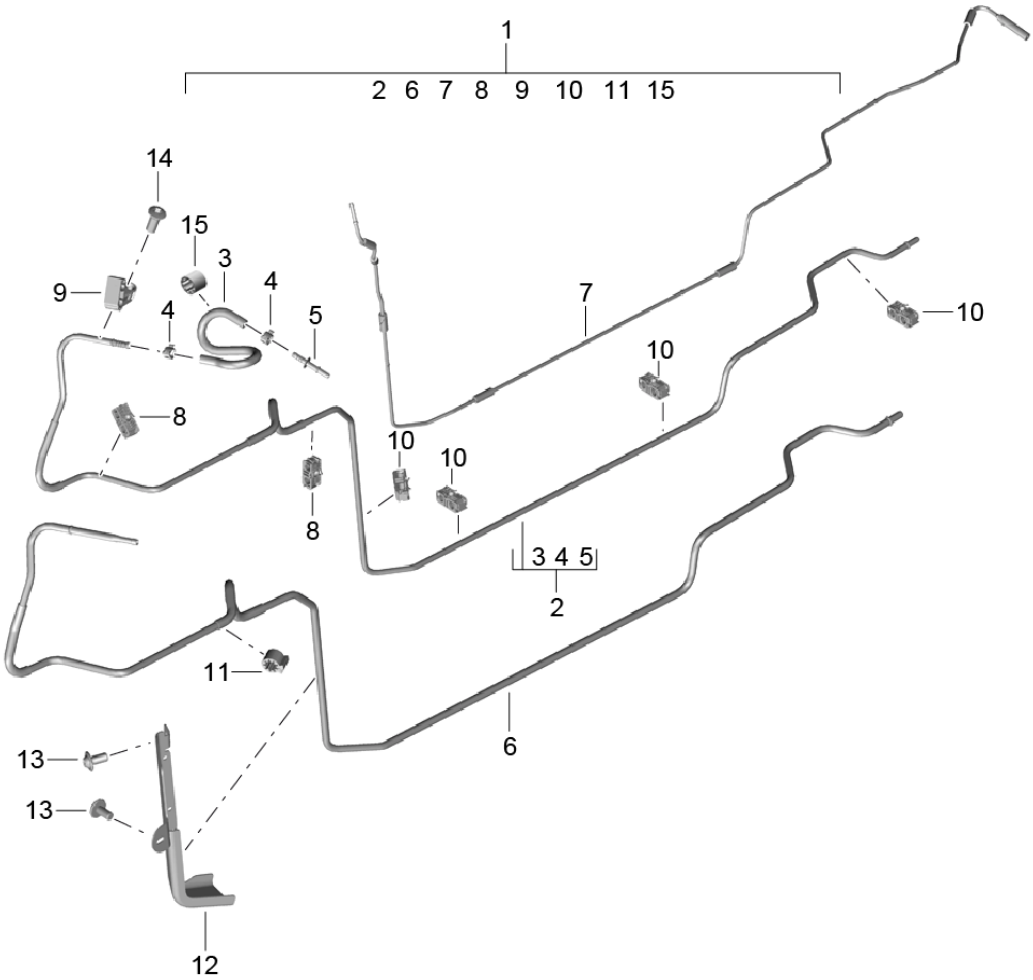

Model: 95B **Model life 2014>>**

Pos	Part Number	Description	Remark	Qty	Model
		Fuel system			MCN.CC MCY.NA/NB/PA
		Fuel line Underbody			
1	95B 201 544 H	Fuel line Complete set		1	I9M0
(1)	95B 201 544 AB	Fuel line Complete set		1	I9M0
(1)	95B 201 544 AD	Fuel line Complete set		1	I9M0
(1)	95B 201 544 AE	Fuel line Complete set		1	I9M0
(1)	95B 201 544 P	Fuel line Complete set		1	I9M1/9M9
(1)	95B 201 544 S	Fuel line Complete set		1	I9M1/9M9
(1)	95B 201 544 AC	Fuel line Complete set Use also: POS.15		1	I9M1/9M9
2	95B 201 545 C	Fuel line		1	
(2)	95B 201 545 F	Fuel line		1	
(2)	95B 201 545 G	Fuel line		1	
(2)	95B 201 545 H	Fuel line with Spacer		1	
3	95B 201 903	Fuel hose		1	
4	N 909 865 01	Hose clamp		2	
5	95B 201 583	Connector		1	
6	95B 201 991 A	Vent line		1	
7	95B 261 191 G	Fuel line		1	I9M1/9M9
8	8K0 201 190 H	Fastening clamp		2	I9M1/9M9
(8)		Fastening clamp		6	I9M0
9	8R0 201 449 B	Fastening clamp		1	
10	8K0 201 190 F	Fastening clamp		4	I9M1/9M9
11	958 110 722 40	Spacer		1	
12	8R0 201 192 B	Cover		1	
13	N 104 065 05	Oval-head screw M 6 X 12		3	
14	4D0 201 834 C	Cap		1	
15	N 105 195 01	Spacer		1	

Illustration: 201-30

PORSCHE

Model: 95B **Model life 2014>>**

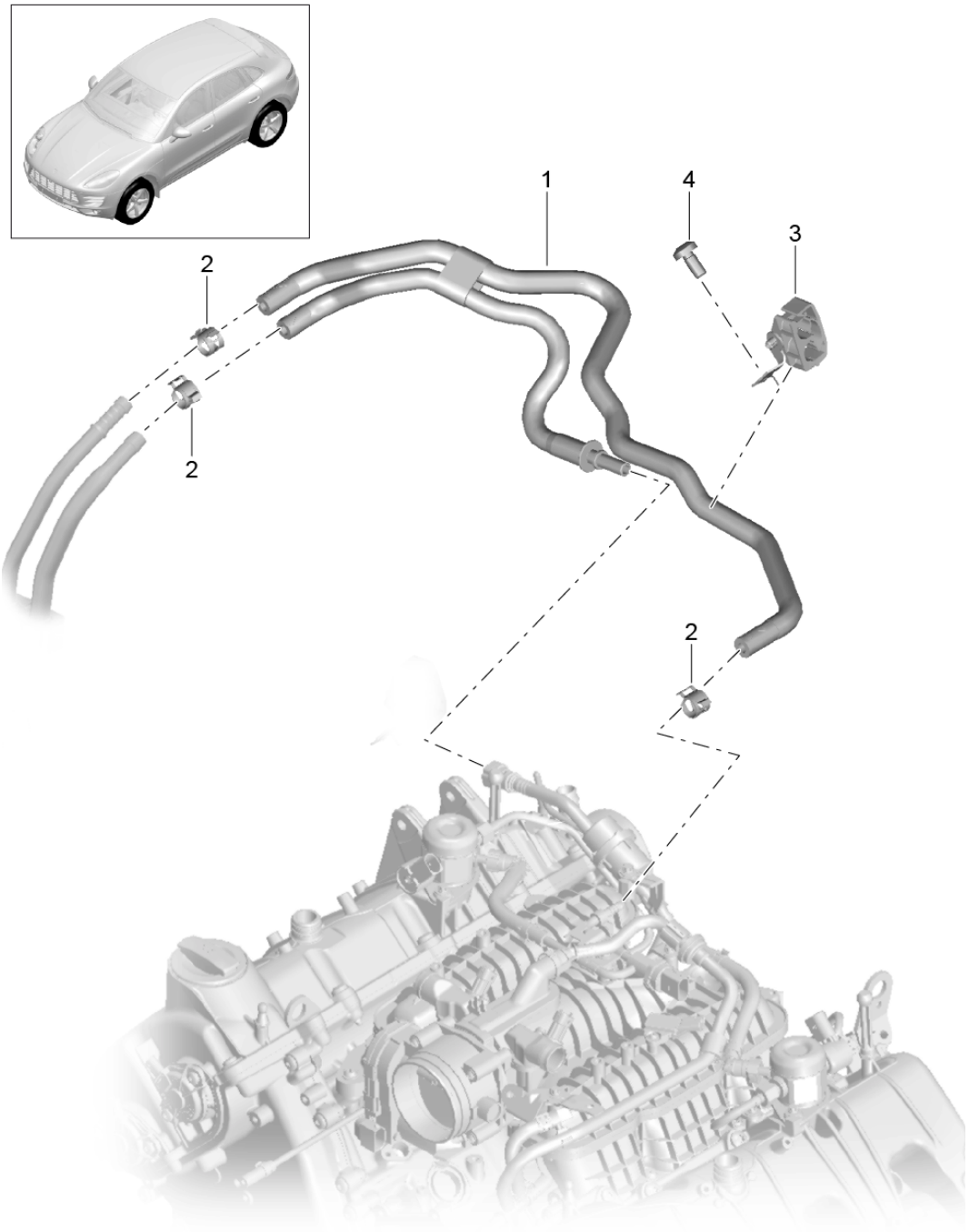

Model: 95B **Model life 2014>>**

Pos	Part Number	Description	Remark	Qty	Model
		Fuel system			MCT.LA/MA MDC.NA
		Fuel line Engine compartment			
1	95B 130 295 A	Fuel line Complete		1	
(1)	95B 130 295 B	Fuel line Complete		1	
(1)	95B 130 295 C	Fuel line Complete		1	
(1)	95B 130 295 D	Fuel line Complete Use also: N .909.865.01		1 3	
2	N 906 867 01	Hose clamp B 14 X 12		3	
(2)	N 909 865 01	Hose clamp B 14,5 X 12		3	
3	95B 133 095	Support Fuel line	-14	1	
(3)	95B 133 095 A	Support Fuel line	15-	1	
4	N 103 352 07	Round head screw M 6 X 12		1	

Illustration: 201-35

PORSCHE

Model: 95B **Model life 2014>>**

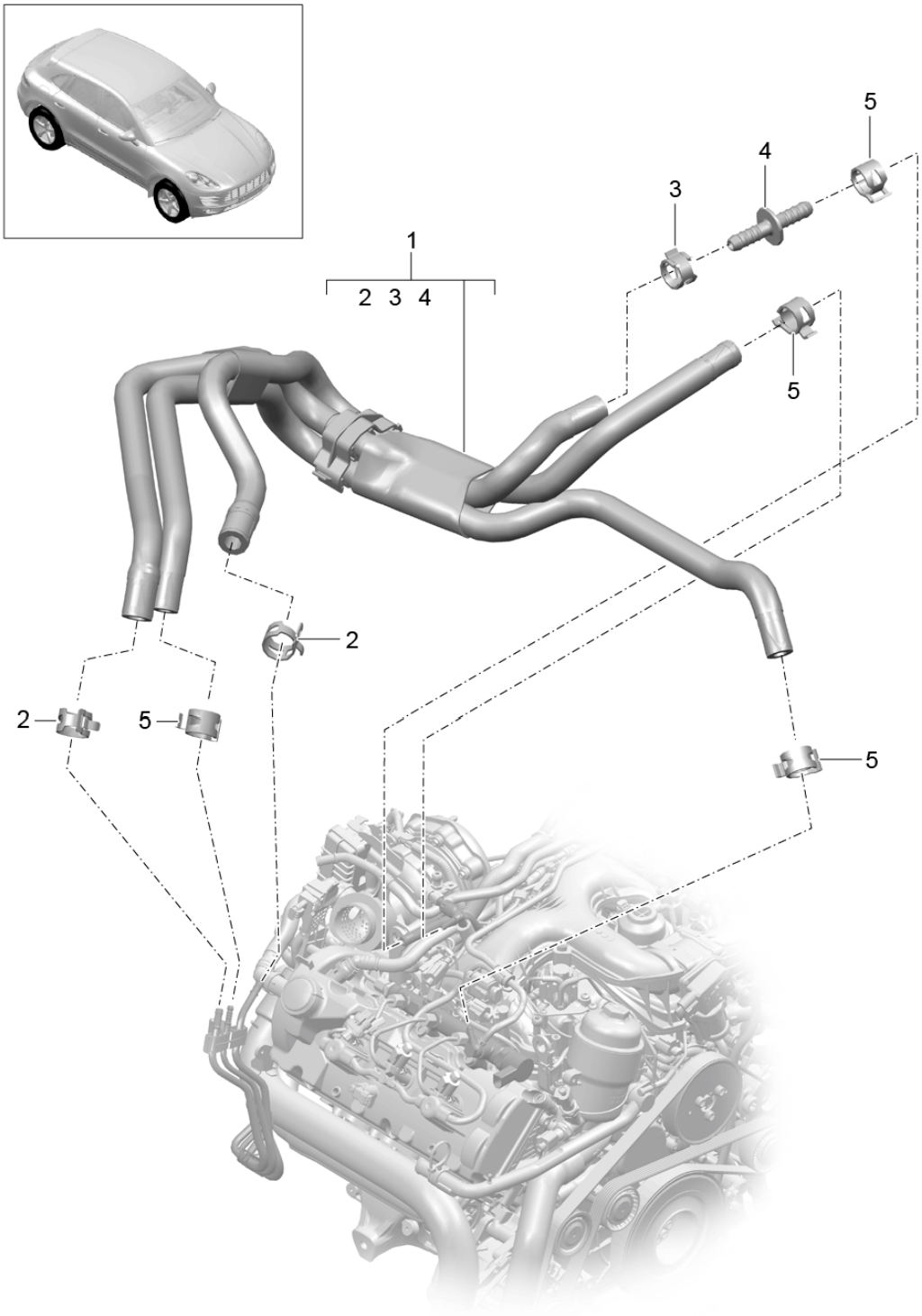

Illustration: 201-35

PORSCHE

Model: 95B **Model life 2014>>**

Pos	Part Number	Description	Remark	Qty	Model
		Fuel system			MCD.UD MCT.BA/BB/BC
		Fuel line Engine compartment			
1	95B 201 214 A	Fuel line Complete		1	
2	955 201 479 00	Hose clamp 16 X 12		2	
3	N 910 203 01	Hose clamp C 14,5 X 12		1	
4	958 110 539 00	Double socket		1	
5	N 909 865 01	Hose clamp B 14,5 X 12		4	

Illustration: 201-40

PORSCHE

Model: 95B **Model life 2014>>**

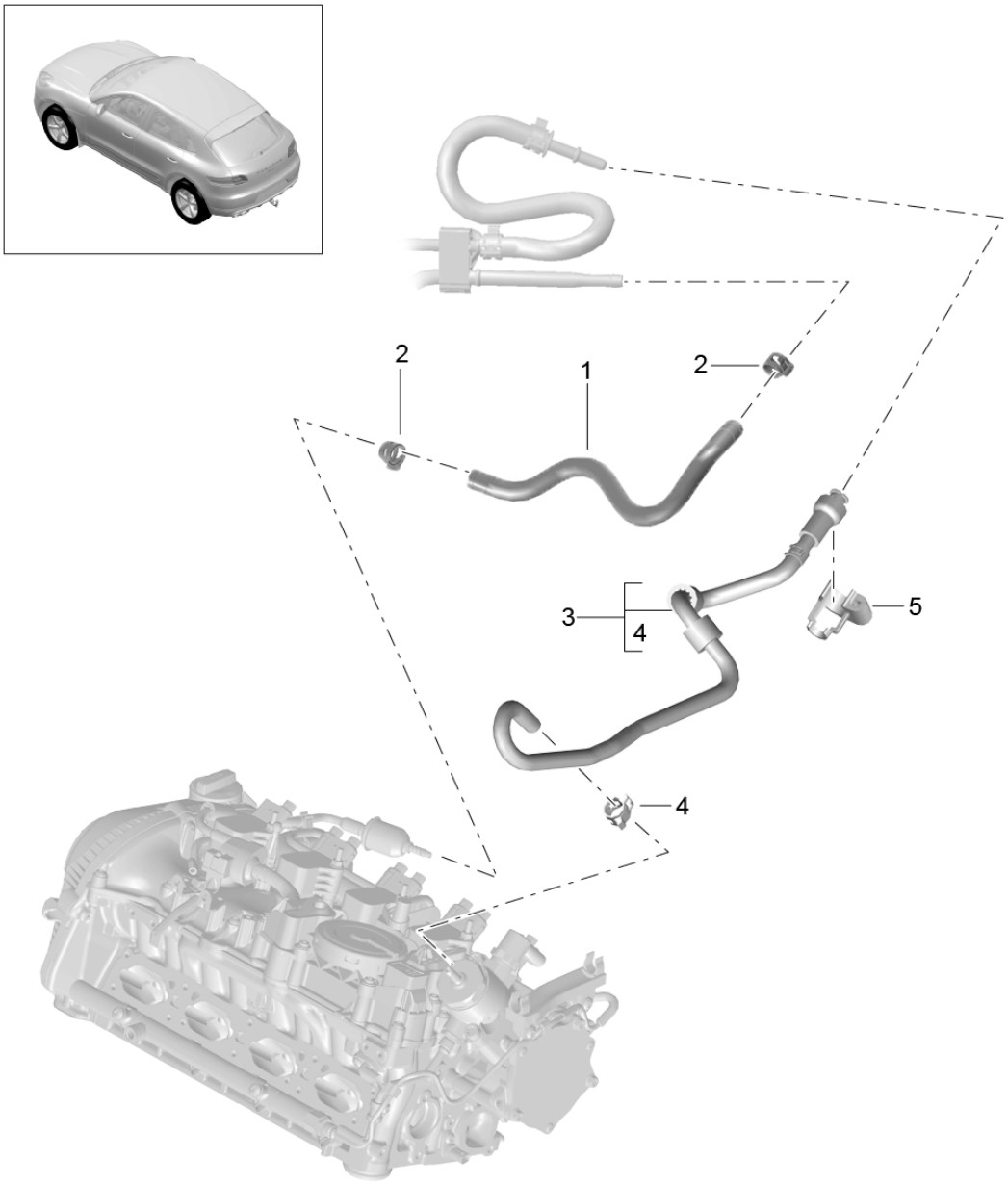

Illustration: 201-40

PORSCHE

Model: 95B **Model life 2014>>**

Pos	Part Number	Description	Remark	Qty	Model
		Fuel system			MCN.CC MCY.NA/NB/PA
		Fuel line			
		Engine compartment			
1	8K0 201 994 BB	Breather hose		1	
2	N 909 865 01	Hose clamp B 14,5 X 12		2	
3	958 133 986 20	Fuel line		1	
4	N 909 865 01	Hose clamp B 14,5 X 12		1	
5	95B 201 449 A	Support		1	

Illustration: 201-50

PORSCHE

Model: 95B **Model life 2014>>**

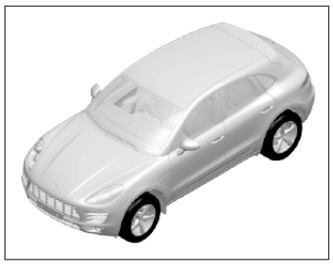

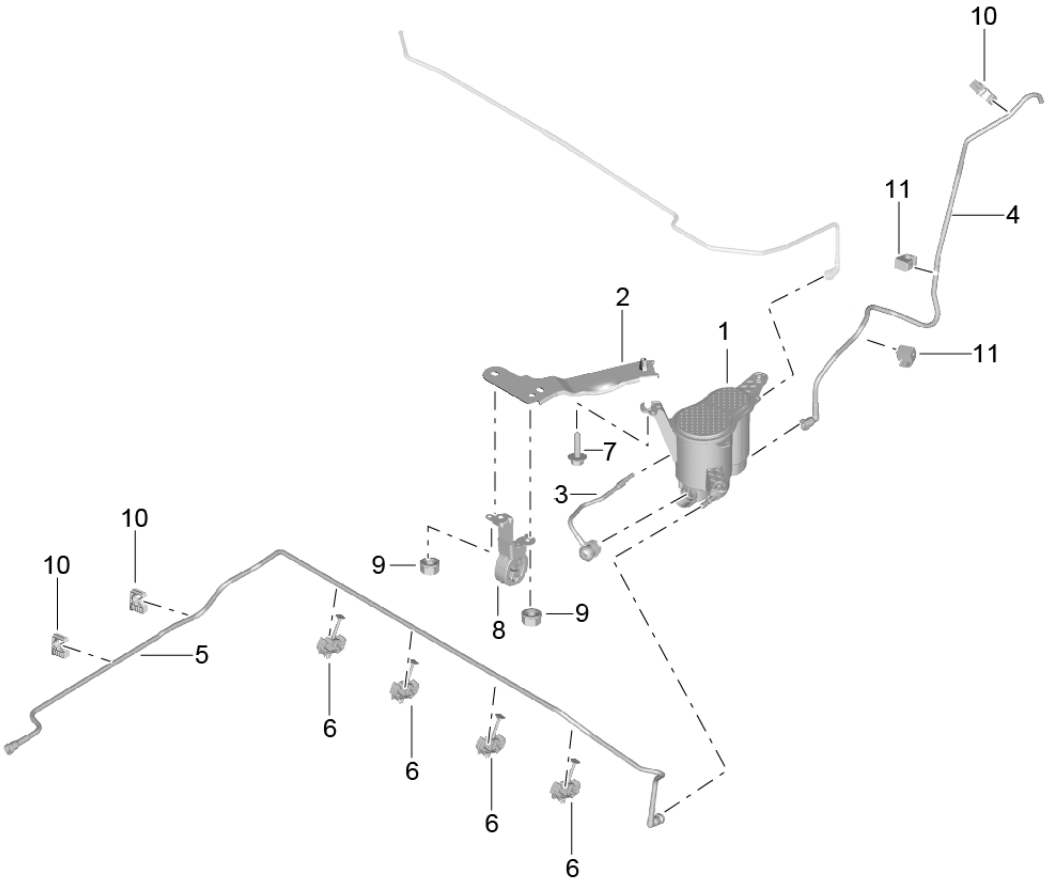

Model: 95B **Model life 2014>>**

Pos	Part Number	Description	Remark	Qty	Model
		Carbon canister			MCN.CC MCT.LA/MA MCY.NA/PA I2G1 MCY.NB MDC.NA I2G1
1	8K0 201 801 B	Carbon canister		1	
(1)	8K0 201 799 G	Carbon canister		1	
2	8R0 201 827 D	Support		1	
3	8K0 201 160 A	Breather hose Not available Carbon canister Use		1	
4	95B 201 997	Vent line		1	
5	8R0 201 991 F	Vent line		1	
6	8K0 201 449 Q	Fastening clamp		4	
7	N 106 266 02	Hexagon-head bolt M 8 X 30		2	
8		Support See illustrations 2/02/50 POS.10		1	
9	N 103 401 03	Hexagon nut		2	
10	1H9 609 738 A	Clip		3	
11	8K0 201 449 R	Clip		2	

Illustration: 201-60

PORSCHE

Model: 95B **Model life 2014>>**

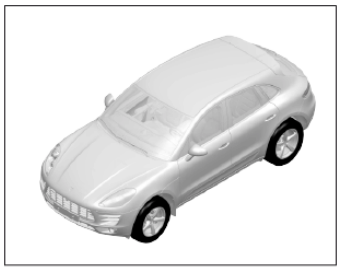

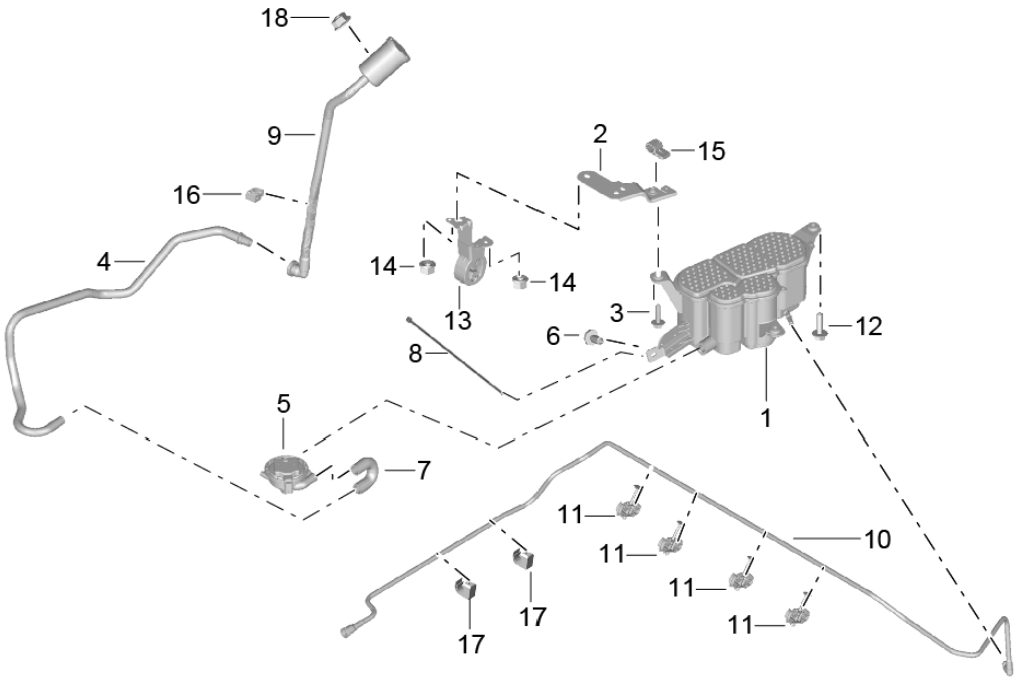

Model: 95B **Model life 2014>>**

Pos	Part Number	Description	Remark	Qty	Model
		Carbon canister			MCT.LA/MA MCY.NA/NB MDC.NA I2G4
1	8K0 201 801 C	Carbon canister		1	
2	8R0 201 827 A	Support		1	
3	N 106 266 02	Hexagon-head bolt		1	
4	8R0 201 997 K	Breather hose		1	
5	8K0 906 253 J	Pressure switch		1	
6	N 106 336 03	Oval-head sheetmetal screw		3	
7	8K0 906 272 K	Connecting hose		1	
8	N 106 478 01	Tie-wrap		1	
9	95B 201 997 A	Vent line with Filter		1	
(9)	95B 201 997 B	Vent line with Filter		1	
10	8R0 201 991 E	Vent line		1	
11	8K0 201 449 Q	Fastening clamp		4	
12	N 106 266 02	Hexagon-head bolt M 8 X 30		2	
13		Support See illustrations 2/02/50 POS.10		1	
14	N 103 401 03	Hexagon nut		2	
15	1K0 121 093 AQ	Clip		1	
16	8J0 201 449 E	Clip		2	
17	1H9 609 738 A	Clip		3	
18	N 015 082 10	Hexagon nut M 6		1	

Illustration: 201-80

Model: 95B **Model life 2014>>**

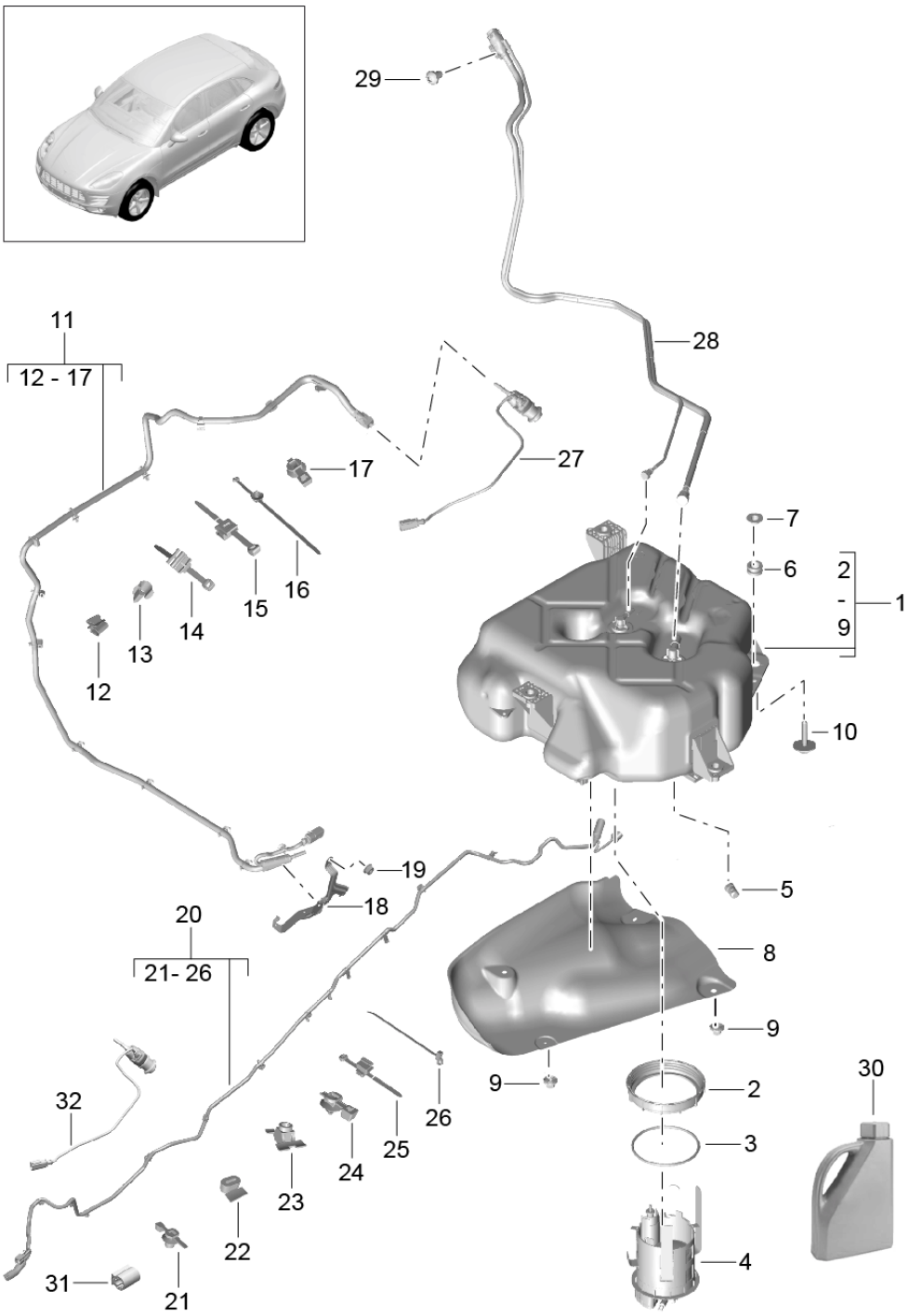

Model: 95B **Model life 2014>>**

Pos	Part Number	Description	Remark	Qty	Model
		Emission control			MCT.BA/BB/BC I1E9/2G0
1	8R0 131 877 N	Container Urea solution		1	
2	8R0 131 975	Lid		1	
3	8K0 131 357	Gasket		1	
4	8R0 131 969 C	Pump Urea solution		1	
5	4G0 201 834	Cap		1	
6	8R0 201 840	Bearing		4	
7	8R0 201 693 A	Bush		4	
8	8R0 201 308 C	Heat protection		1	
9	8E0 825 265 C	Plastic nut Heat protection		4	
10	N 911 591 01	Combination screw M8 X40		4	
11	95B 131 984	Line Urea solution		1	MCT.BA/BB/BC
12	95B 131 842	Cable terminal 13,00 - 14,00		1	MCT.BA/BB/BC
13	6Q0 971 842 A	Cable terminal 12,00		1	MCT.BA/BB/BC
14	8E0 971 818 A	Tie-wrap 207,00 X 5,00		3	MCT.BA/BB/BC
15	3D0 971 497 D	Tie-wrap 207,00 X 5,00		1	MCT.BA/BB/BC
16	N 106 461 01	Tie-wrap 4,60 X 143,00		7	MCT.BA/BB/BC
17	N 906 661 01	Tie-wrap 4,60 X 200,00		5	MCT.BA/BB/BC
18	059 131 561 G	Support Line	-16	1	MCT.BA/BB/BC
19	N 106 092 01	Hexagon nut M8		2	MCT.BA/BB/BC
20	8R0 131 984 P	Line Urea solution	-16	1	MCT.BA/BB/BC
(20)	95B 131 984 C	Line Urea solution	17-	1	MCT.BA/BB/BC
21	6H0 957 818	Tie-wrap 8,00 X 200,00		1	MCT.BA/BB/BC
22	6Q0 971 838 C	Tie-wrap 193,00 X 4,60 X 5,00		3	
23	958 612 854 00	Tie-wrap 193,00 X 4,60 X 5,00		1	
24	N 906 661 01	Tie-wrap 4,60 X 200,00		5	MCT.BA/BB/BC
25		Tie-wrap To Use POS.20		1	
26	8D0 971 850 G	Tie-wrap 210,00 X 4,70		1	
27		Injector valve Urea solution See illustrations 2/02/35 POS.10		1	MCT.BA/BB/BC
28	8R0 131 963 C	Line Urea solution		1	
29	N 104 840 02	Round head screw M 5 X 7		2	
30	958 113 510 00	AdBlue Urea solution		X	

Model: 95B **Model life 2014>>**

Pos	Part Number	Description	Remark	Qty	Model
		Container 1890 ML			
(30)	958 113 510 10	AdBlue Urea solution Container 10 LITER Only To Use with Special tools VAS 6542/1 And VAG 1383/1		X	
(30)	9A7 052 910 00	AdBlue Urea solution Container 200 litres		X	

Illustration: 202-00

PORSCHE

Model: 95B **Model life 2014>>**

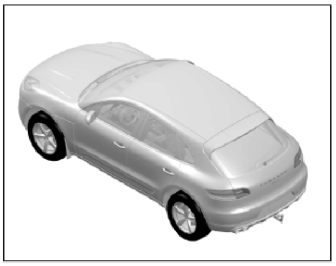

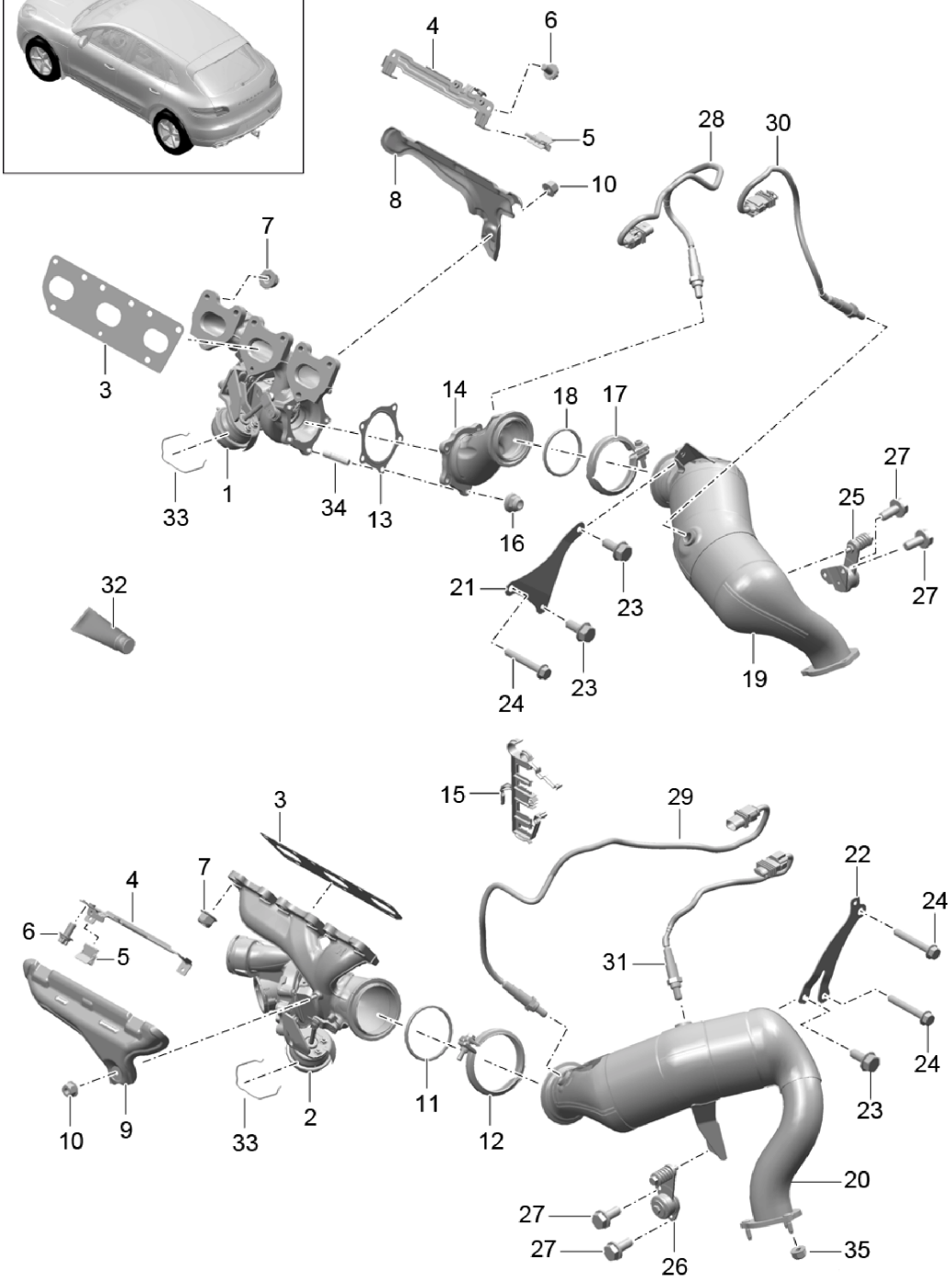

Model: 95B **Model life 2014>>**

Pos	Part Number	Description	Remark	Qty	Model
		Exhaust system			MCT.LA/MA MDC.NA
		Turbocharger Catalytic converter Oxygen sensor			
1	946 123 025 30	Turbocharger Cyl. 1 - 3		1	MCT.MA
(1)	946 123 025 31	Turbocharger Cyl. 1 - 3		1	MCT.MA MDC.NA
(1)	946 123 025 35	Turbocharger Cyl. 1 - 3		1	MCT.LA
(1)	946 123 025 36	Turbocharger Cyl. 1 - 3		1	MCT.LA
2	946 123 026 30	Turbocharger Cyl. 4 - 6		1	MCT.MA
(2)	946 123 026 31	Turbocharger Cyl. 4 - 6		1	MCT.MA MDC.NA
(2)	946 123 026 35	Turbocharger Cyl. 4 - 6		1	MCT.LA
(2)	946 123 026 36	Turbocharger Cyl. 4 - 6		1	MCT.LA
3	946 111 181 75	Gasket Exhaust manifold		2	
4	946 111 420 76	Support Heat shield		2	
5	948 111 213 00	Clamp		4	
6	900 385 041 01	Torx screw BM 6 X 12		4	
7	999 084 642 02	Hexagon nut M 8		18	
8	946 111 337 31	Heat shield Cyl. 1 - 3		1	
9	946 111 338 30	Heat shield Cyl. 4 - 6		1	
10	900 380 015 02	Hexagon nut M 6		2	
11	5Q0 253 115 B	Gasket		1	
12	5Q0 253 725 C	Clip		1	
13	95B 253 115	Gasket		1	
14	95B 253 101	Exhaust pipe Front		1	
15	95B 971 845 A	Support Line Oxygen sensor		1	
16	N 908 946 02	Hexagon nut		5	
17	95B 253 725 A	Clip		1	
(17)	95B 253 725 B	Clip		1	
18	5C0 253 115 A	Gasket		1	
19	95B 254 350	Exhaust pipe with Catalytic converter Right		1	
(19)	95B 254 350 X	Exhaust pipe with Catalytic converter Right		1	
20	95B 254 300	Exhaust pipe with Catalytic converter Left		1	

Model: 95B **Model life 2014>>**

Pos	Part Number	Description	Remark	Qty	Model
(20)	95B 254 300 X	Exhaust pipe with Catalytic converter Left		1	
21	95B 253 047 A	Support Right		1	
22	95B 253 047	Support Left		1	
23	N 106 531 02	Hexagon-head bolt M 8 X 20		3	
24		Fastening screw Support See illustrations 3/06/00 POS.4		X	
25	95B 253 230	Support		1	
26	95B 253 230 A	Support		1	
27	N 100 493 08	Hexagon-head bolt M 8 X 20		4	
28	95B 906 203 B	Oxygen sensor in front of Catalytic converter Right		1	
29	95B 906 203	Oxygen sensor in front of Catalytic converter Left		1	
30	95B 906 203 C	Oxygen sensor After Catalytic converter Right		1	
31	95B 906 203 A	Oxygen sensor After Catalytic converter Left		1	
32	000 043 207 07	Grease for oxygen sensor		X	
33	948 123 324 50	Retainer spring		4	
34	900 081 059 01	Stud M 8 X 22		5	
35	N 911 308 01	Hexagon nut M 8		3	

Illustration: 202-05

PORSCHE

Model: 95B **Model life 2014>>**

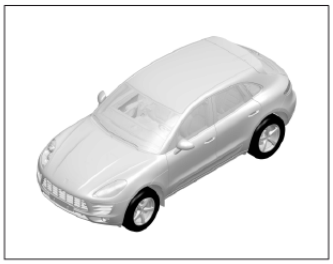

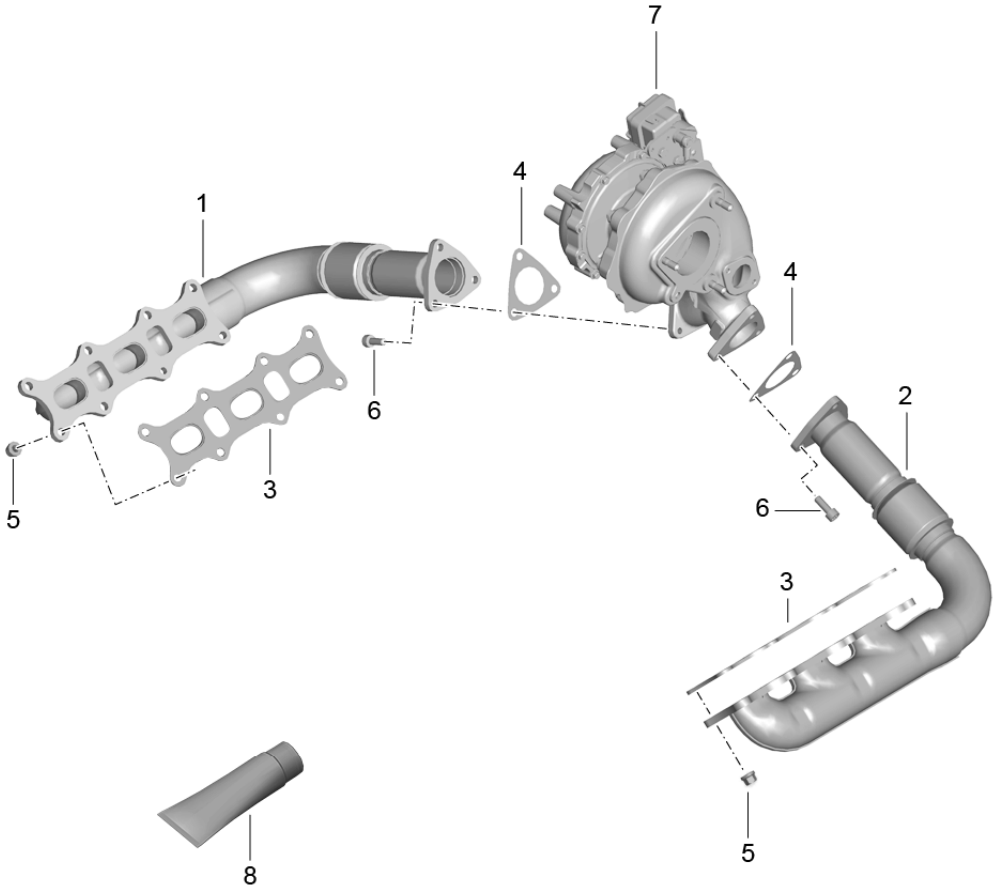

Illustration: 202-05

PORSCHE

Model: 95B **Model life 2014>>**

Pos	Part Number	Description	Remark	Qty	Model
		Exhaust system			MCD.UD MCT.BA/BB/BC
		Exhaust manifold			
1	958 111 130 21	Exhaust manifold Cyl. 1 - 3		1	
2	958 111 129 21	Exhaust manifold Cyl. 4 - 6		1	
3	958 111 181 20	Gasket		2	
4	958 111 113 30	Gasket		2	
5	N 908 946 01	Hexagon nut M 8		16	
6	N 911 878 01	Pan-head screw M 8 X 20		6	
7		Turbocharger See illustrations 2/02/25 POS.1		1	
8	000 043 207 47	Grease 1 tube 170 GR.		1	

Illustration: 202-20

PORSCHE

Model: 95B **Model life 2014>>**

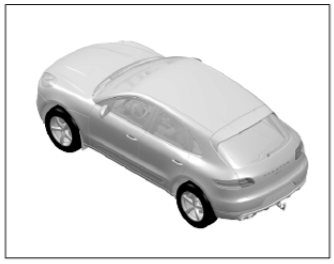

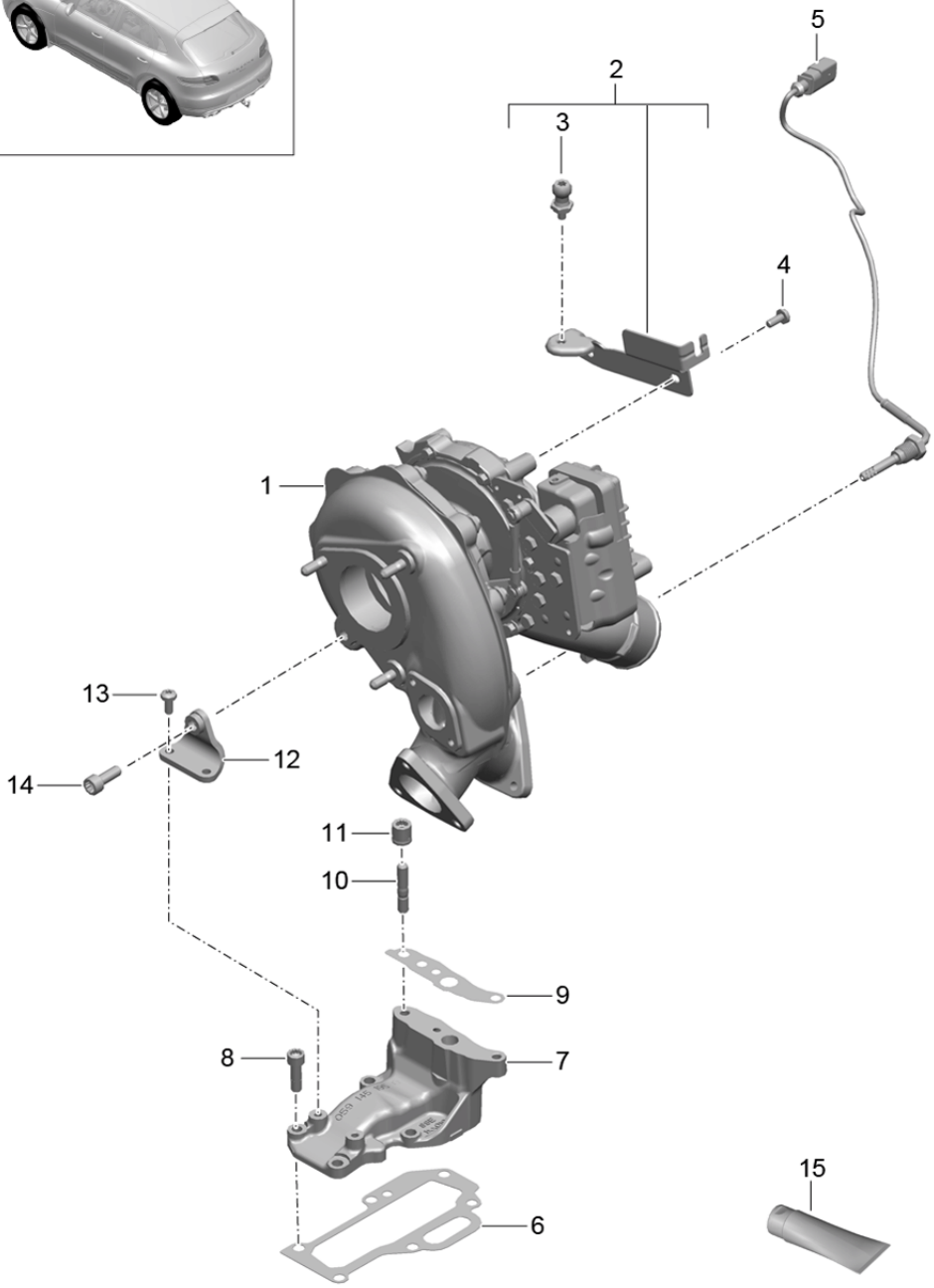

Illustration: 202-20

PORSCHE

Model: 95B **Model life 2014>>**

Pos	Part Number	Description	Remark	Qty	Model
		Turbocharger			MCD.UD MCT.BA/BB/BC
1	958 123 025 11	Turbocharger		1	
2	958 110 357 00	Support Engine cover		1	
3	WHT 000 351	Ball pin M 6		1	
4	N 104 056 04	Oval-head screw M 6 X 14		2	
5	958 606 688 31	Temperature sensor Turbocharger		1	MCD.UD
(5)	958 606 688 70	Temperature sensor Turbocharger		1	MCT.BA/BB/BC
6	958 123 547 00	Gasket		1	
7	958 123 121 00	Support		1	
8	N 910 059 02	Pan-head screw M 8 X 25		6	
9	958 123 557 00	Gasket		1	
10	N 044 511 3	Stud M 8 X 18		2	
11	WHT 005 491	Collar nut M 8		2	
12	958 123 122 00	Support		1	
13	N 104 056 04	Oval-head screw M 6 X 14		2	
14	N 910 461 01	Pan-head screw M 8 X 22		1	
15	000 043 207 47	Grease 1 tube 170 GR.		X	

Illustration: 202-30

PORSCHE

Model: 95B **Model life 2014>>**

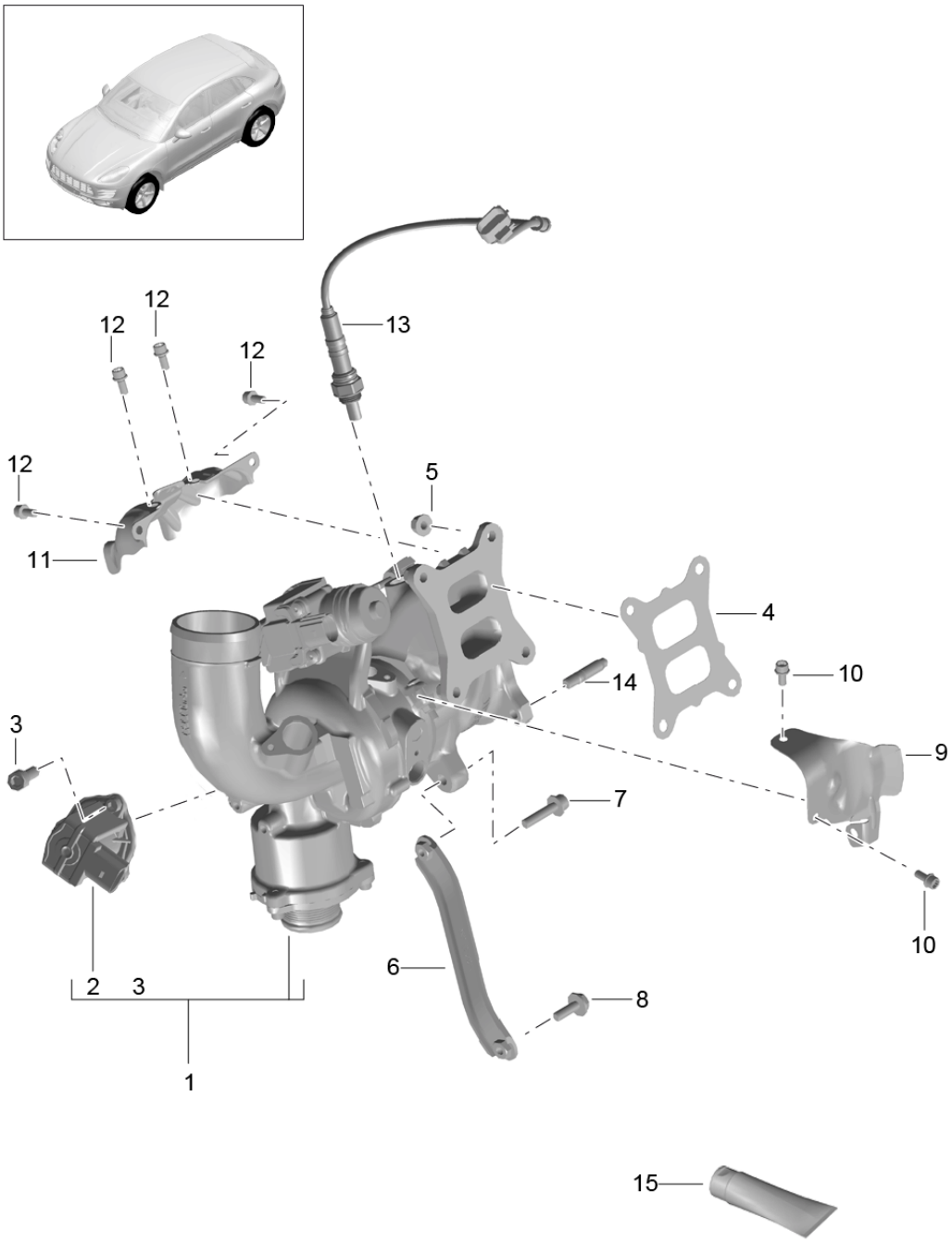

Illustration: 202-30

PORSCHE

Model: 95B **Model life 2014>>**

Pos	Part Number	Description	Remark	Qty	Model
		Turbocharger			MCN.CC MCY.NA/NB/PA
1	958 145 702 00	Turbocharger with Electric motor		1	
(1)	958 145 702 10	Turbocharger with Electric motor		1	
2	958 145 710 00	Shut-off valve		1	
3	N 014 740 11	Pan-head screw M 6 X 16		3	
4	958 253 039 00	Gasket Exhaust manifold		1	
5	WHT 007 210	Hexagon nut M 8		4	
6	958 145 536 00	Support		1	
7	N 911 037 01	Pan-head screw M 8 X 35		1	
8	N 906 439 07	Combination screw M 8 X 25		1	
9	958 129 598 00	Heat protection		1	
10	N 106 192 01	Combination screw M 6 X 15		2	
11	958 129 597 00	Heat shield		1	
12	N 101 148 06	Combination screw M 6 X 15		4	
13	958 906 262 00	Oxygen sensor		1	
14	N 107 320 01	Torx screw M 6 X 14		4	
(14)	N 107 302 01	Stud M 10 X 32		4	
15	000 043 207 47	Grease 1 tube 170 GR.		X	

Illustration: 202-35

PORSCHE

Model: 95B **Model life 2014>>**

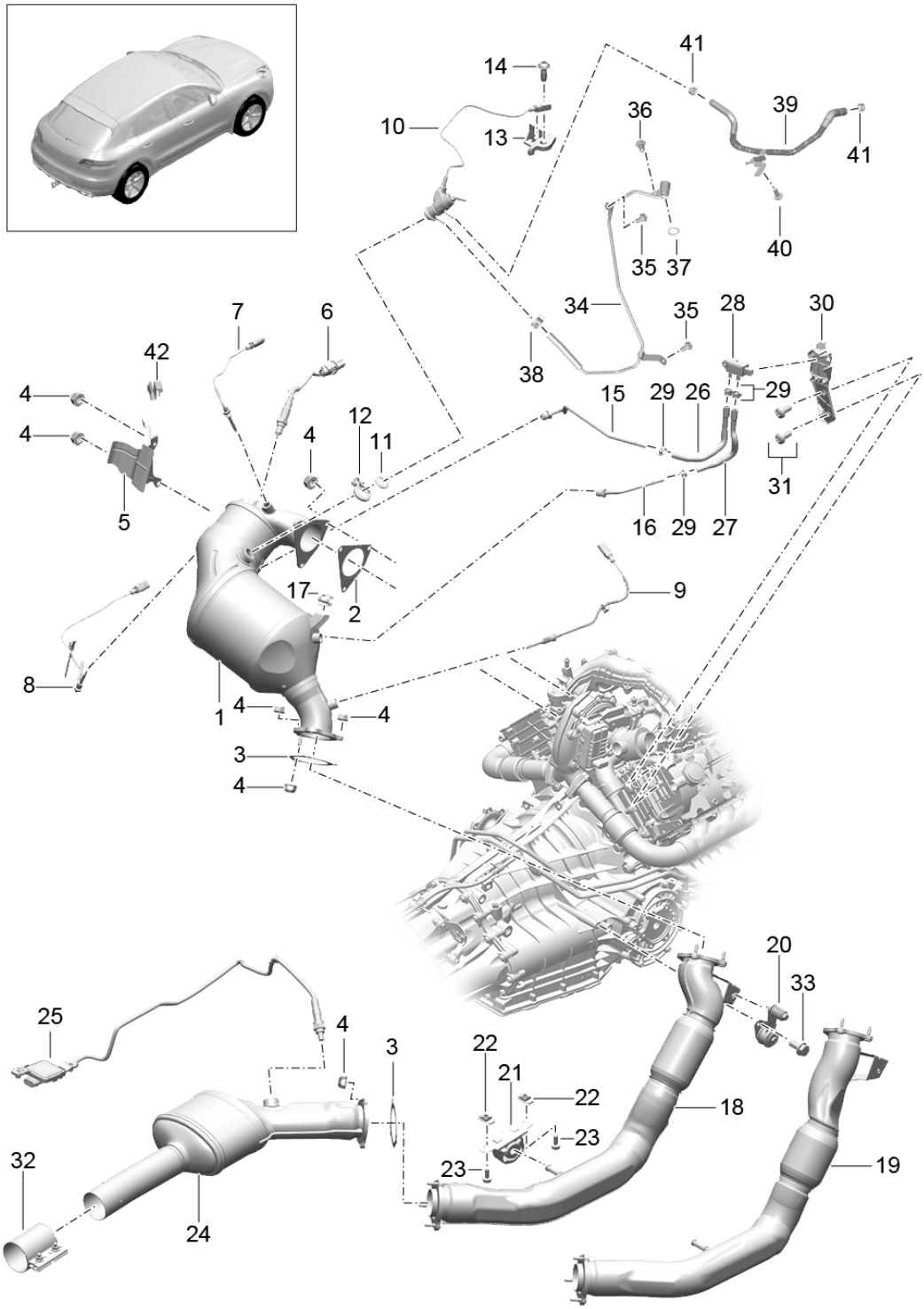

Model: 95B **Model life 2014>>**

Pos	Part Number	Description	Remark	Qty	Model
		Exhaust system			MCT.BA/BB/BC
		Exhaust pipe			
		with			
		Catalytic converter			
		Diesel particle filter			
		Control line			
1	4H0 254 750 D	Diesel particle filter		1	
(1)	4H0 254 750 X	Diesel particle filter		1	
2	958 111 113 20	Gasket		1	
3	8K0 253 115 J	Gasket		2	
4	N 911 308 02	Hexagon nut		11	
		M 8			
5	4H0 131 783 J	Heat shield		1	
6	070 906 262 B	Oxygen sensor		1	
		in front of			
		Particle filter			
7	4H0 906 088 AA	Temperature sensor		1	
		in front of			
		Particle filter			
8	4H0 906 088 AG	Temperature sensor		1	
		Particle filter			
9	4H0 906 088 AB	Temperature sensor		1	
		After			
		Particle filter			
10	4H0 131 113 D	Injector valve		1	
		Urea solution			
		Use also:			
		04L.253.725.A		1	
11	04L 253 115	Gasket		1	
12	04L 253 725 A	Clip		1	
13	4H0 131 713 E	Support		1	
		Line			
		Injector valve			
14	N 107 214 01	Oval-head screw		1	
		TP 6 X 16			
15	4G0 131 205 C	Pressure line		1	
		Front			
16	4G0 131 205 G	Pressure line		1	
		Rear			
17	8E0 131 545	Cable clip		1	
		8,0			
18	4G0 253 350 B	Exhaust pipe		1	IL0L
		Front			
19	8R0 253 350	Exhaust pipe		1	IL0R
		Front			
20	95B 253 230	Support		1	
21	4H0 253 099	Support		1	
22	4H0 821 213	Clip		2	
23	N 107 367 01	Pan-head screw		2	
		M 8 X 20			
24	8R0 254 400	Catalytic converter		1	
(24)	8R0 254 400 X	Catalytic converter		1	
25	8R0 907 807 E	Control unit		1	
		with			
		Sensor			
26	4H0 131 850 G	Hose		1	
27	4H0 131 850 H	Hose		1	
28	059 906 051 F	Pressure sensor		1	
29	958 111 483 10	Clamp		4	
		B 13,5 X 12			
30	059 971 362 D	Support		1	
		Pressure sensor			
31	N 104 056 04	Oval-head screw		2	

Model: 95B **Model life 2014>>**

Pos	Part Number	Description	Remark	Qty	Model
		M 6 X 14			
32	958 111 220 10	Clamping sleeve 65 MM		1	
33	N 100 493 08	Hexagon-head bolt M 6 X 20		2	
34	958 106 027 03	Water line Supply Injector valve		1	
35	N 104 056 04	Oval-head screw M 6 X 14		2	
36	N 101 703 02	Oval-head screw M 6 X 10		1	
37	N 907 834 02	O-ring 13,1 X 1,6		1	
38	N 107 160 01	Clip B 12,5 X 8,4		1	
39	958 106 235 01	Water line Return line Injector valve		1	
40	N 106 216 02	Torx screw M 4 X 12		1	
41	999 512 650 09	Hose clamp B 14 X 12		2	
42	811 971 848 B	Cable terminal Heat shield		1	

Illustration: 202-40

PORSCHE

Model: 95B **Model life 2014>>**

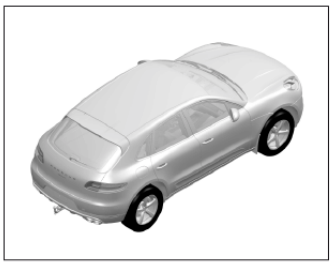

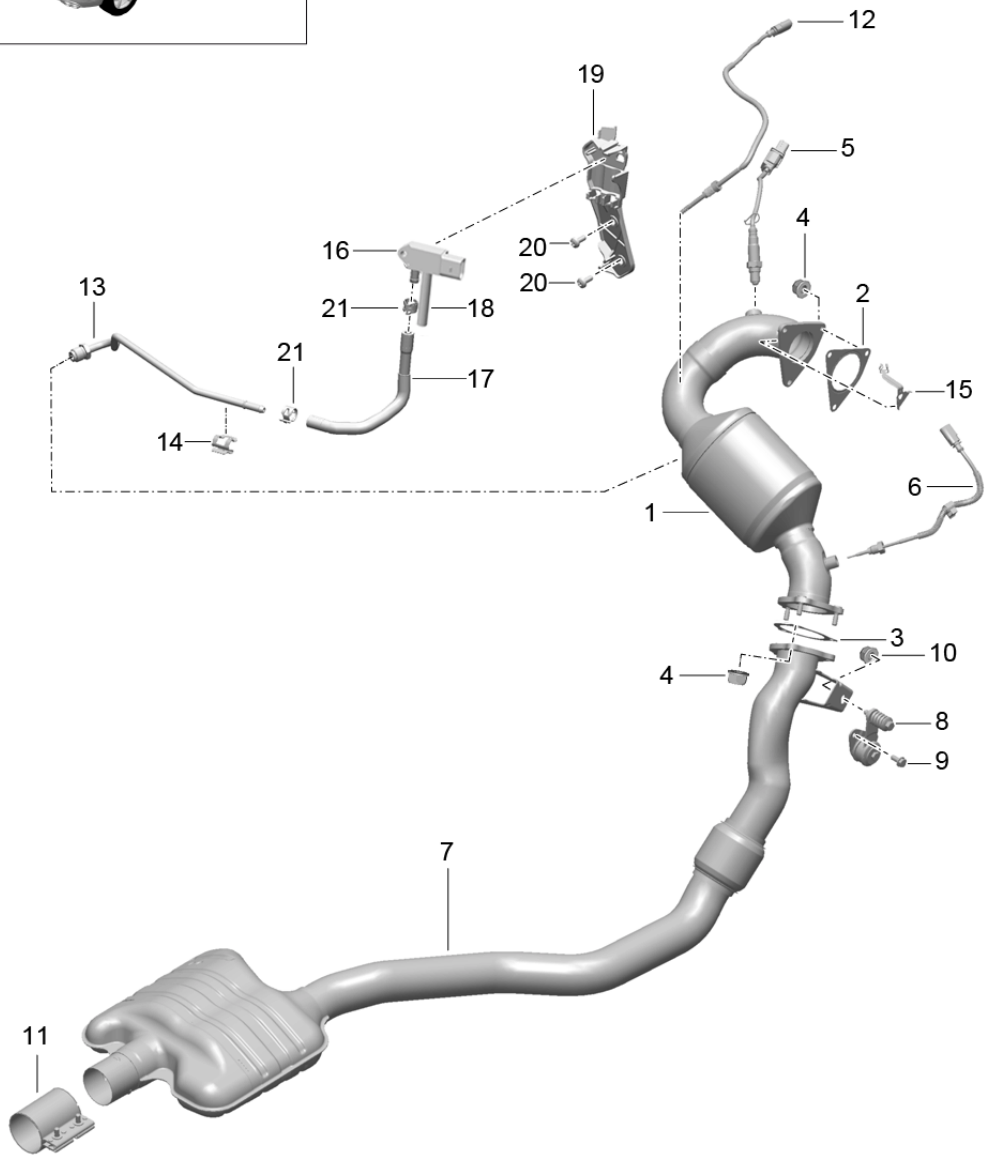

Model: 95B **Model life 2014>>**

Pos	Part Number	Description	Remark	Qty	Model
		Exhaust system			MCD.UD
		Exhaust pipe			
		with			
		Catalytic converter			
		Diesel particle filter			
		Control line			
1	4G0 254 250 N	Catalytic converter		1	I0GG
(1)	4G0 254 250 X	Catalytic converter		1	I0GG
(1)	958 254 750 00	Diesel particle filter		1	I7HI
(1)	958 254 750 X	Diesel particle filter		1	I7HI
2	958 111 113 20	Gasket		1	
3	8K0 253 115 J	Gasket		1	
4	N 911 308 02	Hexagon nut		6	
		M 8			
5	070 906 262 B	Oxygen sensor		1	
		in front of			
		Catalytic converter			
6	4H0 906 088 AA	Temperature sensor		1	
		After			
		Catalytic converter			
(6)	958 906 088 10	Temperature sensor		1	I0GG
		After			
		Catalytic converter			
(6)	958 906 088 20	Temperature sensor		1	I7HI
		After			
		Catalytic converter			
7	8K0 253 102 M	Front muffler		1	I0GG
(7)	958 253 102 00	Front muffler		1	I7HI
8	95B 253 230	Support		1	
9	N 100 493 08	Hexagon-head bolt		2	
		M 8 X 20			
10	N 023 003 16	Hexagon nut		1	
		M 8			
11	958 111 220 10	Clamping sleeve		1	
		65 MM			
12	958 906 088 30	Temperature sensor		1	I7HI
		in front of			
		Catalytic converter			
13	4G0 131 205 C	Pressure line		1	I7HI
		Front			
14	8E0 131 545	Cable clip		1	I7HI
		Pressure line			
15	958 971 843 00	Cable holder		1	I7HI
		Temperature sensor			
		in front of			
		Catalytic converter			
16	958 606 151 10	Pressure sensor		1	I7HI
17	958 131 850 00	Hose		1	I7HI
		Pressure line			
18	N 910 960 34	Hose		1	I7HI
		5 X 2,5			
19	958 971 362 00	Support		1	I7HI
		Pressure sensor			
20	N 104 056 04	Oval-head screw		2	I7HI
		M 6 X 14			
21	958 111 483 10	Clamp		2	I7HI
		B 13,5 X 12			

Illustration: 202-45

PORSCHE

Model: 95B **Model life 2014>>**

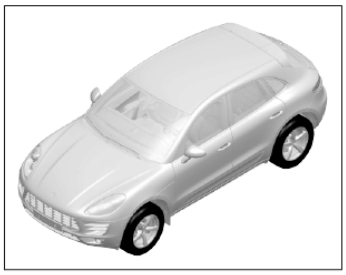

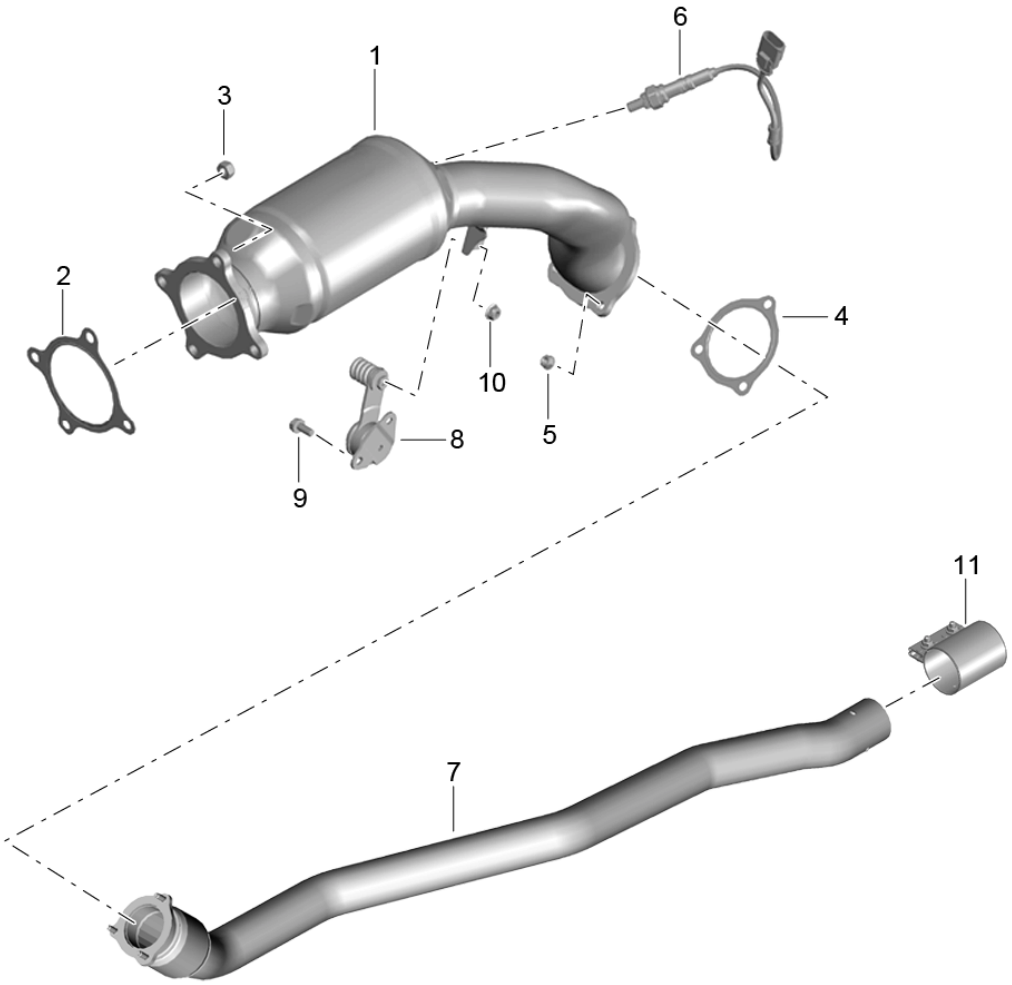

Illustration: 202-45

PORSCHE

Model: 95B **Model life 2014>>**

Pos	Part Number	Description	Remark	Qty	Model
		Exhaust system			MCN.CC MCY.NA/NB/PA
		Exhaust pipe Catalytic converter			
1	8K0 254 253 D	Catalytic converter		1	MCN.CC MCY.PA
(1)	8K0 254 253 X	Catalytic converter		1	MCN.CC MCY.PA
(1)	8K0 254 253 K	Catalytic converter		1	MCY.NA/NB
(1)	8K0 254 253 AX	Catalytic converter		1	MCY.NA/NB
2	8K0 253 115 L	Gasket		1	
3	N 102 090 07	Lock nut M 10		4	
4	8K0 253 115 J	Gasket		1	
5	N 911 308 02	Hexagon nut M 8		6	
6	8K0 906 262 G	Oxygen sensor After Catalytic converter		1	
7	95B 253 209 B	Front muffler		1	
8	95B 253 230	Support		1	
9	N 100 493 08	Hexagon-head bolt M 8 X 20		2	
10	N 023 003 16	Hexagon nut M 8		1	
11	958 111 220 10	Clamping sleeve 65 MM		1	

Illustration: 202-50

PORSCHE

Model: 95B **Model life 2014>>**

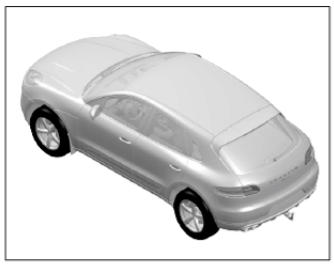

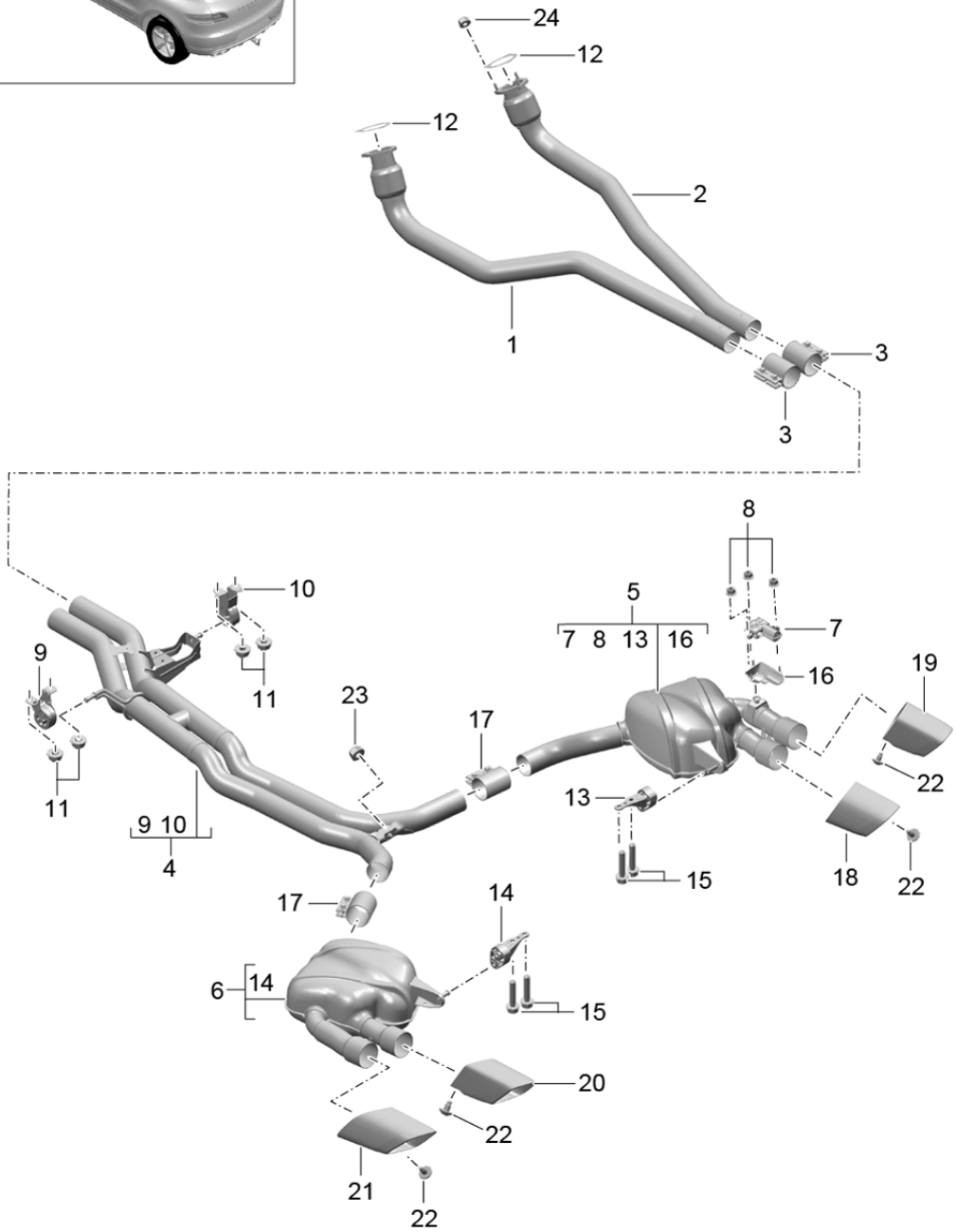

Model: 95B **Model life 2014>>**

Pos	Part Number	Description	Remark	Qty	Model
		Exhaust system			MCT.LA/MA MDC.NA
		Front muffler			
		Rear muffler			
1	95B 253 533	Exhaust pipe		1	
(1)	95B 253 533 E	Exhaust pipe		1	
2	95B 253 533 A	Exhaust pipe		1	
(2)	95B 253 533 F	Exhaust pipe		1	
3	958 111 220 10	Clamping sleeve		2	
4	95B 253 487 Y	Exhaust pipe		1	
5	95B 253 612 AY	Rear muffler without Tail pipe	/R	1	MCT.MA
(5)	95B 253 612 Y	Rear muffler without Tail pipe	/R	1	MCT.LA
(5)	95B 253 612 FY	Rear muffler without Tail pipe	/R	1	MCT.LA/MA MDC.NA I0P8/0P9
6	95B 253 611 AY	Rear muffler without Tail pipe	/L	1	MCT.MA I0P0/0P3/0P6
(6)	95B 253 611 Y	Rear muffler without Tail pipe	/L	1	MCT.LA I0P0/0P3/0P6
(6)	95B 253 611 FY	Rear muffler without Tail pipe	/L	1	MCT.LA/MA MDC.NA I0P8/0P9
7	8R0 133 246	Electric motor		1	MCT.LA/MA I0P0
(7)	8R0 133 246 A	Electric motor		1	MCT.LA/MA I0P0
(7)		Electric motor		2	MCT.LA/MA MDC.NA I0P8/0P9
8	N 105 972 01	Hexagon nut M 5		3	MCT.LA/MA I0P0
(8)		Hexagon nut M 5		6	MCT.LA/MA MDC.NA I0P8/0P9
9	8K0 253 144 F	Support		1	
10	8K0 253 144 E	Support		1	
11	N 023 003 16	Hexagon nut M 8		4	
12	8K0 253 115 J	Gasket		2	
13	8R0 253 144 C	Support		1	
(13)	95B 253 144 A	Support		1	
14	8R0 253 144 B	Support		1	
(14)	95B 253 144	Support		1	
15	N 106 620 01	Hexagon-head bolt M 8 X 40		4	
16	4H0 253 233	Heat shield Electric motor		1	

Model: 95B **Model life 2014>>**

Pos	Part Number	Description	Remark	Qty	Model
(16)		Heat shield		2	MCT.LA/MA MDC.NA I0P8/0P9
17	958 111 220 10	Electric motor Clamping sleeve 65		2	
18	95B 253 682 C	Tail pipe	/R	1	MCT.MA I0P0
(18)	95B 253 682 E	Inner Tail pipe	/R	1	MCT.LA I0P0
(18)	95B 253 682 M	Inner Tail pipe	/R	2	MCT.MA I0P6
(18)	95B 253 682 L	Tail pipe	/R	2	MCT.MA I0P3
(18)	95B 253 682 Q	Tail pipe	/R	1	MCT.LA/MA MDC.NA I0P9
(18)		Inner Tail pipe	/R	1	MCT.LA I0P6
(18)	95B 253 682 N	Inner Tail pipe	/R	1	MCT.LA I0P3
(18)		Inner Tail pipe	/R	1	MCT.LA/MA I0P8
19	95B 253 682 D	Inner Tail pipe	/R	1	MCT.MA I0P0
(19)	95B 253 682 F	Outer Tail pipe	/R	1	MCT.LA I0P0
(19)	95B 253 682 R	Outer Tail pipe	/R	1	MCT.LA I0P6
(19)		Outer Tail pipe	/R	1	MCT.LA/MA MDC.NA I0P9
(19)	95B 253 682 P	Outer Tail pipe	/R	1	MCT.LA I0P3
(19)		Outer Tail pipe	/R	1	MCT.LA/MA I0P8
20	95B 253 681 C	Outer Tail pipe	/L	1	MCT.MA I0P0
(20)	95B 253 681 E	Inner Tail pipe	/L	1	MCT.LA I0P0
(20)	95B 253 681 M	Inner Tail pipe	/L	2	MCT.MA I0P6
(20)	95B 253 681 L	Tail pipe	/L	2	MCT.MA I0P3
(20)	95B 253 681 Q	Tail pipe	/L	1	MCT.LA I0P6
(20)		Inner Tail pipe	/L	1	MCT.LA/MA MDC.NA

Model: 95B **Model life 2014>>**

Pos	Part Number	Description	Remark	Qty	Model
					I0P9
(20)	95B 253 681 N	Inner Tail pipe	/L	1	MCT.LA I0P3
(20)		Inner Tail pipe	/L	1	MCT.LA/MA I0P8
21	95B 253 681 D	Inner Tail pipe	/L	1	MCT.MA I0P0
(21)	95B 253 681 F	Outer Tail pipe	/L	1	MCT.LA I0P0
(21)	95B 253 681 R	Outer Tail pipe	/L	1	MCT.LA I0P6
(21)		Outer Tail pipe	/L	1	MCT.LA/MA MDC.NA I0P9
(21)	95B 253 681 P	Outer Tail pipe	/L	1	MCT.LA I0P3
(21)		Outer Tail pipe	/L	1	MCT.LA/MA I0P8
22	999 073 594 01	Outer Lens-head screw M 6 X 12		4	
23	N 911 308 02	Hexagon nut M 8		1	
24	N 911 308 01	Hexagon nut M 8		3	

Illustration: 202-55

PORSCHE

Model: 95B **Model life 2014>>**

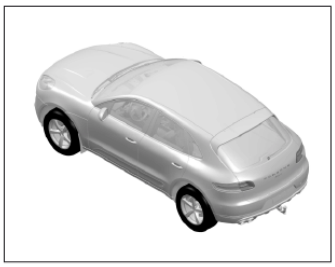

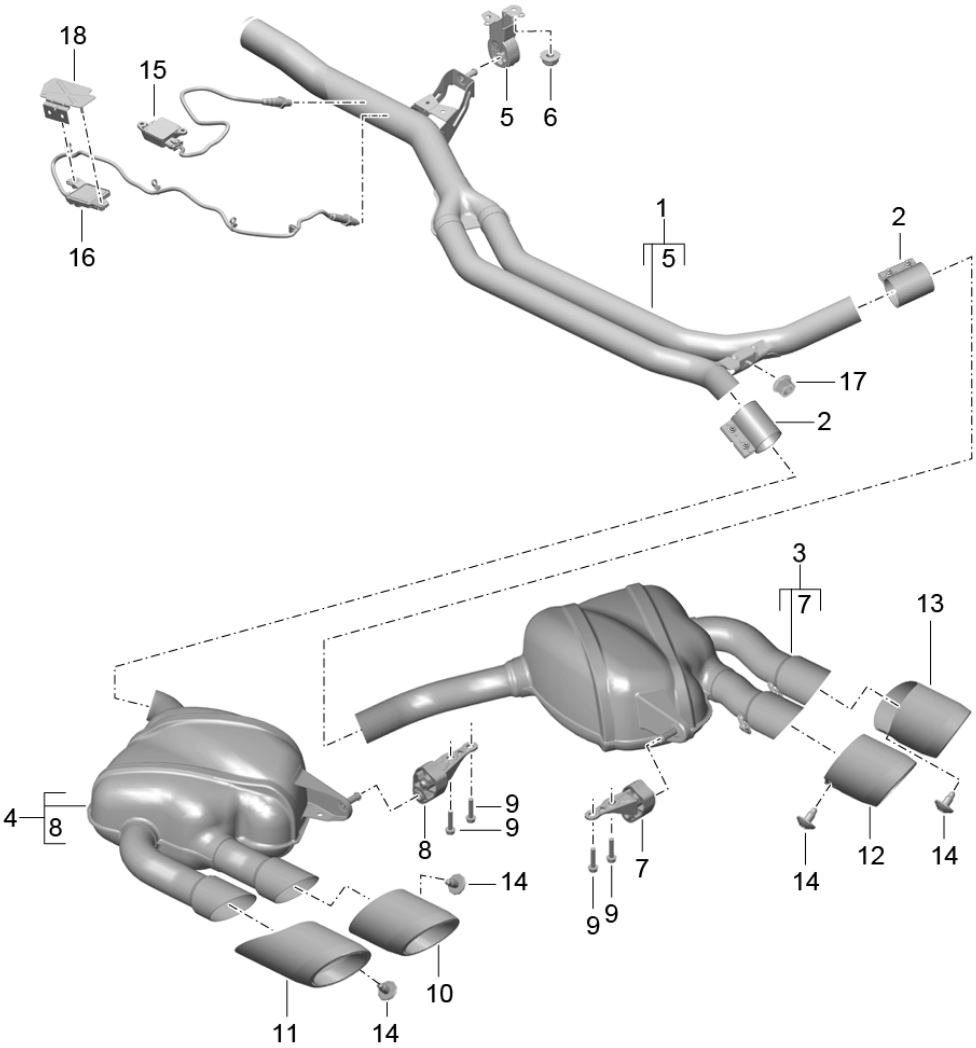

Model: 95B **Model life 2014>>**

Pos	Part Number	Description	Remark	Qty	Model
		Exhaust system			MCD.UD MCT.BA/BB/BC
		Front muffler Rear muffler			
1	95B 253 487 BY	Exhaust pipe		1	MCT.BA/BB/BC I0P0/0P3/0P6 I7MM
(1)	95B 253 487 CY	Exhaust pipe		1	MCD.UD I0P0/0P3/0P6
2	958 111 220 20	Clamping sleeve 55 MM		2	
3	95B 253 612 CY	Rear muffler without Tail pipe	/R	1	MCD.UD I0P3/0P6/7GH
(3)	95B 253 612 BY	Rear muffler without Tail pipe	/R	1	MCT.BA/BB/BC I0P0/0P3/0P6 I7MM
(3)		Rear muffler without Tail pipe	/R	1	MCD.UD I0P0/0P3/0P6 I7HI
4	95B 253 611 CY	Rear muffler without Tail pipe	/L	1	MCD.UD I0P0/0P3/0P6
(4)	95B 253 611 BY	Rear muffler without Tail pipe	/L	1	MCT.BA/BB/BC I0P0/0P3/0P6 I7MM
(4)		Rear muffler without Tail pipe	/L	1	MCD.UD I0P0/0P3/0P6 I7HI
5	8K0 253 144 E	Support		1	
6	N 023 003 16	Hexagon nut M 8		2	
7	8R0 253 144 C	Support		1	
8	8R0 253 144 B	Support		1	
(8)	95B 253 144	Support		1	
9	N 106 620 01	Hexagon-head bolt		4	
10	95B 253 681 C	Tail pipe Inner	/L	1	I0P0
(10)	95B 253 681 M	Tail pipe	/L	2	I0P6
(10)	95B 253 681 L	Tail pipe	/L	2	I0P3
11	95B 253 681 D	Tail pipe Outer	/L	1	I0P0
12	95B 253 682 C	Tail pipe Inner	/R	1	I0P0
(12)	95B 253 682 M	Tail pipe	/R	2	I0P6
(12)	95B 253 682 L	Tail pipe	/R	2	I0P3
13	95B 253 682 D	Tail pipe Outer	/R	1	I0P0
14	999 073 594 01	Lens-head screw M 6 X 12		4	

Illustration: 202-57

PORSCHE

Model: 95B **Model life 2014>>**

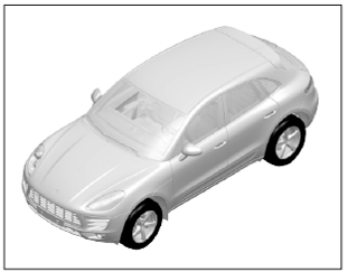

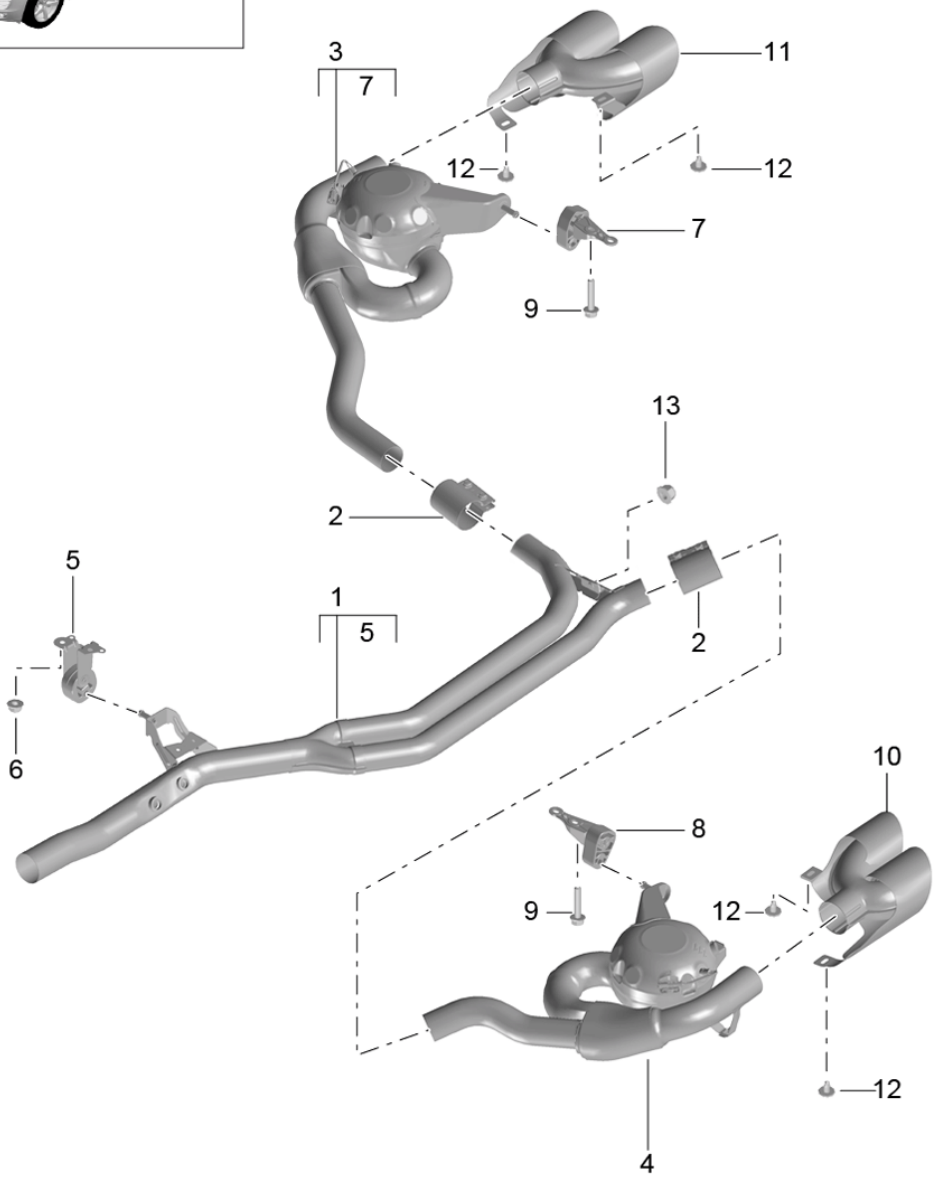

Illustration: 202-57

PORSCHE

Model: 95B **Model life 2014>>**

Pos	Part Number	Description	Remark	Qty	Model
		Exhaust system			MCD.UD MCT.BA/BB/BC
		Sport version Front muffler Rear muffler			
1	95B 253 487 BY	Exhaust pipe		1	MCT.BA/BB/BC I0P8/0P9/7MM
1	95B 253 487 CY	Exhaust pipe		1	MCD.UD I0P8/0P9
2	958 111 220 20	Clamping sleeve 55 MM		2	
3	95B 253 612 GY	Rear muffler without Tail pipe	/R	1	I0P8/0P9
4	95B 253 611 GY	Rear muffler without Tail pipe	/L	1	I0P8/0P9
5	8K0 253 144 E	Support		1	
6	N 023 003 16	Hexagon nut M 8		2	
7	8R0 253 144 C	Support		1	
8	95B 253 144	Support		1	
9	N 106 620 01	Hexagon-head bolt		4	
10	95B 253 681 T	Tail pipe	/L	1	I0P9
(10)	95B 253 681 S	Tail pipe	/L	1	I0P8
11	95B 253 682 T	Tail pipe	/R	1	I0P9
(11)	95B 253 682 S	Tail pipe	/R	1	I0P8
12	999 073 594 01	Lens-head screw M 6 X 12		4	
13	N 911 308 02	Hexagon nut M 8		1	

Illustration: 202-60

PORSCHE

Model: 95B **Model life 2014>>**

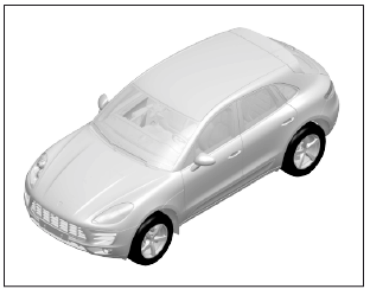

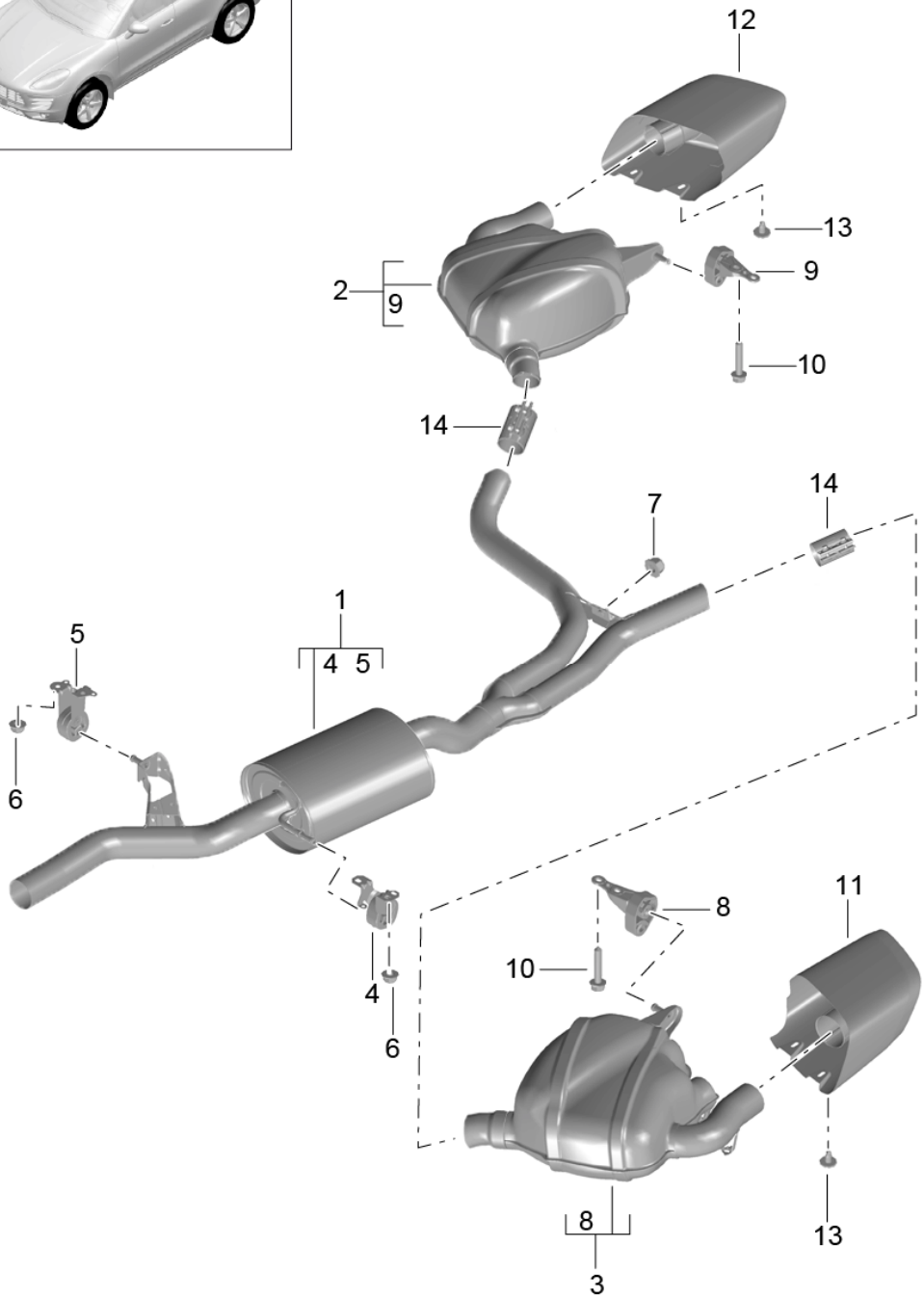

Model: 95B **Model life 2014>>**

Pos	Part Number	Description	Remark	Qty	Model
		Exhaust system			MCN.CC MCY.NA/NB/PA
		Front muffler			
		Rear muffler			
1	95B 253 411 Y	Central muffler		1	
2	95B 253 612 DY	Rear muffler	/R	1	
3	95B 253 611 DY	Rear muffler	/L	1	
4	8K0 253 144 F	Support		1	
5	8K0 253 144 E	Support		1	
6	N 023 003 16	Hexagon nut M 8		4	
7	N 911 308 02	Hexagon nut M 8		1	
8	8R0 253 144 B	Support		1	
9	8R0 253 144 C	Support		1	
10	N 106 620 01	Hexagon-head bolt M 8 X 40		4	
11	95B 253 681	Tail pipe	/L	1	I0P0
(11)	95B 253 681 AG	Tail pipe	/L	1	I0P3
(11)	95B 253 681 AH	Tail pipe	/L	1	I0P6
12	95B 253 682	Tail pipe	/R	1	I0P0
(12)	95B 253 682 AG	Tail pipe	/R	1	I0P3
(12)	95B 253 682 AH	Tail pipe	/R	1	I0P6
13	999 073 594 01	Lens-head screw M 6 X 12		4	
14	958 111 220 20	Clamping sleeve 55 MM		2	

Illustration: 202-70

PORSCHE

Model: 95B **Model life 2014>>**

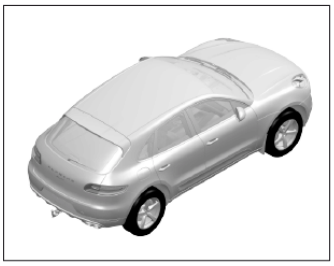

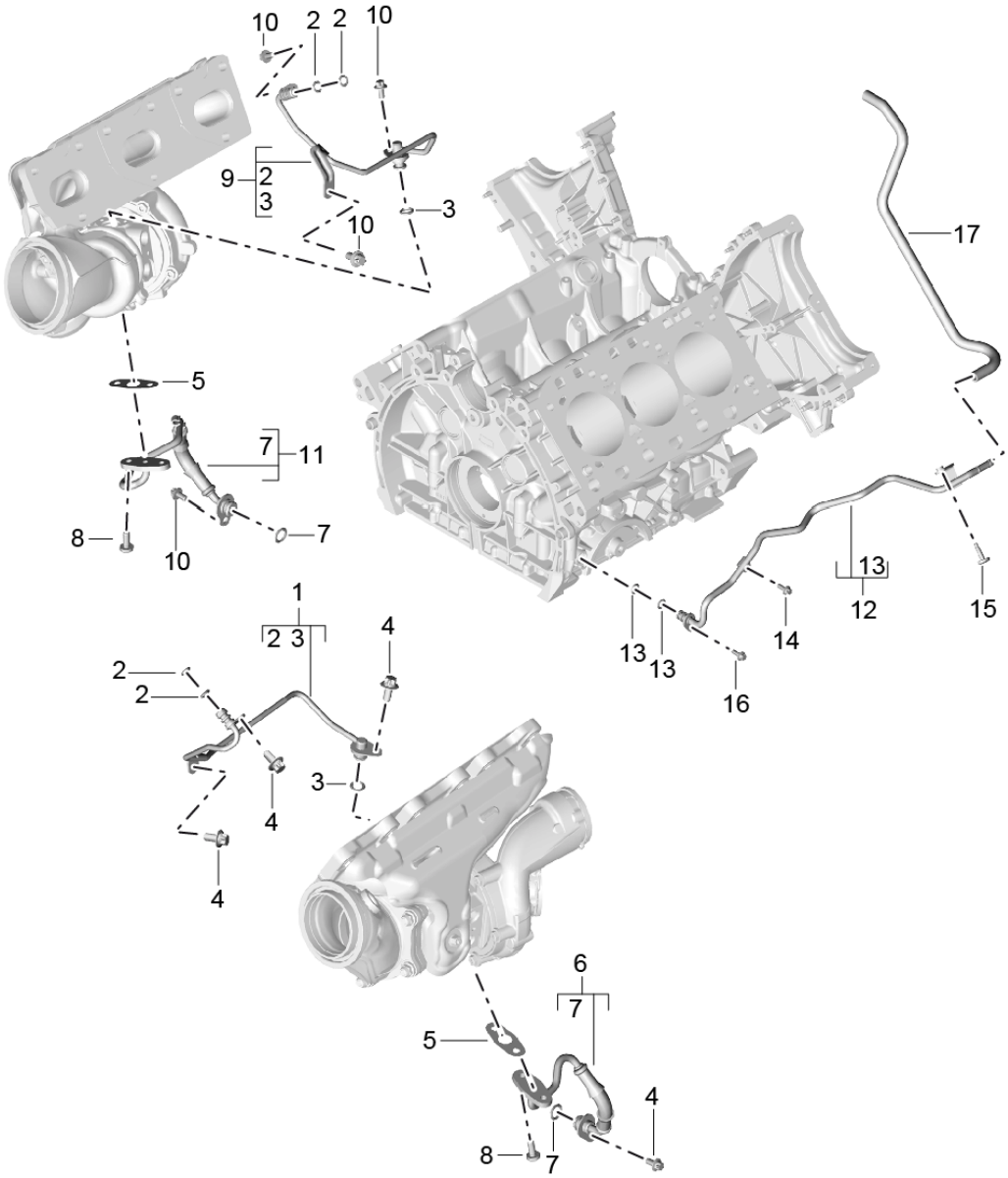

Model: 95B **Model life 2014>>**

Pos	Part Number	Description	Remark	Qty	Model
		Oil pipe for Turbocharger			MCT.LA/MA MDC.NA
1	946 107 086 30	Pressure line Cyl. 1 - 3		1	
1	946 107 086 31	Pressure line Cyl. 1 - 3		1	
2	999 707 613 40	O-ring 8 X 2,5		4	
3	999 707 603 40	O-ring 10 X 3		2	
4	900 385 041 01	Torx screw BM 6 X 12		4	
5	948 107 123 50	Gasket		2	
6	946 107 088 31	Oil pipe Cyl. 1 - 3		1	
7	999 707 568 40	O-ring 12 X 3		2	
8	999 073 601 01	Round head screw M 6 X 14		4	
9	946 107 087 30	Pressure line Cyl. 4 - 6		1	
10	900 385 041 01	Torx screw BM 6 X 12		4	
11	946 107 089 31	Oil pipe Cyl. 4 - 6		1	
12	946 107 260 31	Ventilation pipe Cyl. 1 - 3		1	
13	999 707 603 40	O-ring 10 X 3		2	
14	900 385 009 01	Torx screw BM 6 X 16		1	
15	999 073 903 31	Oval-head screw Aluminium M 6 X 20		1	
16	900 385 041 01	Torx screw BM 6 X 12		1	
17		Vent hose See illustrations 1/07/70 POS.20		1	

Illustration: 202-80

PORSCHE

Model: 95B **Model life 2014>>**

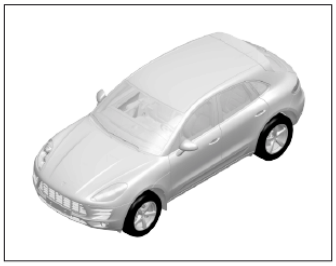

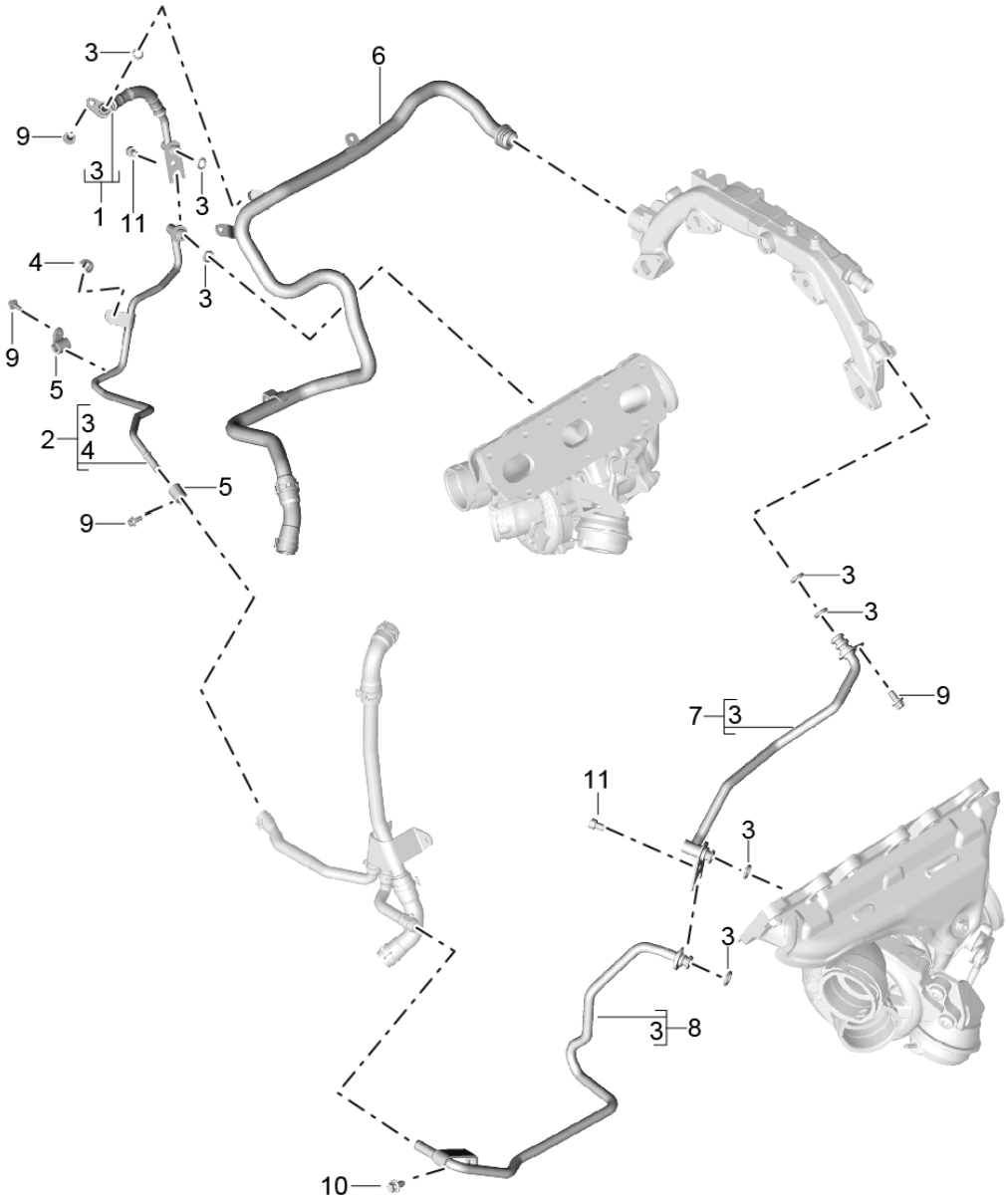

Model: 95B **Model life 2014>>**

Pos	Part Number	Description	Remark	Qty	Model
		Cooling water tube for Turbocharger			MCT.LA/MA MDC.NA
1	946 106 027 30	Cooling water tube Supply Cyl. 1 - 3		1	
2	946 106 235 31	Cooling water tube Return line Cyl. 1 - 3		1	
3	999 707 670 40	O-ring 10 X 3		7	
4	999 507 611 40	Hose holder 6,0		1	
5	999 511 116 03	Clamp 10 X 15		2	
6		Cooling water tube Supply See illustrations 1/05/30 POS.1		1	
7	946 106 237 30	Cooling water tube Supply Cyl. 4 - 6		1	
8	946 106 239 30	Cooling water tube Return line Cyl. 4 - 6		1	
9	900 385 041 01	Torx screw BM 6 X 12		4	
10	900 385 009 01	Torx screw BM 6 X 16		1	
11	N 105 447 03	Pan-head screw M 6 X 10		2	

Illustration: 202-90

PORSCHE

Model: 95B **Model life 2014>>**

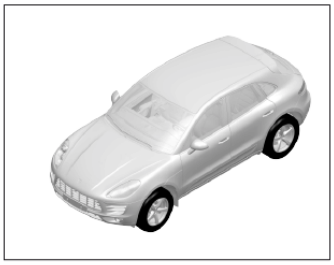

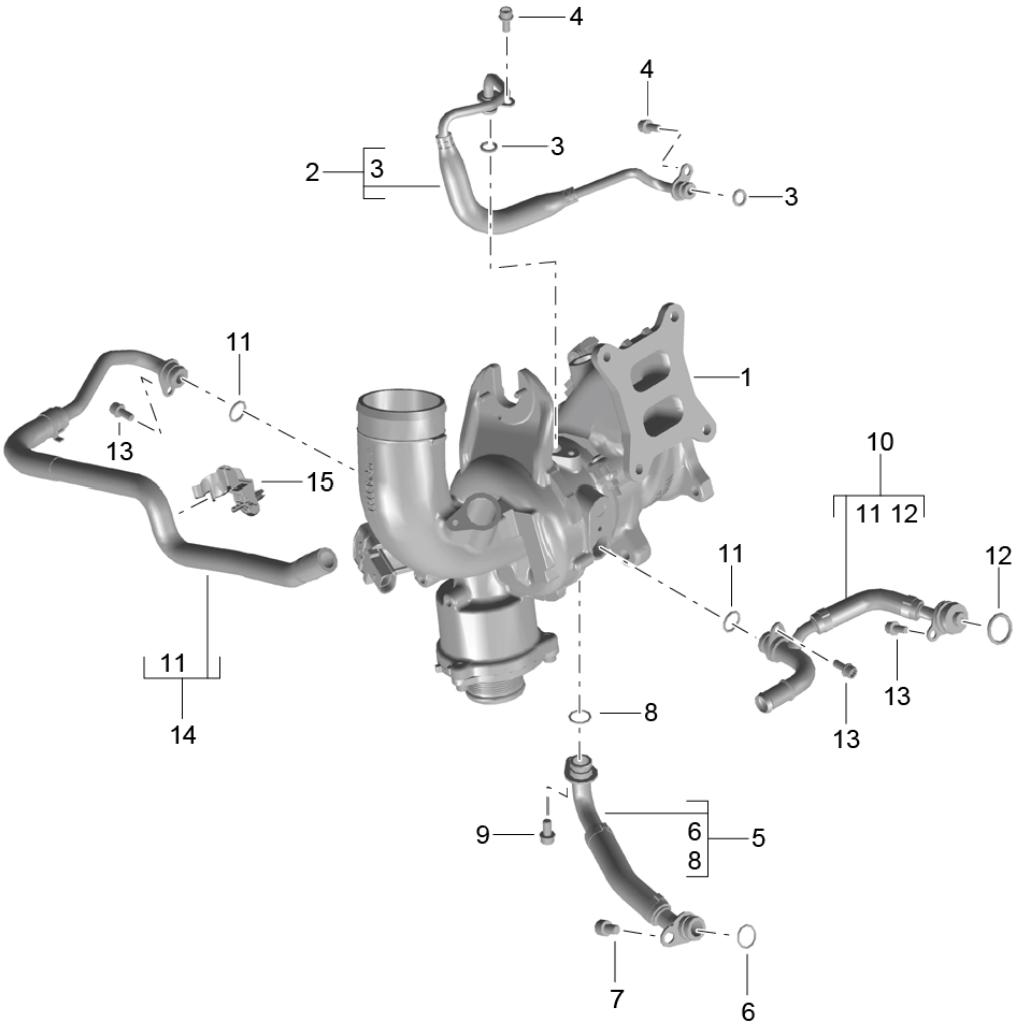

Model: 95B **Model life 2014>>**

Pos	Part Number	Description	Remark	Qty	Model
		Oil pipe			MCN.CC MCY.NA/NB/PA
		Cooling water tube for Turbocharger			
1		Turbocharger See illustrations 2/02/30 POS.1		1	
2	958 145 778 00	Pressure line		1	
3	WHT 006 123	O-ring 9,5 X 2,5		2	
4	N 106 192 01	Combination screw M 6 X 16		2	
5	958 145 735 00	Oil pipe		1	
6	WHT 006 112	O-ring 16,75 X 1,65		1	
7	N 106 109 02	Pan-head screw M 8 X 12		1	
8	WHT 006 113	O-ring 15 X 1,8		1	
9	N 106 192 01	Combination screw M 6 X 16		1	
10	958 121 497 00	Cooling water tube Supply		1	
11	WHT 006 114	O-ring 15 X 2		2	
12	WHT 006 124	O-ring 20 X 3		1	
13	N 106 192 01	Combination screw M 6 X 15		3	
14	958 121 492 00	Cooling water tube Return line		1	
15	958 115 261 00	Support		1	

Illustration: 301-00

Model: 95B **Model life 2014>>**

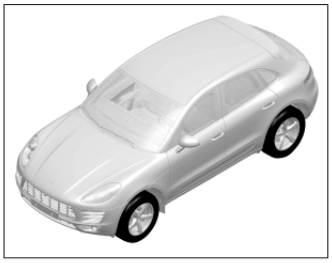

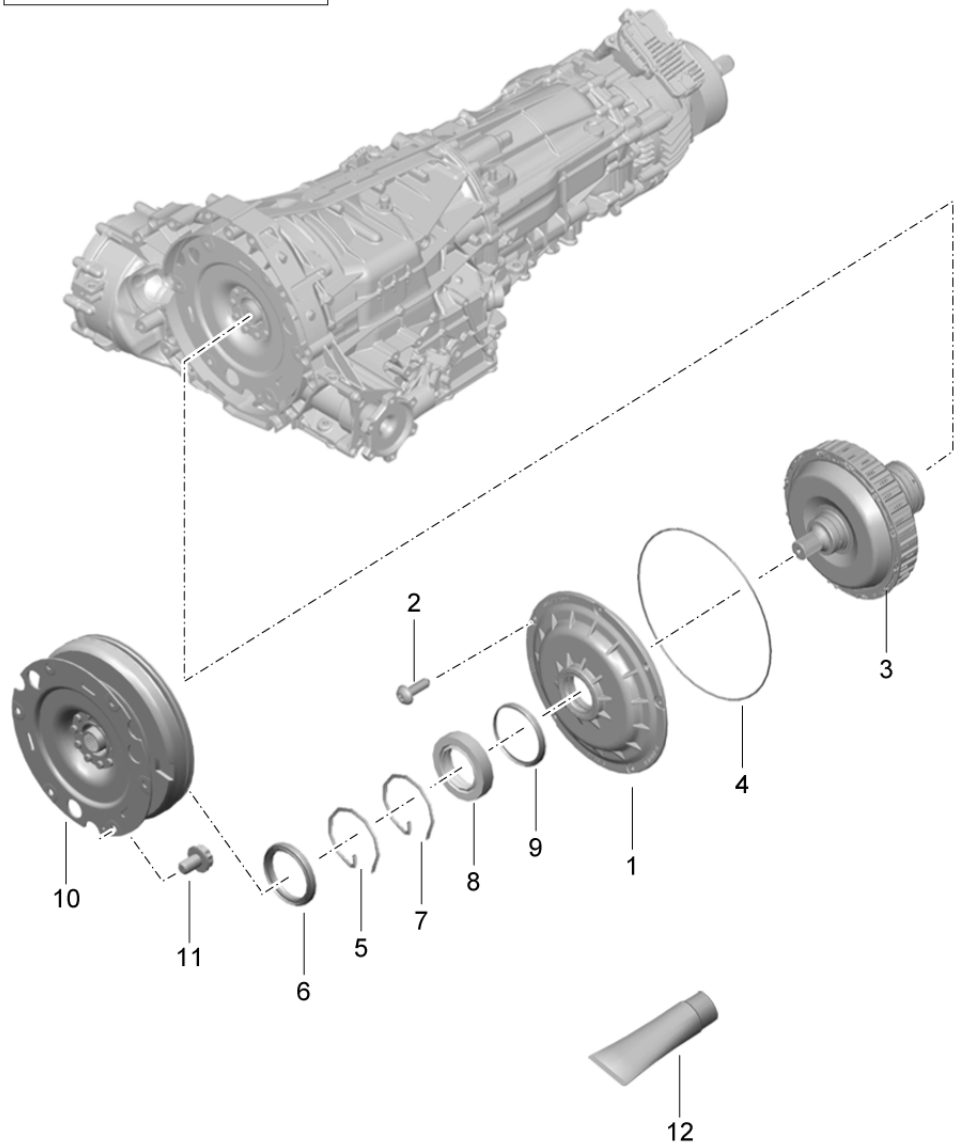

Model: 95B **Model life 2014>>**

Pos	Part Number	Description	Remark	Qty	Model
		Clutch			
		Flywheel			
1	9A7 323 259 00	Transmission cover		1	
2	N 910 968 01	Lens-head screw		5	
		M 6 X 20			
3	9A7 141 030 00	Clutch		1	MCD.UD
					MCT.BA/BB/BC
					MCT.LA
					MDC.NA
(3)	9A7 141 030 10	Clutch		1	MCN.CC
					MCT.MA
					MCY.NA/NB/PA
4	9A7 323 525 00	Sealing ring		1	
		233 X 2,5			
5	9A7 323 157 00	Circlip		1	
		72 X 1,5			
6	9A7 311 113 00	Radial shaft seal		1	
		72 X 7			
7	9A7 323 369 00	Circlip		1	
		55 X 1,5			
8	9A7 323 263 00	Ball bearing		1	
		72 X 1,5			
9	9A7 000 375 00	Thrust washer		1	
		72 X 72 X 0,5			
10	9A7 105 317 00	Flywheel		1	MCT.LA
		Use also:			
		N .911.432.03		6	
(10)	9A7 105 317 10	Flywheel		1	MCT.MA
					MDC.NA
		Use also:			
		N .911.432.03		6	
(10)	9A7 105 317 20	Flywheel		1	MCD.UD
					MCT.BA/BB/BC
		Use also:			
		N .911.432.03		6	
(10)	9A7 105 317 30	Flywheel		1	MCN.CC
					MCY.NA
		Use also:			
		N .911.432.03		3	
(10)	9A7 105 317 40	Flywheel		1	MCY.NB/PA
		Use also:			
		N .911.432.03		3	
11	N 911 432 03	12 point socket		6	MCD.UD
					MCT.BA/BB/LA
					MCT.MA
		M 10 X 1 X 15,5			MCT.BC
					MDC.NA
(11)		12 point socket		3	MCN.CC
					MCY.NA/NB/PA
		M 10 X 1 X 15,5			
12	G 052 128 A1	Grease		1	
		Radial shaft seal			
		50G			
		Container			

Illustration: 305-00

Model: 95B **Model life 2014>>**

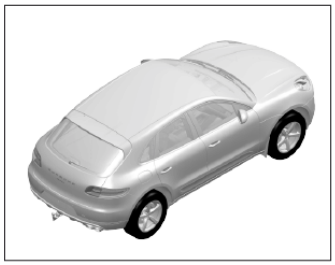

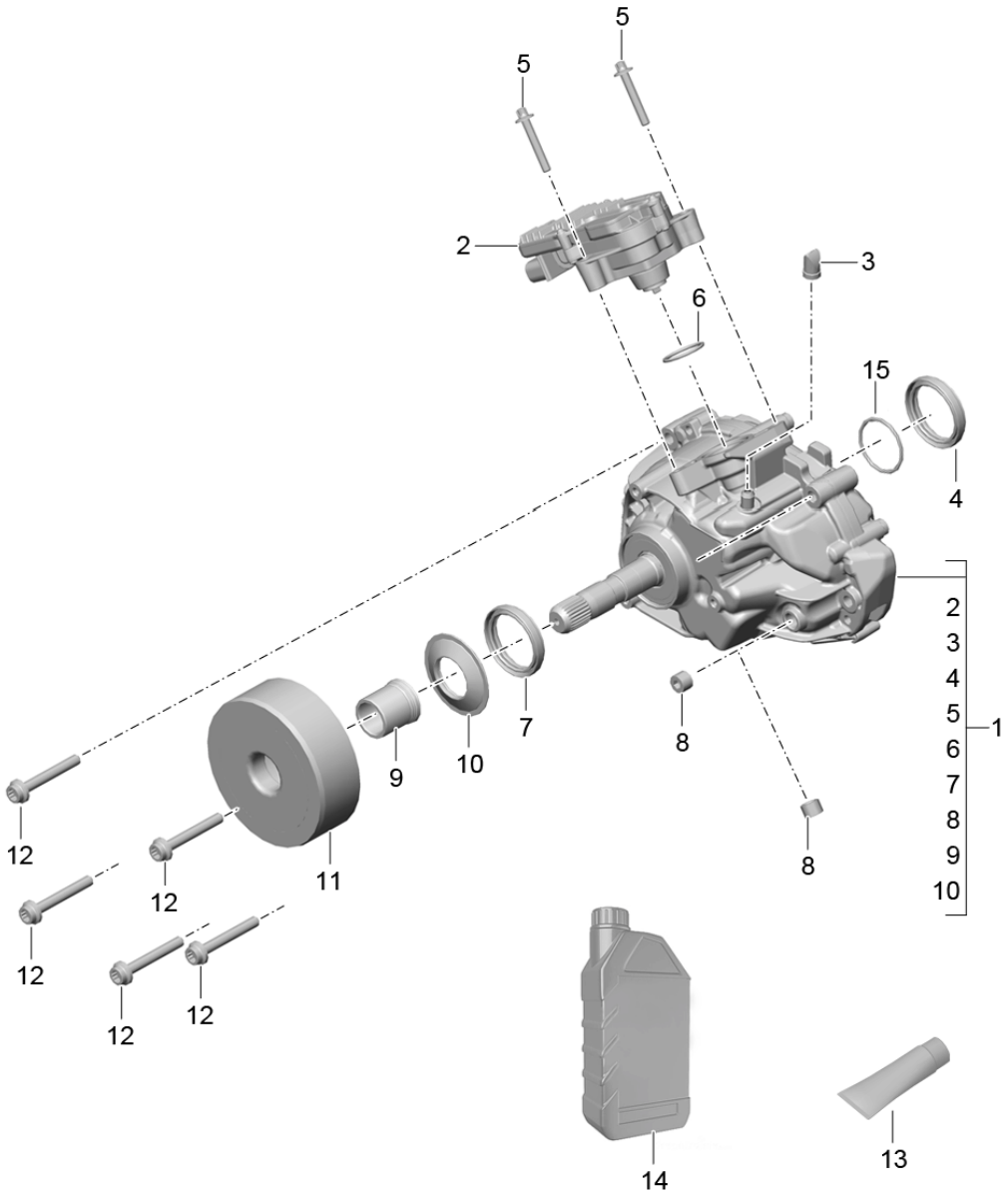

Model: 95B **Model life 2014>>**

Pos	Part Number	Description	Remark	Qty	Model
		Transfer box			
1	95B 341 010	Transfer box		1	
		When required order also:			
		Vibration damper			
		0B4.409.309.G		1	
(1)	95B 341 010 X	Transfer box		1	
		When required order also:			
		Vibration damper			
		0B4.409.309.G		1	
2	95B 927 755 B	Control unit		1	
		Transmission			
		Use also:			
		958.341.501.00		1	
		958.341.502.00		2	
3	958 341 393 00	Bleeder valve		1	
4	95B 301 189	Radial shaft seal		1	
5	900 385 071 01	Torx screw		2	
(5)	958 341 502 00	Outer hexagon round screw		2	
6	958 341 501 00	O-ring		1	
7	95B 301 189 A	Radial shaft seal		1	
8	955 301 115 01	Screw plug		2	
9	95B 341 139	Dowel sleeve		1	
10	95B 341 375	Washer		1	
11	0B4 409 309 G	Vibration damper		1	MCT.BA/BB/BC
					MCT.LA/MA
					MCD.UD
					MDC.NA
12	N 106 259 02	Multiple-tooth screw		5	
		M 10 X 70			
13	000 043 024 00	Extreme-pressure grease		1	
		1 tube			
		80 GR.			
14	000 043 301 36	Transmission oil		1	
		1 LITER			
		Container			
15	WHT 005 156	O-ring		1	
		Transfer box			

Illustration: 305-10

PORSCHE

Model: 95B **Model life 2014>>**

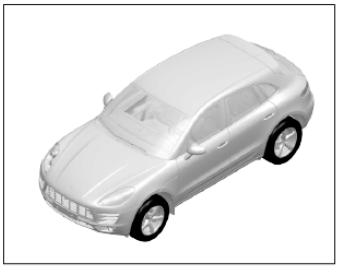

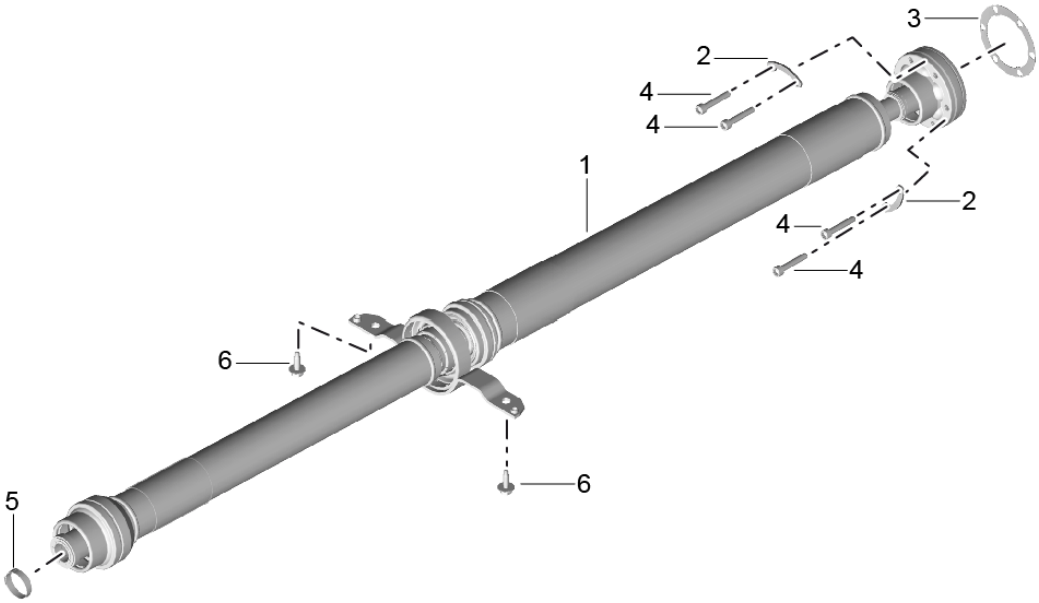

Model: 95B **Model life 2014>>**

Pos	Part Number	Description	Remark	Qty	Model
		Cardan shaft			
1	95B 521 101	Cardan shaft		1	MCT.LA/MA
(1)	95B 521 101 C	Cardan shaft		1	MCT.LA/MA MDC.NA
(1)	95B 521 101	Cardan shaft		1	MCD.UD MCT.BA/BB/BC
(1)	95B 521 101 C	Cardan shaft		1	MCD.UD MCT.BA/BB/BC
(1)	95B 521 101 A	Cardan shaft		1	MCN.CC MCY.NA
(1)	95B 521 101 B	Cardan shaft		1	MCN.CC MCY.NA/NB/PA
2	958 349 191 00	Plate		3	
3	8K0 521 142 A	Gasket		1	
4	N 107 190 01	Pan-head screw CM 8 X 45 X 30		6	
5	N 107 722 01	Hose clamp 36,1 X 9 X 0,6		1	
6	N 019 530 7	Hexagon-head bolt M 8 X 25		2	

Illustration: 305-40

PORSCHE

Model: 95B **Model life 2014>>**

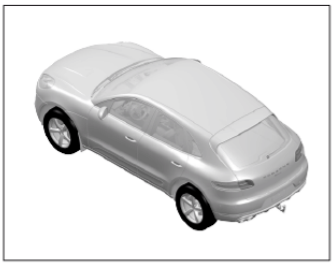

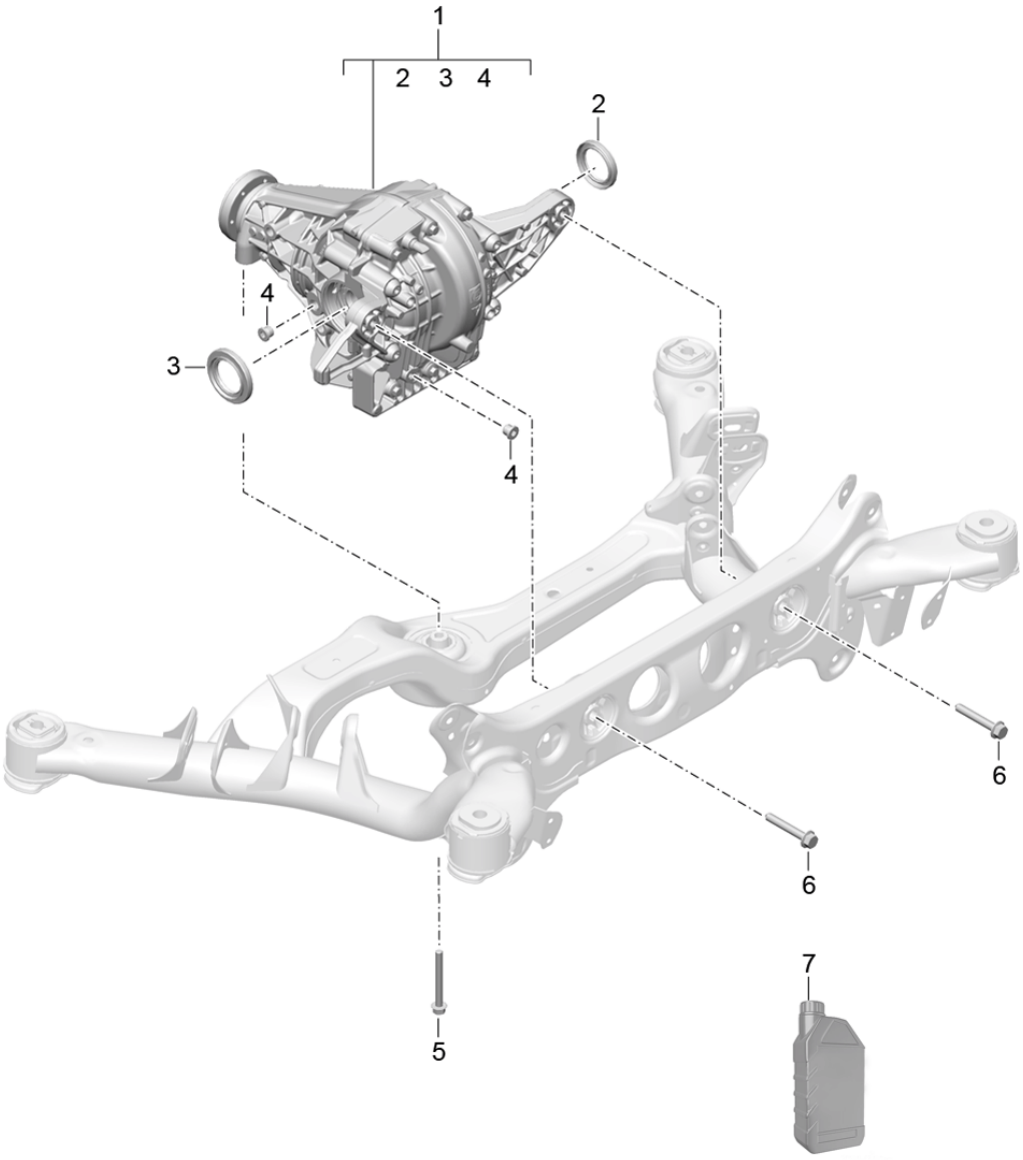

Illustration: 305-40

PORSCHE

Model: 95B **Model life 2014>>**

Pos	Part Number	Description	Remark	Qty	Model
		Rear axle differential			I1Y0
1	95B 525 015 F	Rear axle differential		1	MCT.MA MDC.NA
(1)	95B 525 015 E	Rear axle differential		1	MCD.UD MCT.BA/BB/BC MCT.LA MCN.CC MCY.NA/NB/PA
2	958 349 189 60	Shaft sealing ring		1	
3	958 349 189 50	Shaft sealing ring		1	
4	955 332 057 00	Screw plug M 16 X 1,5		2	
5	900 378 332 01	Outer hexagon round screw M 10 X 92		1	
6	N 106 405 01	Hexagon-head bolt M 12 X 1,5 X 80		2	
7	000 043 205 30	Transmission oil 75 W 90 1 LITER Container		X	

Illustration: 305-50

PORSCHE

Model: 95B **Model life 2014>>**

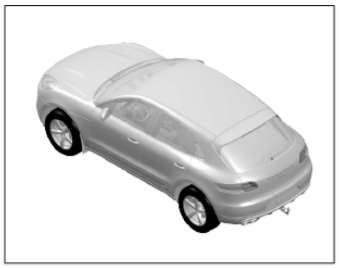

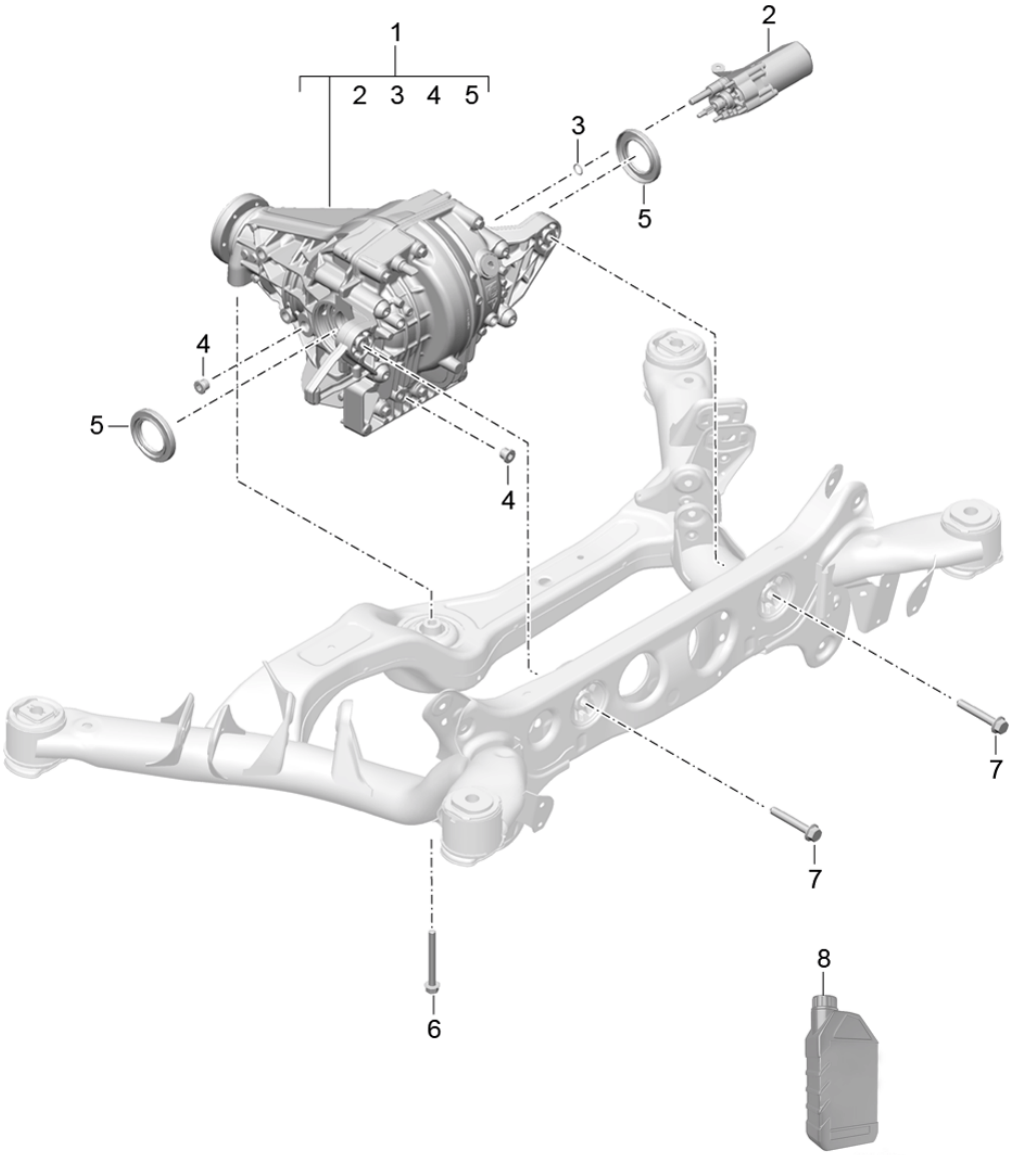

Model: 95B **Model life 2014>>**

Pos	Part Number	Description	Remark	Qty	Model
		Rear axle differential			I1Y1
1	95B 525 016 H	Rear axle differential		1	MCT.MA MDC.NA
1	95B 525 016 L	Rear axle differential		1	MCD.UD MCT.BA/BB/BC MCT.LA MCN.CC MCY.NA/NB/PA
2	95B 341 601	Electric motor Limited-slip differential Use also:		1	
		955.332.649.00 O-ring		1	
3	955 332 649 00	O-ring 25 X 2		1	
4	955 332 057 00	Screw plug		2	
5	958 349 189 50	Shaft sealing ring		2	
6	900 378 332 01	Outer hexagon round screw M 10 X 92		1	
7	N 106 405 01	Hexagon-head bolt M 12 X 1,5 X 80		2	
8	000 043 300 37	Transmission oil 75 W 90 1 LITER Container		X	

Illustration: 306-00

PORSCHE

Model: 95B **Model life 2014>>**

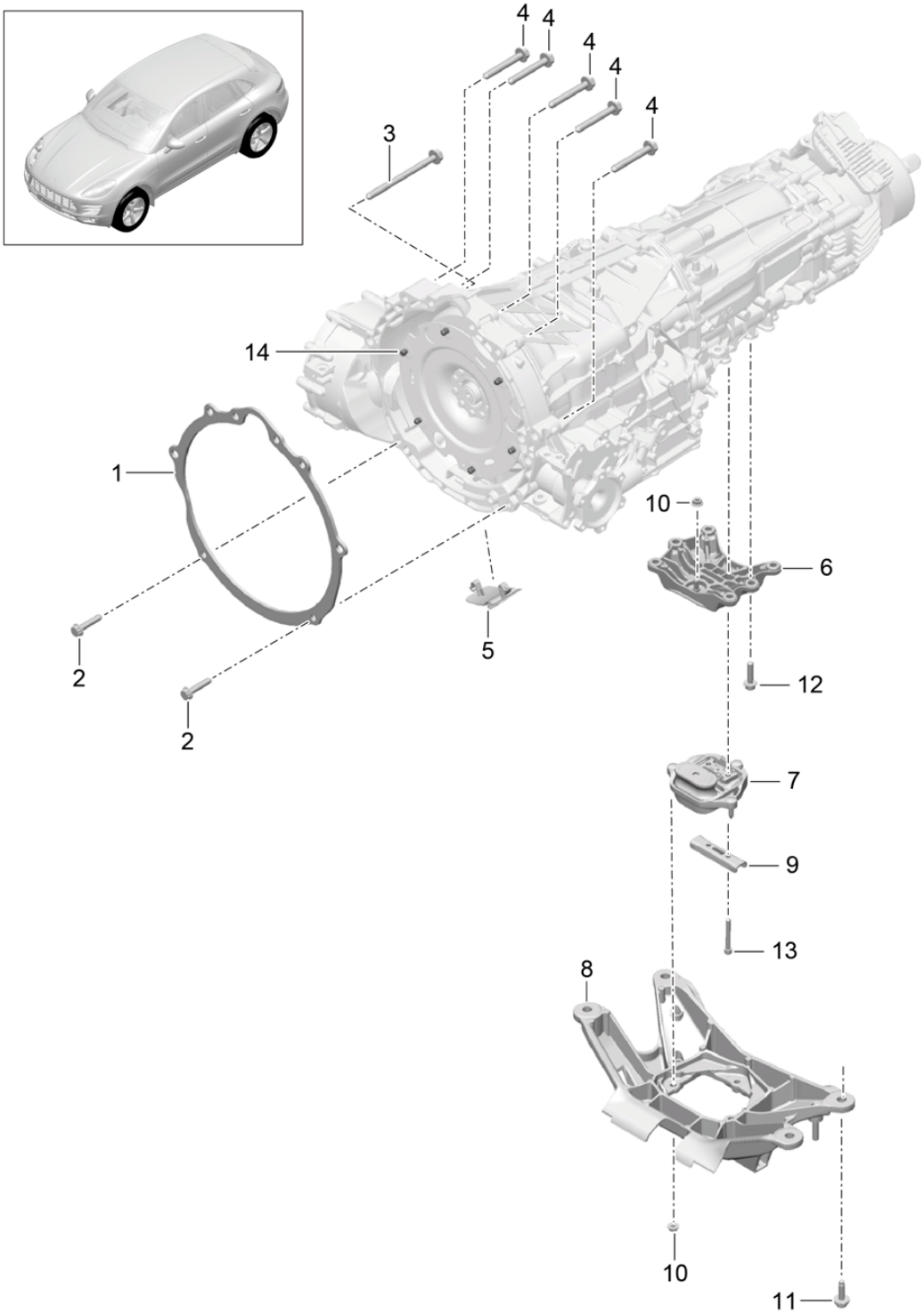

Model: 95B **Model life 2014>>**

Pos	Part Number	Description	Remark	Qty	Model
		Threaded joint			MCT.LA/MA MDC.NA
		Engine and transmission Transmission suspension			
1	95B 301 425	Spacer ring		1	
2	WHT 003 211	12 point socket M 10 X 50		2	
3	N 107 813 01	Hexagon-head bolt M 12 X 1,5 X 155		1	
4	N 107 847 01	Hexagon-head bolt M 12 X 1,5 X 85		5	
5	8K0 301 257 A	Lid		1	
6	8K0 399 115 S	Bracket		1	
(6)	95B 399 115	Bracket		1	
7	8K0 399 151 DB	Transmission mounting		1	
8	8K0 399 263 BF	Transmission carrier		1	
9	8K0 399 291 A	Stop Use also: N .107.247.01		1 2	
10	N 911 574 01	Hexagon nut M 8		4	
11	N 911 451 01	Combination screw M 10 X 40		4	
12	N 106 718 01	Pan-head screw M 10 X 40		4	
(12)	999 510 105 01	Pan-head screw M 10 X 38		6	
13	N 107 247 01	Pan-head screw M 8 X 60		2	
14	N 911 432 03	12 point socket M 10 X 1 X 15,5		6	

Illustration: 306-10

PORSCHE

Model: 95B **Model life 2014>>**

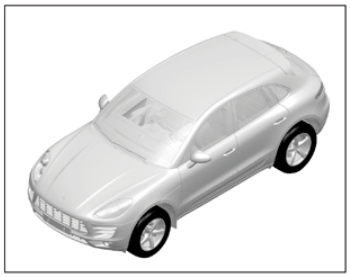

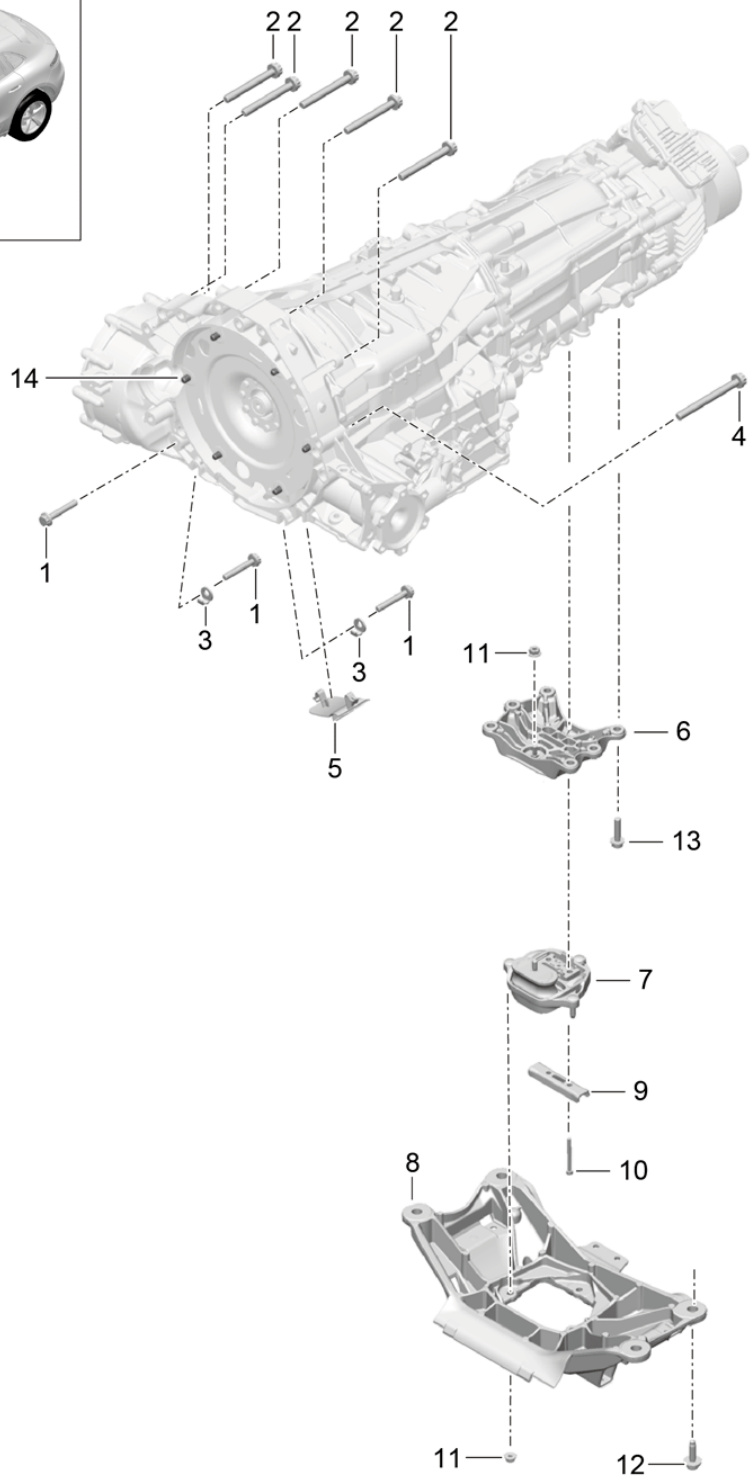

Illustration: 306-10

PORSCHE

Model: 95B **Model life 2014>>**

Pos	Part Number	Description	Remark	Qty	Model
		Threaded joint			MCD.UD MCT.BA/BB/BC
		Engine and transmission Transmission suspension			
1	N 911 507 01	12 point socket M 10 X 50		3	
2	N 911 296 01	12 point socket BM 12 X 100 X 90		5	
3	0B5 301 433	Circlip		2	
4	N 911 298 01	12 point socket BM 12 X 125 X 90		1	
5	8K0 301 257 A	Lid		1	
6	8K0 399 115 S	Bracket		1	
(6)	95B 399 115	Bracket		1	
7	8K0 399 151 DB	Transmission mounting		1	
8	95B 399 263	Transmission carrier		1	
9	8K0 399 291 A	Stop		1	
10	N 107 247 01	Pan-head screw M 8 X 60		2	
11	N 911 574 01	Hexagon nut M 8		4	
12	N 911 451 01	Combination screw M 10 X 40		4	
13	N 106 718 01	Pan-head screw		4	
(13)	999 510 105 01	Pan-head screw		6	
14	N 911 432 03	12 point socket M 10 X 1 X 15,5		6	

Illustration: 306-20

PORSCHE

Model: 95B **Model life 2014>>**

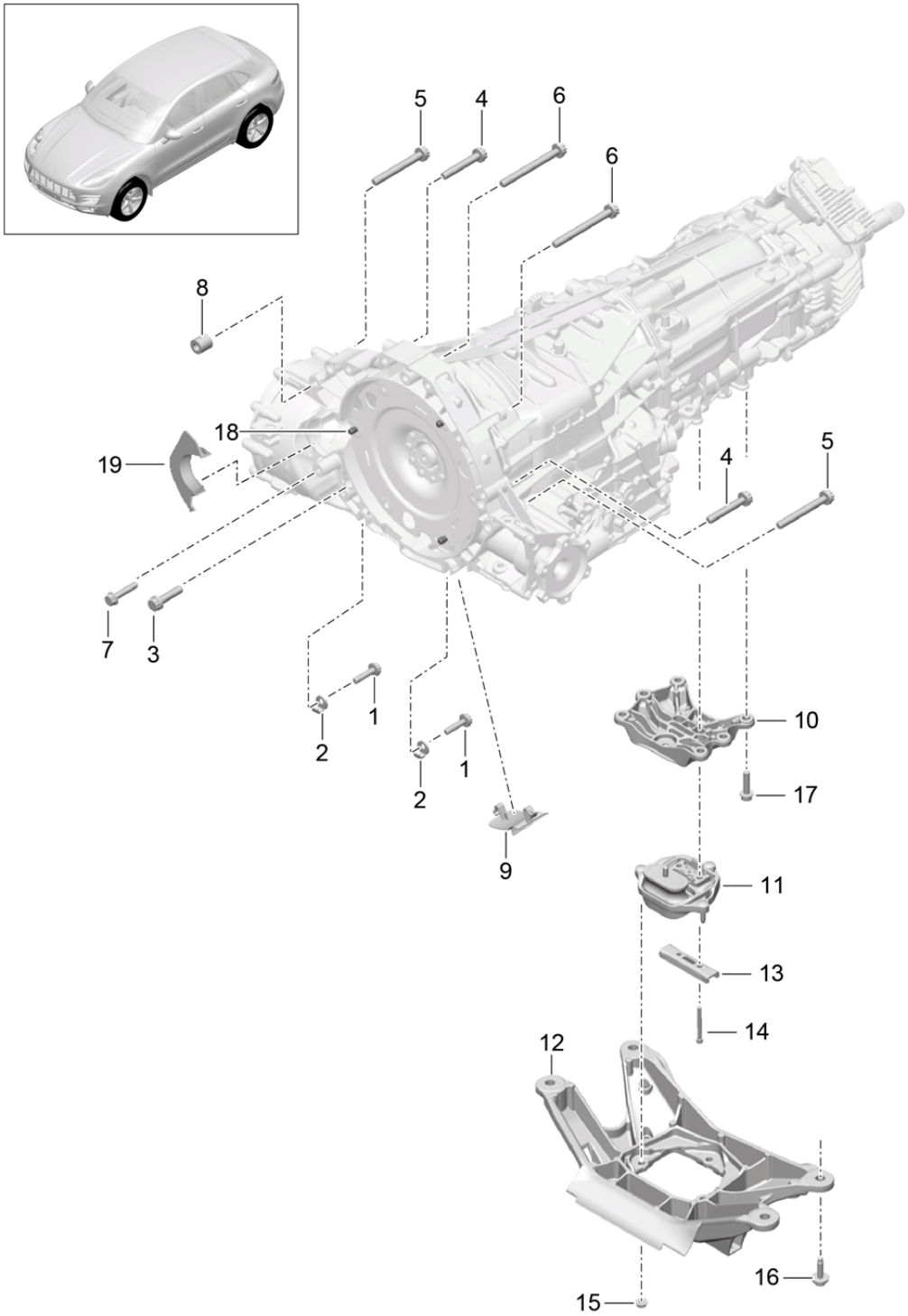

Model: 95B **Model life 2014>>**

Pos	Part Number	Description	Remark	Qty	Model
		Threaded joint			MCN.CC MCY.NA/NB/PA
		Engine and transmission			
		Transmission suspension			
1	N 911 291 01	12 point socket M 10 X 40		2	
2	0B5 301 433	Circlip		2	
3	N 911 294 01	12 point socket M 12 X 50		1	
4	N 911 295 01	12 point socket M 12 X 75		2	
5	N 911 296 01	12 point socket M 12 X 100 X 90		2	
6	N 911 297 01	12 point socket M 12 X 120 X 90		2	
7	N 103 145 06	Hexagon-head bolt M 10 X 50 X 10,9		1	
8	8K0 145 198	Spacer sleeve		1	
9	8K0 301 257 A	Lid		1	
10	95B 399 115	Bracket		1	
11	8K0 399 151 DD	Transmission mounting		1	
12	8K0 399 263 K	Transmission carrier		1	
13	8K0 399 291 A	Stop		1	
14	N 107 247 01	Pan-head screw M 8 X 60		2	
15	N 911 574 01	Hexagon nut M 8		4	
16	N 911 451 01	Combination screw M 10 X 40		4	
17	999 510 105 01	Pan-head screw		6	
18	N 911 432 03	12 point socket M 10 X 1 X 15,5		3	
19	06H 103 565	Stopper		1	

Illustration: 320-00

PORSCHE

Model: 95B **Model life 2014>>**

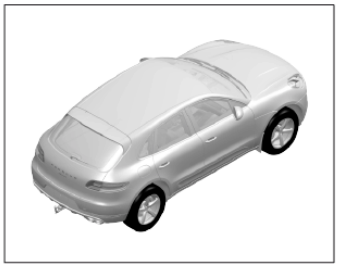

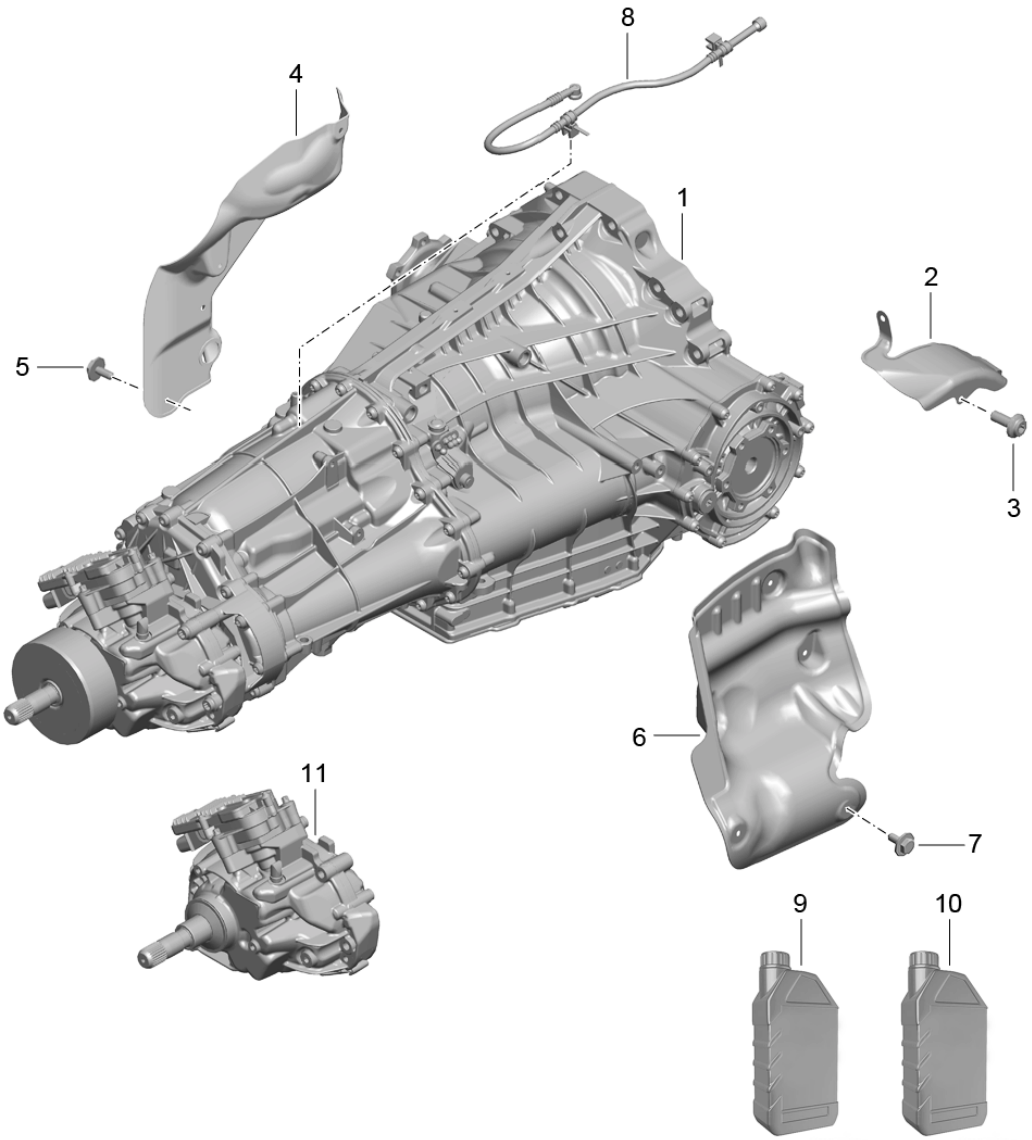

Model: 95B **Model life 2014>>**

Pos	Part Number	Description	Remark	Qty	Model
		Replacement transmission - PDK -			
1	0FD 300 040	Replacement transmission		1	MCD.UD MCT.BA/BB/BC A5B.00
	0FD 300 040 000				
(1)	0FD 300 040 X	Replacement transmission		1	MCD.UD MCT.BA/BB/BC A5B.00
	0FD 300 040 X 000				
(1)	0FD 300 040 C	Replacement transmission		1	MCT.LA A5B.01
	0FD 300 040 C 000				
(1)	0FD 300 040 CX	Replacement transmission		1	MCT.LA A5B.01
	0FD 300 040 CX 000				
(1)	0FD 300 040 D	Replacement transmission		1	MCT.MA A5B.02
	0FD 300 040 D 000				
(1)	0FD 300 040 DX	Replacement transmission		1	MCT.MA A5B.02
	0FD 300 040 DX 000				
(1)	0FD 300 040 E	Replacement transmission		1	MDC.NA A5B.02
	0FD 300 040 E 000				
(1)	0FD 300 040 EX	Replacement transmission		1	MDC.NA A5B.02
	0FD 300 040 EX 000				
(1)	0FD 300 040 B	Replacement transmission		1	MCN.CC MCY.NA A5B.03
	0FD 300 040 B 000				
(1)	0FD 300 040 BX	Replacement transmission		1	MCN.CC MCY.NA A5B.03
	0FD 300 040 BX 000				
(1)	9A7 300 040 F	Replacement transmission		1	MCY.NB/PA A5B.03
	9A7 300 040 F 000				
(1)	9A7 300 040 FX	Replacement transmission		1	MCY.NB/PA A5B.03
	9A7 300 040 FX 000				
2	95B 301 326	Heat shield		1	MCT.LA/MA A5B.01/02
		Right			
3	N 911 261 01	Pan-head screw		1	MCT.LA/MA A5B.01/02
		M 6 X 14			
4	95B 301 327 A	Heat shield		1	MCT.LA/MA A5B.01/02
		Left			
5	N 103 210 03	Combination screw		5	MCT.LA/MA A5B.01/02
		M 6 X 16			
6	95B 301 328 A	Heat shield		1	MCT.LA/MA A5B.01/02
		Right			
7	N 103 210 03	Combination screw		5	MCT.LA/MA A5B.01/02
		M 6 X 16			
8	0B5 301 675 A	Breather hose		1	
9	G 052 529 A2	Transmission oil Clutch		X	

Model: 95B **Model life 2014>>**

Pos	Part Number	Description	Remark	Qty	Model
		CASTROL BOT 342 A 1 LTR. Container			
10	G 052 513 A2	Transmission oil Gear set CASTROL BOT 233 Q 1 LTR. Container		X	
(10)	G 055 532 A2	Transmission oil Gear set CASTROL BOT 233 FEQ 1 LTR. Container		X	
11		Transfer box See illustrations 3/05/00 POS.1		1	

Illustration: 320-10

PORSCHE

Model: 95B **Model life 2014>>**

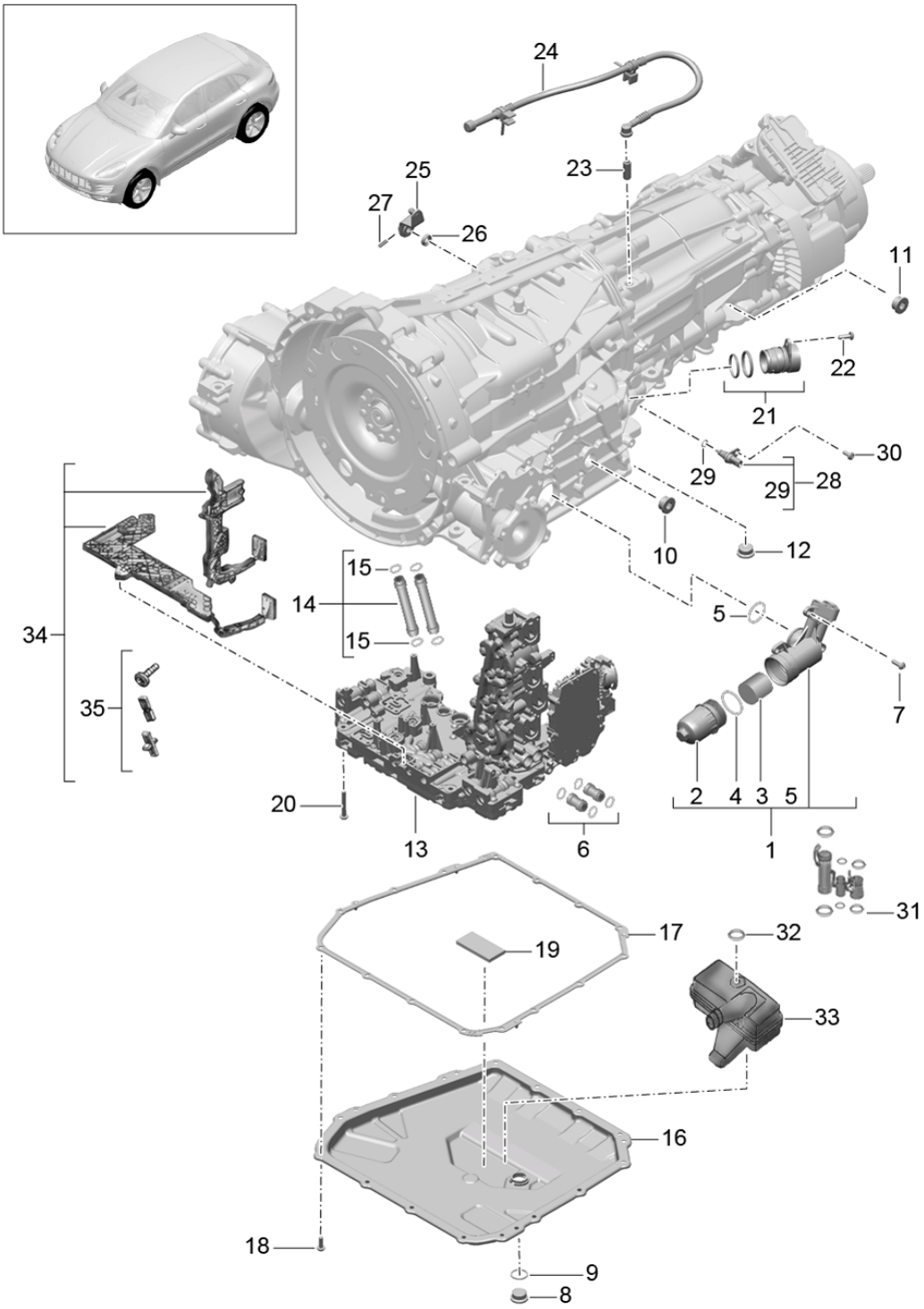

Model: 95B **Model life 2014>>**

Pos	Part Number	Description	Remark	Qty	Model
		- PDK -			
		Transmission			
		Single parts			
1	0B5 325 060 C	Housing		1	
		for			
		Oil filter			
2	0B5 325 240 B	Lid		1	
		for			
		Oil filter			
3	0B5 325 330 A	Filter element		1	
		Use also:			
		WHT.005.499.A			
4	WHT 005 499 A	O-ring		1	
		40 X 2,5			
5	WHT 005 379	O-ring		1	
		36 X 2,5			
6	0B5 321 473	Oil tube		2	
7	N 910 968 01	Lens-head screw		1	
		M 6 X 20			
8	WHT 005 282	Drain plug		1	
		Oil pan			
9	N 013 827 5	Sealing ring		1	
		Drain plug			
10	WHT 003 487	Screw plug		1	
11		Screw plug		1	
12		Screw plug		1	
13	0B5 325 025 AC	Slide-valve gearbox		1	
	0B5 325 025 AC Z00				
14	0B5 315 105 TC	Oil tube		1	
(14)	0B5 315 100	Oil tube		1	
15	WHT 004 647	O-ring		4	
		10,8 X 1,78			
16	0B5 321 361 C	Oil pan		1	
17	0B5 321 371 E	Gasket		1	
		Oil pan			
18	N 910 968 01	Lens-head screw		15	
		M 6 X 20			
19	097 321 368	Magnet		2	
20	N 910 973 02	Torx screw		6	
		M 6 X 45			
21	0B5 325 571	Sleeve		1	
		with			
		Gaskets			
22	N 910 968 01	Lens-head screw		1	
		M 6 X 20			
23	02H 409 275 A	Sleeve		1	
		Breather hose			
24		Breather hose		1	
		See illustrations			
		3/20/00			
		POS.8			
25	0B5 321 171 A	Lever		1	
		for			
		Cable			
26	0B5 301 457	Shaft sealing ring		1	
27	N 043 314 2	Roll pin		1	
28	079 919 525 H	Temperature sensor		1	MCT.LA/MA
					MDC.NA
29	WHT 002 287 E	O-ring		1	MCT.LA/MA
					MDC.NA
		5,6 X 2			
30	N 104 056 04	Oval-head screw		1	MCT.LA/MA
					MDC.NA

Model: 95B **Model life 2014>>**

Pos	Part Number	Description	Remark	Qty	Model
		M 6 X 14			
31	0B5 315 105 TA	Oil tube with O-ring		1	
32	WHT 003 379	O-ring 10 X 2		1	
33	0B5 325 429 E	Oil strainer		1	
34	0B5 398 009 D	Repair kit Printed circuit film Slide-valve gearbox		1	
35	0B5 398 008	Set of fastening parts Printed circuit film Slide-valve gearbox		1	

Illustration: 320-15

PORSCHE

Model: 95B **Model life 2014>>**

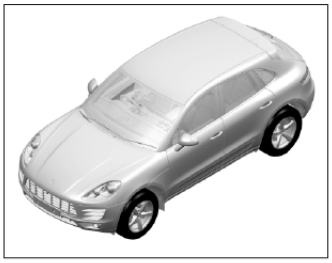

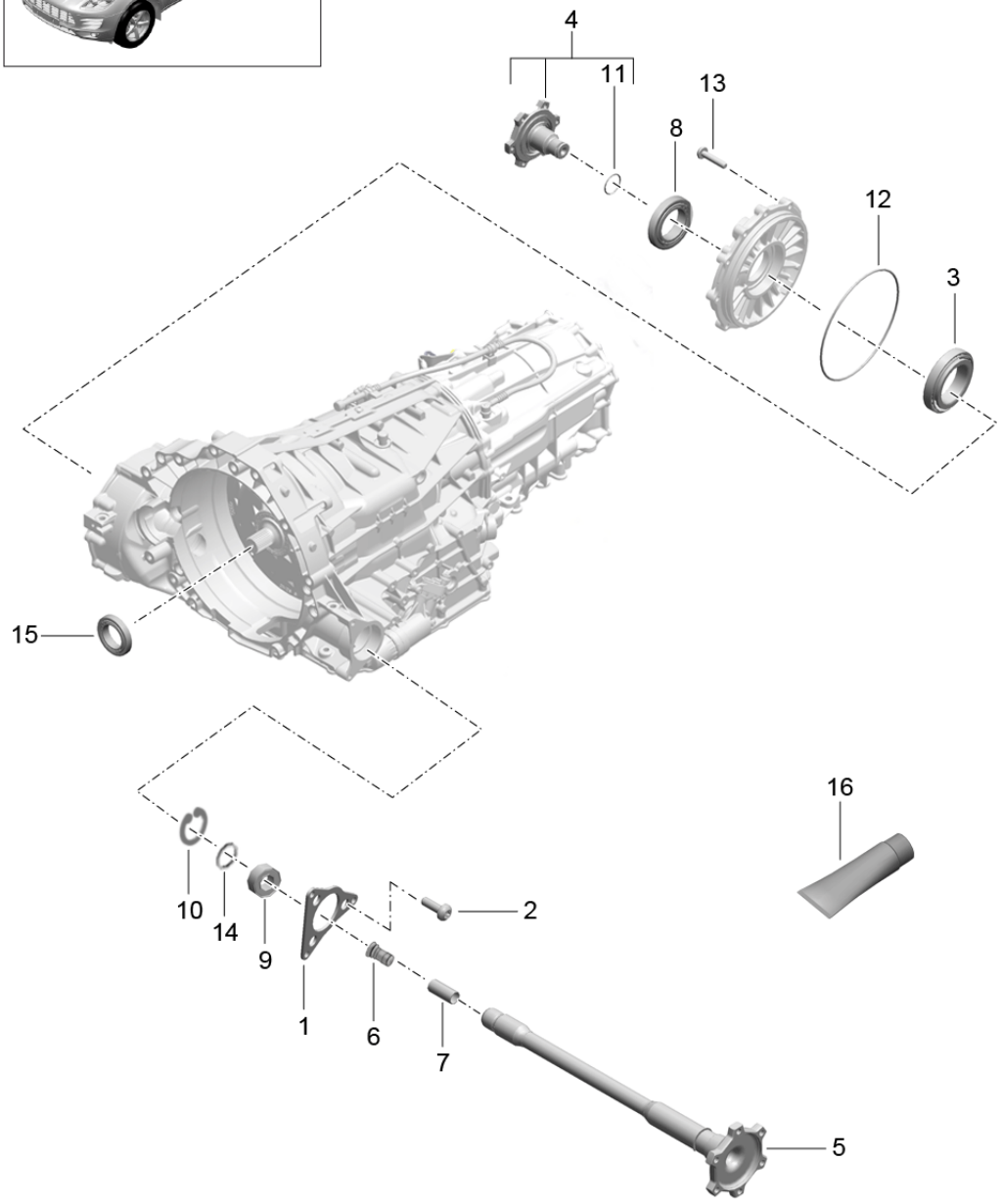

Illustration: 320-15

Model: 95B **Model life 2014>>**

Pos	Part Number	Description	Remark	Qty	Model
		- PDK -			
		Transmission			
		Front-axle final drive			
1	9A7 409 175 00	Lid		1	
		Left			
2	N 912 088 01	Pan-head screw		3	
		M 8 X 25			
3	9A7 409 399 00	Radial shaft seal		1	
		Left			
4	9A7 409 344 00	Flanged shaft		1	
		Right			
5	9A7 409 355 00	Flanged shaft		1	
		Left			
6	9A7 409 368 00	Compression spring		1	
7	9A7 409 370 00	Cam follower		1	
8	9A7 409 400 00	Radial shaft seal		1	
		Right			
9	9A7 409 294 00	Deep-groove ball bearing		1	
		35 X 62 X 41			
10	9A7 409 297 00	Circlip		1	
		30 X 1,5			
11	012 409 413	Circlip		1	
		35 X 1,5			
12	9A7 004 074 00	O-ring		1	
		185 X 3,5			
13	N 106 070 02	Oval-head screw		10	
		M 8 X 38			
14	9A7 409 227 00	Washer		1	
15	9A7 311 113 00	Radial shaft seal		1	
16	G 052 128 A1	Grease		1	

Illustration: 340-01

PORSCHE

Model: 95B **Model life 2014>>**

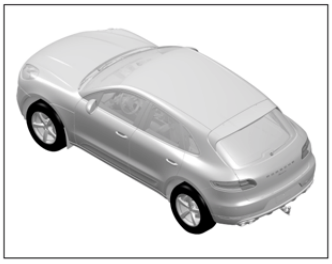

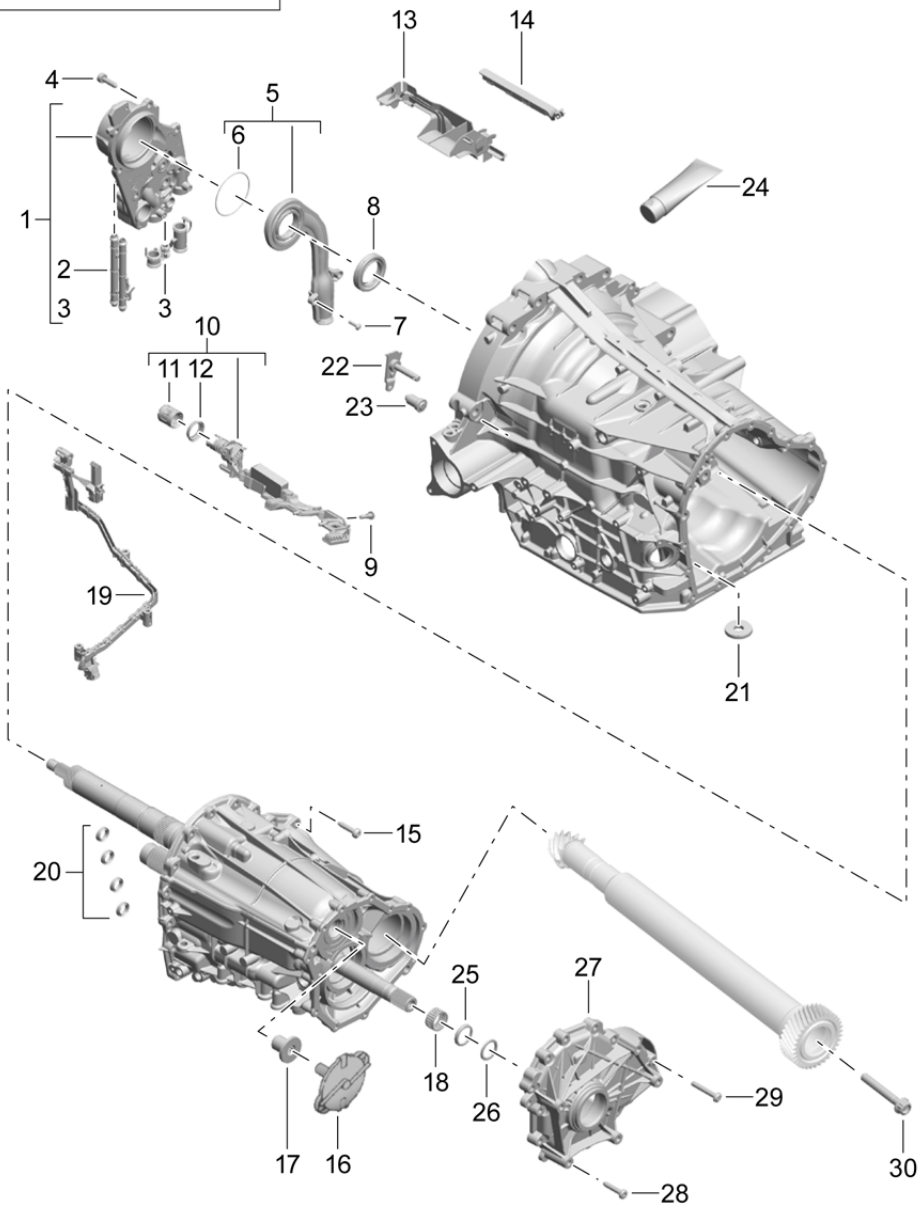

Illustration: 340-01

Model: 95B **Model life 2014>>**

Pos	Part Number	Description	Remark	Qty	Model
		Oil pump Electronics			
1	9A7 315 105 00	Oil pump Transmission		1	
2	0B5 315 100	Oil tube with Sealing ring		1	
3	0B5 315 105 TA	Oil tube with Sealing ring		1	
4	N 910 766 01	Pan-head screw M 8 X 30		5	
5	9A7 301 515 00	Venturi tube Transmission		1	
6	9A7 004 741 00	O-ring 71,5 X 1,5		1	
7	N 106 373 02	Oval-head screw M 5 X 20		2	
8	9A7 301 227 00	Radial shaft seal		1	
9	N 911 963 01	Torx screw M 6 X 8 X 25		1	
10	9A7 927 321 00	Speed sensor Use also: 9A7.321.391.00		1	
11	9A7 927 407 00	Locking ring		1	
12	9A7 927 377 00	Gasket		1	
13	9A7 301 311 00	Oil collection container		1	
14	9A7 301 279 00	Oil collection container		1	
15	9A7 002 459 00	Torx screw M 8 X 40		17	
16	9A7 301 134 00	Oil duct		1	
17	9A7 007 674 00	Banjo bolt M 26 X 1,5 X 29		1	
18	9A7 311 525 00	Needle-roller bearing		1	
19	9A7 321 391 00	Wiring harness		1	
20	9A7 311 944 00	Radial shaft seal 26 X 16 X 6		4	
21	9A7 301 143 00	Magnet		1	
22	9A7 321 191 00	Shift rod Use also: 9A7.321.222.00		1	
23	9A7 321 222 00	Shift rod		1	
24	000 043 300 33	Sealing compound 100 G		1	
28	9A7 002 079 00	Torx screw M 8 X 43		11	
29	9A7 001 958 00	Torx screw M 8 X 55		2	
30	9A7 001 955 00	Hexagon-head bolt		1	

Illustration: 360-00

PORSCHE

Model: 95B **Model life 2014>>**

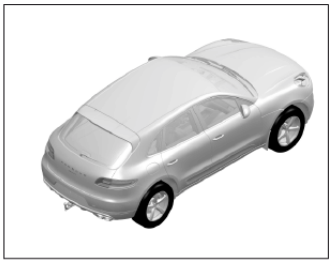

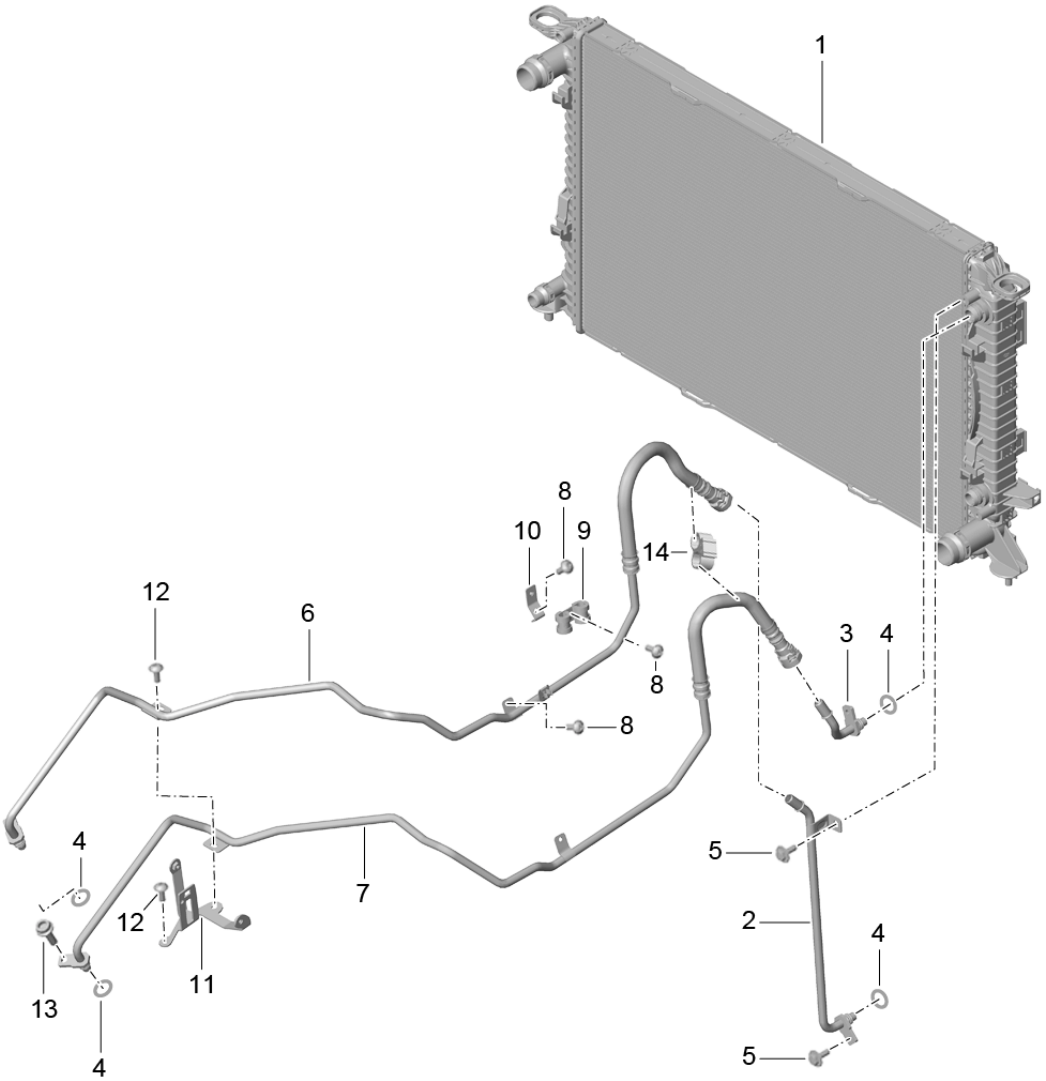

Model: 95B **Model life 2014>>**

Pos	Part Number	Description	Remark	Qty	Model
		- PDK -			MCT.LA/MA MDC.NA
		Transmission			
		Transmission oil cooler			
		Oil pipe			
1		Radiator		1	
		See illustrations			
		1/05/35			
		POS.1			
2	95B 317 825 A	Oil pipe		1	
3	95B 317 826 A	Oil pipe		1	
4	N 906 660 01	O-ring		4	
		11,5 X 3			
5	N 100 095 06	Hexagon-head bolt		2	
		M 6 X 18			
6	95B 317 817 A	Oil pipe		1	
		Use also:			
		958.572.699.00		1	
7	95B 317 818 A	Oil pipe		1	
		Use also:			
		958.572.699.00		1	
8	N 106 320 03	Oval-head screw		3	
		M 6 X 16			
(8)	N 103 352 06	Round head screw		1	
		M 6 X 12			
9	8K0 317 063 C	Clip		1	
10	95B 317 355	Support		1	
11	95B 121 305 B	Support		1	
12	N 106 320 03	Oval-head screw		2	
		M 6 X 16			
13	N 106 893 02	Pan-head screw		1	
		M 8 X 25			
14	958 572 699 00	Grommet		1	

Illustration: 360-10

PORSCHE

Model: 95B **Model life 2014>>**

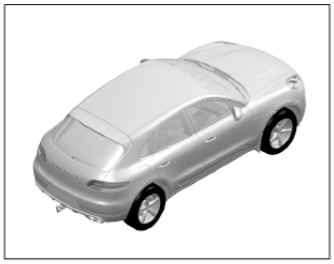

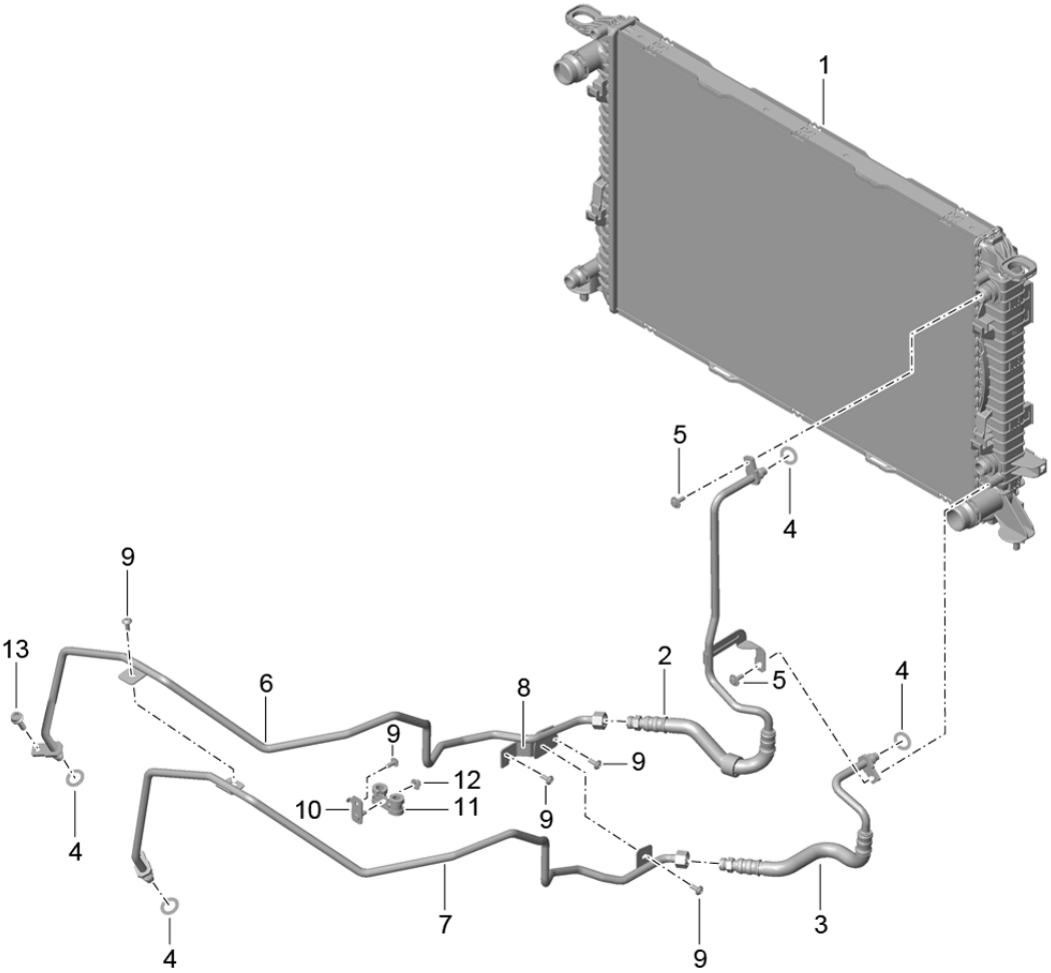

Illustration: 360-10

PORSCHE

Model: 95B **Model life 2014>>**

Pos	Part Number	Description	Remark	Qty	Model
		- PDK -			MCD.UD MCT.BA/BB/BC
		Transmission			
		Transmission oil cooler			
		Oil pipe			
1		Radiator See illustrations 1/05/35 POS.1		1	
2	8R0 317 825 P	Oil pipe		1	
3	8R0 317 826 Q	Oil pipe		1	
4	N 906 660 01	O-ring 11,5 X 3		4	
5	N 100 095 06	Hexagon-head bolt M 6 X 18		2	
6	8R0 317 817 BD	Oil pipe		1	
7	8R0 317 818 BD	Oil pipe		1	
8	8K0 317 827 P	Support		1	
9	N 106 320 03	Oval-head screw M 6 X 16		4	
10	95B 317 827	Support		1	
11	8K0 317 063 C	Clip		1	
12	N 908 877 03	Hexagon nut M 6		1	
13	N 106 893 02	Pan-head screw M 8 X 25		1	

Illustration: 360-20

PORSCHE

Model: 95B **Model life 2014>>**

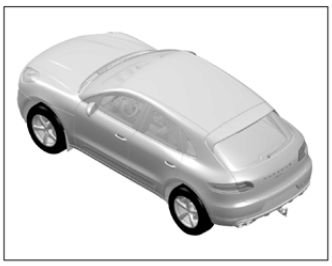

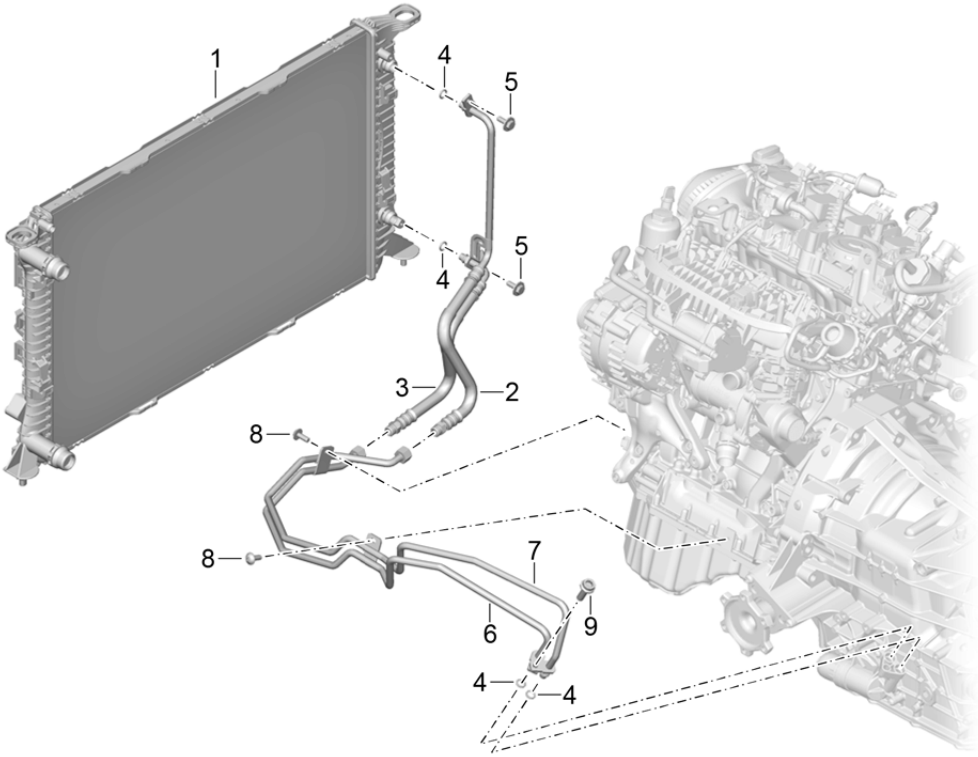

Model: 95B **Model life 2014>>**

Pos	Part Number	Description	Remark	Qty	Model
		- PDK -			MCN.CC MCY.NA/NB/PA
		Transmission Transmission oil cooler Oil pipe			
1		Radiator See illustrations 1/05/35 POS.1		1	
2	95B 317 826 B	Oil pipe		1	
3	95B 317 825 B	Oil pipe		1	
4	N 906 660 01	O-ring 11,5 X 3		4	
5	N 100 095 06	Hexagon-head bolt M 6 X 18		2	
6	8K0 317 817 CL	Oil pipe		1	
7	8K0 317 818 CL	Oil pipe		1	
8	N 106 320 03	Oval-head screw M 6 X 16		2	
9	N 106 893 02	Pan-head screw M 8 X 25		1	

Illustration: 401-00

PORSCHE

Model: 95B **Model life 2014>>**

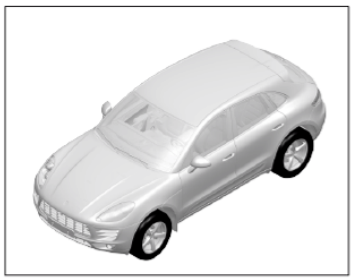

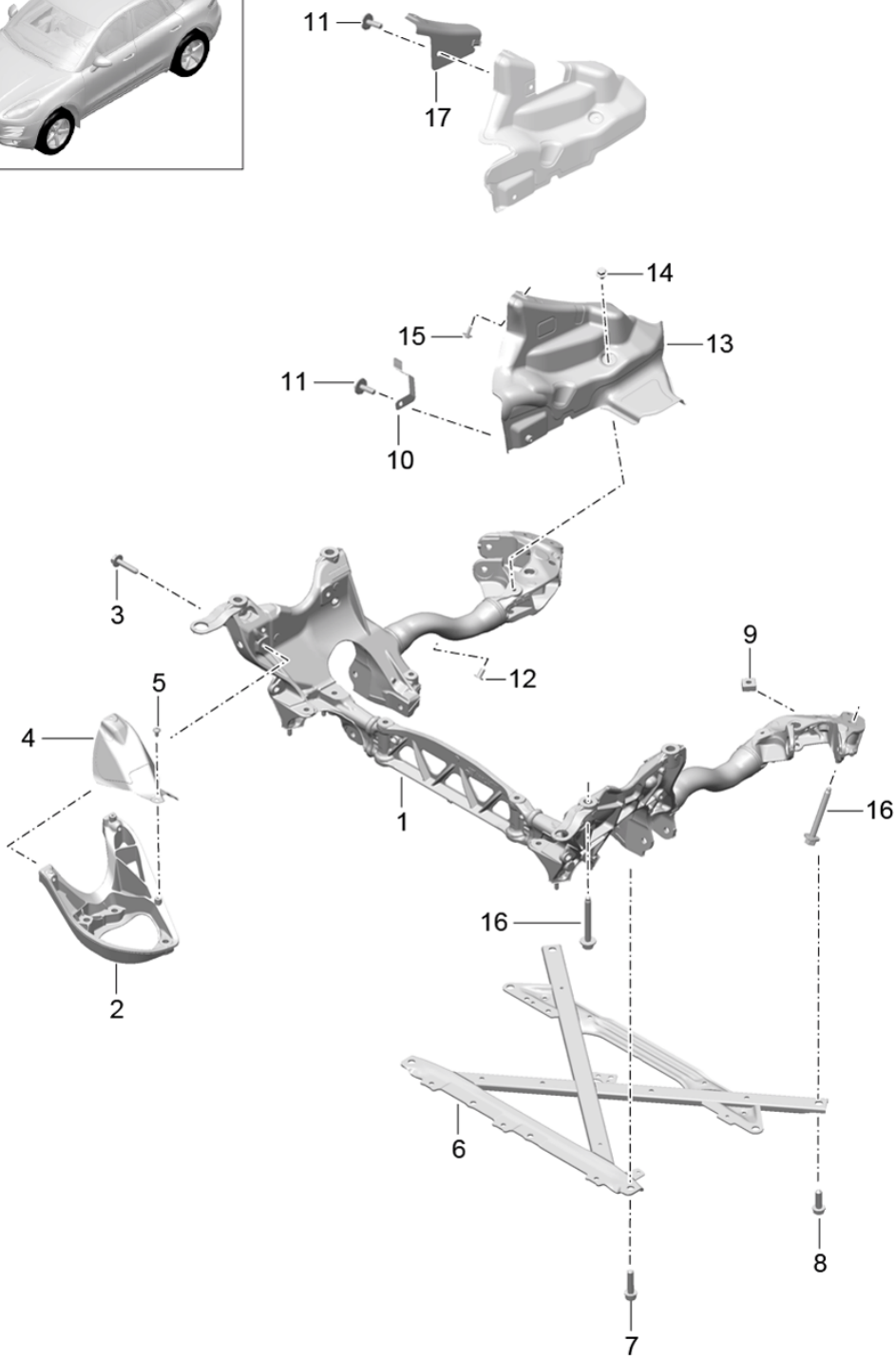

Model: 95B **Model life 2014>>**

Pos	Part Number	Description	Remark	Qty	Model
		Auxiliary support Cross member Heat shield			
1	95B 399 315 B	Auxiliary support Front axle		1	IDU0/DU1
(1)	8R0 399 315 J	Auxiliary support Front axle		1	-IDU0/-IDU1
2	95B 399 331 A	Bracket Engine mounting Left	/L	1	IDU0/DU1
(2)	95B 399 332 A	Bracket Engine mounting Right	/R	1	IDU0/DU1
3	N 106 994 01	Hexagon-head bolt M10 X 50 Bracket Engine mounting		4	IDU0/DU1
4	95B 399 299	Heat shield Left	/L	1	IDU0/DU1
(4)	95B 399 300	Heat shield Right	/R	1	IDU0/DU1
5	N 107 414 02	Oval-head screw M6 X 14 Heat shield		4	IDU0/DU1
6	8K1 399 345 E	Reinforcement	/LL	1	IL0L
(6)	8K2 399 345 E	Reinforcement	/RL	1	IL0R
7	WHT 005 372	Combination screw M12 X 1.5 X 51		2	
8	N 911 511 01	Combination screw M 12 X 1.5 X 42		4	
9	WHT 002 305	Square nut M 12 X 1.5		4	
10	8T0 399 379 A	Support Heat shield Left	/L	1	IDD7/DU0/DU1 ID1V/D43/D51
(10)	8T0 399 380 A	Support Heat shield Right	/R	1	IL0L
11	N 100 092 09	Hexagon-head bolt M6 X 20		2	IDD7/DU0/DU1 ID1V/D43/D51
(11)		Hexagon-head bolt M6 X 20		1	-IDD7/-IDU0 -IDU1/-ID1V -ID43/-ID51
12	N 906 365 02	Blind rivet nut M6	/LL	2	IL0L
13	8R0 399 299	Heat shield Left	/L	1	IDD7/D1V/D43 ID51
(13)	95B 399 545	Heat shield Right	/L	1	IDU0/DU1
(13)	8R1 399 300 A	Heat shield Right	/R /LL	1	IDD7/DM0/D43 ID51/L0L IL0L
(13)	95B 399 546	Heat shield Right	/R /LL	1	IDU0/DU1/L0L IL0L
(13)	95B 399 546 A	Heat shield Right	/R /RL	1	IDU0/DU1/L0R IL0R
14	N 910 793 01	Hexagon-head bolt M8 X 16		2	IDD7/DU0/DU1 ID1V/D43/D51

Model: 95B **Model life 2014>>**

Pos	Part Number	Description	Remark	Qty	Model
(14)		Hexagon-head bolt M8 X 16		1	-IDD7/-IDU0 -IDU1/-ID1V -ID43/-ID51
15	900 075 510 01	Combination screw M6 X 20		8	IDD7/DU0/DU1 ID1V/D43/D51
16	N 911 561 01	Combination screw M 12 X 1.5 X 100 Auxiliary support Body		8	
17	8R2 399 300 A	Heat shield Right	/R /RL	1	IL0R IL0R

Illustration: 401-05

PORSCHE

Model: 95B **Model life 2014>>**

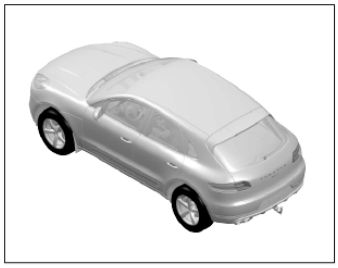

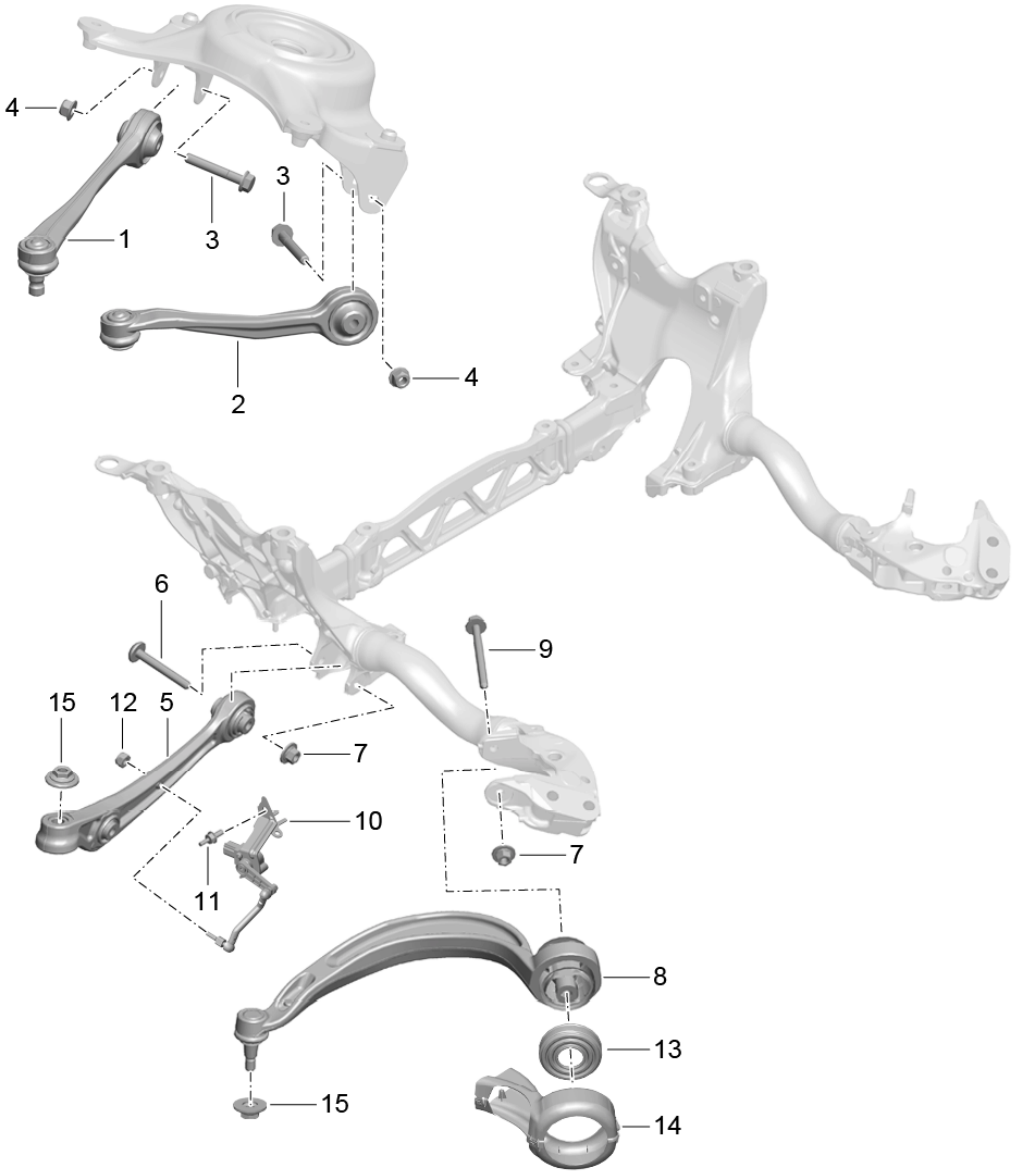

Model: 95B **Model life 2014>>**

Pos	Part Number	Description	Remark	Qty	Model
		Wishbone Control arm Self-levelling sensor			
1	8K0 407 505 B	Control arm Upper Front	/L	1	
(1)	8K0 407 506 B	Control arm Upper Front	/R	1	
2	8K0 407 509 B	Control arm Rear	/L	1	
(2)	8K0 407 510 B	Control arm Rear	/R	1	
3	N 104 253 02	Hexagon-head bolt M 10 X 62 X 45		4	
4	N 102 861 10	Hexagon nut M 10		4	
5	8K0 407 151 F	Wishbone Lower	/L	1	
(5)	8K0 407 152 F	Wishbone Lower	/R	1	
6	WHT 001 949	Round head screw M12 X 1.5 X 92		2	
7	WHT 001 987	Hexagon nut M12 X 1.5		4	
8	8R0 407 693 B	Control arm	/L	1	
(8)	8R0 407 694 B	Control arm	/R	1	
9	N 107 315 01	Hexagon-head bolt BM12 X 1.5 X 118		2	
10	8R0 941 285 D	Self-levelling sensor	/L	1	I1BA/8Q3
(10)		Self-levelling sensor	/L	1	I1BH/1BK
(10)	8R0 941 286 D	Self-levelling sensor	/R	1	I1BH/1BK
11	N 907 847 02	Screw Double sided M8/M6		2	
12	N 011 183 12	Hexagon nut M6		2	
13	95B 407 459	Protection cap Control arm		4	IDU0/DU1
(13)		Protection cap Control arm		2	IDM0
14	95B 407 119	Protection cap Control arm		2	IDU0/DU1
(14)		Protection cap Control arm		1	IDM0
15	WHT 004 898	Hexagon nut M14.1.5		4	

Illustration: 401-10

PORSCHE

Model: 95B **Model life 2014>>**

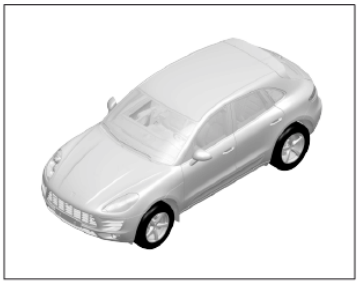

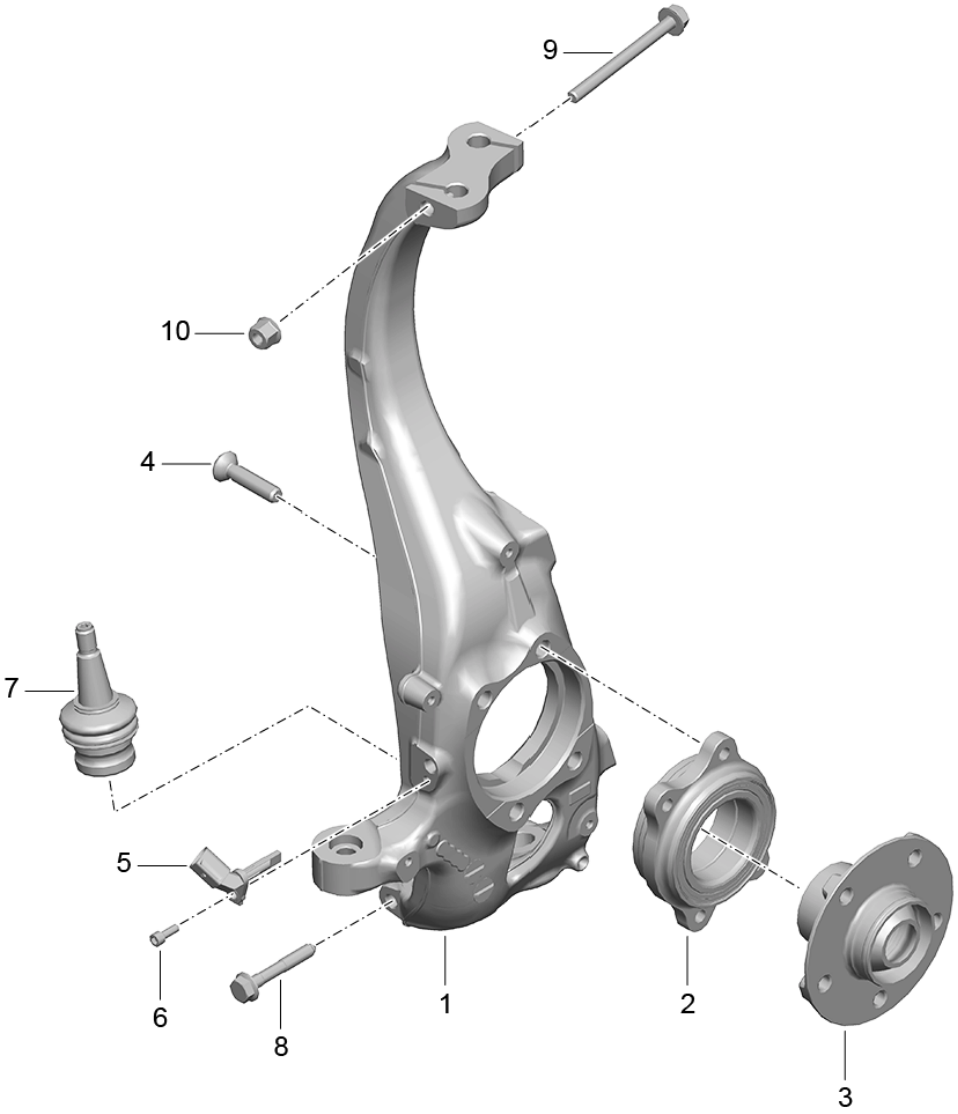

Model: 95B **Model life 2014>>**

Pos	Part Number	Description	Remark	Qty	Model
		Pivot bearing Wheel hub			
1	95B 407 253 A	Pivot bearing	/L -16	1	I1LA/1LE
1	95B 407 253 E	Pivot bearing	/L 17-	1	I1LA/1LE
(1)	95B 407 254 A	Pivot bearing	/R -16	1	I1LA/1LE
(1)	95B 407 254 E	Pivot bearing	/R 17-	1	I1LA/1LE
(1)	95B 407 253 B	Pivot bearing	/L -16	1	I1LB/1LF/1LG I1LY/1ZK
(1)	95B 407 253 F	Pivot bearing	/L 17-	1	I1LB/1LF/1LG I1LY/1ZK
(1)	95B 407 254 B	Pivot bearing	/R -16	1	I1LB/1LF/1LG I1LY/1ZK
(1)	95B 407 254 F	Pivot bearing	/R 17-	1	I1LB/1LF/1LG I1LY/1ZK
2	8K0 407 625 B	Angular-contact bearing		2	
3	8K0 407 613 B	Wheel hub		2	
4	WHT 000 237 B	Countersunk-head screw M12 X 1.5 X 45		8	
5	95B 927 803	Speed sensor	/L	1	
(5)	95B 927 804	Speed sensor	/R	1	
6	N 014 740 11	Pan-head screw M6 X 16		2	
7	4G0 407 689 C	Bearing		2	
8	N 101 973 04	Hexagon-head bolt BM10 X 65		2	
9	N 107 709 01	Hexagon-head bolt M10 X 110		2	
10	N 102 723 02	Hexagon nut M10		2	
-	G 052 778 A2	Grease Spraying can 25 ML		1	

Illustration: 401-20

PORSCHE

Model: 95B **Model life 2014>>**

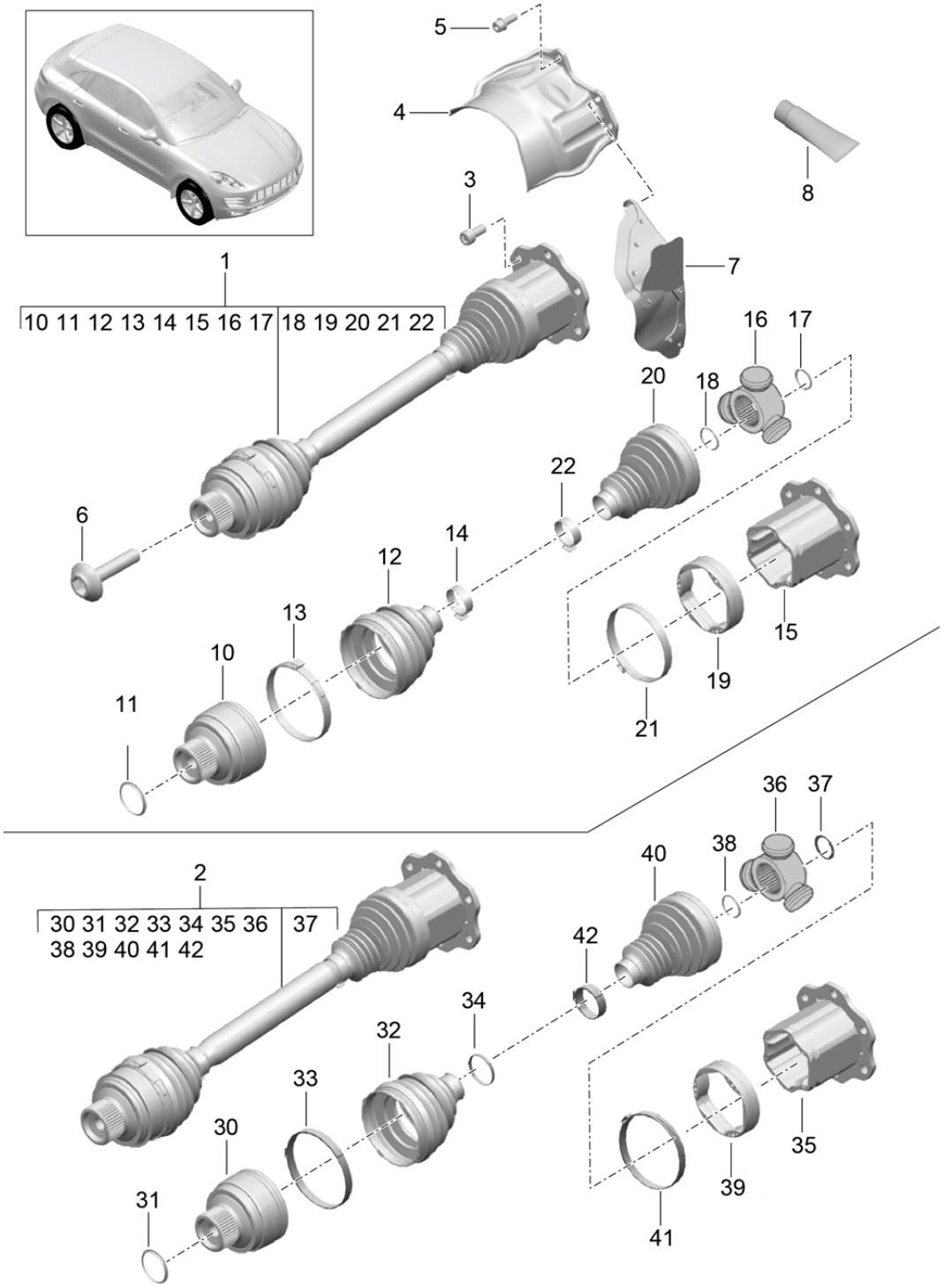

Model: 95B **Model life 2014>>**

Pos	Part Number	Description	Remark	Qty	Model
		Drive shaft see GR. 4 NR. SY1615			
1	95B 407 271 A	Drive shaft see GR. 4 NR. SY1615		2	
1	95B 407 271 B	Drive shaft see GR. 4 NR. SY1615 F >>95HLB 70673 F >>A5HLB 60182		2	MCT.LA
2	95B 407 271 C	Drive shaft see GR. 4 NR. SY1615		2	
2		Drive shaft F 95HLB 70674>> F A5HLB 60183>>		2	MCT.LA
3	N 904 411 03	Multiple-tooth screw M 10 X 20		12	
4	8K0 407 719	Heat shield Left	/L	1	IDU0/DU1/D4A
(4)	8K0 407 720	Heat shield Right	/R	1	
5	N 904 154 05	Combination screw M8X22		6	
6	8E0 407 643 A	Hexagon-head bolt M16X72		2	
7	4G0 903 445	Protection plate		1	ID43/D51
8	000 043 110 02	Grease Joint Outer 1 TUBE 100 GR.		X	
(8)	000 043 110 03	Grease Joint Inner 1 TUBE 110 GR.		X	
1	95B 407 271 A	Drive shaft see GR. 4 NR. SY1615		2	
10	8K0 407 305 M	Constant-velocity joint Outer		2	
11	N 911 811 01	Circlip Joint Outer		2	
12	8K0 407 285 E	Bellows Outer		2	
13	N 107 502 01	Hose clamp Bellows Outer 89.5X10X1		2	
14	N 107 286 01	Hose clamp Bellows Outer 33X10X0.8		2	
15	8K0 407 341 B	Lid Joint Inner		2	
16	95B 407 363	Joint Inner		2	
17	N 911 458 01	Circlip Joint Inner 23X1.2		2	

Model: 95B **Model life 2014>>**

Pos	Part Number	Description	Remark	Qty	Model
18	N 911 460 01	Circlip Joint Inner 24.5X1.5		2	
19	8K0 407 413	Adapter Joint Inner		2	
20	8K0 407 283 B	Bellows Inner		2	
21	N 909 411 01	Hose clamp Bellows Inner 91X10X1		2	
22	N 107 149 01	Hose clamp Bellows Inner 32.5X10X0.8		2	
2	95B 407 271 C	Drive shaft see GR. 4 NR. SY1615		2	
30	9A7 407 305 00	Constant-velocity joint Outer		2	
31	N 911 705 01	Circlip Joint Outer 27,79		2	
32	9A7 407 285 00	Bellows Outer		2	
33	N 107 401 01	Hose clamp Bellows Outer 95,4X10X1		2	
34	N 107 402 01	Hose clamp Bellows Outer 35,5X10X0,8		2	
35	95B 407 341	Lid Joint Inner		2	
36	95B 407 363 A	Joint Inner		2	
37	N 908 345 01	Circlip Joint Inner 23,2		2	
38	N 911 169 01	Circlip Joint Inner 25,9		2	
39	9A7 407 413 00	Adapter Joint Inner		2	
40	9A7 407 283 00	Bellows Inner		2	
41	N 106 721 01	Hose clamp Bellows Inner 94X10X1		2	
42	N 106 148 01	Hose clamp Bellows Inner 34X10X0.8		2	

Illustration: 402-00

PORSCHE

Model: 95B **Model life 2014>>**

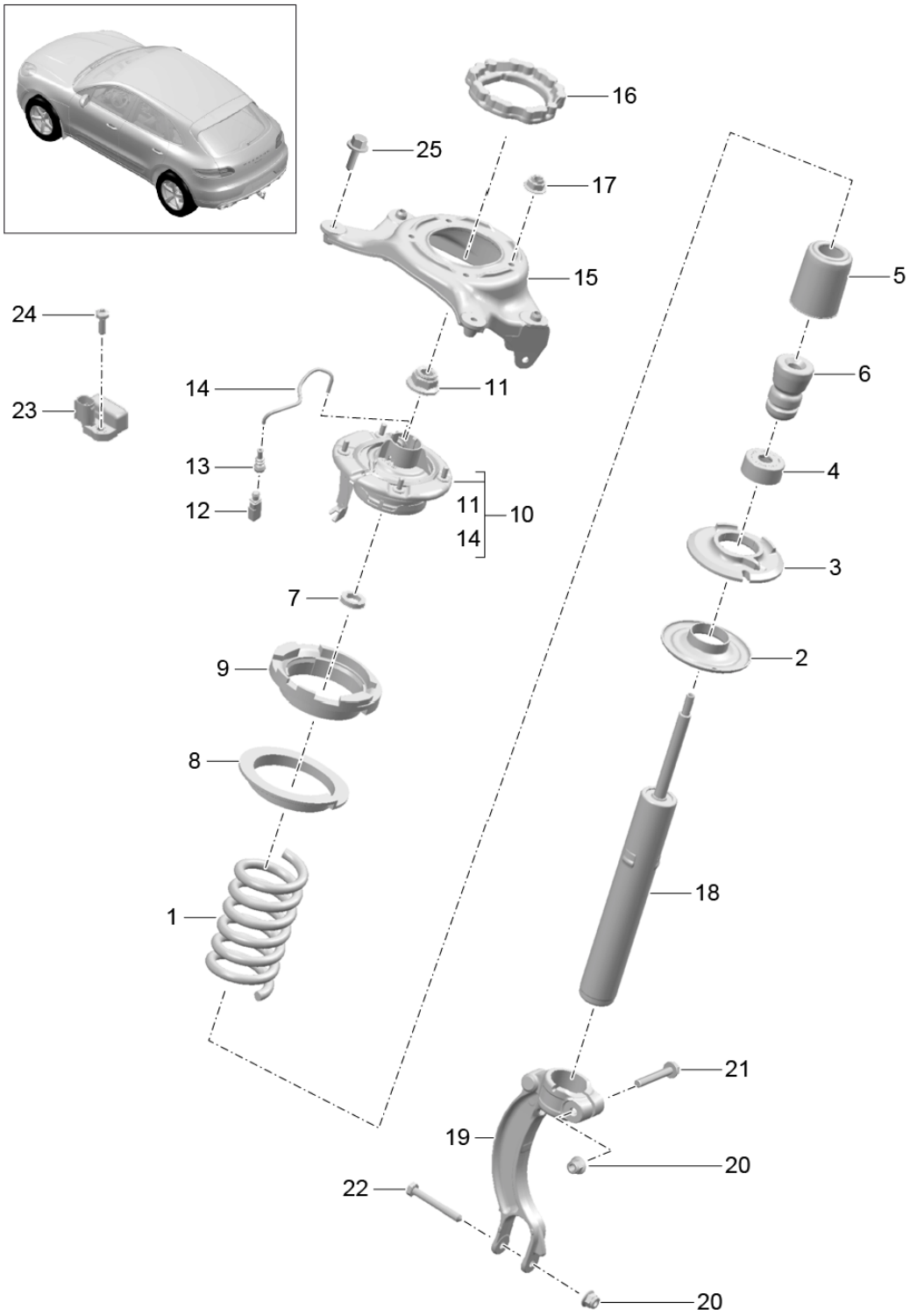

Model: 95B **Model life 2014>>**

Pos	Part Number	Description	Remark	Qty	Model
		suspension Steel Shock absorber strut			I1BA/1BH
1	95B 411 105 AC 95B 411 105 AC 504	Coil spring Set Identification Silver Green		1	I0JA/1BA
(1)	95B 411 105 AD 95B 411 105 AD 504	Coil spring Set Identification Silver Blue		1	I0JB/1BA
(1)	95B 411 105 AE 95B 411 105 AE 504	Coil spring Set Identification Silver Orange		1	I0JC/1BA
(1)	95B 411 105 AF 95B 411 105 AF 504	Coil spring Set Identification Silver Brown		1	I0JD/0JE/1BA
(1)	95B 411 105 AG 95B 411 105 AG 504	Coil spring Set Identification Silver Red		1	I0JF/0JG/1BA
(1)	95B 411 105 AH 95B 411 105 AH 504	Coil spring Set Identification Silver Dark red		1	I0JH/0JJ/0JK I1BA
(1)	95B 411 105 AK 95B 411 105 AK 504	Coil spring Set Identification Yellow Silver		1	I0JA/1BH
(1)	95B 411 105 AL 95B 411 105 AL 504	Coil spring Set Identification Yellow Green		1	I0JB/1BH
(1)	95B 411 105 AM 95B 411 105 AM 504	Coil spring Set Identification Yellow Blue		1	I0JC/1BH
(1)	95B 411 105 AN 95B 411 105 AN 504	Coil spring Set Identification Yellow Orange		1	I0JD/1BH
(1)	95B 411 105 AP 95B 411 105 AP 504	Coil spring Set Identification Yellow Brown		1	I0JE/0JF/1BH
(1)	95B 411 105 AQ 95B 411 105 AQ 504	Coil spring Set Identification Yellow		1	I0JG/0JH/1BH

Model: 95B **Model life 2014>>**

Pos	Part Number	Description	Remark	Qty	Model
		Red			
(1)	95B 411 105 AR	Coil spring		1	-IE0W/I0JJ I1BH
	95B 411 105 AR 504	Set Identification Yellow Dark red			
(1)	95B 411 105 AS	Coil spring		1	-IE0W/I0JK I1BH
	95B 411 105 AS 504	Set Identification Yellow Dark blue			
(1)	95B 411 105 BA	Coil spring		1	IE0W/0JJ/1BH
	95B 411 105 BA 504	Set Identification Silver Yellow			
(1)	95B 411 105 BB	Coil spring		1	IE0W/0JK/1BH
	95B 411 105 BB 504	Set Identification Silver Blue			
2	8K0 412 103 C	Concave washer Lower		2	
3	8K0 412 109 A	Concave support		2	
4	95B 412 127	Protection cap		2	
5	8K0 412 137 A	Boot		2	I1BA
(5)	95B 412 137	Boot		2	I1BH
6	95B 412 131 D	Rubber stop		2	-IE0W/I1BH
(6)	95B 412 131 C	Rubber stop		2	I1BA
(6)	95B 412 131 E	Rubber stop		2	IE0W/1BH
7	WHT 001 484	Washer		2	
8	95B 412 109	Concave support		2	I1BH
9	95B 411 178	Shim		2	I1BH
10	95B 412 321	Concave support with Mounting for absorber		2	I1BH
(10)	8K0 412 377 C	Bearing Upper		2	I1BA
11	999 084 458 01	Hexagon nut M12 X 1.5		2	I1BH
(11)	N 101 064 02	Hexagon nut M12 X 1.5		2	I1BA
12	1J0 973 802	Connector housing		2	I1BH
13	1J0 906 102	Protection cap		2	I1BH
14	95B 972 869	Cable guide		2	I1BH
15	95B 412 383	Bearing bracket	/L	1	I1BH
(15)	95B 412 384	Bearing bracket	/R	1	I1BH
(15)	8R0 412 391 A	Bearing bracket	/L	1	I1BA
(15)	8R0 412 392 A	Bearing bracket	/R	1	I1BA
16	95B 412 081	Sealing ring		2	I1BH
17	999 084 657 01	Hexagon nut M 8		8	I1BH
18	95B 413 031 A	Shock absorber strut		2	I1BH
(18)	95B 413 031 D	Shock absorber strut		2	I1BA
19	8K0 413 037 L	Shock absorber Fork	/L	1	
(19)	8K0 413 038 L	Shock absorber Fork	/R	1	
20	N 101 064 02	Hexagon nut		4	

Model: 95B **Model life 2014>>**

Pos	Part Number	Description	Remark	Qty	Model
		M12 X 1.5			
21	N 104 213 04	Combination screw M12 X 1.5 X 80		2	
22	N 102 412 02	Hexagon-head bolt M12 X 1.5 X 85		2	
23	95B 907 508	Acceleration sensor		1	I1BH
24	N 101 961 03	Oval-head screw M6X18		1	I1BH
25	N 911 523 01	Hexagon-head bolt M10X35		8	
-		Control unit See illustrations 5/02/00		1	I1BH

Illustration: 402-05

PORSCHE

Model: 95B **Model life 2014>>**

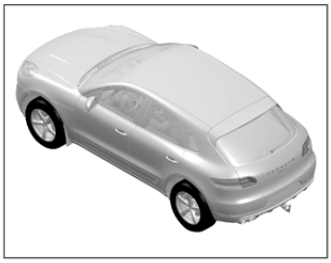

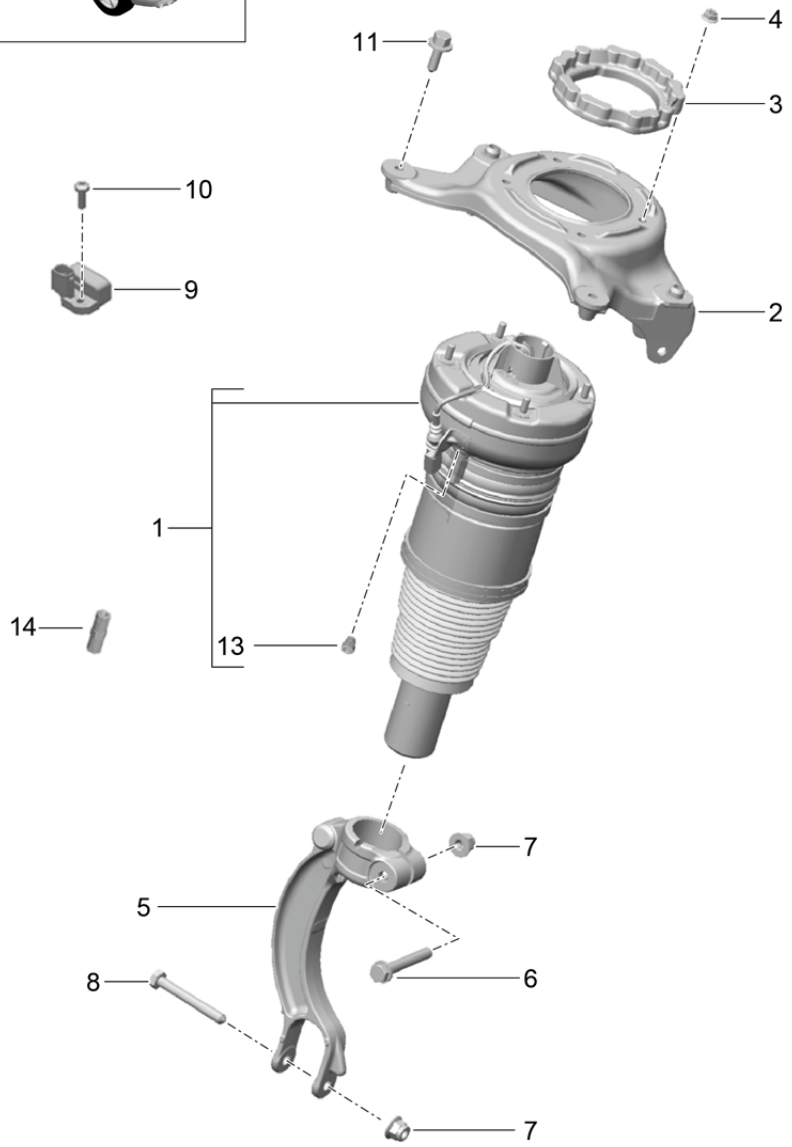

Model: 95B **Model life 2014>>**

Pos	Part Number	Description	Remark	Qty	Model
		Air spring Shock absorber strut			I1BK
1	95B 616 039	Air spring Damper		2	-IE0W
(1)	95B 616 039 A	Air spring Damper		2	IE0W
2	95B 412 383	Bearing bracket	/L	1	
(2)	95B 412 384	Bearing bracket	/R	1	
3	95B 412 081	Sealing ring		2	
4	999 084 657 01	Hexagon nut M 8		8	
5	8K0 413 037 L	Shock absorber Fork	/L	1	
(5)	8K0 413 038 L	Shock absorber Fork	/R	1	
6	N 104 213 04	Combination screw M12 X 1.5 X 80		2	
7	N 101 064 02	Hexagon nut M12 X 1,5		4	
8	N 102 412 02	Hexagon-head bolt		2	
9	95B 907 508	Acceleration sensor		1	
10	N 101 961 03	Oval-head screw M6X18		1	
11	N 911 523 01	Hexagon-head bolt M10X35		8	
13	955 358 541 00	Push-on connector Air tube		2	
14	955 358 910 00	Push-on connector		2	
-		Control unit See illustrations 6/06/00		1	

Illustration: 402-10

PORSCHE

Model: 95B **Model life 2014>>**

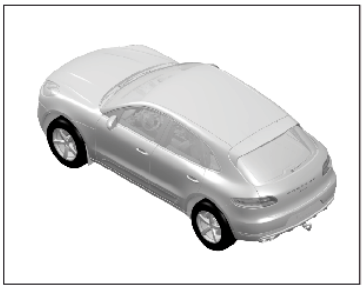

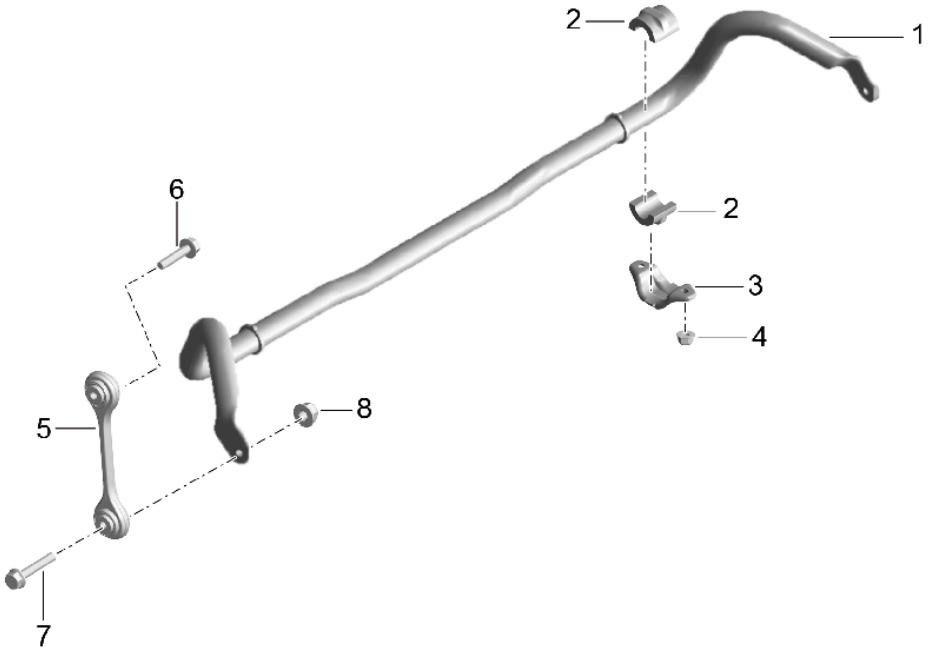

Illustration: 402-10

PORSCHE

Model: 95B **Model life 2014>>**

Pos	Part Number	Description	Remark	Qty	Model
		Stabiliser			
1	95B 411 309 A	Stabiliser		1	IDM0
(1)	95B 411 309 C	Stabiliser		1	IDD7/D1V/D43 ID51
(1)	95B 411 309 E	Stabiliser		1	IDU0/DU1
2	95B 411 035	Stabiliser mounting		4	IDU0/DU1
(2)	4D0 411 327 J	Stabiliser mounting		2	IDD7/DM0/D1V ID43/D51
3	95B 411 336	Clip		2	IDU0/DU1
(3)	4D0 411 336 G	Clip		2	IDD7/DM0/D1V ID43/D51
4	N 104 355 06	Hexagon nut M 8		4	
5	4G0 411 317 A	Stabiliser mounting		2	
6	N 106 999 01	Hexagon-head bolt M 10 X 45		2	
7	N 105 707 02	Hexagon-head bolt AM 10 X 60		2	
8	N 102 861 10	Hexagon nut M10		2	

Illustration: 403-00

PORSCHE

Model: 95B **Model life 2014>>**

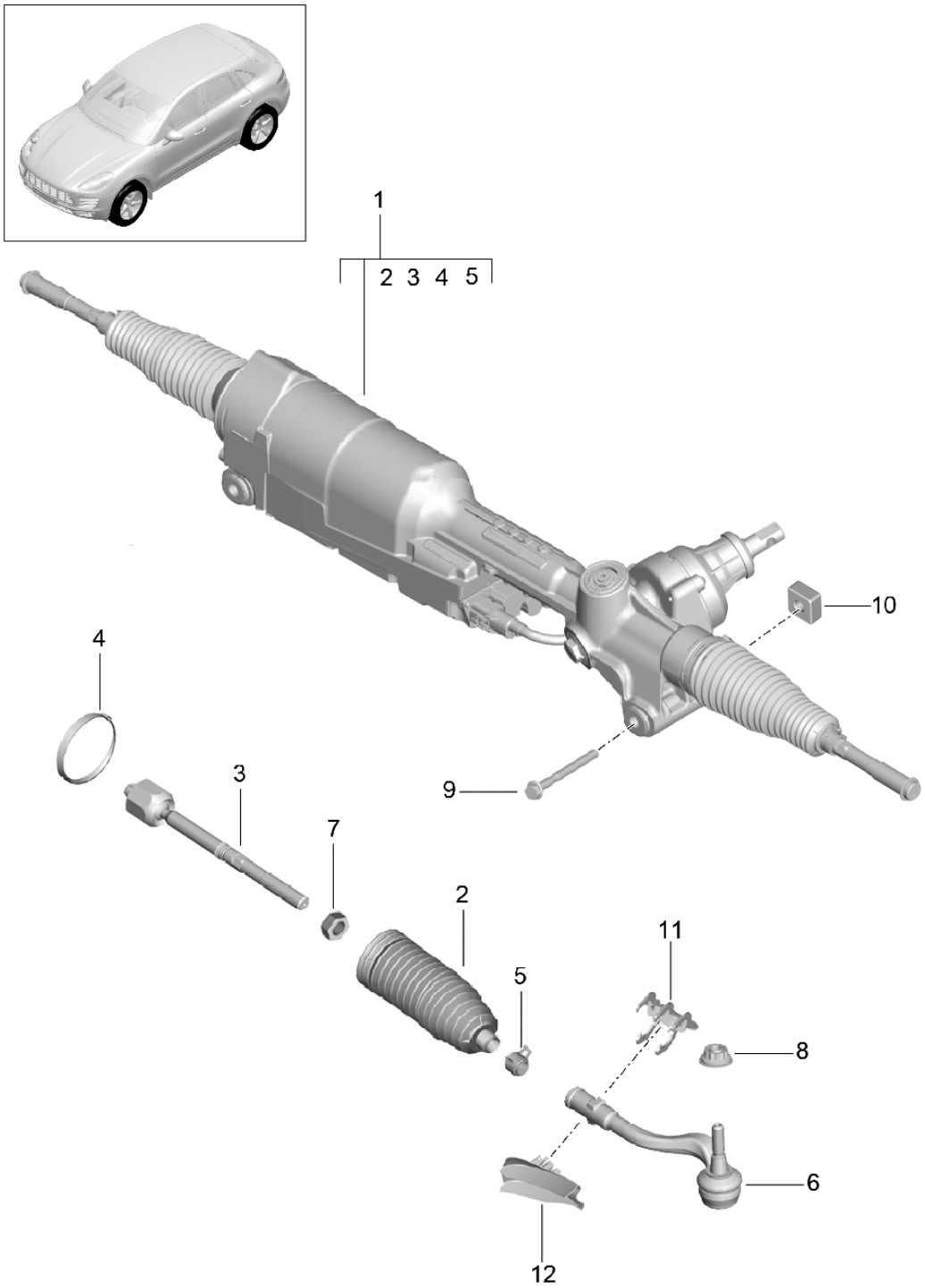

Model: 95B **Model life 2014>>**

Pos	Part Number	Description	Remark	Qty	Model
		Steering gear			
		Steering parts			
1	95B 423 055 K	Steering gear		1	IL0L
(1)	95B 423 055 AC	Steering gear		1	IL0L
(1)	95B 423 055 L	Steering gear		1	IL0R
(1)	95B 423 055 AD	Steering gear		1	IL0R
2	4G0 423 831	Boot		1	
		Driver's side			
(2)	4G0 423 832 A	Boot		1	
		Passenger's side			
3	4G0 423 810 A	Joint		2	
4	N 104 344 02	Hose clamp	/R	1	
		Right			
		59X7X0,6			
(4)	N 107 660 02	Hose clamp	/L	1	
		Left			
		85X7X0,8			
5	4G0 423 875	Clip		2	
6	4G0 423 811 A	Track rod		1	
		Left			
(6)	4G0 423 812 A	Track rod		1	
		Right			
7	N 011 164 18	Hexagon nut		2	
		M 16 X 1,5			
8	WHT 004 593	12-point nut		2	
		M12X1,5			
9	WHT 005 514	Combination screw		2	
		M12 X 1,5 X 153			
10	WHT 002 305	Square nut		2	
		M 12 X 1,5			
11	95B 699 011 B	Clamp		2	IDU0/DU1
12	95B 615 447 A	Air baffle plate	/L	2	IDU0/DU1
		Left			
(12)	95B 615 448 A	Air baffle plate	/R	2	IDU0/DU1
		Right			

Illustration: 403-05

PORSCHE

Model: 95B **Model life 2014>>**

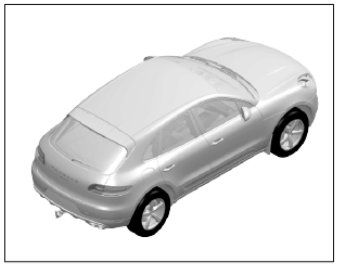

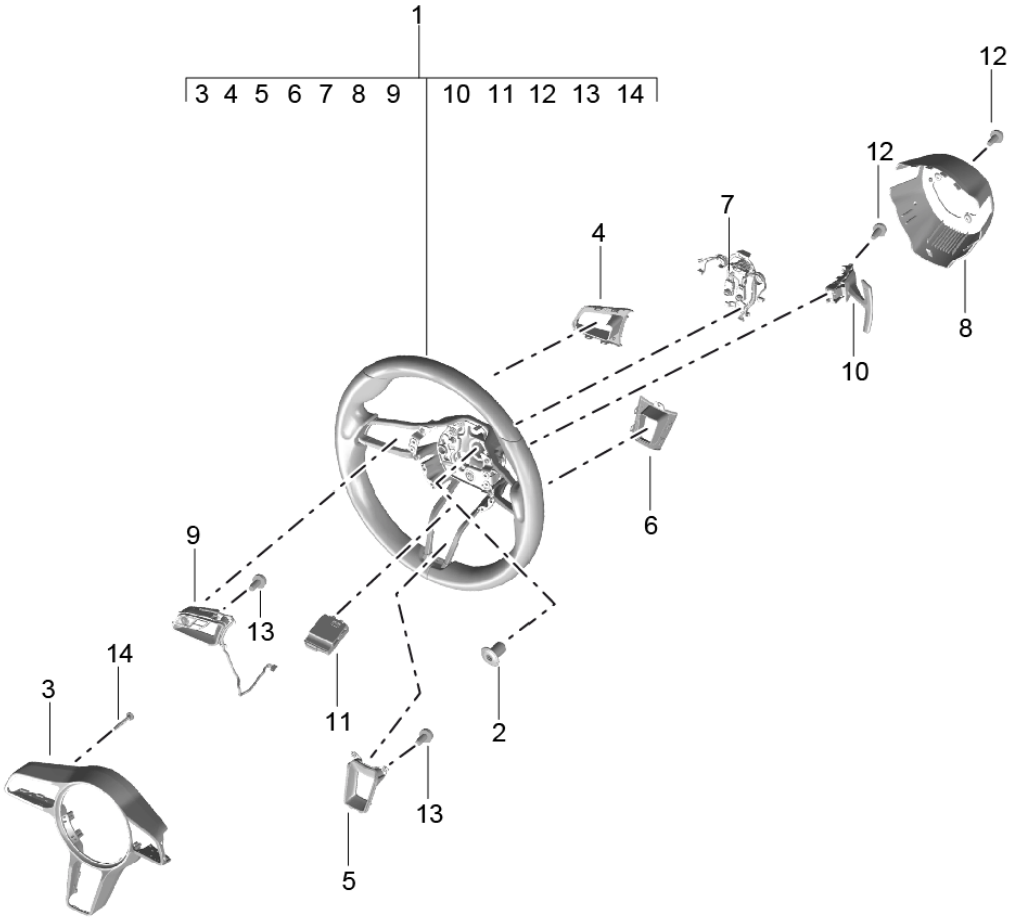

Model: 95B **Model life 2014>>**

Pos	Part Number	Description	Remark	Qty	Model
		Steering wheels			
1	95B 419 091 N	Steering wheel	-16	1	I2ZM
	95B 419 091 N A34	Black			+VC,+VJ,+VF,
					+VI,+VU,+VK
					+VO,+VX,+VZ
	95B 419 091 N OE5	Agate Grey			+VD,+VG,+VL
					+VQ
	95B 419 091 N 6H6	Espresso			+VR
	95B 419 091 N OK6	Saddle Tan			+VN,+VP
	95B 419 091 N 9J9	Luxor Beige			+VE,+VH,+VM
1	95B 419 091 AJ	Steering wheel	17-	1	I2ZM
	95B 419 091 AJ A34	Black			+FA,+FL,+FE,
					+FF,+FN,+FK,
					+TR,+TS,
					+VC,+VJ,+VF,
					+VI,+VU,+VK
					+VO,+VX,+VZ
	95B 419 091 AJ OE5	Agate Grey			+FB,+FM,
					+VD,+VG,+VL
					+VQ
	95B 419 091 AJ 6H6	Espresso			+VR
	95B 419 091 AJ OK6	Saddle Tan			+FI,
					+VN,+VP
	95B 419 091 AJ 9J9	Luxor Beige			+FC,+FH,
					+VE,+VH,+VM
(1)	95B 419 091 P	Steering wheel	-16	1	I2ZH
	95B 419 091 P A34	Black			+VC,+VJ,+VF,
					+VI,+VU,+VK
					+VO,+VX,+VZ
	95B 419 091 P OE5	Agate Grey			+VD,+VG,+VL
					+VQ
	95B 419 091 P 6H6	Espresso			+VR
	95B 419 091 P OK6	Saddle Tan			+VN,+VP
	95B 419 091 P 9J9	Luxor Beige			+VE,+VH,+VM
(1)	95B 419 091 AK	Steering wheel	17-	1	I2ZH
	95B 419 091 AK A34	Black			+FA,+FL,+FE,
					+FF,+FN,+FK,
					+TR,+TS,
					+VC,+VJ,+VF,
					+VI,+VU,+VK
					+VO,+VX,+VZ
	95B 419 091 AK OE5	Agate Grey			+FB,+FM,
					+VD,+VG,+VL
					+VQ
	95B 419 091 AK 6H6	Espresso			+VR
	95B 419 091 AK OK6	Saddle Tan			+FI,
					+VN,+VP
	95B 419 091 AK 9J9	Luxor Beige			+FC,+FH,
					+VE,+VH,+VM
(1)	95B 419 091 Q	Steering wheel	-16	1	I2FX
	95B 419 091 Q A34	Black			+VC,+VJ,+VF,
					+VI,+VU,+VK
					+VO,+VX,+VZ
	95B 419 091 Q OE5	Agate Grey			+VD,+VG,+VL
					+VQ
	95B 419 091 Q 6H6	Espresso			+VR
	95B 419 091 Q OK6	Saddle Tan			+VN,+VP
	95B 419 091 Q 9J9	Luxor Beige			+VE,+VH,+VM
(1)	95B 419 091 AL	Steering wheel	17-	1	I2FX
	95B 419 091 AL A34	Black			+FA,+FL,+FE,
					+FF,+FN,+FK,
					+TR,+TS,
					+VC,+VJ,+VF,

Model: 95B **Model life 2014>>**

Pos	Part Number	Description	Remark	Qty	Model
					+VI,+VU,+VK
					+VO,+VX,+VZ
	95B 419 091 AL OE5	Agate Grey			+FB,+FM,
					+VD,+VG,+VL
					+VQ
	95B 419 091 AL 6H6	Espresso			+VR
	95B 419 091 AL OK6	Saddle Tan			+FI,
					+VN,+VP
	95B 419 091 AL 9J9	Luxor Beige			+FC,+FH,
					+VE,+VH,+VM
(1)	95B 419 091 R	Steering wheel	-16	1	I1XG
	95B 419 091 R A34	Black			+VC,+VJ,+VF,
					+VI,+VU,+VK
					+VO,+VX,+VZ
	95B 419 091 R OE5	Agate Grey			+VD,+VG,+VL
					+VQ
	95B 419 091 R 6H6	Espresso			+VR
	95B 419 091 R OK6	Saddle Tan			+VN,+VP
	95B 419 091 R 9J9	Luxor Beige			+VE,+VH,+VM
(1)	95B 419 091 AM	Steering wheel	17-	1	I1XG
	95B 419 091 AM A34	Black			+FA,+FL,+FE,
					+FF,+FN,+FK,
					+VC,+VJ,+VF,
					+VI,+VU,+VK
					+VO,+VX,+VZ
	95B 419 091 AM OE5	Agate Grey			+FB,+FM,
					+VD,+VG,+VL
					+VQ
	95B 419 091 AM 6H6	Espresso			+VR
	95B 419 091 AM OK6	Saddle Tan			+FI,
					+VN,+VP
	95B 419 091 AM 9J9	Luxor Beige			+FC,+FH,
					+VE,+VH,+VM
(1)	95B 419 091 S	Steering wheel	-16	1	I1XA
	95B 419 091 S A34	Black			+VC,+VJ,+VF,
					+VI,+VU,+VK
					+VO,+VX,+VZ
	95B 419 091 S OE5	Agate Grey			+VD,+VG,+VL
					+VQ
	95B 419 091 S 6H6	Espresso			+VR
	95B 419 091 S OK6	Saddle Tan			+VN,+VP
	95B 419 091 S 9J9	Luxor Beige			+VE,+VH,+VM
(1)	95B 419 091 AN	Steering wheel	17-	1	I1XA
	95B 419 091 AN A34	Black			+FA,+FL,+FE,
					+FF,+FN,+FK,
					+VC,+VJ,+VF,
					+VI,+VU,+VK
					+VO,+VX,+VZ
	95B 419 091 AN OE5	Agate Grey			+FB,+FM,
					+VD,+VG,+VL
					+VQ
	95B 419 091 AN 6H6	Espresso			+VR
	95B 419 091 AN OK6	Saddle Tan			+FI,
					+VN,+VP
	95B 419 091 AN 9J9	Luxor Beige			+FC,+FH,
					+VE,+VH,+VM
(1)	95B 419 091 T	Steering wheel	-16	1	I2PX
		Alcantara			
	95B 419 091 T 2W0	Black			
(1)	95B 419 091 AG	Steering wheel	-16	1	I2ZF
		Alcantara			
	95B 419 091 AG 2W0	Black			
(1)	95B 419 091 AP	Steering wheel	17-	1	I2ZF

Model: 95B **Model life 2014>>**

Pos	Part Number	Description	Remark	Qty	Model
		Alcantara			
	95B 419 091 AP 2W0	Black			
2	N 910 207 01	Screw		1	
		M 18 X 1,5 X 26			
3	95B 419 732	Cover		1	
	95B 419 732 GT8	Galvano silver			
4	95B 419 937	Cover	/L	1	
		Rear			
		Left			
	95B 419 937 6N3	Black mat			
(4)	95B 419 936	Cover	/R	1	
		Rear			
		Right			
	95B 419 936 6N3	Black mat			
5	95B 419 938 D	Cover		1	
		Front			
		Lower			
	95B 419 938 D 6N3	Black mat			
6	95B 419 938 B	Cover		1	I2ZM
		Rear			
		Lower			
	95B 419 938 B 6N3	Black mat			
(6)	95B 951 527	Cover		1	I1XA/1XG/2FX
					I2ZH
		Rear			
		Lower			
	95B 951 527 6N3	Black mat			
7	95B 971 388 B	Wiring harness		1	
8	95B 419 798 D	Cover		1	I2ZH/2ZM
		Rear			
		Plastic material			
	95B 419 798 D 5Q0	Black			
(8)	95B 419 798 E	Cover		1	I1XA/1XG/2FX
		Rear			
		Leather			
	95B 419 798 E A34	Black			
9	95B 998 537	Set		1	
		Switch			
		Multi-functional unit			
		Black mat			
10	95B 998 540 A	Set		1	
		Shifting paddle			
		Galvano silver			
11	95B 959 256	Control unit		1	
12	N 107 524 01	Screw		5	
		M4X10			
13	999 919 304 01	Screw		6	
		M3X8			
14	999 919 305 01	Screw		4	
		M4X30			

Illustration: 403-06

PORSCHE

Model: 95B **Model life 2014>>**

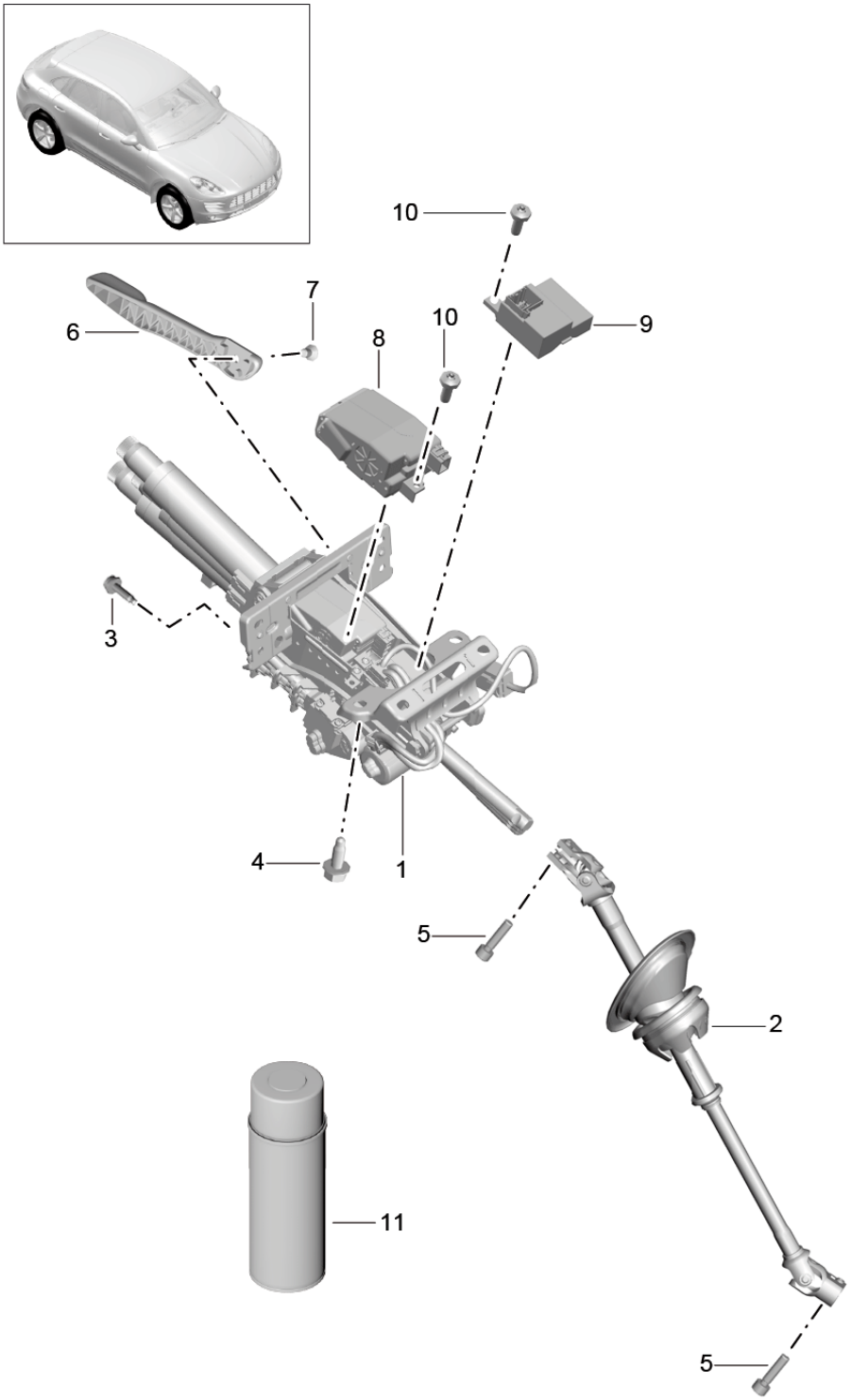

Model: 95B **Model life 2014>>**

Pos	Part Number	Description	Remark	Qty	Model
		Steering column Intermed. steering shaft			
1	95B 419 506 A	Steering column		1	-IB0D/-IB0E I0RC/2C4
(1)	95B 419 506 S	Steering column		1	-IB0D/-IB0E I0RC/2C4
(1)	95B 419 506 H	Steering column		1	-IB0D/-IB0E I0RZ/2C4
(1)	95B 419 506 AA	Steering column		1	-IB0D/-IB0E I0RZ/2C4
(1)	95B 419 506 L	Steering column		1	-IB0D/-IB0E I0RC/2C5
(1)	95B 419 506 P	Steering column		1	-IB0D/-IB0E I0RC/2C5
(1)	95B 419 506 N	Steering column		1	-IB0D/-IB0E I0RZ/2C5
(1)	95B 419 506 R	Steering column		1	-IB0D/-IB0E I0RZ/2C5
2	95B 419 753	Intermed. steering shaft see Technical information GR. 4 NR. SY1714 When required order also: 999.917.828.00	/LL	1	IL0L
(2)	95B 419 753 A	Intermed. steering shaft see Technical information GR. 4 NR. SY1714 When required order also: 999.917.828.00	/RL	1	IL0R
3	N 106 447 01	Pan-head screw M8X30		2	
4	N 019 526 9	Hexagon-head bolt M8X22		2	
5	N 105 184 05	Multiple-tooth screw M8X30		2	
6	4G0 419 378 C	Handle		1	I2C5
7	N 107 393 01	Oval-head screw		1	I2C5
8	7PP 905 852 C	Control unit		1	I0RC
9	4H0 907 705 K	Control unit		1	I2C4
10	8E0 035 413	Screw		2	
11	999 917 828 00	Grease Spray bottle see Technical information GR. 4 NR. SY1714		X	

Illustration: 501-00

PORSCHE

Model: 95B **Model life 2014>>**

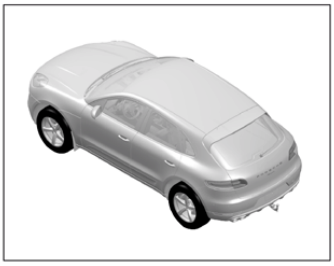

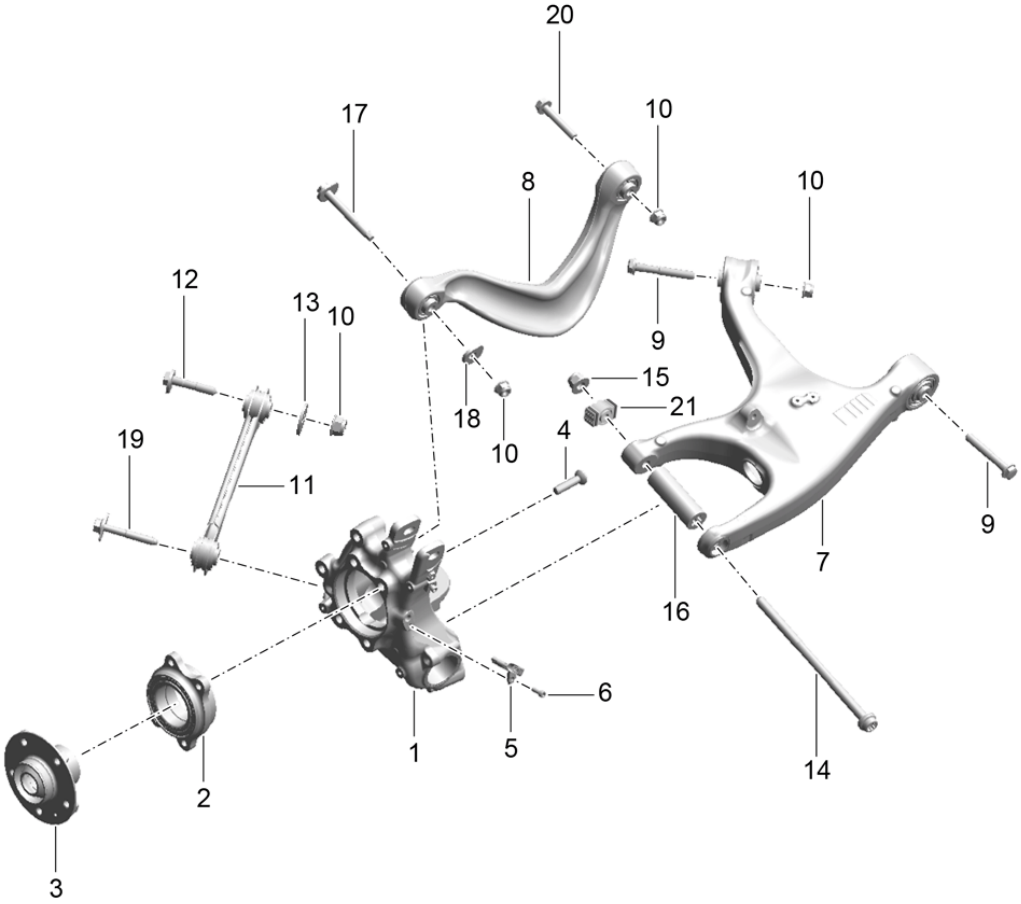

Model: 95B **Model life 2014>>**

Pos	Part Number	Description	Remark	Qty	Model
		Rear axle			
		Wheel carrier			
		Wheel hub			
		Wishbone			
		Track rod			
1	95B 505 431 Y	Wheel carrier	/L	1	
(1)	95B 505 432 Y	Wheel carrier	/R	1	
2	8K0 407 625 B	Angular-contact bearing		2	
3	8K0 407 613 B	Wheel hub		2	
4	WHT 000 237 A	Multiple-tooth screw		8	
		M12 X 1.5 X 45			
5	95B 927 803	Speed sensor	/R	1	
(5)	95B 927 804	Speed sensor	/L	1	
6	N 014 740 11	Pan-head screw		2	
		M6 X 16			
-	G 052 778 A2	Grease		1	
		Spraying can			
		25 ML			
7	8R0 505 311 F	Wishbone	/L	1	
		Lower			
(7)	8R0 505 312 F	Wishbone	/R	1	
		Lower			
8	8K0 505 323 H	Wishbone	/L	1	
		Upper			
(8)	8K0 505 324 H	Wishbone	/R	1	
		Upper			
9	WHT 002 479	Hexagon-head bolt		4	
		M12 X 1.5 X 87			
10	WHT 002 557	Hexagon nut		8	
		M12 X 1.5			
11	8K0 501 529 L	Track rod		2	
12	WHT 002 053	Eccentric screw		2	
		M12 X 1.5 X 65			
13	WHT 002 492	Eccentric washer		2	
		35X3			
14	WHT 003 818	Combination screw		2	
		M14 X 1.5 X 265			
		Wishbone			
		Lower			
15	N 104 018 01	Hexagon nut		2	
		M14 X 1.5			
		Wishbone			
		Lower			
16	8K0 505 139 F	Spacer tube		2	
		Wishbone			
		Lower			
17	WHT 000 228 A	Adjusting screw		2	
		M 12 X 1,5 X 100			
		Wishbone			
		Upper			
18	WHT 000 232 A	Adjusting shim		2	
		Wishbone			
		Upper			
19	WHT 002 059	Combination screw		2	
		M12 X 1.5 X 80.8			
		Track rod			
20	N 105 007 01	Combination screw		2	
		M12X1.5X70			
21	9A7 505 279 00	Bearing		2	
		Wheel carrier			

Illustration: 501-03

PORSCHE

Model: 95B **Model life 2014>>**

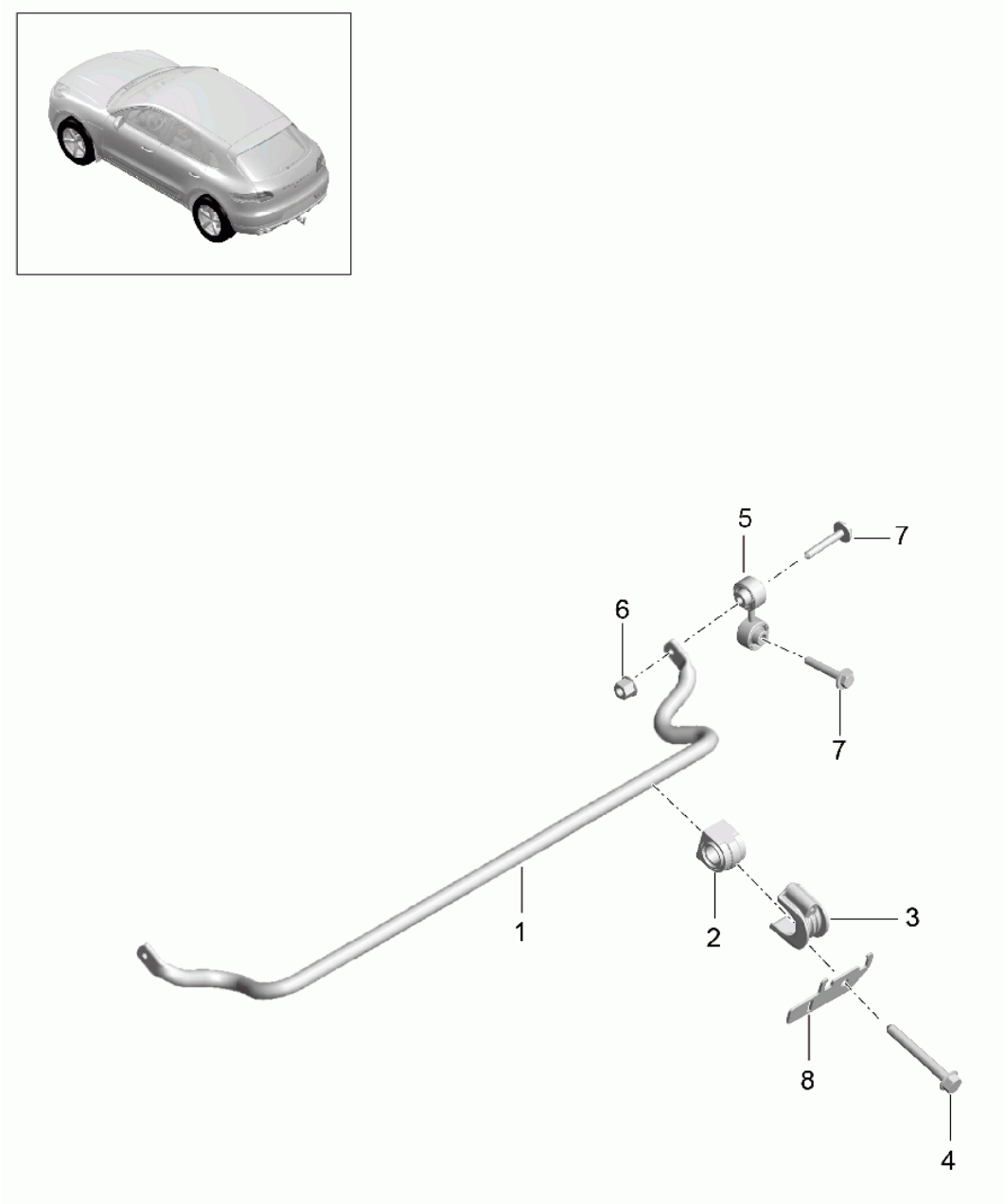

Illustration: 501-03

PORSCHE

Model: 95B **Model life 2014>>**

Pos	Part Number	Description	Remark	Qty	Model
		Stabiliser			
1	95B 511 305	Stabiliser		1	IDM0
(1)	95B 511 305 A	Stabiliser		1	IDD7/DU0/DU1 ID1V/D43/D51
2	95B 511 035	Stabiliser mounting		2	
3	95B 511 439	Clip		2	
4	N 106 957 01	Hexagon-head bolt M 8 X 56		4	
5	95B 505 465	Stabiliser mounting		2	
6	N 102 723 02	Hexagon nut M 10		2	
7	N 909 978 02	Combination screw M 10 X 65-TCX		4	
8	95B 907 324 A	Support Adapter Control unit Tyre pressure monitoring		1	

Illustration: 501-05

Model: 95B **Model life 2014>>**

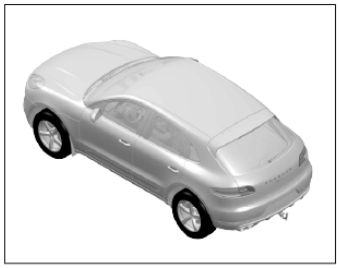

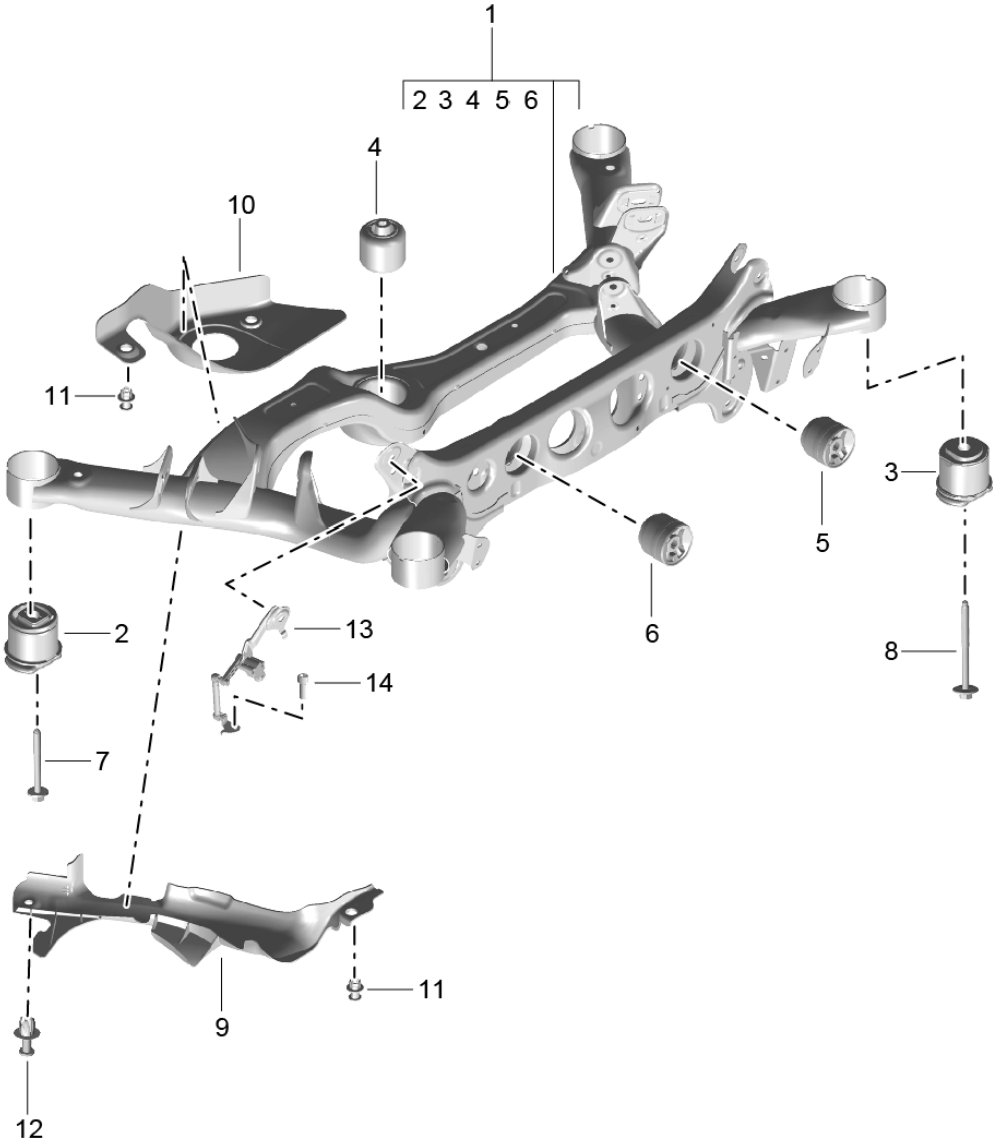

Model: 95B **Model life 2014>>**

Pos	Part Number	Description	Remark	Qty	Model
		Rear axle Suspension subframe Self-levelling sensor			
1	95B 505 235 B	Suspension subframe		1	
(1)	95B 505 235 C	Suspension subframe		1	
2	8R0 505 145 K	Bearing Suspension subframe Front		2	
3	8R0 505 145 A	Bearing Suspension subframe Rear		2	
4	95B 599 381	Bearing Rear axle differential Front		1	
(4)	95B 599 381 A	Bearing Rear axle differential Front		1	
5	8K0 599 257 P	Bearing Rear axle differential Rear	/L	1	
6	8K0 599 257 N	Bearing Rear axle differential Rear	/R	1	
7	N 909 763 02	Hexagon-head bolt M 14 X 1.5 X 135		2	
8	WHT 004 756	Hexagon-head bolt M 12 X 1.5 X 145		2	
9	8R0 505 413 A	Stone guard Suspension subframe Left		1	IDD7/DM0/DU0 IDU1/D1V/D43 ID51/6EC
(9)	8R0 505 414 A	Stone guard Suspension subframe Right		1	IDD7/DM0/DU0 IDU1/D1V/D43 ID51/6EC
(10)	8R0 505 565	Stone guard Suspension subframe Centre		1	IDD7/DM0/D1V ID43/D51/6EC
(10)	95B 505 565	Stone guard Suspension subframe Centre		1	IDU0/DU1/6EC
(10)	95B 505 565 A	Stone guard Suspension subframe Centre		1	IDU0/DU1/6EA
11	4F0 501 329 A	Clip		8	I6EC
(11)		Clip		2	IDU0/DU1/6EA
12	8K0 501 329	Clip		2	I6EC
13	8R0 941 309 B	Self-levelling sensor	/L	1	
(13)	8R0 941 310 E	Self-levelling sensor	/R	1	I1BH/1BK
14	N 014 740 11	Pan-head screw M6X16		1	

Illustration: 501-20

PORSCHE

Model: 95B **Model life 2014>>**

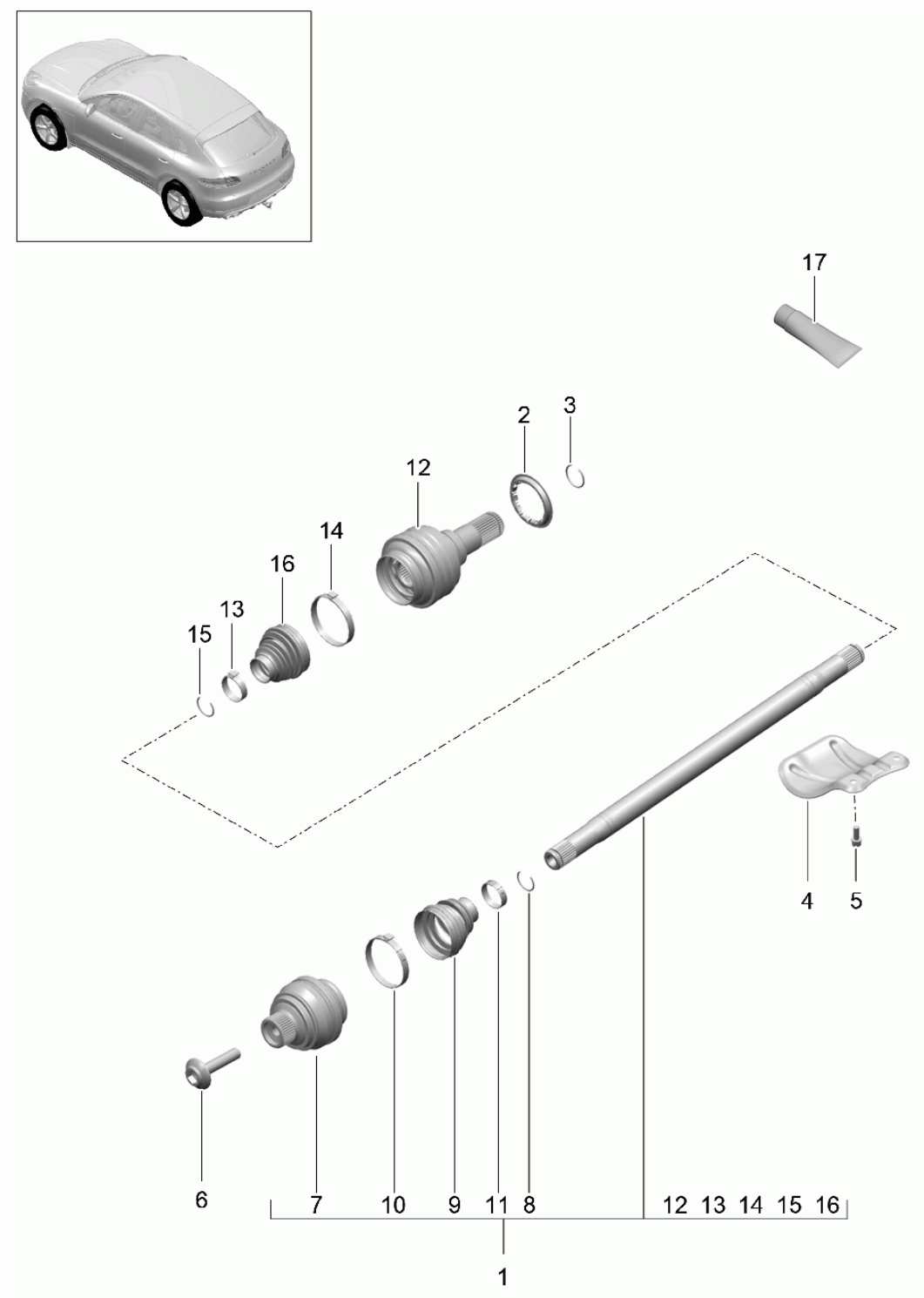

Model: 95B **Model life 2014>>**

Pos	Part Number	Description	Remark	Qty	Model
		Drive shaft			
1	95B 501 203	Drive shaft		2	IDD7/DU1/D1V ID43/D51/1Y0
(1)	95B 501 203 C	Drive shaft		2	IDM0/DU0/1Y0
(1)	95B 501 203 A	Drive shaft Left	/L	1	I1Y1
(1)	95B 501 203 B	Drive shaft Right	/R	1	I1Y1
2	7PP 501 811	Protective ring		2	
3	955 332 125 00	Circlip		2	
4	8K0 501 721 A	Heat shield		1	
5	N 106 649 01	Screw M8X16		2	
6	8E0 407 643 A	Hexagon-head bolt M16X227		2	
7	95B 501 305	Constant-velocity joint Outer		2	IDD7/DU1/D1V ID43/D51/1Y0
(7)		Constant-velocity joint Outer		2	I1Y1
(7)	95B 501 305 A	Constant-velocity joint Outer		2	IDM0/DU0/1Y0
8	N 911 891 01	Circlip Joint Outer		2	
9	95B 501 151	Bellows Outer		2	
10	N 106 015 01	Clamp Bellows Outer 74.5X10X1		2	
11	999 512 117 01	Clamp Bellows Outer 36.55		2	
12	95B 501 331	Joint Inner		2	IDD7/DU1/D1V ID43/D51/1Y0
(12)	95B 501 331 C	Joint Inner		2	IDM0/DU0/1Y0
(12)	95B 501 331 A	Joint Inner Left	/L	1	I1Y1
(12)	95B 501 331 B	Joint Inner Right	/R	1	I1Y1
13	999 512 068 01	Clamp Bellows Inner 35.80		2	
14	N 106 015 01	Clamp Bellows Inner 74.5X10X1		2	
15	N 911 891 01	Circlip Joint Inner		2	
16	95B 501 151	Bellows Inner		2	
17	000 043 110 02	Grease 1 TUBE 100 GR.		X	

Illustration: 502-00

PORSCHE

Model: 95B **Model life 2014>>**

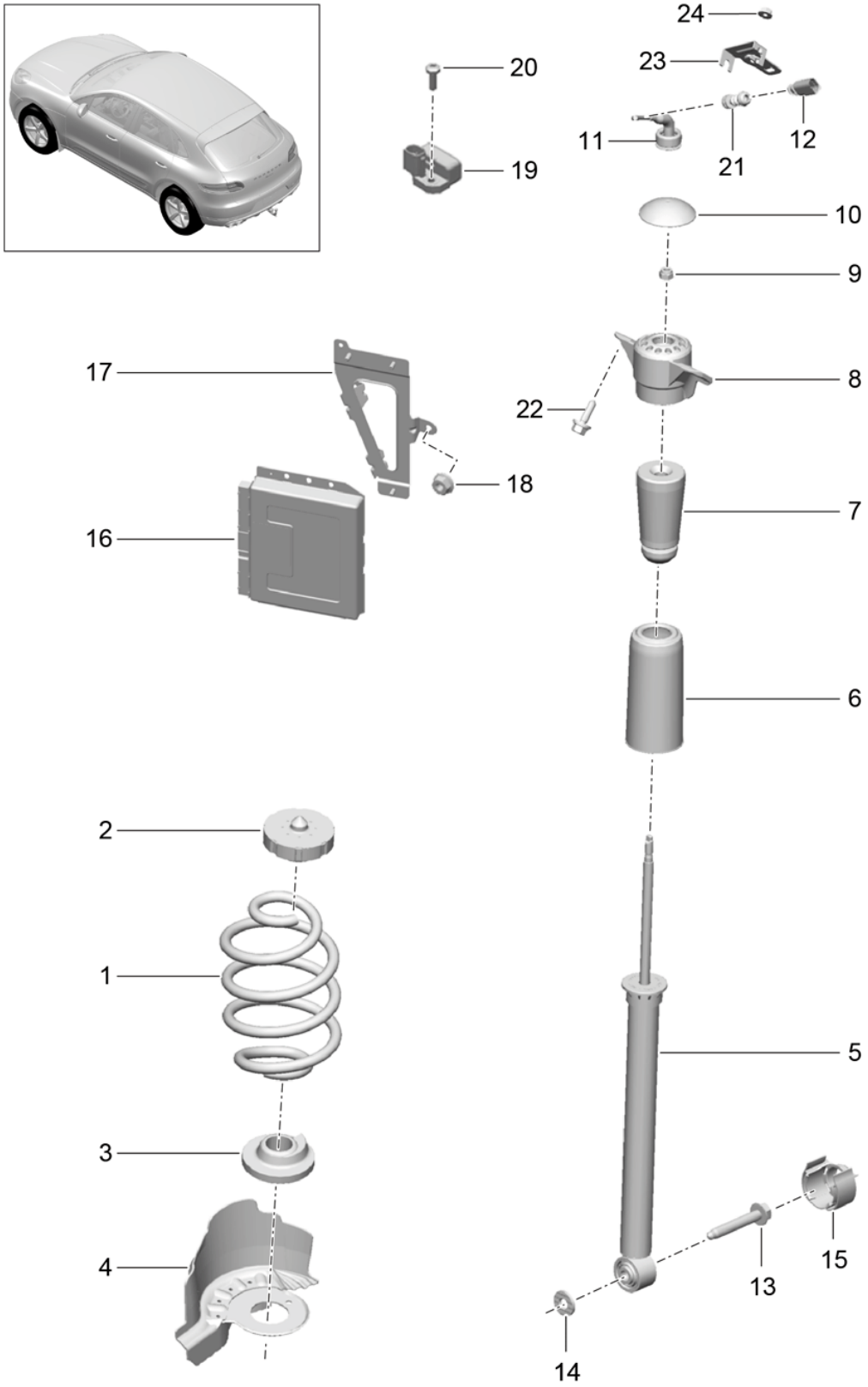

Model: 95B **Model life 2014>>**

Pos	Part Number	Description	Remark	Qty	Model
		suspension Steel Shock absorber strut			I1BA/1BH
1	95B 511 115 95B 511 115 504	Coil spring Set Identification Green Blue		1	I0YA/0YB/1BA
(1)	95B 511 115 A 95B 511 115 A 504	Coil spring Set Identification Green Orange		1	I0YC/0YD/1BA
(1)	95B 511 115 B 95B 511 115 B 504	Coil spring Set Identification Green Brown		1	I0YE/0YF/1BA
(1)	95B 511 115 C 95B 511 115 C 504	Coil spring Set Identification Green Red		1	I0YG/0YH/1BA
(1)	95B 511 115 E 95B 511 115 E 504	Coil spring Set Identification Blue Orange		1	-IE0W/I0YA I1BH
(1)	95B 511 115 F 95B 511 115 F 504	Coil spring Set Identification Blue Brown		1	-IE0W/I0YB I0YC/1BH
(1)	95B 511 115 G 95B 511 115 G 504	Coil spring Set Identification Blue Red		1	-IE0W/I0YD I0YE/1BH
(1)	95B 511 115 H 95B 511 115 H 504	Coil spring Set Identification Blue Dark red		1	-IE0W/I0YF I0YG/1BH
(1)	95B 511 115 J 95B 511 115 J 504	Coil spring Set Identification Blue Dark blue		1	-IE0W/I0YH I1BH
(1)	95B 511 115 AD 95B 511 115 AD 504	Coil spring Set Identification Silver White		1	IE0W/0YA/1BH
(1)	95B 511 115 AE 95B 511 115 AE 504	Coil spring Set Identification Silver		1	IE0W/0YB/0YC I1BH

Model: 95B **Model life 2014>>**

Pos	Part Number	Description	Remark	Qty	Model
		Yellow			
(1)	95B 511 115 AF	Coil spring		1	IE0W/0YD/0YE I1BH
	95B 511 115 AF 504	Set Identification Silver Orange			
(1)	95B 511 115 AG	Coil spring		1	IE0W/0YF/0YG I1BH
	95B 511 115 AG 504	Set Identification Silver Pink			
(1)	95B 511 115 AH	Coil spring		1	IE0W/0YH/1BH
	95B 511 115 AH 504	Set Identification Silver Violet			
(1)	95B 511 115 AJ	Coil spring		1	IE0W/0YJ/1BH
	95B 511 115 AJ 504	Set Identification Silver Blue			
2	95B 512 149 B	Concave washer Upper		2	
3	8K0 512 297 E	Concave washer Lower		2	
4	8R0 511 539 C	Stone guard	/L	1	
(4)	8R0 511 540 C	Stone guard	/R	1	
5	95B 513 035 D	Vibration damper		2	I1BA
(5)	95B 513 035 A	Vibration damper		2	I1BH
6	8K0 512 137 A	Boot		2	
7	95B 512 131 C	Rubber stop		2	I1BA
(7)	95B 512 131 D	Rubber stop		2	-IE0W/I1BH
(7)	95B 512 131 E	Rubber stop		2	IE0W/1BH
8	8K0 513 353 E	Mounting for absorber		2	I1BA
(8)	95B 513 353 A	Mounting for absorber		2	I1BH
9	N 102 951 01	Hexagon nut		2	I1BA
(9)	N 100 289 10	Hexagon nut		2	I1BH
10	8K0 512 135	Protection cap		2	I1BA
11	95B 971 873 A	Grommet		2	I1BH
12	1J0 973 802	Connector housing		2	I1BH
13	N 105 008 02	Hexagon-head bolt M14 X 1.5 X 90		2	
14	WHT 002 389	Washer		2	
15	8K0 511 533 A	Stone guard		2	
16	95B 907 557 C	Control unit		1	I1BH
17	95B 907 713	Support Control unit		1	
18	N 015 082 10	Hexagon nut M6		6	
19	95B 907 508	Acceleration sensor		1	I1BH
20	N 101 961 03	Oval-head screw M6X18		1	I1BH
21	95B 971 878	Protection cap		2	I1BH
22	N 910 661 01	Combination screw M10X35		4	I1BH
23	95B 971 005	Cable holder Left	/L	1	I1BH
(23)	95B 971 006	Cable holder Right F 95FLB 90001>>95FLB 90835	/R	1	I1BH

Model: 95B **Model life 2014>>**

Pos	Part Number	Description	Remark	Qty	Model
		F 95FLB 50001>>95FLB 51639 F 95FLB 70001>>95FLB 76019 F 95FLB 00001>>95FLB 00374			
(23)	95B 971 006 A	Cable holder Right F 95FLB 90836>> F 95FLB 51640>> F 95FLB 76020>> F 95FLB 00375>>	/R	1	I1BH
24	N 015 082 10	Hexagon nut M6		2	I1BH

Illustration: 502-05

PORSCHE

Model: 95B **Model life 2014>>**

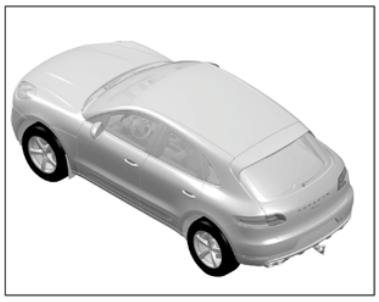

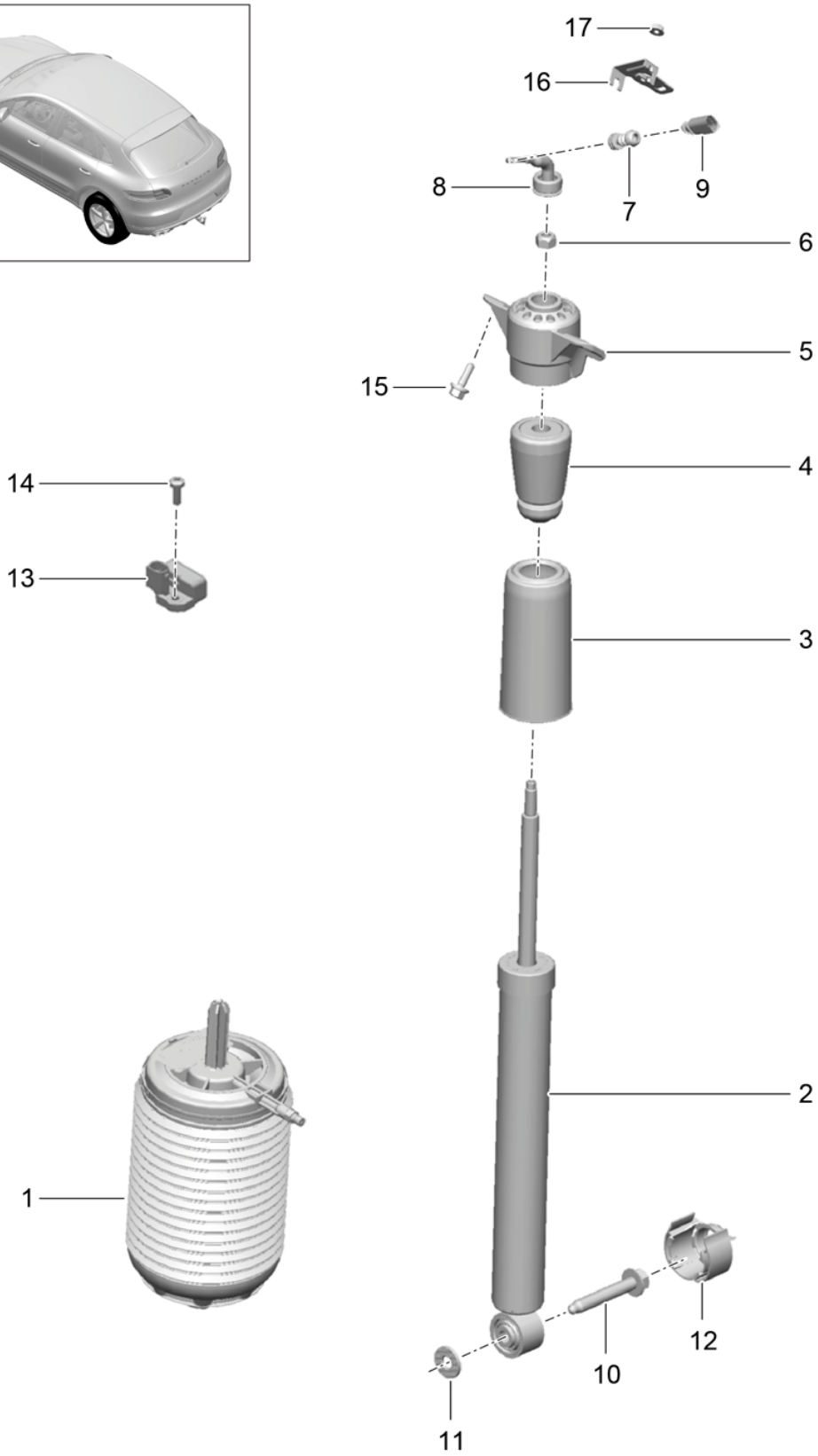

Model: 95B **Model life 2014>>**

Pos	Part Number	Description	Remark	Qty	Model
		Air spring Shock absorber strut			I1BK
1	95B 616 001 A	Air spring Module	/L	1	-IE0W
(1)	95B 616 001 C	Air spring Module	/L	1	IE0W
(1)	95B 616 002 A	Air spring Module	/R	1	-IE0W
(1)	95B 616 002 C	Air spring Module	/R	1	IE0W
2	95B 513 035 A	Vibration damper		2	
3	8K0 512 137 A	Boot		2	
4	95B 512 131 B	Rubber stop		2	-IE0W
(4)	95B 512 131 F	Rubber stop		2	IE0W
5	95B 513 353 A	Mounting for absorber		2	
6	N 100 289 10	Hexagon nut		2	
7	95B 971 878	Protection cap		2	
8	95B 971 873 A	Grommet		2	
9	1J0 973 802	Connector housing		2	
10	N 105 008 02	Hexagon-head bolt M14 X 1.5 X 90		2	
11	WHT 002 389	Washer		2	
12	8K0 511 533 A	Stone guard		2	
13	95B 907 508	Acceleration sensor		1	
14	N 101 961 03	Oval-head screw M6X18		1	
15	N 910 661 01	Combination screw M10X35		4	
16	95B 971 005	Cable holder Left	/L	1	
(16)	95B 971 006	Cable holder Right F 95FLB 90001>>95FLB 90835 F 95FLB 50001>>95FLB 51639 F 95FLB 70001>>95FLB 76019 F 95FLB 00001>>95FLB 00374	/R	1	
(16)	95B 971 006 A	Cable holder Right F 95FLB 90836>> F 95FLB 51640>> F 95FLB 76020>> F 95FLB 00375>>	/R	1	
17	N 015 082 10	Hexagon nut M6		2	
-		Control unit See illustrations 6/06/00		1	

Illustration: 601-00

PORSCHE

Model: 95B **Model life 2014>>**

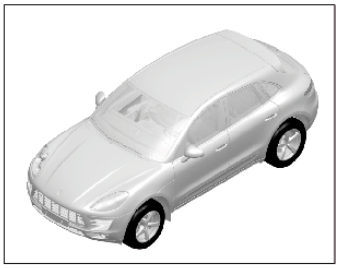

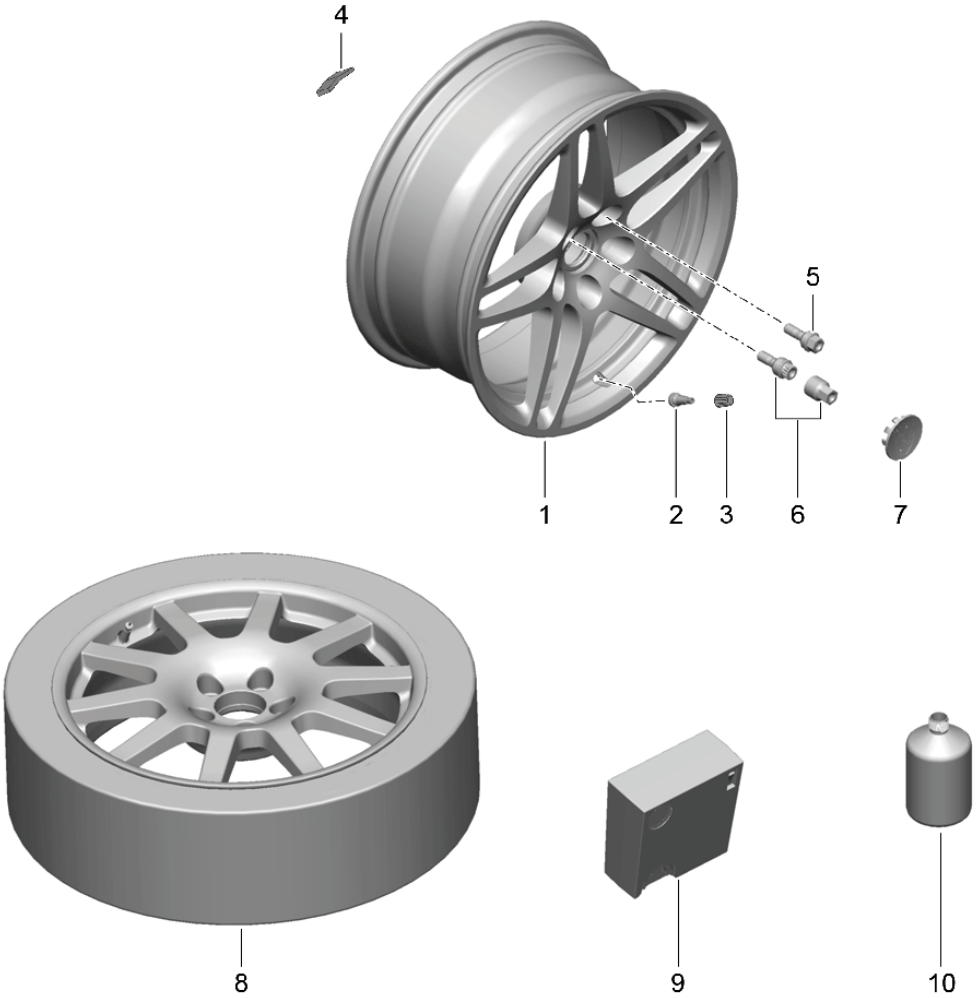

Model: 95B **Model life 2014>>**

Pos	Part Number	Description	Remark	Qty	Model
		Wheels see Manufacturer's certificate Group 4 Document 01/14			
1	95B 601 025 AH	Alloy wheel 8,0 J X 18 ET 21		2	IC5F
	95B 601 025 AH 8Z8	Silver			
(1)	95B 601 025 F	Alloy wheel 8,0 J X 19 H2 ET 21		2	IC6P
	95B 601 025 F 88Z	Silver			
(1)	95B 601 025 J	Alloy wheel 8,0 J X 19 H2 ET 21		2	IC6X
	95B 601 025 J 88Z	Brilliant chrome finish			
(1)	95B 601 025 M	Alloy wheel 9,0 J X 20 H2 ET 26		2	ICY3
	95B 601 025 M OC6	Titanium			
(1)	95B 601 025 BF	Alloy wheel 9,0 J X 20 H2 ET 26		2	I41L
	95B 601 025 BF JE1	Black mat			
(1)	95B 601 025 Q	Alloy wheel 9,0 J X 20 H2 ET 26		2	ICY4
	95B 601 025 Q 88Z	Brilliant chrome finish			
(1)	95B 601 025 T	Alloy wheel 9,0 J X 21 H2 ET 26		2	IC7T
	95B 601 025 T OC6	Titanium			
(1)	95B 601 025 AT	Alloy wheel 9,0 J X 21 H2 ET 26		2	IC7T
	95B 601 025 AT OC6	Titanium			
(1)	95B 601 025 AT	Alloy wheel 9,0 J X 21 H2 ET 26		2	I46X
	95B 601 025 AT 041	Black			
(1)	95B 601 025 AF	Alloy wheel 8,0 J X 18 H2 ET 21		2	IC7N
	95B 601 025 AF 8Z8	Silver			
(1)	95B 601 025 AC	Alloy wheel 9,0 J X 21 H2 ET 26		2	IC9K/V95/V96
	95B 601 025 AC M7Z	Silver metallic			IC9K
	95B 601 025 AC 041	Black			IV95
	95B 601 025 AC OB5	Platinum satin-matt			IV96
(1)	95B 601 025 AB	Alloy wheel 10,0 J X 21 H2 ET 19		2	IC7T
	95B 601 025 AB OC6	Titanium			
(1)	95B 601 025 BA	Alloy wheel 10,0 J X 21 H2 ET 19		2	IC7T
	95B 601 025 BA OC6	Titanium			
(1)	95B 601 025 BA	Alloy wheel 10,0 J X 21 H2 ET 19		2	I46X

Model: 95B **Model life 2014>>**

Pos	Part Number	Description	Remark	Qty	Model
	95B 601 025 BA 041	Black			
(1)	95B 601 025 AK	Alloy wheel 9,0 J X 18 H2 ET 21		2	IC7N
	95B 601 025 AK 8Z8	Silver			
(1)	95B 601 025 AL	Alloy wheel 9,0 J X 18 H2 ET 21		2	IC5F
	95B 601 025 AL 8Z8	Silver			
(1)	95B 601 025 AM	Alloy wheel 9,0 J X 19 H2 ET 21		2	IC6P
	95B 601 025 AM 88Z	Silver			
(1)	95B 601 025 AN	Alloy wheel 9,0 J X 19 H2 ET 21		2	IC6X
	95B 601 025 AN 88Z	Brilliant chrome finish			
(1)	95B 601 025 P	Alloy wheel 10,0 J X 20 H2 ET 19		2	ICY3
	95B 601 025 P OC6	Titanium			
(1)	95B 601 025 BG	Alloy wheel 10,0 J X 20 H2 ET 19		2	I41L
	95B 601 025 BG JE1	Black mat			
(1)	95B 601 025 S	Alloy wheel 10,0 J X 20 H2 ET 19		2	ICY4
	95B 601 025 S 88Z	Brilliant chrome finish			
(1)	95B 601 025 AE	Alloy wheel 10,0 J X 21 H2 ET 19		2	IC9K/V95/V96
	95B 601 025 AE M7Z	Silver metallic			IC9K
	95B 601 025 AE 041	Black			IV95
	95B 601 025 AE OB5	Platinum satin-matt			IV96
2	900 265 001 50	Rubber valve		4	-I7K3/-I7K4
(2)		Valve Tyre pressure monitoring See group 6/01/05		4	I7K3/7K4
3	955 361 163 00	Cap		4	
4	997 361 405 00	Balance stick-on weight 5 G.		X	
(4)	997 361 410 00	Balance stick-on weight 10 G.		X	
(4)	997 361 415 00	Balance stick-on weight 15 G.		X	
(4)	997 361 420 00	Balance stick-on weight 20 G.		X	
(4)	997 361 425 00	Balance stick-on weight 25 G.		X	
(4)	997 361 430 00	Balance stick-on weight 30 G.		X	
(4)	997 361 435 00	Balance stick-on weight 35 G.		X	
(4)	997 361 440 00	Balance stick-on weight 40 G.		X	
(4)	997 361 445 00	Balance stick-on weight 45 G.		X	
(4)	997 361 450 00	Balance stick-on weight 50 G.		X	
(4)	997 361 455 00	Balance stick-on weight 55 G.		X	

Model: 95B **Model life 2014>>**

Pos	Part Number	Description	Remark	Qty	Model
(4)	997 361 460 00	Balance stick-on weight 60 G.		X	
5	WHT 006 978	Wheel bolt		X	I1PC
6	WHT 006 979 A	Set Wheel bolts Anti-theft protection Comprising: Wheel bolt Adapter		1 4 1	-I444
(6)	WHT 006 980 A	Set Wheel bolts Anti-theft protection Comprising: Wheel bolt Adapter		1 4 1	IB0N/1PC
7	95B 601 150	Hub cap Concave		4	I1NE
	95B 601 150 8Z8	Brilliant Silver			IC5F/C7N
	95B 601 150 88Z	Brilliant chrome finish			IC6P/C6X
(7)	95B 601 150 A	Hub cap Coloured Concave		4	I1NP
	95B 601 150 A 8Z8	Brilliant Silver			IC5F/C7N
	95B 601 150 A 88Z	Brilliant chrome finish			IC6P/C6X
	95B 601 150 A M7Z	GT Silver Metallic			IC9K
(7)	95B 601 150 D	Hub cap Coloured Concave		4	I1NP
	95B 601 150 D 041	Black			IV95
	95B 601 150 D OB5	Platinum satin-matt			IV39/V96
(7)	95B 601 149	Hub cap Concave		4	IC7T/1NE/46X
(7)	95B 601 149 A	Hub cap Coloured Concave		4	IC7T/1NP/46X
(7)	95B 601 151	Hub cap Convex		4	I1NE
	95B 601 151 OC6	Titanium			ICY3
	95B 601 151 88Z	Brilliant chrome finish			ICY4
(7)	95B 601 151 A	Hub cap Coloured Concave		4	I1NP
	95B 601 151 A OC6	Titanium			ICY3
	95B 601 151 A 88Z	Brilliant chrome finish			ICY4
	95B 601 151 A JE1	Black mat			I41L
8	95B 601 011 J	Emergency wheel 18"		1	I1G1
(8)	95B 601 011 K	Emergency wheel 19"		1	I1G4
9	955 652 053 02	Compressor		1	
10	4L0 012 619 A	Compressed air bottle		1	I1G8

Illustration: 601-05

PORSCHE

Model: 95B **Model life 2014>>**

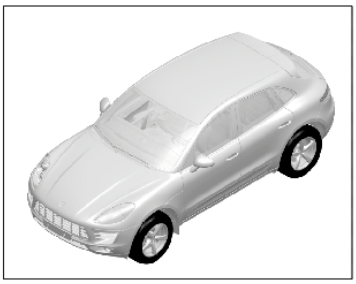

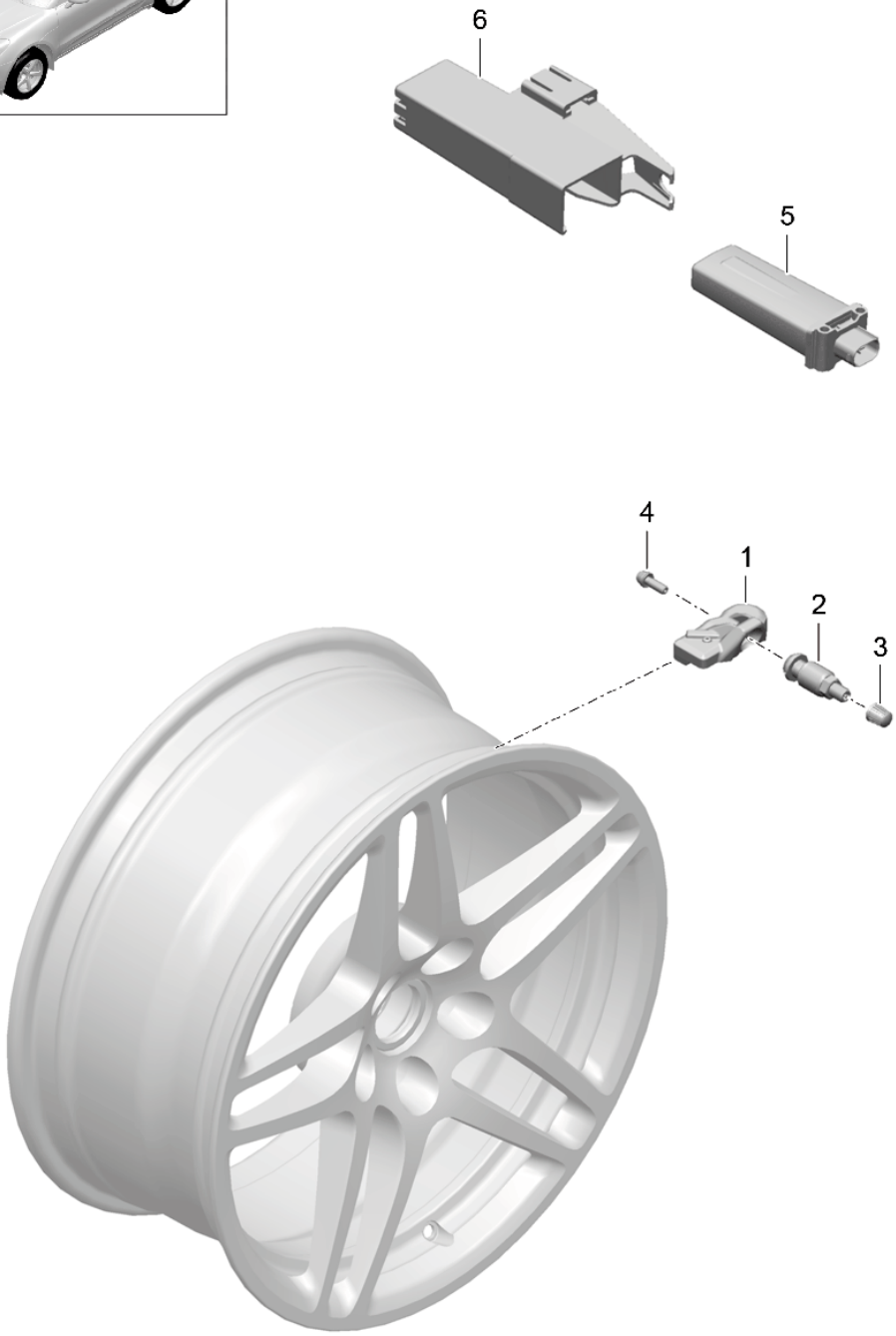

Model: 95B **Model life 2014>>**

Pos	Part Number	Description	Remark	Qty	Model
		Tyre pressure monitoring			I7K3/7K4
1	5Q0 907 275	Sensor		4	I7K3
		Tyre pressure monitoring			
		Use also:			
		955.361.053.00			
		Information available			
(1)	5Q0 907 275 A	Sensor		4	I7K4
		Tyre pressure monitoring			
		Use also:			
		955.361.053.00			
		Information available			
2	955 361 053 00	Valve		4	IUX6
		Tyre pressure monitoring			
		Silver			
(2)	9P1 601 361	Valve		4	IUX7
		Tyre pressure monitoring			
		Black			
3	N 908 729 01	Cap		4	IUX6
		Valve			
		Silver			
(3)	WHT 006 913	Cap		4	IUX7
		Valve			
		Black			
4	4D0 601 365	Fastening screw		4	
5	7PP 907 273 D	Control unit		1	I7K3
(5)	7PP 907 273 E	Control unit		1	I7K4
6	95B 907 324	Support		1	
		Control unit			

Illustration: 602-00

PORSCHE

Model: 95B **Model life 2014>>**

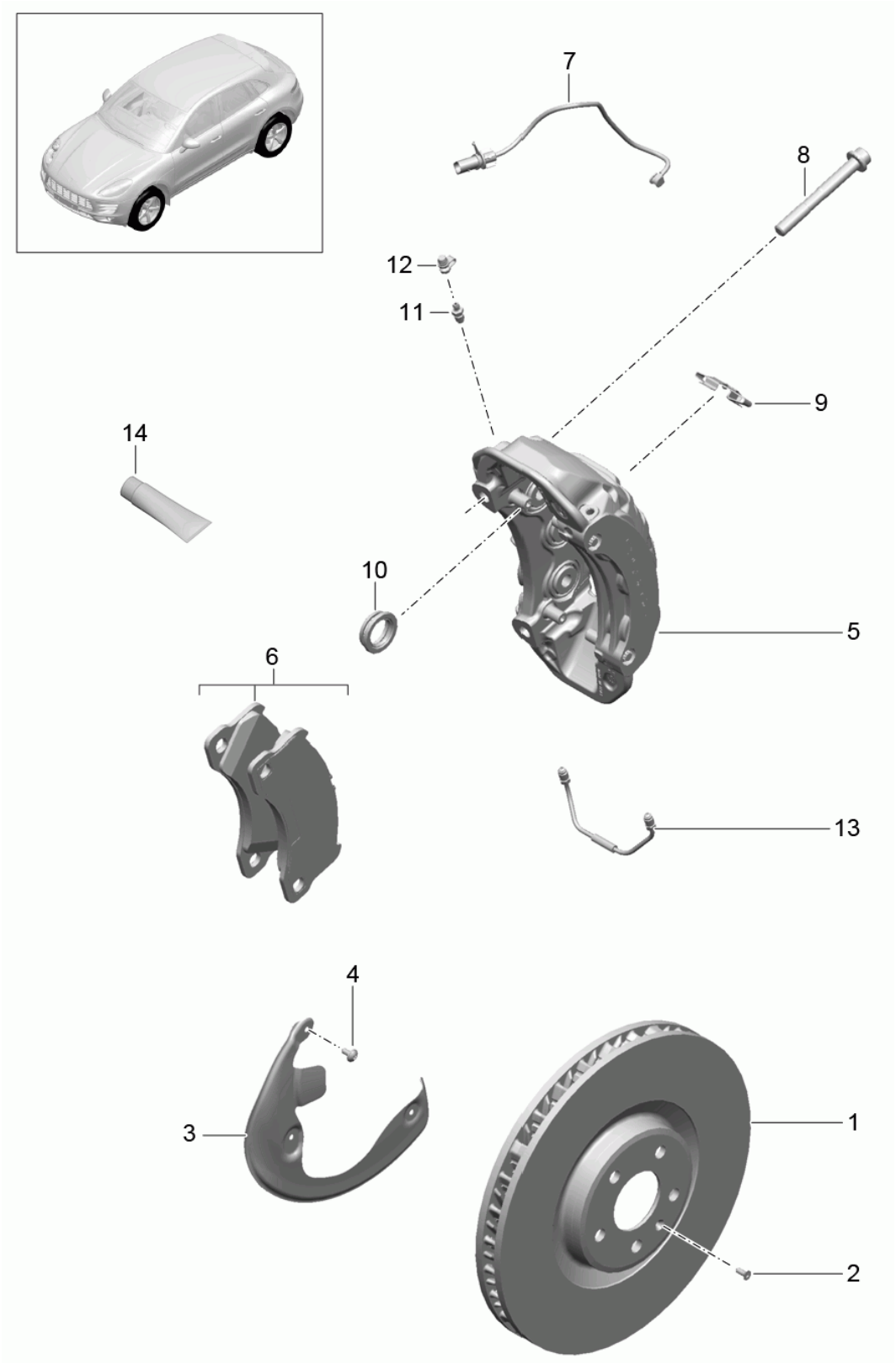

Model: 95B **Model life 2014>>**

Pos	Part Number	Description	Remark	Qty	Model
		Disc brake Front axle			
1	95B 615 301 B	Brake disc 17" 345X30	/L /R -16	2	I1LA
1	95B 615 301 M	Brake disc 17" 345X30	/L /R 16-	2	I1LA
(1)	95B 615 301	Brake disc 18" 350X34	/L	1	I1LB/1LF
(1)	95B 615 301 F	Brake disc 18" 350X34	/L	1	I1LB/1LF
(1)	95B 615 301 E	Brake disc 18" 360X36	/L	1	I1LG/1ZK
(1)	95B 615 301 G	Brake disc 18" 360X36	/L	1	I1LG/1ZK
(1)	95B 615 301 D	Brake disc 396X38	/L	1	I1LY
(1)	95B 615 302	Brake disc 18" 350X34	/R	1	I1LB/1LF
(1)	95B 615 302 F	Brake disc 18" 350X34	/R	1	I1LB/1LF
(1)	95B 615 302 E	Brake disc 18" 360X36	/R	1	I1LG/1ZK
(1)	95B 615 302 G	Brake disc 18" 360X36	/R	1	I1LG/1ZK
(1)	95B 615 302 D	Brake disc 396X38	/R	1	I1LY
2	N 106 483 01	Countersunk-head screw M6X16-TC		2	
3	95B 615 311 B	Cover plate	/L	1	I1LB/1LF/1LG I1ZK
(3)	95B 615 311 D	Cover plate	/L	1	I1LA
(3)	95B 615 311 C	Cover plate	/L	1	I1LY
(3)	95B 615 312 B	Cover plate	/R	1	I1LB/1LF/1LG I1ZK
(3)	95B 615 312 D	Cover plate	/R	1	I1LA
(3)	95B 615 312 C	Cover plate	/R	1	I1LY
4	N 107 414 02	Oval-head screw M 6 X 14-TC		6	I1LA/1LB/1LF I1LG/1ZK
(4)		Oval-head screw M 6 X 14-TC		8	I1LY
5	95B 615 123	Fixed calliper without pad Black Use also: Combination screw N .911.476.01 Delivered Connecting line	/L	1 2	I1LA
(5)	95B 615 123 A	Fixed calliper without pad Silver Use also: Pan-head screw WHT.004.571.	/L	1 2	I1LB/1LF
(5)	95B 615 123 B	Fixed calliper without pad Red Use also: Pan-head screw WHT.004.571.	/L	1 2	I1LG/1ZK
(5)	95B 615 123 C	Fixed calliper without pad	/L	1	I1LY

Model: 95B **Model life 2014>>**

Pos	Part Number	Description	Remark	Qty	Model
		Yellow			
		Use also:			
		Pan-head screw			
		WHT.004.571.		2	
(5)	95B 615 124	Fixed calliper	/R	1	I1LA
		without pad			
		Black			
		Use also:			
		Combination screw			
		N .911.476.01		2	
		Delivered			
		Connecting line			
(5)	95B 615 124 A	Fixed calliper	/R	1	I1LB/1LF
		without pad			
		Silver			
		Use also:			
		Combination screw			
		WHT.004.571.		2	
(5)	95B 615 124 B	Fixed calliper	/R	1	I1LG/1ZK
		without pad			
		Red			
		Use also:			
		Pan-head screw			
		WHT.004.571		2	
(5)	95B 615 124 C	Fixed calliper	/R	1	I1LY
		without pad			
		Yellow			
		Use also:			
		Pan-head screw			
		WHT.004.571.		2	
6	8R0 698 151 H	Brake pad repair set		1	I1LA
		Comprising:			
		Brake pad		2	
		Inner			
		Brake pad		2	
		Outer			
		Use also:			
		Mounting parts			
(6)	95B 698 151 E	Brake pad repair set		1	I1LB
		Comprising:			
		Brake pad		4	
		Use also:			
		Mounting parts			
(6)	95B 698 151 C	Brake pad repair set		1	I1ZK
		Comprising:			
		Brake pad		4	
		Use also:			
		Mounting parts			
(6)	7P5 698 151 D	Brake pad repair set		1	I1LY
		Comprising:			
		Brake pad		4	
		Use also:			
		Mounting parts			
7	95B 907 253	Brake pad wear indicator		2	I1LB/1LF/1LG
					I1ZK
(7)	95B 907 253 A	Brake pad wear indicator		2	I1LA
(7)	95B 907 253 C	Brake pad wear indicator		2	I1LY
8	N 911 476 01	Combination screw		4	I1LA
		M 14 X 1.5 X 48			
(8)	WHT 004 571	Pan-head screw		4	I1LB/1LF/1LG
					I1ZK
		M 14 X 1.5 X 115			
(8)	WHT 004 572	Pan-head screw		4	I1LY

Model: 95B **Model life 2014>>**

Pos	Part Number	Description	Remark	Qty	Model
		M 14 X 1.5 X 135			
9	8R0 698 269 A	Spring		2	I1LA
		Repair kit			
(9)	970 351 959 01	Spring		2	I1LB/1LF/1LG
					I1ZK
		Repair kit			
(9)	970 351 959 02	Spring		2	I1LB/1LF/1LG
					I1ZK
		Repair kit			
(9)		Spring		2	I1LY
		Repair kit			
10	8R0 698 471 A	Repair kit		2	I1LA
		Comprising:			
		Protection caps		4	
		for			
		Fixed calliper		1	
(10)	955 351 915 20	Repair kit		2	I1LB/1LF/1LG
					I1LY/1ZK
		Comprising:			
		Protection caps		6	
		for			
		Fixed calliper		1	
11	8A0 615 273	Ventilation valve		2	I1LA/1LB/1LF
					I1LG/1LY/1ZK
		with			
		Dust boot			
12	211 611 483	Dust boot		2	I1LA/1LB/1LF
					I1LG/1LY/1ZK
13	970 351 961 00	Connecting line	/L	1	I1LB/1LF/1LG
					I1ZK
(13)	7P5 615 701 A	Connecting line	/L	1	I1LY
(13)	970 351 962 00	Connecting line	/R	1	I1LB/1LF/1LG
					I1ZK
(13)	7P5 615 702 A	Connecting line	/R	1	I1LY
14	000 043 117 00	Brake cylinder paste		X	
		1 50-g tube			
(14)	000 043 020 00	Optimoly		X	
		1 100-gramme tube			

Illustration: 603-00

PORSCHE

Model: 95B **Model life 2014>>**

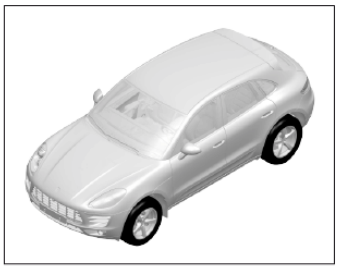

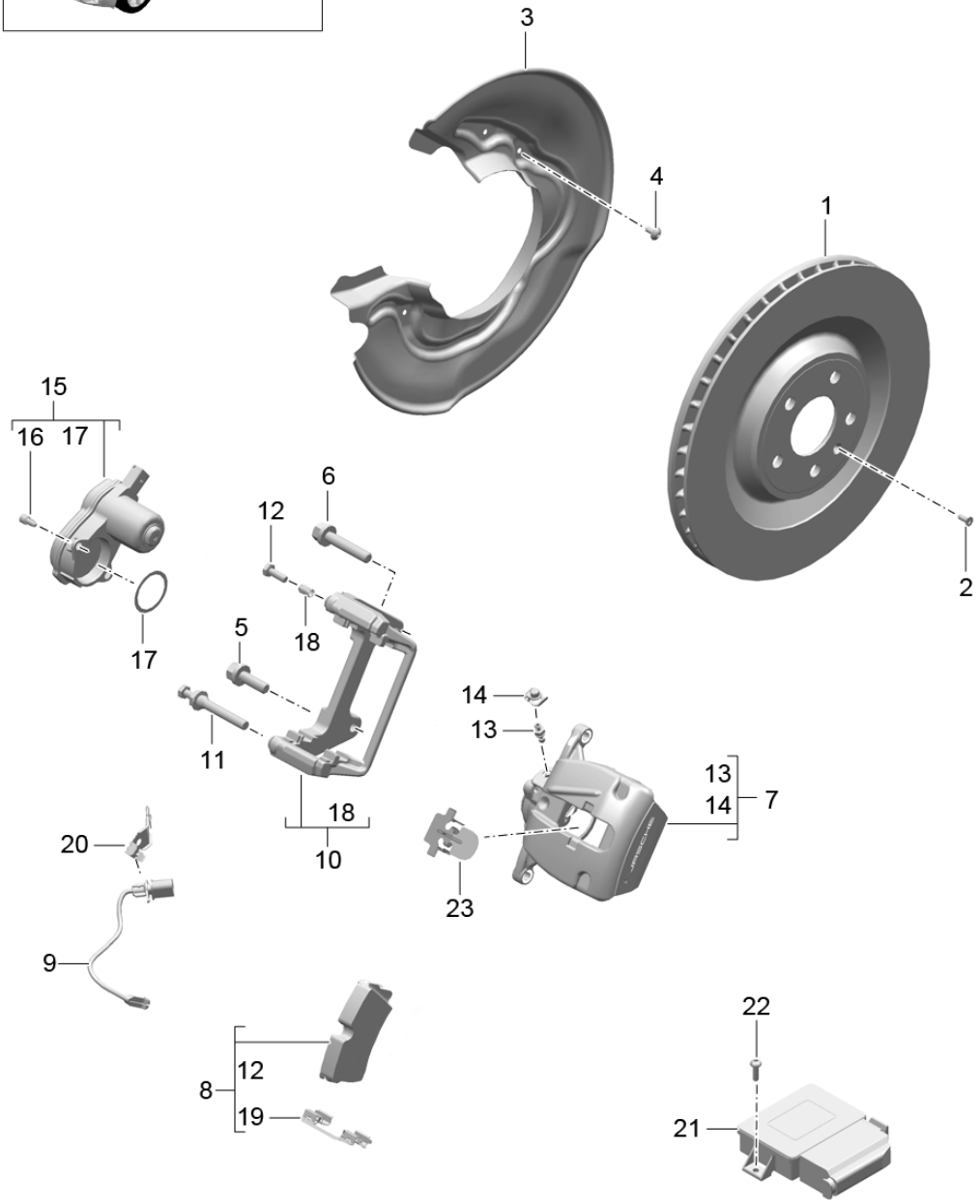

Model: 95B **Model life 2014>>**

Pos	Part Number	Description	Remark	Qty	Model
		Disc brake Rear axle			
1	95B 615 601 A	Brake disc 330X22	/L /R	2	I1KD/1KE/1KY
1	95B 615 601 F	Brake disc 330X22	/L /R -16	2	I1KD/1KE/1KY
1	95B 615 601 G	Brake disc 330X22	/L /R 16-	2	I1KD/1KE/1KY
(1)	95B 615 601	Brake disc 356X28	/L /R	2	I2EK
(1)	95B 615 601 D	Brake disc 356X28	/L /R	2	I2EK
(1)	95B 615 601 B	Brake disc 370X30	/L	1	I2EH
(1)	95B 615 602	Brake disc 370X30	/R	1	I2EH
2	N 106 483 01	Countersunk-head screw M 6 X 16		2	
3	95B 615 611	Cover plate	/L	1	I2EH/2EK
(3)	8K0 615 611 A	Cover plate	/L	1	I1KD/1KE/1KY
(3)	95B 615 612	Cover plate	/R	1	I2EH/2EK
(3)	8K0 615 612 A	Cover plate	/R	1	I1KD/1KE/1KY
4	N 107 414 02	Oval-head screw M6 X 14		8	
5	N 910 417 02	Combination screw M12 X 1,5 X 38		2	
6	N 911 268 01	Combination screw M12 X 1,5 X 62		2	
7	95B 615 423	Floating calliper Housing without pad Black Use also: Combination screw N .910.417.02 N .911.268.01	/L	1	I1KD
(7)	95B 615 423 D	Floating calliper Housing without pad Silver Use also: Combination screw N .910.417.02 N .911.268.01	/L	1	I1KE
(7)	95B 615 423 F	Floating calliper Housing without pad Silver Use also: Combination screw N .910.417.02 N .911.268.01	/L	1	I1KY
(7)	95B 615 423 E	Floating calliper Housing without pad Red Use also: Combination screw N .910.417.02 N .911.268.01	/L	1	I2EK
(7)	95B 615 423 C	Floating calliper Housing without pad	/L	1	I2EH

Model: 95B **Model life 2014>>**

Pos	Part Number	Description	Remark	Qty	Model
		Yellow Use also: Combination screw N .910.417.02 N .911.268.01			
(7)	95B 615 424	Floating calliper Housing without pad Black Use also: Combination screw N .910.417.02 N .911.268.01	/R	1	I1KD
(7)	95B 615 424 D	Floating calliper Housing without pad Silver Use also: Combination screw N .910.417.02 N .911.268.01	/R	1	I1KE
(7)	95B 615 424 F	Floating calliper Housing without pad Silver Use also: Combination screw N .910.417.02 N .911.268.01	/R	1	I1KY
(7)	95B 615 424 E	Floating calliper Housing without pad Red Use also: Combination screw N .910.417.02 N .911.268.01	/R	1	I2EK
(7)	95B 615 424 C	Floating calliper Housing without pad Yellow Use also: Combination screw N .910.417.02 N .911.268.01	/R	1	I2EH
8	4G0 698 451 A	Brake pad repair set Comprising: Brake pad Retainer spring Hexagon-head bolt Brake pad wear indicator		1 4 4 2 1	I1KD/1KE/1KY
(8)	95B 698 451	Brake pad repair set Comprising: Brake pad Retainer spring Hexagon-head bolt		1 4 4 4	I2EK
(8)	95B 698 451 B	Brake pad repair set Comprising: Brake pad Retainer spring Hexagon-head bolt		1 4 4 4	I2EH
9	4G0 615 121	Brake pad wear indicator Cable		2	-I2EH

Model: 95B **Model life 2014>>**

Pos	Part Number	Description	Remark	Qty	Model
(9)	4G0 615 121 A	Brake pad wear indicator Cable		2	I2EH
10	95B 615 425	Calliper carrier	/L	2	I1KD
(10)	95B 615 425 C	Calliper carrier	/L	2	I1KE
(10)	95B 615 425 E	Calliper carrier	/L	2	I1KY
(10)	95B 615 425 D	Calliper carrier	/L	2	I2EK
(10)	95B 615 425 B	Calliper carrier	/L	2	I2EH
(10)	95B 615 426	Calliper carrier	/R	2	I1KD
(10)	95B 615 426 C	Calliper carrier	/R	2	I1KE
(10)	95B 615 426 E	Calliper carrier	/R	2	I1KY
(10)	95B 615 426 D	Calliper carrier	/R	2	I2EK
(10)	95B 615 426 B	Calliper carrier	/R	2	I2EH
11	WHT 001 921	Hexagon-head bolt M8 X 22,15		2	I1KD/1KE/1KY
12	N 010 241 24	Hexagon-head bolt M8 X 22-K		2	I1KD/1KE/1KY
(12)		Hexagon-head bolt M8 X 22-K		4	I2EK
13	1K0 615 273 C	Ventilation valve		2	
14	4H0 611 483	Dust boot		2	
15	8K0 998 281 A	Electric motor Parking brake with Mounting parts		2	
16	N 102 855 06	Pan-head screw M6 X 12		2	
17	4E0 615 137	O-ring		2	
18	8K0 698 470 A	Boot for Guide pin Set Comprising:		2	
		Bellows		2	
		Hexagon-head bolt		2	
		Grease		1	
19	3D0 615 231	Retainer spring Intermediate layer		2	I1KD/1KE/1KY
(19)	4H6 615 231 A	Retainer spring Intermediate layer		2	I2EH/2EK
20	4G0 615 133	Cable holder Brake pad wear indicator	/L	2	
(20)	4G0 615 134	Cable holder Brake pad wear indicator	/R	2	
21	95B 907 801 B	Control unit Parking brake		1	
22	N 101 243 09	Oval-head screw M6 X 20		2	
23	4G0 615 191	Heat protection Brake pad wear indicator		2	I2EH

Illustration: 604-00

PORSCHE

Model: 95B **Model life 2014>>**

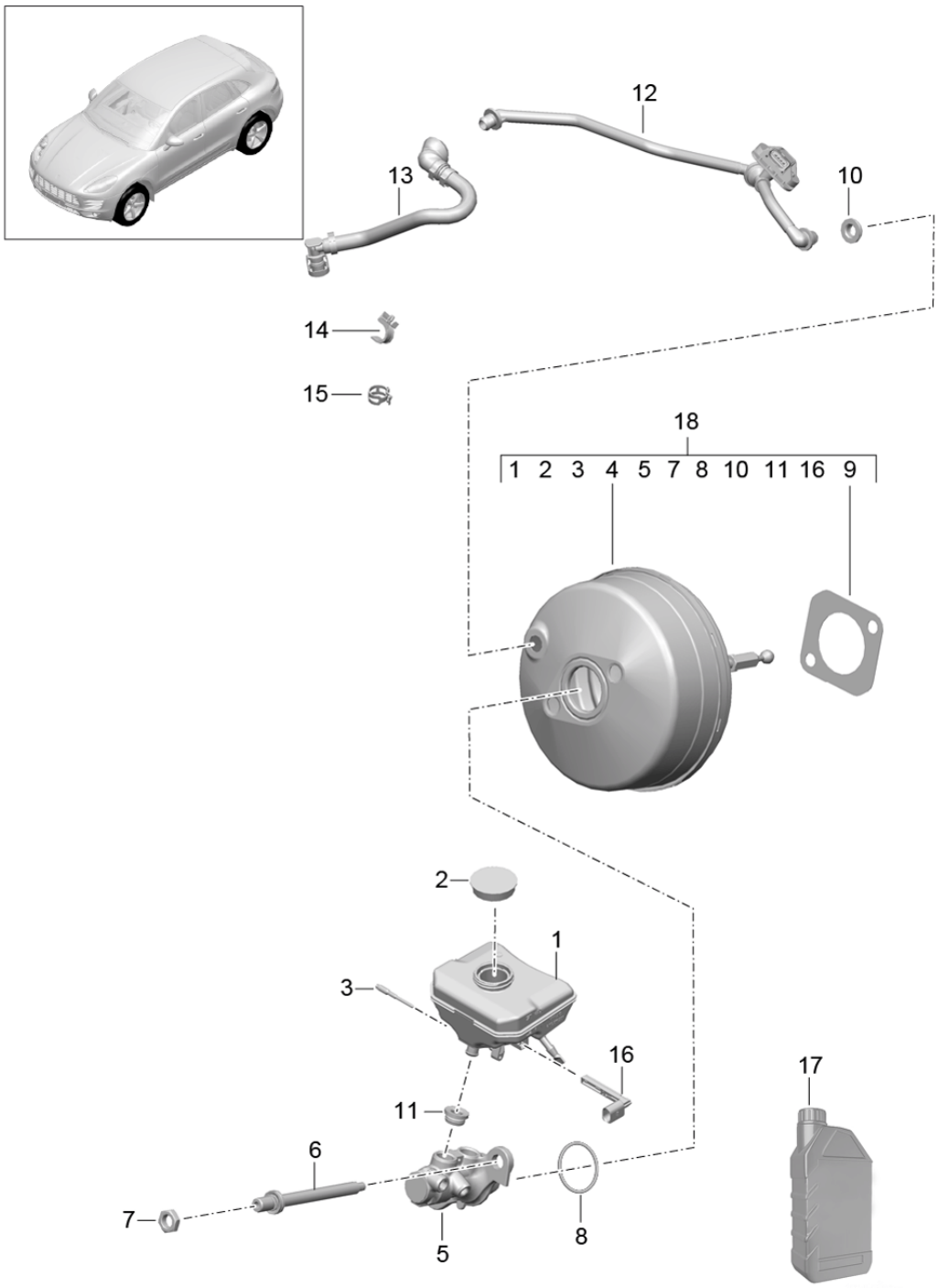

Model: 95B **Model life 2014>>**

Pos	Part Number	Description	Remark	Qty	Model
		Brake master cylinder			
		Brake booster			
		Vacuum line			
1	8W0 611 301	Brake fluid reservoir		1	
(2)	5Q0 611 349 B	Lid		1	
3	WHT 005 308	Outer hexagon round screw		1	
		M 5 X 51			
4	4M0 612 107	Brake booster		1	I1KD/1LA
(4)	4M0 612 107 B	Brake booster		1	I1KE/1LB/1LF
					I1LG/1ZK/2EK
(4)	4M0 612 107 C	Brake booster		1	I1LY/2EH
5	4M0 611 021 C	Brake master cylinder		1	I1KD/1LA
		Use also:			
		Nut		2	
		M8			
(5)	4M0 611 021 D	Brake master cylinder		1	I1KE/1LB/1LF
					I1LG/1ZK/2EK
		Use also:			
		Nut		2	
		M8			
(5)		Brake master cylinder		1	I1LY/2EH
6	WHT 003 382 A	12 point socket		2	
		BM8 X 205 X 125			
7	8K0 698 135	Nut		2	
		M16X8			
8	4G0 611 243	Sealing ring		1	
9	4G0 612 161	Gasket		1	
10	958 355 175 00	Gasket		1	
11	958 355 922 00	Rubber seal		2	
12	95B 611 931 H	Vacuum line		1	IL0L
(12)	95B 611 931 J	Vacuum line		1	IL0R
13	95B 611 931 E	Vacuum line		1	IDM0
(13)	95B 611 931 L	Vacuum line		1	IDD7/D1V/D43
					ID51
(13)	95B 611 931 K	Vacuum line		1	IDU0/DU1
14	8K0 612 797 E	Fixing clip		1	IDM0
15	955 347 569 00	Hose clamp		1	IDD7/D1V/D43
					ID51
16	1S0 611 377	Insert		1	
17	000 043 203 66	Brake fluid		X	
		DOT 4			
		1 LTR.			
18	4M0 612 103	Brake booster		1	I1KD/1LA
		Complete			
(18)	4M0 612 103 E	Brake booster		1	I1KE/1LB/1LF
					I1LG/1ZK/2EK
		Complete			

Illustration: 604-05

PORSCHE

Model: 95B **Model life 2014>>**

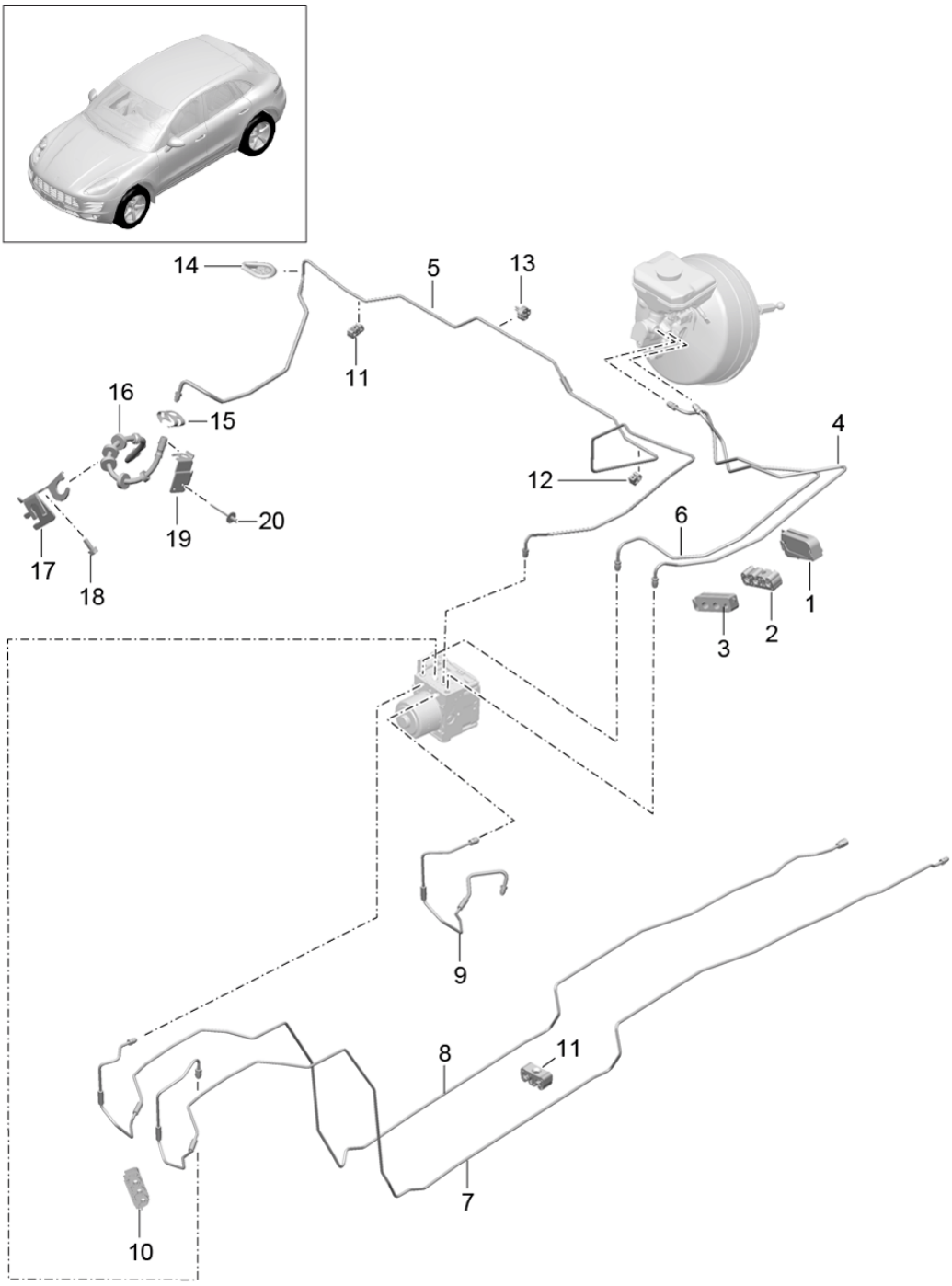

Model: 95B **Model life 2014>>**

Pos	Part Number	Description	Remark	Qty	Model
		Brake lines Body front section Front			
1	8R0 614 769 B	Grommet		1	
2	8K0 611 797 E	Line bracket Information available		2	IL0L IL0L
(2)	4E0 611 797	Line bracket		1	IL0R
3	958 355 797 05	Support Triple		3	IL0R
4	95B 614 162	Brake line		1	IL0L
(4)	95B 614 684 A	Brake line		1	IL0R
5	95B 614 724 B	Brake line		1	
6	95B 614 161	Brake line		1	IL0L
(6)	95B 614 683	Brake line		1	IL0R
7	95B 614 725 A	Brake line		1	
8	95B 614 726 A	Brake line		1	
9	95B 614 723 A	Brake line		1	
10	6N0 611 797 D	Support		1	
11	8K0 611 797 D	Line bracket		10	I1BA/1BH
(11)		Line bracket		8	I1BK
12	95B 611 797	Support		1	
13	955 355 550 00	Connection piece		2	
14	8K0 614 769 B	Grommet		1	
15	8K0 611 715	Retainer spring		2	
16	95B 611 701 A	Brake hose		2	I1LA
(16)	95B 611 701 B	Brake hose		2	I1LB/1LF/1LG I1ZK
(16)	95B 611 701 F	Brake hose	/L	1	I1LY
(16)	95B 611 701 G	Brake hose	/L	1	I1LY
(16)	95B 611 702 A	Brake hose	/R	1	I1LY
(16)	95B 611 702 B	Brake hose	/R	1	I1LY
17	95B 971 501	Support Brake hose Wheel carrier Left	/L	1	I1LA/1LB/1LE I1LF/1LG/1ZK
(17)	95B 971 501 A	Support Brake hose Wheel carrier Left	/L	1	I1LY
(17)	95B 971 502	Support Brake hose Wheel carrier Right	/R	1	I1LA/1LB/1LE I1LF/1LG/1ZK
(17)	95B 971 502 A	Support Brake hose Wheel carrier Right	/R	1	I1LY
18	N 100 829 13	Hexagon-head bolt M6X16		2	
19	8R0 611 845 A	Support Brake hose Body Left	/L	1	
(19)	8R0 611 846 A	Support Brake hose Body Right	/R	1	
20	N 902 866 04	Blind rivet		4	

Illustration: 604-10

PORSCHE

Model: 95B **Model life 2014>>**

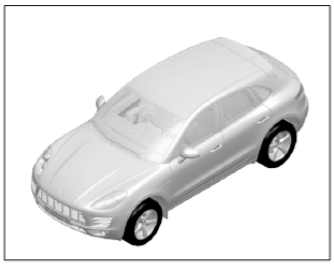

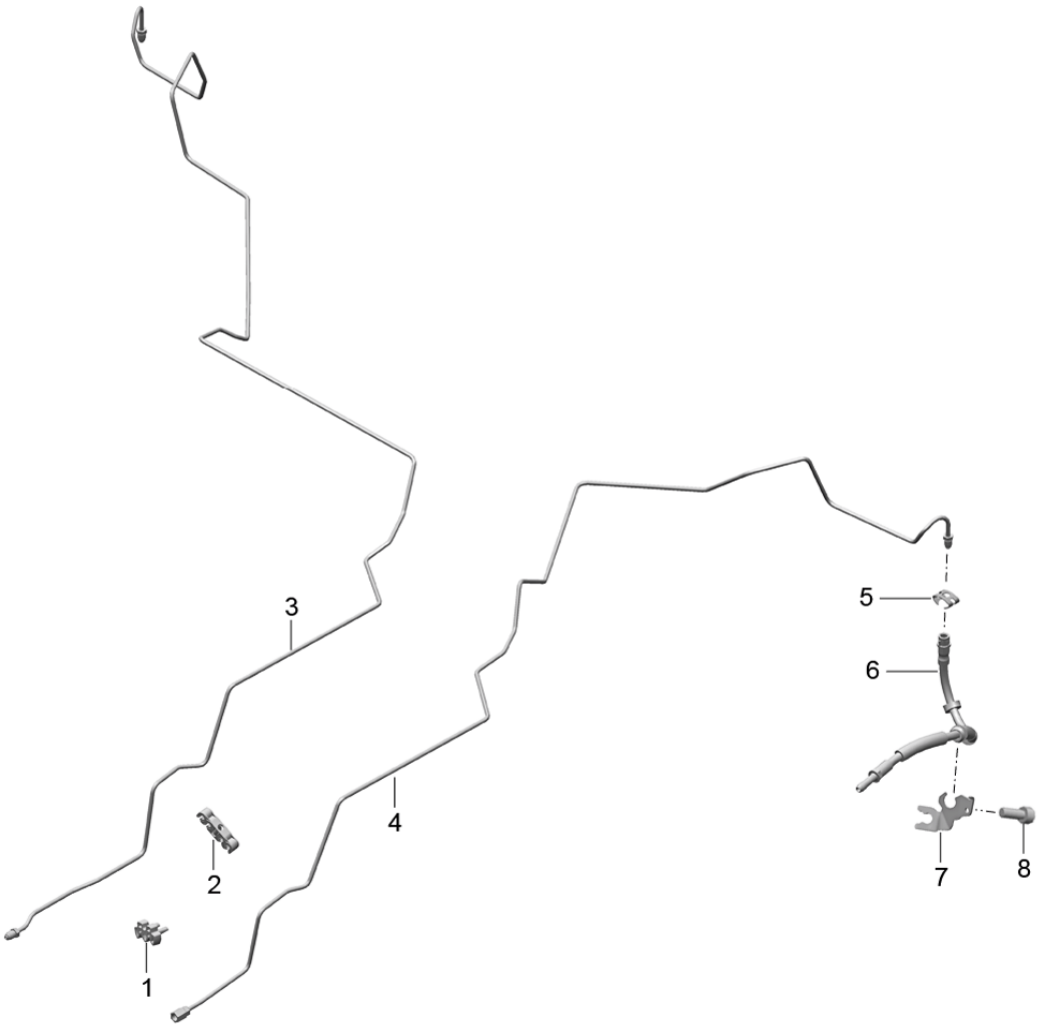

Model: 95B **Model life 2014>>**

Pos	Part Number	Description	Remark	Qty	Model
		Brake lines Underbody Centre Rear			
1	1K0 611 853	Support		2	I1BA/1BH
(1)		Support		1	I1BK
2	955 355 543 20	Support		2	
3	95B 614 742 A	Brake line		1	
4	95B 614 741	Brake line		1	
5	8K0 611 715	Retainer spring		2	
6	8K0 611 775 J	Brake hose		2	I1KD/1KE
(6)	95B 611 776	Brake hose		2	I2EK
(6)	95B 611 776 A	Brake hose		2	I2EH
7	8K0 611 845 G	Support Brake hose Left	/L	1	
(7)	8K0 611 846 G	Support Brake hose Right	/R	1	
8	N 014 740 11	Pan-head screw M 6 X 16		2	

Illustration: 605-00

PORSCHE

Model: 95B **Model life 2014>>**

Model: 95B **Model life 2014>>**

Pos	Part Number	Description	Remark	Qty	Model
		Hydraulic unit			
		Anti-lock brake system			
1	95B 614 511 D	Hydraulic unit	-15	1	-I8T3
1		Hydraulic unit	16	1	-IIY2/-I8T3
(1)	95B 614 512 D	Hydraulic unit	-15	1	I8T3
(1)		Hydraulic unit	16	1	-IIY2/I8T3
(1)	95B 614 511 K	Hydraulic unit	17-	1	-I8T3
(1)	95B 614 512 K	Hydraulic unit	17-	1	I8T3
2	95B 614 235	Support		1	
3	N 107 862 01	Oval-head screw		3	
4	958 355 177 10	Buffer		3	
5	95B 907 637 A	Sensor	-16	1	
		Position			
		Floorpan			
(5)	95B 907 637 E	Sensor	17-	1	
		Position			
		Centre console			

Illustration: 606-00

PORSCHE

Model: 95B **Model life 2014>>**

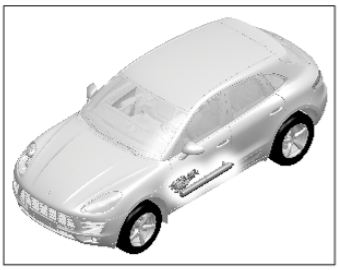

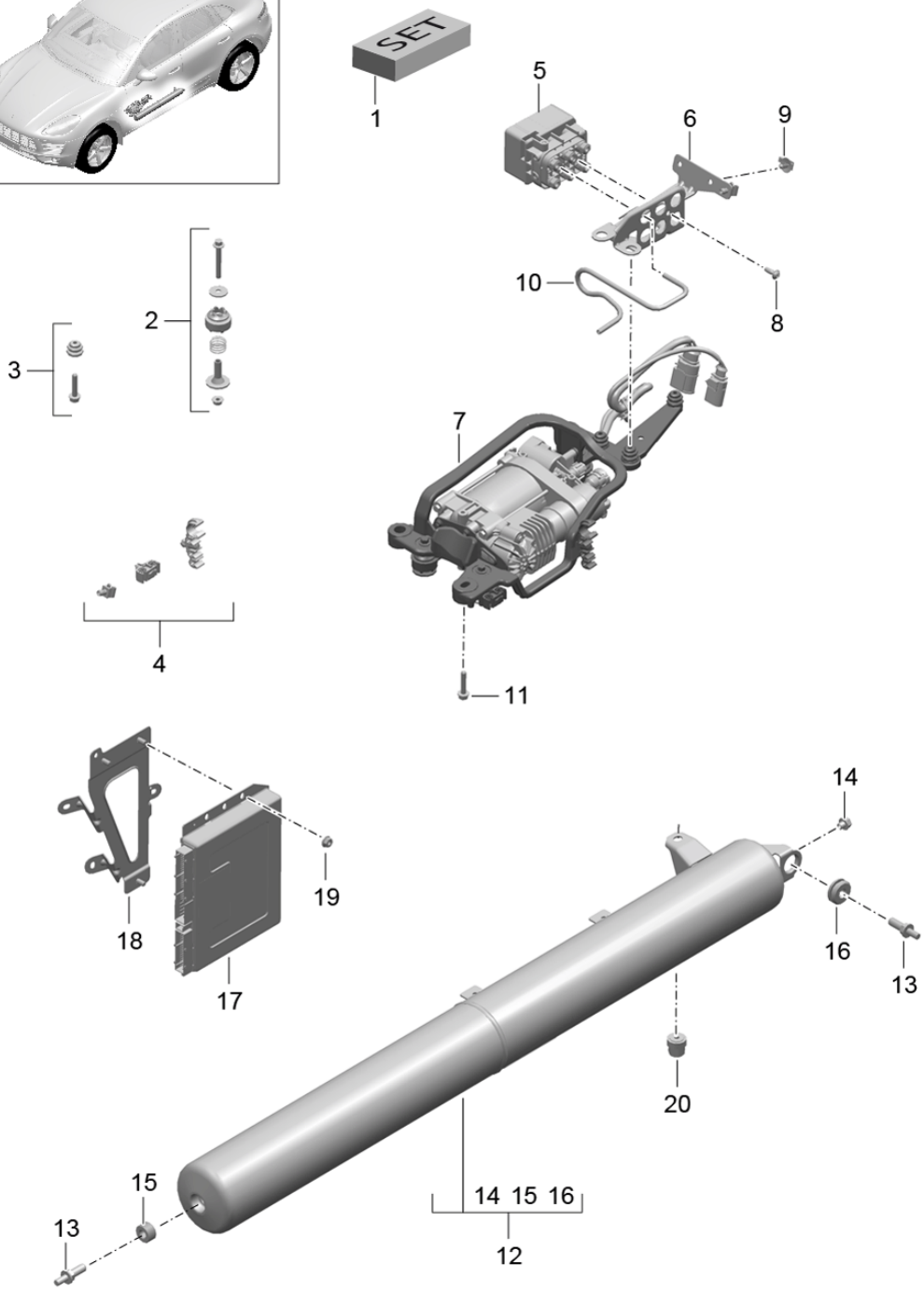

Model: 95B **Model life 2014>>**

Pos	Part Number	Description	Remark	Qty	Model
		Level adjustment			I1BK
		Compressor			
		Pressure accumulator			
		Control unit			
1	95B 698 010	Repair kit		1	
		Compressor			
		Comprising:			
		Compressor		1	
		Support		1	
		Switch			
		Support		1	
		Crankcase			
		Screw		5	
		Hexagon nut		3	
		Tie-wrap		1	
		Cable strap		1	
2	95B 698 137	Repair kit		1	
		Bearing			
		Comprising:			
		Hexagon nut		3	
		Hexagon-head bolt		3	
		Washer		3	
		Spring		1	
		Spring		2	
		Support		3	
		Rubber mounting		3	
3	95B 698 030	Repair kit		1	
		Insulation			
		Comprising:			
		Hexagon-head bolt		3	
		Damping piece		3	
4	95B 698 139	Repair kit		1	
		Support			
		Comprising:			
		Line bracket		1	
		Line bracket		1	
		Line bracket		1	
5	7P0 616 014	Valve block		1	
6	95B 616 251	Support		1	
		Valve block			
7	95B 616 879 A	Bracket		1	
		for			
		Compressor			
8	N 107 214 01	Oval-head screw		2	
		M6 X 16			
9	N 906 851 01	Support		4	
		Connector			
10	95B 616 703 A	Pressure line		1	
11	N 910 678 01	Hexagon-head bolt		3	
		M 8 X 45			
12	95B 616 201 A	Pressure accumulator		1	
13	WHT 001 832	Screw		2	
		M8 X 16			
14	955 358 540 00	Push-on connector		1	
		Pressure accumulator			
		Line			
15	958 358 320 00	Rubber mounting		1	
16	964 356 635 00	Rubber mounting		1	
17	95B 907 553 C	Control unit		1	
		Level adjustment			
18	95B 907 713	Support		1	
		Control unit			
19	N 015 082 10	Hexagon nut		6	

Model: 95B **Model life 2014>>**

Pos	Part Number	Description	Remark	Qty	Model
20	958 611 182 00	M6 Cap nut M8		1	

Illustration: 606-10

PORSCHE

Model: 95B **Model life 2014>>**

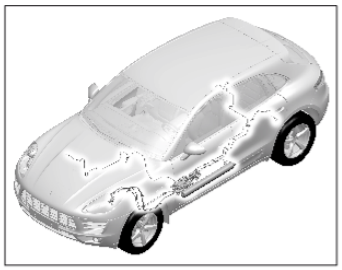

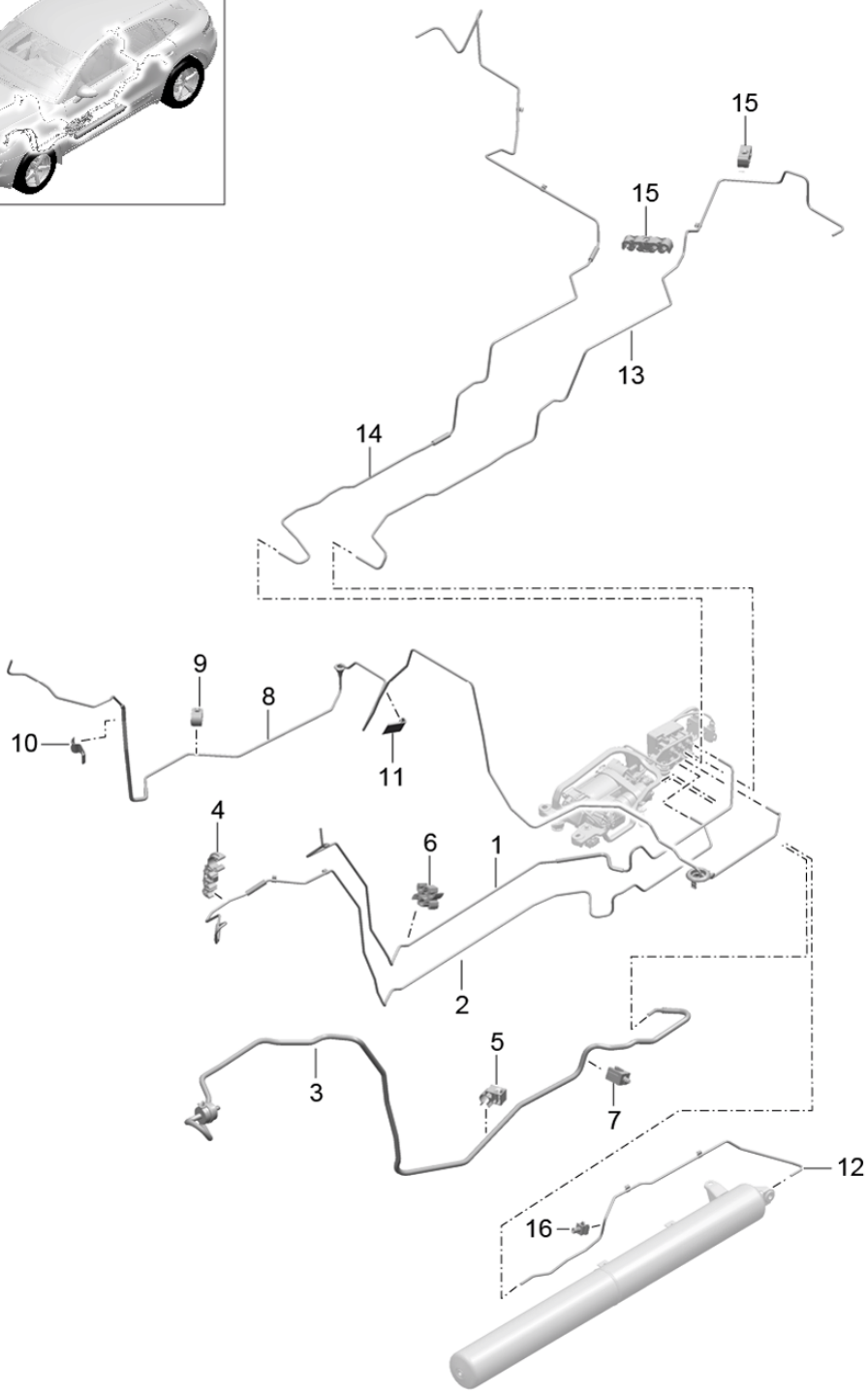

Model: 95B **Model life 2014>>**

Pos	Part Number	Description	Remark	Qty	Model
		Level adjustment			I1BK
		Lines			
1	95B 616 719	Pressure line		1	
		Front			
		Left			
		Violet			
2	95B 616 657	Pressure line		1	
		Black			
3	95B 616 785 A	Intake pipe		1	
		Black			
4	95B 616 143	Support		2	
		Fourfold			
5	95B 616 197	Support		4	
		Simple			
6	95B 616 198	Support		3	
		Fourfold			
7	N 909 435 01	Hose holder		1	
8	95B 616 762	Pressure line		1	
		Front			
		Right			
		Green			
9	95B 611 797	Support		4	
10	95B 616 259	Support		1	
11	7L5 827 925	Velcro strip		1	
12	95B 616 706	Pressure line		1	
		Pressure accumulator			
		Black			
13	95B 616 763	Pressure line		1	
		Rear			
		Left			
		Red			
14	95B 616 764 A	Pressure line		1	
		Rear			
		Right			
		Yellow			
15		Line bracket		8	
		See illustrations			
		6/04/05			
16	955 511 645 00	Clip		1	
		4.80-6.00X6.50			

Illustration: 701-00

PORSCHE

Model: 95B **Model life 2014>>**

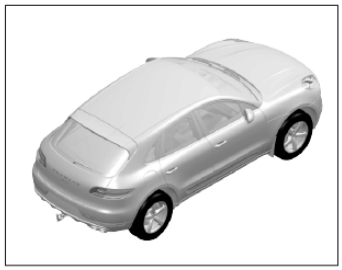

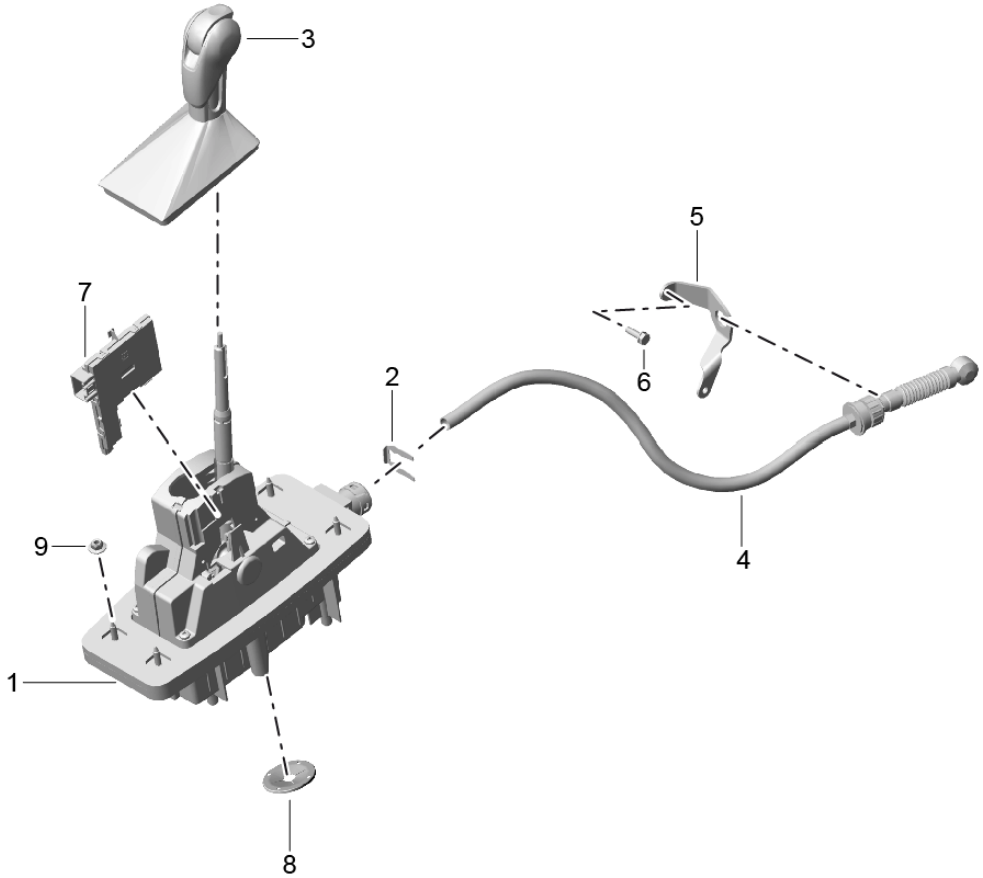

Model: 95B **Model life 2014>>**

Pos	Part Number	Description	Remark	Qty	Model
		Selector lever PDK			
1	95B 713 059	Support		1	
2	955 426 335 01	Securing clip		1	
3	95B 713 139 B	Selector lever		1	I6Q2
	95B 713 139 B 8YR	Black			+VC,+VJ,+VF, +VI,+VU,+VK +VO,+VX,+VZ
	95B 713 139 B PL1	Agate Grey			+VD,+VG,+VL +VQ
	95B 713 139 B 9H6	Luxor Beige			+VE,+VH,+VM
	95B 713 139 B 8C0	Espresso			+VR
	95B 713 139 B OK6	Saddle Tan			+VN,+VP
(3)	95B 713 139 C	Selector lever		1	I7F4
	95B 713 139 C 8YR	Black			+VC,+VJ,+VF, +VI,+VU,+VK +VO,+VX,+VZ
	95B 713 139 C PL1	Agate Grey			+VD,+VG,+VL +VQ
	95B 713 139 C 9H6	Luxor Beige			+VE,+VH,+VM
	95B 713 139 C 8C0	Espresso			+VR
	95B 713 139 C OK6	Saddle Tan			+VN,+VP
(3)	95B 713 139 D	Selector lever Alcantara		1	I6Q5
	95B 713 139 D 2W0	Black			
4	8R0 713 265 K	Cable		1	
5	8K0 713 281 F	Support		1	
6	N 090 261 9	Combination screw M6 X 20		2	
7	95B 713 132	Control mechanism		1	
8	N 902 204 02	Clamping washer B-10X40		4	IDU0/DU1
9	N 908 877 03	Hexagon nut M6		4	

Illustration: 702-00

PORSCHE

Model: 95B **Model life 2014>>**

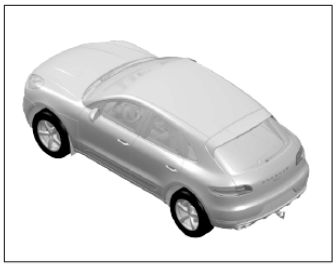

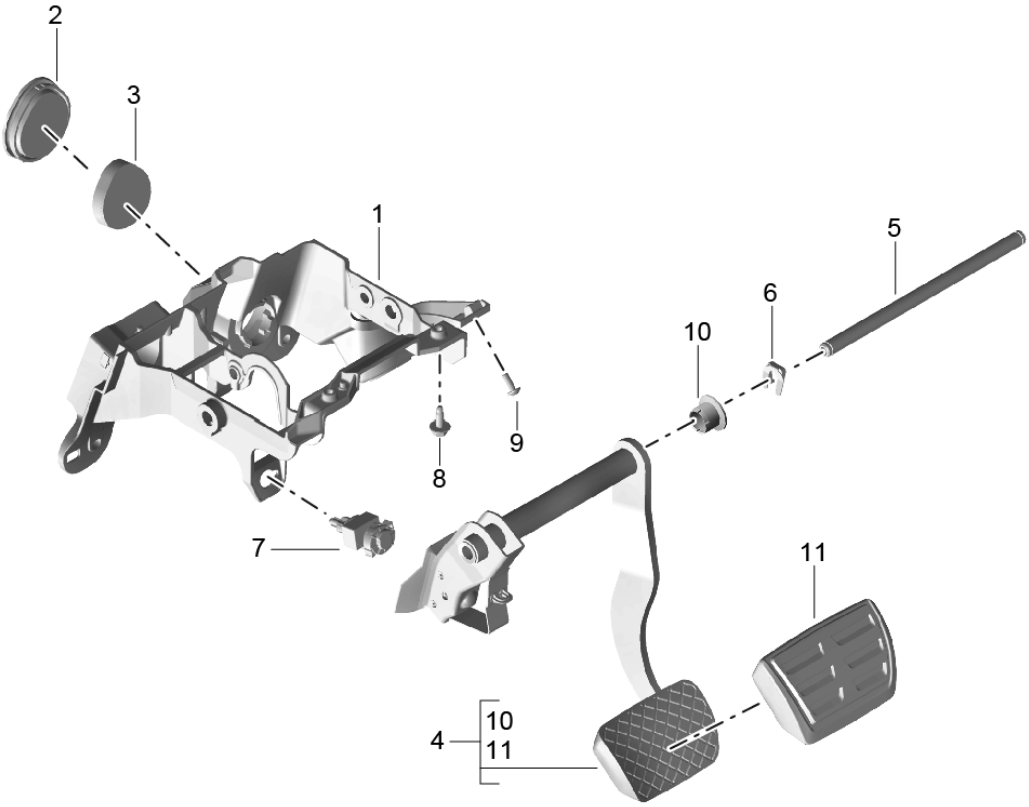

Illustration: 702-00

PORSCHE

Model: 95B **Model life 2014>>**

Pos	Part Number	Description	Remark	Qty	Model
		Pedals			
1	95B 723 117 B	Bearing bracket		1	IL0L
(1)	8K2 721 117	Bearing bracket		1	IL0R
2	8K0 721 495	Grommet		1	
3	8K0 723 495	Stopper		1	
4	4H1 723 140 A	Brake pedal		1	IL0L
(4)	8K2 723 140 A	Brake pedal		1	IL0R
5	95B 723 311 A	Bearing pin Brake pedal		1	IL0L
(5)	8K2 721 329	Bearing pin Brake pedal		1	IL0R
6	N 012 329 4	Lock washer		2	IL0L
(6)	N 911 484 01	Lock washer		2	IL0R
7	4F0 945 459 B	Sensor Brake light		1	
8	WHT 003 698	Hexagon-head bolt M8X22		1	IL0L
(8)		Hexagon-head bolt M8X22		2	IL0R
9	N 107 148 01	Outer hexagon round screw M6X18		1	
10	95B 723 820	Bearing sleeve		1	IL0L
(10)	95B 723 820 A	Bearing sleeve		1	IL0R
11	4H1 723 173	Pedal cap		1	IL0L
(11)	8K2 723 173	Pedal cap		1	IL0R

Illustration: 702-10

PORSCHE

Model: 95B **Model life 2014>>**

Illustration: 702-10

PORSCHE

Model: 95B **Model life 2014>>**

Pos	Part Number	Description	Remark	Qty	Model
		Pedals			
		Accelerator control			
1	8K1 723 523 A	Accelerator control		1	
2	958 423 199 00	Mount	/LL	1	IL0L
		Accelerator control			
(2)	N 107 148 01	Outer hexagon round screw	/RL	1	IL0R

Illustration: 801-00

PORSCHE

Model: 95B **Model life 2014>>**

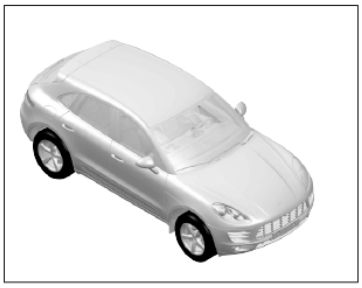

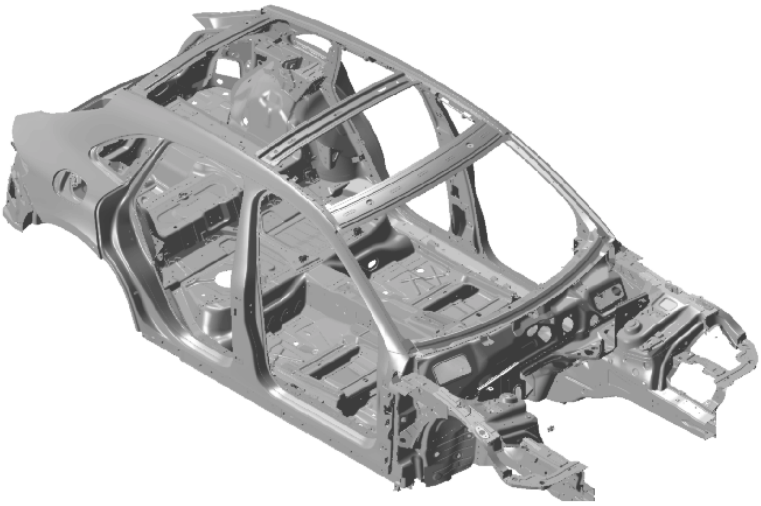

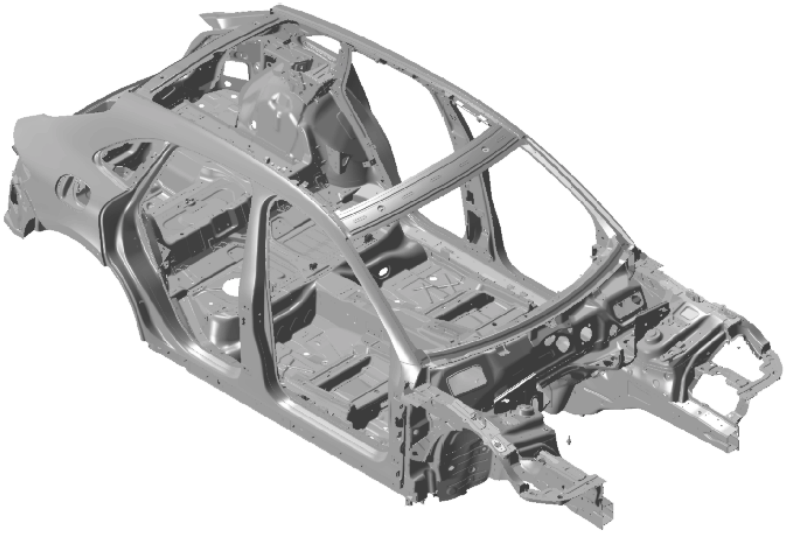

Model: 95B **Model life 2014>>**

Pos	Part Number	Description	Remark	Qty	Model
		Body in white			
		Prime coated			
		Sealed			
		with			
		Underbody protection			
		without			
		Doors/lids/wings			
		Bodyshells can only			
		only available from current			
		Model year available			
		The data required			
		for your order			
		Can be found on the			
		Vehicle data carrier			
		Please indicate this data			
		in your order			
A	-	Vehicle data carrier			
B		Vehicle Ident. No.			
C		Order type			
D		Country equipment			
E		Optional extras			
F		Additional applications			
1	95B 800 701 Y	Body in white		1	
	95B 800 701 Y GRV	Prime coated			

Illustration: 801-02

PORSCHE

Model: 95B **Model life 2014>>**

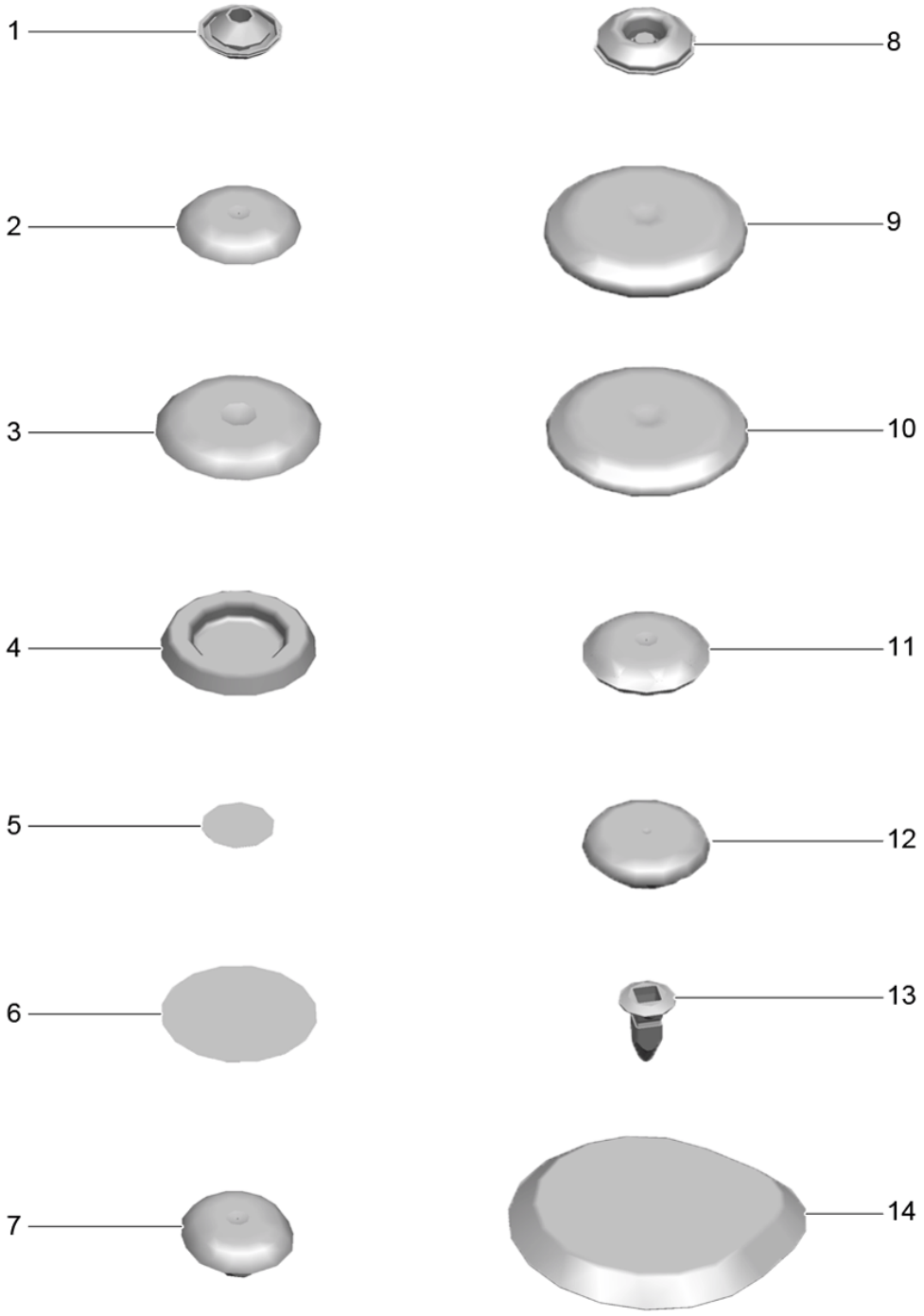

Illustration: 801-02

PORSCHE

Model: 95B **Model life 2014>>**

Pos	Part Number	Description	Remark	Qty	Model
		Stopper			
1	955 504 281 00	Stopper 10 MM		1	
2	955 504 182 00	Stopper 20 MM		1	
3	955 504 183 00	Stopper 30 MM		1	
4	999 703 195 40	Rubber sleeve 30 MM		1	
5	000 043 302 59	Adhesive plate 19 MM		1	
6	999 911 741 31	Adhesive plate 40 MM		1	
7	955 504 185 00	Stopper 15 MM		1	
8	999 703 556 40	Lid 15 MM		1	
9	7L0 899 191	Lid 41 MM		1	
10	N 909 649 02	Lid 40 MM		1	
11	7L0 899 187	Stopper 19,8 MM		1	
12	N 105 151 01	Lid 25 MM		1	
13	N 908 214 01	Expander nut 7,5 X 7,5		1	
14	95B 723 380	Stopper		1	

Illustration: 801-10

Model: 95B **Model life 2014>>**

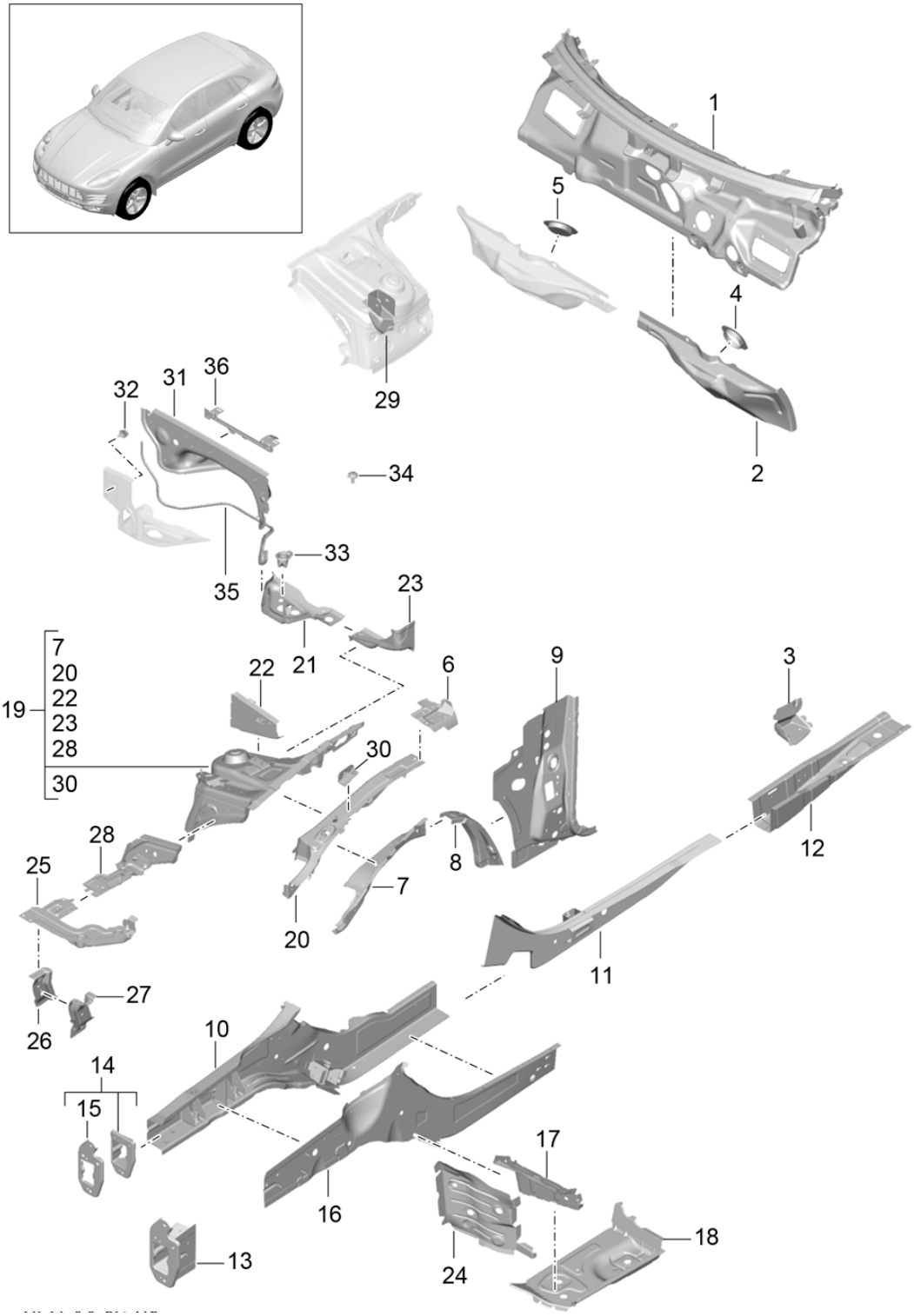

Model: 95B **Model life 2014>>**

Pos	Part Number	Description	Remark	Qty	Model
		Body front section			
		Single parts			
1	95B 803 147 Y	Firewall	/LL	1	IL0L
	95B 803 147 Y GRV	Prime coated			
(1)	95B 803 147 AY	Firewall	/RL	1	IL0R
	95B 803 147 AY GRV	Prime coated			
2	95B 802 019 Y	Bridge	/L	1	
		Tunnel			
	95B 802 019 Y GRV	Prime coated			
(2)	95B 802 020 Y	Bridge	/R	1	
		Tunnel			
	95B 802 020 Y GRV	Prime coated			
3	95B 802 117 Y	Bracket	/L	1	
		Bridge			
		Tunnel			
	95B 802 117 Y GRV	Prime coated			
(3)	95B 802 118 Y	Bracket	/R	1	
		Bridge			
		Tunnel			
	95B 802 118 Y GRV	Prime coated			
4	8K0 805 479 B	Reinforcement		1	
		Steering column			
	8K0 805 479 B GRV	Prime coated			
5	8K0 805 479 C	Reinforcement		1	
		Steering column			
	8K0 805 479 C GRV	Prime coated			
6	95B 821 227 AY	Bracket	/L	1	
		Wing			
	95B 821 227 AY GRV	Prime coated			
(6)	95B 821 228 AY	Bracket	/R	1	
		Wing			
	95B 821 228 AY GRV	Prime coated			
7	95B 805 029 Y	Closing element	/L	1	
	95B 805 029 Y GRV	Prime coated			
-	95B 804 985 A	Deformation element	/L	1	
		Closing element			
-	95B 806 655	Guide	/L	1	
		Bowden cable			
(7)	95B 805 030 Y	Closing element	/R	1	
	95B 805 030 Y GRV	Prime coated			
-	95B 804 986 A	Deformation element	/R	1	
		Closing element			
-	95B 806 656	Guide	/R	1	
		Bowden cable			
8	95B 803 135 Y	A-pillar	/L	1	
		Gusset plate			
	95B 803 135 Y GRV	Prime coated			
(8)	95B 803 136 Y	A-pillar	/R	1	
		Gusset plate			
	95B 803 136 Y GRV	Prime coated			
9	95B 802 123 Y	A-pillar	/L	1	
		Inner			
	95B 802 123 Y GRV	Prime coated			
(9)	95B 802 124 Y	A-pillar	/R	1	
		Inner			
	95B 802 124 Y GRV	Prime coated			
10	95B 803 103 Y	Side member	/L -15	1	
		Front			
	95B 803 103 Y GRV	Prime coated			
(10)	95B 803 103 AY	Side member	/L 16-	1	
		Front			
	95B 803 103 AY GRV	Prime coated			
(10)	95B 803 104 Y	Side member	/R -15	1	

Model: 95B **Model life 2014>>**

Pos	Part Number	Description	Remark	Qty	Model
		Front			
	95B 803 104 Y GRV	Prime coated			
(10)	95B 803 104 AY	Side member	/R 16-	1	
		Front			
	95B 803 104 AY GRV	Prime coated			
11	95B 804 029 Y	Reinforcement	/L -15	1	
		Side member			
		Front			
	95B 804 029 Y GRV	Prime coated			
(11)	95B 804 189 Y	Reinforcement	/L 16-	1	
		Side member			
		Front			
	95B 804 189 Y GRV	Prime coated			
(11)	95B 804 030 Y	Reinforcement	/R -15	1	
		Side member			
		Front			
	95B 804 030 Y GRV	Prime coated			
(11)	95B 804 190 Y	Reinforcement	/R 16-	1	
		Side member			
		Front			
	95B 804 190 Y GRV	Prime coated			
12	95B 803 107 Y	End plate	/L	1	
		Side member			
		Front			
	95B 803 107 Y GRV	Prime coated			
(12)	8R0 803 108	End plate	/R	1	
		Side member			
		Front			
	8R0 803 108 GRV	Prime coated			
13	95B 803 101 Y	Side member	/L	1	
		Front			
		Sub-part			
		Service solution			
	95B 803 101 Y GRV	Prime coated			
(13)	95B 803 102 Y	Side member	/R	1	
		Front			
		Sub-part			
		Service solution			
	95B 803 102 Y GRV	Prime coated			
14	95B 805 677 Y	Mounting	/L	1	
		Impact absorber			
		Front			
		Complete			
	95B 805 677 Y GRV	Prime coated			
(14)	95B 805 678 Y	Mounting	/R	1	
		Impact absorber			
		Front			
		Complete			
	95B 805 678 Y GRV	Prime coated			
15	95B 805 765 Y	Impact absorber plate	/L	1	
		Front			
	95B 805 765 Y GRV	Prime coated			
(15)	95B 805 766 Y	Impact absorber plate	/R	1	
		Front			
	95B 805 766 Y GRV	Prime coated			
16	95B 803 717 Y	Closing element	/L	1	
		Front			
	95B 803 717 Y GRV	Prime coated			
(16)	95B 803 718 Y	Closing element	/R	1	
		Front			
	95B 803 718 Y GRV	Prime coated			
17	8R0 803 697	Reinforcement	/L	1	
		Left			

Model: 95B **Model life 2014>>**

Pos	Part Number	Description	Remark	Qty	Model
	8R0 803 697 GRV	Prime coated			
(17)	8R0 803 698	Reinforcement Right	/R	1	
	8R0 803 698 GRV	Prime coated			
18	95B 802 171 Y	Mounting Left	/L -15	1	
	95B 802 171 Y GRV	Prime coated			
(18)	95B 802 171 BY	Mounting Left	/L 16-	1	
	95B 802 171 BY GRV	Prime coated			
(18)	95B 802 172 Y	Mounting Right	/R -15	1	
	95B 802 172 Y GRV	Prime coated			
(18)	95B 802 172 BY	Mounting Right	/R 16-	1	
	95B 802 172 BY GRV	Prime coated			
19	95B 805 139 Y	Mounting Spring strut	/L -15	1	
	95B 805 139 Y GRV	Prime coated			
(19)	95B 805 139 AY	Mounting Spring strut	/L 16-	1	
	95B 805 139 AY GRV	Prime coated			
(19)	95B 805 140 Y	Mounting Spring strut	/R -15	1	
	95B 805 140 Y GRV	Prime coated			
(19)	95B 805 140 AY	Mounting Spring strut	/R 16-	1	
	95B 805 140 AY GRV	Prime coated			
20	95B 805 303 Y	Filler plate Spring strut	/L -15	1	
	95B 805 303 Y GRV	Prime coated			
(20)	95B 805 303 AY	Filler plate Spring strut	/L 16-	1	
	95B 805 303 AY GRV	Prime coated			
(20)	95B 805 304 Y	Filler plate Spring strut	/R -15	1	
	95B 805 304 Y GRV	Prime coated			
(20)	95B 805 304 AY	Filler plate Spring strut	/R 16-	1	
	95B 805 304 AY GRV	Prime coated			
21	95B 805 275 Y	Plenum panel Left	/L	1	
	95B 805 275 Y GRV	Prime coated			
(21)	95B 805 276 Y	Plenum panel Right	/R	1	
	95B 805 276 Y GRV	Prime coated			
22	95B 805 323 Y	Support Plenum panel	/L	1	
	95B 805 323 Y GRV	Prime coated			
(22)	95B 805 324 Y	Support Plenum panel	/R	1	
	95B 805 324 Y GRV	Prime coated			
23	95B 805 147 Y	Wheel housing Front	/L	1	
	95B 805 147 Y GRV	Prime coated			
(23)	95B 805 148 Y	Wheel housing Front	/R	1	
	95B 805 148 Y GRV	Prime coated			
24	95B 805 263 AY	Extension Wheel housing Front	/L	1	
	95B 805 263 AY GRV	Prime coated			
(24)	95B 805 122 AY	Extension	/R	1	

Model: 95B **Model life 2014>>**

Pos	Part Number	Description	Remark	Qty	Model
		Wheel housing			
		Front			
	95B 805 122 AY GRV	Prime coated			
25	95B 805 475 Y	Strut	/L	1	
		Headlamp			
	95B 805 475 Y GRV	Prime coated			
(25)	95B 805 476 Y	Strut	/R	1	
		Headlamp			
	95B 805 476 Y GRV	Prime coated			
26	95B 805 831 Y	Support	/L	1	
		Strut			
		Headlamp			
	95B 805 831 Y GRV	Prime coated			
(26)	95B 805 832 Y	Support	/R	1	
		Strut			
		Headlamp			
	95B 805 832 Y GRV	Prime coated			
27	95B 803 691 Y	Support	/L	1	
		Side member			
		Front			
	95B 803 691 Y GRV	Prime coated			
(27)	95B 803 692 Y	Support	/R	1	
		Side member			
		Front			
	95B 803 692 Y GRV	Prime coated			
28	95B 805 457 Y	Support	/L -15	1	
		Side member			
		Front			
		Upper			
	95B 805 457 Y GRV	Prime coated			
(28)	95B 805 457 AY	Support	/L 16-	1	
		Side member			
		Front			
		Upper			
	95B 805 457 AY GRV	Prime coated			
(28)	95B 805 458 Y	Support	/R -15	1	
		Side member			
		Front			
		Upper			
	95B 805 458 Y GRV	Prime coated			
(28)	95B 805 458 AY	Support	/R 16-	1	
		Side member			
		Front			
		Upper			
	95B 805 458 AY GRV	Prime coated			
29	95B 805 848 BY	Bracket		1	
		Bracket			
	95B 805 848 BY GRV	Prime coated			
30	95B 823 401 Y	Bearing bracket	/L	1	
		Damper			
	95B 823 401 Y GRV	Prime coated			
(30)	95B 823 402 Y	Bearing bracket	/R	1	
		Damper			
	95B 823 402 Y GRV	Prime coated			
31	95B 819 523 B	Plenum panel		1	
		Firewall			
(31)	95B 819 523 C	Plenum panel		1	
		Firewall			
32	N 909 266 01	Tie-wrap		1	
		Mounting parts			
		Plenum panel			
33	4F0 805 271	Water drain valve		2	
		Plenum panel			

Model: 95B **Model life 2014>>**

Pos	Part Number	Description	Remark	Qty	Model
34	N 910 423 02	Lens-head screw Plenum panel		1	
35	95B 819 532	Gasket Plenum panel Firewall Information available		1	
36	95B 819 079	Retaining bar Plenum panel		1	
37	N 908 877 03	Hexagon nut Plenum panel		2	
-	000 043 206 30	Adhesive		1	
-	000 043 204 85	Cavity preservation 400 ML		X	

Illustration: 801-15

PORSCHE

Model: 95B **Model life 2014>>**

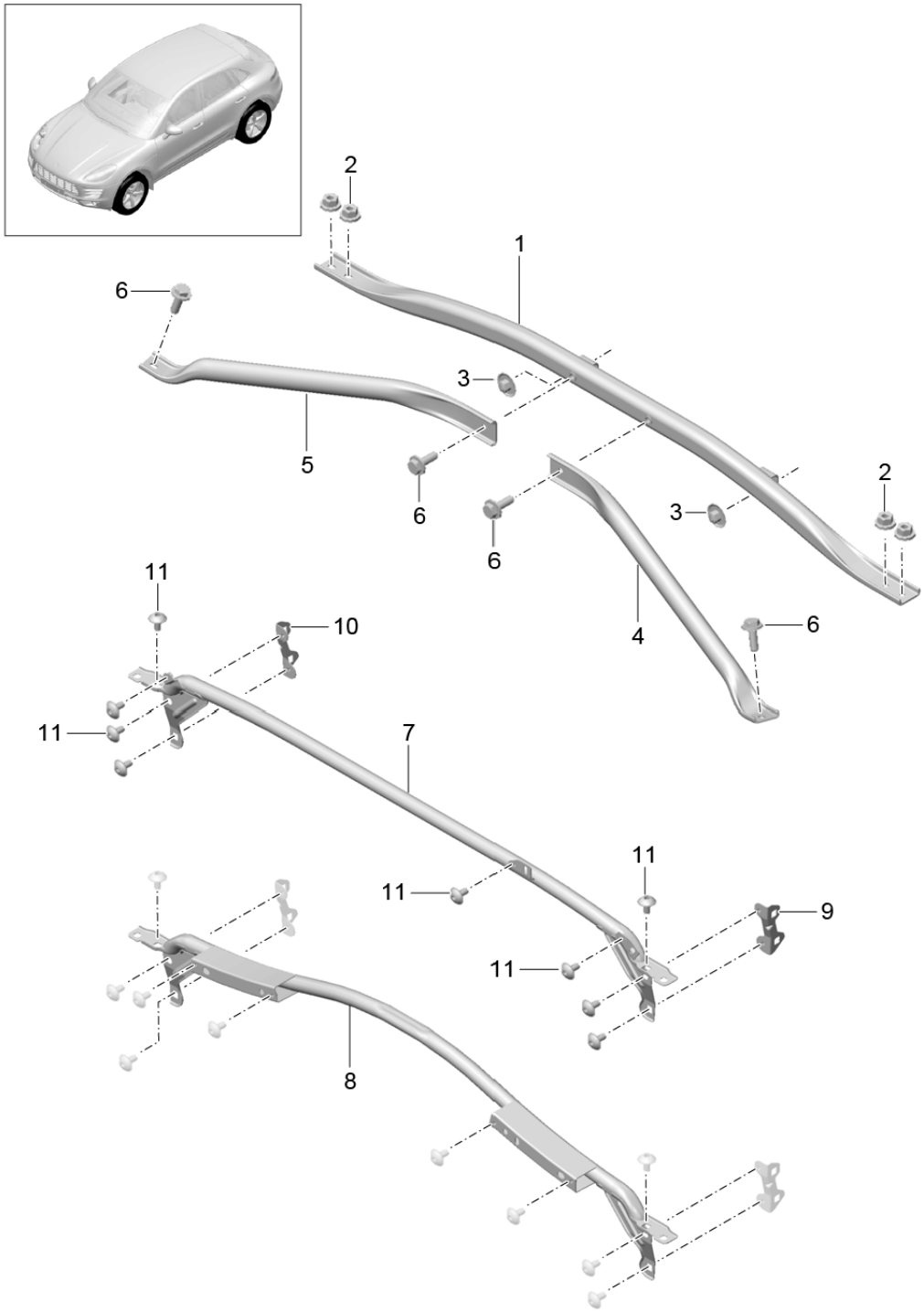

Illustration: 801-15

Model: 95B **Model life 2014>>**

Pos	Part Number	Description	Remark	Qty	Model
		Strut Body front section			
1	8R0 805 629 F	Reinforcement Dome strut		1	
2	N 904 862 04	Hexagon nut M8 Assembly Strut		4	
3	N 907 088 03	Speed nut Assembly Strut		2	
4	8R0 805 619	Reinforcement Strut	/L	1	
5	8R0 805 620	Reinforcement Strut	/R	1	
6	N 906 439 06	Hexagon-head bolt M8X25 Assembly Reinforcement		4	
7	95B 803 227	Strut Front		1	
8	95B 803 228	Strut Front		1	
9	95B 804 473	Fastening angle Strut Front	/L	1	
10	95B 804 474	Fastening angle Strut Front	/R	1	
11	999 073 357 01	Oval-head screw M6X12 Assembly POS 7 POS 8 POS 9 POS 10		10	

Illustration: 801-20

PORSCHE

Model: 95B **Model life 2014>>**

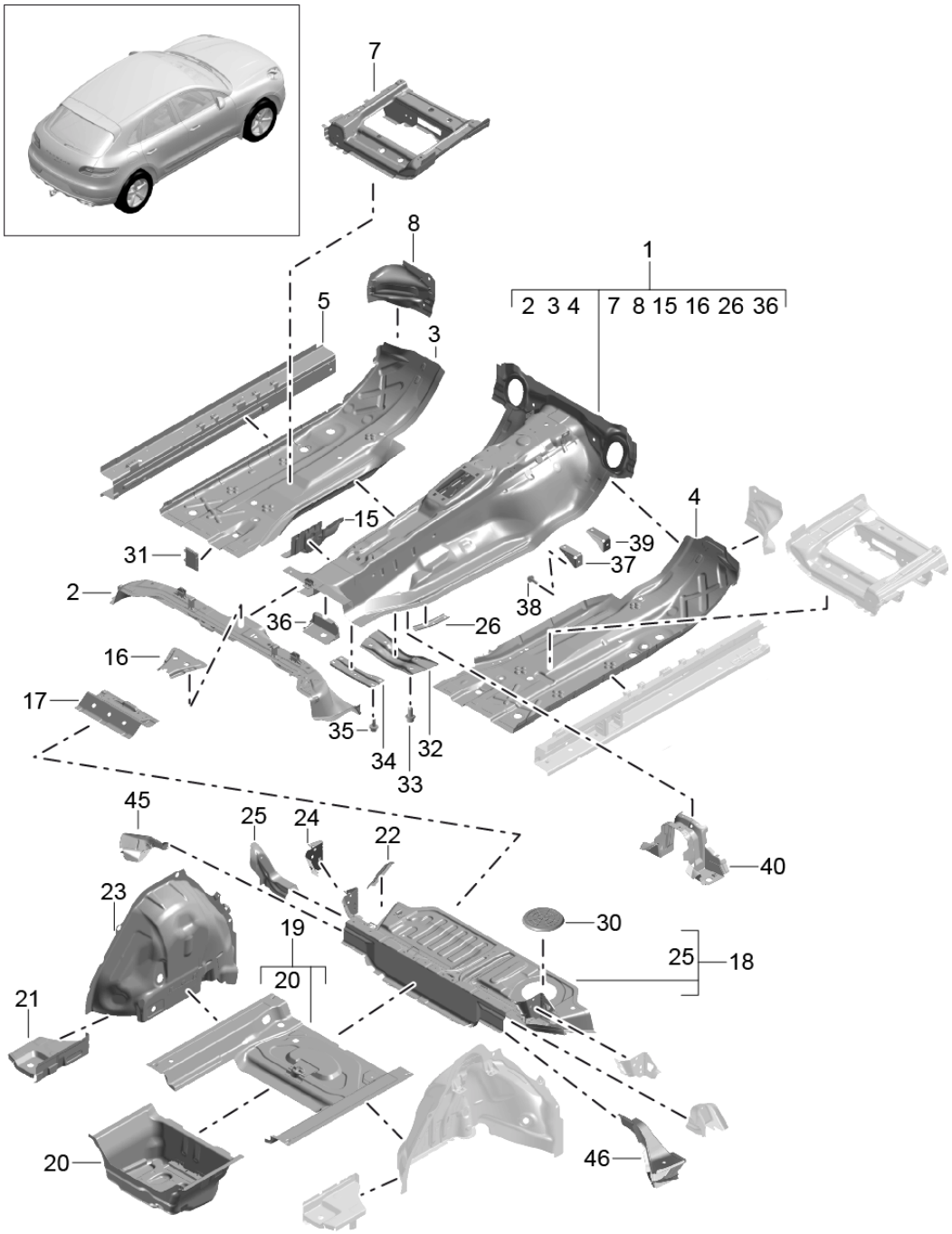

Model: 95B **Model life 2014>>**

Pos	Part Number	Description	Remark	Qty	Model
		Floor			
1	95B 803 061 Y	Floorpan		1	
		Front			
		Complete			
	95B 803 061 Y GRV	Prime coated			
2	95B 802 081 Y	Terminal piece		1	
		Floor			
		Front			
	95B 802 081 Y GRV	Prime coated			
3	95B 803 073 Y	Floorpan	/L	1	
		Front			
		Left			
	95B 803 073 Y GRV	Prime coated			
4	95B 803 074 Y	Floorpan	/R	1	
		Front			
		Right			
	95B 803 074 Y GRV	Prime coated			
5	95B 803 751 Y	Door sill	/L	1	
		Inner			
	95B 803 751 Y GRV	Prime coated			
(5)	95B 803 752 Y	Door sill	/R	1	
		Inner			
	95B 803 752 Y GRV	Prime coated			
7	95B 803 379 Y	Cross member	/L	1	
		Seat			
	95B 803 379 Y GRV	Prime coated			
(7)	95B 803 380 Y	Cross member	/R	1	
		Seat			
	95B 803 380 Y GRV	Prime coated			
8	8K0 810 253	Cross member	/L	1	
		Wheel housing			
		Front			
	8K0 810 253 GRV	Prime coated			
(8)	8K0 810 254	Cross member	/R	1	
		Wheel housing			
		Front			
	8K0 810 254 GRV	Prime coated			
15	95B 802 895 Y	Cross member	/L	1	
		Front			
	95B 802 895 Y GRV	Prime coated			
(15)	95B 802 894 Y	Cross member	/R	1	
		Front			
	95B 802 894 Y GRV	Prime coated			
16	95B 803 329 AY	Support		1	
		Strut			
	95B 803 329 AY GRV	Prime coated			
17	95B 802 893 Y	Cross member		1	
		Centre part			
	95B 802 893 Y GRV	Prime coated			
18	95B 802 087 Y	Floorpan		1	
		Rear			
		Front			
	95B 802 087 Y GRV	Prime coated			
19	95B 802 088 Y	Floorpan		1	
		Rear			
		Rear			
	95B 802 088 Y GRV	Prime coated			
20	95B 804 869 Y	Bracket		1	
		Battery box			
	95B 804 869 Y GRV	Prime coated			
-		Battery box		1	
		See group			
		9/02/05			

Model: 95B **Model life 2014>>**

Pos	Part Number	Description	Remark	Qty	Model
21	95B 802 089 Y	Floor section	/L	1	
	95B 802 089 Y GRV	Prime coated			
(21)	95B 802 090 Y	Floor section	/R	1	
	95B 802 090 Y GRV	Prime coated			
22	95B 803 297 Y	Reinforcement		1	
		Floor			
		Rear			
	95B 803 297 Y GRV	Prime coated			
23	95B 810 363 Y	Wheel housing	/L	1	
		Rear			
		Inner			
	95B 810 363 Y GRV	Prime coated			
(23)	95B 810 364 Y	Wheel housing	/R	1	
		Rear			
		Inner			
	95B 810 364 Y GRV	Prime coated			
24	95B 802 231 Y	Support	/L	1	
		Backrest			
		Rear			
	95B 802 231 Y GRV	Prime coated			
(24)	95B 802 232 Y	Support	/R	1	
		Backrest			
		Rear			
	95B 802 232 Y GRV	Prime coated			
25	95B 804 483 Y	Reinforcement	/L	1	
		Wheel housing			
		Rear			
	95B 804 483 Y GRV	Prime coated			
(25)	95B 804 484 Y	Reinforcement	/R	1	
		Wheel housing			
		Rear			
	95B 804 484 Y GRV	Prime coated			
26	95B 803 811 Y	Reinforcement	/L	1	
		Floor section			
	95B 803 811 Y GRV	Prime coated			
(26)	95B 803 812 Y	Reinforcement	/R	1	
		Floor section			
	95B 803 812 Y GRV	Prime coated			
30	298 201 063	Lid		1	
		Sender			
		Fuel tank			
31	8R0 809 025 B	Foam part		4	
		Door sill			
		Inner			
32	95B 804 813	Support	-15	1	
		Tunnel			
		Front			
(32)	9A7 804 813 01	Support	16-	1	
		Tunnel			
		Front			
33	N 910 230 02	Pan-head screw	-15	4	
		M12X25			
		POS32			
(33)	N 912 011 02	Pan-head screw	16-	8	
		M12X25			
		POS32			
34	8K0 803 183 B	Cross member		1	
		Tunnel			
		Rear			
35	N 909 767 02	Hexagon-head bolt		1	
		M10X30			
		POS34			
36	8R0 804 417	Filler plate		1	

Model: 95B **Model life 2014>>**

Pos	Part Number	Description	Remark	Qty	Model
		Tunnel			
37	95B 804 367	Support		1	
		Bracket			
		Transmission			
38	N 909 944 02	Hexagon-head bolt		2	
		M8X30			
		POS37			
39	8R0 804 369 A	Support		1	
		Bracket			
		Transmission			
40	95B 804 368 Y	Reinforcement	16-	1	
		Tunnel			
	95B 804 368 Y GRV	Prime coated			
45	95B 803 531 Y	Cross member	/L	1	
		Terminal piece			
	95B 803 531 Y GRV	Prime coated			
46	8R0 803 532	Cross member	/R	1	
		Centre			
		Right			
	8R0 803 532 GRV	Prime coated			
-	000 043 305 51	Cavity preservation		X	
		400 ML			

Illustration: 801-25

PORSCHE

Model: 95B **Model life 2014>>**

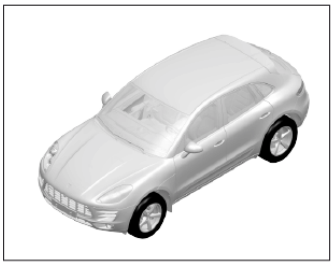

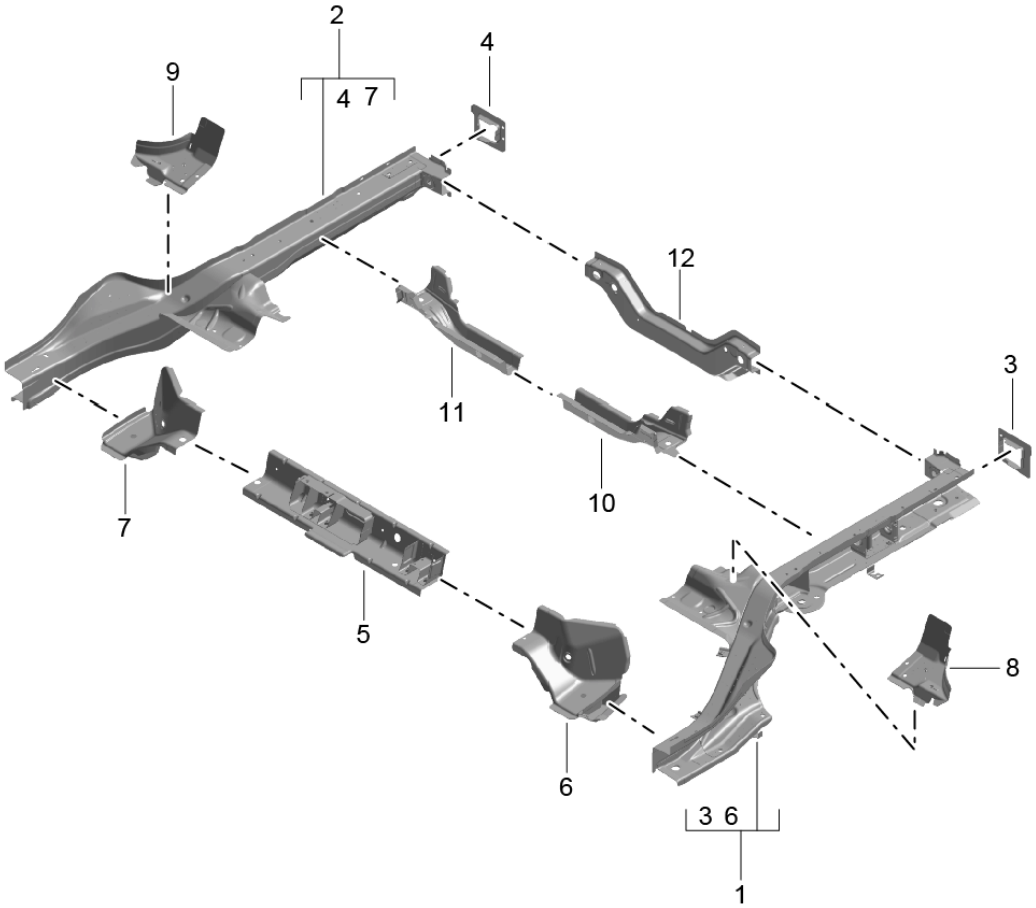

Model: 95B **Model life 2014>>**

Pos	Part Number	Description	Remark	Qty	Model
		Frame			
1	95B 803 401 Y	Side member	/L -15	1	
	95B 803 401 Y GRV	Prime coated			
(1)	95B 803 401 AY	Side member	/L 16-	1	
	95B 803 401 AY GRV	Prime coated			
2	95B 803 402 Y	Side member	/R -15	1	
	95B 803 402 Y GRV	Prime coated			
(2)	95B 803 402 AY	Side member	/R 16-	1	
	95B 803 402 AY GRV	Prime coated			
3	95B 803 499 Y	Closing element	/L	1	
	95B 803 499 Y GRV	Prime coated			
4	95B 803 500 Y	Closing element	/R	1	
	95B 803 500 Y GRV	Prime coated			
5	95B 803 535 Y	Cross member	/L	1	
		for			
		Floor			
		Centre			
	95B 803 535 Y GRV	Prime coated			
6	95B 803 531 Y	Cross member	/L	1	
		Centre			
		Left			
	95B 803 531 Y GRV	Prime coated			
7	8R0 803 532	Cross member	/R	1	
		Centre			
		Right			
	8R0 803 532 GRV	Prime coated			
8	95B 803 579 Y	Reinforcement	/L	1	
	95B 803 579 Y GRV	Prime coated			
9	95B 803 580 Y	Reinforcement	/R	1	
	95B 803 580 Y GRV	Prime coated			
10	8R0 803 347 A	Cross member	/L	1	
		Spare wheel			
	8R0 803 347 A GRV	Prime coated			
11	8R0 803 348 A	Cross member	/R	1	
		Spare wheel			
	8R0 803 348 A GRV	Prime coated			
12	95B 803 671 Y	Cross member		1	
		Reinforcement			
		Rear			
	95B 803 671 Y GRV	Prime coated			
-	000 043 305 51	Cavity preservation		X	
		400 ML			

Illustration: 801-30

PORSCHE

Model: 95B **Model life 2014>>**

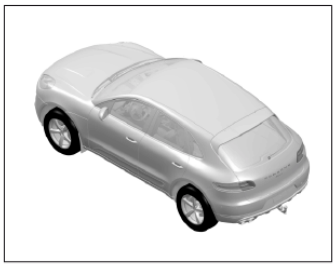

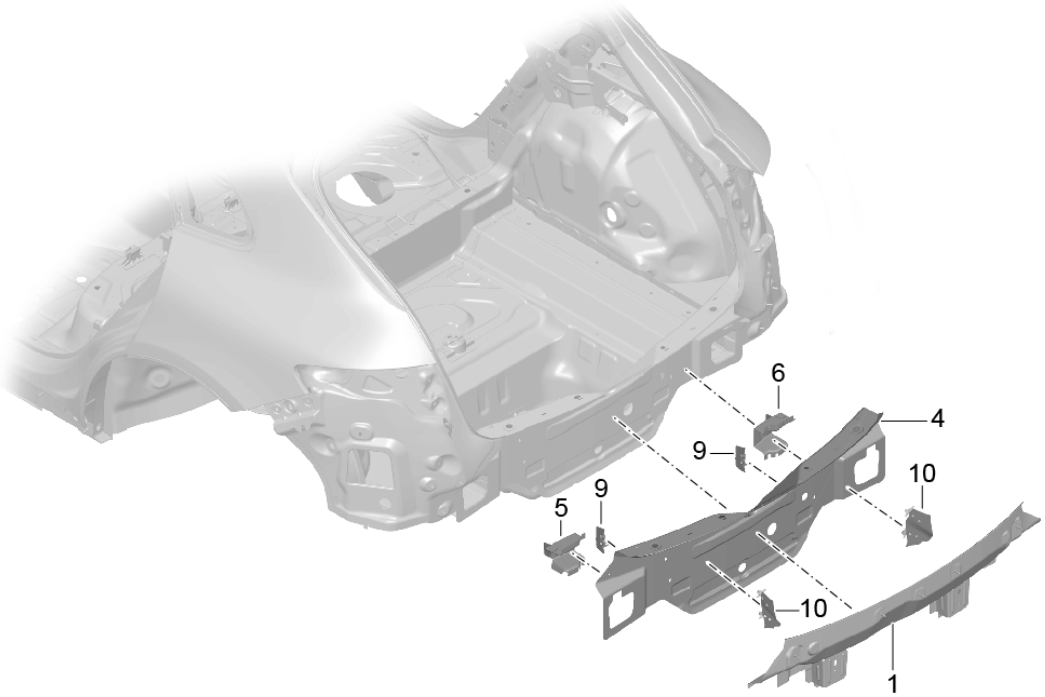

Illustration: 801-30

PORSCHE

Model: 95B **Model life 2014>>**

Pos	Part Number	Description	Remark	Qty	Model
		Rear end			
1	95B 813 303 Y	Terminal piece		1	
	95B 813 303 Y GRV	Prime coated			
4	95B 813 311 Y	Lock carrier		1	
		Rear			
	95B 813 311 Y GRV	Prime coated			
5	8R0 803 383 B	Support	/L	1	
		Lock carrier			
		Rear			
	8R0 803 383 B GRV	Prime coated			
6	8R0 803 384 B	Support	/R	1	
		Lock carrier			
		Rear			
	8R0 803 384 B GRV	Prime coated			
9	95B 864 539	Seal		2	
		Terminal piece			
10	95B 864 561	Seal		2	
		Bracket			
		Terminal piece			
-	000 043 206 30	Adhesive		1	
-	000 043 305 51	Cavity preservation		X	
		400 ML			

Illustration: 801-40

PORSCHE

Model: 95B **Model life 2014>>**

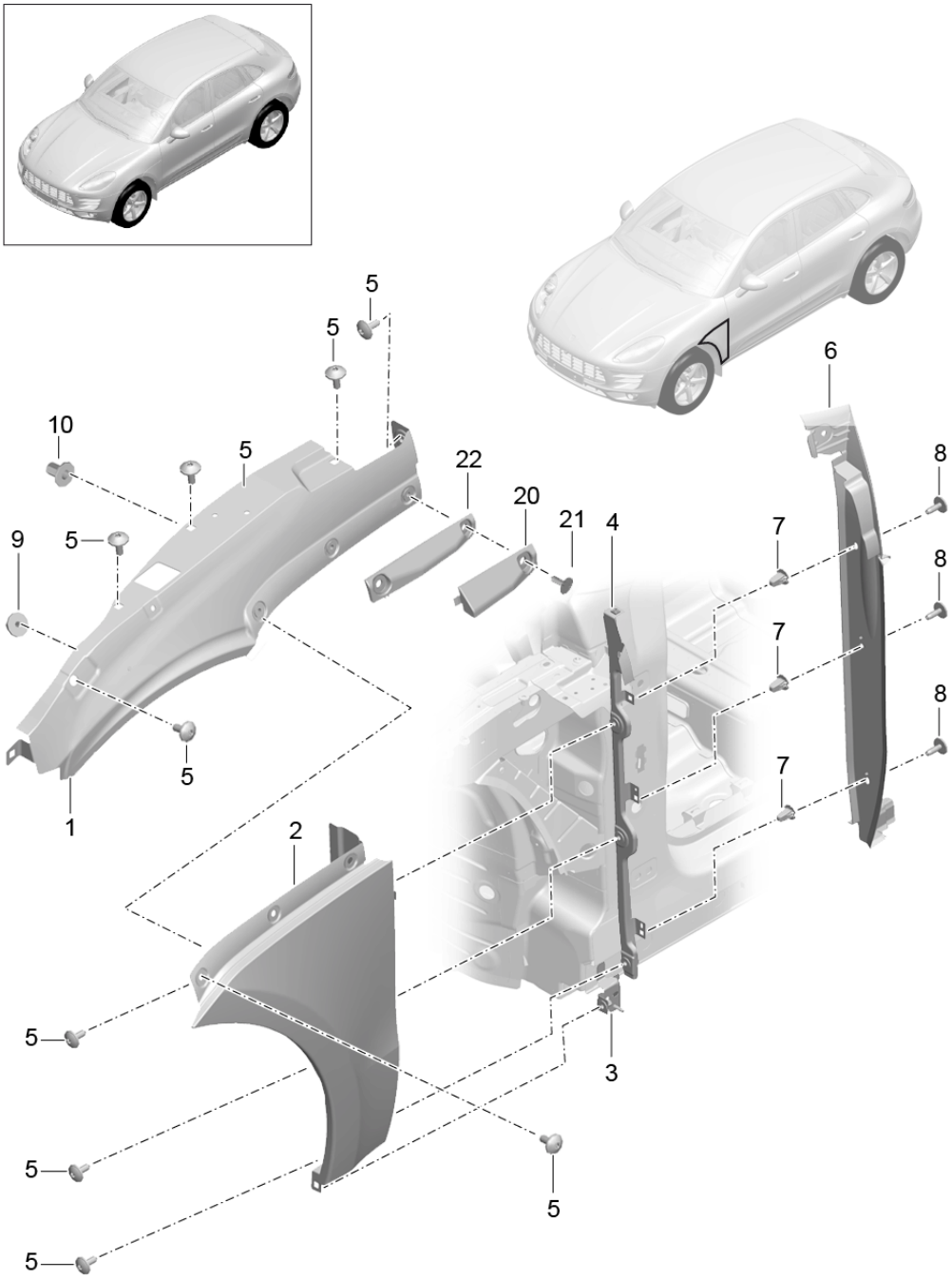

Model: 95B **Model life 2014>>**

Pos	Part Number	Description	Remark	Qty	Model
		Wing			
1	95B 821 103 AY	Wing	/L	1	
		Left			
		Upper			
	95B 821 103 AY GRV	Prime coated			
1	95B 821 103 BY	Wing	/L	1	
		Left			
		Upper			
	95B 821 103 BY GRV	Prime coated			
(1)	95B 821 104 AY	Wing	/R	1	
		Right			
		Upper			
	95B 821 104 AY GRV	Prime coated			
(1)	95B 821 104 BY	Wing	/R	1	
		Right			
		Upper			
	95B 821 104 BY GRV	Prime coated			
2	95B 821 101 Y	Wing	/L	1	
		Left			
		Lower			
	95B 821 101 Y GRV	Prime coated			
2	95B 821 101 AY	Wing	/L	1	
		Left			
		Lower			
	95B 821 101 AY GRV	Prime coated			
2	95B 821 101 BY	Wing	/L	1	
		Left			
		Lower			
	95B 821 101 BY GRV	Prime coated			
(2)	95B 821 102 Y	Wing	/R	1	
		Right			
		Lower			
	95B 821 102 Y GRV	Prime coated			
(2)	95B 821 102 AY	Wing	/R	1	
		Right			
		Lower			
	95B 821 102 AY GRV	Prime coated			
(2)	95B 821 102 BY	Wing	/R	1	
		Right			
		Lower			
	95B 821 102 BY GRV	Prime coated			
3	95B 810 659 Y	Support	/L	1	
		Wing			
		And			
		Sill cover			
	95B 810 659 Y GRV	Prime coated			
(3)	95B 810 660 Y	Support	/R	1	
		Wing			
		And			
		Sill cover			
	95B 810 660 Y GRV	Prime coated			
4	95B 809 573 AY	Rail	/L	1	
		Wing			
	95B 809 573 AY GRV	Prime coated			
(4)	95B 809 574 AY	Rail	/R	1	
		Wing			
	95B 809 574 AY GRV	Prime coated			
5	N 910 423 02	Lens-head screw		26	
		M 6 X 16			
6	95B 854 777 B	Cover	/L	1	
		Wing			
	95B 854 777 B 1E0	Satin black			
(6)	95B 854 778 B	Cover	/R	1	

Model: 95B **Model life 2014>>**

Pos	Part Number	Description	Remark	Qty	Model
		Wing			
	95B 854 778 B 1E0	Satin black			
7	WHT 004 935	Expander nut 5X15,5		X	
8	N 909 747 01	Oval-head sheetmetal screw TP5X16		X	
9	N 907 579 01	Nut		X	
10	N 908 173 02	Blind rivet nut M6		8	
20	95B 823 417	Guide piece Short	/L	1	
(20)	95B 823 418	Guide piece Short	/R	1	
21	N 910 423 02	Lens-head screw Black M6X16		X	
22	95B 821 235	Guide piece Wing	/L	1	
(22)	95B 821 236	Guide piece Wing	/R	1	

Illustration: 801-45

PORSCHE

Model: 95B **Model life 2014>>**

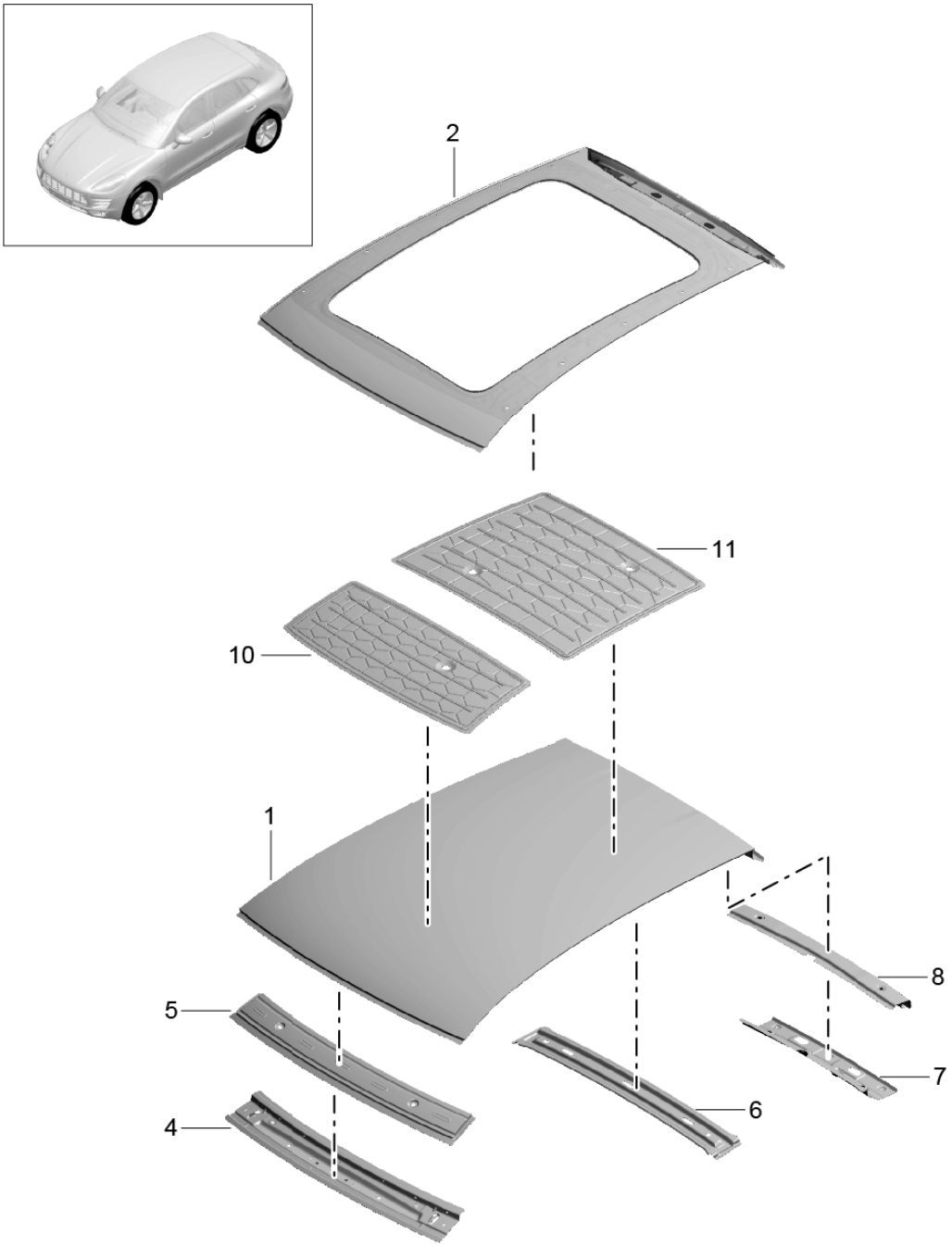

Model: 95B **Model life 2014>>**

Pos	Part Number	Description	Remark	Qty	Model
		Roof Cowl			
1	95B 817 111 AY	Roof		1	IQU0/QV0/QV1 IQV3/QV5/3FA I3S0
	95B 817 111 AY GRV	Prime coated			
(1)	95B 817 101 AY	Roof		1	IQU0/QV0/QV1 IQV3/QV5/3FA I3S1/3S5/5W1 I5W4
	95B 817 101 AY GRV	Prime coated			
(1)	95B 817 101 BY	Roof		1	IQV4/QV8/3FA I3S1/3S5/5W1 I5W4
	95B 817 101 BY GRV	Prime coated			
(1)	95B 817 101 CY	Roof		1	IQV4/QV8/3FA I3S0
	95B 817 101 CY GRV	Prime coated			
2	95B 817 102 Y	Roof		1	IQU0/QV0/QV1 IQV3/QV5/3FU I3S0
	95B 817 102 Y GRV	Prime coated for sliding roof			
(2)	95B 817 102 AY	Roof		1	IQU0/QV0/QV1 IQV3/QV5/3FU I3S1/3S5/5W1 I5W4
	95B 817 102 AY GRV	Prime coated for sliding roof			
(2)	95B 817 102 BY	Roof		1	IQV4/QV8/3FU I3S1/3S5/5W1 I5W4
	95B 817 102 BY GRV	Prime coated for sliding roof			
(2)	95B 817 102 CY	Roof		1	IQV4/QV8/3FU I3S0
	95B 817 102 CY GRV	Prime coated for sliding roof			
4	95B 817 122 AY	Cross member Front Inner		1	
	95B 817 122 AY GRV	Prime coated			
5	95B 817 124 Y	Cross member Front Outer		1	
	95B 817 124 Y GRV	Prime coated			
6	95B 817 465 AY	Cross member B-pillar		1	
	95B 817 465 AY GRV	Prime coated			
7	95B 817 163 Y	Cross member Rear Inner		1	
	95B 817 163 Y GRV	Prime coated			
8	95B 817 164 AY	Cross member Rear Outer		1	
	95B 817 164 AY GRV	Prime coated			
10	95B 817 285	Reinforcement Roof Front Use also: POS12		1	I3FA

Model: 95B **Model life 2014>>**

Pos	Part Number	Description	Remark	Qty	Model
11	95B 817 120	Reinforcement Roof Rear Use also: POS12		1	I3FA
12	000 043 204 82	Adhesive		1	
-	000 043 204 85	Cavity preservation 400 ML		X	

Illustration: 801-50

Model: 95B **Model life 2014>>**

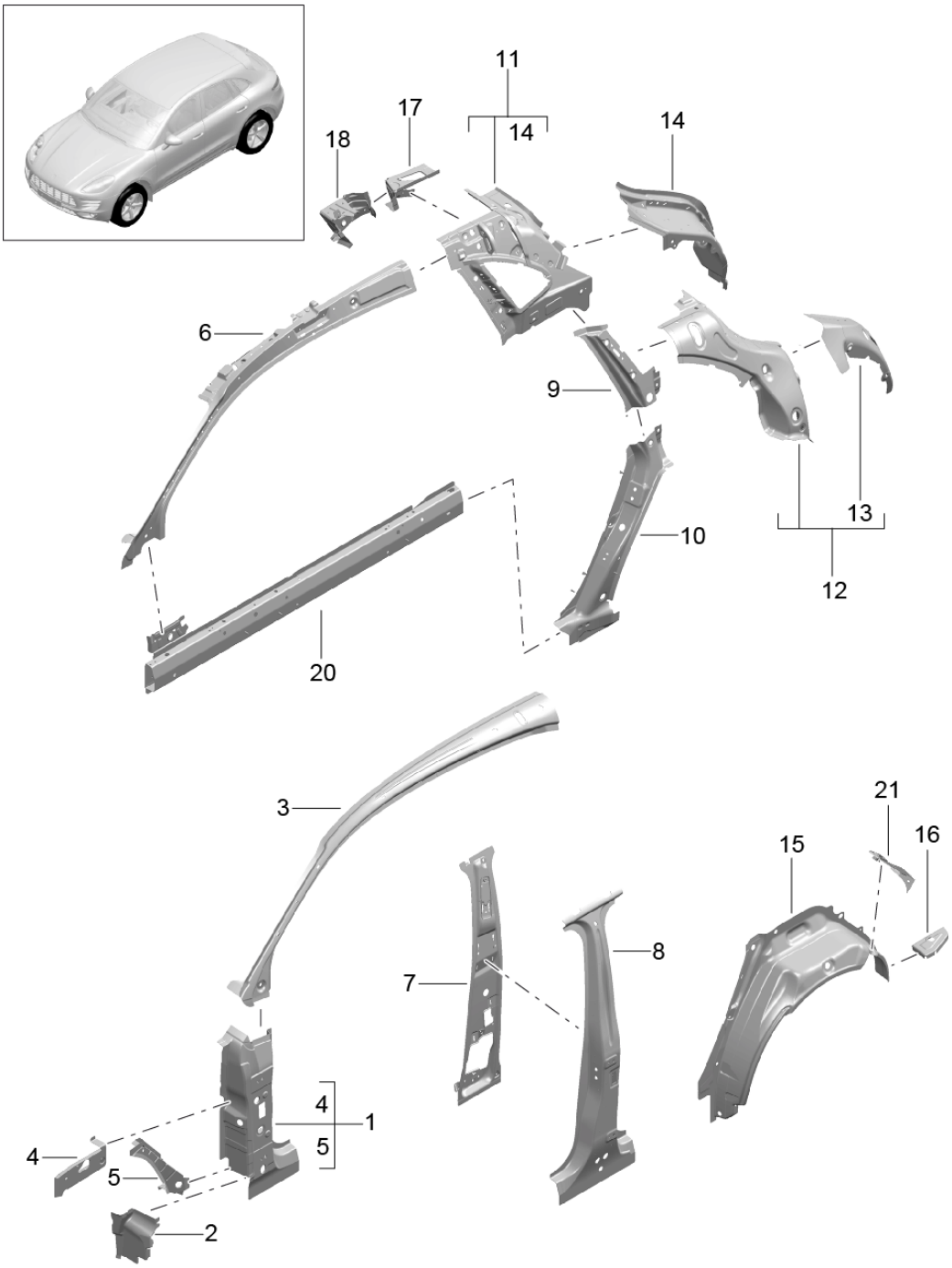

Model: 95B **Model life 2014>>**

Pos	Part Number	Description	Remark	Qty	Model
		Side section			
		Inner			
1	95B 809 201 Y	A-pillar	/L -15	1	
		Outer			
	95B 809 201 Y GRV	Prime coated			
(1)	95B 809 201 AY	A-pillar	/L 16-	1	
		Outer			
	95B 809 201 AY GRV	Prime coated			
1	95B 809 202 Y	A-pillar	/R -15	1	
		Outer			
	95B 809 202 Y GRV	Prime coated			
1	95B 809 202 AY	A-pillar	/R 16-	1	
		Outer			
	95B 809 202 AY GRV	Prime coated			
2	95B 803 087 Y	Closing element	/L -15	1	
		Door sill			
		Front			
	95B 803 087 Y GRV	Prime coated			
2	95B 803 099 Y	Closing element	/L 16-	1	
		Door sill			
		Front			
	95B 803 099 Y GRV	Prime coated			
(2)	95B 803 088 AY	Closing element	/R -15	1	
		Door sill			
		Front			
	95B 803 088 AY GRV	Prime coated			
(2)	95B 803 100 Y	Closing element	/R 16-	1	
		Door sill			
		Front			
	95B 803 100 Y GRV	Prime coated			
3	95B 809 199 Y	Reinforcement	/L	1	
		A-pillar			
		Upper			
	95B 809 199 Y GRV	Prime coated			
(3)	95B 809 200 Y	Reinforcement	/R	1	
		A-pillar			
		Upper			
	95B 809 200 Y GRV	Prime coated			
4	95B 809 111 Y	Reinforcement plate	/L	1	
		Side member			
		A-pillar			
		Upper			
	95B 809 111 Y GRV	Prime coated			
(4)	95B 809 112 Y	Reinforcement plate	/R	1	
		Side member			
		A-pillar			
		Upper			
	95B 809 112 Y GRV	Prime coated			
5	95B 805 143 Y	Closing element	/L	1	
		Side member			
		A-pillar			
		Upper			
	95B 805 143 Y GRV	Prime coated			
(5)	95B 805 144 Y	Closing element	/R	1	
		Side member			
		A-pillar			
		Upper			
	95B 805 144 Y GRV	Prime coated			
6	95B 810 179 AY	A-pillar	/L	1	
		Inner			
	95B 810 179 AY GRV	Prime coated			
(6)	95B 810 180 AY	A-pillar	/R	1	
		Inner			

Model: 95B **Model life 2014>>**

Pos	Part Number	Description	Remark	Qty	Model
	95B 810 180 AY GRV	Prime coated			
7	95B 809 443 Y	B-pillar Inner	/L	1	
	95B 809 443 Y GRV	Prime coated			
(7)	95B 809 444 Y	B-pillar Inner	/R	1	
	95B 809 444 Y GRV	Prime coated			
8	95B 809 607 AY	Reinforcement B-pillar Complete	/L -15	1	
	95B 809 607 AY GRV	Prime coated			
8	95B 809 607 CY	Reinforcement B-pillar Complete	/L 16-	1	
	95B 809 607 CY GRV	Prime coated			
(8)	95B 809 608 AY	Reinforcement B-pillar Complete	/R -15	1	
	95B 809 608 AY GRV	Prime coated			
9	95B 809 393 Y	Reinforcement C-pillar Upper	/L	1	
	95B 809 393 Y GRV	Prime coated			
(9)	95B 809 394 Y	Reinforcement C-pillar Upper	/R	1	
	95B 809 394 Y GRV	Prime coated			
10	95B 809 261 Y	Reinforcement C-pillar Complete	/L	1	
	95B 809 261 Y GRV	Prime coated			
(10)	95B 809 262 Y	Reinforcement C-pillar Complete	/R	1	
	95B 809 262 Y GRV	Prime coated			
11	95B 809 403 Y	Side section Inner Rear Upper	/L	1	
	95B 809 403 Y GRV	Prime coated			
(11)	95B 809 404 Y	Side section Inner Rear Upper	/R	1	
	95B 809 404 Y GRV	Prime coated			
12	95B 809 299 Y	Reinforcement D-pillar Outer	/L	1	
	95B 809 299 Y GRV	Prime coated			
(12)	95B 809 300 Y	Reinforcement D-pillar Outer	/R	1	
	95B 809 300 Y GRV	Prime coated			
13	95B 809 359 Y	Reinforcement D-pillar Lower	/L	1	
	95B 809 359 Y GRV	Prime coated			
(13)	95B 809 360 Y	Reinforcement D-pillar Lower	/R	1	
	95B 809 360 Y GRV	Prime coated			
14	95B 809 289 Y	D-pillar Inner	/L	1	

Model: 95B **Model life 2014>>**

Pos	Part Number	Description	Remark	Qty	Model
		Lower			
		Left			
	95B 809 289 Y GRV	Prime coated			
(14)	95B 809 290 Y	D-pillar	/R	1	
		Inner			
		Lower			
		Right			
	95B 809 290 Y GRV	Prime coated			
15	95B 809 411 Y	Wheel housing	/L	1	
		Rear			
		Outer			
	95B 809 411 Y GRV	Prime coated			
15	95B 809 411 AY	Wheel housing	/L	1	
		Rear			
		Outer			
	95B 809 411 AY GRV	Prime coated			
(15)	95B 809 410 Y	Wheel housing	/R	1	
		Rear			
		Outer			
	95B 809 410 Y GRV	Prime coated			
(15)	95B 809 410 AY	Wheel housing	/R	1	
		Rear			
		Outer			
	95B 809 410 AY GRV	Prime coated			
16	95B 809 347 Y	Connecting piece	/L	1	
	95B 809 347 Y GRV	Prime coated			
(16)	95B 809 348 Y	Connecting piece	/R	1	
	95B 809 348 Y GRV	Prime coated			
17	95B 809 779 AY	Bracket	/L	1	
		Belt			
		Rear			
	95B 809 779 AY GRV	Prime coated			
(17)	95B 809 780 BY	Bracket	/R	1	
		Belt			
		Rear			
	95B 809 780 BY GRV	Prime coated			
18	95B 810 163 Y	Bracket	/L	1	
		Guide			
		Belt			
		Rear			
	95B 810 163 Y GRV	Prime coated			
(18)	95B 810 164 Y	Bracket	/R	1	
		Guide			
		Belt			
		Rear			
	95B 810 164 Y GRV	Prime coated			
20	95B 809 377 Y	Door sill	/L	1	
	95B 809 377 Y GRV	Prime coated			
(20)	95B 809 378 Y	Door sill	/R	1	
	95B 809 378 Y GRV	Prime coated			
21	95B 864 681	Seal	/L	1	
		Wheel housing			
(21)	95B 864 682	Seal	/R	1	
		Wheel housing			
-	000 043 305 51	Cavity preservation		X	
		400 ML			
-	000 043 206 30	Adhesive		1	

Illustration: 801-55

PORSCHE

Model: 95B **Model life 2014>>**

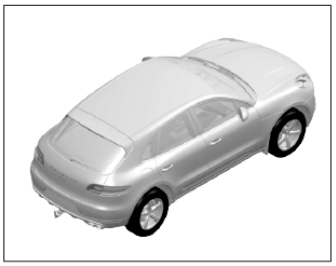

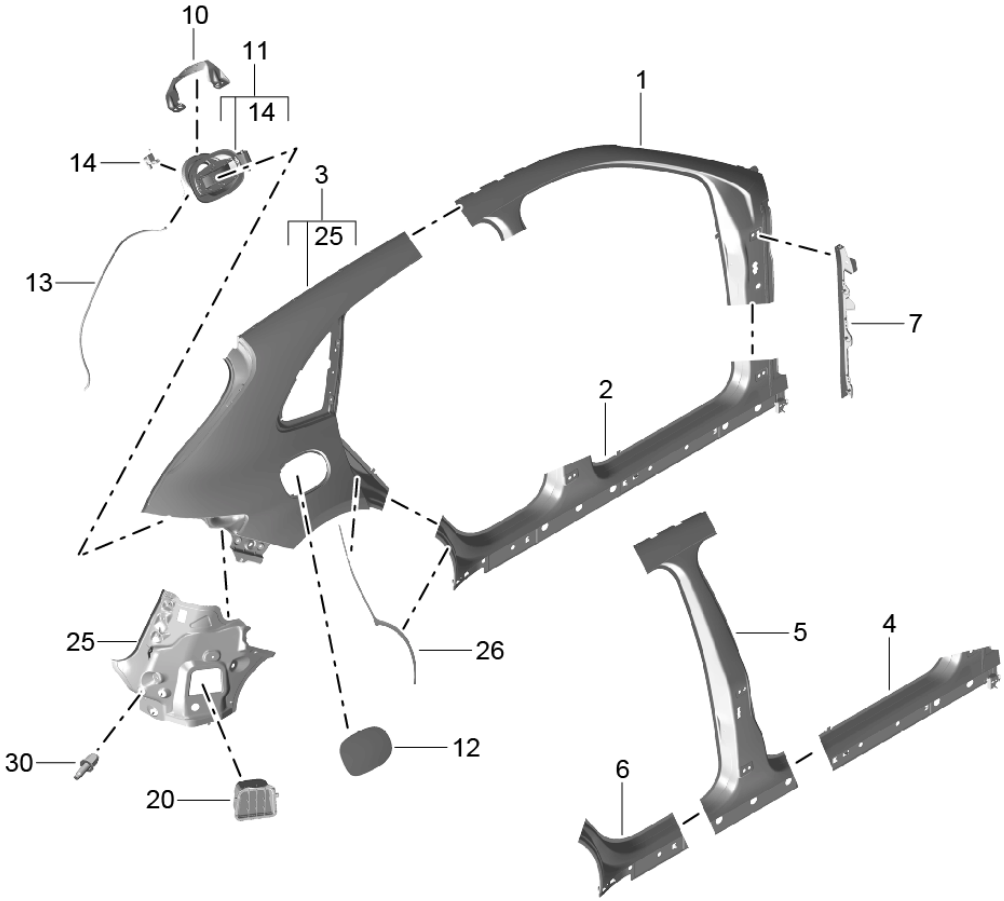

Model: 95B **Model life 2014>>**

Pos	Part Number	Description	Remark	Qty	Model
		Side section Outer			
1	95B 809 009 Y	Side section A-pillar	/L	1	
	95B 809 009 Y GRV	Prime coated Use also: POS7			
(1)	95B 809 010 Y	Side section A-pillar	/R	1	
	95B 809 010 Y GRV	Prime coated Use also: POS7			
2	95B 809 673 Y	Door sill Outer	/L -15	1	
	95B 809 673 Y GRV	Prime coated Use also: POS7			
2	95B 809 673 AY	Door sill Outer	/L 16-	1	
	95B 809 673 AY GRV	Prime coated Use also: POS7			
(2)	95B 809 674 Y	Door sill Outer	/R -15	1	
	95B 809 674 Y GRV	Prime coated Use also: POS7			
(2)	95B 809 674 AY	Door sill Outer	/R 16-	1	
	95B 809 674 AY GRV	Prime coated Use also: POS7			
3	95B 809 029 Y	Side section C-pillar	/L	1	
	95B 809 029 Y GRV	Prime coated			
(3)	95B 809 030 Y	Side section C-pillar	/R	1	
	95B 809 030 Y GRV	Prime coated			
4	95B 809 529 Y	Door sill Front	/L -15	1	
	95B 809 529 Y GRV	Prime coated			
4	95B 809 529 AY	Door sill Front	/L 16-	1	
	95B 809 529 AY GRV	Prime coated			
(4)	95B 809 530 Y	Door sill Front	/R -15	1	
	95B 809 530 Y GRV	Prime coated			
(4)	95B 809 530 AY	Door sill Front	/R 16-	1	
	95B 809 530 AY GRV	Prime coated			
5	95B 809 021 Y	Side section B-pillar	/L	1	
	95B 809 021 Y GRV	Prime coated			
(5)	95B 809 022 Y	Side section B-pillar	/R	1	
	95B 809 022 Y GRV	Prime coated			
6	95B 809 241 Y	Door sill Rear	/L	1	
	95B 809 241 Y GRV	Prime coated			
(6)	95B 809 242 Y	Door sill Rear	/R	1	
	95B 809 242 Y GRV	Prime coated			
7		Rail		1	

Model: 95B **Model life 2014>>**

Pos	Part Number	Description	Remark	Qty	Model
		See illustrations			
		8/01/40			
		POS4			
10	95B 802 305 Y	Support		1	
		Tank filler neck			
	95B 802 305 Y GRV	Prime coated			
11	95B 809 857	Module		1	IDM0/DU0/DU1
					ID43
		Fuel filler flap			
		with			
		Actuator			
		Emergency operation			
11	95B 809 857 B	Module		1	IDM0/DU0/DU1
					ID43
		Fuel filler flap			
		with			
		Actuator			
		Emergency operation			
11	95B 809 857 D	Module		1	IDM0/DU0/DU1
					ID43
		Fuel filler flap			
		with			
		Actuator			
		Emergency operation			
(11)	95B 809 857 A	Module		1	IDD7/D1V/D50
					ID51
		Fuel filler flap			
		with			
		Actuator			
		Emergency operation			
(11)	95B 809 857 C	Module		1	IDD7/D1V/D50
					ID51
		Fuel filler flap			
		with			
		Actuator			
		Emergency operation			
(11)	95B 809 857 E	Module		1	IDD7/D1V/D50
					ID51
		Fuel filler flap			
		with			
		Actuator			
		Emergency operation			
12	95B 809 909	Fuel filler flap		1	
		Prime coated			
13	8T0 809 937 A	Hose		1	
20	8K0 819 161 C	Frame		2	
		Bleeding			
25	95B 813 541 Y	Support	/L	1	
		Bumper			
	95B 813 541 Y GRV	Prime coated			
(25)	95B 813 542 Y	Support	/R	1	
		Bumper			
	95B 813 542 Y GRV	Prime coated			
26	95B 853 225	Protective film	/L	1	
		Side section			
		Rear			
(26)	95B 853 226	Protective film	/R	1	
		Side section			
		Rear			
30	999 080 073 01	Clinch pin	/L /R	6	
		M 6 X 20			
		Mount			
		Support			

Model: 95B **Model life 2014>>**

Pos	Part Number	Description	Remark	Qty	Model
-	000 043 305 51	Bumper Cavity preservation 400 ML		X	

Illustration: 801-70

PORSCHE

Model: 95B **Model life 2014>>**

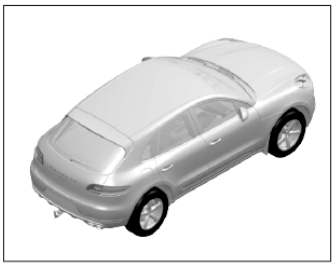

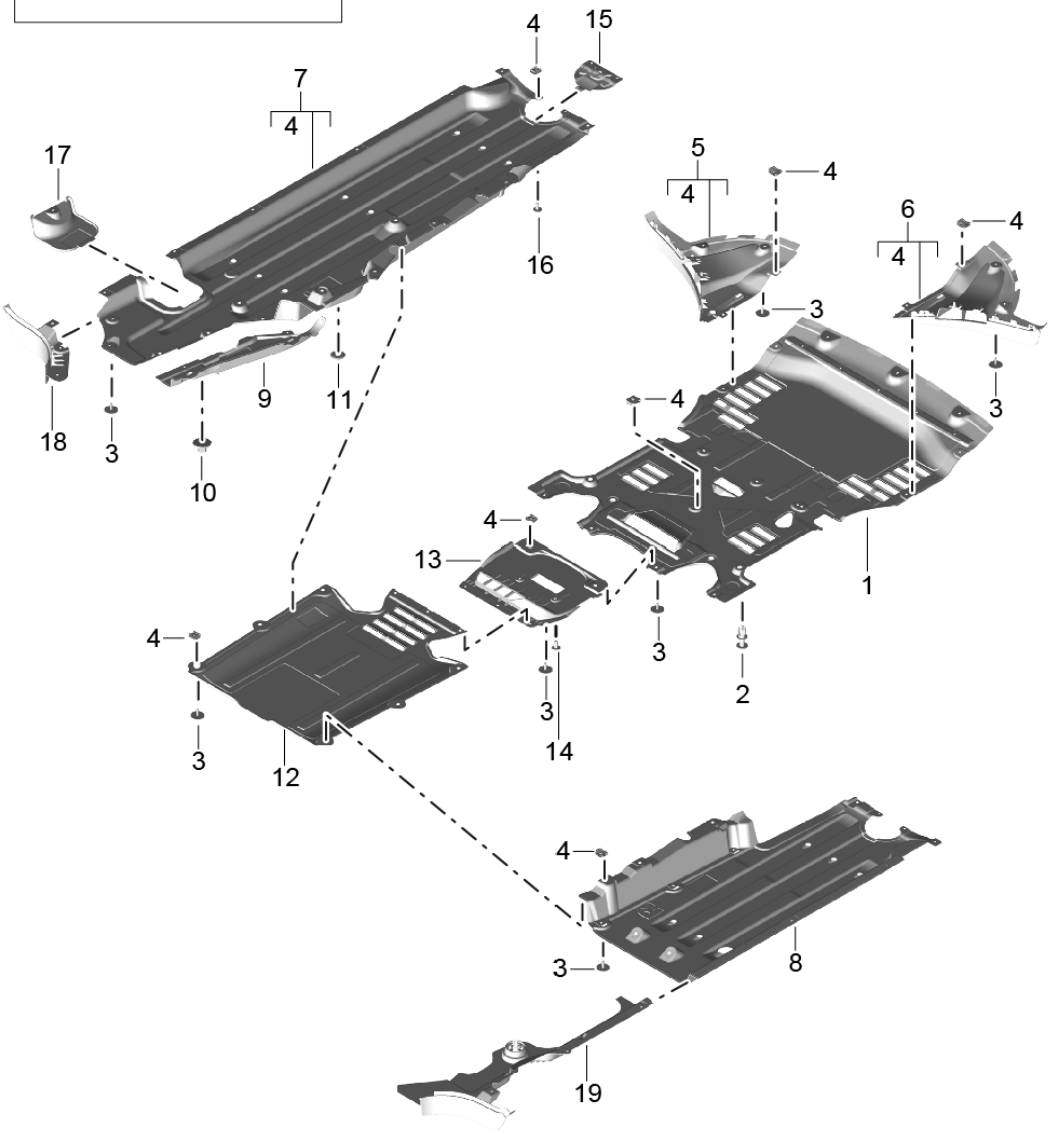

Model: 95B **Model life 2014>>**

Pos	Part Number	Description	Remark	Qty	Model
		Lining Underbody			
1	95B 863 821	Lining Front		1	IDD7/DM0/D1V ID43/D51
(1)	95B 863 821 A	Lining Front		1	IDU0/DU1
(1)	95B 863 821 B	Lining Front		1	IDU0/DU1
2	8K0 863 788	Expansion rivet		2	
3	999 073 491 01	Tapping screw 4,8 X 18		X	
4	999 507 795 09	Speed nut 4,8		X	
5	95B 825 101 A	Lining Front	/L	1	-I2JU/IDD7 IDM0/DU0/D1V ID43/D51
	95B 825 101 A 1E0	Black			
(5)	95B 825 101 D	Lining Front	/L	1	IDD7/DM0/DU0 ID1V/D43/D51 I2JU
	95B 825 101 D 1E0	Black			
(5)	95B 825 101 B	Lining Front	/L	1	IDU1
	95B 825 101 B 1E0	Black			
6	95B 825 102 A	Lining Front	/R	1	-I2JU/IDD7 IDM0/DU0/D1V ID43/D51
	95B 825 102 A 1E0	Black			
(6)	95B 825 102 D	Lining Front	/R	1	IDD7/DM0/DU0 ID1V/D43/D51 I2JU
	95B 825 102 D 1E0	Black			
(6)	95B 825 102 B	Lining Front	/R	1	IDU1
	95B 825 102 B 1E0	Black			
7	95B 825 205 A	Lining Centre	/L	1	
8	95B 825 206 A	Lining Centre	/R	1	-I5C1/-I5C6
(8)	95B 825 206 D	Lining Centre	/R	1	
9	95B 825 215	Lining Centre	/L	1	I1E9
10	N 907 579 01	Nut 5,0		2	I1E9
11	N 907 088 02	Speed nut 5,0		X	
12	95B 825 209 A	Lining Centre		1	IDU0/DU1
(12)	95B 825 209 D	Lining Centre		1	I2JU
13	95B 825 370 A	Lining Centre Appendix		1	IDU0/DU1
(13)	95B 825 370 D	Lining Centre Appendix		1	I2JU
14	N 904 388 05	Hexagon-head bolt		2	ITQ9/T8I

Model: 95B **Model life 2014>>**

Pos	Part Number	Description	Remark	Qty	Model
		5 X 15			
15	95B 825 271	Cover Lid Front		2	
16	N 909 855 01	Oval-head screw 5 X 12		4	
17	95B 825 353	Cover Lid Rear	/L	1	
18	95B 825 213 A	Lining Rear	/L	1	
	95B 825 213 A 1E0	Black			
19	95B 825 282 B	Lining Rear	/R	1	
	95B 825 282 B 1E0	Black			

Illustration: 801-72

PORSCHE

Model: 95B **Model life 2014>>**

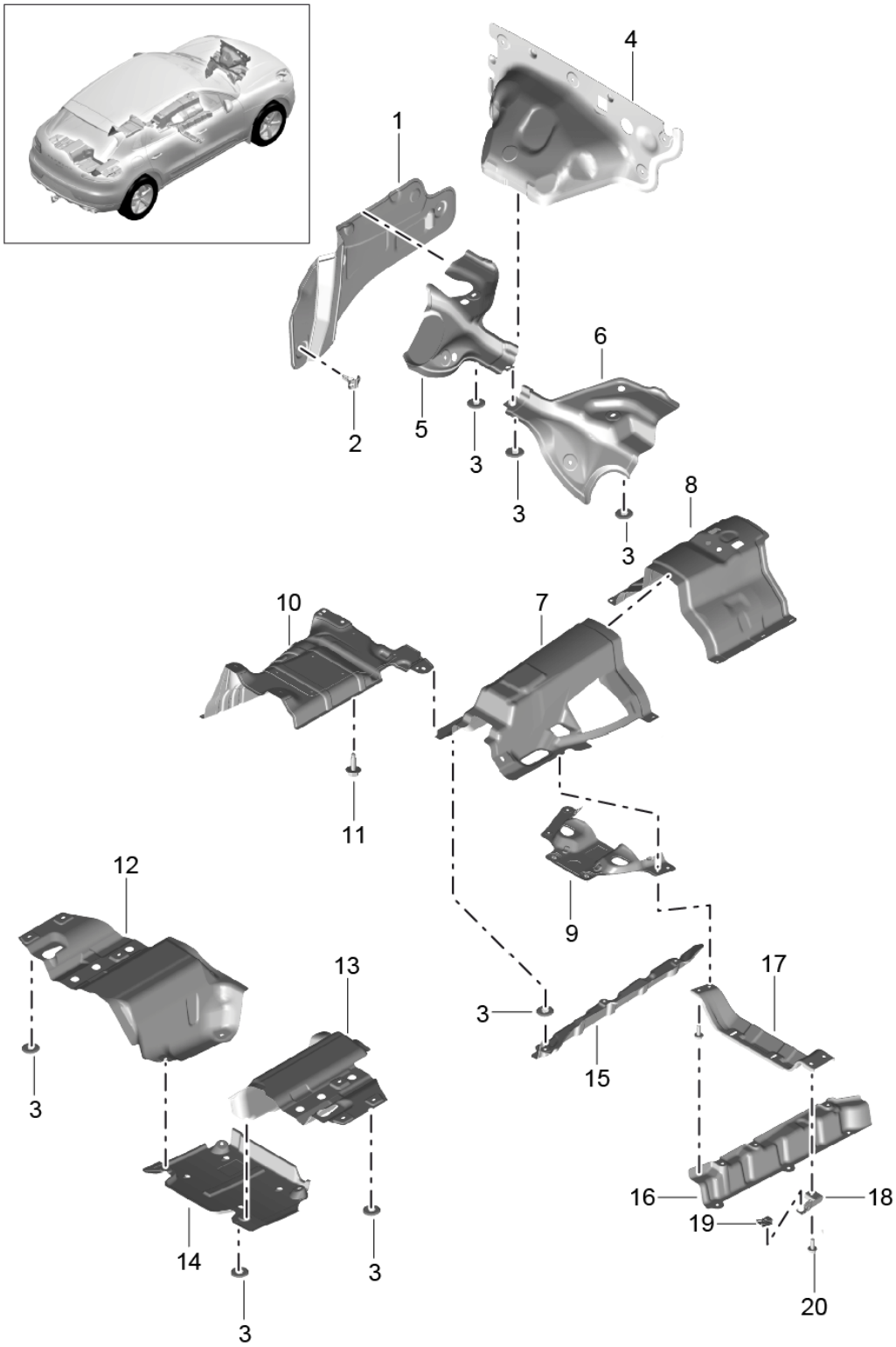

Model: 95B **Model life 2014>>**

Pos	Part Number	Description	Remark	Qty	Model
		Lining Underbody Heat protection			
1	95B 804 161	Heat protection	/L	1	IDD7/DU0/DU1 ID43/D51
		Side member			
(1)	95B 804 162	Heat protection Side member	/R	1	
2	8K0 863 203	Clip		X	
3	N 907 088 02	Speed nut 5,0		X	
4	95B 804 165	Heat protection		1	IDD7/D1V/D43 ID51
		Firewall Upper			
5	8R1 804 163 A	Heat protection Firewall Lower	/L	1	IL0L
(5)	8R2 804 163 A	Heat protection Firewall Lower	/L	1	IL0R
6	8R1 804 164	Heat protection Firewall Lower	/R	1	IL0L
(6)	8R2 804 164	Heat protection Firewall Lower	/R	1	IL0R
7	95B 804 160	Heat protection Tunnel Centre		1	
8	8K0 804 160 P	Heat protection Tunnel Front		1	
9	95B 521 443	Heat protection Tunnel Rear		1	
10	95B 804 173 D	Heat protection Central muffler		1	I1E0
(10)	95B 804 173 E	Heat protection Central muffler		1	I1E1
11	N 019 530 7	Hexagon-head bolt M8X25		2	
12	8R0 804 171 B	Heat protection Rear muffler	/L	1	
13	8R0 804 172 D	Heat protection Rear muffler	/R	1	
14	95B 825 216	Lining Battery box		1	
15	95B 825 757 A	Heat protection Tunnel	/L	1	
16	95B 825 758 A	Heat protection Tunnel	/R	1	IDU0/DU1
17	8R0 825 001 C	Stone guard Tunnel		1	
18	95B 825 352 B	Support Door sill	/R	1	
19	999 507 795 09	Speed nut Support		1	
20	N 911 456 01	Combination screw M8X28		4	
21	95B 803 979	Heat protection Tunnel		1	IG1D

Illustration: 801-75

PORSCHE

Model: 95B **Model life 2014>>**

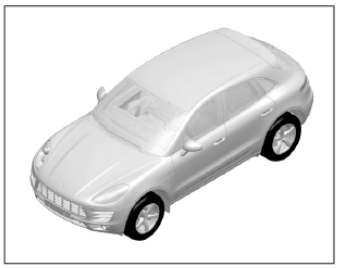

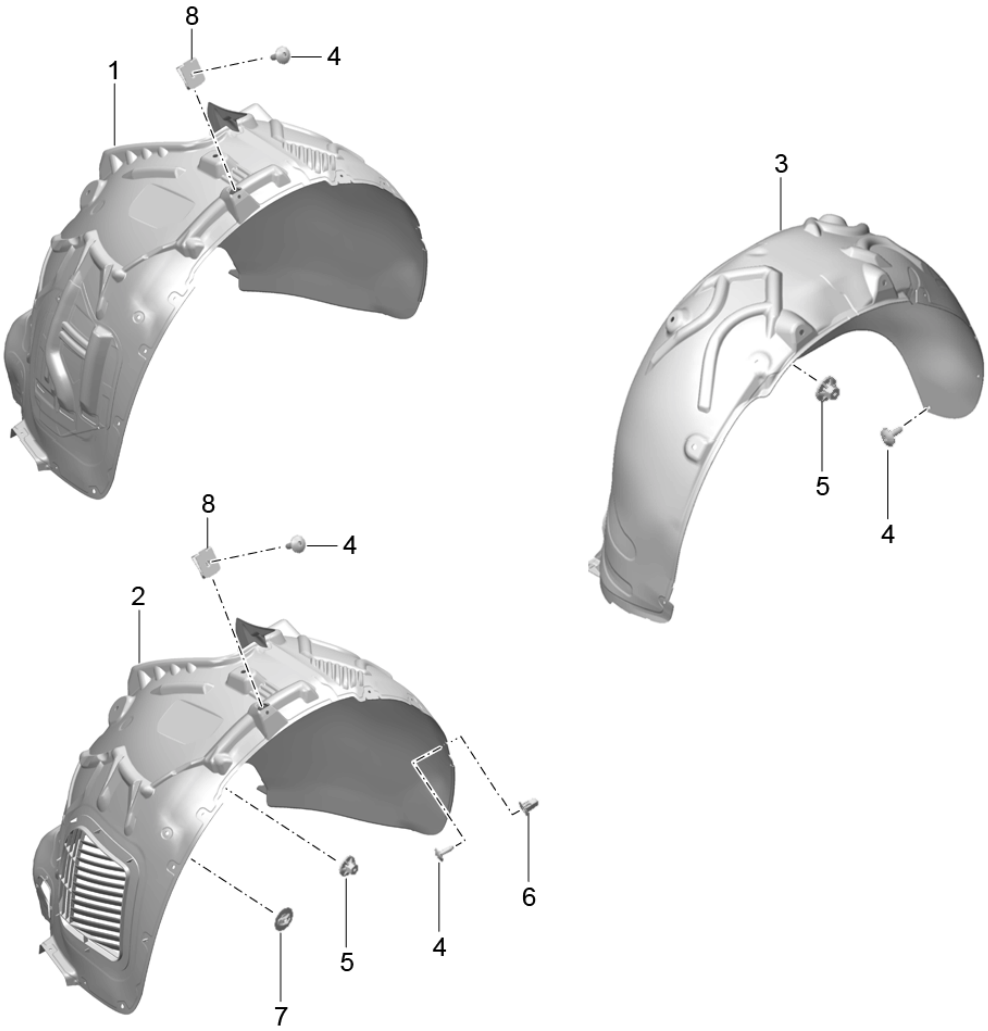

Model: 95B **Model life 2014>>**

Pos	Part Number	Description	Remark	Qty	Model
		Lining Wheel housing			
1	95B 809 961 D	Wheel-housing liner Front	/L	1	IDD7/DM0/D43 ID51
(1)	95B 809 962 D	Wheel-housing liner Front	/R	1	IDD7/DM0/D43 ID51
2	95B 809 961 E	Wheel-housing liner Front	/L	1	IDU0/DU1
(2)	95B 809 962 E	Wheel-housing liner Front	/R	1	IDU0/DU1
3	95B 810 971 E	Wheel-housing liner Rear	/L	1	
(3)	95B 810 972 E	Wheel-housing liner Rear	/R	1	
4	N 909 747 01	Oval-head sheetmetal screw TP5X16-Q		X	
5	N 907 579 01	Nut T 5 22 X 11		X	
6	WHT 004 935	Expander nut TP5X15.5 POS1 POS2		X	
7	3D0 863 907	Clip POS1 POS2		2	
8	999 507 795 09	Speed nut ST4,8		2	

Illustration: 802-00

PORSCHE

Model: 95B **Model life 2014>>**

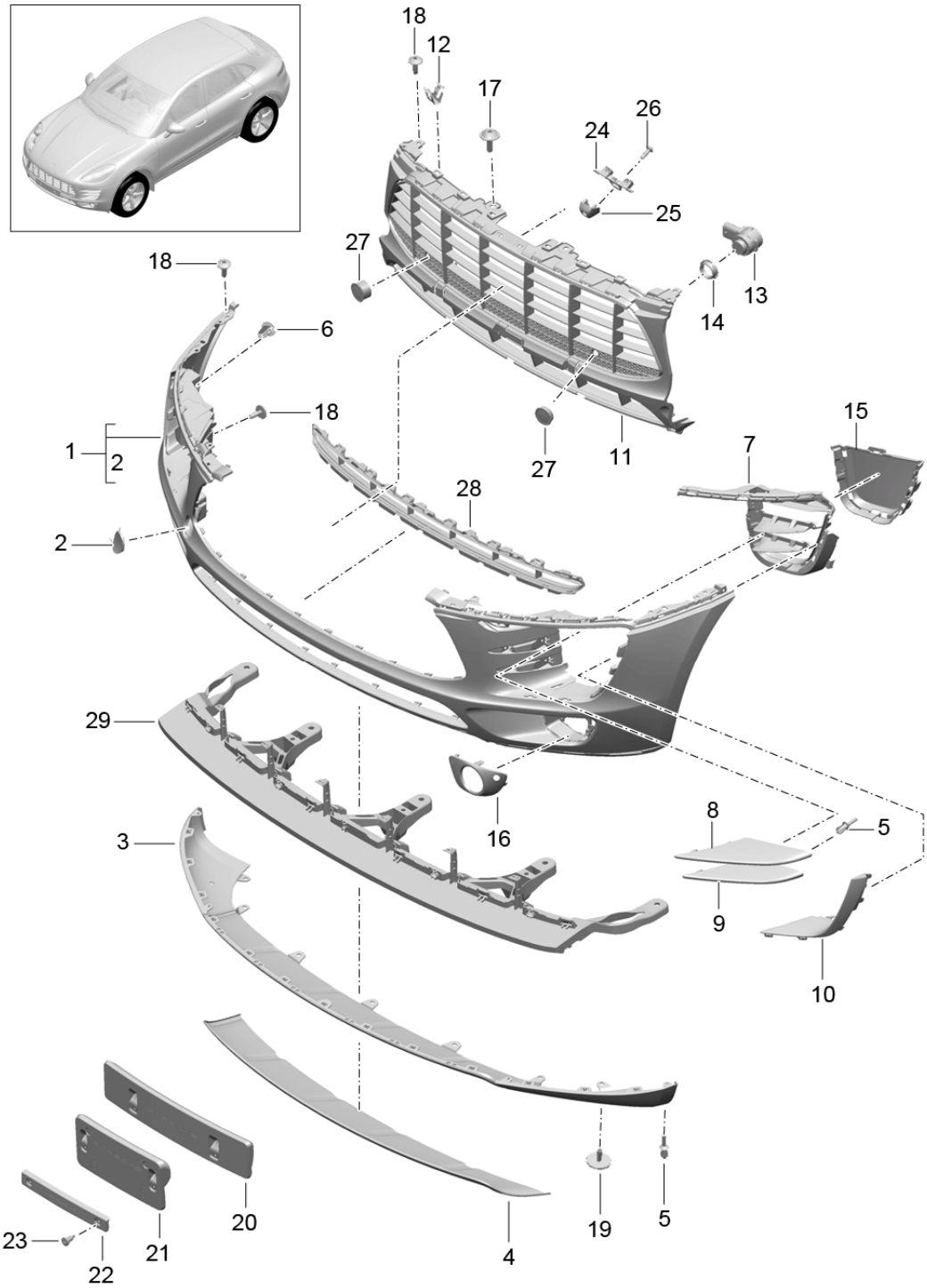

Model: 95B **Model life 2014>>**

Pos	Part Number	Description	Remark	Qty	Model
		Bumper			IDD7/DM0/DQ5 IDU0/D1V/D43 ID50/D51
		Front			-I2D1/-I2D2 -I2D5/-I2D6
		Basic			
1	95B 807 221 A	Lining		1	I6W1/6W2/6W4 I6W7
		Front			
	95B 807 221 A G2X	Prime coated			
1	95B 807 221 A	Lining		1	I2D0/2D7/8F2
		Front			
	95B 807 221 A G2X	Prime coated			
2	95B 807 156	Cap		1	
	95B 807 156 G2X	Prime coated			
3	95B 807 061	Front spoiler		1	I2D0/2D7/2JB
	95B 807 061 1E0	Black			
3	95B 807 061 A	Front spoiler		1	I2D0/2D7/2JC I2JX
		for			
		Cover			
		Stainless steel			
	95B 807 061 A 1E0	Black			
3	95B 807 061 F	Front spoiler	16-	1	I2D0/2D7/2JU
		ON-ROAD			
	95B 807 061 F 1E0	Black			
4	95B 807 833	Cover		1	I2JC/2JX
		Stainless steel			
	95B 807 833 6M7	Stainless steel			
5	N 038 501 3	Expansion rivet		16	
		A6,0X12,0			
6	WHT 004 935	Expander nut		4	
		TP5X15.5			
7	95B 807 681	Grille	/L	1	
		Closed			
	95B 807 681 1E0	Black			
(7)	95B 807 682	Grille	/R	1	
		Closed			
	95B 807 682 1E0	Black			
8	95B 807 685	Disc	/L	1	
		Upper left			
	95B 807 685 1E0	Black			
(8)	95B 807 686	Disc	/R	1	
		Upper right			
	95B 807 686 1E0	Black			
9	95B 807 877	Disc	/L	1	
		Lower			
		Left			
	95B 807 877 1E0	Black			
(9)	95B 807 878	Disc	/R	1	
		Lower			
		Right			
	95B 807 878 1E0	Black			
10	95B 807 819	Cover	/L	1	
	95B 807 819 1E0	Black			
(10)	95B 807 820	Cover	/R	1	
	95B 807 820 1E0	Black			
11	95B 807 683 H	Grille		1	I7X2/7X8/8T0 I8T1/8T6
		Centre			
	95B 807 683 H 1E0	Black			
(11)	95B 807 683 J	Grille		1	I7X2/7X8/8T3
		Centre			

Model: 95B **Model life 2014>>**

Pos	Part Number	Description	Remark	Qty	Model
		with ACC			
	95B 807 683 J 1E0	Black			
11	95B 807 683 K	Grille Centre with Camera		1	I8A4/8T0/8T1 I8T6
	95B 807 683 K 1E0	Black			
11	95B 807 683 L	Grille Centre ACC And Camera		1	I8A4/8T3
	95B 807 683 L 1E0	Black			
(11)	95B 807 683 R	Grille Centre without ParkAssist		1	I7X0/7X9/8T0 I8T1/8T6
	95B 807 683 R 1E0	Black			
(11)	95B 807 683 S	Grille Centre without ParkAssist with ACC		1	I7X0/7X9/8T3
	95B 807 683 S 1E0	Black			
12	999 507 836 09	Clamp 9,0X13,0/4,0		6	
13	5Q0 919 275	Sensor ParkAssist		4	I7X2/7X8/8A4
	5Q0 919 275 G2X	Prime coated			
14	5Q0 919 133	Gasket Sensor		4	I7X2/7X8/8A4
15	95B 121 333	Air duct Closed	/L	1	
	95B 121 333 1E0	Black			
(15)	95B 121 334	Air duct Closed	/R	1	
	95B 121 334 1E0	Black			
16	95B 807 795	Cover Fog headlamp	/L	1	I7X0
	95B 807 795 1E0	Black			
(16)	95B 807 796	Cover Fog headlamp	/R	1	I7X0
	95B 807 796 1E0	Black			
(16)	95B 807 795 B	Cover Fog headlamp with PDC	/L	1	I7X2/7X8
	95B 807 795 B 1E0	Black			
(16)	95B 807 796 B	Cover Fog headlamp with PDC	/R	1	I7X2/7X8
	95B 807 796 B 1E0	Black			
17	N 911 883 01	Outer hexagon round screw M6X20		2	
18	N 909 747 01	Oval-head sheetmetal screw TP5X16-Q		10	
19	999 073 491 01	Tapping screw ST4,8X18-C		2	

Model: 95B **Model life 2014>>**

Pos	Part Number	Description	Remark	Qty	Model
20	95B 807 287	Bracket Number plate		1	I6W1
	95B 807 287 1E0	Black			
21	95B 807 287 C	Bracket Number plate		1	I6W4
	95B 807 287 C 1E0	Black			
22	95B 807 287 B	Bracket Number plate		1	I6W2
	95B 807 287 B 1E0	Black			
(22)	95B 807 287 D	Bracket Number plate		1	I6W7
	95B 807 287 D 1E0	Black			
23	999 919 243 01	Screw Number plate 5,0X13,0		X	I6W2/6W3/6W4 I6W7
24	95B 807 692	Support Camera		1	I8A4
25	95B 807 725	Cover Camera		1	I8A4
	95B 807 725 1E0	Black			
26	N 104 159 03	Oval-head screw 4,0X12,0-Q		2	I8A4
27	95B 807 763	Cover without ParkAssist in Grille		2	I8A4
	95B 807 763 1E0	Black			
28	95B 805 935	Grille Front spoiler		1	I2JU
	95B 805 935 1E0	Black			
29	95B 805 842	Cross member		1	I2JU
	95B 805 842 1E0	Black			

Illustration: 802-01

PORSCHE

Model: 95B **Model life 2014>>**

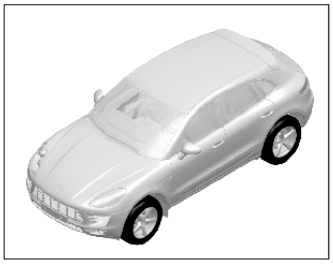

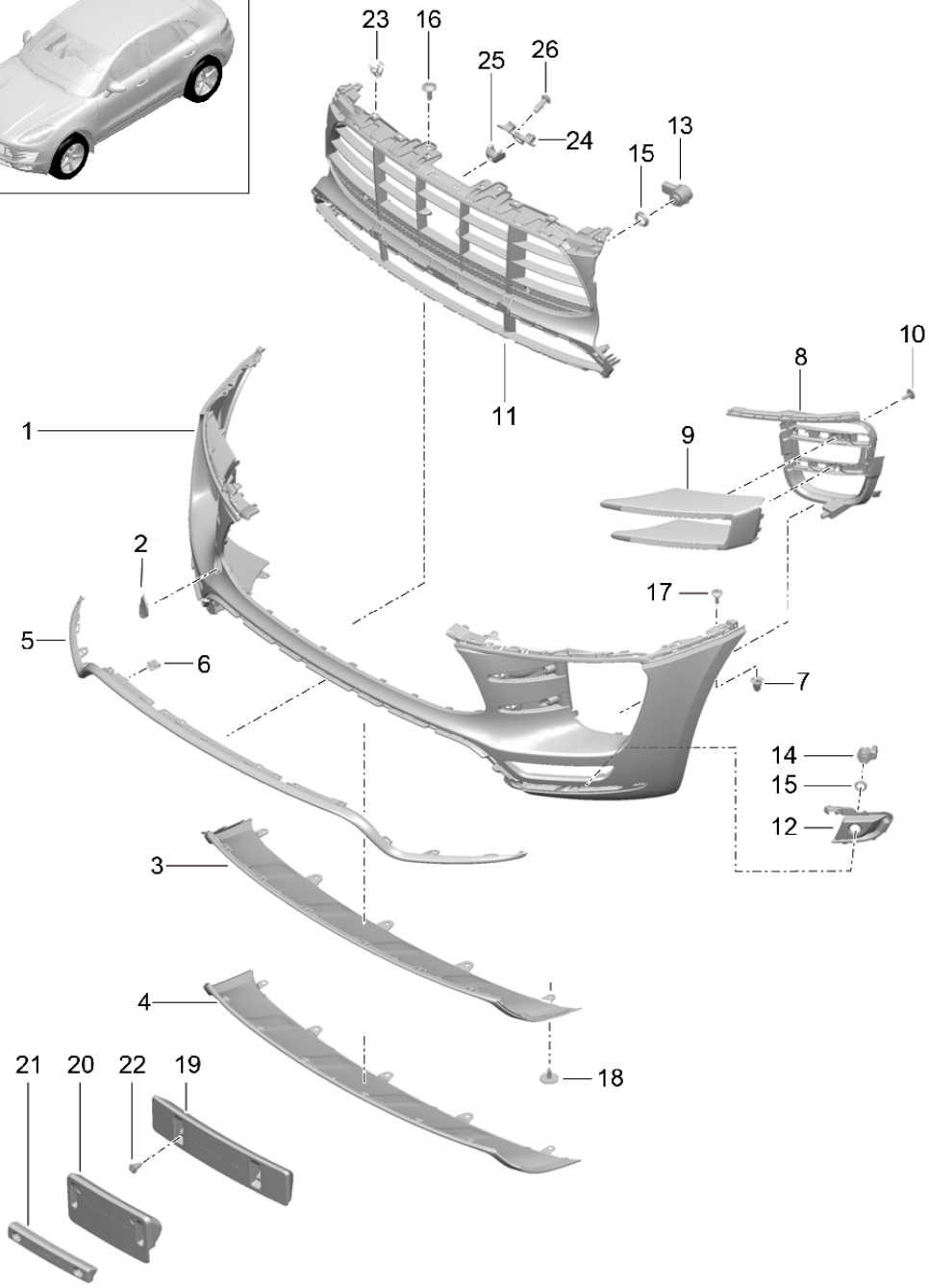

Model: 95B **Model life 2014>>**

Pos	Part Number	Description	Remark	Qty	Model
		Bumper			-I2D1/-I2D2 -I2D5/-I2D6 IDU1
		Front Turbo			
1	95B 807 221 E	Lining		1	I2D0/2D7/8F2
		Front			
	95B 807 221 E G2X	Prime coated			
2	95B 807 156 A	Cap		1	
	95B 807 156 A G2X	Prime coated			
3	95B 807 061 B	Front spoiler		1	I2JB
	95B 807 061 B 1E0	Black			
(3)	95B 807 061 C	Front spoiler for Cover Stainless steel		1	I2JC/2JX
	95B 807 061 C 1E0	Black			
4	95B 807 833 A	Cover Stainless steel		1	I2JC/2JX
	95B 807 833 A 6M7	Stainless steel			
5	95B 807 110	Spoiler lip		1	
	95B 807 110 1E0	Black			
6	N 905 319 02	U-clamp 3,00-4,00		4	
7	WHT 004 935	Expander nut TP5X15.5		4	
8	95B 807 681 A	Grille	/L	1	
	95B 807 681 A 1E0	Black			
(8)	95B 807 682 A	Grille	/R	1	
	95B 807 682 A 1E0	Black			
9	95B 807 823	Cover	/L	1	
	95B 807 823 1E0	Black			
(9)	95B 807 824	Cover	/R	1	
	95B 807 824 1E0	Black			
10	N 909 747 01	Oval-head sheetmetal screw TP5X16-Q		4	
11	95B 807 683 AA	Grille Centre with ParkAssist		1	I7X2/7X8/8T1 I8T6
	95B 807 683 AA 1E0	Black			
(11)	95B 807 683 AB	Grille Centre with ParkAssist ACC		1	I7X2/7X8/8T3
	95B 807 683 AB 1E0	Black			
(11)	95B 807 683 AC	Grille Centre with ParkAssist RTV		1	I8A4/8T1/8T6
	95B 807 683 AC 1E0	Black			
(11)	95B 807 683 AD	Grille Centre with ParkAssist RTV ACC		1	I8A4/8T3
	95B 807 683 AD 1E0	Black			
(11)	95B 807 683 AE	Grille		1	I7X0/7X9/8T1 I8T6

Model: 95B **Model life 2014>>**

Pos	Part Number	Description	Remark	Qty	Model
		Centre without ParkAssist			
	95B 807 683 AE 1E0	Black			
(11)	95B 807 683 AF	Grille Centre without ParkAssist with ACC		1	I7X0/7X9/8T3
	95B 807 683 AF 1E0	Black			
12	95B 807 795 A	Cover Fog headlamp	/L	1	I7X0
	95B 807 795 A 1E0	Black			
(12)	95B 807 796 A	Cover Fog headlamp	/R	1	I7X0
	95B 807 796 A 1E0	Black			
(12)	95B 807 795 C	Cover Fog headlamp with PDC	/L	1	I7X2/7X8
	95B 807 795 C 1E0	Black			
(12)	95B 807 796 C	Cover Fog headlamp with PDC	/R	1	I7X2/7X8
	95B 807 796 C 1E0	Black			
13	5Q0 919 275	Sensor Grille Inner ParkAssist		2	I7X2/7X8/8A4
	5Q0 919 275 G2X	Prime coated			
14	5Q0 919 275 A	Sensor Outer ParkAssist Information available		2	I7X2/7X8/8A4
15	5Q0 919 133	Gasket Sensor		4	I7X2/7X8/8A4
16	N 911 883 01	Outer hexagon round screw M6X20		2	
17	N 909 747 01	Oval-head sheetmetal screw TP5X16-Q		10	
18	999 073 491 01	Tapping screw ST4,8X18-C		7	
19	95B 807 287 E	Bracket Number plate		1	I6W1
	95B 807 287 E 1E0	Black			
20	95B 807 287 H	Bracket Number plate		1	I6W4
	95B 807 287 H 1E0	Black			
21	95B 807 287 G	Bracket Number plate		1	I6W2
	95B 807 287 G 1E0	Black			
(21)	95B 807 287 J	Bracket Number plate		1	I6W7
	95B 807 287 J 1E0	Black			
22	999 919 243 01	Screw Number plate 5,0X13,0		X	I6W2/6W3/6W4 I6W7
23	999 507 836 09	Clamp 9,0X13,0/4,0		6	
24	95B 807 692	Support		1	I8A4

Model: 95B **Model life 2014>>**

Pos	Part Number	Description	Remark	Qty	Model
		Camera			
25	95B 807 725	Cover		1	I8A4
		Camera			
	95B 807 725 1E0	Black			
26	N 104 159 03	Oval-head screw		2	I8A4
		4,0X12,0-Q			

Illustration: 802-02

PORSCHE

Model: 95B **Model life 2014>>**

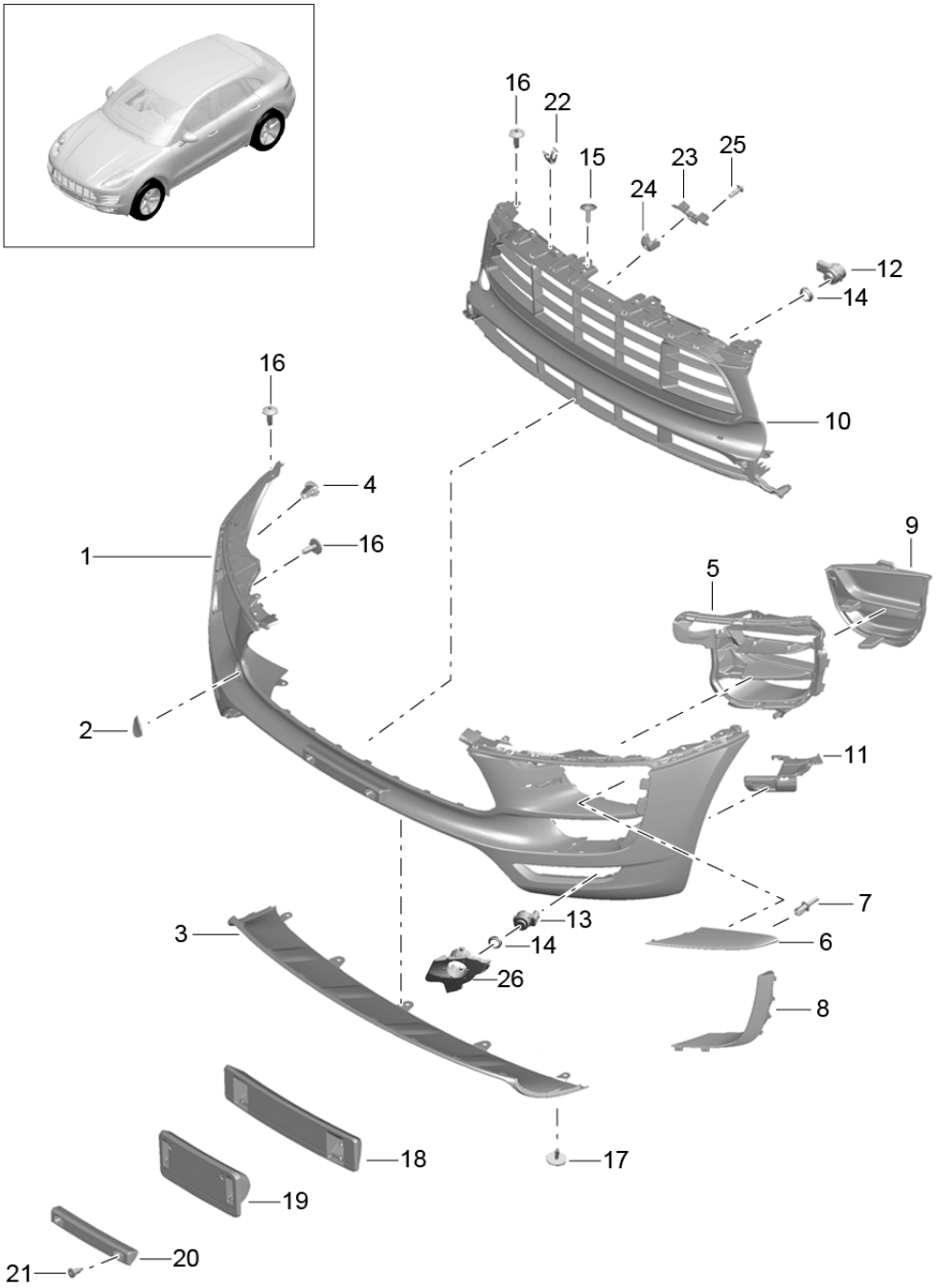

Model: 95B **Model life 2014>>**

Pos	Part Number	Description	Remark	Qty	Model
		Bumper			I2D1/2D2/2D5
					I2D6
		Front			
		GTS			
		And			
		Sport Design package			
1	95B 807 221 H	Lining		1	I8F2
		Front			
	95B 807 221 H G2X	Prime coated			
2	95B 807 156 B	Cap		1	
	95B 807 156 B G2X	Prime coated			
3	95B 807 061 D	Front spoiler		1	
	95B 807 061 D G2X	Prime coated			
4	WHT 004 935	Expander nut		4	
		TP5X15.5			
5	95B 807 681 B	Grille	/L	1	
		Closed			
	95B 807 681 B OK1	Black mat			
	95B 807 681 B G2X	Prime coated			
(5)	95B 807 682 B	Grille	/R	1	
		Closed			
	95B 807 682 B OK1	Black mat			
	95B 807 682 B G2X	Prime coated			
6	95B 807 685 A	Disc	/L	1	
		Upper left			
	95B 807 685 A OK1	Black mat			
	95B 807 685 A G2X	Prime coated			
(6)	95B 807 686 A	Disc	/R	1	
		Upper right			
	95B 807 686 A OK1	Black mat			
	95B 807 686 A G2X	Prime coated			
7	N 038 501 3	Expansion rivet		6	
		A6,0X12,0			
8	95B 807 819 A	Cover	/L	1	
	95B 807 819 A OK1	Black mat			
	95B 807 819 A G2X	Prime coated			
(8)	95B 807 820 A	Cover	/R	1	
	95B 807 820 A OK1	Black mat			
	95B 807 820 A G2X	Prime coated			
9	95B 121 333 A	Air duct	/L	1	
		Closed			
	95B 121 333 A 1E0	Black			
(9)	95B 121 334 A	Air duct	/R	1	
		Closed			
	95B 121 334 A 1E0	Black			
10	95B 807 683 AL	Grille		1	I2D5/2D6/7X0
					I7X9/8T0/8T1
					I8T6
		Centre			
	95B 807 683 AL G2X	Prime coated			
10	95B 807 683 AL	Grille		1	I2D5/2D6/7X0
					I7X9/8T0/8T1
					I8T6
		Centre			
	95B 807 683 AL OK1	Black mat			
(10)	95B 807 683 AH	Grille		1	I2D5/2D6/7X2
					I7X8/8T3
		Centre			
		with			
		ParkAssist			
		ACC			
	95B 807 683 AH G2X	Prime coated			
(10)	95B 807 683 AH	Grille		1	I2D1/2D2/7X2

Model: 95B **Model life 2014>>**

Pos	Part Number	Description	Remark	Qty	Model
					I7X8/8T3
		Centre with ParkAssist ACC			
	95B 807 683 AH OK1	Black mat			
(10)	95B 807 683 AJ	Grille		1	I2D5/2D6/8A4 I8T0/8T1/8T6
		Centre with ParkAssist RTV			
	95B 807 683 AJ G2X	Prime coated			
(10)	95B 807 683 AJ	Grille		1	I2D1/2D2/8A4 I8T0/8T1/8T6
		Centre with ParkAssist RTV			
	95B 807 683 AJ OK1	Black mat			
(10)	95B 807 683 AK	Grille		1	I2D5/2D6/8A4 I8T3
		Centre with ParkAssist RTV ACC			
	95B 807 683 AK G2X	Prime coated			
(10)	95B 807 683 AK	Grille		1	I2D1/2D2/8A4 I8T3
		Centre with ParkAssist RTV ACC			
	95B 807 683 AK OK1	Black mat			
(10)	95B 807 683 AG	Grille		1	I2D5/2D6/7X2 I7X8/8T0/8T1 I8T6
		Centre with ParkAssist			
	95B 807 683 AG G2X	Prime coated			
(10)	95B 807 683 AG	Grille		1	I2D1/2D2/7X2 I7X8/8T0/8T1 I8T6
		Centre with ParkAssist			
	95B 807 683 AG OK1	Black mat			
(10)	95B 807 683 AM	Grille		1	I2D5/2D6/7X0 I7X9/8T3
		Centre without ParkAssist with ACC			
	95B 807 683 AM G2X	Prime coated			
(10)	95B 807 683 AM	Grille		1	I2D1/2D2/7X0 I7X9/8T3
		Centre without ParkAssist			

Model: 95B **Model life 2014>>**

Pos	Part Number	Description	Remark	Qty	Model
		with ACC			
	95B 807 683 AM OK1	Black mat			
11	95B 807 795 D	Cover Fog headlamp	/L	1	I7X0/7X9
	95B 807 795 D OK1	Black mat			
	95B 807 795 D G2X	Prime coated			
(11)	95B 807 796 D	Cover Fog headlamp	/R	1	I7X0/7X9
	95B 807 796 D OK1	Black mat			
	95B 807 796 D G2X	Prime coated			
(11)	95B 807 795 E	Cover Fog headlamp with PDC	/L	1	I7X2/7X8/8A4
	95B 807 795 E OK1	Black mat			
	95B 807 795 E G2X	Prime coated			
(11)	95B 807 796 E	Cover Fog headlamp with PDC	/R	1	I7X2/7X8/8A4
	95B 807 796 E OK1	Black mat			
	95B 807 796 E G2X	Prime coated			
12	5Q0 919 275	Sensor Grille Inner ParkAssist		2	I7X2/7X8/8A4
	5Q0 919 275 G2X	Prime coated			
13	5Q0 919 275 A	Sensor Outer ParkAssist Information available		2	I7X2/7X8/8A4
14	5Q0 919 133	Gasket Sensor		4	I7X2/7X8/8A4
15	N 911 883 01	Outer hexagon round screw M6X20		2	
16	N 909 747 01	Oval-head sheetmetal screw TP5X16-Q		10	
17	999 073 491 01	Tapping screw ST4,8X18-C		7	
18	95B 807 287 K	Number plate Bracket		1	I6W1
	95B 807 287 K 1E0	Black			
19	95B 807 287 N	Number plate Bracket		1	I6W4
	95B 807 287 N 1E0	Black			
20	95B 807 287 M	Number plate Bracket		1	I6W2
	95B 807 287 M 1E0	Black			
(20)	95B 807 287 P	Number plate Bracket		1	I6W7
	95B 807 287 P 1E0	Black			
21	999 919 243 01	Screw Number plate 5,0X13,0		X	I6W2/6W3/6W4 I6W7
22	999 507 836 09	Clamp 9,0X13,0/4,0		6	
23	95B 807 692	Support Camera		1	I8A4
24	95B 807 725 A	Cover Camera		1	I8A4
	95B 807 725 A OK1	Black mat			

Model: 95B **Model life 2014>>**

Pos	Part Number	Description	Remark	Qty	Model
	95B 807 725 A G2X	Prime coated			
25	N 104 159 03	Oval-head screw 4,0X12,0-Q		2	I8A4
26	95B 807 129 A	Support Sensor Inner	/L	1	
(26)	95B 807 130 A	Support Sensor Inner	/R	1	

Illustration: 802-07

PORSCHE

Model: 95B **Model life 2014>>**

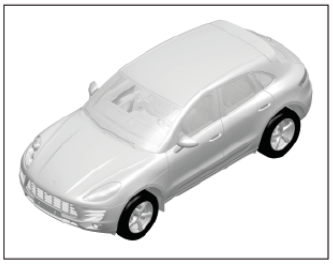

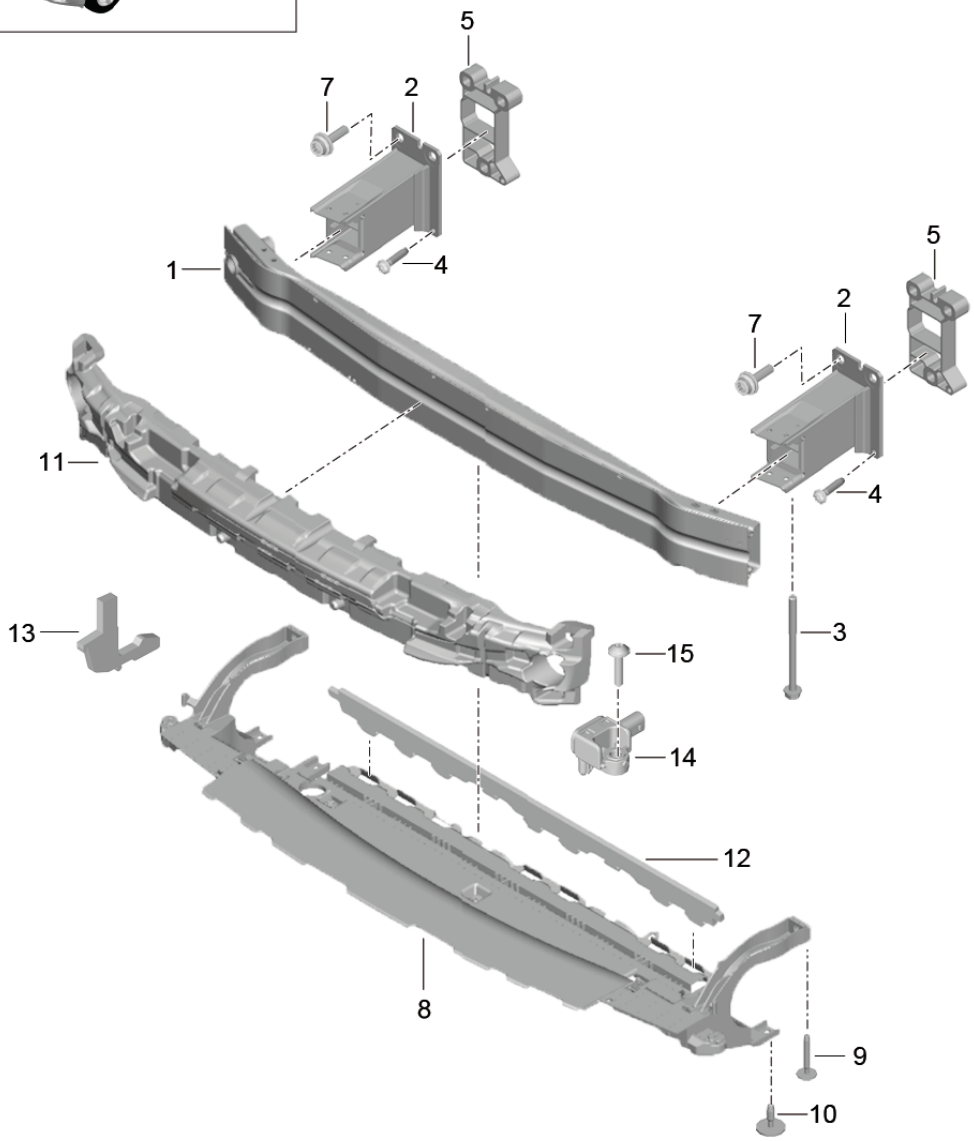

Model: 95B **Model life 2014>>**

Pos	Part Number	Description	Remark	Qty	Model
		Bumper reinforcement Front			
1	8R0 807 113 D	Bracket Bumper		1	
2	8R0 807 133 A	Support Bumper reinforcement	/L	1	
(2)	8R0 807 134 D	Support Bumper reinforcement	/R	1	
3	N 100 362 03	Combination screw M8X105X41		4	
4	N 105 539 03	Oval-head screw 6,0X30,0-Q		2	IB0A/B0E/B0L IB0M/B0N/B0R IB1C/B1D/B1P IB2A IB2G/B2H
7	N 911 530 01	Combination screw M10X35-ITR		6	IB0A/B0L/B0M IB0N/B0R/B1C IB1D/B1P/B2A IB2G IB2H
8	95B 805 241	Cross member Pedestrian protection		1	IDD7/DE5/DM0 IDU0/D43
(8)	95B 805 241 B	Cross member Pedestrian protection		1	IDU1
9	WHT 007 484	Combination screw 6,0X40,0		2	
10	N 911 182 01	Combination screw 6,0X20-R-L		4	
11	95B 807 550 G	Plastic foam strip		1	IB0A/B0E/B0L IB0M/B0N/B0R IB1C/B1D/B1P IB2A IB2G/B2H/B3D IDD7/DM0/DU0 ID1V/D43/D50 ID51
(11)	95B 807 550 F	Plastic foam strip		1	IB0A/B0E/B0L IB0M/B0N/B0R IB1C/B1D/B1P IB2A IB2G/B2H/B3D IDU1/2D0/2D1 I2D2/2D5/2D6 I2D7
(11)	95B 807 550 H	Plastic foam strip Sport Design package		1	IB0A/B0L/B0M IB0N/B0R/B1C IB1D/B1P/B2A IB2G IB2H/DU1/2D1 I2D2
-		Connecting line Antenna VTS vehicle tracking See illustrations 9/11/10		1	
12	95B 121 289	Sealing strip Centre		1	IDD7/DE5/DM0 ID1V/D43/D51
(12)	95B 121 289 A	Sealing strip Centre		1	IDU0/DU1
13	95B 121 675	Sealing strip Lateral		2	IDM0

Model: 95B **Model life 2014>>**

Pos	Part Number	Description	Remark	Qty	Model
(13)	95B 121 675 B	Sealing strip Lateral		2	IDD7/D1V/D43 ID51
(13)	95B 121 675 E	Sealing strip Lateral		2	IDU1
(13)		Sealing strip Lateral Sport Design package		2	IDU0/2D1/2D2 I2D5/2D6
(13)	95B 121 675 F	Sealing strip Lateral		2	IDU0
(13)	95B 121 675 H	Sealing strip Lateral Sport Design package		2	IDD7/DM0/D1V ID43/D50/D51 I2D1/2D2/2D5 I2D6
14	2H0 959 652	Front sensor		2	
15	N 106 321 02	Oval-head screw 6,0X20-R-L		2	

Illustration: 802-10

PORSCHE

Model: 95B **Model life 2014>>**

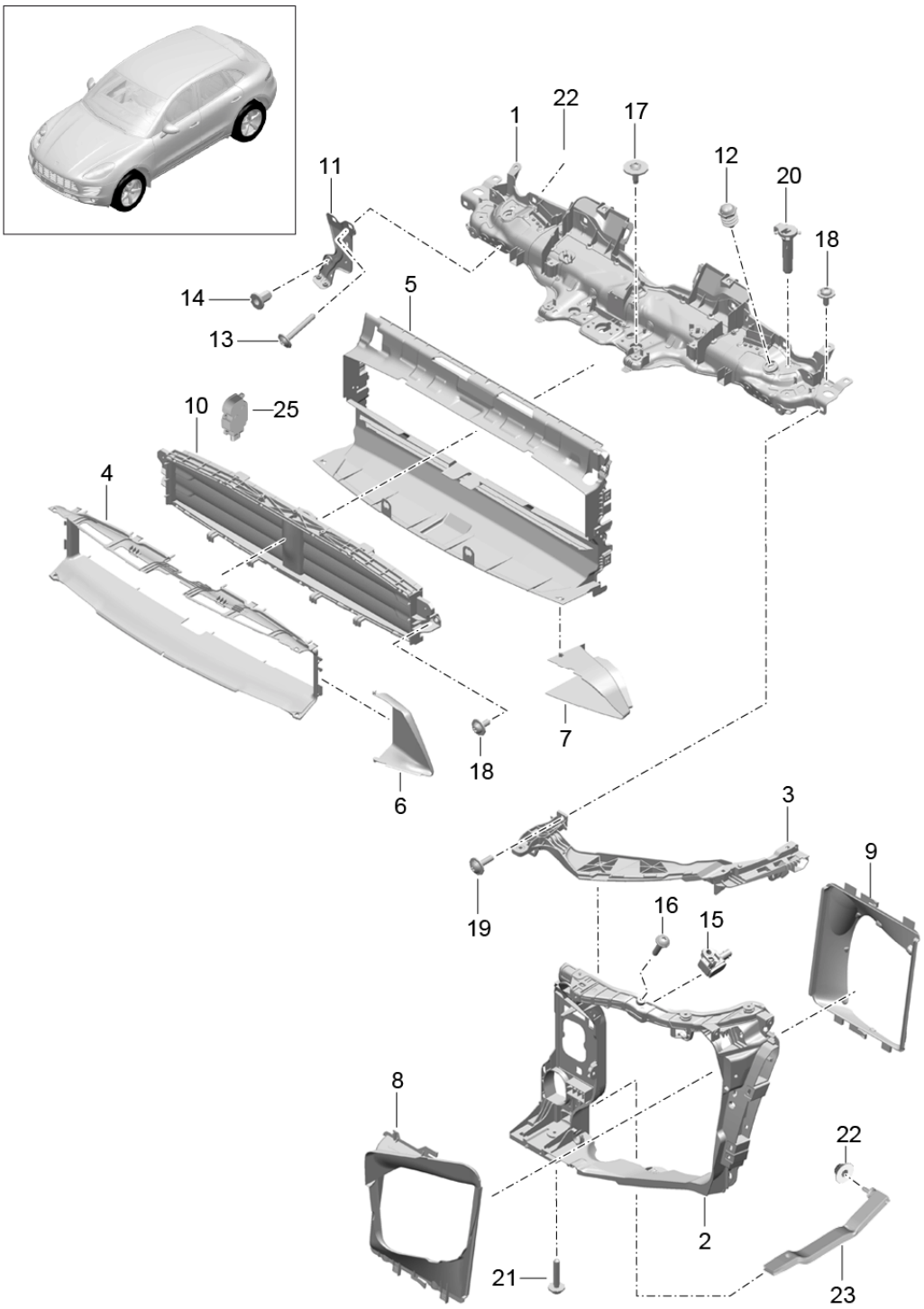

Model: 95B **Model life 2014>>**

Pos	Part Number	Description	Remark	Qty	Model
		Bracket Radiator Air duct And Lock carrier			
1	95B 805 931 F	Bracket		1	IDD7/DM0/D1V ID43/D51
(1)	95B 805 931 G	Basic Bracket		1	IDU0/DU1/D4A
-	95B 128 146 A	Top Gasket		1	
-	95B 129 146 A	Left Bracket Gasket		1	
2	95B 805 295	Right Bracket Bracket	/L	1	
2	95B 805 594	Charge air cooler Bracket	/R	1	
3	95B 807 889 A	Charge air cooler Guide piece	/L	1	
(3)	95B 807 890 A	Guide piece	/R	1	
4	95B 121 710	Air duct		1	I2D0/2D7/8T0 I8T1/8T6
		without ACC			
	95B 121 710 1E0	Black			
(4)	95B 121 710 B	Air duct		1	I2D1/2D2/2D5 I2D6/8T0/8T1 I8T6
		without ACC Sport Design package			
	95B 121 710 B 1E0	Black			
(4)	95B 121 710 A	Air duct		1	I2D0/2D7/8T3
		with ACC			
	95B 121 710 A 1E0	Black			
(4)	95B 121 710 C	Air duct		1	I2D1/2D2/2D5 I2D6/8T3
		with ACC Sport Design package			
	95B 121 710 C 1E0	Black			
5		Air duct Rear See group 1/05/80		1	
6	95B 121 673	Air duct Basic	/L	1	
	95B 121 673 1E0	Black			
(6)	95B 121 673 B	Air duct	/L	1	I2D1/2D2/2D5 I2D6
		Sport Design package			
	95B 121 673 B 1E0	Black			
(6)	95B 121 674	Air duct Basic	/R	1	
	95B 121 674 1E0	Black			
(6)	95B 121 674 B	Air duct	/R	1	I2D1/2D2/2D5 I2D6
		Sport Design package			
	95B 121 674 B 1E0	Black			
7	95B 121 699 F	Air duct	/L	1	IDD7/DE5/DM0

Model: 95B **Model life 2014>>**

Pos	Part Number	Description	Remark	Qty	Model
					IDU0/D1V/D43
					ID51
		Air flap			
	95B 121 699 F 1E0	Black			
(7)	95B 121 700 B	Air duct	/R	1	IDD7/DE5/DM0
					IDU0/D1V/D43
					ID51
		Air flap			
	95B 121 700 B 1E0	Black			
(7)	95B 121 699 C	Air duct	/L	1	IDU1/2D0/2D7
		Air flap			
	95B 121 699 C 1E0	Black			
(7)	95B 121 699 C	Air duct	/L	1	I2D1/2D2/2D5
					I2D6
		Air flap			
		Sport Design package			
	95B 121 699 C 1E0	Black			
(7)	95B 121 700 C	Air duct	/R	1	IDU1/2D0/2D7
		Air flap			
	95B 121 700 C 1E0	Black			
(7)	95B 121 700 C	Air duct	/R	1	I2D1/2D2/2D5
					I2D6
		Air flap			
		Sport Design package			
	95B 121 700 C 1E0	Black			
8	95B 117 335	Air duct	/L	1	IDU0
		Basic			
(8)	95B 117 336	Air duct	/R	1	IDU0
		Basic			
(8)	95B 117 335 A	Air duct	/L	1	IDU1/2D0/2D7
(8)	95B 117 336 A	Air duct	/R	1	IDU1
(8)	95B 117 335 B	Air duct	/L	1	IDU0/DU1/2D1
					I2D2/2D5/2D6
		Sport Design package			
(8)	95B 117 336 B	Air duct	/R	1	IDU0/DU1/2D1
					I2D2/2D5/2D6
		Sport Design package			
9	95B 117 339	Air duct	/L	1	IDU0/DU1
(9)	95B 117 340	Air duct	/R	1	IDU0/DU1
10	95B 121 257 Y	Vanes		1	IDD7/DM0/DU0
					IDU1/D1V/D43
					ID51
		Package			
11	95B 807 333	Support	/L	1	IDD7/DM0/D1V
					ID43/D51
(11)	95B 807 334	Support	/R	1	IDD7/DM0/D1V
					ID43/D51
12	955 511 500 00	Rubber buffer		2	
13	N 911 463 01	Round head screw		4	
		M6X42			
14	N 910 240 01	Blind rivet nut		1	
		M6/0,75-3,5			
15	2H0 959 652	Front sensor		2	
16	N 106 321 02	Oval-head screw		2	
		M6X25			
17	N 911 080 01	Combination screw		2	
		5,0X16,0-Q			
18	N 104 114 02	Outer hexagon round screw		X	
		M6X16-TC			
19	N 911 405 02	Combination screw		8	
		M6X22			
20	WHT 001 506 A	Bolt		2	
		19X46.2			

Model: 95B **Model life 2014>>**

Pos	Part Number	Description	Remark	Qty	Model
21	N 911 657 01	Combination screw M6X35-TC		2	
22	N 907 611 03	Nut M8		2	
23	95B 805 527	Strut	/L	1	
(23)	95B 805 528	Strut	/R	1	
25	95B 965 501 B	Electric motor Disc pack		1	
25	95B 965 501 H	Electric motor Disc pack		1	
26	95B 805 187	Air duct Upper ON-ROAD		1	I2JU
	95B 805 187 1E0	Black			
27	95B 805 647 A	Air duct Lower ON-ROAD		1	I2JU
	95B 805 647 A 1E0	Black			

Illustration: 802-20

PORSCHE

Model: 95B **Model life 2014>>**

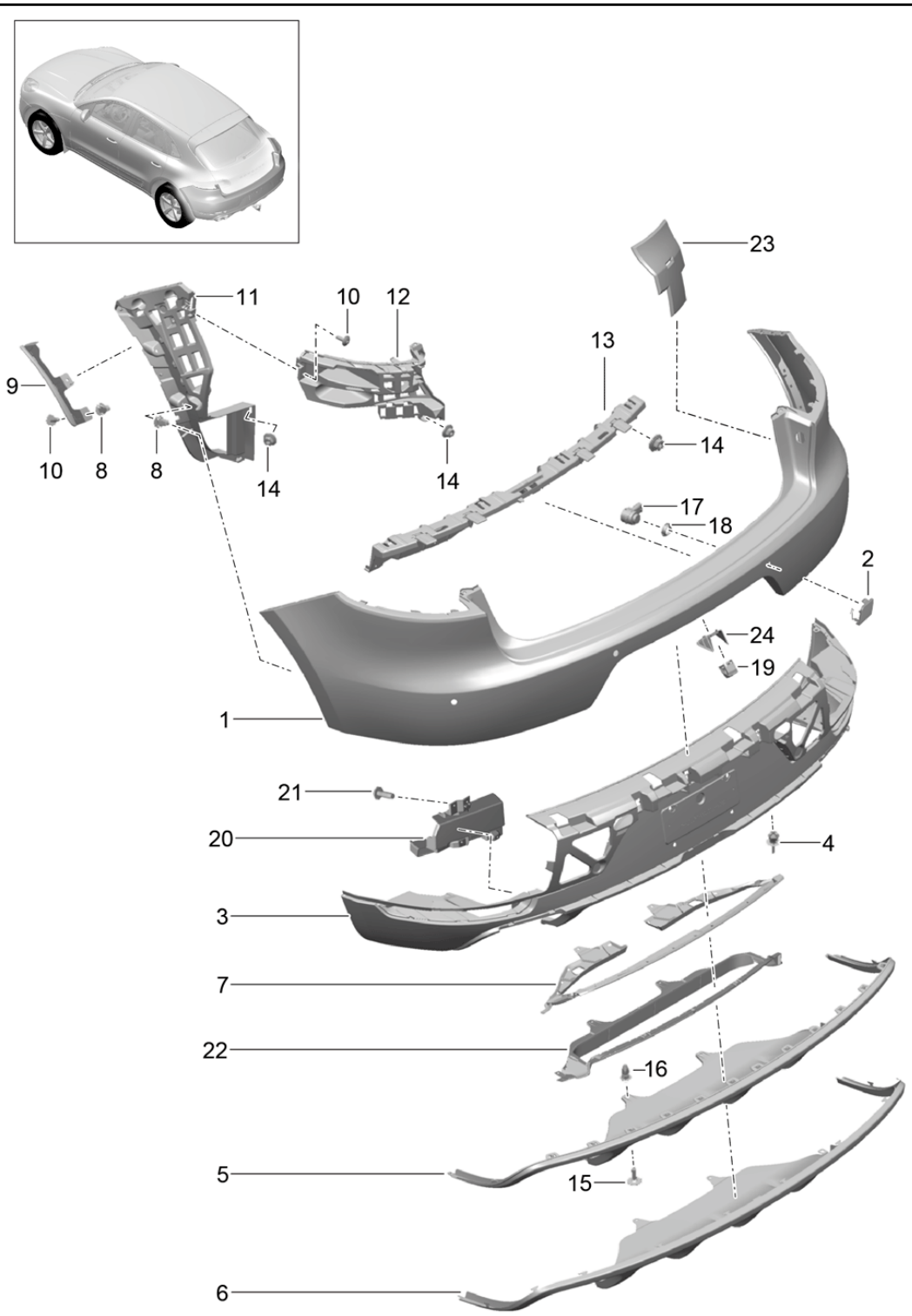

Model: 95B **Model life 2014>>**

Pos	Part Number	Description	Remark	Qty	Model
		Bumper			-I2D1/-I2D2 -I2D5/-I2D6
1	95B 807 421	Rear Lining Rear without ParkAssist And Reversing camera		1	I7X0
	95B 807 421 G2X	Prime coated			
(1)	95B 807 417 A	Lining Rear with ParkAssist without Reversing camera		1	I7X2
	95B 807 417 A G2X	Prime coated			
(1)	95B 807 421 C	Lining Rear with Reversing camera without ParkAssist		1	I7X9
	95B 807 421 C G2X	Prime coated			
(1)	95B 807 417 D	Lining Rear with ParkAssist And Reversing camera		1	I7X8/8A4
	95B 807 417 D G2X	Prime coated			
2	95B 807 500	Cap		1	
	95B 807 500 G2X	Prime coated			
3	95B 807 521 M	Spoiler Rear		1	IDD7/DM0/DU0 ID43/D51/2D0 I6W1/6W2/6W3
	95B 807 521 M 1E0	Black			
(3)	95B 807 521 B	Spoiler Rear Version for japan		1	IDD7/DM0/DU0 ID1V/D43/D50 I2D0/2D7/6W4
	95B 807 521 B 1E0	Black			
(3)	95B 807 521 R	Spoiler Rear Turbo Version for japan		1	IDU1/2D0/6W4
	95B 807 521 R G2X	Prime coated			
(3)	95B 807 521 R	Spoiler Rear Version for japan		1	I2D7/6W4
	95B 807 521 R G2X	Prime coated			
(3)	95B 807 521 Q	Spoiler Rear China version		1	IDD7/DM0/DU0 ID1V/D43/D51 I2D0/6W7
	95B 807 521 Q 1E0	Black			
(3)	95B 807 521 S	Spoiler Rear China version		1	IDU1/2D0/6W7
	95B 807 521 S G2X	Prime coated			

Model: 95B **Model life 2014>>**

Pos	Part Number	Description	Remark	Qty	Model
(3)	95B 807 521 S	Spoiler Rear China version		1	I2D7/6W7
	95B 807 521 S G2X	Prime coated			
(3)	95B 807 521 N	Spoiler Rear Turbo		1	IDU1/2D0/6W1 I6W2/6W3
	95B 807 521 N G2X	Prime coated			
(3)	95B 807 521 N	Spoiler Rear		1	I2D7/6W1/6W2 I6W3
	95B 807 521 N G2X	Prime coated			
4	N 038 549 4	Expansion rivet A-8X12		6	IB2G/B2H
5	95B 807 834	Cover Rear without Trailer coupling And Cover Stainless steel		1	I1D0/1D7/1D8 I2D0/2D7/2JB I2JC/2JU
	95B 807 834 1E0	Black			
(5)	95B 807 834 B	Cover Rear Trailer coupling Electric without Cover Stainless steel		1	I1D3/2D0/2D7 I2JB/2JC/2JU
	95B 807 834 B 1E0	Black			
(5)	95B 807 834 D	Cover Rear Trailer coupling USA without Cover Stainless steel		1	I1D6/2D0/2D7 I2JB/2JC/2JU
	95B 807 834 D 1E0	Black			
(5)	95B 807 834 D	Cover Rear Trailer coupling USA without Cover Stainless steel		1	I1D6/2D1/2D2 I2JB/2JC/2JU
	95B 807 834 D 1E0	Black			
(5)	95B 807 834 D	Cover Rear Trailer coupling USA without Cover Stainless steel		1	I1D6/2D5/2D6 I2JB/2JC/2JU
	95B 807 834 D 1E0	Black			
(5)	95B 807 834 E	Cover		1	I1D0/1D3/1D7 I1D8/2D1/2D2

Model: 95B **Model life 2014>>**

Pos	Part Number	Description	Remark	Qty	Model
		Rear Trailer coupling Electric without Cover Stainless steel			
	95B 807 834 E G2X	Prime coated			
(5)	95B 807 834 A	Cover		1	I1D0/1D7/1D8 I2D0/2D7/2JX
		Rear without Trailer coupling with Cut-outs Cover Stainless steel			
	95B 807 834 A 1E0	Black			
6	95B 807 837	Cover		1	I1D0/1D7/1D8 I2JX
		Stainless steel without Trailer coupling			
	95B 807 837 6M7	Stainless steel			
(7)	95B 807 883	Reinforcement		1	I1D3/1D6
8	WHT 004 935	Expander nut TP5X15.5		X	
9	95B 853 827 A	Wheel cover Rear	/L	1	IH6K/H6N/H6P
	95B 853 827 A 1E0	Black			
(9)	95B 853 828 A	Wheel cover Rear	/R	1	IH6K/H6N/H6P
	95B 853 828 A 1E0	Black			
10	N 909 747 01	Oval-head sheetmetal screw TP5X16-Q		X	
11	95B 807 253	Support Rear Lateral	/L	1	
(11)	95B 807 254	Support Rear Lateral	/R	1	
12	95B 807 571	Support	/L	1	
(12)	95B 807 572	Support	/R	1	
13	95B 807 863	Attachment strip Centre		1	
14	999 076 042 01	Hexagon nut M 6-S-SC		X	
15	N 907 750 01	Tapping screw ST4,8X16		2	
16	N 908 214 01	Expander nut ST 4,8		2	
17	5Q0 919 275	Sensor ParkAssist		4	I7X2/7X8/8A4
	5Q0 919 275 G2X	Prime coated			
18	5Q0 919 133	Gasket Sensor		4	I7X2/7X8/8A4
19	95B 807 997	Support Reversing camera		1	I7X8/7X9
	95B 807 997 1E0	Black			
19	95B 807 997 A	Support Reversing camera		1	I8A4
	95B 807 997 A 1E0	Black			
20	95B 807 275	Impact absorber Inner	/L	1	I5C6

Model: 95B **Model life 2014>>**

Pos	Part Number	Description	Remark	Qty	Model
		Left			
(20)	95B 807 276	Impact absorber	/R	1	I5C6
		Inner			
		Right			
21	N 104 159 03	Oval-head screw		8	
		4,0X12,0-Q			
22	95B 807 925	Grille		1	I1D0/1D3/1D7
					I1D8/2D1/2D2
					I2D5/2D6
		Cover			
		Sport Design package			
	95B 807 925 1E0	Black			
23	95B 805 885	Sound absorber		1	
		Left			
(23)	95B 805 886	Sound absorber		1	
		Right			
24	95B 807 286	Retaining clip		1	I7X8
		Reversing camera			
24	95B 807 286 A	Retaining clip		1	I8A4
		Reversing camera			

Illustration: 802-21

Model: 95B **Model life 2014>>**

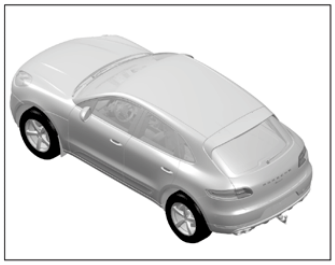

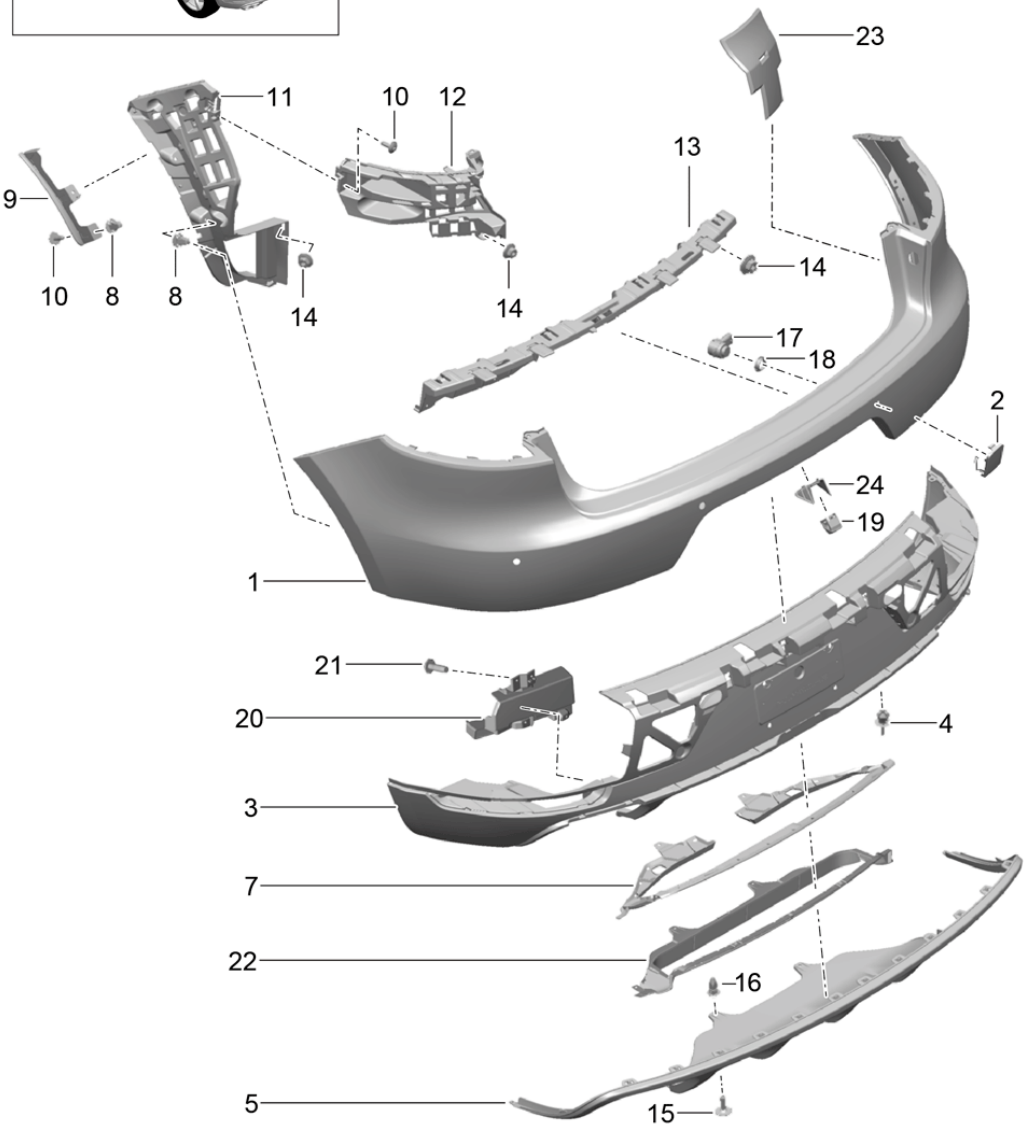

Model: 95B **Model life 2014>>**

Pos	Part Number	Description	Remark	Qty	Model
		Bumper			I2D1/2D2/2D5
					I2D6
		Rear			
		Sport Design package			
		And			
		GTS			
1	95B 807 421	Lining		1	I7X0
		Rear			
		without			
		ParkAssist			
		And			
		Reversing camera			
	95B 807 421 G2X	Prime coated			
(1)	95B 807 417 A	Lining		1	I7X2
		Rear			
		with			
		ParkAssist			
		without			
		Reversing camera			
	95B 807 417 A G2X	Prime coated			
(1)	95B 807 417 D	Lining		1	I7X8/8A4
		Rear			
		with			
		ParkAssist			
		And			
		Reversing camera			
	95B 807 417 D G2X	Prime coated			
2	95B 807 500	Cap		1	
	95B 807 500 G2X	Prime coated			
3	95B 807 521 N	Spoiler		1	I6W1/6W2/6W3
		Rear			
	95B 807 521 N G2X	Prime coated			
(3)	95B 807 521 R	Spoiler		1	I6W4
		Rear			
		Version for japan			
	95B 807 521 R G2X	Prime coated			
(3)	95B 807 521 S	Spoiler		1	I6W7
		Rear			
		China version			
	95B 807 521 S G2X	Prime coated			
4	N 038 549 4	Expansion rivet		6	
		A-8X12			IB2G/B2H
5	95B 807 834 D	Cover		1	I1D6/2JB/2JC
					I2JU
		Rear			
		Trailer coupling			
		USA			
		without			
		Cover			
		Stainless steel			
		Sport Design package			
	95B 807 834 D 1E0	Black			
(5)	95B 807 834 E	Cover		1	I1D0/1D3/1D7
					I1D8
		Rear			
		Trailer coupling			
		Electric			
		without			
		Cover			
		Stainless steel			
		Sport Design package			
	95B 807 834 E G2X	Prime coated			
(5)	95B 807 834 E	Cover	17-	1	IE0W/1D0/1D3

Model: 95B **Model life 2014>>**

Pos	Part Number	Description	Remark	Qty	Model
					I1D7/1D8/2D1
					I2D8
		Rear			
		Trailer coupling			
		Electric			
		without			
		Cover			
		Stainless steel			
		GTS			
	95B 807 834 E OK1	Black mat			
	95B 807 834 E G2X	Prime coated			
(5)	95B 807 834 F	Cover	17-	1	IE0W/1D6/2D1
					I2D2
		Rear			
		Trailer coupling			
		USA			
		without			
		Cover			
		Stainless steel			
		GTS			
	95B 807 834 F OK1	Black mat			
(7)	95B 807 883	Reinforcement		1	I1D3/1D6
8	WHT 004 935	Expander nut		X	
		TP5X15.5			
9	95B 853 827 A	Wheel cover	/L	1	IH6K/H6N/H6P
		Rear			
	95B 853 827 A 1E0	Black			
(9)	95B 853 828 A	Wheel cover	/R	1	IH6K/H6N/H6P
		Rear			
	95B 853 828 A 1E0	Black			
10	N 909 747 01	Oval-head sheetmetal screw		X	
		TP5X16-Q			
11	95B 807 253	Support	/L	1	
		Rear			
		Lateral			
(11)	95B 807 254	Support	/R	1	
		Rear			
		Lateral			
12	95B 807 571	Support	/L	1	
(12)	95B 807 572	Support	/R	1	
13	95B 807 863	Attachment strip		1	
		Centre			
14	999 076 042 01	Hexagon nut		X	
		M 6-S-SC			
15	N 907 750 01	Tapping screw		2	
		ST4,8X16			
16	N 908 214 01	Expander nut		2	
		ST 4,8			
17	5Q0 919 275	Sensor		4	I7X2/7X8/8A4
		ParkAssist			
	5Q0 919 275 G2X	Prime coated			
18	5Q0 919 133	Gasket		4	I7X2/7X8/8A4
		Sensor			
19	95B 807 997 A	Support		1	I8A4
		Reversing camera			
	95B 807 997 A 1E0	Black			
20	95B 807 275	Impact absorber	/L	1	I5C6
		Inner			
		Left			
(20)	95B 807 276	Impact absorber	/R	1	I5C6
		Inner			
		Right			
21	N 104 159 03	Oval-head screw		8	

Model: 95B **Model life 2014>>**

Pos	Part Number	Description	Remark	Qty	Model
		4,0X12,0-Q			
22	95B 807 925	Grille		1	I1D0/1D3/1D7 I1D8/2D1/2D2 I2D5/2D6
		Cover Sport Design package			
	95B 807 925 1E0	Black			
23	95B 805 885	Sound absorber Left		1	
(23)	95B 805 886	Sound absorber Right		1	
24	95B 807 286 A	Retaining clip Reversing camera		1	I8A4

Illustration: 802-30

PORSCHE

Model: 95B **Model life 2014>>**

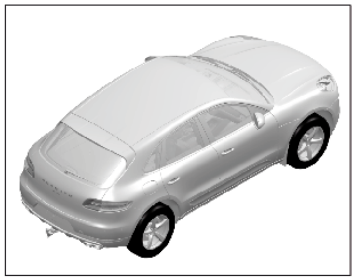

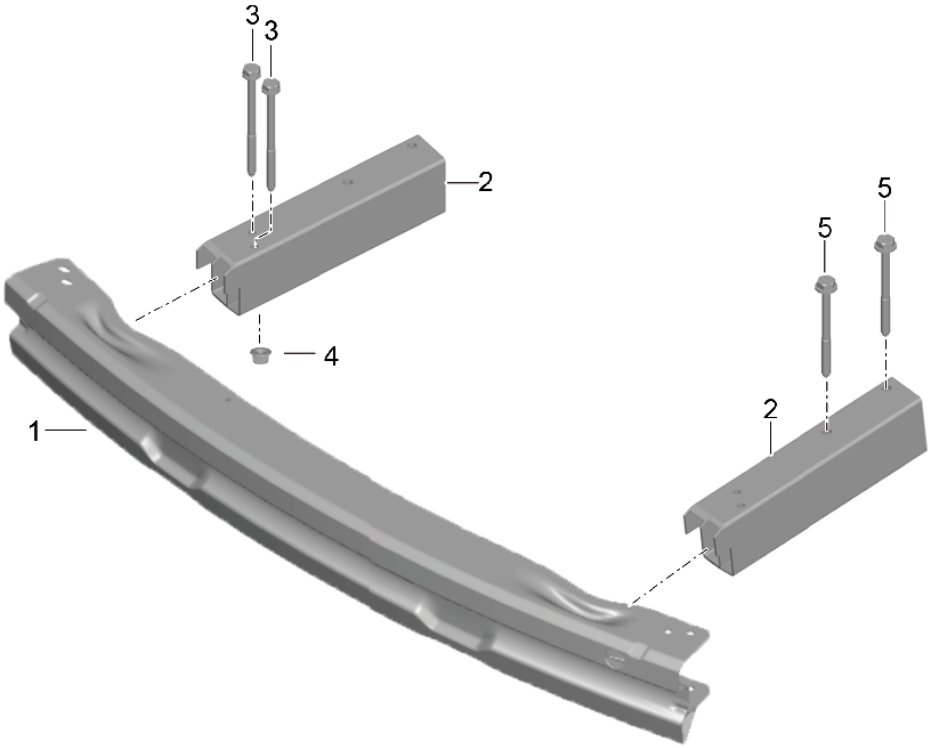

Model: 95B **Model life 2014>>**

Pos	Part Number	Description	Remark	Qty	Model
		Bumper reinforcement Rear			
1	8R0 807 313 D	Bracket Bumper		1	I1D0/1D7
1	8R0 807 313 E	Bracket Bumper		1	I1D8
2	8R0 807 331 B	Support Bumper	/L	1	I1D0/1D7
2	8R0 807 331 D	Support Bumper	/L	1	I1D8
(2)	8R0 807 332 E	Support Bumper	/R	1	I1D0/1D7
(2)	8R0 807 332 F	Support Bumper	/R	1	I1D8
3	N 907 075 02	Combination screw M8X100X41-S2		4	I1D0/1D7/1D8
4	N 905 038 01	Nut M8		4	I1D0/1D7/1D8
5	N 907 721 02	Combination screw BM10X105X45		4	I1D0/1D7/1D8

Illustration: 803-00

PORSCHE

Model: 95B **Model life 2014>>**

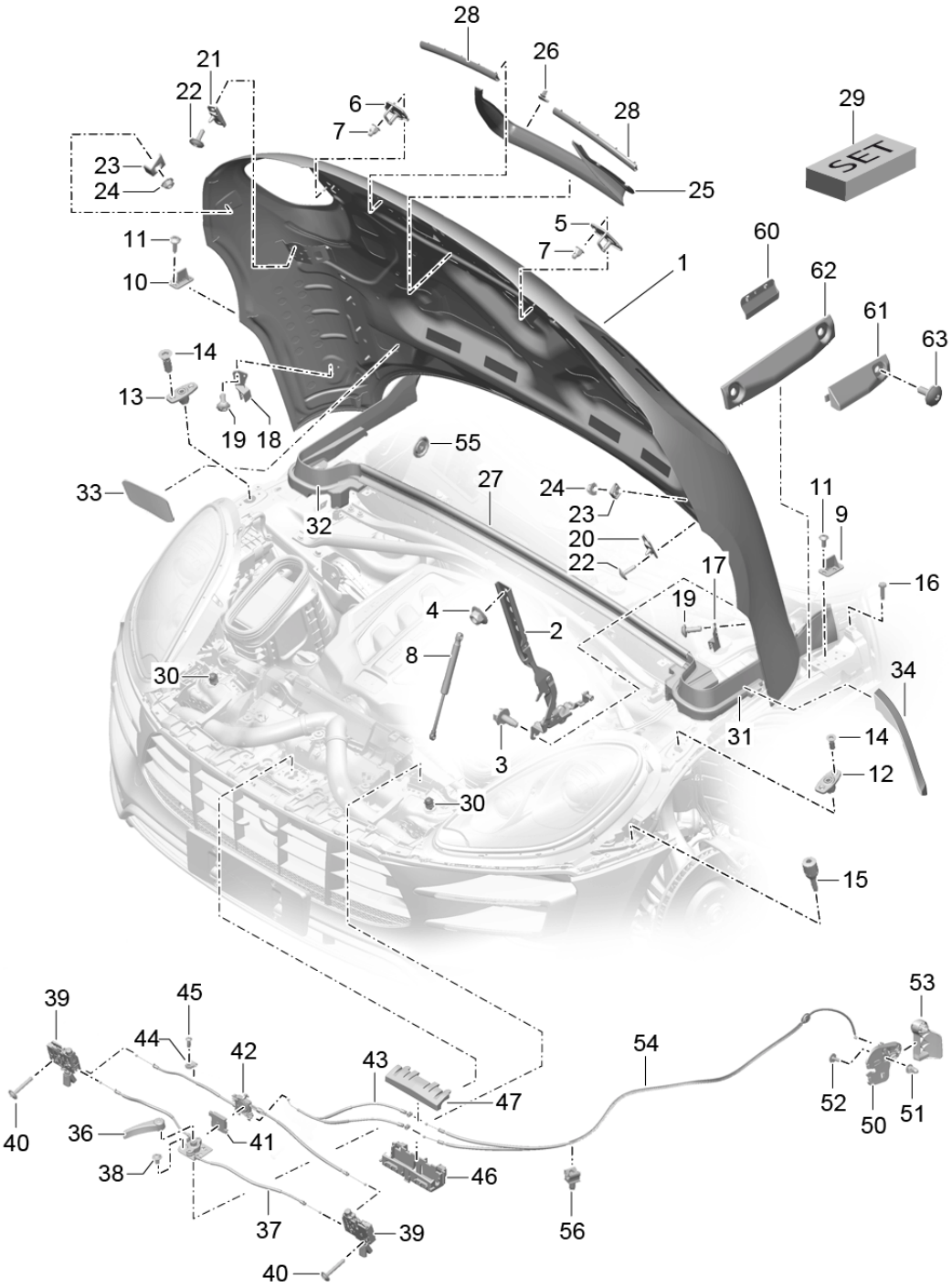

Model: 95B **Model life 2014>>**

Pos	Part Number	Description	Remark	Qty	Model
		Lid			
		Front			
1	95B 823 031 Y	Lid		1	
	95B 823 031 Y GRV	Prime coated			
1	95B 823 031 AY	Lid		1	
	95B 823 031 AY GRV	Prime coated			
1	95B 823 031 BY	Lid		1	
	95B 823 031 BY GRV	Prime coated			
1	95B 823 031 CY	Lid		1	
	95B 823 031 CY GRV	Prime coated			
2	95B 823 301 B	Hinge	/L	1	
(2)	95B 823 302 B	Hinge	/R	1	
3	N 106 860 01	Outer hexagon round screw		2	
		M8 X 20 TC			
4	N 907 611 03	Nut		3	
		M 8			
5	95B 823 259	Clip	/L	1	
6	95B 823 260	Clip	/R	1	
7	WHT 001 308	Cap nut		2	
8	95B 823 359	Damper		2	
9	95B 823 499	Buffer	/L	1	
10	95B 823 500	Buffer	/R	1	
11	N 907 809 04	Oval-head screw		3	
		M6X16			
12	7N0 843 637 B	Plate	/L	1	
13	7N0 843 638	Plate	/R	1	
14	N 910 839 01	Hexagon-head bolt		2	
		M8X25			
15	95B 845 471	Buffer		2	
16	999 072 847 02	Buffer		2	
		Hinge			
		M6X25			
17	95B 823 481	Buffer	/L	1	
18	95B 823 482	Buffer	/R	1	
19	N 907 809 04	Oval-head screw		3	
		M6X16			
20	7N0 843 841 C	Locking segment	/L	1	
21	7N0 843 842 A	Locking segment	/R	1	
22	N 911 883 01	Outer hexagon round screw		2	
		M6X20			
23	95B 823 429	Buffer		2	
24	N 023 002 13	Hexagon nut		2	
		M6			
25	95B 129 551	Sealing strip		1	IDD7/DM0/D43
					ID51
		Covering for lock			
(25)	95B 129 551 A	Sealing strip		1	IDU0/DU1
		Covering for lock			
26	95B 898 802	Clip		8	
		with			
		Ring			
27	95B 823 737	Gasket		1	
		Rear			
		Information available			
28	95B 823 727	Gasket		2	
		Front			
		Information available			
29	95B 898 051	Set of fastening parts		1	
		Gasket			
		Front			
30	955 511 500 00	Rubber buffer		2	
31	95B 823 731	Gasket	/L	1	

Model: 95B **Model life 2014>>**

Pos	Part Number	Description	Remark	Qty	Model
		Plenum panel			
32	95B 823 732	Gasket	/R	1	
		Plenum panel			
33	95B 823 739	Gasket		2	
		Bonnet			
34	95B 823 721	Seal	/L	1	
		Lid			
		To			
		Wing			
34	95B 823 721 A	Seal	/L	1	
		Lid			
		To			
		Wing			
(34)	95B 823 722	Seal	/R	1	
		Lid			
		To			
		Wing			
(34)	95B 823 722 A	Seal	/R	1	
		Lid			
		To			
		Wing			
36	95B 823 661	Actuating lever		1	
		Hook			
36	95B 823 661 A	Actuating lever		1	
		Hook			
37	95B 823 529 A	Release		1	
		Lid			
		Front			
38	N 907 371 07	Fastening screw		2	
		M6X12			
39	95B 823 509	Lock		2	
		Lid			
		Front			
39	95B 823 509 B	Lock		2	
		Lid			
		Front			
40	N 911 463 01	Round head screw		X	
		Lock			
41	4H0 823 543	Bowden cable		1	
		Lid			
42	95B 823 536	Bowden cable		1	
		Lock			
42	95B 823 536 A	Bowden cable		1	
		Lock			
43	95B 823 531	Bowden cable	/LL	1	IL0L
43	95B 823 531 B	Bowden cable	/LL 15-	1	IL0L
(43)	95B 823 531 A	Bowden cable	/RL	1	IL0R
(43)	95B 823 531 C	Bowden cable	/RL 15-	1	IL0R
44	999 511 014 01	Clip		X	
		5X12			
45	N 908 249 02	Oval-head screw		X	
		5X14			
46	95B 823 411	Mounting	15-	1	
		Bowden cable			
47	95B 823 347	Cap	15-	1	
		Bowden cable			
50	8R1 823 633	Bearing bracket	/LL	1	IL0L
	8R1 823 633 01C	Satin black			
(50)	8R2 823 633	Bearing bracket	/RL	1	IL0R
	8R2 823 633 01C	Satin black			
51	N 911 214 01	Expander nut		1	
		4,2X21			
52	N 907 750 01	Tapping screw		1	

Model: 95B **Model life 2014>>**

Pos	Part Number	Description	Remark	Qty	Model
		4,8X16			
53	8T1 823 533 B	Lever	/LL	1	IL0L
	8T1 823 533 B 1E0	Black			
	8T1 823 533 B OP1	Agate Grey			
	8T1 823 533 B 4H0	Luxor Beige			
	8T1 823 533 B OM8	Saddle Tan	15-		
	8T1 823 533 B OV4	Pebble Grey	15-		
	8T1 823 533 B 7N0	Espresso	15-		
(53)	8T2 823 533 B	Lever	/RL	1	IL0R
	8T2 823 533 B 1E0	Black			
	8T2 823 533 B OP1	Agate Grey			
	8T2 823 533 B 4H0	Luxor Beige			
	8T2 823 533 B OM8	Saddle Tan	15-		
	8T2 823 533 B OV4	Pebble Grey	15-		
	8T2 823 533 B 7N0	Espresso	15-		
54	95B 823 535	Bowden cable		1	
55	191 971 908	Stopper		1	
		Passenger's side			
56	955 511 645 00	Clip		1	
		POS54			
60	95B 823 493	Guide piece	/L	1	
		Lid			
		Front			
(60)	95B 823 494	Guide piece	/R	1	
		Lid			
		Front			
61	95B 823 417	Guide piece	/L	1	
		Wing			
		Front			
(61)	95B 823 418	Guide piece	/R	1	
		Wing			
		Front			
62	95B 821 235	Guide piece	/L	1	
		Wing			
(62)	95B 821 236	Guide piece	/R	1	
		Wing			
63	N 910 423 02	Lens-head screw		X	
70	95B 863 237	Rubber stop	/L	1	
70	95B 863 237 A	Rubber stop	/L	1	
71	95B 863 238	Rubber stop	/R	1	
71	95B 863 238 A	Rubber stop	/R	1	
72	95B 863 230	Cap		X	
		Rubber stop			

Illustration: 803-05

PORSCHE

Model: 95B **Model life 2014>>**

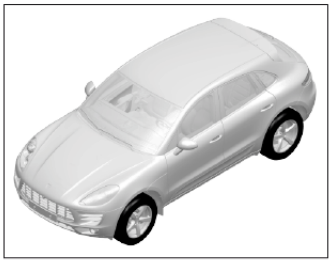

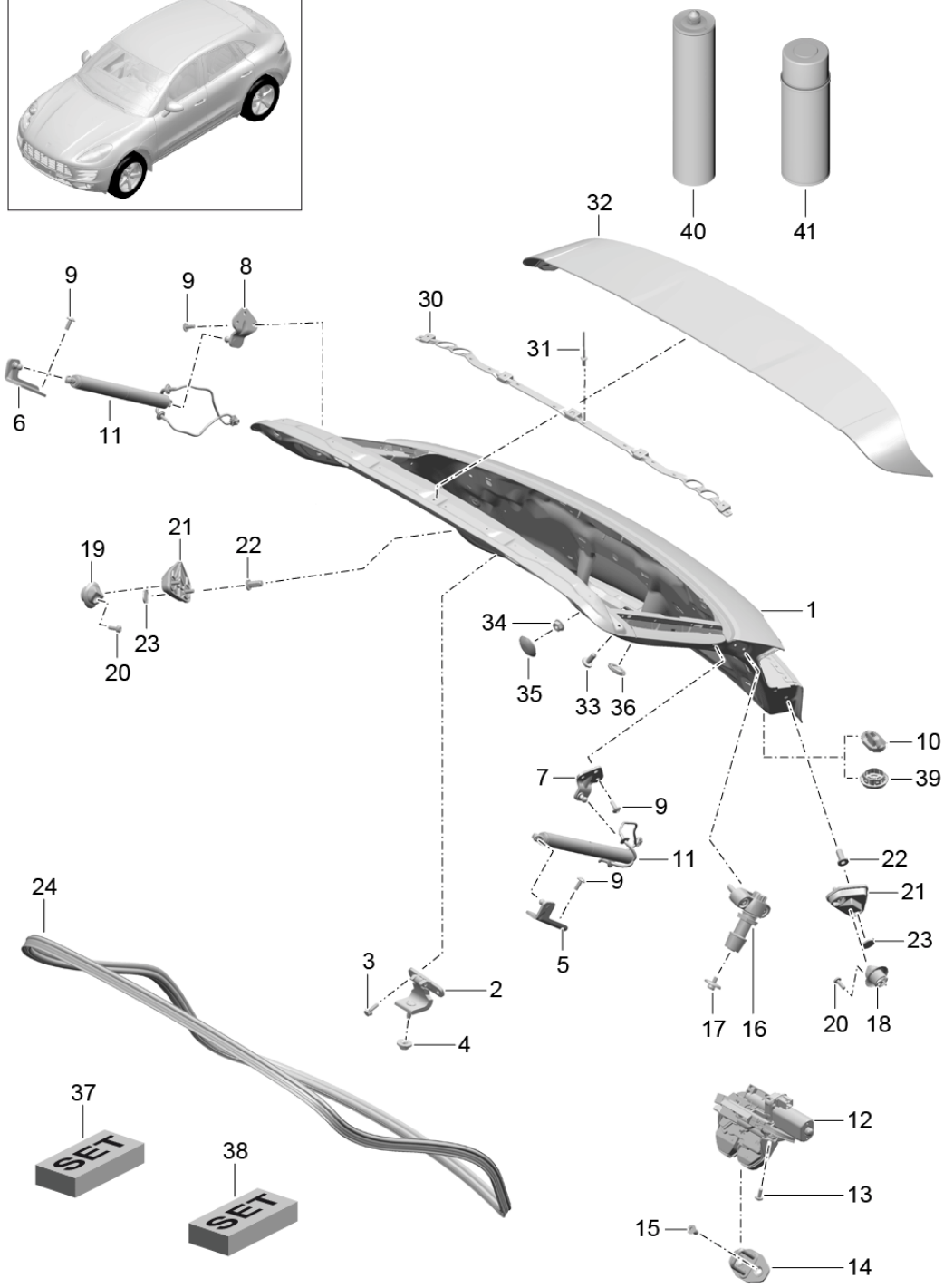

Model: 95B **Model life 2014>>**

Pos	Part Number	Description	Remark	Qty	Model
		Rear lid			
1	95B 827 025 Y	Rear lid		1	
	95B 827 025 Y GRV	Prime coated			
		Use also:			
		Sealing compound			
		000.043.207.67			
		See workshop manual			
		5X00IN42			
1	95B 827 025 BY	Rear lid		1	
	95B 827 025 BY GRV	Prime coated			
		Use also:			
		Sealing compound			
		000.043.207.67			
		See workshop manual			
		5X00IN42			
1	95B 827 025 CY	Rear lid		1	
	95B 827 025 CY GRV	Prime coated			
		Use also:			
		Sealing compound			
		000.043.207.67			
		See workshop manual			
		5X00IN42			
2	8U0 827 299 A	Hinge	/L	1	
(2)	8U0 827 300 A	Hinge	/R	1	
3	N 106 533 02	Hexagon-head bolt		X	
		M 6 X 20			
4	N 905 115 05	Combined nut		2	
		M 6 X 20			
5	95B 827 427 B	Bearing bracket	/L	1	
		Driving mechanism			
6	95B 827 428 B	Bearing bracket	/R	1	
		Driving mechanism			
7	95B 827 601 A	Support	/L	1	
		Driving mechanism			
8	95B 827 602 A	Support	/R	1	
		Driving mechanism			
9	N 907 809 01	Round head screw		X	
		M6X16			
10	8P4 827 951 A	Stopper		2	
		Rear lid			
		Lower			
		Oval			
11	95B 827 851 B	Powerlift		1	
		Rear lid			
12	95B 827 505	Lock upper part		1	
		Rear lid			
13	N 910 967 03	Torx screw		2	
		M6X16			
14	7P0 827 517 F	Catch bar		1	
15	N 907 448 05	Countersunk-head screw		2	
		M8X20			
16	95B 827 239	Buffer		2	
17	958 512 475 00	Stopper		2	
		Stop plate			
18	95B 829 733	Guide wedge	/L	1	
		Rear lid			
19	95B 829 734	Guide wedge	/R	1	
		Rear lid			
20	N 101 961 03	Oval-head screw		2	
		M6X18			
21	95B 827 679	Guide wedge		2	
22	N 906 481 02	Blind rivet nut		X	
23	95B 827 751	Cover		X	

Model: 95B **Model life 2014>>**

Pos	Part Number	Description	Remark	Qty	Model
24	95B 827 705 C	Gasket		1	
30	95B 827 933	Retaining strip		1	
		Spoiler			
31	N 016 206 1	Blind rivet		10	
		Retaining strip			
32	95B 827 934	Rear spoiler		1	
	95B 827 934 G2X	Prime coated			
32	95B 827 934 B	Rear spoiler		1	
	95B 827 934 B G2X	Prime coated			
33	N 910 967 01	Round head screw		2	
		M6X16			
34	N 015 082 10	Hexagon nut		2	
		M6			
35	958 512 975 00	Cap		2	
		20MM			
36	958 512 976 00	Cap		2	
		15MM			
37	95B 898 056	Set of fastening parts		1	
		Comprising:			
		Gasket		2	
		Screw		2	
		Fastening part		3	
38	95B 898 064	Set of fastening parts		1	
		Rear spoiler			
		Comprising:			
		Gasket		1	
		Between			
		Rear spoiler			
		And			
		Rear window			
39	958 502 899 00	Drain bush		2	
		Rear lid			
		Lower			
		Round			
40	000 043 207 67	Sealing compound		1	
		TEROSON			
20	000 043 204 85	Cavity preservation		1	
50	9A7 005 207 00	Blind rivet screw		3	
		M6X22			

Illustration: 804-00

PORSCHE

Model: 95B **Model life 2014>>**

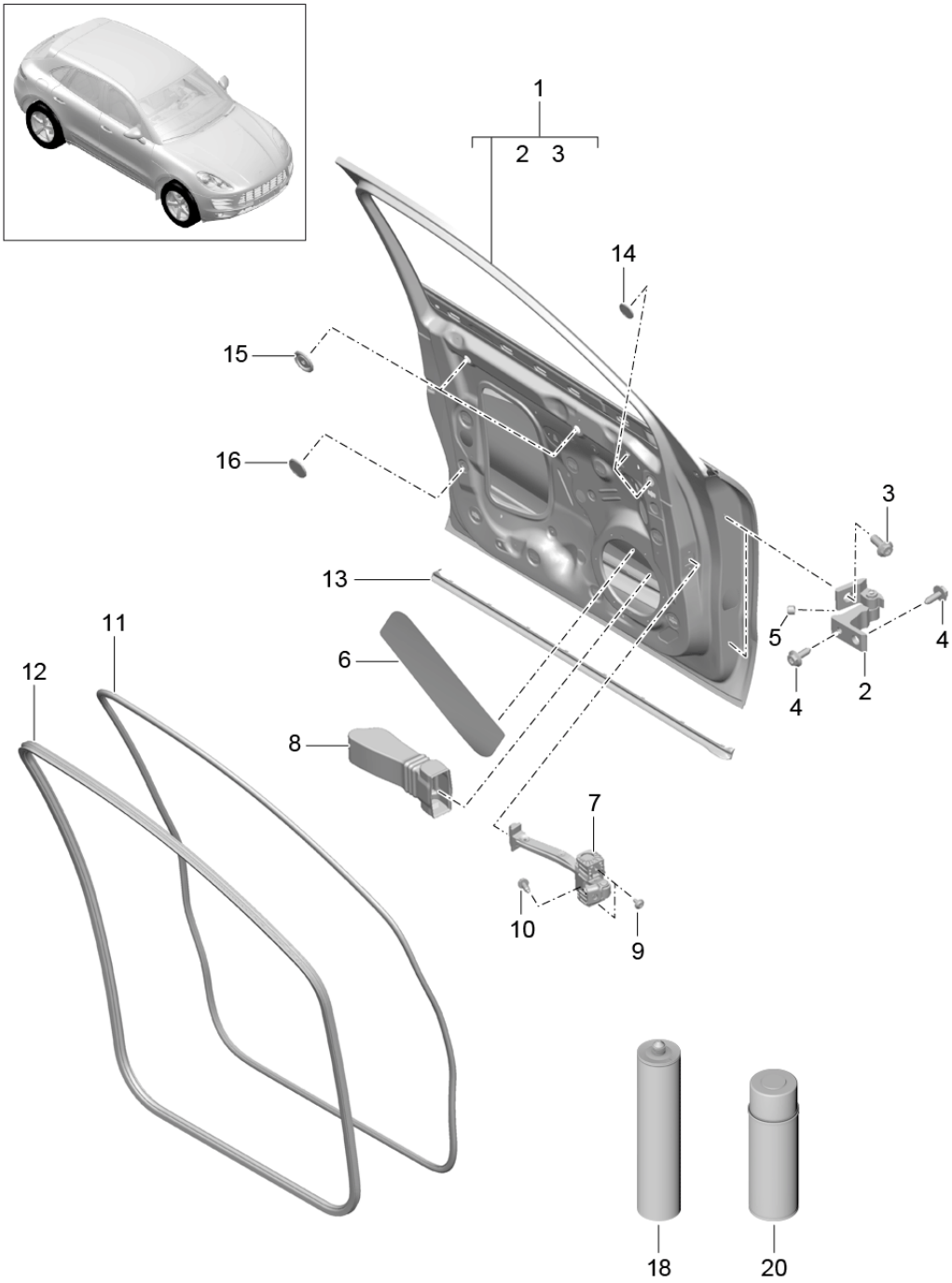

Model: 95B **Model life 2014>>**

Pos	Part Number	Description	Remark	Qty	Model
		Bare door shell Front Gaskets			
1	95B 831 021 95B 831 021 GRV	Bare door shell Prime coated Use also: Sealing compound 000.043.207.67 See workshop manual 5X00IN42	/L	1	
(1)	95B 831 022 95B 831 022 GRV	Bare door shell Prime coated Use also: Sealing compound 000.043.207.67 See workshop manual 5X00IN42	/R	1	
2	4G0 831 401 D	Hinge	/L	2	
(2)	4G0 831 402 D	Hinge	/R	2	
3	N 911 428 01	Pan-head screw M 10 X 25		4	
4	N 909 305 03	Pan-head screw M 8 X 24		8	
5	958 537 947 00	Cap Hinge		4	
6	8K0 837 833 A	Insulation		2	
7	8R0 837 249 F	Door arrester		2	
8	8R0 837 267 C	Cover Door arrester		2	
9	WHT 003 237	Hexagon socket head bolt M 6 X 12		4	
10	WHT 003 497	Combination screw M 8 X 23		2	
11	95B 837 911	Door seal Outer Information available		2	
12	95B 831 721 A	Door seal Inner		2	
13	95B 837 119 A	Door seal Door sill	/L	1	
(13)	95B 837 120 A	Door seal Door sill	/R	1	
14	AKL 437 D40	Seal		4	
15	191 971 908	Stopper 23MM		4	
16	999 911 659 40	Gasket 30MM		2	
18	000 043 207 67	Sealing compound TEROSON		1	
20	000 043 204 85	Cavity preservation		1	

Illustration: 804-05

PORSCHE

Model: 95B **Model life 2014>>**

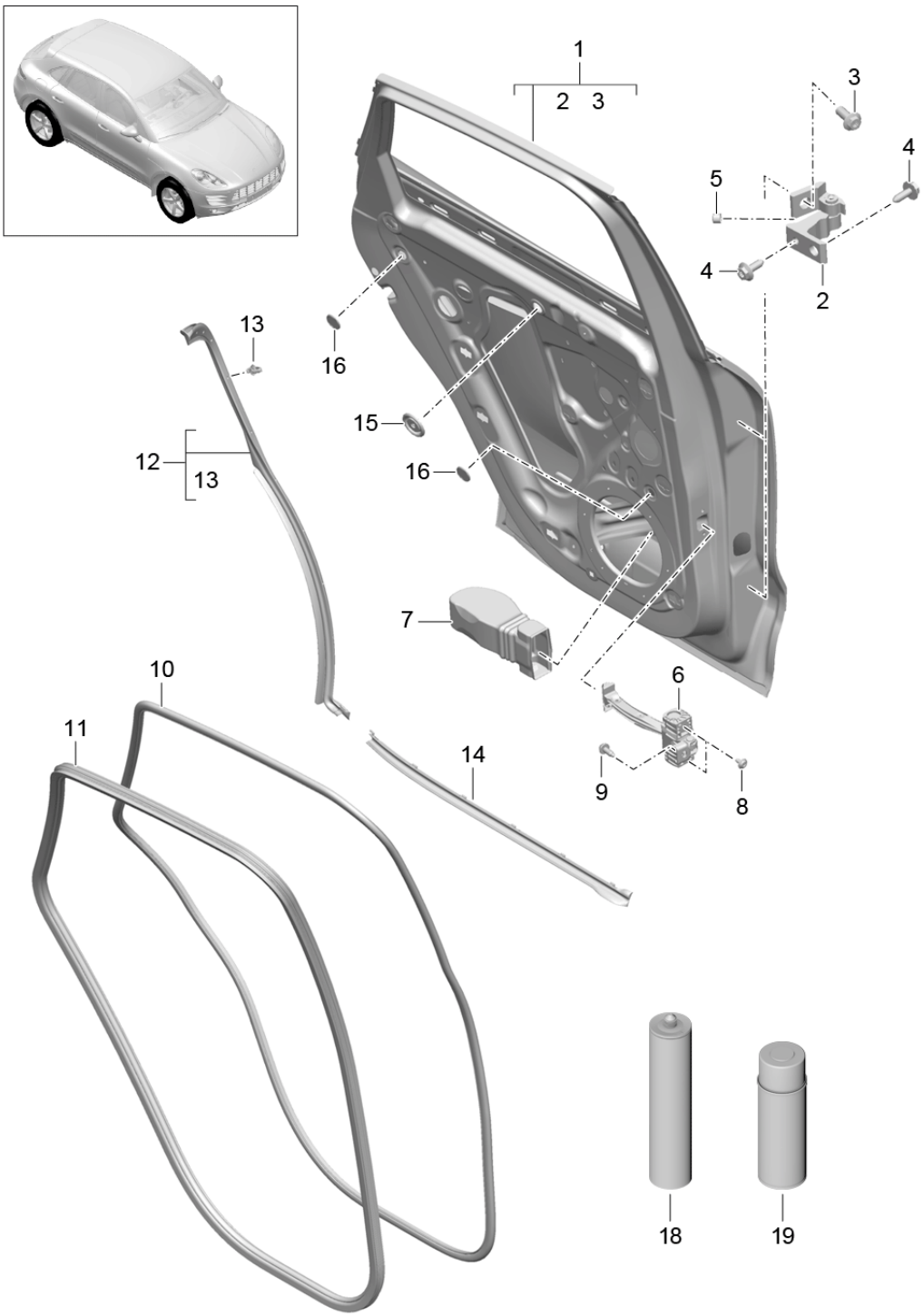

Model: 95B **Model life 2014>>**

Pos	Part Number	Description	Remark	Qty	Model
		Bare door shell Rear Gaskets			
1	95B 833 021 95B 833 021 GRV	Bare door shell Prime coated Use also: Sealing compound 000.043.207.67 See workshop manual 5X00IN42	/L	1	
1	95B 833 022 95B 833 022 GRV	Bare door shell Prime coated Use also: Sealing compound 000.043.207.67 See workshop manual 5X00IN42	/R	1	
2	4G0 831 401 D	Hinge	/L	2	
(2)	4G0 831 402 D	Hinge	/R	2	
3	N 911 428 01	Pan-head screw M 10 X 25		4	
4	N 909 305 03	Pan-head screw M 8 X 24		8	
5	958 537 947 00	Cap Hinge		4	
6	8R0 839 249 F	Door arrester		2	
7	8R0 839 267 B	Cover Door arrester		2	
8	WHT 003 237	M 6 X 12		4	
9	WHT 003 497	Combination screw M 8 X 23		2	
10	95B 839 911	Door seal Outer Information available		2	
11	95B 833 721 A	Door seal Inner		2	
12	95B 839 761 B	Door seal C-pillar	/L	1	
(12)	95B 839 762 B	Door seal C-pillar	/R	1	
13	95B 837 069	Clip Door seal C-pillar		X	
14	95B 839 119 A	Door seal Door sill	/L	1	
(14)	95B 839 120 A	Door seal Door sill	/R	1	
15	191 971 908	Stopper 23MM		2	
16	999 911 659 40	Gasket 30MM		4	
18	000 043 207 67	Sealing compound TEROSON		1	
19	000 043 204 85	Cavity preservation		1	

Illustration: 804-10

Model: 95B **Model life 2014>>**

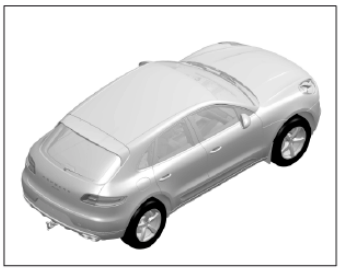

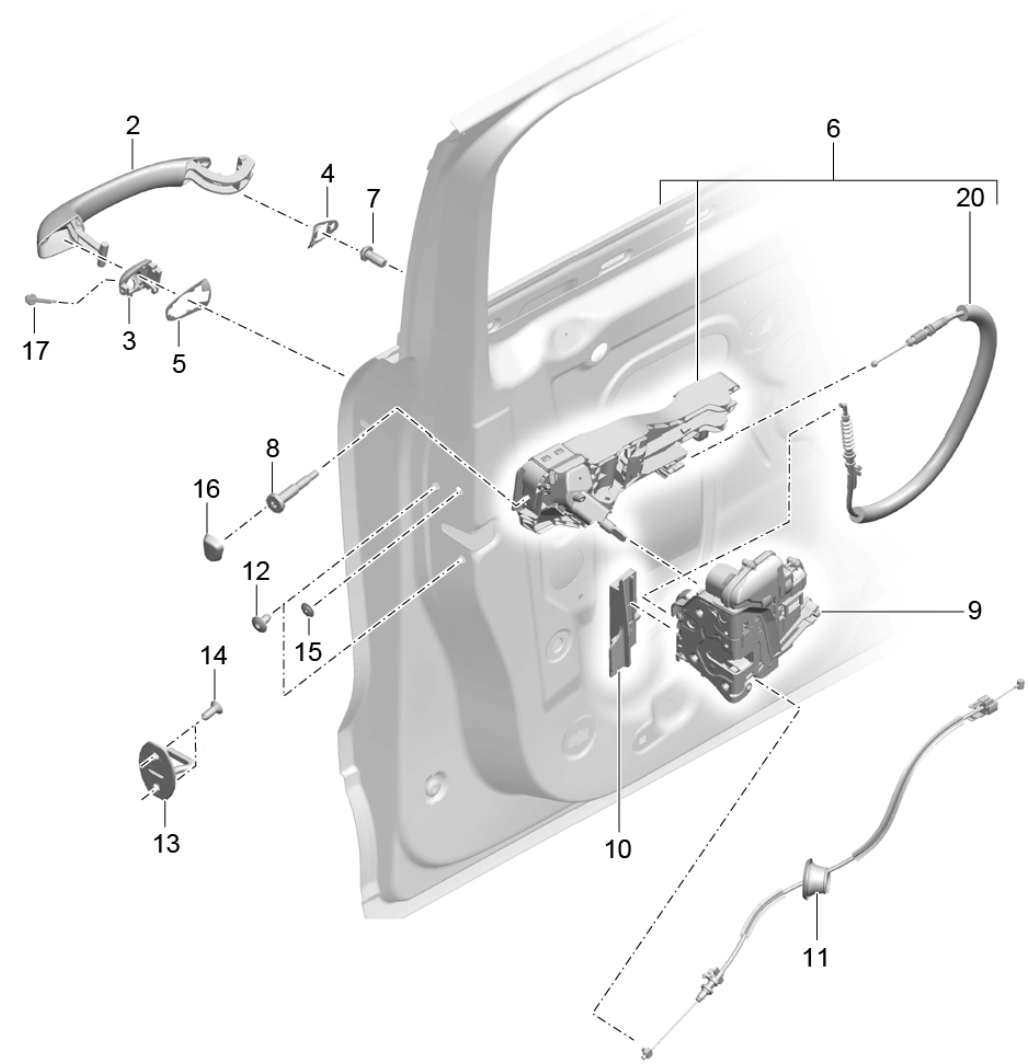

Model: 95B **Model life 2014>>**

Pos	Part Number	Description	Remark	Qty	Model
		Door handle			
		Door lock			
		Front			
1		Handheld transmitter		1	
		See group			
		9/01/04			
2	95B 837 205	Door handle	/L	1	I4K0/4K3
	95B 837 205 G2X	Prime coated			
(2)	95B 837 206	Door handle	/R	1	I4K0/4K3
	95B 837 206 G2X	Prime coated			
(2)	95B 837 205 A	Door handle	/L	1	I4F2/4F6
	95B 837 205 A G2X	Prime coated			
(2)	95B 837 206 A	Door handle	/R	1	I4F2/4F6
	95B 837 206 A G2X	Prime coated			
3	95B 837 329	Protection cap	/LL /L	1	IL0L
		Driver's door			
(3)	95B 837 330	Protection cap	/RL /R	1	IL0R
		Driver's door			
(3)	95B 839 330	Protection cap	/LL /R	1	IL0L
		Passenger's door			
(3)	95B 839 329	Protection cap	/RL /L	1	IL0R
		Passenger's door			
4	95B 837 209	Desk pad	/L	1	
		Front			
(4)	95B 837 210	Desk pad	/R	1	
		Front			
5	95B 837 277	Desk pad	/L	1	
		Rear			
(5)	95B 837 278	Desk pad	/R	1	
		Rear			
6	95B 800 375 H	Supporting bow	/LL /L	1	IL0L/4K0/4K3
		Included			
		Lock cylinder			
		Chassis number			
		And			
		State lock number			
(6)	95B 839 886 B	Supporting bow	/LL /R	1	IL0L/4K0/4K3
(6)	95B 800 375 J	Supporting bow	/RL /R	1	IL0R/4K0/4K3
		Included			
		Lock cylinder			
		Chassis number			
		And			
		State lock number			
(6)	95B 839 885 B	Supporting bow	/RL /L	1	IL0R/4K0/4K3
(6)	95B 800 375 K	Supporting bow	/LL /L	1	IL0L/4F2/4F6
		Included			
		Lock cylinder			
		Chassis number			
		And			
		State lock number			
(6)	95B 839 886 C	Supporting bow	/LL /R	1	IL0L/4F2/4F6
(6)	95B 800 375 L	Supporting bow	/RL /R	1	IL0R/4F2/4F6
		Included			
		Lock cylinder			
		Chassis number			
		And			
		State lock number			
(6)	95B 839 885 C	Supporting bow	/RL /L	1	IL0R/4F2/4F6
7	N 911 768 01	Screw		2	
		M5 X 10			
8	WHT 002 684	Fit bolt		1	
		M4 X 28			
		Driver's door			

Model: 95B **Model life 2014>>**

Pos	Part Number	Description	Remark	Qty	Model
9	4G1 837 015	Door lock Front	/LL /L	1	IL0L/4F2/4K3 I7AC/7AK/7AL
(9)	4G1 837 015 A	Door lock Front	/LL /L	1	IL0L/4F2/4K3 I7AA/7AB
(9)	8J1 837 016 C	Door lock Front	/LL /R	1	IL0L/4F2/4K3 I7AC/7AK/7AL
(9)	8J1 837 016 D	Door lock Front	/LL /R	1	IL0L/4F2/4K3 I7AA/7AB
(9)	4G2 837 016	Door lock Front	/RL /R	1	IL0R/4F2/4K3 I7AC/7AK
(9)	4G2 837 016 A	Door lock Front	/RL /R	1	IL0R/4F2/4K3 I7AA/7AB
(9)	8J2 837 016 F	Door lock Front	/RL /R	1	IL0R/4F2/4K3 I7AA/7AB
(9)	8J2 837 016 E	Door lock Front	/RL /R	1	IL0R/4F2/4K3 I7AC/7AK/7AL
(9)	8J2 837 015 E	Door lock Front	/RL /L	1	IL0R/4F2/4K3 I7AC/7AK/7AL
(9)	8J2 837 015 F	Door lock Front	/RL /L	1	IL0R/4F2/4K3 I7AA/7AB
10	95B 837 349	Cover Door lock	/L	1	
(10)	95B 837 350	Cover Door lock	/R	1	
11	95B 837 085	Bowden cable Door handle Inner		2	
12	WHT 003 688	Combination screw M8 X 16		4	
13	3C0 837 767 A	Closing element		2	
14	N 910 174 02	Countersunk-head screw M8 X 22		4	
15	958 531 111 00	Cap		2	
16	958 531 211 00 958 531 211 00 9B9	Cap Black		2	
17	95B 837 491	Stopper Lock cylinder		1	
20	95B 837 017	Bowden cable Door handle Outer		2	

Illustration: 804-15

PORSCHE

Model: 95B **Model life 2014>>**

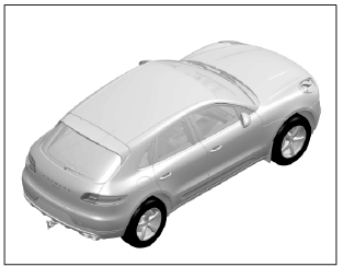

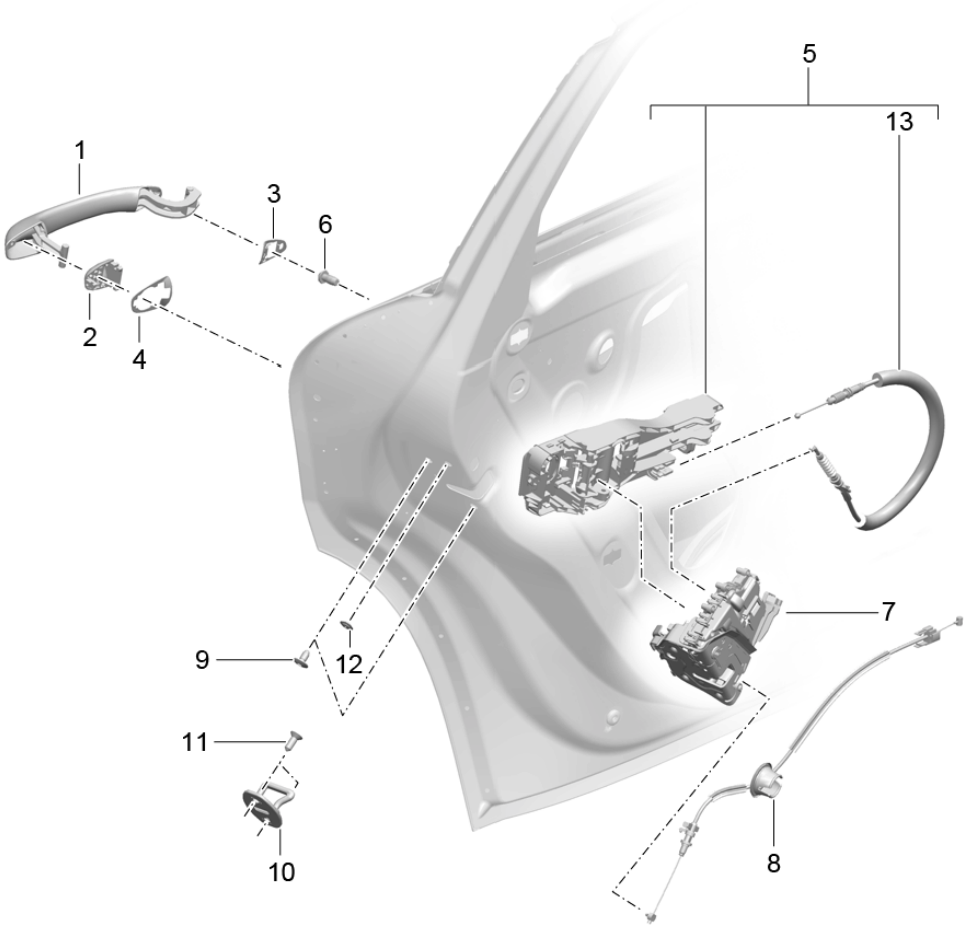

Model: 95B **Model life 2014>>**

Pos	Part Number	Description	Remark	Qty	Model
		Door handle Door lock Rear			
1	95B 837 205 95B 837 205 G2X	Door handle Prime coated	/L	1	I4K0/4K3
(1)	95B 837 206 95B 837 206 G2X	Door handle Prime coated	/R	1	I4K0/4K3
(1)	95B 837 205 A 95B 837 205 A G2X	Door handle Prime coated	/L	1	I4F2/4F6
(1)	95B 837 206 A 95B 837 206 A G2X	Door handle Prime coated	/R	1	I4F2/4F6
2	95B 839 329	Protection cap	/L	1	
(2)	95B 839 330	Protection cap	/R	1	
3	95B 837 209	Desk pad Front	/L	1	
(3)	95B 837 210	Desk pad Front	/R	1	
4	95B 837 277	Desk pad Rear	/L	1	
(4)	95B 837 278	Desk pad Rear	/R	1	
5	95B 839 885 B	Supporting bow	/L	1	I4K0/4K3
(5)	95B 839 886 B	Supporting bow	/R	1	I4K0/4K3
(5)	95B 839 885 C	Supporting bow	/L	1	I4F2/4F6
(5)	95B 839 886 C	Supporting bow	/R	1	I4F2/4F6
6	N 911 768 01	Screw M5 X 10		2	
7	8K0 839 015 C	Door lock Rear	/L	1	I4F2/4K3/7AC I7AK/7AL
(7)	8K0 839 015 E	Door lock Rear	/L	1	I4F2/4K3/7AA I7AB
(7)	8K0 839 016 C	Door lock Rear	/R	1	I4F2/4K3/7AC I7AK/7AL
(7)	8K0 839 016 E	Door lock Rear	/R	1	I4F2/4K3/7AA I7AB
8	95B 839 085	Bowden cable Door handle Inner		2	
9	WHT 003 688	Combination screw M8 X 16		4	
10	3C0 837 767 A	Closing element		2	
11	N 910 174 02	Countersunk-head screw M8 X 22		4	
12	958 531 111 00	Cap		2	
13	95B 837 017	Bowden cable Door handle Outer		2	

Illustration: 804-30

PORSCHE

Model: 95B **Model life 2014>>**

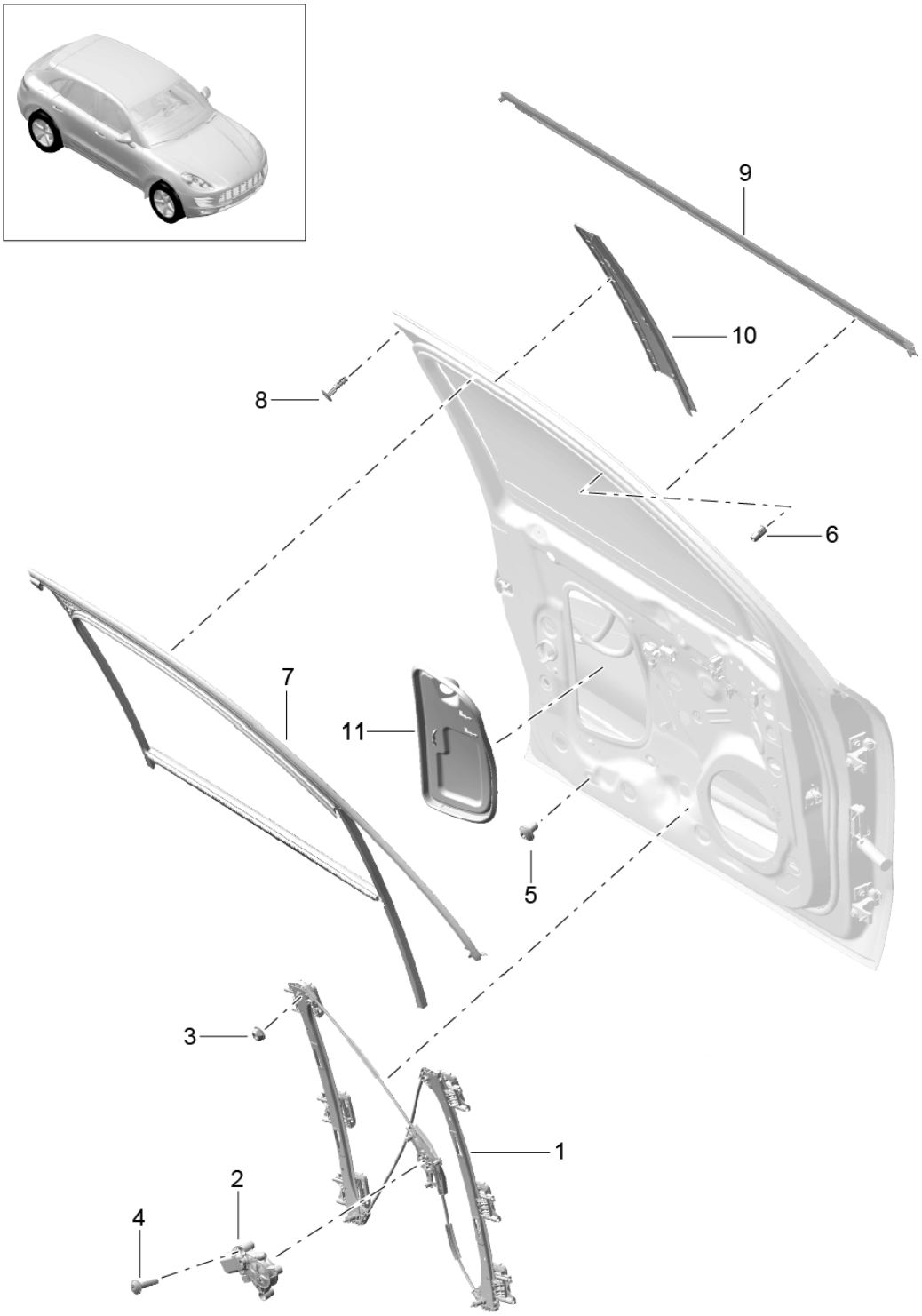

Model: 95B **Model life 2014>>**

Pos	Part Number	Description	Remark	Qty	Model
		Power windows			
		Doors			
		Front			
1	95B 837 461	Power windows	/L	1	
		without			
		Engine			
(1)	95B 837 462	Power windows	/R	1	
		without			
		Engine			
2	5Q0 959 801 B	Engine	/L	1	
(2)	5Q0 959 802 B	Engine	/R	1	
		Mount			
3	N 023 002 13	Hexagon nut		X	
		M6			
4	N 907 397 04	Screw		X	
		TP 5 X 22			
5	N 106 538 01	Fastening screw		8	
6	N 910 167 02	Blind rivet nut		2	
		Window guide			
		Front			
7	95B 837 431	Window guide	/L	1	
(7)	95B 837 432	Window guide	/R	1	
		Mount			
8	95B 831 719	Clip		2	
9		Sealing for door slot			
		Outer			
		See illustrations			
		8/10/00			
10		Cover			
		B-pillar			
		See illustrations			
		8/10/00			
		Cover			
		Door			
		Inner panel			
11	95B 837 915	Cover	/L	1	
(11)	95B 837 916	Cover	/R	1	

Illustration: 804-40

PORSCHE

Model: 95B **Model life 2014>>**

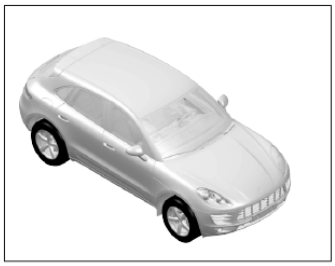

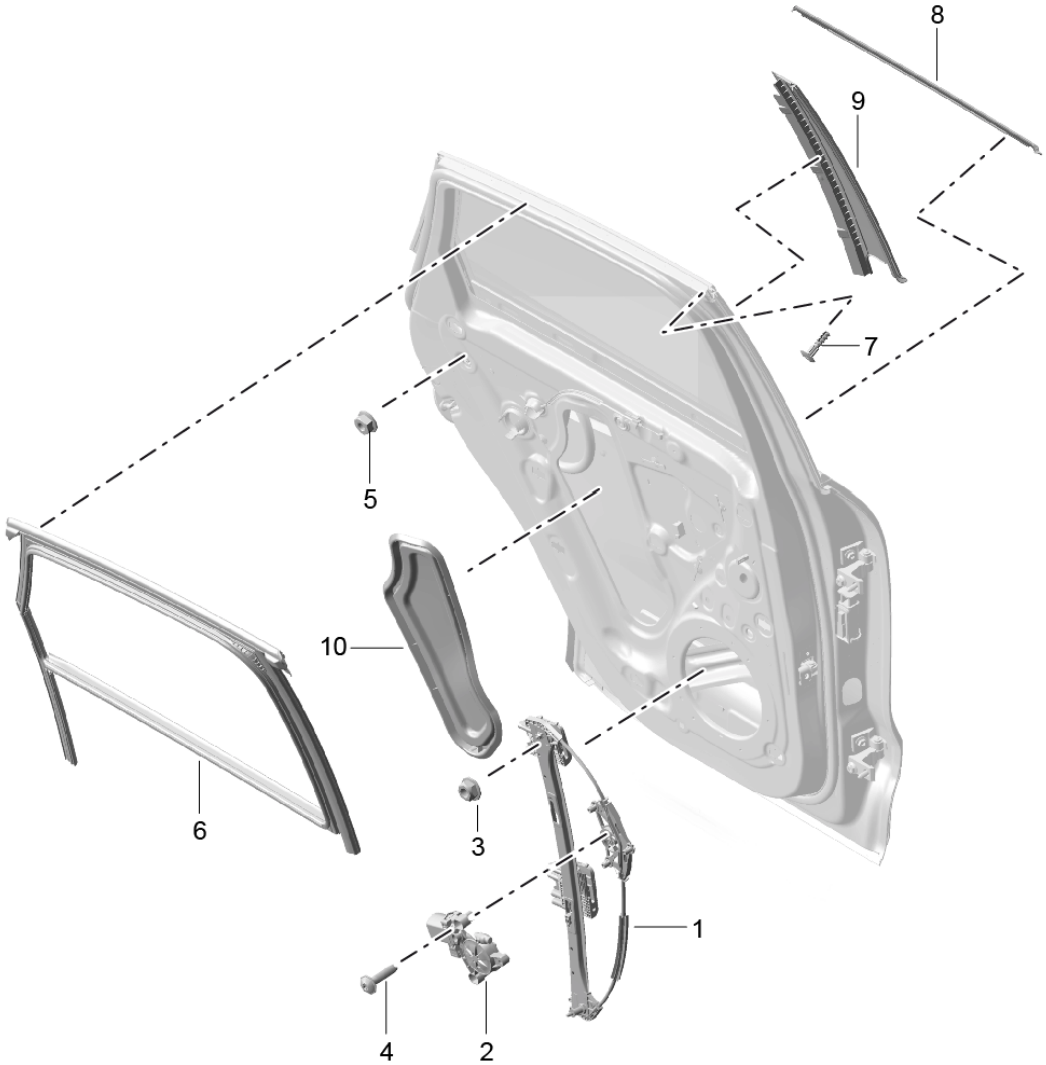

Model: 95B **Model life 2014>>**

Pos	Part Number	Description	Remark	Qty	Model
		Power windows			
		Doors			
		Rear			
(1)	95B 839 461	Power windows	/L	1	
		without			
		Engine			
(1)	95B 839 462	Power windows	/R	1	
		without			
		Engine			
2	5Q0 959 801 A	Engine	/L	1	
(2)	5Q0 959 802 A	Engine	/R	1	
		Mount			
3	N 023 002 13	Hexagon nut		X	
		M6			
4	N 907 397 04	Screw		X	
		TP 5 X 22			
5	N 015 082 10	Hexagon nut		4	
		M6			
		Window guide			
		Rear			
6	95B 839 431	Window guide	/L	1	
(6)	95B 839 432	Window guide	/R	1	
		Mount			
7	95B 831 719	Clip		2	
8		Sealing for door slot			
		Outer			
		See illustrations			
		8/10/00			
9		Cover			
		C-pillar			
		See illustrations			
		8/10/00			
		Cover			
		Door			
		Inner panel			
10	95B 839 915	Cover	/L	1	
(10)	95B 839 916	Cover	/R	1	

Illustration: 805-00

PORSCHE

Model: 95B **Model life 2014>>**

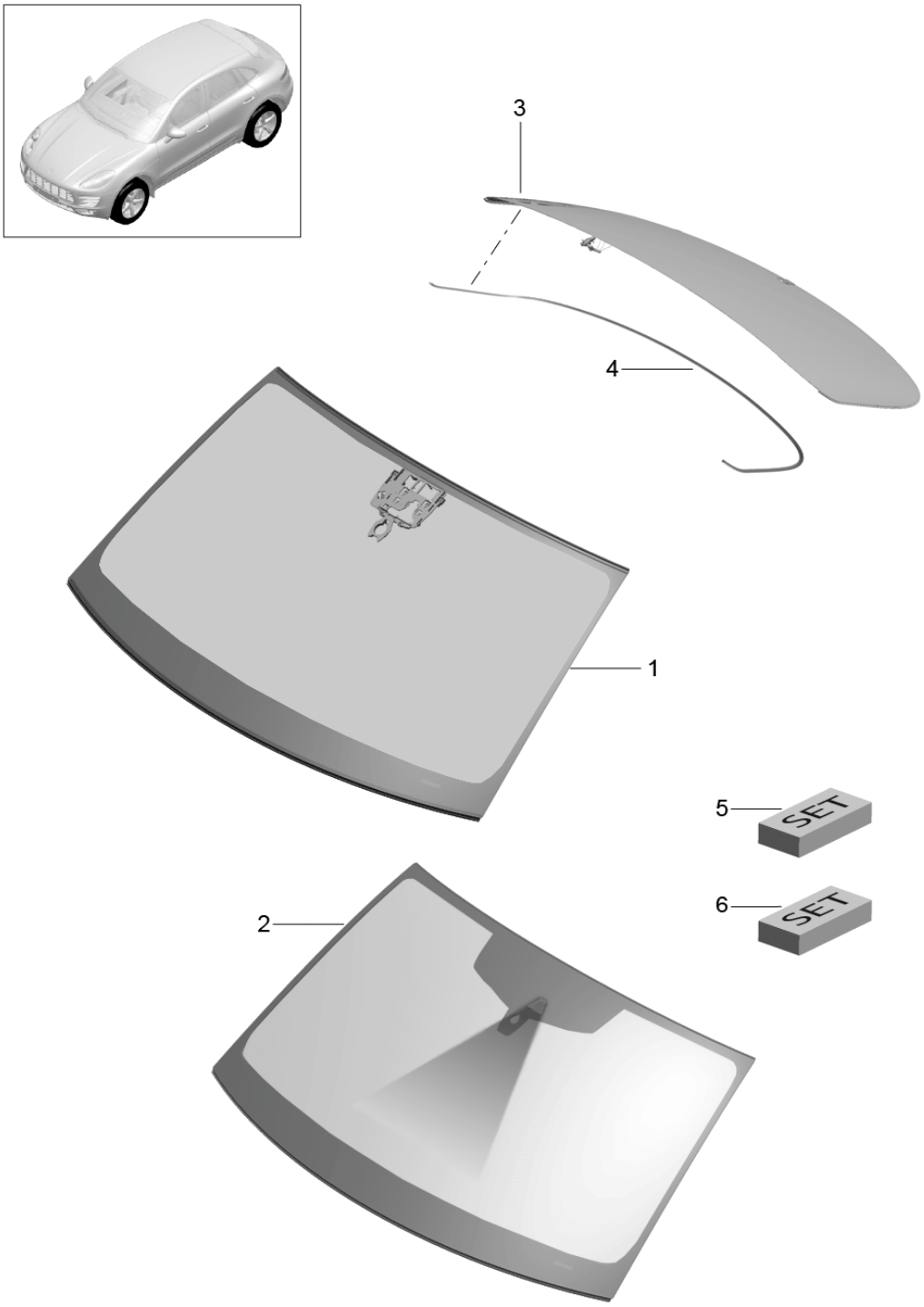

Model: 95B **Model life 2014>>**

Pos	Part Number	Description	Remark	Qty	Model
		window glazing	-16		
1	95B 845 099 HY	Windscreen without Camera Use also: 000.043.303.19		1 1	-I4GK/I3W4 I4GC
(1)	95B 845 099 JY	Windscreen without Camera Use also: 000.043.303.19		1 1	-I3W4/-I4GK I4GC
(1)	95B 845 099 NY	Windscreen without Camera Use also: 000.043.303.19		1 1	-I4GC/I4GK
(1)	95B 845 099 PY	Windscreen without Camera Use also: 000.043.303.19		1 1	-I4GC/I4GK I7Q4
2	95B 845 099 LY	Windscreen with Camera Use also: 000.043.303.19		1 1	-I4GK/I3W4 I4GC
(2)	95B 845 099 MY	Windscreen with Camera Use also: 000.043.303.19		1 1	-I3W4/-I4GK I4GC
(2)	95B 845 099 QY	Windscreen with Camera Use also: 000.043.303.19		1 1	-I4GC/I4GK
(2)	95B 845 099 RY	Windscreen with Camera Use also: 000.043.303.19		1 1	-I4GC/I4GK I7Q4
3	95B 845 051 H	Rear window Use also: 000.043.303.19		1 1	-I7Q4/IQU0 IQV3/QV4/QV8 I4KC
(3)	95B 845 051 A	Rear window Use also: 000.043.303.19		1 1	IQV0/QV1/QV5 I4KC
(3)	95B 845 051 C	Rear window Use also: 000.043.303.19		1 1	IQV0/QV1/QV5 I4KF
(3)	95B 845 051 M	Rear window		1 1	-I7Q4/IQU0 IQV3/QV4/QV8 IVW5

Model: 95B **Model life 2014>>**

Pos	Part Number	Description	Remark	Qty	Model
		Use also:			
		000.043.303.19		1	
(3)	95B 845 051 E	Rear window		1	IQV0/QV1/QV5 IVW5
		Use also:			
		000.043.303.19		1	
(3)	95B 845 051 G	Rear window		1	IQV0/QV1/QV5 IVW1
		Use also:			
		000.043.303.19		1	
(3)	95B 845 051 Q	Rear window		1	IQV0/QV1/QV5 IVW1
		Use also:			
		000.043.303.19		1	
(3)	95B 845 051 P	Rear window		1	-I7Q4/IQU0 IQV3/QV4/QV8 IVW1
		Use also:			
		000.043.303.19		1	
4	95B 845 571	Gasket Rear window		1	-IVW5
(4)	95B 845 571 A	Gasket Rear window		1	IVW5
5	000 043 303 19	Adhesive set window glazing window glazing		1	
6	000 043 205 37	Mixing tube Supplement set		X	

Illustration: 805-01

PORSCHE

Model: 95B **Model life 2014>>**

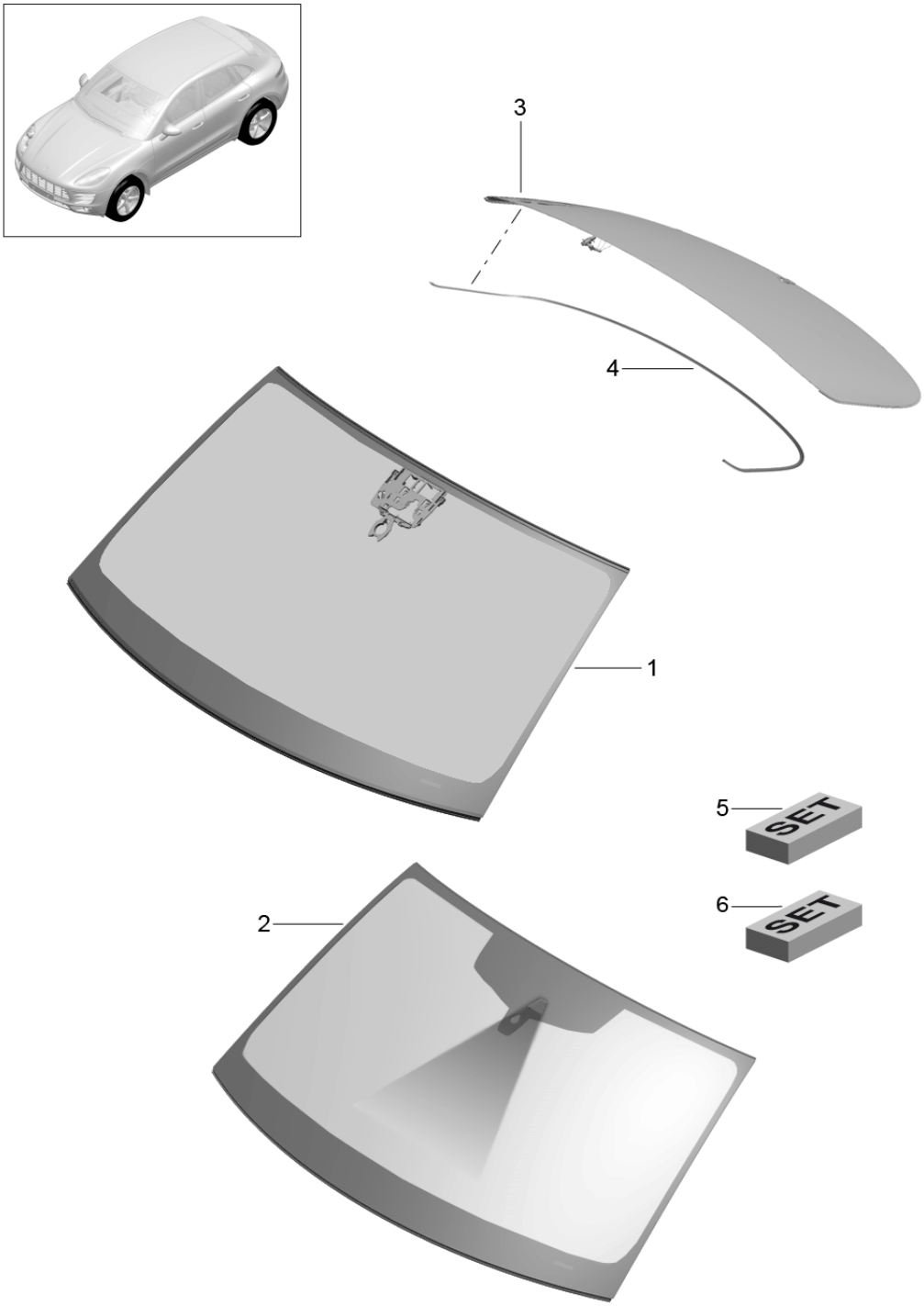

Model: 95B **Model life 2014>>**

Pos	Part Number	Description	Remark	Qty	Model
		window glazing	17-		
1	95B 845 099 JY	Windscreen without Camera Use also: 000.043.305.35		1 1	I4GC
(1)	95B 845 099 NY	Windscreen without Camera Use also: 000.043.305.35		1 1	I4GK
2	95B 845 099 MY	Windscreen with Camera Use also: 000.043.305.35		1 1	-IB0L/I4GC
(2)	95B 845 091 AY	Windscreen with Camera Use also: 000.043.305.35		1 1	IB0L/4GC
(2)	95B 845 099 QY	Windscreen with Camera Use also: 000.043.305.35		1 1	I4GK
3	95B 845 051 AN	Rear window Use also: 000.043.305.35		1 1	IVW1
(3)	95B 845 051 AG	Rear window Use also: 000.043.305.35		1 1	I4KC
(3)	95B 845 051 AJ	Rear window Use also: 000.043.305.35		1 1	I4KF
(3)	95B 845 051 AL	Rear window Use also: 000.043.305.35		1 1	IVW5
4	95B 845 571	Gasket Rear window		1	-IVW5
(4)	95B 845 571 A	Gasket Rear window		1	IVW5
5	000 043 305 35	Adhesive set window glazing		1	
6	000 043 205 37	Mixing tube Supplement set		X	

Illustration: 805-05

PORSCHE

Model: 95B **Model life 2014>>**

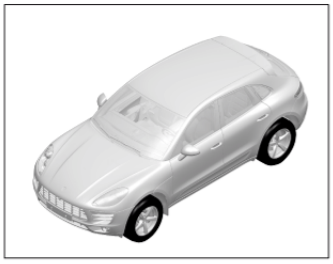

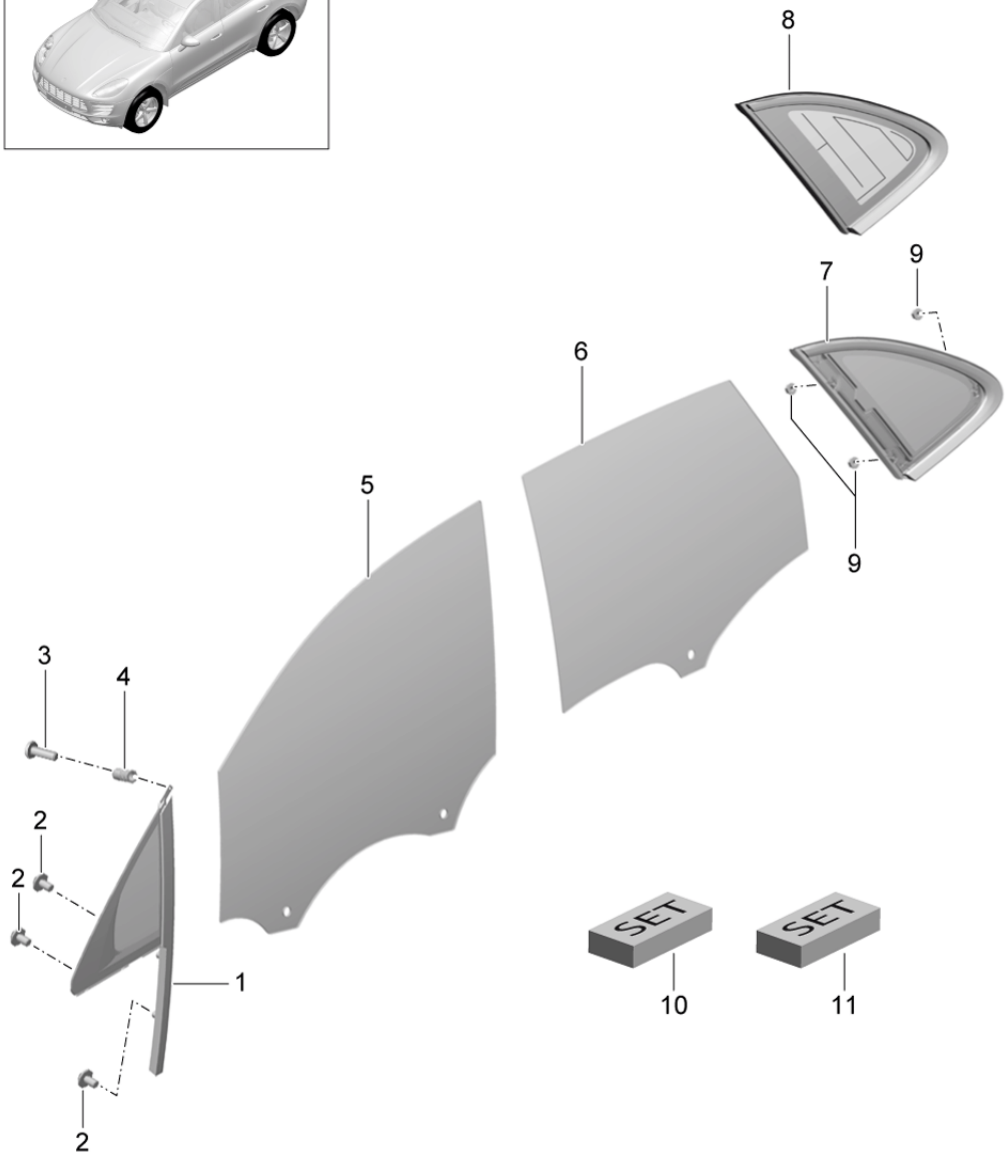

Model: 95B **Model life 2014>>**

Pos	Part Number	Description	Remark	Qty	Model
		window glazing	-16		
		Lateral			
		Triangular plate			
		Driver's side			
		Passenger's side			
1	95B 845 113 C	Washer	/L	1	IVW1/4KC/4KF
(1)	95B 845 114 C	Washer	/R	1	IVW1/4KC/4KF
(1)	95B 845 113 D	Washer	/L	1	IVW5
(1)	95B 845 114 D	Washer	/R	1	IVW5
2	N 106 538 01	Fastening screw		6	
		M5 X 8			
3	999 073 455 01	Screw		2	
		M5 X 16			
4	N 910 167 02	Blind rivet nut		2	
		M5			
		Side window			
		Doors			
		Front			
5	95B 845 201	Door window glass	/L	1	IVW1/4KC/4KF
(5)	95B 845 202	Door window glass	/R	1	IVW1/4KC/4KF
(5)	95B 845 201 A	Door window glass	/L	1	IVW5
(5)	95B 845 202 A	Door window glass	/R	1	IVW5
		Side window			
		Doors			
		Rear			
6	95B 845 205	Door window glass	/L	1	I4KC
(6)	95B 845 206	Door window glass	/R	1	I4KC
(6)	95B 845 205 A	Door window glass	/L	1	IVW1
(6)	95B 845 206 A	Door window glass	/R	1	IVW1
(6)	95B 845 205 B	Door window glass	/L	1	IVW5
(6)	95B 845 206 B	Door window glass	/R	1	IVW5
		Rear window			
		without			
		Antenna			
7	95B 845 297 DA	Rear window	/L	1	-I7Q4/IQJ2
					IQV0/QV3/QV4
					IQV8/4KC
		with			
		Moulding			
		Chrome look			
		Use also:			
		000.043.303.19		1	
(7)	95B 845 298 DA	Rear window	/R	1	-I7Q4/-I9M9
					IQJ2/QU0/QV0
					IQV3/QV4/QV8
					I4KC
		with			
		Moulding			
		Chrome look			
		Use also:			
		000.043.303.19		1	
(7)	95B 845 297 DB	Rear window	/L	1	-I7Q4/IQJ2
					IQV0/QV3/QV4
					IQV8/VW1
		with			
		Moulding			
		Chrome look			
		Use also:			
		000.043.303.19		1	
(7)	95B 845 298 DB	Rear window	/R	1	-I7Q4/-I9M9
					IQJ2/QU0/QV0
					IQV3/QV4/QV8
					IVW1

Model: 95B **Model life 2014>>**

Pos	Part Number	Description	Remark	Qty	Model
		with Moulding Chrome look Use also: 000.043.303.19		1	
(7)	95B 845 297 DC	Rear window	/L	1	-I7Q4/IQJ2 IQV0/QV3/QV4 IQV8/VW5
		with Moulding Chrome look Use also: 000.043.303.19		1	
(7)	95B 845 298 DC	Rear window	/R	1	-I7Q4/-I9M9 IQJ2/QU0/QV0 IQV3/QV4/QV8 IVW5
		with Moulding Chrome look Use also: 000.043.303.19		1	
(7)	95B 845 297 DD	Rear window	/L	1	-I7Q4/IQJ4 IQV0/QV3/QV4 IQV8/4KC
		with Moulding Black Use also: 000.043.303.19		1	
(7)	95B 845 298 DD	Rear window	/R	1	-I7Q4/-I9M9 IQJ4/QU0/QV0 IQV3/QV4/QV8 I4KC
		with Moulding Black Use also: 000.043.303.19		1	
(7)	95B 845 297 DE	Rear window	/L	1	-I7Q4/IQJ4 IQV0/QV3/QV4 IQV8/VW1
		with Moulding Black Use also: 000.043.303.19		1	
(7)	95B 845 298 DE	Rear window	/R	1	-I7Q4/-I9M9 IQJ4/QU0/QV0 IQV3/QV4/QV8 IVW1
		with Moulding Black Use also: 000.043.303.19		1	
(7)	95B 845 297 DF	Rear window	/L	1	-I7Q4/IQJ4 IQV0/QV3/QV4 IQV8/VW5
		with Moulding Black Use also:			

Model: 95B **Model life 2014>>**

Pos	Part Number	Description	Remark	Qty	Model
		000.043.303.19		1	
(7)	95B 845 298 DF	Rear window with Moulding Black Use also: 000.043.303.19	/R	1 1	-I7Q4/-I9M9 IQJ4/QU0/QV0 IQV3/QV4/QV8 IVW5
(7)	95B 845 297 DN	Rear window with Moulding Chrome look Use also: 000.043.303.19	/L	1 1	IQJ2/QV0/4KC I7Q4
(7)	95B 845 298 DN	Rear window with Moulding Chrome look Use also: 000.043.303.19	/R	1 1	IQJ2/QV0/4KC I7Q4
(7)	95B 845 297 DP	Rear window with Moulding Chrome look Use also: 000.043.303.19	/L	1 1	IQJ2/QV0/VW1 I7Q4
(7)	95B 845 298 DP	Rear window with Moulding Chrome look Use also: 000.043.303.19	/R	1 1	IQJ2/QV0/VW1 I7Q4
(7)	95B 845 297 DQ	Rear window with Moulding Chrome look Use also: 000.043.303.19	/L	1 1	IQJ2/QV0/VW5 I7Q4
(7)	95B 845 298 DQ	Rear window with Moulding Chrome look Use also: 000.043.303.19	/R	1 1	IQJ2/QV0/VW5 I7Q4
(7)	95B 845 297 DR	Rear window with Moulding Black Use also: 000.043.303.19	/L	1 1	IQJ4/QV0/4KC I7Q4
(7)	95B 845 298 DR	Rear window with Moulding	/R	1 1	IQJ4/QV0/4KC I7Q4

Model: 95B **Model life 2014>>**

Pos	Part Number	Description	Remark	Qty	Model
		Black Use also: 000.043.303.19		 1	
(7)	95B 845 297 DS	Rear window with Moulding Black Use also: 000.043.303.19	/L	1 1	IQJ4/QV0/VW1 I7Q4
(7)	95B 845 298 DS	Rear window with Moulding Black Use also: 000.043.303.19	/R	1 1	IQJ4/QV0/VW1 I7Q4
(7)	95B 845 297 DT	Rear window with Moulding Black Use also: 000.043.303.19	/L	1 1	IQJ4/QV0/VW5 I7Q4
(7)	95B 845 298 DT	Rear window with Moulding Black Use also: 000.043.303.19	/R	1 1	IQJ4/QV0/VW5 I7Q4
(7)	95B 845 297 EE	Rear window with Moulding Chrome look Use also: 000.043.303.19	/L	1 1	IQJ2/QV0/4KF I7Q4
(7)	95B 845 298 EE	Rear window with Moulding Chrome look Use also: 000.043.303.19	/R	1 1	IQJ2/QV0/4KF I7Q4
(7)	95B 845 297 EF	Rear window with Moulding Black Use also: 000.043.303.19	/L	1 1	IQJ4/QV0/4KF I7Q4
(7)	95B 845 298 EF	Rear window with Moulding Black Use also: 000.043.303.19	/R	1 1	IQJ4/QV0/4KF I7Q4
(7)	95B 845 297 EA	Rear window with	/L	1 1	-I7Q4/IQJ2 IQV0/QV3/QV4 IQV8/4KF

Model: 95B **Model life 2014>>**

Pos	Part Number	Description	Remark	Qty	Model
		Moulding Chrome look Use also: 000.043.303.19		1	
(7)	95B 845 298 EA	Rear window with Moulding Chrome look Use also: 000.043.303.19	/R	1 1	-I7Q4/-I9M9 IQJ2/QU0/QV0 IQV3/QV4/QV8 I4KF
(7)	95B 845 297 EB	Rear window with Moulding Black Use also: 000.043.303.19	/L	1 1	-I7Q4/IQJ4 IQV0/QV3/QV4 IQV8/4KF
(7)	95B 845 298 EB	Rear window with Moulding Black Use also: 000.043.303.19	/R	1 1	-I7Q4/-I9M9 IQJ4/QU0/QV0 IQV3/QV4/QV8 I4KF
(7)	95B 845 297 EG	Rear window with Moulding Black mat Use also: 000.043.303.19	/L	1 1	-I7Q4/IQJ6 IQV0/QV3/QV4 IQV8/4KC
(7)	95B 845 298 EG	Rear window with Moulding Black mat Use also: 000.043.303.19	/R	1 1	-I7Q4/-I9M9 IQJ6/QU0/QV0 IQV3/QV4/QV8 I4KC
(7)	95B 845 297 EH	Rear window with Moulding Black mat Use also: 000.043.303.19	/L	1 1	-I7Q4/IQJ6 IQV0/QV3/QV4 IQV8/VW1
(7)	95B 845 298 EH	Rear window with Moulding Black mat Use also:	/R	1 1	-I7Q4/-I9M9 IQJ6/QU0/QV0 IQV3/QV4/QV8 IVW1

Model: 95B **Model life 2014>>**

Pos	Part Number	Description	Remark	Qty	Model
		000.043.303.19		1	
(7)	95B 845 297 EJ	Rear window with Moulding Black mat Use also: 000.043.303.19	/L	1 1	-I7Q4/IQJ6 IQV0/QV3/QV4 IQV8/VW5
(7)	95B 845 298 EJ	Rear window with Moulding Black mat Use also: 000.043.303.19	/R	1 1	-I7Q4/-I9M9 IQJ6/QU0/QV0 IQV3/QV4/QV8 IVW5
(7)	95B 845 297 EK	Rear window with Moulding Black mat Use also: 000.043.303.19	/L	1 1	-I7Q4/IQJ6 IQV0/QV3/QV4 IQV8/4KF
(7)	95B 845 298 EK	Rear window with Moulding Black mat Use also: 000.043.303.19 Rear window with Antenna	/R	1 1 1	-I7Q4/-I9M9 IQJ6/QU0/QV0 IQV3/QV4/QV8 I4KF
8	95B 845 297 DG	Rear window with Moulding Chrome look Use also: 000.043.303.19	/L	1 1	IQJ2/QU0/QV1 IQV5/4KC
(8)	95B 845 298 DG	Rear window with Moulding Chrome look Use also: 000.043.303.19	/R	1 1	IQJ2/QV1/QV5 I4KC
(8)		Rear window with Moulding Chrome look Use also: 000.043.303.19	/R	1 1	IQJ2/4KC/9M9
(8)	95B 845 297 DH	Rear window with Moulding Chrome look	/L	1 	IQJ2/QU0/QV1 IQV5/VW1

Model: 95B **Model life 2014>>**

Pos	Part Number	Description	Remark	Qty	Model
		Use also:			
		000.043.303.19		1	
(8)	95B 845 298 DH	Rear window	/R	1	IQJ2/QV1/QV5
					IVW1
		with			
		Moulding			
		Chrome look			
		Use also:			
		000.043.303.19		1	
(8)		Rear window	/R	1	IQJ2/VW1/9M9
		with			
		Moulding			
		Chrome look			
		Use also:			
		000.043.303.19		1	
(8)	95B 845 297 DJ	Rear window	/L	1	IQJ2/QU0/QV1
					IQV5/VW5
		with			
		Moulding			
		Chrome look			
		Use also:			
		000.043.303.19		1	
(8)	95B 845 298 DJ	Rear window	/R	1	IQJ2/QV1/QV5
					IVW5
		with			
		Moulding			
		Chrome look			
		Use also:			
		000.043.303.19		1	
(8)		Rear window	/R	1	IQJ2/VW5/9M9
		with			
		Moulding			
		Chrome look			
		Use also:			
		000.043.303.19		1	
(8)	95B 845 297 DK	Rear window	/L	1	IQJ4/QU0/QV1
					IQV5/4KC
		with			
		Moulding			
		Black			
		Use also:			
		000.043.303.19		1	
(8)	95B 845 298 DK	Rear window	/R	1	IQJ4/QV1/QV5
					I4KC
		with			
		Moulding			
		Black			
		Use also:			
		000.043.303.19		1	
(8)		Rear window	/R	1	IQJ4/4KC/9M9
		with			
		Moulding			
		Black			
		Use also:			
		000.043.303.19		1	
(8)	95B 845 297 DL	Rear window	/L	1	IQJ4/QU0/QV1
					IQV5/VW1
		with			
		Moulding			
		Black			
		Use also:			
		000.043.303.19		1	
(8)	95B 845 298 DL	Rear window	/R	1	IQJ4/QV1/QV5

Model: 95B **Model life 2014>>**

Pos	Part Number	Description	Remark	Qty	Model
					IVW1
		with Moulding Black Use also: 000.043.303.19		1	
(8)		Rear window	/R	1	IQJ4/VW1/9M9
		with Moulding Black Use also: 000.043.303.19		1	
(8)	95B 845 297 DM	Rear window	/L	1	IQJ4/QU0/QV1 IQV5/VW5
		with Moulding Black Use also: 000.043.303.19		1	
(8)	95B 845 298 DM	Rear window	/R	1	IQJ4/QV1/QV5 IVW5
		with Moulding Black Use also: 000.043.303.19		1	
(8)		Rear window	/R	1	IQJ4/VW5/9M9
		with Moulding Black Use also: 000.043.303.19		1	
(8)	95B 845 297 EC	Rear window	/L	1	IQJ2/QU0/QV1 IQV5/4KF
		with Moulding Chrome look Use also: 000.043.303.19		1	
(8)	95B 845 298 EC	Rear window	/R	1	IQJ2/QV1/QV5 I4KF
		with Moulding Chrome look Use also: 000.043.303.19		1	
(8)		Rear window	/R	1	IQJ2/4KF/9M9
		with Moulding Chrome look Use also: 000.043.303.19		1	
(8)	95B 845 297 ED	Rear window	/L	1	IQJ4/QU0/QV1 IQV5/4KF
		with Moulding Black Use also: 000.043.303.19		1	
(8)	95B 845 298 ED	Rear window	/R	1	IQJ4/QV1/QV5 I4KF
		with Moulding			

Model: 95B **Model life 2014>>**

Pos	Part Number	Description	Remark	Qty	Model
		Black Use also: 000.043.303.19		 1	
(8)		Rear window with Moulding Black	/R	1	IQJ4/4KF/9M9
		Use also: 000.043.303.19		1	
(8)	95B 845 297 EL	Rear window with Moulding Black mat	/L	1	IQJ6/QU0/QV1 IQV5/4KC
		Use also: 000.043.303.19		1	
(8)	95B 845 298 EL	Rear window with Moulding Black mat	/R	1	IQJ6/QV1/QV5 I4KC
		Use also: 000.043.303.19		1	
(8)		Rear window with Moulding Black mat	/R	1	IQJ6/4KC/9M9
		Use also: 000.043.303.19		1	
(8)	95B 845 297 EM	Rear window with Moulding Black mat	/L	1	IQJ6/QU0/QV1 IQV5/VW1
		Use also: 000.043.303.19		1	
(8)	95B 845 298 EM	Rear window with Moulding Black mat	/R	1	IQJ6/QV1/QV5 IVW1
		Use also: 000.043.303.19		1	
(8)		Rear window with Moulding Black mat	/R	1	IQJ6/VW1/9M9
		Use also: 000.043.303.19		1	
(8)	95B 845 297 EN	Rear window with Moulding Black mat	/L	1	IQJ6/QU0/QV1 IQV5/VW5
		Use also: 000.043.303.19		1	
(8)	95B 845 298 EN	Rear window with Moulding Black mat	/R	1	IQJ6/QV1/QV5 IVW5
		Use also: 000.043.303.19		1	

Model: 95B **Model life 2014>>**

Pos	Part Number	Description	Remark	Qty	Model
(8)		Rear window with Moulding Black mat Use also: 000.043.303.19	/R	1 1	IQJ6/VW5/9M9
(8)	95B 845 297 EP	Rear window with Moulding Black mat Use also: 000.043.303.19	/L	1 1	IQJ6/QU0/QV1 IQV5/4KF
(8)	95B 845 298 EP	Rear window with Moulding Black mat Use also: 000.043.303.19	/R	1 1	IQJ6/QV1/QV5 I4KF
(8)		Rear window with Moulding Black mat Use also: 000.043.303.19	/R	1 1	IQJ6/4KF/9M9
(8)	95B 845 297 EQ	Rear window with Moulding Black mat Use also: 000.043.303.19	/L	1 1	IQJ6/4KC/7Q4
(8)	95B 845 298 EQ	Rear window with Moulding Black mat Use also: 000.043.303.19	/R	1 1	IQJ6/4KC/7Q4
(8)	95B 845 297 ER	Rear window with Moulding Black mat Use also: 000.043.303.19	/L	1 1	IQJ6/VW1/7Q4
(8)	95B 845 298 ER	Rear window with Moulding Black mat Use also: 000.043.303.19	/R	1 1	IQJ6/VW1/7Q4
(8)	95B 845 297 ES	Rear window with Moulding Black mat Use also: 000.043.303.19	/L	1 1	IQJ6/VW5/7Q4
(8)	95B 845 298 ES	Rear window with Moulding Black mat Use also: 000.043.303.19	/R	1 1	IQJ6/VW5/7Q4
(8)	95B 845 297 ET	Rear window	/L	1	IQJ6/4KF/7Q4

Model: 95B **Model life 2014>>**

Pos	Part Number	Description	Remark	Qty	Model
		with Moulding Black mat Use also: 000.043.303.19		 1	
(8)	95B 845 298 ET	Rear window with Moulding Black mat Use also: 000.043.303.19	/R	1 1	IQJ6/4KF/7Q4
9	N 015 082 10	Hexagon nut		6	
10	000 043 303 19	Adhesive set window glazing window glazing		1	
11	000 043 205 37	Mixing tube Supplement set		X	

Illustration: 805-06

PORSCHE

Model: 95B **Model life 2014>>**

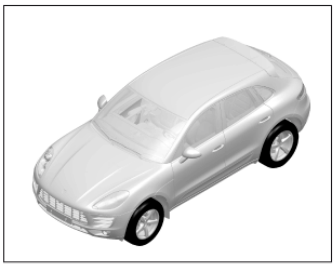

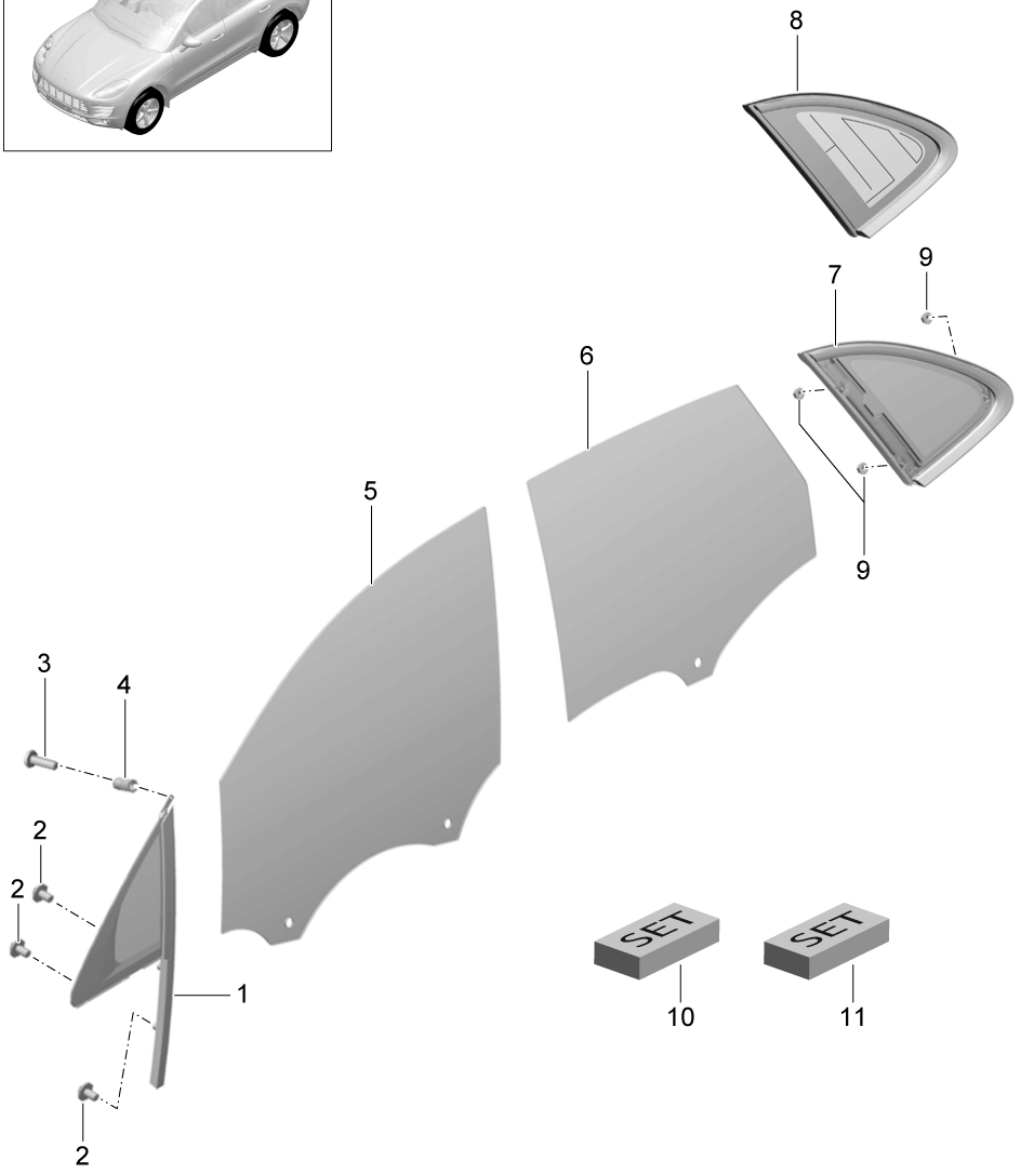

Model: 95B **Model life 2014>>**

Pos	Part Number	Description	Remark	Qty	Model
		window glazing	17-		
		Lateral			
		Triangular plate			
		Driver's side			
		Passenger's side			
1	95B 845 113 C	Washer	/L	1	IVW1/4KC/4KF
(1)	95B 845 114 C	Washer	/R	1	IVW1/4KC/4KF
(1)	95B 845 113 D	Washer	/L	1	IVW5
(1)	95B 845 114 D	Washer	/R	1	IVW5
2	N 106 538 01	Fastening screw		6	
		M5 X 8			
3	999 073 455 01	Screw		2	
		M5 X 16			
4	N 910 167 02	Blind rivet nut		2	
		M5			
		Side window			
		Doors			
		Front			
5	95B 845 201 B	Door window glass	/L	1	IVW1/4KC/4KF
(5)	95B 845 202 B	Door window glass	/R	1	IVW1/4KC/4KF
(5)	95B 845 201 A	Door window glass	/L	1	IVW5
(5)	95B 845 202 A	Door window glass	/R	1	IVW5
		Side window			
		Doors			
		Rear			
6	95B 845 205	Door window glass	/L	1	I4KC
(6)	95B 845 206	Door window glass	/R	1	I4KC
(6)	95B 845 205 A	Door window glass	/L	1	IVW1
(6)	95B 845 206 A	Door window glass	/R	1	IVW1
(6)	95B 845 205 B	Door window glass	/L	1	IVW5
(6)	95B 845 206 B	Door window glass	/R	1	IVW5
		Rear window			
		without			
		Antenna			
7	95B 845 297 FA	Rear window	/L	1	IQJ2/QU8/QV0
					I4KC
		with			
		Moulding			
		Chrome look			
		Use also:			
		000.043.305.35		1	
(7)	95B 845 298 FA	Rear window	/R	1	-I9M9/IQJ2
					IQU8/QV0/QV3
					I4KC
		with			
		Moulding			
		Chrome look			
		Use also:			
		000.043.305.35		1	
(7)	95B 845 297 FB	Rear window	/L	1	IQJ2/QU8/QV0
					IVW1
		with			
		Moulding			
		Chrome look			
		Use also:			
		000.043.305.35		1	
(7)	95B 845 298 FB	Rear window	/R	1	-I9M9/IQJ2
					IQU8/QV0/QV3
					IVW1
		with			
		Moulding			
		Chrome look			
		Use also:			

Model: 95B **Model life 2014>>**

Pos	Part Number	Description	Remark	Qty	Model
		000.043.305.35		1	
(7)	95B 845 297 FC	Rear window with Moulding Chrome look Use also: 000.043.305.35	/L	1 1	IQJ2/QU8/QV0 IVW5
(7)	95B 845 298 FC	Rear window with Moulding Chrome look Use also: 000.043.305.35	/R	1 1	-I9M9/IQJ2 IQU8/QV0/QV3 IVW5
(7)	95B 845 297 FD	Rear window with Moulding Black Use also: 000.043.305.35	/L	1 1	IQJ4/QU8/QV0 I4KC
(7)	95B 845 298 FD	Rear window with Moulding Black Use also: 000.043.305.35	/R	1 1	-I9M9/IQJ4 IQU8/QV0/QV3 I4KC
(7)	95B 845 297 FE	Rear window with Moulding Black Use also: 000.043.305.35	/L	1 1	IQJ4/QU8/QV0 IVW1
(7)	95B 845 298 FE	Rear window with Moulding Black Use also: 000.043.305.35	/R	1 1	-I9M9/IQJ4 IQU8/QV0/QV3 IVW1
(7)	95B 845 297 FF	Rear window with Moulding Black Use also: 000.043.305.35	/L	1 1	IQJ4/QU8/QV0 IVW5
(7)	95B 845 298 FF	Rear window with Moulding Black Use also: 000.043.305.35	/R	1 1	-I9M9/IQJ4 IQU8/QV0/QV3 IVW5
(7)	95B 845 297 GA	Rear window	/L	1	IQJ2/QU8/QV0 I4KF

Model: 95B **Model life 2014>>**

Pos	Part Number	Description	Remark	Qty	Model
		with Moulding Chrome look Use also: 000.043.305.35		1	
(7)	95B 845 298 GA	Rear window	/R	1	-I9M9/IQJ2 IQU8/QV0/QV3 I4KF
		with Moulding Chrome look Use also: 000.043.305.35		1	
(7)	95B 845 297 GB	Rear window	/L	1	IQJ4/QU8/QV0 I4KF
		with Moulding Black Use also: 000.043.305.35		1	
(7)	95B 845 298 GB	Rear window	/R	1	-I9M9/IQJ4 IQU8/QV0/QV3 I4KF
		with Moulding Black Use also: 000.043.305.35		1	
(7)	95B 845 297 GE	Rear window	/L	1	IQJ6/QU8/QV0 I4KC
		with Moulding Black mat Use also: 000.043.305.35		1	
(7)	95B 845 298 GE	Rear window	/R	1	-I9M9/IQJ6 IQU8/QV0/QV3 I4KC
		with Moulding Black mat Use also: 000.043.305.35		1	
(7)	95B 845 297 GF	Rear window	/L	1	IQJ6/QU8/QV0 IVW1
		with Moulding Black mat Use also: 000.043.305.35		1	
(7)	95B 845 298 GF	Rear window	/R	1	-I9M9/IQJ6 IQU8/QV0/QV3 IVW1
		with Moulding Black mat Use also: 000.043.305.35		1	
(7)	95B 845 297 GG	Rear window	/L	1	IQJ6/QU8/QV0 IVW5
		with Moulding Black mat			

Model: 95B **Model life 2014>>**

Pos	Part Number	Description	Remark	Qty	Model
		Use also:			
		000.043.305.35		1	
(7)	95B 845 298 GG	Rear window	/R	1	-I9M9/IQJ6 IQU8/QV0/QV3 IVW5
		with Moulding Black mat			
		Use also:			
		000.043.305.35		1	
(7)	95B 845 297 GH	Rear window	/L	1	IQJ6/QU8/QV0 I4KF
		with Moulding Black mat			
		Use also:			
		000.043.305.35		1	
(7)	95B 845 298 GH	Rear window	/R	1	-I9M9/IQJ6 IQU8/QV0/QV3 I4KF
		with Moulding Black mat			
		Use also:			
		000.043.305.35		1	
		Rear window with Antenna			
8	95B 845 297 FG	Rear window	/L	1	IQJ2/QU1/QV1 IQV3/4KC
		with Moulding Chrome look			
		Use also:			
		000.043.305.35		1	
(8)	95B 845 298 FG	Rear window	/R	1	IQJ2/QU1/QV1 I4KC
		with Moulding Chrome look			
		Use also:			
		000.043.305.35		1	
(8)		Rear window with Moulding Chrome look	/R	1	IQJ2/4KC/9M9
		Use also:			
		000.043.305.35		1	
(8)	95B 845 297 FH	Rear window	/L	1	IQJ2/QU1/QV1 IQV3/VW1
		with Moulding Chrome look			
		Use also:			
		000.043.305.35		1	
(8)	95B 845 298 FH	Rear window	/R	1	IQJ2/QU1/QV1 IVW1
		with Moulding Chrome look			
		Use also:			
		000.043.305.35		1	
(8)		Rear window	/R	1	IQJ2/VW1/9M9

Model: 95B **Model life 2014>>**

Pos	Part Number	Description	Remark	Qty	Model
		with Moulding Chrome look Use also: 000.043.305.35		1	
(8)	95B 845 297 FJ	Rear window with Moulding Chrome look Use also: 000.043.305.35	/L	1 1	IQJ2/QU1/QV1 IQV3/VW5
(8)	95B 845 298 FJ	Rear window with Moulding Chrome look Use also: 000.043.305.35	/R	1 1	IQJ2/QU1/QV1 IVW5
(8)		Rear window with Moulding Chrome look Use also: 000.043.305.35	/R	1 1	IQJ2/VW5/9M9
(8)	95B 845 297 FK	Rear window with Moulding Black Use also: 000.043.305.35	/L	1 1	IQJ4/QU1/QV1 IQV3/4KC
(8)	95B 845 298 FK	Rear window with Moulding Black Use also: 000.043.305.35	/R	1 1	IQJ4/QU1/QV1 I4KC
(8)		Rear window with Moulding Black Use also: 000.043.305.35	/R	1 1	IQJ4/4KC/9M9
(8)	95B 845 297 FL	Rear window with Moulding Black Use also: 000.043.305.35	/L	1 1	IQJ4/QU1/QV1 IQV3/VW1
(8)	95B 845 298 FL	Rear window with Moulding Black Use also: 000.043.305.35	/R	1 1	IQJ4/QU1/QV1 IVW1
(8)		Rear window with Moulding Black	/R	1 1	IQJ4/VW1/9M9

Model: 95B **Model life 2014>>**

Pos	Part Number	Description	Remark	Qty	Model
		Use also:			
		000.043.305.35		1	
(8)	95B 845 297 FM	Rear window	/L	1	IQJ4/QU1/QV1
					IQV3/VW5
		with			
		Moulding			
		Black			
		Use also:			
		000.043.305.35		1	
(8)	95B 845 298 FM	Rear window	/R	1	IQJ4/QU1/QV1
					IVW5
		with			
		Moulding			
		Black			
		Use also:			
		000.043.305.35		1	
(8)		Rear window	/R	1	IQJ4/VW5/9M9
		with			
		Moulding			
		Black			
		Use also:			
		000.043.305.35		1	
(8)	95B 845 297 GC	Rear window	/L	1	IQJ2/QU1/QV1
					IQV3/4KF
		with			
		Moulding			
		Chrome look			
		Use also:			
		000.043.305.35		1	
(8)	95B 845 298 GC	Rear window	/R	1	IQJ2/QU1/QV1
					I4KF
		with			
		Moulding			
		Chrome look			
		Use also:			
		000.043.305.35		1	
(8)		Rear window	/R	1	IQJ2/4KF/9M9
		with			
		Moulding			
		Chrome look			
		Use also:			
		000.043.305.35		1	
(8)	95B 845 297 GD	Rear window	/L	1	IQJ4/QU1/QV1
					IQV3/4KF
		with			
		Moulding			
		Black			
		Use also:			
		000.043.305.35		1	
(8)	95B 845 298 GD	Rear window	/R	1	IQJ4/QU1/QV1
					I4KF
		with			
		Moulding			
		Black			
		Use also:			
		000.043.305.35		1	
(8)		Rear window	/R	1	IQJ4/4KF/9M9
		with			
		Moulding			
		Black			
		Use also:			
		000.043.305.35		1	
(8)	95B 845 297 GJ	Rear window	/L	1	IQJ6/QU1/QV1

Model: 95B **Model life 2014>>**

Pos	Part Number	Description	Remark	Qty	Model
					IQV3/4KC
		with Moulding Black mat Use also: 000.043.305.35		1	
(8)	95B 845 298 GJ	Rear window	/R	1	IQJ6/QU1/QV1 I4KC
		with Moulding Black mat Use also: 000.043.305.35		1	
(8)		Rear window	/R	1	IQJ6/4KC/9M9
		with Moulding Black mat Use also: 000.043.305.35		1	
(8)	95B 845 297 GK	Rear window	/L	1	IQJ6/QU1/QV1 IQV3/VW1
		with Moulding Black mat Use also: 000.043.305.35		1	
(8)	95B 845 298 GK	Rear window	/R	1	IQJ6/QU1/QV1 IVW1
		with Moulding Black mat Use also: 000.043.305.35		1	
(8)		Rear window	/R	1	IQJ6/VW1/9M9
		with Moulding Black mat Use also: 000.043.305.35		1	
(8)	95B 845 297 GL	Rear window	/L	1	IQJ6/QU1/QV1 IQV3/VW5
		with Moulding Black mat Use also: 000.043.305.35		1	
(8)	95B 845 298 GL	Rear window	/R	1	IQJ6/QU1/QV1 IVW5
		with Moulding Black mat Use also: 000.043.305.35		1	
(8)		Rear window	/R	1	IQJ6/VW5/9M9
		with Moulding Black mat Use also: 000.043.305.35		1	
(8)	95B 845 297 GM	Rear window	/L	1	IQJ6/QU1/QV1 IQV3/4KF
		with Moulding			

Model: 95B **Model life 2014>>**

Pos	Part Number	Description	Remark	Qty	Model
		Black mat Use also: 000.043.305.35		 1	
(8)	95B 845 298 GM	Rear window with Moulding Black mat Use also: 000.043.305.35	/R	1	IQJ6/QU1/QV1 I4KF
(8)		Rear window with Moulding Black mat Use also: 000.043.305.35	/R	1 1	IQJ6/4KF/9M9
9	N 015 082 10	Hexagon nut		6	
10	000 043 305 35	Adhesive set window glazing		1	
11	000 043 205 37	Mixing tube Supplement set		X	

Illustration: 807-00

PORSCHE

Model: 95B **Model life 2014>>**

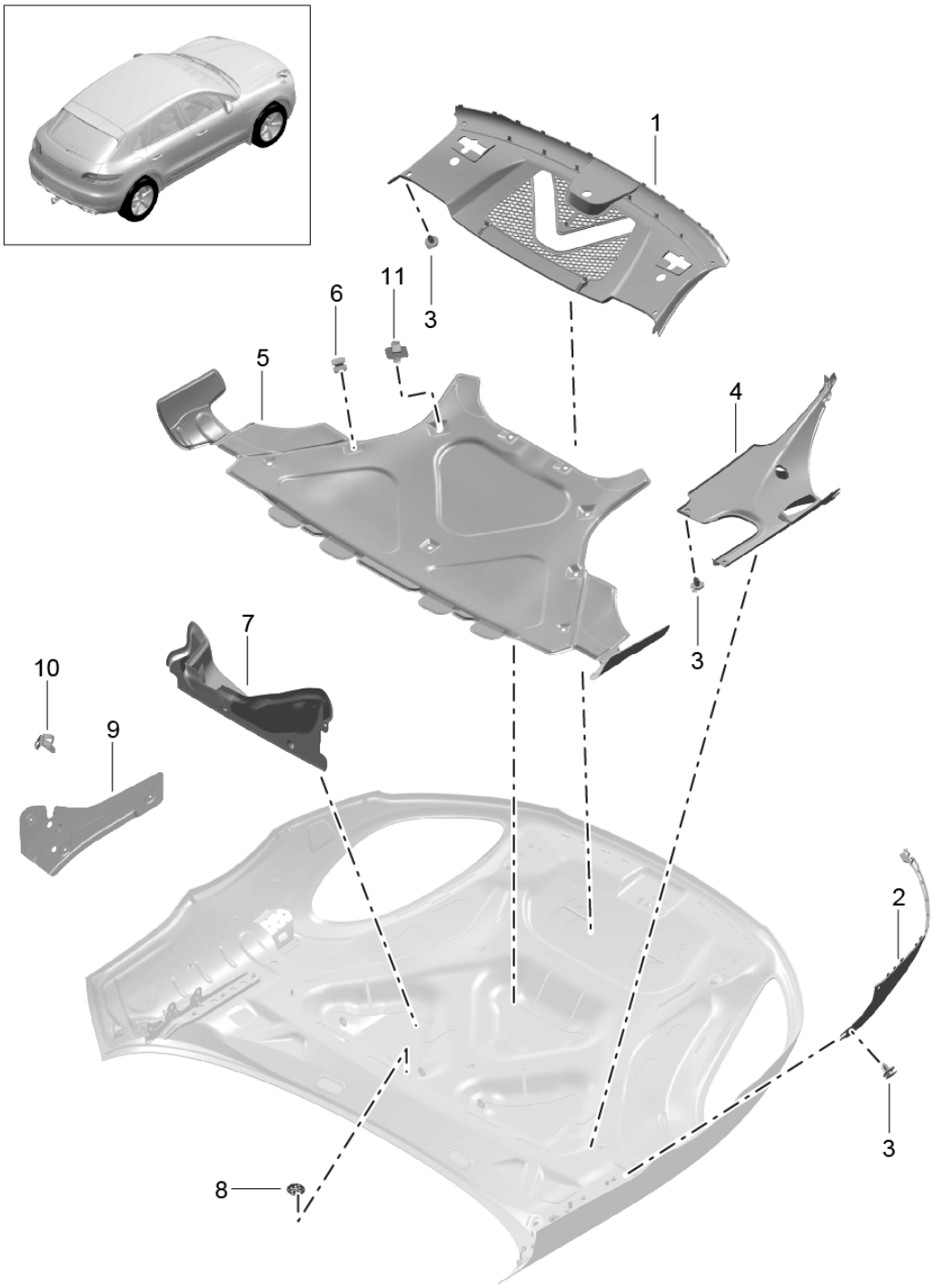

Model: 95B **Model life 2014>>**

Pos	Part Number	Description	Remark	Qty	Model
		Lining			
		Sound absorber			
		Cover			
		Engine compartment			
1	95B 805 806 G	Lining		1	IDU0/DU1
		Engine compartment			
		Lock			
	95B 805 806 G 1E0	Black			
(1)	95B 805 806 F	Lining		1	IDD7/DM0/D1V
					ID43/D51
		Engine compartment			
		Lock			
	95B 805 806 F 1E0	Black			
2	95B 807 173 A	Cover	/L	1	
		Headlamp			
	95B 807 173 A 1E0	Black			
(2)	95B 807 174 A	Cover	/R	1	
		Headlamp			
	95B 807 174 A 1E0	Black			
3	WHT 004 750	Expansion rivet	/L /R	1	
		Mount			
		Cover			
		Headlamp			
4	95B 806 583 B	Cover	/L	1	
		Engine compartment			
	95B 806 583 B 1E0	Black			
(4)	95B 806 584 B	Cover	/R	1	
		Engine compartment			
	95B 806 584 B 1E0	Black			
5	95B 863 831 A	Sound absorbing plate		1	
		Bonnet			
(5)	95B 863 831 B	Sound absorbing plate	15-	1	
		Bonnet			
(5)	95B 863 831 C	Sound absorbing plate	16-	1	
		Bonnet			
6	1T0 863 727	Retaining clip		1	
		Sound absorbing plate			
		Bonnet			
7	95B 863 829 A	Sound absorber		1	ITQ9/TW6/T8I
		Plenum panel			
		Engine compartment			
8	N 903 350 04	Clamping washer		6	
		Insulation			
		Plenum panel			
		Engine compartment			
9	95B 863 827 A	Insulation		1	ITW6
		Side member			
		Engine compartment			
10	8K0 863 203	Clip		1	
		Mount			
		Damper			
		Side member			
		Engine compartment			
11	95B 863 151	Expansion rivet		1	
		Sound absorbing plate			

Illustration: 807-10

PORSCHE

Model: 95B **Model life 2014>>**

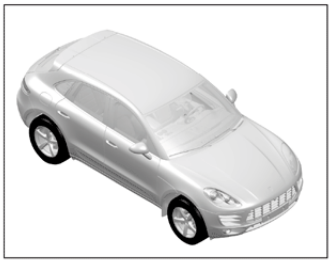

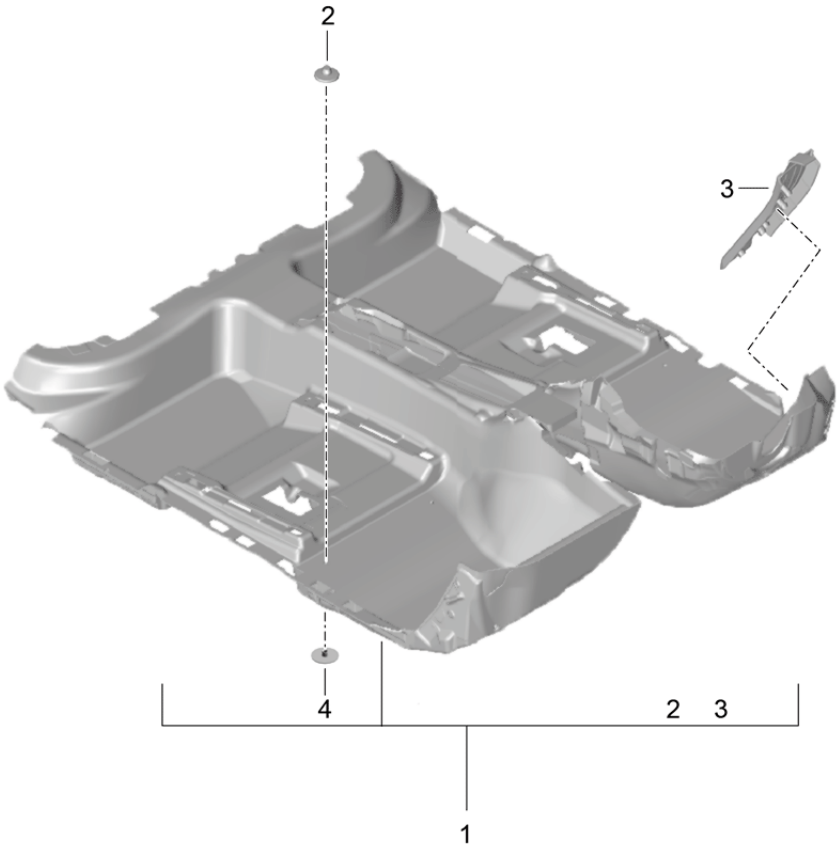

Model: 95B **Model life 2014>>**

Pos	Part Number	Description	Remark	Qty	Model
		Carpet			
		Cover			
		Foot support			
1	95B 863 021 F	Carpet		1	IL0L
		Passenger compartment			
	95B 863 021 F OS5	Black			+VC,+VJ,+VF,
					+VI,+VU,+VK,
					+VO,+VX,+VZ
	95B 863 021 F OQ3	Agate Grey			+VD,+VG,+VL,
					+VQ
	95B 863 021 F OR4	Luxor Beige			+VE,+VH,+VM
	95B 863 021 F OL7	Saddle Tan			+VN,+VP
	95B 863 021 F OT7	Espresso			+VR
(1)	95B 863 021 H	Carpet		1	IL0L
		Passenger compartment			
	95B 863 021 H OS5	Black			+VC,+VJ,+VF,
					+VI,+VU,+VK,
					+VO,+VX,+VZ
	95B 863 021 H OQ3	Agate Grey			+VD,+VG,+VL,
					+VQ
	95B 863 021 H OR4	Luxor Beige			+VE,+VH,+VM
	95B 863 021 H OL7	Saddle Tan			+VN,+VP
	95B 863 021 H OT7	Espresso			+VR
(1)	95B 863 021 G	Carpet		1	IL0R
		Passenger compartment			
	95B 863 021 G OS5	Black			+VC,+VJ,+VF,
					+VI,+VU,+VK,
					+VO,+VX,+VZ
	95B 863 021 G OQ3	Agate Grey			+VD,+VG,+VL,
					+VQ
	95B 863 021 G OR4	Luxor Beige			+VE,+VH,+VM
	95B 863 021 G OL7	Saddle Tan			+VN,+VP
	95B 863 021 G OT7	Espresso			+VR
2	8E0 864 229	Cap		1	
		Carpet			
		Passenger compartment			
	8E0 864 229 1E0	Black			+VC,+VJ,+VF,
					+VI,+VU,+VK,
					+VO,+VX+VZ
	8E0 864 229 OP1	Agate Grey			+VD,+VG,+VL,
					+VQ
	8E0 864 229 4H0	Luxor Beige			+VE,+VH,+VM,
3	95B 864 777	Cover		1	IL0L
		Foot support			
		Passenger compartment			
	95B 864 777 1E0	Black			
(3)	95B 864 777 A	Cover		1	IL0R
		Foot support			
		Passenger compartment			
	95B 864 777 A 1E0	Black			
(4)	955 551 227 02	Support		4	
		Carpet			

Illustration: 807-22

PORSCHE

Model: 95B **Model life 2014>>**

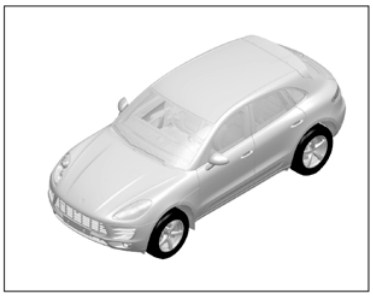

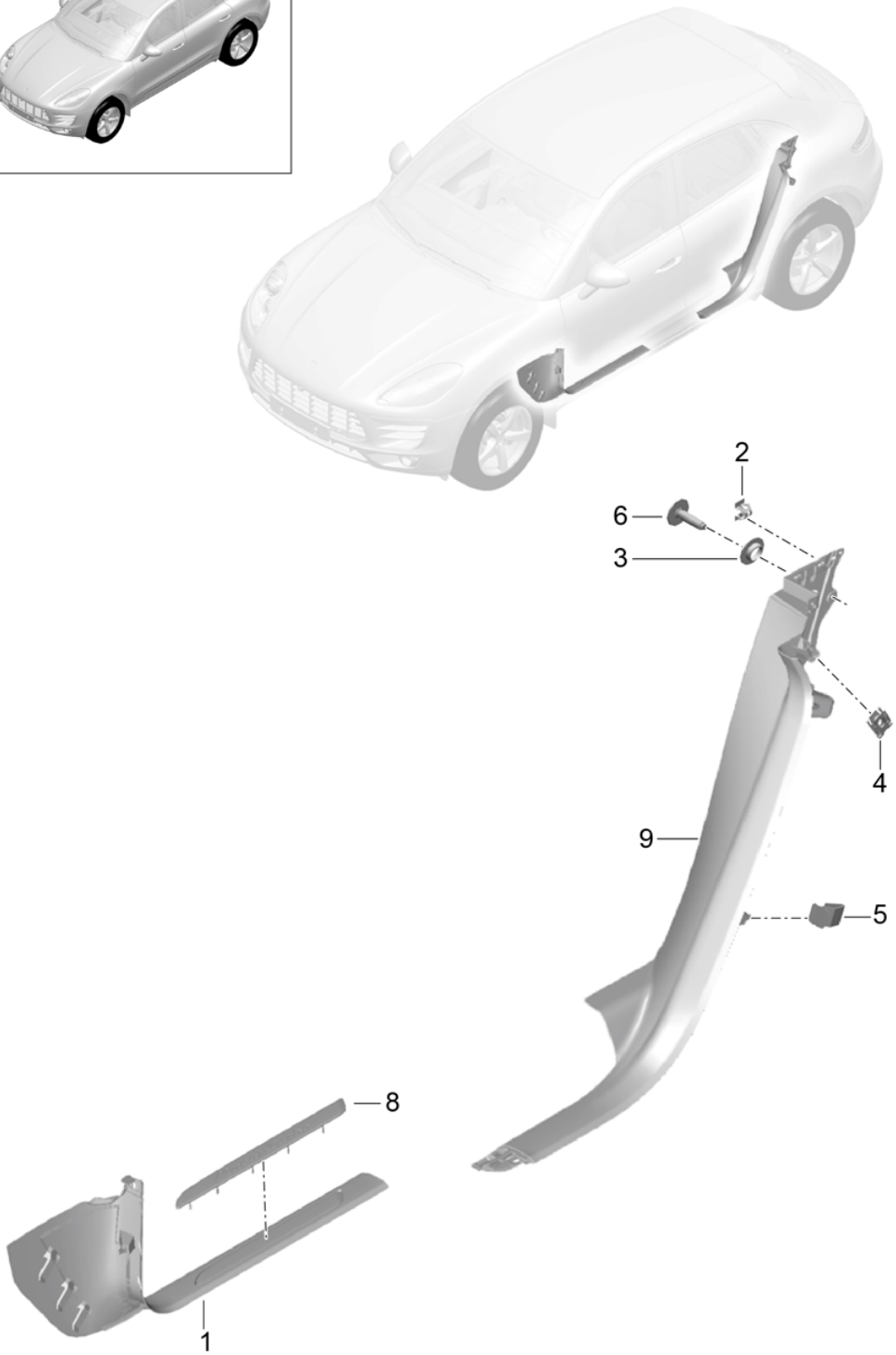

Model: 95B **Model life 2014>>**

Pos	Part Number	Description	Remark	Qty	Model
		Lining			
		Accessories			
		Lower			
		Scuff plate			
		Door sill			
		Inner			
1	95B 863 483 B	A-pillar	/L	1	IL0L/7M9
		Lining			
		Lower			
	95B 863 483 B 1E0	Black			+VC,+VJ,+VF, +VI,+VU,+VK, +VO
	95B 863 483 B OP1	Agate Grey			+VD,+VG,+VL
	95B 863 483 B 4H0	Luxor Beige			+VE,+VH,+VM, +VP,+VX,+VZ
	95B 863 483 B OM8	Saddle Tan			+VN
	95B 863 483 B OV4	Pebble Grey			+VQ
	95B 863 483 B 7N0	Espresso			+VR
(1)	95B 863 483 C	A-pillar	/L	1	IL0R/7M9
		Lining			
		Lower			
	95B 863 483 C 1E0	Black			+VC,+VJ,+VF, +VI,+VU,+VK, +VO,
	95B 863 483 C OP1	Agate Grey			+VD,+VG,+VL
	95B 863 483 C 4H0	Luxor Beige			+VE,+VH,+VM, +VP,+VX,+VZ
	95B 863 483 C OM8	Saddle Tan			+VN
	95B 863 483 C OV4	Pebble Grey			+VQ
	95B 863 483 C 7N0	Espresso			+VR
(1)	95B 863 484 B	A-pillar	/R	1	IL0L/7M9
		Lining			
		Lower			
	95B 863 484 B 1E0	Black			+VC,+VJ,+VF, +VI,+VU,+VK, +VO
	95B 863 484 B OP1	Agate Grey			+VD,+VG,+VL
	95B 863 484 B 4H0	Luxor Beige			+VE,+VH,+VM, +VP,+VX,+VZ
	95B 863 484 B OM8	Saddle Tan			+VN
	95B 863 484 B OV4	Pebble Grey			+VQ
	95B 863 484 B 7N0	Espresso			+VR
(1)	95B 863 484 C	A-pillar	/R	1	IL0R/7M9
		Lining			
		Lower			
	95B 863 484 C 1E0	Black			+VC,+VJ,+VF, +VI,+VU,+VK, +VO
	95B 863 484 C OP1	Agate Grey			+VD,+VG,+VL
	95B 863 484 C 4H0	Luxor Beige			+VE,+VH,+VM, +VP,+VX,+VZ
	95B 863 484 C OM8	Saddle Tan			+VN
	95B 863 484 C OV4	Pebble Grey			+VQ
	95B 863 484 C 7N0	Espresso			+VR
2	999 507 584 02	Clamp		X	
3	999 209 087 02	Spacer sleeve		X	
4	1K0 880 288 A	Clamp		X	
5	1Y0 867 276	Clip		X	
6	999 073 369 09	Oval-head screw		X	
		M5 X 18			
8	95B 853 467	Cover	/L	1	Macan IDM0/7M9
		Scuff plate			

Model: 95B **Model life 2014>>**

Pos	Part Number	Description	Remark	Qty	Model
(8)	95B 853 468	Macan Front Cover Scuff plate	/R	1	Macan IDM0/7M9
(8)	95B 853 467 A	Macan Front Cover Scuff plate	/L	1	Macan S IDD7/7M9
(8)		Macan Front Cover Scuff plate	/L	1	Macan S IDU0/7M9
(8)		Macan Front Cover Scuff plate	/L	1	Macan S ID43/7M9
(8)	95B 853 468 A	Macan Front Cover Scuff plate	/R	1	Macan S IDD7/7M9
(8)		Macan Front Cover Scuff plate	/R	1	Macan S IDU0/7M9
(8)		Macan Front Cover Scuff plate	/R	1	Macan S ID43/7M9
(8)	95B 853 467 D	Macan Front Cover Scuff plate	/L	1	Macan Turbo IDU1/7M9
(8)	95B 853 468 D	Macan Front Cover Scuff plate	/R	1	Macan Turbo IDU1/7M9
(8)	95B 853 467 N	Macan Front Cover Scuff plate	/L	1	Macan Turbo IDU1/7M8
(8)	95B 853 468 N	Macan Front Cover Scuff plate	/R	1	Macan Turbo IDU1/7M8
(8)	95B 853 467 P	Macan Front Cover Scuff plate	/L	1	Macan GTS ID4A/7M9
(8)		Macan Front Cover	/L	1	Macan GTS

Model: 95B **Model life 2014>>**

Pos	Part Number	Description	Remark	Qty	Model
					ID4A/7M9
		Scuff plate Macan Front			
(8)	95B 853 467 Q	Cover	/L	1	Macan GTS IE0W/VT2
		Scuff plate Macan Front Aluminium Illumination GTS			
(8)	95B 853 468 Q	Cover	/R	1	Macan GTS IE0W/VT2
		Scuff plate Macan Front Aluminium Illumination GTS			
(8)	95B 853 467 R	Cover	/L	1	Macan GTS IE0W/7M4
		Scuff plate Macan Front Carbon GTS			
(8)	95B 853 468 R	Cover	/R	1	Macan GTS IE0W/7M4
		Scuff plate Macan Front Carbon GTS			
(8)	95B 853 467 S	Cover	/L	1	Macan GTS IE0W/7M8
		Scuff plate Macan Front Carbon Illumination GTS			
(8)	95B 853 468 S	Cover	/R	1	Macan GTS IE0W/7M8
		Scuff plate Macan Front Carbon Illumination GTS			
9	95B 867 767 D	Lining Scuff plate Wheel housing Rear	/L	1	I4X3
	95B 867 767 D 1E0	Black			+VC,+VJ,+VF, +VI,+VU,+VK, +VO
	95B 867 767 D OP1	Agate Grey			+VD,+VG,+VL
	95B 867 767 D 4H0	Luxor Beige			+VE,+VH,+VM, +VP,+VX,+VZ
	95B 867 767 D OM8	Saddle Tan			+VN
	95B 867 767 D OV4	Pebble Grey			+VQ
	95B 867 767 D 7N0	Espresso			+VR

Model: 95B **Model life 2014>>**

Pos	Part Number	Description	Remark	Qty	Model
(9)	95B 867 767 E	Lining Scuff plate Wheel housing Rear	/L	1	I4X4
	95B 867 767 E 1E0	Black			+VC,+VJ,+VF, +VI,+VU,+VK, +VO
	95B 867 767 E OP1	Agate Grey			+VD,+VG,+VL
	95B 867 767 E 4H0	Luxor Beige			+VE,+VH,+VM, +VP,+VX,+VZ
	95B 867 767 E OM8	Saddle Tan			+VN
	95B 867 767 E OV4	Pebble Grey			+VQ
	95B 867 767 E 7N0	Espresso			+VR
(9)	95B 867 768 D	Lining Scuff plate Wheel housing Rear	/R	1	I4X3
	95B 867 768 D 1E0	Black			+VC,+VJ,+VF, +VI,+VU,+VK, +VO
	95B 867 768 D OP1	Agate Grey			+VD,+VG,+VL
	95B 867 768 D 4H0	Luxor Beige			+VE,+VH,+VM, +VP,+VX,+VZ
	95B 867 768 D OM8	Saddle Tan			+VN
	95B 867 768 D OV4	Pebble Grey			+VQ
	95B 867 768 D 7N0	Espresso			+VR
(9)	95B 867 768 E	Lining Scuff plate Wheel housing Rear	/R	1	I4X4
	95B 867 768 E 1E0	Black			+VC,+VJ,+VF, +VI,+VU,+VK, +VO
	95B 867 768 E OP1	Agate Grey			+VD,+VG,+VL
	95B 867 768 E 4H0	Luxor Beige			+VE,+VH,+VM, +VP,+VX,+VZ
	95B 867 768 E OM8	Saddle Tan			+VN
	95B 867 768 E OV4	Pebble Grey			+VQ
	95B 867 768 E 7N0	Espresso			+VR

Illustration: 807-23

PORSCHE

Model: 95B **Model life 2014>>**

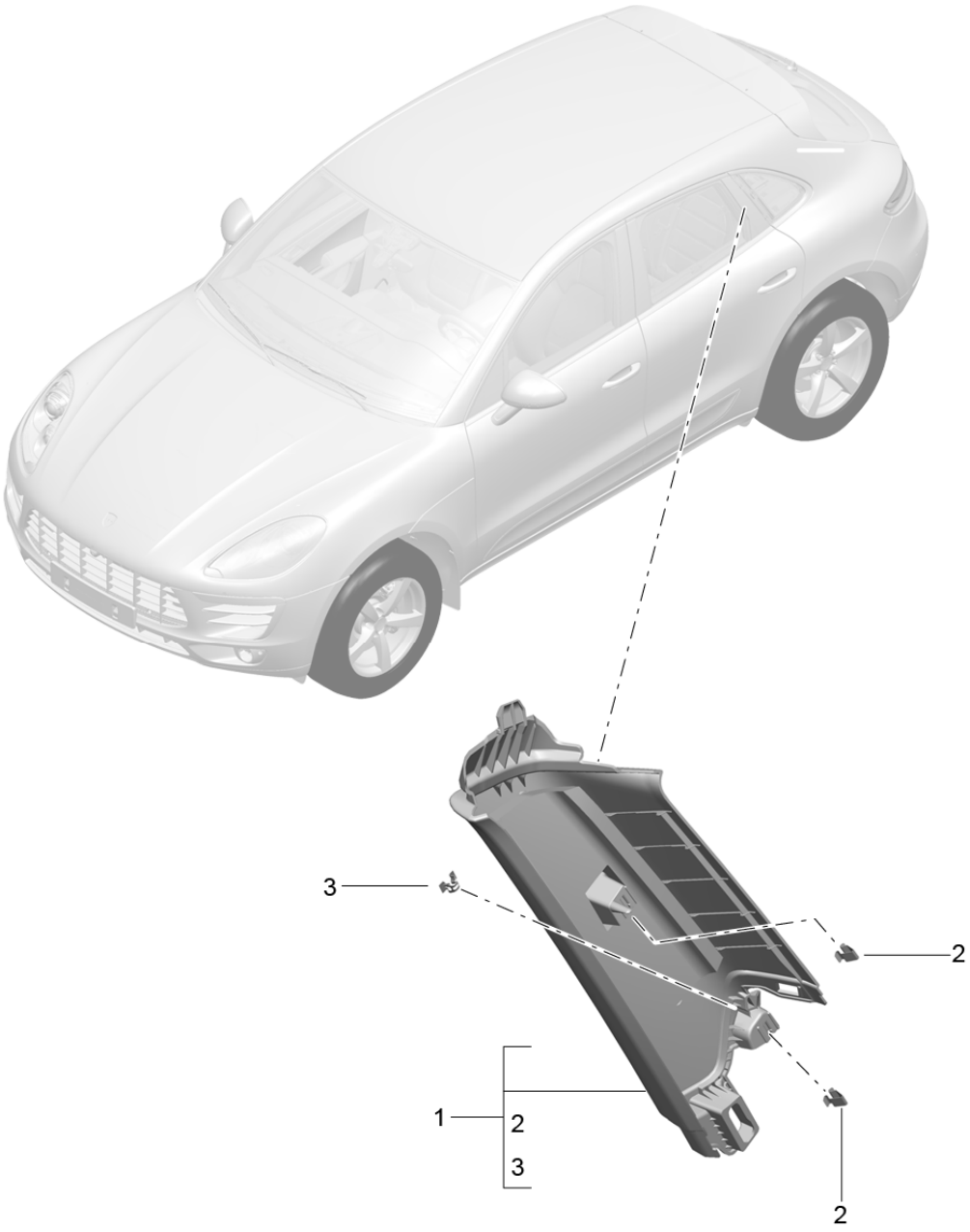

Model: 95B **Model life 2014>>**

Pos	Part Number	Description	Remark	Qty	Model
		Lining			
		C-pillar			
		Upper			
1	95B 867 287	Lining	/L	1	
		C-pillar			
	95B 867 287 1E0	Black			+VC,+VJ,+VF,
					+VI,+VU,+VK,
					+VO,+VX,+VZ
	95B 867 287 OP1	Agate Grey			+VD,+VG,+VL,
					+VQ
	95B 867 287 4H0	Luxor Beige			+VE,+VH,+VM
	95B 867 287 OM8	Saddle Tan			+VN,+VP
	95B 867 287 7N0	Espresso			+VR
(1)	95B 867 288	Lining	/R	1	
		C-pillar			
	95B 867 288 1E0	Black			+VC,+VJ,+VF,
					+VI,+VU,+VK,
					+VO,+VX,+VZ
	95B 867 288 OP1	Agate Grey			+VD,+VG,+VL,
					+VQ
	95B 867 288 4H0	Luxor Beige			+VE,+VH,+VM
	95B 867 288 OM8	Saddle Tan			+VN,+VP
	95B 867 288 7N0	Espresso			+VR
2	999 507 839 01	Clamp		2	
3	999 507 584 02	Clamp		1	

Illustration: 807-25

PORSCHE

Model: 95B **Model life 2014>>**

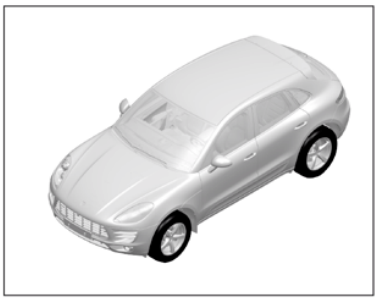

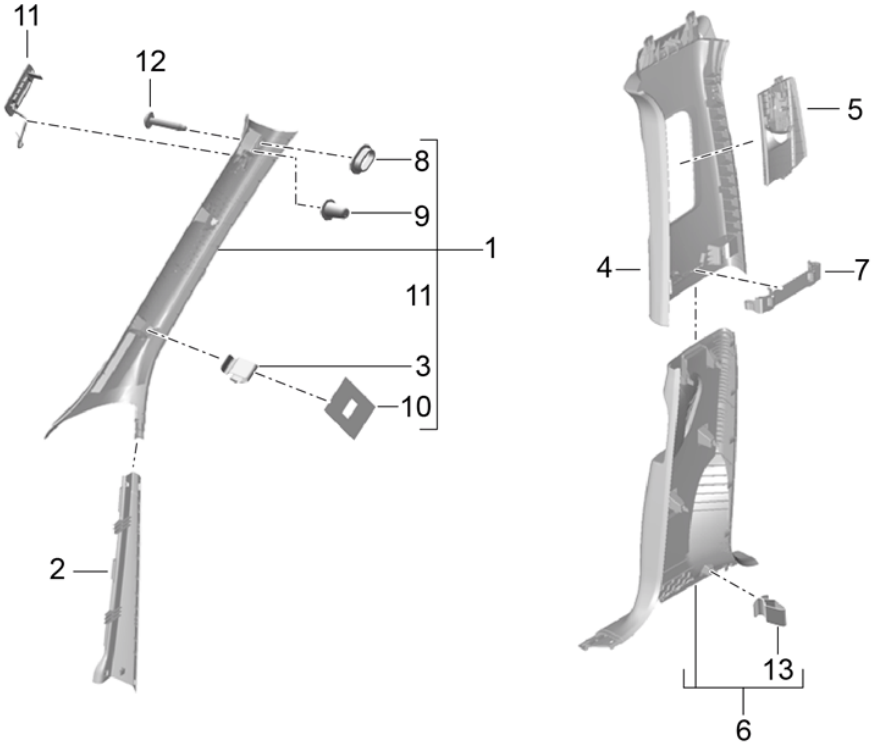

Model: 95B **Model life 2014>>**

Pos	Part Number	Description	Remark	Qty	Model
		A-pillar			
		B-pillar			
		Lining			
		Accessories			
		Upper			
1	95B 867 233 B	A-pillar	/L	1	I6NJ/6NQ
		Lining			
		Upper			
	95B 867 233 B 6F2	Black			+VC,+VJ,+VF, +VI,+VU,+VK, +VO,+VX,+VZ
	95B 867 233 B DR7	Agate Grey			+VD,+VG,+VL, +VQ
	95B 867 233 B 7F3	Luxor Beige			+VE,+VH,+VM
	95B 867 233 B CH6	Saddle Tan			+VN,+VP
	95B 867 233 B 4F7	Espresso			+VR
(1)	95B 867 233 C	A-pillar	/L	1	I6NA/6NN
		Lining			
		Upper			
	95B 867 233 C 2W0	Black			+VC,+VJ,+VF, +VI,+VU,+VK, +VO,+VX,+VZ
	95B 867 233 C OU5	Agate Grey			+VD,+VG,+VL, +VQ
	95B 867 233 C 9U1	Luxor Beige			+VE,+VH,+VM
	95B 867 233 C OP2	Saddle Tan			+VN,+VP
	95B 867 233 C 9U7	Espresso			+VR
(1)	95B 867 234 B	A-pillar	/R	1	I6NJ/6NQ
		Lining			
		Upper			
	95B 867 234 B 6F2	Black			+VC,+VJ,+VF, +VI,+VU,+VK, +VO,+VX,+VZ
	95B 867 234 B DR7	Agate Grey			+VD,+VG,+VL, +VQ
	95B 867 234 B 7F3	Luxor Beige			+VE,+VH,+VM
	95B 867 234 B CH6	Saddle Tan			+VN,+VP
	95B 867 234 B 4F7	Espresso			+VR
(1)	95B 867 234 C	A-pillar	/R	1	I6NA/6NN
		Lining			
		Upper			
	95B 867 234 C 2W0	Black			+VC,+VJ,+VF, +VI,+VU,+VK, +VO,+VX,+VZ
	95B 867 234 C OU5	Agate Grey			+VD,+VG,+VL, +VQ
	95B 867 234 C 9U1	Luxor Beige			+VE,+VH,+VM
	95B 867 234 C OP2	Saddle Tan			+VN,+VP
	95B 867 234 C 9U7	Espresso			+VR
2	95B 868 239	A-pillar	/L	1	
		Lining			
		Centre			
	95B 868 239 1E0	Black			+VC,+VJ,+VF, +VI,+VU,+VK, +VO
	95B 868 239 OP1	Agate Grey			+VD,+VG,+VL
	95B 868 239 4H0	Luxor Beige			+VE,+VH,+VM, +VP,+VX,+VZ
	95B 868 239 OM8	Saddle Tan			+VN
	95B 868 239 OV4	Pebble Grey			+VQ
	95B 868 239 7N0	Espresso			+VR
(2)	95B 868 240	A-pillar	/R	1	
		Lining			

Model: 95B **Model life 2014>>**

Pos	Part Number	Description	Remark	Qty	Model
		Centre			
	95B 868 240 1E0	Black			+VC,+VJ,+VF, +VI,+VU,+VK, +VO
	95B 868 240 OP1	Agate Grey			+VD,+VG,+VL
	95B 868 240 4H0	Luxor Beige			+VE,+VH,+VM, +VP,+VX,+VZ
	95B 868 240 OM8	Saddle Tan			+VN
	95B 868 240 OV4	Pebble Grey			+VQ
	95B 868 240 7N0	Espresso			+VR
3	999 507 839 01	Clamp		2	
4	95B 867 243	B-pillar Lining Upper	/L	1	I6NJ/6NQ
	95B 867 243 6F2	Black			+VC,+VJ,+VF, +VI,+VU,+VK, +VO,+VX,+VZ
	95B 867 243 DR7	Agate Grey			+VD,+VG,+VL, +VQ
	95B 867 243 7F3	Luxor Beige			+VE,+VH,+VM
	95B 867 243 CH6	Saddle Tan			+VN,+VP
	95B 867 243 4F7	Espresso			+VR
(4)	95B 867 244	B-pillar Lining Upper	/R	1	I6NJ/6NQ
	95B 867 244 6F2	Black			+VC,+VJ,+VF, +VI,+VU,+VK, +VO,+VX,+VZ
	95B 867 244 DR7	Agate Grey			+VD,+VG,+VL +VQ
	95B 867 244 7F3	Luxor Beige			+VE,+VH,+VM,
	95B 867 244 CH6	Saddle Tan			+VN,+VP
	95B 867 244 4F7	Espresso			+VR
(4)	95B 867 243 A	B-pillar Lining Upper	/L	1	I6NA/6NN
	95B 867 243 A 2W0	Black			+VC,+VJ,+VF, +VI,+VU,+VK, +VO,+VX,+VZ
	95B 867 243 A OU5	Agate Grey			+VD,+VG,+VL +VQ
	95B 867 243 A 9U1	Luxor Beige			+VE,+VH,+VM,
	95B 867 243 A OP2	Saddle Tan			+VN,+VP
	95B 867 243 A 9U7	Espresso			+VR
(4)	95B 867 244 A	B-pillar Lining Upper	/R	1	I6NA/6NN
	95B 867 244 A 2W0	Black			+VC,+VJ,+VF, +VI,+VU,+VK, +VO,+VX,+VZ
	95B 867 244 A OU5	Agate Grey			+VD,+VG,+VL +VQ
	95B 867 244 A 9U1	Luxor Beige			+VE,+VH,+VM,
	95B 867 244 A OP2	Saddle Tan			+VN,+VP
	95B 867 244 A 9U7	Espresso			+VR
5	95B 867 293	Slide Key Lining B-pillar Belt Upper	/L	1	
	95B 867 293 1E0	Black			+VC,+VJ,+VF, +VI,+VU,+VK,

Model: 95B **Model life 2014>>**

Pos	Part Number	Description	Remark	Qty	Model
					+VO,+VX,+VZ
	95B 867 293 OP1	Agate Grey			+VD,+VG,+VL,
					+VQ
	95B 867 293 4H0	Luxor Beige			+VE,+VH,+VM
	95B 867 293 OM8	Saddle Tan			+VN,+VP
	95B 867 293 7N0	Espresso			+VR
(5)	95B 867 294	Slide	/R	1	
		Key			
		Lining			
		B-pillar			
		Belt			
		Upper			
	95B 867 294 1E0	Black			+VC,+VJ,+VF,
					+VI,+VU,+VK,
					+VO,+VX,+VZ
	95B 867 294 OP1	Agate Grey			+VD,+VG,+VL
					+VQ
	95B 867 294 4H0	Luxor Beige			+VE,+VH,+VM
	95B 867 294 OM8	Saddle Tan			+VN,+VP
	95B 867 294 7N0	Espresso			+VR
6	95B 867 239	B-pillar	/L	1	I7AA/7AB/7AC
					I7AK/7AL
		Lining			I7AB/7AC/7AK
					I7AL
		Lower			
	95B 867 239 1E0	Black			+VC,+VJ,+VF,
					+VI,+VU,+VK,
					+VO
	95B 867 239 OP1	Agate Grey			+VD,+VG,+VL
	95B 867 239 4H0	Luxor Beige			+VE,+VH,+VM,
					+VP,+VX,+VZ
	95B 867 239 OM8	Saddle Tan			+VN
	95B 867 239 OV4	Pebble Grey			+VQ
	95B 867 239 7N0	Espresso			+VR
(6)	95B 867 239 A	B-pillar	/L	1	I7AH
		Lining			
		Lower			
	95B 867 239 A 1E0	Black			+VC,+VJ,+VF,
					+VI,+VU,+VK,
					+VO,+VX,+VZ
	95B 867 239 A OP1	Agate Grey			+VD,+VG,+VL
	95B 867 239 A 4H0	Luxor Beige			+VE,+VH,+VM,
					+VP
	95B 867 239 A OM8	Saddle Tan			+VN
	95B 867 239 A OV4	Pebble Grey			+VQ
	95B 867 239 A 7N0	Espresso			+VR
(6)	95B 867 240	B-pillar	/R	1	
		Lining			
		Lower			
	95B 867 240 1E0	Black			+VC,+VJ,+VF,
					+VI,+VU,+VK,
					+VO,+VX,+VZ
	95B 867 240 OP1	Agate Grey			+VD,+VG,+VL
	95B 867 240 4H0	Luxor Beige			+VE,+VH,+VM,
					+VP
	95B 867 240 OM8	Saddle Tan			+VN
	95B 867 240 OV4	Pebble Grey			+VQ
	95B 867 240 7N0	Espresso			+VR
7	95B 867 191	Support	/L	1	
		B-pillar			
		Lining			
(7)	95B 867 192	Support	/R	1	
		B-pillar			

Model: 95B **Model life 2014>>**

Pos	Part Number	Description	Remark	Qty	Model
		Lining			
8	9A7 867 144 00	Bush		1	
9	997 555 857 00	Grommet		1	
10	999 209 084 40	Spacer		2	
11	95B 868 171	Cap	/L	1	
		Airbag			
	95B 868 171 1E0	Black			+VC,+VX,+VF +VI,+VU,+VZ +VK,+VO
	95B 868 171 OP1	Agate Grey			+VD,+VG,+VL +VQ
	95B 868 171 4H0	Luxor Beige			+VE,+VH,+VM
	95B 868 171 OM8	Saddle Tan			+VN,+VP
	95B 868 171 7N0	Espresso			+VR
(11)	95B 868 172	Cap	/R	1	
		Airbag			
	95B 868 172 1E0	Black			+VC,+VX,+VF +VI,+VU,+VZ +VK,+VO
	95B 868 172 OP1	Agate Grey			+VD,+VG,+VL +VQ
	95B 868 172 4H0	Luxor Beige			+VE,+VH,+VM
	95B 868 172 OM8	Saddle Tan			+VN,+VP
	95B 868 172 7N0	Espresso			+VR
12	N 106 768 01	Screw		2	
13	1Y0 867 276	Clip		7	

Illustration: 807-30

PORSCHE

Model: 95B **Model life 2014>>**

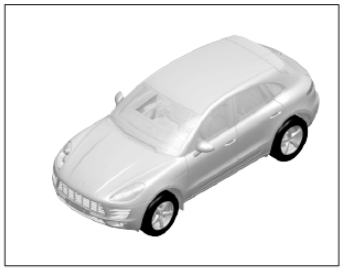

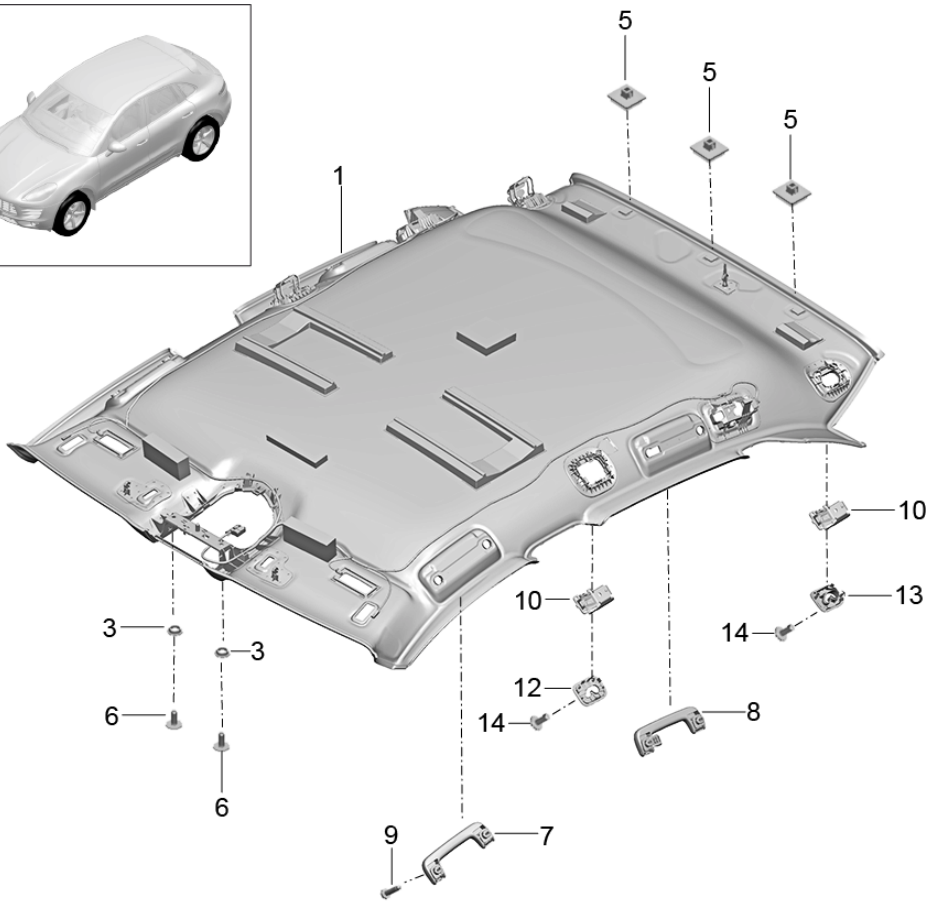

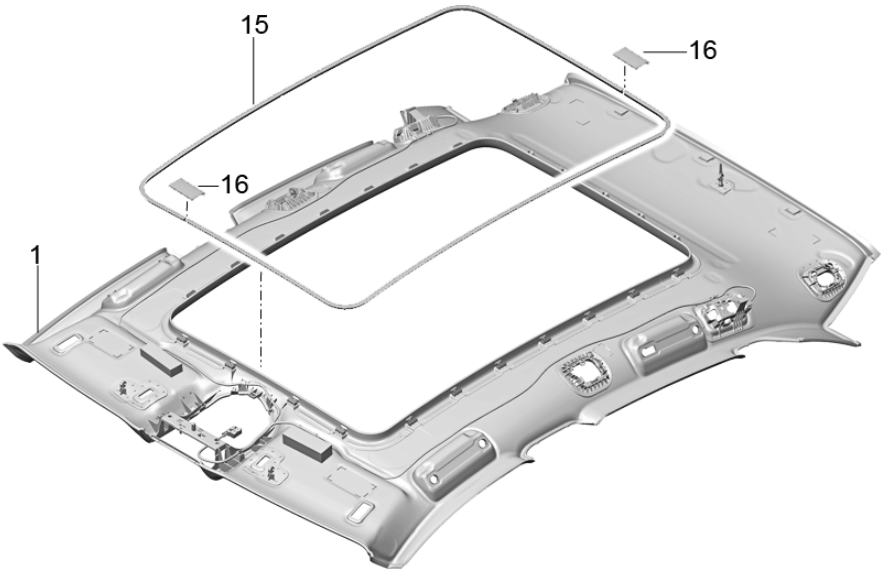

Model: 95B **Model life 2014>>**

Pos	Part Number	Description	Remark	Qty	Model
		Rooflining And Accessories			
1	95B 867 501 BK	Rooflining		1	I3CU/3CX/3FA I6NJ/9MB
		Cloth			
	95B 867 501 BK 6F2	Black			+VC,+VJ,+VF, +VI,+VU,+VK, +VO,+VX,+VZ
	95B 867 501 BK DR7	Agate Grey			+VD,+VG,+VL, +VQ
	95B 867 501 BK 7F3	Luxor Beige			+VE,+VH,+VM
	95B 867 501 BK CH6	Saddle Tan	15-		+VN,+VP
	95B 867 501 BK 4F7	Espresso	15-		+VR
1	95B 867 501 BT	Rooflining		1	I3CU/3CX/3FU I6NJ/9MA
		Cloth			
	95B 867 501 BT 6F2	Black			+VC,+VJ,+VF, +VI,+VU,+VK, +VO,+VX,+VZ
	95B 867 501 BT DR7	Agate Grey			+VD,+VG,+VL, +VQ
	95B 867 501 BT 7F3	Luxor Beige			+VE,+VH,+VM
	95B 867 501 BT CH6	Saddle Tan	15-		+VN,+VP
	95B 867 501 BT 4F7	Espresso	15-		+VR
(1)	95B 867 501 AB	Rooflining		1	I3CA/3FA/6NJ I9MA
		Cloth			
	95B 867 501 AB 6F2	Black			+VC,+VJ,+VF, +VI,+VU,+VK, +VO,+VX,+VZ
	95B 867 501 AB DR7	Agate Grey			+VD,+VG,+VL, +VQ
	95B 867 501 AB 7F3	Luxor Beige			+VE,+VH,+VM
	95B 867 501 AB CH6	Saddle Tan	15-		+VN,+VP
	95B 867 501 AB 4F7	Espresso	15-		+VR
(1)	95B 867 501 AD	Rooflining		1	I3CA/3FU/6NJ I9MA
		Cloth			
	95B 867 501 AD 6F2	Black			+VC,+VJ,+VF, +VI,+VU,+VK, +VO,+VX,+VZ
	95B 867 501 AD DR7	Agate Grey			+VD,+VG,+VL, +VQ
	95B 867 501 AD 7F3	Luxor Beige			+VE,+VH,+VM
	95B 867 501 AD CH6	Saddle Tan	15-		+VN,+VP
	95B 867 501 AD 4F7	Espresso	15-		+VR
(1)	95B 867 501 AF	Rooflining		1	I3CU/3CX/3FA I6NJ/9MA
		Cloth			
	95B 867 501 AF 6F2	Black			+VC,+VJ,+VF, +VI,+VU,+VK, +VO
	95B 867 501 AF DR7	Agate Grey			+VD,+VG,+VL, +VQ
	95B 867 501 AF 7F3	Luxor Beige			+VE,+VH,+VM
	95B 867 501 AF CH6	Saddle Tan	15-		+VN,+VP
	95B 867 501 AF 4F7	Espresso	15-		+VR
(1)	95B 867 501 CD	Rooflining		1	I3CU/3CX/3FU I6NJ/9MB
		Cloth			
	95B 867 501 CD 6F2	Black			+VC,+VJ,+VF, +VI,+VU,+VK,

Model: 95B **Model life 2014>>**

Pos	Part Number	Description	Remark	Qty	Model
					+VO,+VX,+VZ
	95B 867 501 CD DR7	Agate Grey			+VD,+VG,+VL,
					+VQ
	95B 867 501 CD 7F3	Luxor Beige			+VE,+VH,+VM
	95B 867 501 CD CH6	Saddle Tan	15-		+VN,+VP
	95B 867 501 CD 4F7	Espresso	15-		+VR
(1)	95B 867 501 R	Rooflining		1	I3CA/3FA/6NJ
					I9MB
		Cloth			
	95B 867 501 R 6F2	Black			+VC,+VJ,+VF,
					+VI,+VU,+VK,
					+VO,+VX,+VZ
	95B 867 501 R DR7	Agate Grey			+VD,+VG,+VL,
					+VQ
	95B 867 501 R 7F3	Luxor Beige			+VE,+VH,+VM
	95B 867 501 R CH6	Saddle Tan	15-		+VN,+VP
	95B 867 501 R 4F7	Espresso	15-		+VR
(1)	95B 867 501 T	Rooflining		1	I3CA/3FU/6NJ
					I9MB
		Cloth			
	95B 867 501 T 6F2	Black			+VC,+VJ,+VF,
					+VI,+VU,+VK,
					+VO,+VX,+VZ
	95B 867 501 T DR7	Agate Grey			+VD,+VG,+VL,
					+VQ
	95B 867 501 T 7F3	Luxor Beige			+VE,+VH,+VM
	95B 867 501 T CH6	Saddle Tan	15-		+VN,+VP
	95B 867 501 T 4F7	Espresso	15-		+VR
(1)	95B 867 501 BL	Rooflining		1	I3CU/3CX/3FA
					I6NN/9MB
		Alcantara			
	95B 867 501 BL 2W0	Black			+VC,+VJ,+VF,
					+VI,+VU,+VK,
					+VO,+VX,+VZ
	95B 867 501 BL OU5	Agate Grey			+VD,+VG,+VL,
					+VQ
	95B 867 501 BL 9U1	Luxor Beige			+VE,+VH,+VM
	95B 867 501 BL OP2	Saddle Tan	15-		+VN,+VP
	95B 867 501 BL 9U7	Espresso	15-		+VR
(1)	95B 867 501 AA	Rooflining		1	I3CA/3FU/6NN
					I9MB
		Alcantara			
	95B 867 501 AA 2W0	Black			+VC,+VJ,+VF,
					+VI,+VU,+VK,
					+VO,+VX,+VZ
	95B 867 501 AA OU5	Agate Grey			+VD,+VG,+VL,
					+VQ
	95B 867 501 AA 9U1	Luxor Beige			+VE,+VH,+VM
	95B 867 501 AA OP2	Saddle Tan	15-		+VN,+VP
	95B 867 501 AA 9U7	Espresso	15-		+VR
(1)	95B 867 501 AC	Rooflining		1	I3CA/3FA/6NN
					I9MA
		Alcantara			
	95B 867 501 AC 2W0	Black			+VC,+VJ,+VF,
					+VI,+VU,+VK,
					+VO,+VX,+VZ
	95B 867 501 AC OU5	Agate Grey			+VD,+VG,+VL,
					+VQ
	95B 867 501 AC 9U1	Luxor Beige			+VE,+VH,+VM
	95B 867 501 AC OP2	Saddle Tan	15-		+VN,+VP
	95B 867 501 AC 9U7	Espresso	15-		+VR
(1)	95B 867 501 AE	Rooflining		1	I3CA/3FU/6NN
					I9MA

Model: 95B **Model life 2014>>**

Pos	Part Number	Description	Remark	Qty	Model
		Alcantara			
	95B 867 501 AE 2W0	Black			+VC,+VJ,+VF, +VI,+VU,+VK, +VO,+VX,+VZ
	95B 867 501 AE OU5	Agate Grey			+VD,+VG,+VL, +VQ
	95B 867 501 AE 9U1	Luxor Beige			+VE,+VH,+VM
	95B 867 501 AE OP2	Saddle Tan	15-		+VN,+VP
	95B 867 501 AE 9U7	Espresso	15-		+VR
(1)	95B 867 501 AG	Rooflining		1	I3CU/3CX/3FA I6NN/9MA
		Alcantara			
	95B 867 501 AG 2W0	Black			+VC,+VJ,+VF, +VI,+VU,+VK, +VO
	95B 867 501 AG OU5	Agate Grey			+VD,+VG,+VL, +VQ
	95B 867 501 AG 9U1	Luxor Beige			+VE,+VH,+VM
(1)	95B 867 501 BG	Rooflining		1	I3CU/3CX/3FA I6NN/9MA
		Alcantara			
	95B 867 501 BG 2W0	Black			+VC,+VJ,+VF, +VI,+VU,+VK, +VO,+VX,+VZ
	95B 867 501 BG OU5	Agate Grey			+VD,+VG,+VL, +VQ
	95B 867 501 BG 9U1	Luxor Beige			+VE,+VH,+VM
	95B 867 501 BG OP2	Saddle Tan	15-		+VN,+VP
	95B 867 501 BG 9U7	Espresso	15-		+VR
(1)	95B 867 501 CA	Rooflining		1	I3CU/3CX/3FU I6NN/9MA
		Alcantara			
	95B 867 501 CA 2W0	Black			+VC,+VJ,+VF, +VI,+VU,+VK, +VO,+VX,+VZ
	95B 867 501 CA OU5	Agate Grey			+VD,+VG,+VL, +VQ
	95B 867 501 CA 9U1	Luxor Beige			+VE,+VH,+VM
	95B 867 501 CA OP2	Saddle Tan	15-		+VN,+VP
	95B 867 501 CA 9U7	Espresso	15-		+VR
(1)	95B 867 501 CE	Rooflining		1	I3CU/3CX/3FU I6NN/9MB
		Alcantara			
	95B 867 501 CE 2W0	Black			+VC,+VJ,+VF, +VI,+VU,+VK, +VO
	95B 867 501 CE OU5	Agate Grey			+VD,+VG,+VL, +VQ
	95B 867 501 CE 9U1	Luxor Beige			+VE,+VH,+VM
	95B 867 501 CE OP2	Saddle Tan	15-		+VN,+VP
	95B 867 501 CE 9U7	Espresso	15-		+VR
(1)	95B 867 501 S	Rooflining		1	I3CA/3FA/6NN I9MB
		Alcantara			
	95B 867 501 S 2W0	Black			+VC,+VJ,+VF, +VI,+VU,+VK, +VO,+VX,+VZ
	95B 867 501 S OU5	Agate Grey			+VD,+VG,+VL, +VQ
	95B 867 501 S 9U1	Luxor Beige			+VE,+VH,+VM
	95B 867 501 S OP2	Saddle Tan	15-		+VN,+VP
	95B 867 501 S 9U7	Espresso	15-		+VR
		Mount			

Model: 95B **Model life 2014>>**

Pos	Part Number	Description	Remark	Qty	Model
		Roofliner			
2	958 555 289 00	Retaining clip		X	
3	999 209 095 01	Spacer sleeve		2	
4	7D0 971 790	Foam part		2	I9MB
		Pipe			
5	7PP 867 300	Velcro fastener		3	
6	999 073 250 09	Oval-head screw		2	
		M5 X 15			
		Accessories			
7	95B 857 607	Grab handle		2	
		Front			
		without			
		Coat hook			
	95B 857 607 1E0	Black			+VC,+VJ,+VF,
					+VI,+VU,+VK,
					+VO,+VX,+VZ
	95B 857 607 OP1	Agate Grey			+VD,+VG,+VL
					+VQ
	95B 857 607 4H0	Luxor Beige			+VE,+VH,+VM
	95B 857 607 OM8	Saddle Tan	15-		+VN,+VP
	95B 857 607 7N0	Espresso	15-		+VR
8	95B 857 643	Grab handle	/L	1	
		Rear			
		with			
		Coat hook			
	95B 857 643 1E0	Black			+VC,+VJ,+VF,
					+VI,+VU,+VK,
					+VO,+VX,+VZ
	95B 857 643 OP1	Agate Grey			+VD,+VG,+VL
					+VQ
	95B 857 643 4H0	Luxor Beige			+VE,+VH,+VM
	95B 857 643 OM8	Saddle Tan	15-		+VN,+VP
	95B 857 643 7N0	Espresso	15-		+VR
(8)	95B 857 644	Grab handle	/R	1	
		Rear			
		with			
		Coat hook			
	95B 857 644 1E0	Black			+VC,+VJ,+VF,
					+VI,+VU,+VK,
					+VO,+VX,+VZ
	95B 857 644 OP1	Agate Grey			+VD,+VG,+VL
					+VQ
	95B 857 644 4H0	Luxor Beige			+VE,+VH,+VM
	95B 857 644 OM8	Saddle Tan	15-		+VN,+VP
	95B 857 644 7N0	Espresso	15-		+VR
		Mount			
		Grab handle			
9	N 105 963 02	Screw		8	
10	95B 861 687 B	Eye	/L	2	I3CU/3CX
	95B 861 687 B 1E0	Black			+VC,+VJ,+VF,
					+VI,+VU,+VK
					+VO,+VX,+VZ
	95B 861 687 B OP1	Agate Grey			+VD,+VG,+VL
					+VQ
	95B 861 687 B 4H0	Luxor Beige			+VE,+VH,+VM
	95B 861 687 B OM8	Saddle Tan	15-		+VN,+VP
	95B 861 687 B 7N0	Espresso	15-		+VR
(10)	95B 861 688 B	Eye	/R	2	I3CU/3CX
	95B 861 688 B 1E0	Black			+VC,+VJ,+VF,
					+VI,+VU,+VK
					+VO,+VX,+VZ
	95B 861 688 B OP1	Agate Grey			+VD,+VG,+VL
					+VQ

Model: 95B **Model life 2014>>**

Pos	Part Number	Description	Remark	Qty	Model
	95B 861 688 B 4H0	Luxor Beige			+VE,+VH,+VM
	95B 861 688 B OM8	Saddle Tan	15-		+VN,+VP
	95B 861 688 B 7N0	Espresso	15-		+VR
12	95B 868 071 D	Cover Eye Front	/L	2	I3CU/3CX/3FA
	95B 868 071 D 1E0	Black			+VC,+VJ,+VF, +VI,+VU,+VK, +VO,+VX,+VZ
	95B 868 071 D OP1	Agate Grey			+VD,+VG,+VL +VQ
	95B 868 071 D 4H0	Luxor Beige			+VE,+VH,+VM
	95B 868 071 D OM8	Saddle Tan	15-		+VN,+VP
	95B 868 071 D 7N0	Espresso	15-		+VR
(12)	95B 868 071 E	Cover Eye Front	/L	2	I3CU/3CX/3FU
	95B 868 071 E 1E0	Black			+VC,+VJ,+VF, +VI,+VU,+VK, +VO,+VX,+VZ
	95B 868 071 E OP1	Agate Grey			+VD,+VG,+VL +VQ
	95B 868 071 E 4H0	Luxor Beige			+VE,+VH,+VM
	95B 868 071 E OM8	Saddle Tan	15-		+VN,+VP
	95B 868 071 E 7N0	Espresso	15-		+VR
(12)	95B 868 072 D	Cover Eye Front	/R	2	I3CU/3CX/3FA
	95B 868 072 D 1E0	Black			+VC,+VJ,+VF, +VI,+VU,+VK, +VO,+VX,+VZ
	95B 868 072 D OP1	Agate Grey			+VD,+VG,+VL +VQ
	95B 868 072 D 4H0	Luxor Beige			+VE,+VH,+VM,
	95B 868 072 D OM8	Saddle Tan	15-		+VN,+VP
	95B 868 072 D 7N0	Espresso	15-		+VR
(12)	95B 868 072 E	Cover Eye Front	/R	2	I3CU/3CX/3FU
	95B 868 072 E 1E0	Black			+VC,+VJ,+VF, +VI,+VU,+VK, +VO,+VX,+VZ
	95B 868 072 E OP1	Agate Grey			+VD,+VG,+VL +VQ
	95B 868 072 E 4H0	Luxor Beige			+VE,+VH,+VM
	95B 868 072 E OM8	Saddle Tan	15-		+VN,+VP
	95B 868 072 E 7N0	Espresso	15-		+VR
13	95B 868 823 B	Cover Eye Rear	/L	2	I3CU/3CX/3FA
	95B 868 823 B 1E0	Black			+VC,+VJ,+VF, +VI,+VU,+VK, +VO,+VX,+VZ
	95B 868 823 B OP1	Agate Grey			+VD,+VG,+VL +VQ
	95B 868 823 B 4H0	Luxor Beige			+VE,+VH,+VM
	95B 868 823 B OM8	Saddle Tan	15-		+VN,+VP
	95B 868 823 B 7N0	Espresso	15-		+VR
(13)	95B 868 823 C	Cover Eye Rear	/L	2	I3CU/3CX/3FU
	95B 868 823 C 1E0	Black			+VC,+VJ,+VF, +VI,+VU,+VK,

Model: 95B **Model life 2014>>**

Pos	Part Number	Description	Remark	Qty	Model
					+VO,+VX,+VZ
	95B 868 823 C OP1	Agate Grey			+VD,+VG,+VL
					+VQ
	95B 868 823 C 4H0	Luxor Beige			+VE,+VH,+VM
	95B 868 823 C OM8	Saddle Tan	15-		+VN,+VP
	95B 868 823 C 7N0	Espresso	15-		+VR
(13)	95B 868 824 B	Cover	/R	2	I3CU/3CX/3FA
		Eye			
		Rear			
	95B 868 824 B 1E0	Black			+VC,+VJ,+VF,
					+VI,+VU,+VK,
					+VO,+VX,+VZ
	95B 868 824 B OP1	Agate Grey			+VD,+VG,+VL
					+VQ
	95B 868 824 B 4H0	Luxor Beige			+VE,+VH,+VM
	95B 868 824 B OM8	Saddle Tan	15-		+VN,+VP
	95B 868 824 B 7N0	Espresso	15-		+VR
(13)	95B 868 824 C	Cover	/R	2	I3CU/3CX/3FU
		Eye			
		Rear			
	95B 868 824 C 1E0	Black			+VC,+VJ,+VF,
					+VI,+VU,+VK,
					+VO,+VX,+VZ
	95B 868 824 C OP1	Agate Grey			+VD,+VG,+VL
					+VQ
	95B 868 824 C 4H0	Luxor Beige			+VE,+VH,+VM,
	95B 868 824 C OM8	Saddle Tan	15-		+VN,+VP
	95B 868 824 C 7N0	Espresso	15-		+VR
		Mount			
14	N 907 378 03	Round head screw		4	
		M6 X 14			
15	95B 867 561	Covering frame	/L	1	I3FU
(15)	95B 867 562	Covering frame	/R	1	I3FU
16	958 555 615 00	Clamp		2	

Illustration: 807-35

Model: 95B **Model life 2014>>**

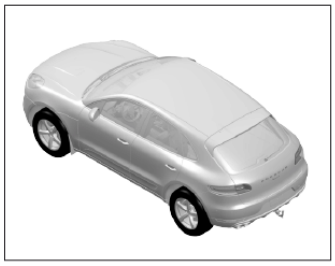

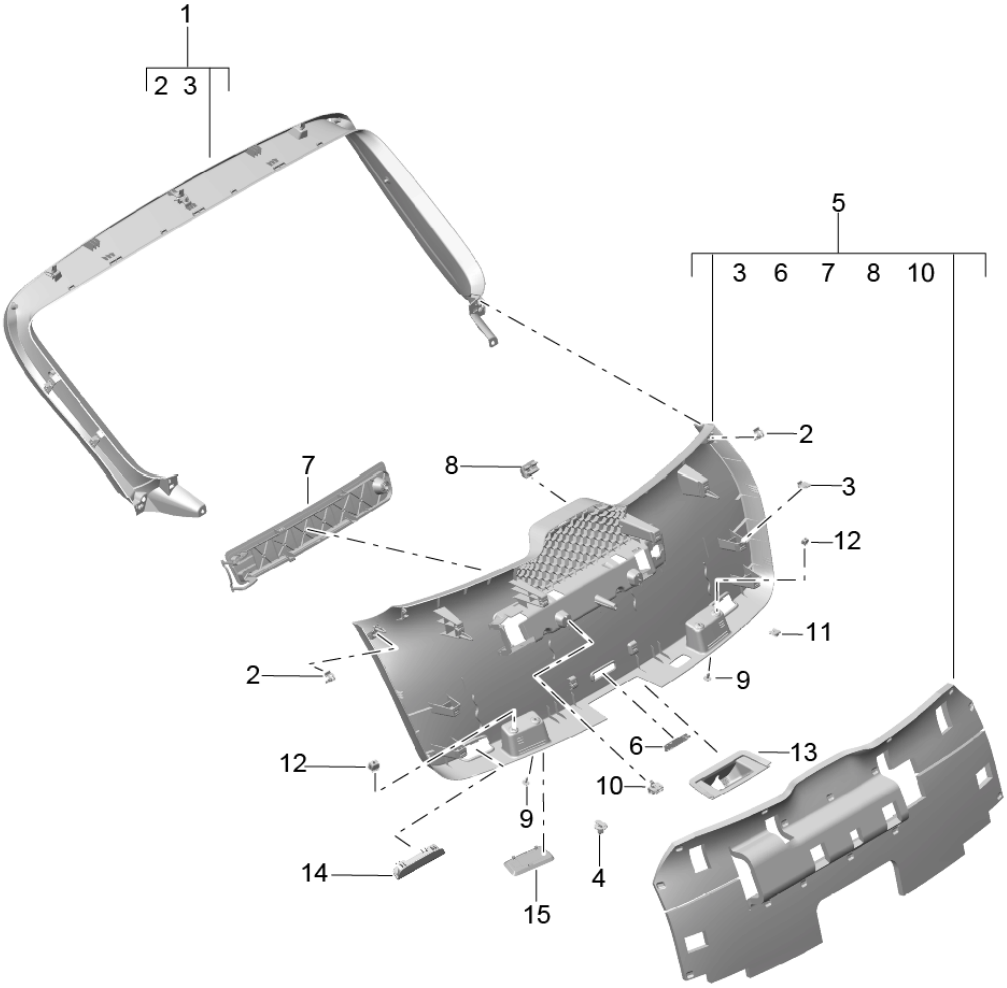

Model: 95B **Model life 2014>>**

Pos	Part Number	Description	Remark	Qty	Model
		Linings			
		Rear lid			
1	95B 867 973	Lining		1	
		Rear lid			
		Upper			
	95B 867 973 1E0	Black			+VC,+VJ,+VF,
					+VI,+VU,+VK,
					+VO,+VX,+VZ
	95B 867 973 OP1	Agate Grey			+VD,+VG,+VL
					+VQ
	95B 867 973 4H0	Luxor Beige			+VE,+VH,+VM
	95B 867 973 OM8	Saddle Tan			+VN,+VP
	95B 867 973 7N0	Espresso			+VR
2	999 507 584 02	Clamp		2	
3	955 555 276 00	Clip		X	
4	WHT 004 750	Expansion rivet		2	
5	95B 867 979 A	Lining		1	
		Rear lid			
		Lower			
	95B 867 979 A 1E0	Black			+VC,+VJ,+VF,
					+VI,+VU,+VK,
					+VO,+VX,+VZ
	95B 867 979 A OP1	Agate Grey			+VD,+VG,+VL
					+VQ
	95B 867 979 A 4H0	Luxor Beige			+VE,+VH,+VM
	95B 867 979 A OM8	Saddle Tan			+VN,+VP
	95B 867 979 A 7N0	Espresso			+VR
6	95B 867 747	Lid		1	
		Emergency operation			
	95B 867 747 1E0	Black			+VC,+VJ,+VF,
					+VI,+VU,+VK,
					+VO,+VX,+VZ
	95B 867 747 OP1	Agate Grey			+VD,+VG,+VL,
					+VQ
	95B 867 747 4H0	Luxor Beige			+VE,+VH,+VM
	95B 867 747 OM8	Saddle Tan			+VN,+VP
	95B 867 747 7N0	Espresso			+VR
7	95B 867 926	Lid		1	
		Warning triangle			
	95B 867 926 1E0	Black			+VC,+VJ,+VF,
					+VI,+VU,+VK,
					+VO,+VX,+VZ
	95B 867 926 OP1	Agate Grey			+VD,+VG,+VL,
					+VQ
	95B 867 926 4H0	Luxor Beige			+VE,+VH,+VM
	95B 867 926 OM8	Saddle Tan			+VN,+VP
	95B 867 926 7N0	Espresso			+VR
8	5J7 867 815	Buffer		1	
9	N 909 868 03	Round head screw		X	
		ST 4,2X13			
10	958 731 633 00	Clamp		2	
11	6K0 867 331 B	Fastening clamp		2	
12	N 905 410 01	Expander nut		4	
13	95B 827 520	Covering for lock		1	
	95B 827 520 1E0	Black			+VC,+VJ,+VF,
					+VI,+VU,+VK
					+VO
	95B 827 520 OP1	Agate Grey			+VD,+VG,+VL,
					+VQ
	95B 827 520 4H0	Luxor Beige			+VE,+VH,+VM
	95B 827 520 OM8	Saddle Tan			+VN,+VP

Model: 95B **Model life 2014>>**

Pos	Part Number	Description	Remark	Qty	Model
	95B 827 520 7N0	Espresso			+VR
14	1K0 947 419 A	Reflector		2	
15	95B 867 581	Cover	/L	1	
		Lining			
	95B 867 581 1E0	Black			
(15)	95B 867 582	Cover	/R	1	
		Lining			
	95B 867 582 1E0	Black			

Illustration: 807-45

Model: 95B **Model life 2014>>**

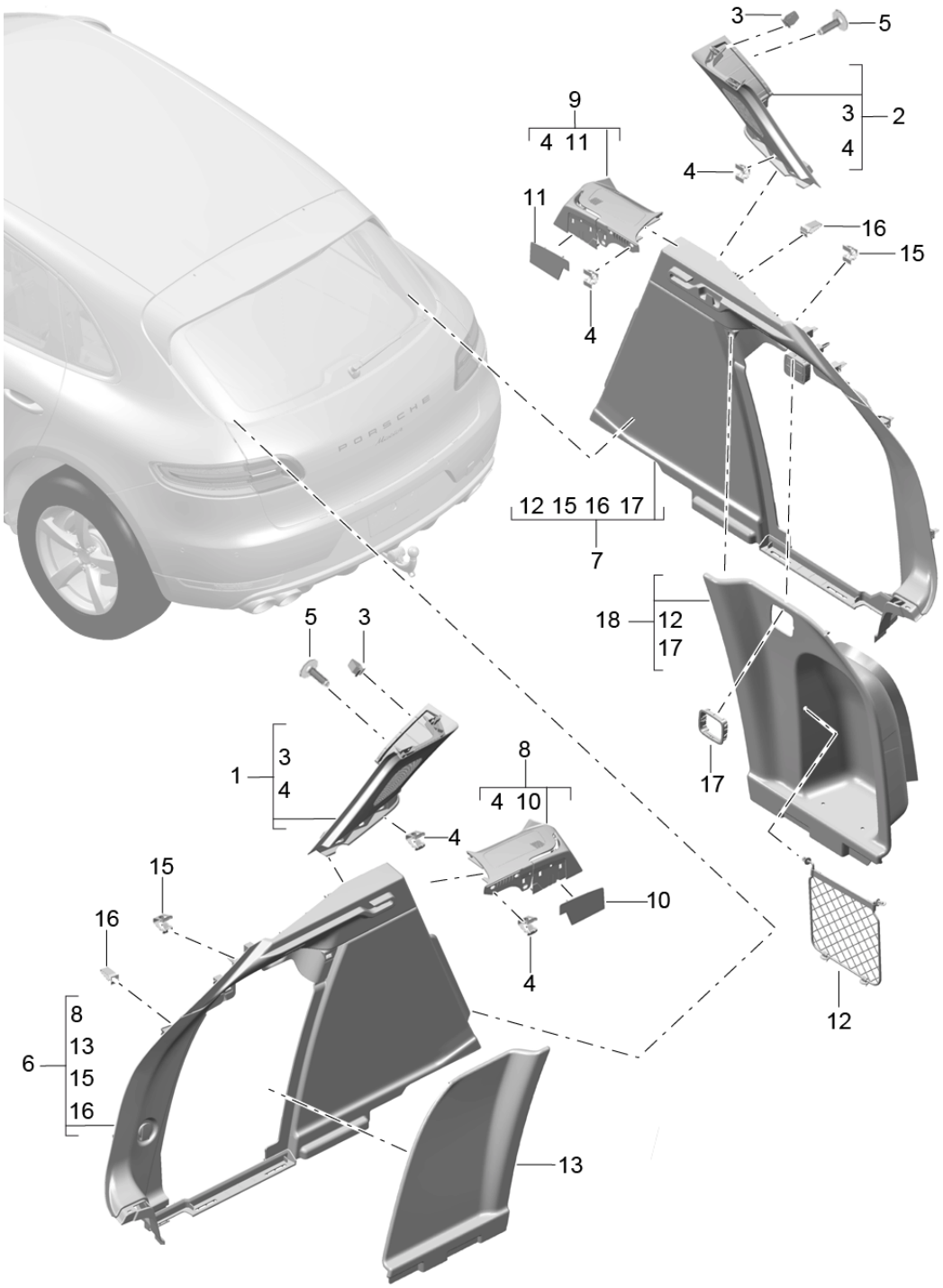

Model: 95B **Model life 2014>>**

Pos	Part Number	Description	Remark	Qty	Model
		Lining			
		Luggage compartment			
		Lateral			
		D-pillar			
1	95B 867 245	Lining	/L	1	I9VK
		D-pillar			
		Basic			
	95B 867 245 OM8	Saddle Tan			+VN,+VP
	95B 867 245 OP1	Agate Grey			+VD,+VG,+VL,
					+VQ
	95B 867 245 1E0	Black			+VC,+VJ,+VF,
					+VI,+VU,+VK,
					+VO,+VX,+VZ
	95B 867 245 4H0	Luxor Beige			+VE,+VH,+VM
	95B 867 245 7N0	Espresso			+VR
(1)	95B 867 245 A	Lining	/L	1	I9VL
		D-pillar			
		Bose			
	95B 867 245 A OM8	Saddle Tan			+VN,+VP
	95B 867 245 A OP1	Agate Grey			+VD,+VG,+VL,
					+VQ
	95B 867 245 A 1E0	Black			+VC,+VJ,+VF,
					+VI,+VU,+VK,
					+VO,+VX,+VZ
	95B 867 245 A 4H0	Luxor Beige			+VE,+VH,+VM
	95B 867 245 A 7N0	Espresso			+VR
(1)	95B 867 245 B	Lining	/L	1	I9VJ
		D-pillar			
		Premium			
	95B 867 245 B OM8	Saddle Tan			+VN,+VP
	95B 867 245 B OP1	Agate Grey			+VD,+VG,+VL,
					+VQ
	95B 867 245 B 1E0	Black			+VC,+VJ,+VF,
					+VI,+VU,+VK,
					+VO,+VX,+VZ
	95B 867 245 B 4H0	Luxor Beige			+VE,+VH,+VM
	95B 867 245 B 7N0	Espresso			+VR
2	95B 867 246	Lining	/R	1	I9VK
		D-pillar			
		Basic			
	95B 867 246 OM8	Saddle Tan			+VN,+VP
	95B 867 246 OP1	Agate Grey			+VD,+VG,+VL,
					+VQ
	95B 867 246 1E0	Black			+VC,+VJ,+VF,
					+VI,+VU,+VK,
					+VO,+VX,+VZ
	95B 867 246 4H0	Luxor Beige			+VE,+VH,+VM
	95B 867 246 7N0	Espresso			+VR
(2)	95B 867 246 A	Lining	/R	1	I9VL
		D-pillar			
		Bose			
	95B 867 246 A OM8	Saddle Tan			+VN,+VP
	95B 867 246 A OP1	Agate Grey			+VD,+VG,+VL,
					+VQ
	95B 867 246 A 1E0	Black			+VC,+VJ,+VF,
					+VI,+VU,+VK,
					+VO
	95B 867 246 A 4H0	Luxor Beige			+VE,+VH,+VM
	95B 867 246 A 7N0	Espresso			+VR
(2)	95B 867 246 B	Lining	/R	1	I9VJ
		D-pillar			
		Premium			
	95B 867 246 B OM8	Saddle Tan			+VN,+VP

Model: 95B **Model life 2014>>**

Pos	Part Number	Description	Remark	Qty	Model
	95B 867 246 B OP1	Agate Grey			+VD,+VG,+VL, +VQ
	95B 867 246 B 1E0	Black			+VC,+VJ,+VF, +VI,+VU,+VK, +VO,+VX,+VZ
	95B 867 246 B 4H0	Luxor Beige			+VE,+VH,+VM
	95B 867 246 B 7N0	Espresso			+VR
		Mount			
3	999 507 839 01	Clamp		X	
4	999 507 584 02	Clamp		X	
5	999 073 369 09	Oval-head screw M 5 X 18		2	
6	95B 863 879	Side trim panel Basic	/L	1	I9MA
	95B 863 879 OF2	Espresso			+VR
	95B 863 879 ZG1	Black			+VC,+VJ,+VF, +VI,+VU,+VK, +VO,+VX,+VZ
	95B 863 879 ZN3	Luxor Beige			+VE,+VH,+VM
	95B 863 879 ZP4	Agate Grey			+VD,+VG,+VL, +VQ
	95B 863 879 ZR5	Saddle Tan			+VN,+VP
(6)	95B 863 879 A	Side trim panel Comfort version	/L	1	I9MB
	95B 863 879 A OF2	Espresso			+VR
	95B 863 879 A ZG1	Black			+VC,+VJ,+VF, +VI,+VU,+VK, +VO,+VX,+VZ
	95B 863 879 A ZN3	Luxor Beige			+VE,+VH,+VM
	95B 863 879 A ZP4	Agate Grey			+VD,+VG,+VL, +VQ
	95B 863 879 A ZR5	Saddle Tan			+VN,+VP
7	95B 863 880	Side trim panel Basic	/R	1	I9MA
	95B 863 880 OF2	Espresso			+VR
	95B 863 880 ZG1	Black			+VC,+VJ,+VF, +VI,+VU,+VK, +VO,+VX,+VZ
	95B 863 880 ZN3	Luxor Beige			+VE,+VH,+VM
	95B 863 880 ZP4	Agate Grey			+VD,+VG,+VL, +VQ
	95B 863 880 ZR5	Saddle Tan			+VN,+VP
(7)	95B 863 880 A	Side trim panel Comfort version	/R	1	I9MB
	95B 863 880 A OF2	Espresso			+VR
	95B 863 880 A ZG1	Black			+VC,+VJ,+VF, +VI,+VU,+VK, +VO,+VX,+VZ
	95B 863 880 A ZN3	Luxor Beige			+VE,+VH,+VM
	95B 863 880 A ZP4	Agate Grey			+VD,+VG,+VL, +VQ
	95B 863 880 A ZR5	Saddle Tan			+VN,+VP
8	95B 863 337	Cover Bleeding	/L	1	
	95B 863 337 OM8	Saddle Tan			+VN,+VP
	95B 863 337 OP1	Agate Grey			+VD,+VG,+VL, +VQ
	95B 863 337 1E0	Black			+VC,+VJ,+VF, +VI,+VU,+VK, +VO,+VX,+VZ
	95B 863 337 4H0	Luxor Beige			+VE,+VH,+VM
	95B 863 337 7N0	Espresso			+VR
8	95B 863 338	Cover	/R	1	

Model: 95B **Model life 2014>>**

Pos	Part Number	Description	Remark	Qty	Model
		Bleeding			
	95B 863 338 OM8	Saddle Tan			+VN,+VP
	95B 863 338 OP1	Agate Grey			+VD,+VG,+VL, +VQ
	95B 863 338 1E0	Black			+VC,+VJ,+VF, +VI,+VU,+VK, +VO,+VX,+VZ
	95B 863 338 4H0	Luxor Beige			+VE,+VH,+VM
	95B 863 338 7N0	Espresso			+VR
9	95B 863 338	Cover	/R	1	
		Bleeding			
	95B 863 338 OM8	Saddle Tan			+VN,+VP
	95B 863 338 OP1	Agate Grey			+VD,+VG,+VL, +VQ
	95B 863 338 1E0	Black			+VC,+VJ,+VF, +VI,+VU,+VK, +VO,+VX,+VZ
	95B 863 338 4H0	Luxor Beige			+VE,+VH,+VM
	95B 863 338 7N0	Espresso			+VR
10	95B 863 279	Cover	/L	1	
		Upper			
	95B 863 279 OM8	Saddle Tan			+VN,+VP
	95B 863 279 OP1	Agate Grey			+VD,+VG,+VL +VQ
	95B 863 279 1E0	Black			+VC,+VJ,+VF, +VI,+VU,+VK, +VO,+VX,+VZ
	95B 863 279 4H0	Luxor Beige			+VE,+VH,+VM
	95B 863 279 7N0	Espresso			+VR
10	95B 863 280	Cover	/R	1	
		Upper			
	95B 863 280 OM8	Saddle Tan			+VN,+VP
	95B 863 280 OP1	Agate Grey			+VD,+VG,+VL +VQ
	95B 863 280 1E0	Black			+VC,+VJ,+VF, +VI,+VU,+VK, +VO,+VX,+VZ
	95B 863 280 4H0	Luxor Beige			+VE,+VH,+VM
	95B 863 280 7N0	Espresso			+VR
11	95B 863 280	Cover	/R	1	
		Upper			
	95B 863 280 OM8	Saddle Tan			+VN,+VP
	95B 863 280 OP1	Agate Grey			+VD,+VG,+VL +VQ
	95B 863 280 1E0	Black			+VC,+VJ,+VF, +VI,+VU,+VK, +VO,+VX,+VZ
	95B 863 280 4H0	Luxor Beige			+VE,+VH,+VM
	95B 863 280 7N0	Espresso			+VR
12	95B 861 690	Net		1	
	95B 861 690 DK4	Black			+VC,+VJ,+VF, +VI,+VU,+VK +VO,+VX,+VZ
	95B 861 690 OK2	Agate Grey			+VD,+VG,+VL, +VQ
	95B 861 690 DM5	Luxor Beige			+VE,+VH,+VM
	95B 861 690 OL7	Saddle Tan			+VN,+VP
	95B 861 690 DP8	Espresso			+VR
13	95B 863 989	Lid		1	
	95B 863 989 ZG1	Black			+VC,+VJ,+VF, +VI,+VU,+VK +VO,+VX,+VZ
	95B 863 989 ZP4	Agate Grey			+VD,+VG,+VL,

Model: 95B **Model life 2014>>**

Pos	Part Number	Description	Remark	Qty	Model
					+VQ
	95B 863 989 ZN3	Luxor Beige			+VE,+VH,+VM
	95B 863 989 ZR5	Saddle Tan			+VN,+VP
	95B 863 989 OF2	Espresso			+VR
14		Switch			
		Air spring			
		Trailer coupling			
		See illustrations			
		0/02/00			
		Mount			
15	955 555 388 00	Clamp		2	
16	955 555 276 00	Clip		5	
17	7P5 868 288 A	Trim for switch		1	I1BK/1D3
	7P5 868 288 A 1E0	Black			+VC,+VJ,+VF,
					+VI,+VU,+VK
					+VO,+VX,+VZ
	7P5 868 288 A OP1	Agate Grey			+VD,+VG,+VL,
					+VQ
	7P5 868 288 A OM8	Saddle Tan			+VN,+VP
	7P5 868 288 A 4H0	Luxor Beige			+VE,+VH,+VM
	7P5 868 288 A 7N0	Espresso			+VR
18	95B 863 990	Lid		1	
		Right			
	95B 863 990 ZG1	Black			+VC,+VJ,+VF,
					+VI,+VU,+VK,
					+VO,+VX,+VZ
	95B 863 990 ZP4	Agate Grey			+VD,+VG,+VL,
					+VQ
	95B 863 990 ZN3	Luxor Beige			+VE,+VH,+VM
	95B 863 990 ZR5	Saddle Tan			+VN,+VP
	95B 863 990 OF2	Espresso			+VR
(18)	95B 863 990 A	Lid		1	I1D3
		Right			
	95B 863 990 A ZG1	Black			+VC,+VJ,+VF,
					+VI,+VU,+VK,
					+VO,+VX,+VZ
	95B 863 990 A ZP4	Agate Grey			+VD,+VG,+VL,
					+VQ
	95B 863 990 A ZN3	Luxor Beige			+VE,+VH,+VM
	95B 863 990 A ZR5	Saddle Tan			+VN,+VP
	95B 863 990 A OF2	Espresso			+VR

Illustration: 807-50

PORSCHE

Model: 95B **Model life 2014>>**

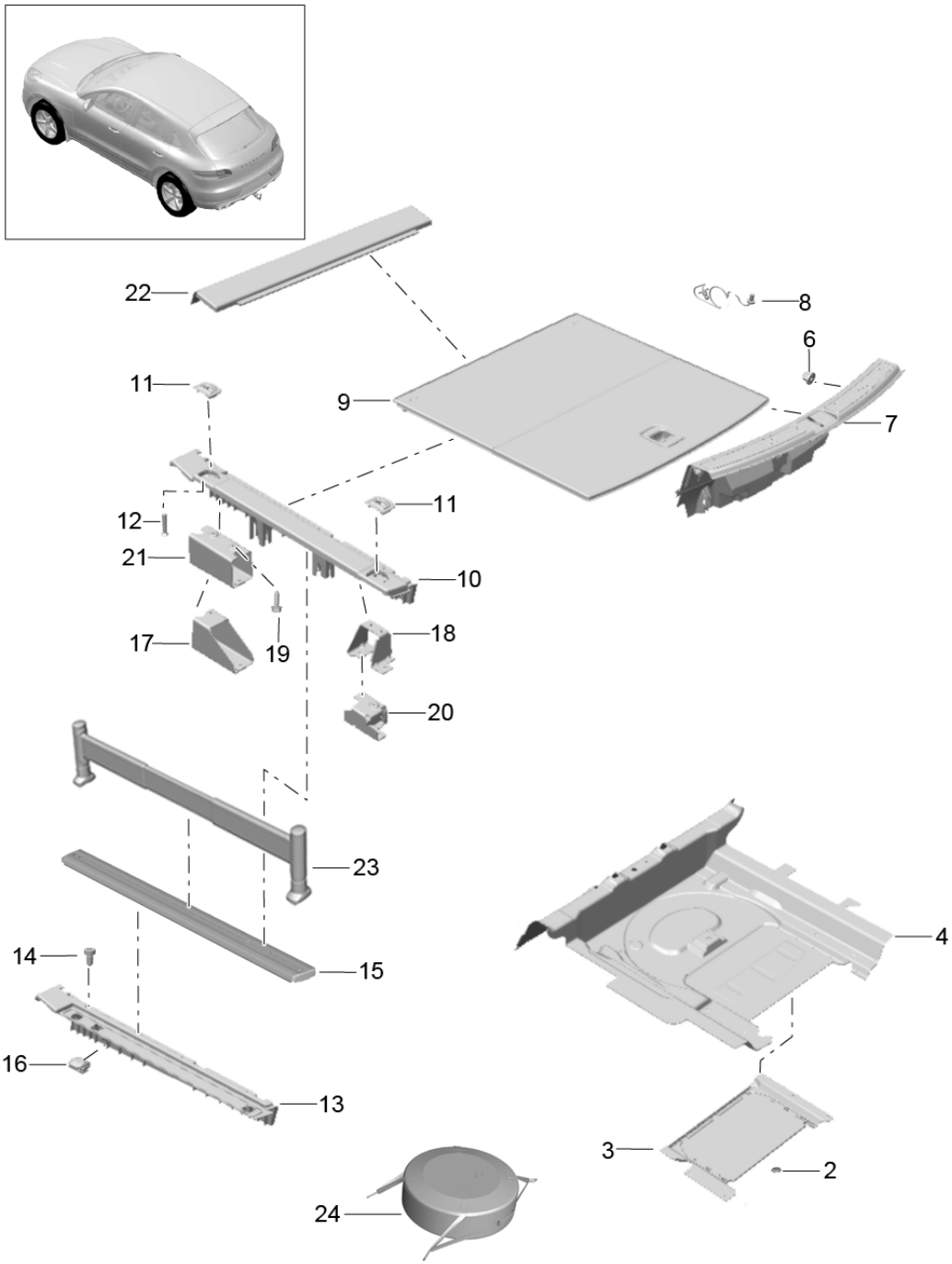

Model: 95B **Model life 2014>>**

Pos	Part Number	Description	Remark	Qty	Model
		Lining Luggage compartment Accessories Loadspace system			
2	8R0 839 723	Clip		4	I8RV/9VJ/9VK I9VL
		Spare wheel covering			
3	95B 863 565 C	Lid Battery box		1	I9VJ/9VL
(3)	95B 863 565 D	Lid Battery box		1	I8RV/9VK
4	95B 863 462	Pad Luggage compartment Floor Basic		1	I8RV/9VK
(4)	95B 863 462 B	Pad Luggage compartment Floor		1	I9VJ/9VL
(4)	95B 863 462 C	Pad Luggage compartment Floor Basic		1	I8RV/9VK
(4)	95B 863 462 D	Pad Luggage compartment Floor		1	I9VJ/9VL
(4)	95B 863 462 E	Pad Luggage compartment Floor Basic		1	I8RV/9VK
(4)	95B 863 462 F	Pad Luggage compartment Floor	15-	1	I9VJ/9VL
6	999 076 081 40	Plastic nut T5		2	
(7)	95B 864 483 D	Lining Lock carrier	-16	1	I0K0/2P3
	95B 864 483 D 1E0	Black			+VC,+VJ,+VF, +VI,+VU,+VK, +VO,+VX,+VZ
	95B 864 483 D OP1	Agate Grey			+VD,+VG,+VL, +VQ
	95B 864 483 D 4H0	Luxor Beige			+VE,+VH,+VM
	95B 864 483 D OM8	Saddle Tan			+VN,+VP
	95B 864 483 D 7N0	Espresso			+VR
(7)	95B 864 483 K	Lining Lock carrier	17-	1	I0K0/2P3
	95B 864 483 K 1E0	Black			+VC,+VJ,+VF, +VI,+VU,+VK, +VO,+VX,+VZ +FA,+FL,+FE +FF,+FN,+FK +TR,+TS
	95B 864 483 K OP1	Agate Grey			+VD,+VG,+VL, +VQ +FB,+FM
	95B 864 483 K 4H0	Luxor Beige			+VE,+VH,+VM +FC,+FH
	95B 864 483 K OM8	Saddle Tan			+VN,+VP +FI
	95B 864 483 K 7N0	Espresso			+VR
(7)	95B 864 483 F	Lining Lock carrier	-16	1	I0K0/2P2
	95B 864 483 F 1E0	Black			+VC,+VJ,+VF,

Model: 95B **Model life 2014>>**

Pos	Part Number	Description	Remark	Qty	Model
					+VI,+VU,+VK,
					+VO,+VX,+VZ
	95B 864 483 F OP1	Agate Grey			+VD,+VG,+VL,
					+VQ
	95B 864 483 F 4H0	Luxor Beige			+VE,+VH,+VM
	95B 864 483 F OM8	Saddle Tan			+VN,+VP
	95B 864 483 F 7N0	Espresso			+VR
(7)	95B 864 483 J	Lining	17-	1	I0K0/2P2
		Lock carrier			
	95B 864 483 J 1E0	Black			+VC,+VJ,+VF,
					+VI,+VU,+VK,
					+VO,+VX,+VZ
					+FA,+FL,+FE
					+FF,+FN,+FK
					+TR,+TS
	95B 864 483 J OP1	Agate Grey			+VD,+VG,+VL,
					+VQ
					+FB,+FM
	95B 864 483 J 4H0	Luxor Beige			+VE,+VH,+VM
					+FC,+FH
	95B 864 483 J OM8	Saddle Tan			+VN,+VP
					+FI
	95B 864 483 J 7N0	Espresso			+VR
8	8R0 860 273	Retaining strap		1	I1T3/1T7
9	95B 861 531	Luggage compartment cover		1	I0K0
	95B 861 531 ZG1	Black			+VC,+VJ,+VF,
					+VI,+VU,+VK
					+VO,+VX,+VZ
	95B 861 531 ZP4	Agate Grey			+VD,+VG,+VL,
					+VQ
	95B 861 531 ZN3	Luxor Beige			+VE,+VH,+VM
	95B 861 531 ZR5	Saddle Tan			+VN,+VP
	95B 861 531 OF2	Espresso			+VR
10	95B 861 827	Filler piece	/L	1	I0K0/3GA
		Luggage compartment cover			
	95B 861 827 ZG1	Black			+VC,+VJ,+VF,
					+VI,+VU,+VK,
					+VO,+VX,+VZ
	95B 861 827 ZP4	Agate Grey			+VD,+VG,+VL,
					+VQ
	95B 861 827 ZN3	Luxor Beige			+VE,+VH,+VM
	95B 861 827 ZR5	Saddle Tan			+VN,+VP
	95B 861 827 OF2	Espresso			+VR
(10)	95B 861 828	Filler piece	/R	1	I0K0/3GA
		Luggage compartment cover			
	95B 861 828 ZG1	Black			+VC,+VJ,+VF,
					+VI,+VU,+VK,
					+VO,+VX,+VZ
	95B 861 828 ZP4	Agate Grey			+VD,+VG,+VL,
					+VQ
	95B 861 828 ZN3	Luxor Beige			+VE,+VH,+VM
	95B 861 828 ZR5	Saddle Tan			+VN,+VP
	95B 861 828 OF2	Espresso			+VR
11	1K0 864 203	Eye		4	I3GA
		Luggage compartment			
	1K0 864 203 2ZZ	Chrome			
12	N 105 560 01	Countersunk-head screw		8	
		M6X30			
		Mount			
		Eye			
		Luggage compartment			
13	95B 861 835	Filler piece	/L	1	I3GN
		Luggage compartment cover			

Model: 95B **Model life 2014>>**

Pos	Part Number	Description	Remark	Qty	Model
	95B 861 835 ZG1	Black			+VC,+VJ,+VF, +VI,+VU,+VK, +VO,+VX,+VZ
	95B 861 835 ZP4	Agate Grey			+VD,+VG,+VL, +VQ
	95B 861 835 ZN3	Luxor Beige			+VE,+VH,+VM
	95B 861 835 ZR5	Saddle Tan			+VN,+VP
	95B 861 835 OF2	Espresso			+VR
(13)	95B 861 836	Filler piece Luggage compartment cover	/R	1	I3GN
	95B 861 836 ZG1	Black			+VC,+VJ,+VF, +VI,+VU,+VK, +VO,+VX,+VZ
	95B 861 836 ZP4	Agate Grey			+VD,+VG,+VL, +VQ
	95B 861 836 ZN3	Luxor Beige			+VE,+VH,+VM
	95B 861 836 ZR5	Saddle Tan			+VN,+VP
	95B 861 836 OF2	Espresso			+VR
14	N 909 725 01	Pan-head screw M8 X 16 Mount Retaining strip		6	I3GN
15	8R0 863 555 B	Retaining strip	/L	1	I3GN
(15)	8R0 863 556 B	Retaining strip	/R	1	I3GN
16	4F9 863 539	Eye Luggage compartment		4	I3GN
17	8R0 813 383	Bracket Front	/L	1	I0K0/3GA
(17)	8R0 813 384	Bracket Front	/R	1	I0K0/3GA
18	8R0 813 383 H	Bracket Rear	/L	1	I3GA
(18)	8R0 813 384 H	Bracket Rear	/R	1	I3GA
19	N 019 502 11	Hexagon-head bolt M8 X 25		8	
20	8R0 863 253 F	Support Front	/L	1	I3GN
(20)	8R0 863 254 H	Support Front	/R	1	I3GN
21	8R0 863 253 C	Support Rear	/L	1	I3GN
(21)	8R0 863 254 C	Support Rear	/R	1	I3GN
22	95B 861 529	Luggage compartment cover Front		1	I0K0
	95B 861 529 ZG1	Black			+VC,+VJ,+VF, +VI,+VU,+VK, +VO,+VX,+VZ
	95B 861 529 ZP4	Agate Grey			+VD,+VG,+VL, +VQ
	95B 861 529 ZN3	Luxor Beige			+VE,+VH,+VM
	95B 861 529 ZR5	Saddle Tan			+VN,+VP
	95B 861 529 OF2	Espresso			+VR
23	4F9 860 378 F	Telescopic rod 715MM		1	I3GN
24	955 551 504 00	Bag		1	I3GN

Illustration: 807-55

PORSCHE

Model: 95B **Model life 2014>>**

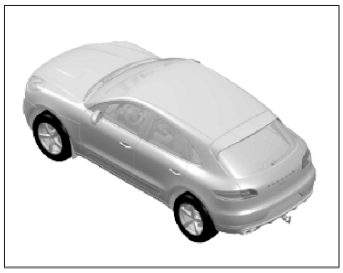

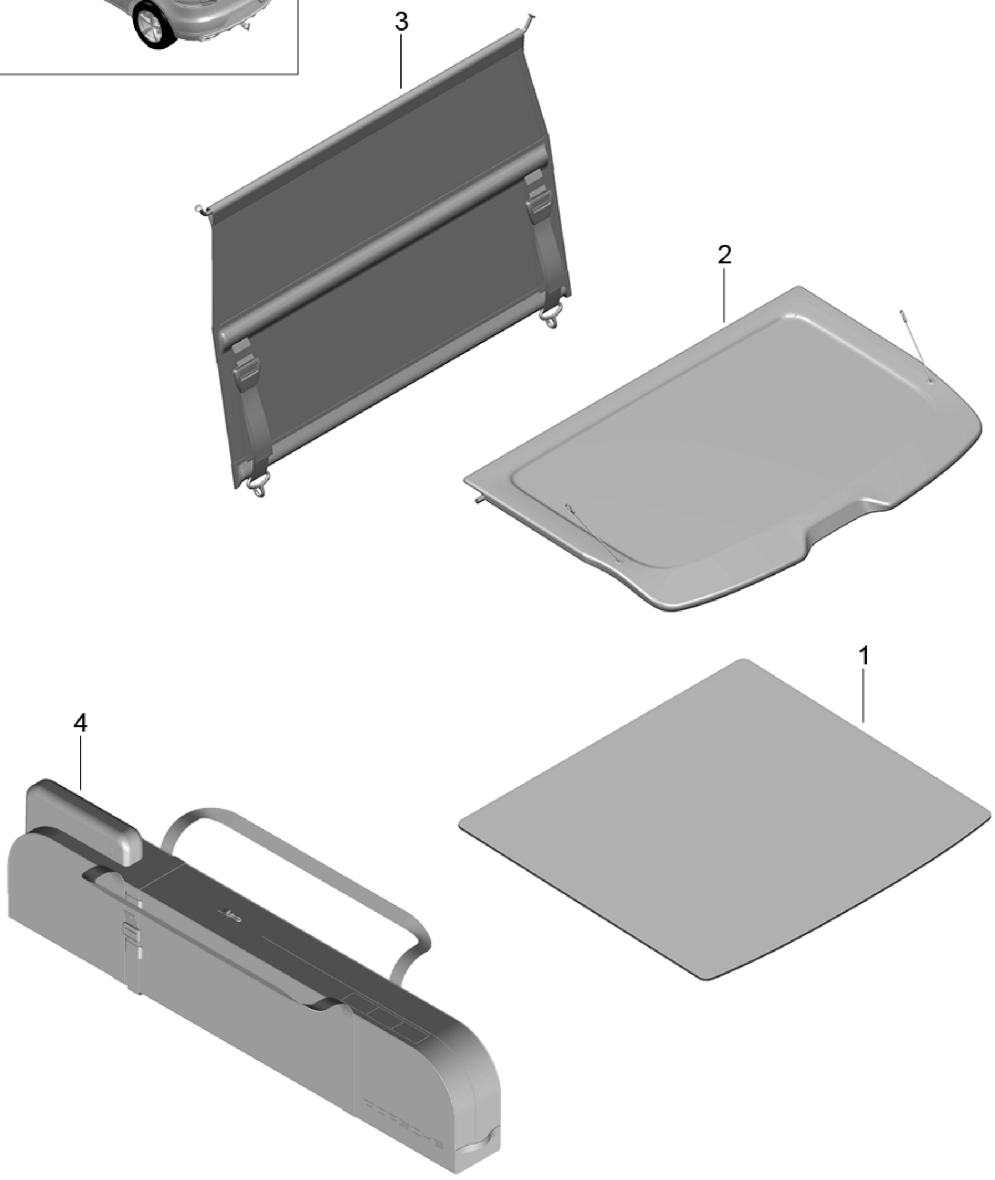

Model: 95B **Model life 2014>>**

Pos	Part Number	Description	Remark	Qty	Model
		Luggage compartment cover			
		Net partition			
		Accessories			
		Insert			
1	95B 864 769	Mat		1	I3GN
	95B 864 769 OS5	Black			+VC,+VJ,+VF,
					+VI,+VU,+VK
					+VO,+VX,+VZ
	95B 864 769 OQ3	Agate Grey			+VD,+VG,+VL,
					+VQ
	95B 864 769 OR4	Luxor Beige			+VE,+VH,+VM
	95B 864 769 OL7	Saddle Tan			+VN,+VP
	95B 864 769 OT7	Espresso			+VR
2	95B 867 769 B	Lid		1	IQE0
		Luggage compartment			
	95B 867 769 B OF5	Black			+VC,+VJ,+VF,
					+VI,+VU,+VK,
					+VO
	95B 867 769 B OB1	Agate Grey			+VD,+VG,+VL,
					+VQ
	95B 867 769 B OD3	Luxor Beige			+VE,+VH,+VM
	95B 867 769 B OE4	Saddle Tan			+VN,+VP
	95B 867 769 B OC2	Espresso			+VR
(2)	95B 867 769 C	Lid		1	IQE1
		Luggage compartment			
	95B 867 769 C OF5	Black			+VC,+VJ,+VF,
					+VI,+VU,+VK,
					+VO
	95B 867 769 C OB1	Agate Grey			+VD,+VG,+VL,
					+VQ
	95B 867 769 C OD3	Luxor Beige			+VE,+VH,+VM
	95B 867 769 C OE4	Saddle Tan			+VN,+VP
	95B 867 769 C OC2	Espresso			+VR
3	95B 861 691 A	Net partition		1	I3CX
		Including			
		Bag			
	95B 861 691 A AY1	Black			
4	95B 860 811	Ski bag		1	I3X1
		Including			
		Bag			

Illustration: 807-65

PORSCHE

Model: 95B **Model life 2014>>**

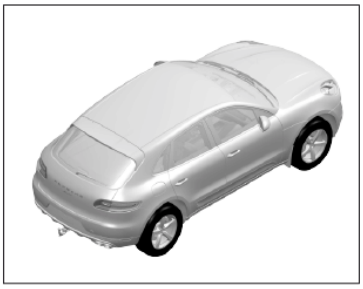

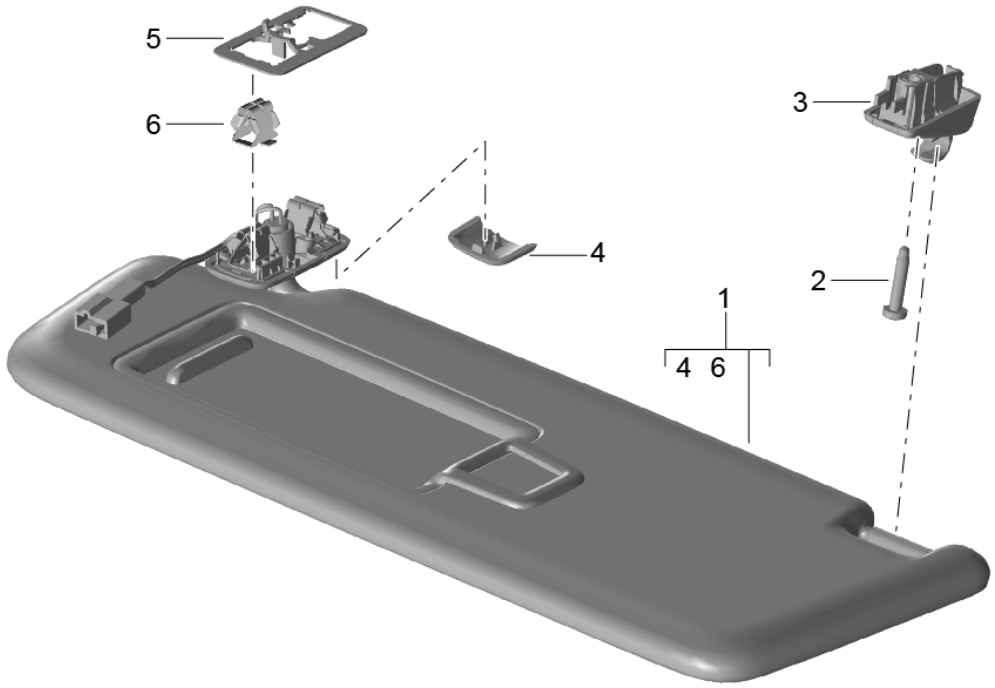

Model: 95B **Model life 2014>>**

Pos	Part Number	Description	Remark	Qty	Model
		Sun visors			
1	95B 857 551 AH	Sun visor	/L	1	IL0L/6NJ/9MA
	95B 857 551 AH OF7	Black			+VC,+VJ,+VF,
					+VI,+VU,+VK,
					+VO,+VX,+VZ
	95B 857 551 AH OA2	Agate Grey			+VD,+VG,+VL,
					+VQ
	95B 857 551 AH OE6	Luxor Beige			+VE,+VH,+VM
	95B 857 551 AH ON9	Saddle Tan			+VN,+VP
	95B 857 551 AH OJ8	Espresso			+VR
(1)	95B 857 552 AH	Sun visor	/R	1	IL0R/6NJ/9MA
	95B 857 552 AH OF7	Black			+VC,+VJ,+VF,
					+VI,+VU,+VK,
					+VO,+VX,+VZ
	95B 857 552 AH OA2	Agate Grey			+VD,+VG,+VL,
					+VQ
	95B 857 552 AH OE6	Luxor Beige			+VE,+VH,+VM
	95B 857 552 AH ON9	Saddle Tan			+VN,+VP
	95B 857 552 AH OJ8	Espresso			+VR
(1)	95B 857 551 AJ	Sun visor	/L	1	IL0L/6NJ/9MB
	95B 857 551 AJ OF7	Black			+VC,+VJ,+VF,
					+VI,+VU,+VK,
					+VO,+VX,+VZ
	95B 857 551 AJ OA2	Agate Grey			+VD,+VG,+VL,
					+VQ
	95B 857 551 AJ OE6	Luxor Beige			+VE,+VH,+VM
	95B 857 551 AJ ON9	Saddle Tan			+VN,+VP
	95B 857 551 AJ OJ8	Espresso			+VR
(1)	95B 857 552 AJ	Sun visor	/R	1	IL0R/6NJ/9MB
	95B 857 552 AJ OF7	Black			+VC,+VJ,+VF,
					+VI,+VU,+VK,
					+VO,+VX,+VZ
	95B 857 552 AJ OA2	Agate Grey			+VD,+VG,+VL,
					+VQ
	95B 857 552 AJ OE6	Luxor Beige			+VE,+VH,+VM
	95B 857 552 AJ ON9	Saddle Tan			+VN,+VP
	95B 857 552 AJ OJ8	Espresso			+VR
(1)	95B 857 551 AK	Sun visor	/L	1	IL0L/6NN/9MA
		Alcantara			
	95B 857 551 AK 2W0	Black			+VC,+VJ,+VF,
					+VI,+VU,+VK,
					+VO,+VX,+VZ
	95B 857 551 AK OU5	Agate Grey			+VD,+VG,+VL,
					+VQ
	95B 857 551 AK 9U1	Luxor Beige			+VE,+VH,+VM
	95B 857 551 AK OP2	Saddle Tan			+VN,+VP
	95B 857 551 AK 9U7	Espresso			+VR
(1)	95B 857 552 AK	Sun visor	/R	1	IL0R/6NN/9MA
		Alcantara			
	95B 857 552 AK 2W0	Black			+VC,+VJ,+VF,
					+VI,+VU,+VK,
					+VO,+VX,+VZ
	95B 857 552 AK OU5	Agate Grey			+VD,+VG,+VL,
					+VQ
	95B 857 552 AK 9U1	Luxor Beige			+VE,+VH,+VM
	95B 857 552 AK OP2	Saddle Tan			+VN,+VP
	95B 857 552 AK 9U7	Espresso			+VR
(1)	95B 857 551 AL	Sun visor	/L	1	IL0L/6NN/9MB
		Alcantara			
	95B 857 551 AL 2W0	Black			+VC,+VJ,+VF,
					+VI,+VU,+VK,
					+VO,+VX,+VZ
	95B 857 551 AL OU5	Agate Grey			+VD,+VG,+VL,

Model: 95B **Model life 2014>>**

Pos	Part Number	Description	Remark	Qty	Model
					+VQ
	95B 857 551 AL 9U1	Luxor Beige			+VE,+VH,+VM
	95B 857 551 AL OP2	Saddle Tan			+VN,+VP
	95B 857 551 AL 9U7	Espresso			+VR
(1)	95B 857 552 AL	Sun visor	/R	1	IL0R/6NN/9MB
		Alcantara			
	95B 857 552 AL 2W0	Black			+VC,+VJ,+VF,
					+VI,+VU,+VK,
					+VO,+VX,+VZ
	95B 857 552 AL OU5	Agate Grey			+VD,+VG,+VL,
					+VQ
	95B 857 552 AL 9U1	Luxor Beige			+VE,+VH,+VM
	95B 857 552 AL OP2	Saddle Tan			+VN,+VP
	95B 857 552 AL 9U7	Espresso			+VR
(1)	95B 857 551 AM	Sun visor	/L	1	IL0R/6NJ/9MA
	95B 857 551 AM OF7	Black			+VC,+VJ,+VF,
					+VI,+VU,+VK,
					+VO,+VX,+VZ
	95B 857 551 AM OA2	Agate Grey			+VD,+VG,+VL,
					+VQ
	95B 857 551 AM OE6	Luxor Beige			+VE,+VH,+VM
	95B 857 551 AM ON9	Saddle Tan			+VN,+VP
	95B 857 551 AM OJ8	Espresso			+VR
(1)	95B 857 552 AM	Sun visor	/R	1	IL0L/6NJ/9MA
	95B 857 552 AM OF7	Black			+VC,+VJ,+VF,
					+VI,+VU,+VK,
					+VO,+VX,+VZ
	95B 857 552 AM OA2	Agate Grey			+VD,+VG,+VL,
					+VQ
	95B 857 552 AM OE6	Luxor Beige			+VE,+VH,+VM
	95B 857 552 AM ON9	Saddle Tan			+VN,+VP
	95B 857 552 AM OJ8	Espresso			+VR
(1)	95B 857 551 AN	Sun visor	/L	1	IL0R/6NJ/9MB
	95B 857 551 AN OF7	Black			+VC,+VJ,+VF,
					+VI,+VU,+VK,
					+VO,+VX,+VZ
	95B 857 551 AN OA2	Agate Grey			+VD,+VG,+VL,
					+VQ
	95B 857 551 AN OE6	Luxor Beige			+VE,+VH,+VM
	95B 857 551 AN ON9	Saddle Tan			+VN,+VP
	95B 857 551 AN OJ8	Espresso			+VR
(1)	95B 857 552 AN	Sun visor	/R	1	IL0L/6NJ/9MB
	95B 857 552 AN OF7	Black			+VC,+VJ,+VF,
					+VI,+VU,+VK,
					+VO,+VX,+VZ
	95B 857 552 AN OA2	Agate Grey			+VD,+VG,+VL,
					+VQ
	95B 857 552 AN OE6	Luxor Beige			+VE,+VH,+VM
	95B 857 552 AN ON9	Saddle Tan			+VN,+VP
	95B 857 552 AN OJ8	Espresso			+VR
(1)	95B 857 551 AP	Sun visor	/L	1	IL0R/6NN/9MA
		Alcantara			
	95B 857 551 AP 2W0	Black			+VC,+VJ,+VF,
					+VI,+VU,+VK,
					+VO,+VX,+VZ
	95B 857 551 AP OU5	Agate Grey			+VD,+VG,+VL,
					+VQ
	95B 857 551 AP 9U1	Luxor Beige			+VE,+VH,+VM
	95B 857 551 AP OP2	Saddle Tan			+VN,+VP
	95B 857 551 AP 9U7	Espresso			+VR
(1)	95B 857 552 AP	Sun visor	/R	1	IL0L/6NN/9MA
		Alcantara			
	95B 857 552 AP 2W0	Black			+VC,+VJ,+VF,

Model: 95B **Model life 2014>>**

Pos	Part Number	Description	Remark	Qty	Model
					+VI,+VU,+VK,
					+VO,+VX,+VZ
	95B 857 552 AP OU5	Agate Grey			+VD,+VG,+VL,
					+VQ
	95B 857 552 AP 9U1	Luxor Beige			+VE,+VH,+VM
	95B 857 552 AP OP2	Saddle Tan			+VN,+VP
	95B 857 552 AP 9U7	Espresso			+VR
(1)	95B 857 551 AQ	Sun visor	/L	1	IL0R/6NN/9MB
		Alcantara			
	95B 857 551 AQ 2W0	Black			+VC,+VJ,+VF,
					+VI,+VU,+VK,
					+VO,+VX,+VZ
	95B 857 551 AQ OU5	Agate Grey			+VD,+VG,+VL,
					+VQ
	95B 857 551 AQ 9U1	Luxor Beige			+VE,+VH,+VM
	95B 857 551 AQ OP2	Saddle Tan			+VN,+VP
	95B 857 551 AQ 9U7	Espresso			+VR
(1)	95B 857 552 AQ	Sun visor	/R	1	IL0L/6NN/9MB
		Alcantara			
	95B 857 552 AQ 2W0	Black			+VC,+VJ,+VF,
					+VI,+VU,+VK,
					+VO,+VX,+VZ
	95B 857 552 AQ OU5	Agate Grey			+VD,+VG,+VL,
					+VQ
	95B 857 552 AQ 9U1	Luxor Beige			+VE,+VH,+VM
	95B 857 552 AQ OP2	Saddle Tan			+VN,+VP
	95B 857 552 AQ 9U7	Espresso			+VR
(1)	95B 857 552 BP	Sun visor	/R (CH)	1	IL0L/6DQ/6NJ
					I9MA
	95B 857 552 BP OF7	Black			+VC,+VJ,+VF,
					+VI,+VU,+VK,
					+VO,+VX,+VZ
	95B 857 552 BP OA2	Agate Grey			+VD,+VG,+VL,
					+VQ
	95B 857 552 BP OE6	Luxor Beige			+VE,+VH,+VM
	95B 857 552 BP ON9	Saddle Tan			+VN,+VP
	95B 857 552 BP OJ8	Espresso			+VR
(1)	95B 857 552 BQ	Sun visor	/R (CH)	1	IL0L/6DQ/6NJ
					I9MB
	95B 857 552 BQ OF7	Black			+VC,+VJ,+VF,
					+VI,+VU,+VK,
					+VO,+VX,+VZ
	95B 857 552 BQ OA2	Agate Grey			+VD,+VG,+VL,
					+VQ
	95B 857 552 BQ OE6	Luxor Beige			+VE,+VH,+VM
	95B 857 552 BQ ON9	Saddle Tan			+VN,+VP
	95B 857 552 BQ OJ8	Espresso			+VR
(1)	95B 857 552 BR	Sun visor	/R (CH)	1	IL0L/6DQ/6NN
					I9MA
		Alcantara			
	95B 857 552 BR 2W0	Black			+VC,+VJ,+VF,
					+VI,+VU,+VK,
					+VO,+VX,+VZ
	95B 857 552 BR OU5	Agate Grey			+VD,+VG,+VL,
					+VQ
	95B 857 552 BR 9U1	Luxor Beige			+VE,+VH,+VM
	95B 857 552 BR OP2	Saddle Tan			+VN,+VP
	95B 857 552 BR 9U7	Espresso			+VR
(1)	95B 857 552 BS	Sun visor	/R (CH)	1	IL0L/6DQ/6NN
					I9MB
		Alcantara			
	95B 857 552 BS 2W0	Black			+VC,+VJ,+VF,
					+VI,+VU,+VK,

Model: 95B **Model life 2014>>**

Pos	Part Number	Description	Remark	Qty	Model
					+VO,+VX,+VZ
	95B 857 552 BS OU5	Agate Grey			+VD,+VG,+VL, +VQ
	95B 857 552 BS 9U1	Luxor Beige			+VE,+VH,+VM
	95B 857 552 BS OP2	Saddle Tan			+VN,+VP
	95B 857 552 BS 9U7	Espresso			+VR
2	N 105 963 02	Screw M5X25		1	
3	95B 857 561	Bearing Inner		1	
	95B 857 561 1E0	Black			+VC,+VJ,+VF, +VI,+VU,+VK, +VO,+VX,+VZ
	95B 857 561 OP1	Agate Grey			+VD,+VG,+VL, +VQ
	95B 857 561 4H0	Luxor Beige			+VE,+VH,+VM
	95B 857 561 OM8	Saddle Tan			+VN,+VP
	95B 857 561 7N0	Espresso			+VR
4	5G0 858 133 A	Cap		2	
	5G0 858 133 A 1E0	Black			+VC,+VJ,+VF, +VI,+VU,+VK +VO,+VX,+VZ
	5G0 858 133 A OP1	Agate Grey			+VD,+VG,+VL, +VQ
	5G0 858 133 A 4H0	Luxor Beige			+VE,+VH,+VM
	5G0 858 133 A OM8	Saddle Tan			+VN,+VP
	5G0 858 133 A 7N0	Espresso			+VR
5	5G0 857 623 A	Plate for Bearing Outer	/L	1	
(5)	5G0 857 624 A	Plate for Bearing Outer	/R	1	
6	9A7 867 633 00	Clamp		2	

Illustration: 807-80

PORSCHE

Model: 95B **Model life 2014>>**

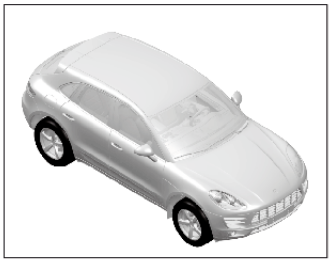

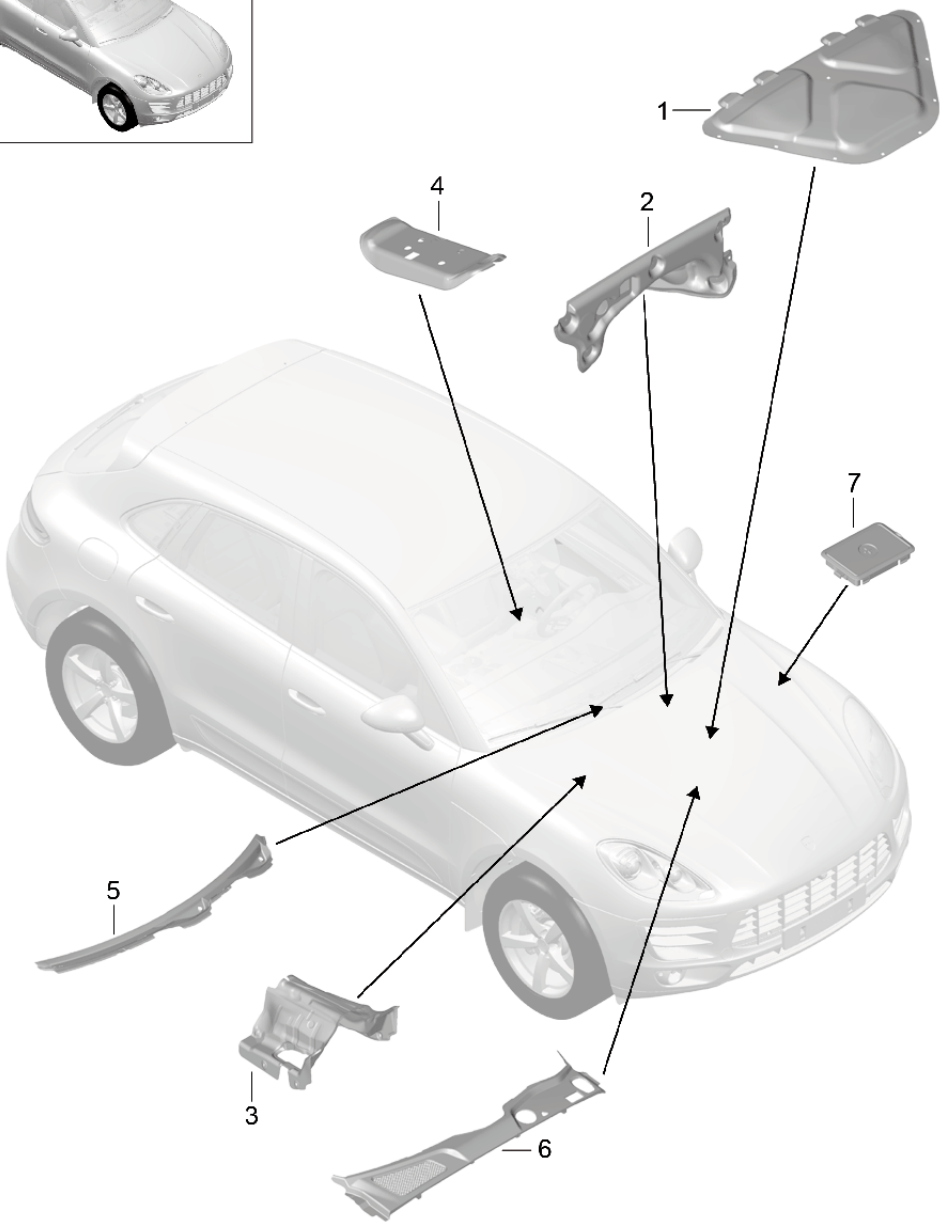

Model: 95B **Model life 2014>>**

Pos	Part Number	Description	Remark	Qty	Model
		Sound absorber			
		Body front section			
		Cover			
1	95B 863 831 A	Sound absorber		1	
		Bonnet			
2	95B 863 829 A	Sound absorber		1	ITQ9/T8I
		Plenum panel	15-		ITQ9/TW6/T8I
3	8R0 803 979 M	Sound absorber		1	IG1D/TF1/TH1
					I0K0
		Tunnel			
4	95B 713 077	Sound absorber		1	IG1D/TQ9/TW6
					IT8I
		Gearshift bracket			
		Outer			
5	95B 819 403 B	Cover		1	IL0L
		Plenum panel			
	95B 819 403 B 1E0	Black			
(5)	95B 819 403 A	Cover	15-	1	IL0R
		Plenum panel			
	95B 819 403 A 1E0	Black			
6	95B 819 447 C	Cover		1	IL0L/0K0
		Plenum panel			
	95B 819 447 C 1E0	Black			
(6)	95B 819 447 B	Cover	15-	1	IL0R
		Plenum panel			
	95B 819 447 B 1E0	Black			
7	95B 819 424	Cover		1	
		Plenum panel			
		Emergency starting			
	95B 819 424 1E0	Black			
-	N 903 350 04	Clamping washer		X	
		S-5X30			
-	N 902 204 02	Clamping washer		4	
		B-10 X 40			
-	1T0 863 727	Retaining clip		9	

Illustration: 807-82

Model: 95B **Model life 2014>>**

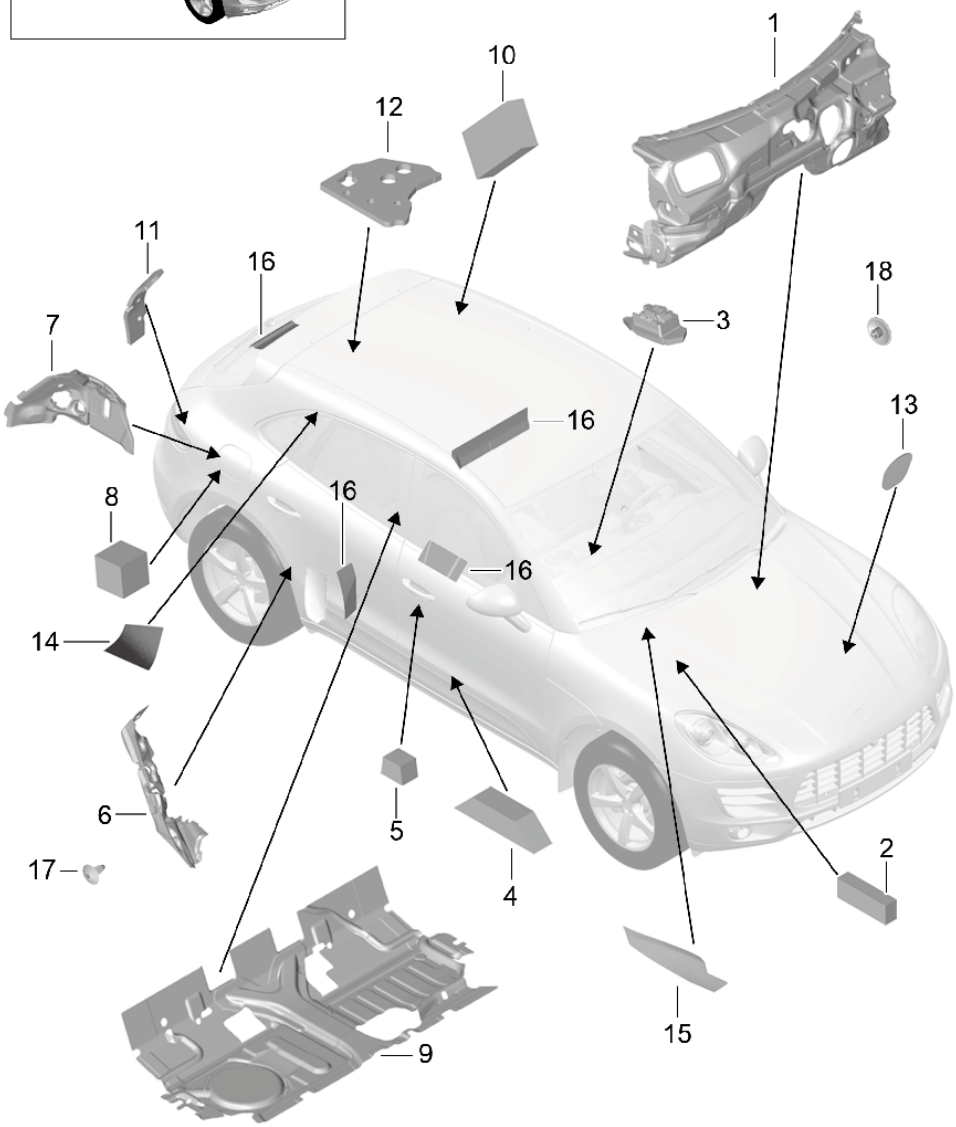

Model: 95B **Model life 2014>>**

Pos	Part Number	Description	Remark	Qty	Model
		Sound absorber Passenger compartment			
1	95B 863 947 B	Sound absorber Firewall Passenger compartment		1	IL0L
(1)	95B 863 947 A	Sound absorber Firewall Passenger compartment	15-	1	IL0R
2	8K0 867 640 A	Foam part A-pillar Lower		1	
3	95B 863 807	Insulation Selector lever		1	IG1D
4	8R0 867 335	Insulation B-pillar Lower		1	
5	8K0 863 501 A	Sound absorber B-pillar Upper		1	
6	95B 864 774	Sound absorber Wheel housing Door sill	/R	1	
(6)	95B 864 773	Sound absorber Wheel housing Door sill	/L	1	
7	95B 863 890	Insulation Wheel housing Luggage compartment	/R	1	
(7)	95B 863 889	Insulation Wheel housing Luggage compartment	/L	1	
8	8E5 864 773	Sound absorber Spring strut Rear	/L /R	1	
9	95B 863 545	Sound absorbing plate Floor Rear Under Seat support		1	
10	95B 863 866	Insulation D-pillar Centre		1	
11	95B 863 862	Insulation D-pillar Lower	/R	1	
(11)	95B 863 861	Insulation D-pillar Lower	/L	1	
12	95B 864 953	Insulation Lateral Bleeding Rear	/L	1	
(12)	95B 864 954	Insulation Lateral Bleeding Rear	/R	1	
13	8K0 863 815	Insulation Steering Hole		1	
14	970 556 513 01	Insulation Side trim panel		1	
15	95B 863 247	Insulation Tunnel	/L	1	

Model: 95B **Model life 2014>>**

Pos	Part Number	Description	Remark	Qty	Model
(15)	95B 863 248	Insulation Tunnel	/R	1	
16	991 556 503 00	Insulation Inner		1	
17	N 902 016 01	Insert part 7,5 X 14,5		3	
18	4A5 853 909	Clips nut		2	

Illustration: 807-84

Model: 95B **Model life 2014>>**

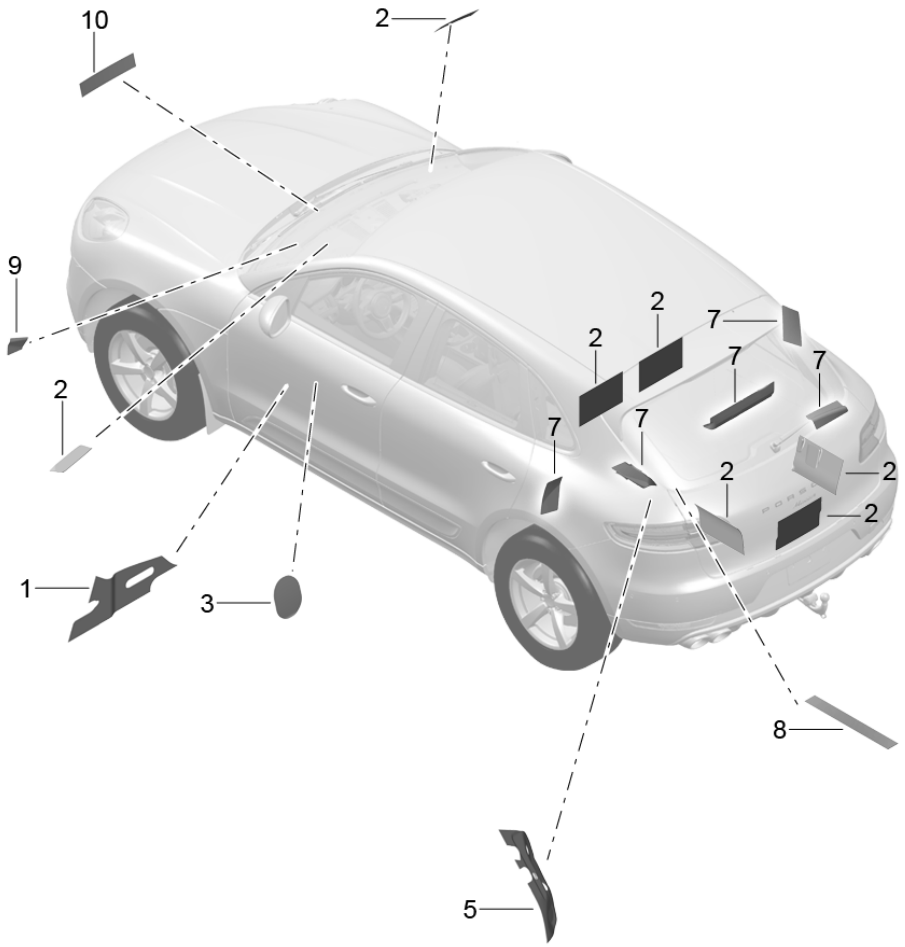

Model: 95B **Model life 2014>>**

Pos	Part Number	Description	Remark	Qty	Model
		Sound absorbing plate			
		Sound absorber			
		General			
		And			
		Rear end			
1	8K0 863 942	Sound absorber		1	IL0L
		Firewall			
		Centre			
(1)	8K2 863 941	Sound absorber	15-	1	IL0R
		Firewall			
		Centre			
2	8E5 863 811	Insulation		6	
		Universal			
		Lateral			
3	8K0 863 815	Insulation		1	
		Hole			
		Steering column			
		Firewall			
5	8R0 863 895 A	Insulation	/L	1	
		Luggage compartment			
(5)	8R0 863 896	Insulation	/R	1	
		Luggage compartment			
7	991 556 503 00	Insulation		1	
		Inner			
8	970 556 543 00	Insulation		1	
		Lock carrier			
		Rear			
9	970 556 545 00	Insulation		4	
		Rear wall			
10	95B 863 591	Insulation		1	
		Cross member			
		Washer			

Illustration: 808-00

PORSCHE

Model: 95B **Model life 2014>>**

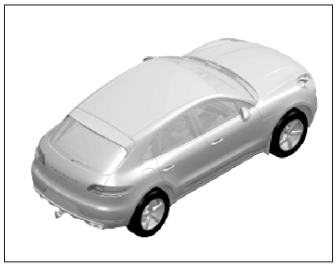

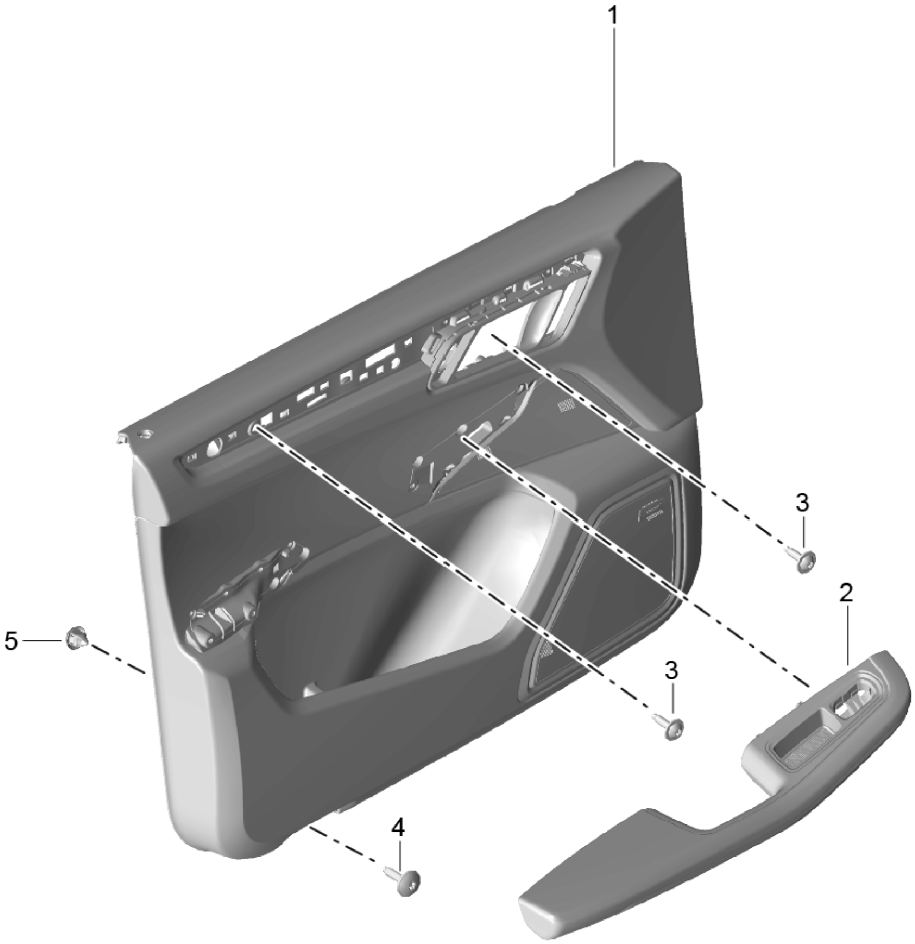

Model: 95B **Model life 2014>>**

Pos	Part Number	Description	Remark	Qty	Model
		Door trim panel Front slush technology			I3LD/3LE
1	95B 867 011 AF	Door trim panel	/L	1	I3L3/3L5/3L6 I3PB/3PE/3PJ I9MA/9VK
	95B 867 011 AF DK4	slush technology Black			+VC,+VJ,+VF, +VI,+VU,+FA
	95B 867 011 AF DM5	Luxor Beige			+VE,+VH,+FC
	95B 867 011 AF OS2	Agate Grey			+VD,+VG,+FB
(1)	95B 867 011 AF	Door trim panel	/L	1	I3L5/3L6/3PB I3PE/3PJ/4AK I4AP/9MA/9VK
	95B 867 011 AF HWO	slush technology Black/Luxor Beige			+VX,+VZ
(1)	95B 867 012 AF	Door trim panel	/R	1	I3L4/3L5/3PB I3PE/3PH/9MA I9VK
	95B 867 012 AF DK4	slush technology Black			+VC,+VJ,+VF, +VI,+VU,+FA
	95B 867 012 AF DM5	Luxor Beige			+VE,+VH,+FC
	95B 867 012 AF OS2	Agate Grey			+VD,+VG,+FB
(1)	95B 867 012 AF	Door trim panel	/R	1	I3L4/3L5/3PB I3PE/3PH/4AK I4AP/9MA/9VK
	95B 867 012 AF HWO	slush technology Black/Luxor Beige			+VX,+VZ
(1)	95B 867 011 AK	Door trim panel	/L	1	I3L4/3PH/3PN I9MA/9VK
	95B 867 011 AK DK4	slush technology Black			+VC,+VJ,+VF, +VI,+VU,+FA
	95B 867 011 AK DM5	Luxor Beige			+VE,+VH,+FC
	95B 867 011 AK OS2	Agate Grey			+VD,+VG,+FB
(1)	95B 867 011 AK	Door trim panel	/L	1	I3L4/3PH/3PN I4AK/4AP/9MA I9VK
	95B 867 011 AK HWO	slush technology Black/Luxor Beige			+VX,+VZ
(1)	95B 867 012 AK	Door trim panel	/R	1	I3L6/3PJ/3PN I9MA/9VK
	95B 867 012 AK DK4	slush technology Black			+VC,+VJ,+VF, +VI,+VU,+FA
	95B 867 012 AK DM5	Luxor Beige			+VE,+VH,+FC
	95B 867 012 AK OS2	Agate Grey			+VD,+VG,+FB
(1)	95B 867 012 AK	Door trim panel	/R	1	I3L6/3PJ/3PN I4AK/4AP/9MA I9VK
	95B 867 012 AK HWO	slush technology Black/Luxor Beige			+VX,+VZ
(1)	95B 867 011 AP	Door trim panel	/L	1	I3L3/3PB/3PE I3PH/3PJ/3PN I9MA/9VL
	95B 867 011 AP DK4	slush technology Black			+VC,+VJ,+VF, +VI,+VU
	95B 867 011 AP DM5	Luxor Beige			+VE,+VH
	95B 867 011 AP OS2	Agate Grey			+VD,+VG
(1)	95B 867 011 AP	Door trim panel	/L	1	I3L5/3L6/3PB I3PE/3PJ/9MA

Model: 95B **Model life 2014>>**

Pos	Part Number	Description	Remark	Qty	Model
					I9VL
		slush technology			
	95B 867 011 AP DK4	Black			+VC,+VJ,+VF,
					+VI,+VU
	95B 867 011 AP DM5	Luxor Beige			+VE,+VH
	95B 867 011 AP OS2	Agate Grey			+VD,+VG
(1)	95B 867 011 AP	Door trim panel	/L	1	I3L5/3L6/3PB
					I3PE/3PJ/4AH
					I9MA/9VL
		slush technology			
	95B 867 011 AP DK4	Black			+VC,+VJ,+VF,
					+VI,+VU,+FA
	95B 867 011 AP DM5	Luxor Beige			+VE,+VH,+FC
	95B 867 011 AP OS2	Agate Grey			+VD,+VG,+FB
(1)	95B 867 011 AP	Door trim panel	/L	1	I3L5/3L6/3PB
					I3PE/3PJ/4AK
					I4AP/9MA/9VL
		slush technology			
	95B 867 011 AP HWO	Black/Luxor Beige			+VX,+VZ
(1)	95B 867 012 AP	Door trim panel	/R	1	I3L3/3L4/3L5
					I3PB/3PE/3PH
					I9MA/9VL
		slush technology			
	95B 867 012 AP DK4	Black			+VC,+VJ,+VF,
					+VI,+VU,+FA
	95B 867 012 AP DM5	Luxor Beige			+VE,+VH,+FC
	95B 867 012 AP OS2	Agate Grey			+VD,+VG,+FB
(1)	95B 867 012 AP	Door trim panel	/R	1	I3L4/3L5/3PB
					I3PE/3PH/4AK
					I4AP/9MA/9VL
		slush technology			
	95B 867 012 AP HWO	Black/Luxor Beige			+VX,+VZ
(1)	95B 867 011 AT	Door trim panel	/L	1	I3L4/3PH/3PN
					I9MA/9VL
		slush technology			
	95B 867 011 AT DK4	Black			+VC,+VJ,+VF,
					+VI,+VU,+FA
	95B 867 011 AT DM5	Luxor Beige			+VE,+VH,+FC
	95B 867 011 AT OS2	Agate Grey			+VD,+VG,+FB
(1)	95B 867 011 AT	Door trim panel	/L	1	I3L4/3PH/3PN
					I4AK/4AP/9MA
					I9VL
		slush technology			
	95B 867 011 AT HWO	Black/Luxor Beige			+VX,+VZ
(1)	95B 867 012 AT	Door trim panel	/R	1	I3L6/3PJ/3PN
					I9MA/9VL
		slush technology			
	95B 867 012 AT DK4	Black			+VC,+VJ,+VF,
					+VI,+VU,+FA
	95B 867 012 AT DM5	Luxor Beige			+VE,+VH,+FC
	95B 867 012 AT OS2	Agate Grey			+VD,+VG,+FB
(1)	95B 867 012 AT	Door trim panel	/R	1	I3L6/3PJ/3PN
					I4AK/4AP/9MA
					I9VL
		slush technology			
	95B 867 012 AT HWO	Black/Luxor Beige			+VX,+VZ
(1)	95B 867 011 BD	Door trim panel	/L	1	I3L3/3L5/3L6
					I3PB/3PE/3PJ
					I9MA/9VJ
		slush technology			
	95B 867 011 BD DK4	Black			+VC,+VJ,+VF,
					+VI,+VU,+FA
	95B 867 011 BD DM5	Luxor Beige			+VE,+VH,+FC

Model: 95B **Model life 2014>>**

Pos	Part Number	Description	Remark	Qty	Model
	95B 867 011 BD OS2	Agate Grey			+VD,+VG,+FB
(1)	95B 867 011 BD	Door trim panel	/L	1	I3L5/3L6/3PB
					I3PE/3PJ/4AK
					I4AP/9MA/9VJ
		slush technology			
	95B 867 011 BD HWO	Black/Luxor Beige			+VX,+VZ
(1)	95B 867 012 BD	Door trim panel	/R	1	I3L3/3L4/3L5
					I3PB/3PE/3PH
					I9MA/9VJ
		slush technology			
	95B 867 012 BD DK4	Black			+VC,+VJ,+VF,
					+VI,+VU,+FA
	95B 867 012 BD DM5	Luxor Beige			+VE,+VH,+FC
	95B 867 012 BD OS2	Agate Grey			+VD,+VG,+FB
(1)	95B 867 012 BD	Door trim panel	/R	1	I3L4/3L5/3PB
					I3PE/3PH/4AK
					I4AP/9MA/9VJ
		slush technology			
	95B 867 012 BD HWO	Black/Luxor Beige			+VX,+VZ
(1)	95B 867 011 BH	Door trim panel	/L	1	I3L4/3PH/3PN
					I9MA/9VJ
		slush technology			
	95B 867 011 BH DK4	Black			+VC,+VJ,+VF,
					+VI,+VU,+FA
	95B 867 011 BH DM5	Luxor Beige			+VE,+VH,+FC
	95B 867 011 BH OS2	Agate Grey			+VD,+VG,+FB
(1)	95B 867 011 BH	Door trim panel	/L	1	I3L4/3PH/3PN
					I4AK/4AP/9MA
					I9VJ
		slush technology			
	95B 867 011 BH HWO	Black/Luxor Beige			+VX,+VZ
(1)	95B 867 012 BH	Door trim panel	/R	1	I3L6/3PJ/3PN
					I9MA/9VJ
		slush technology			
	95B 867 012 BH DK4	Black			+VC,+VJ,+VF,
					+VI,+VU,+FA
	95B 867 012 BH DM5	Luxor Beige			+VE,+VH,+FC
	95B 867 012 BH OS2	Agate Grey			+VD,+VG,+FB
(1)	95B 867 012 BH	Door trim panel	/R	1	I3L6/3PJ/3PN
					I4AK/4AP/9MA
					I9VJ
		slush technology			
	95B 867 012 BH HWO	Black/Luxor Beige			+VX,+VZ
(1)	95B 867 105 AF	Door trim panel	/L	1	I3L3/3L5/3L6
					I3PB/3PE/3PJ
					I9MB/9VK
		slush technology			
	95B 867 105 AF DK4	Black			+VC,+VJ,+VF,
					+VI,+VU,+FA
	95B 867 105 AF DM5	Luxor Beige			+VE,+VH,+FC
	95B 867 105 AF OS2	Agate Grey			+VD,+VG,+FB
(1)	95B 867 105 AF	Door trim panel	/L	1	I3L5/3L6/3PB
					I3PE/3PJ/4AK
					I4AP/9MB/9VK
		slush technology			
	95B 867 105 AF HWO	Black/Luxor Beige			+VX,+VZ
(1)	95B 867 106 AF	Door trim panel	/R	1	I3L3/3L4/3L5
					I3PB/3PE/3PH
					I9MB/9VK
		slush technology			
	95B 867 106 AF DK4	Black			+VC,+VJ,+VF,
					+VI,+VU,+FA
	95B 867 106 AF DM5	Luxor Beige			+VE,+VH,+FC

Model: 95B **Model life 2014>>**

Pos	Part Number	Description	Remark	Qty	Model
	95B 867 106 AF OS2	Agate Grey			+VD,+VG,+FB
(1)	95B 867 106 AF	Door trim panel	/R	1	I3L4/3L5/3PB
					I3PE/3PH/4AK
					I4AP/9MB/9VK
		slush technology			
	95B 867 106 AF HWO	Black/Luxor Beige			+VX,+VZ
(1)	95B 867 105 AK	Door trim panel	/L	1	I3L4/3PH/3PN
					I9MB/9VK
		slush technology			
	95B 867 105 AK DK4	Black			+VC,+VJ,+VF,
					+VI,+VU,+FA
	95B 867 105 AK DM5	Luxor Beige			+VE,+VH,+FC
	95B 867 105 AK OS2	Agate Grey			+VD,+VG,+FB
(1)	95B 867 105 AK	Door trim panel	/L	1	I3L4/3PH/3PN
					I4AK/4AP/9MB
					I9VK
		slush technology			
	95B 867 105 AK HWO	Black/Luxor Beige			+VX,+VZ
(1)	95B 867 106 AK	Door trim panel	/R	1	I3L6/3PJ/3PN
					I9MB/9VK
		slush technology			
	95B 867 106 AK DK4	Black			+VC,+VJ,+VF,
					+VI,+VU,+FA
	95B 867 106 AK DM5	Luxor Beige			+VE,+VH,+FC
	95B 867 106 AK OS2	Agate Grey			+VD,+VG,+FB
(1)	95B 867 106 AK	Door trim panel	/R	1	I3L6/3PJ/3PN
					I4AK/4AP/9MB
					I9VK
		slush technology			
	95B 867 106 AK HWO	Black/Luxor Beige			+VX,+VZ
(1)	95B 867 105 AP	Door trim panel	/L	1	I3L3/3L5/3L6
					I3PB/3PE/3PJ
					I9MB/9VL
		slush technology			
	95B 867 105 AP DK4	Black			+VC,+VJ,+VF,
					+VI,+VU,+FA
	95B 867 105 AP DM5	Luxor Beige			+VE,+VH,+FC
	95B 867 105 AP OS2	Agate Grey			+VD,+VG,+FB
(1)	95B 867 105 AP	Door trim panel	/L	1	I3L5/3L6/3PB
					I3PE/3PJ/4AK
					I4AP/9MB/9VL
		slush technology			
	95B 867 105 AP HWO	Black/Luxor Beige			+VX,+VZ
(1)	95B 867 106 AP	Door trim panel	/R	1	I3L3/3L4/3L5
					I3PB/3PE/3PH
					I9MB/9VL
		slush technology			
	95B 867 106 AP DK4	Black			+VC,+VJ,+VF,
					+VI,+VU,+FA
	95B 867 106 AP DM5	Luxor Beige			+VE,+VH,+FC
	95B 867 106 AP OS2	Agate Grey			+VD,+VG,+FB
(1)	95B 867 106 AP	Door trim panel	/R	1	I3L4/3L5/3PB
					I3PE/3PH/4AK
					I4AP/9MB/9VL
		slush technology			
	95B 867 106 AP HWO	Black/Luxor Beige			+VX,+VZ
(1)	95B 867 105 AT	Door trim panel	/L	1	I3L4/3PH/3PN
					I9MB/9VL
		slush technology			
	95B 867 105 AT DK4	Black			+VC,+VJ,+VF,
					+VI,+VU,+FA
	95B 867 105 AT DM5	Luxor Beige			+VE,+VH,+FC
	95B 867 105 AT OS2	Agate Grey			+VD,+VG,+FB

Model: 95B **Model life 2014>>**

Pos	Part Number	Description	Remark	Qty	Model
(1)	95B 867 105 AT	Door trim panel	/L	1	I3L4/3PH/3PN
					I4AK/4AP/9MB
					I9VL
		slush technology			
	95B 867 105 AT HWO	Black/Luxor Beige			+VX,+VZ
(1)	95B 867 106 AT	Door trim panel	/R	1	I3L6/3PJ/3PN
					I9MB/9VL
		slush technology			
	95B 867 106 AT DK4	Black			+VC,+VJ,+VF,
					+VI,+VU,+FA
	95B 867 106 AT DM5	Luxor Beige			+VE,+VH,+FC
	95B 867 106 AT OS2	Agate Grey			+VD,+VG,+FB
(1)	95B 867 106 AT	Door trim panel	/R	1	I3L6/3PJ/3PN
					I4AK/4AP/9MB
					I9VL
		slush technology			
	95B 867 106 AT HWO	Black/Luxor Beige			+VX,+VZ
(1)	95B 867 105 BD	Door trim panel	/L	1	I3L3/3L5/3L6
					I3PB/3PE/3PJ
					I9MB/9VJ
		slush technology			
	95B 867 105 BD DK4	Black			+VC,+VJ,+VF,
					+VI,+VU,+FA
	95B 867 105 BD DM5	Luxor Beige			+VE,+VH,+FC
	95B 867 105 BD OS2	Agate Grey			+VD,+VG,+FB
(1)	95B 867 105 BD	Door trim panel	/L	1	I3L5/3L6/3PB
					I3PE/3PJ/4AK
					I4AP/9MB/9VJ
		slush technology			
	95B 867 105 BD HWO	Black/Luxor Beige			+VX,+VZ
(1)	95B 867 106 BD	Door trim panel	/R	1	I3L3/3L4/3L5
					I3PB/3PE/3PH
					I9MB/9VJ
		slush technology			
	95B 867 106 BD DK4	Black			+VC,+VJ,+VF,
					+VI,+VU,+FA
	95B 867 106 BD DM5	Luxor Beige			+VE,+VH,+FC
	95B 867 106 BD OS2	Agate Grey			+VD,+VG,+FB
(1)	95B 867 106 BD	Door trim panel	/R	1	I3L4/3L5/3PB
					I3PE/3PH/4AK
					I4AP/9MB/9VJ
		slush technology			
	95B 867 106 BD HWO	Black/Luxor Beige			+VX,+VZ
(1)	95B 867 105 BH	Door trim panel	/L	1	I3L4/3PH/3PN
					I9MB/9VJ
		slush technology			
	95B 867 105 BH DK4	Black			+VC,+VJ,+VF,
					+VI,+VU,+FA
	95B 867 105 BH DM5	Luxor Beige			+VE,+VH,+FC
	95B 867 105 BH OS2	Agate Grey			+VD,+VG,+FB
(1)	95B 867 105 BH	Door trim panel	/L	1	I3L4/3PH/3PN
					I4AK/4AP/9MB
					I9VJ
		slush technology			
	95B 867 105 BH HWO	Black/Luxor Beige			+VX,+VZ
(1)	95B 867 106 BH	Door trim panel	/R	1	I3L6/3PJ/3PN
					I9MB/9VJ
		slush technology			
	95B 867 106 BH DK4	Black			+VC,+VJ,+VF,
					+VI,+VU,+FA
	95B 867 106 BH DM5	Luxor Beige			+VE,+VH,+FC
	95B 867 106 BH OS2	Agate Grey			+VD,+VG,+FB
(1)	95B 867 106 BH	Door trim panel	/R	1	I3L6/3PJ/3PN

Model: 95B **Model life 2014>>**

Pos	Part Number	Description	Remark	Qty	Model
					I4AK/4AP/9MB
					I9VJ
		slush technology			
	95B 867 106 BH HWO	Black/Luxor Beige			+VX,+VZ
2	95B 867 173	Armrest	/LL /L	1	IL0L/3LD
		Leatherette			
	95B 867 173 1D0	Black			+VC
	95B 867 173 2E0	Luxor Beige			+VE,+VX
	95B 867 173 OW7	Agate Grey			+VD
(2)	95B 867 174	Armrest	/LL /R	1	IL0L/3LD
		Leatherette			
	95B 867 174 1D0	Black			+VC
	95B 867 174 2E0	Luxor Beige			+VE,+VX
	95B 867 174 OW7	Agate Grey			+VD
(2)	95B 867 173 C	Armrest	/RL /L	1	IL0R/3LD
		Leatherette			
	95B 867 173 C 1D0	Black			+VC
	95B 867 173 C 2E0	Luxor Beige			+VE,+VX
	95B 867 173 C OW7	Agate Grey			+VD
(2)	95B 867 174 C	Armrest	/RL /R	1	IL0R/3LD
		Leatherette			
	95B 867 174 C 1D0	Black			+VC
	95B 867 174 C 2E0	Luxor Beige			+VE,+VX
	95B 867 174 C OW7	Agate Grey			+VD
(2)	95B 867 173 A	Armrest	/LL /L	1	IL0L/3LE
		Leather package			
	95B 867 173 A A11	Black			+VF
	95B 867 173 A 7J0	Luxor Beige			+VZ,+VH
	95B 867 173 A OA1	Agate Grey			+VG
	95B 867 173 A HAO	Black/Saddle Tan			+VJ
	95B 867 173 A HBO	Black/Carrera Red			+VI,+VU
(2)	95B 867 174 A	Armrest	/LL /R	1	IL0L/3LE
		Leather package			
	95B 867 174 A A11	Black			+VF
	95B 867 174 A 7J0	Luxor Beige			+VZ,+VH
	95B 867 174 A OA1	Agate Grey			+VG
	95B 867 174 A HAO	Black/Saddle Tan			+VJ
	95B 867 174 A HBO	Black/Carrera Red			+VI,+VU
(2)	95B 867 173 D	Armrest	/RL /L	1	IL0R/3LE
		Leather package			
	95B 867 173 D A11	Black			+VF
	95B 867 173 D 7J0	Luxor Beige			+VZ,+VH
	95B 867 173 D OA1	Agate Grey			+VG
	95B 867 173 D HAO	Black/Saddle Tan			+VJ
	95B 867 173 D HBO	Black/Carrera Red			+VI,+VU
(2)	95B 867 174 D	Armrest	/RL /R	1	IL0R/3LE
		Leather package			
	95B 867 174 D A11	Black			+VF
	95B 867 174 D 7J0	Luxor Beige			+VZ,+VH
	95B 867 174 D OA1	Agate Grey			+VG
	95B 867 174 D HAO	Black/Saddle Tan			+VJ
	95B 867 174 D HBO	Black/Carrera Red			+VI,+VU
(2)	95B 867 173 P	Armrest	/LL /L	1	IL0L/3LS/4AH
		Alcantara			
	95B 867 173 P 2W0	Black			+FA
	95B 867 173 P OU5	Agate Grey			+FB
	95B 867 173 P 9U1	Luxor Beige			+FC
(2)	95B 867 174 P	Armrest	/LL /R	1	IL0L/3LS/4AH
		Alcantara			
	95B 867 174 P 2W0	Black			+FA
	95B 867 174 P OU5	Agate Grey			+FB
	95B 867 174 P 9U1	Luxor Beige			+FC
(2)	95B 867 173 Q	Armrest	/RL /L	1	IL0R/3LS/4AH

Model: 95B **Model life 2014>>**

Pos	Part Number	Description	Remark	Qty	Model
		Alcantara			
	95B 867 173 Q 2W0	Black			+FA
	95B 867 173 Q OU5	Agate Grey			+FB
	95B 867 173 Q 9U1	Luxor Beige			+FC
(2)	95B 867 174 Q	Armrest	/RL /R	1	IL0R/3LS/4AH
		Alcantara			
	95B 867 174 Q 2W0	Black			+FA
	95B 867 174 Q OU5	Agate Grey			+FB
	95B 867 174 Q 9U1	Luxor Beige			+FC
3	N 911 809 01	Oval-head screw		2	
		M5X20-W			
4	N 907 758 01	Tapping screw		1	
		ST4,8X19-F			
5	N 106 213 01	Expander nut		1	
		5,0-F			

Illustration: 808-10

Model: 95B **Model life 2014>>**

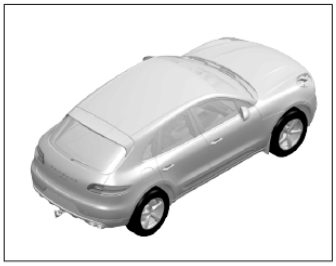

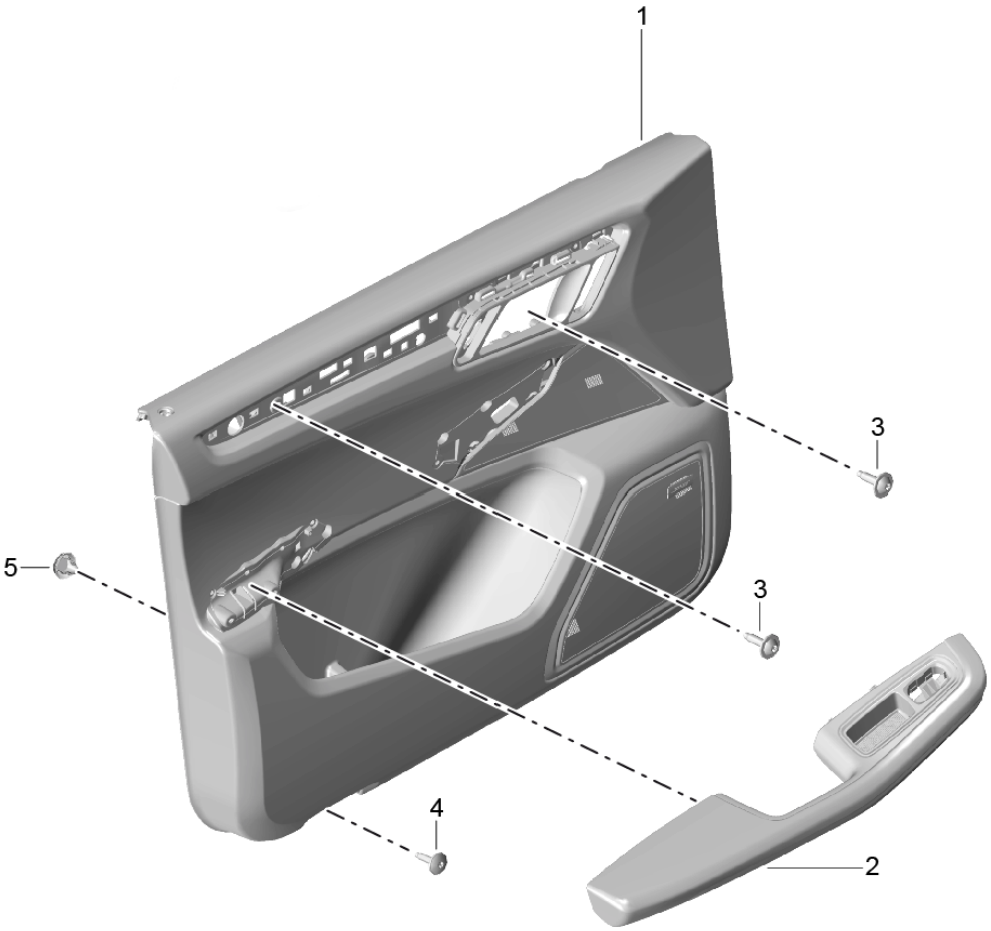

Model: 95B **Model life 2014>>**

Pos	Part Number	Description	Remark	Qty	Model
		Door trim panel			I3LH/3LM
		Front			
		Leather			
1	95B 867 011 BM	Door trim panel	/L	1	I3LH/3L3/3PB
					I3PE/3PJ/8RV
					I9MA/9VK
		Leather			
	95B 867 011 BM A11	Black			+VK
	95B 867 011 BM 7J0	Luxor Beige			+VM
	95B 867 011 BM OA1	Agate Grey			+VL
	95B 867 011 BM OK6	Saddle Tan			+VN
	95B 867 011 BM HHX	Black/Carmine Red			+FN
	95B 867 011 BM HAG	Black/Rhodium Silver			+FK
(1)	95B 867 012 BM	Door trim panel	/R	1	I3LH/3L3/3PB
					I3PE/3PJ/8RV
					I9MA/9VK
		Leather			
	95B 867 012 BM A11	Black			+VK
	95B 867 012 BM 7J0	Luxor Beige			+VM
	95B 867 012 BM OA1	Agate Grey			+VL
	95B 867 012 BM OK6	Saddle Tan			+VN
	95B 867 012 BM HHX	Black/Carmine Red			+FN
	95B 867 012 BM HAG	Black/Rhodium Silver			+FK
(1)	95B 867 011 AH	Door trim panel	/L	1	I3LM/3L3/3PB
					I3PE/3PJ/9MA
					I9VK
		Natural leather			
	95B 867 011 AH 6J0	Espresso			+VR
(1)	95B 867 012 AH	Door trim panel	/R	1	I3LM/3L3/3PB
					I3PE/3PH/9MA
					I9VK
		Natural leather			
	95B 867 012 AH 6J0	Espresso			+VR
(1)	95B 867 011 BN	Door trim panel	/L	1	I3LH/3PH/3PN
					I8RV/9MA/9VK
		Leather			
	95B 867 011 BN A11	Black			+VK
	95B 867 011 BN 7J0	Luxor Beige			+VM
	95B 867 011 BN OA1	Agate Grey			+VL
	95B 867 011 BN OK6	Saddle Tan			+VN
	95B 867 011 BN HHX	Black/Carmine Red			+FN
	95B 867 011 BN HAG	Black/Rhodium Silver			+FK
(1)	95B 867 012 BN	Door trim panel	/R	1	I3LH/3PH/3PN
					I8RV/9MA/9VK
		Leather			
	95B 867 012 BN A11	Black			+VK
	95B 867 012 BN 7J0	Luxor Beige			+VM
	95B 867 012 BN OA1	Agate Grey			+VL
	95B 867 012 BN OK6	Saddle Tan			+VN
	95B 867 012 BN HHX	Black/Carmine Red			+FN
	95B 867 012 BN HAG	Black/Rhodium Silver			+FK
(1)	95B 867 011 AM	Door trim panel	/L	1	I3LM/3PH/3PN
					I9MA/9VK
		Natural leather			
	95B 867 011 AM 6J0	Espresso			+VR
(1)	95B 867 012 AM	Door trim panel	/R	1	I3LM/3PJ/3PN
					I9MA/9VK
		Natural leather			
	95B 867 012 AM 6J0	Espresso			+VR
(1)	95B 867 011 BP	Door trim panel	/L	1	I3LH/3L3/3PB
					I3PE/3PJ/9MA
					I9VL
		Leather			

Model: 95B **Model life 2014>>**

Pos	Part Number	Description	Remark	Qty	Model
	95B 867 011 BP A11	Black			+VK
	95B 867 011 BP 7J0	Luxor Beige			+VM
	95B 867 011 BP OA1	Agate Grey			+VL
	95B 867 011 BP OK6	Saddle Tan			+VN
	95B 867 011 BP HHX	Black/Carmine Red			+FN
	95B 867 011 BP HAG	Black/Rhodium Silver			+FK
(1)	95B 867 012 BP	Door trim panel	/R	1	I3LH/3L3/3PB I3PE/3PJ/9MA I9VL
		Leather			
	95B 867 012 BP A11	Black			+VK
	95B 867 012 BP 7J0	Luxor Beige			+VM
	95B 867 012 BP OA1	Agate Grey			+VL
	95B 867 012 BP OK6	Saddle Tan			+VN
	95B 867 012 BP HHX	Black/Carmine Red			+FN
	95B 867 012 BP HAG	Black/Rhodium Silver			+FK
(1)	95B 867 011 AR	Door trim panel	/L	1	I3LM/3L3/3PB I3PE/3PJ/9MA I9VL
		Natural leather			
	95B 867 011 AR 6J0	Espresso			+VR
(1)	95B 867 012 AR	Door trim panel	/R	1	I3LM/3L3/3PB I3PE/3PH/9MA I9VL
		Natural leather			
	95B 867 012 AR 6J0	Espresso			+VR
(1)	95B 867 011 BQ	Door trim panel	/L	1	I3LH/3PH/3PN I9MA/9VL
		Leather			
	95B 867 011 BQ A11	Black			+VK
	95B 867 011 BQ 7J0	Luxor Beige			+VM
	95B 867 011 BQ OA1	Agate Grey			+VL
	95B 867 011 BQ OK6	Saddle Tan			+VN
	95B 867 011 BQ HHX	Black/Carmine Red			+FN
	95B 867 011 BQ HAG	Black/Rhodium Silver			+FK
(1)	95B 867 012 BQ	Door trim panel	/R	1	I3LH/3PH/3PN I9MA/9VL
		Leather			
	95B 867 012 BQ A11	Black			+VK
	95B 867 012 BQ 7J0	Luxor Beige			+VM
	95B 867 012 BQ OA1	Agate Grey			+VL
	95B 867 012 BQ OK6	Saddle Tan			+VN
	95B 867 012 BQ HHX	Black/Carmine Red			+FN
	95B 867 012 BQ HAG	Black/Rhodium Silver			+FK
(1)	95B 867 011 BB	Door trim panel	/L	1	I3LM/3PH/3PN I9MA/9VL
		Natural leather			
	95B 867 011 BB 6J0	Espresso			+VR
(1)	95B 867 012 BB	Door trim panel	/R	1	I3LM/3PJ/3PN I9MA/9VL
		Natural leather			
	95B 867 012 BB 6J0	Espresso			+VR
(1)	95B 867 011 BE	Door trim panel	/L	1	I3LH/3L3/3PB I3PE/3PJ/9MA I9VJ
		Leather			
	95B 867 011 BE A11	Black			+VK
	95B 867 011 BE 7J0	Luxor Beige			+VM
	95B 867 011 BE OA1	Agate Grey			+VL
	95B 867 011 BE OK6	Saddle Tan			+VN
(1)	95B 867 011 BR	Door trim panel	/L	1	I3LH/3L3/3PB I3PE/3PJ/9MA I9VJ

Model: 95B **Model life 2014>>**

Pos	Part Number	Description	Remark	Qty	Model
		Leather			
	95B 867 011 BR A11	Black			+VK
	95B 867 011 BR 7J0	Luxor Beige			+VM
	95B 867 011 BR OA1	Agate Grey			+VL
	95B 867 011 BR OK6	Saddle Tan			+VN
	95B 867 011 BR HHX	Black/Carmine Red			+FN
	95B 867 011 BR HAG	Black/Rhodium Silver			+FK
(1)	95B 867 012 BR	Door trim panel	/R	1	I3LH/3L3/3PB I3PE/3PJ/9MA I9VJ
		Leather			
	95B 867 012 BR A11	Black			+VK
	95B 867 012 BR 7J0	Luxor Beige			+VM
	95B 867 012 BR OA1	Agate Grey			+VL
	95B 867 012 BR OK6	Saddle Tan			+VN
	95B 867 012 BR HHX	Black/Carmine Red			+FN
	95B 867 012 BR HAG	Black/Rhodium Silver			+FK
(1)	95B 867 011 BF	Door trim panel	/L	1	I3LM/3L3/3PB I3PE/3PJ/9MA I9VJ
		Natural leather			
	95B 867 011 BF 6J0	Espresso			+VR
(1)	95B 867 012 BF	Door trim panel	/R	1	I3LM/3L3/3PB I3PE/3PH/9MA I9VJ
		Natural leather			
	95B 867 012 BF 6J0	Espresso			+VR
(1)	95B 867 011 BS	Door trim panel	/L	1	I3LH/3PH/3PN I9MA/9VJ
		Leather			
	95B 867 011 BS A11	Black			+VK
	95B 867 011 BS 7J0	Luxor Beige			+VM
	95B 867 011 BS OA1	Agate Grey			+VL
	95B 867 011 BS OK6	Saddle Tan			+VN
	95B 867 011 BS HHX	Black/Carmine Red			+FN
	95B 867 011 BS HAG	Black/Rhodium Silver			+FK
(1)	95B 867 012 BS	Door trim panel	/R	1	I3LH/3PH/3PN I9MA/9VJ
		Leather			
	95B 867 012 BS A11	Black			+VK
	95B 867 012 BS 7J0	Luxor Beige			+VM
	95B 867 012 BS OA1	Agate Grey			+VL
	95B 867 012 BS OK6	Saddle Tan			+VN
	95B 867 012 BS HHX	Black/Carmine Red			+FN
	95B 867 012 BS HAG	Black/Rhodium Silver			+FK
(1)	95B 867 011 BK	Door trim panel	/L	1	I3LM/3PH/3PN I9MA/9VJ
		Natural leather			
	95B 867 011 BK 6J0	Espresso			+VR
(1)	95B 867 012 BK	Door trim panel	/R	1	I3LM/3PJ/3PN I9MA/9VJ
		Natural leather			
	95B 867 012 BK 6J0	Espresso			+VR
(1)	95B 867 105 BM	Door trim panel	/L	1	I3LH/3L3/3PB I3PE/3PJ/8RV I9MB/9VK
		Leather			
	95B 867 105 BM A11	Black			+VK
	95B 867 105 BM 7J0	Luxor Beige			+VM
	95B 867 105 BM OA1	Agate Grey			+VL
	95B 867 105 BM OK6	Saddle Tan			+VN
	95B 867 105 BM HHX	Black/Carmine Red			+FN
	95B 867 105 BM HAG	Black/Rhodium Silver			+FK

Model: 95B **Model life 2014>>**

Pos	Part Number	Description	Remark	Qty	Model
(1)	95B 867 106 BM	Door trim panel	/R	1	I3LH/3L4/3L5 I3PB/3PE/3PH I9MB/9VK
		Leather			
	95B 867 106 BM A11	Black			+VK
	95B 867 106 BM 7J0	Luxor Beige			+VM
	95B 867 106 BM OA1	Agate Grey			+VL
	95B 867 106 BM OK6	Saddle Tan			+VN
	95B 867 106 BM HHX	Black/Carmine Red			+FN
	95B 867 106 BM HAG	Black/Rhodium Silver			+FK
(1)	95B 867 105 AH	Door trim panel	/L	1	I3LM/3L3/3PB I3PE/3PJ/9MB I9VK
		Natural leather			
	95B 867 105 AH 6J0	Espresso			+VR
(1)	95B 867 106 AH	Door trim panel	/R	1	I3LM/3L3/3PB I3PE/3PH/9MB I9VK
		Natural leather			
	95B 867 106 AH 6J0	Espresso			+VR
(1)	95B 867 105 BN	Door trim panel	/L	1	I3LH/3PH/3PN I8RV/9MB/9VK
		Leather			
	95B 867 105 BN A11	Black			+VK
	95B 867 105 BN 7J0	Luxor Beige			+VM
	95B 867 105 BN OA1	Agate Grey			+VL
	95B 867 105 BN OK6	Saddle Tan			+VN
	95B 867 105 BN HHX	Black/Carmine Red			+FN
	95B 867 105 BN HAG	Black/Rhodium Silver			+FK
(1)	95B 867 106 BN	Door trim panel	/R	1	I3LH/3L6/3PJ I3PN/9MB/9VK
		Leather			
	95B 867 106 BN A11	Black			+VK
	95B 867 106 BN 7J0	Luxor Beige			+VM
	95B 867 106 BN OA1	Agate Grey			+VL
	95B 867 106 BN OK6	Saddle Tan			+VN
	95B 867 106 BN HHX	Black/Carmine Red			+FN
	95B 867 106 BN HAG	Black/Rhodium Silver			+FK
(1)	95B 867 105 AM	Door trim panel	/L	1	I3LM/3PH/3PN I9MB/9VK
		Natural leather			
	95B 867 105 AM 6J0	Espresso			+VR
(1)	95B 867 106 AM	Door trim panel	/R	1	I3LM/3PJ/3PN I9MB/9VK
		Natural leather			
	95B 867 106 AM 6J0	Espresso			+VR
(1)	95B 867 105 BP	Door trim panel	/L	1	I3LH/3L3/3PB I3PE/3PJ/9MB I9VL
		Leather			
	95B 867 105 BP A11	Black			+VK
	95B 867 105 BP 7J0	Luxor Beige			+VM
	95B 867 105 BP OA1	Agate Grey			+VL
	95B 867 105 BP OK6	Saddle Tan			+VN
	95B 867 105 BP HHX	Black/Carmine Red			+FN
	95B 867 105 BP HAG	Black/Rhodium Silver			+FK
(1)	95B 867 106 BP	Door trim panel	/R	1	I3LH/3L3/3PB I3PE/3PJ/9MB I9VL
		Leather			
	95B 867 106 BP A11	Black			+VK
	95B 867 106 BP 7J0	Luxor Beige			+VM
	95B 867 106 BP OA1	Agate Grey			+VL

Model: 95B **Model life 2014>>**

Pos	Part Number	Description	Remark	Qty	Model
	95B 867 106 BP OK6	Saddle Tan			+VN
	95B 867 106 BP HHX	Black/Carmine Red			+FN
	95B 867 106 BP HAG	Black/Rhodium Silver			+FK
(1)	95B 867 105 AR	Door trim panel	/L	1	I3LM/3L3/3PB
					I3PE/3PJ/9MB
					I9VL
		Natural leather			
	95B 867 105 AR 6J0	Espresso			+VR
(1)	95B 867 106 AR	Door trim panel	/R	1	I3LM/3L3/3PB
					I3PE/3PH/9MB
					I9VL
		Natural leather			
	95B 867 106 AR 6J0	Espresso			+VR
(1)	95B 867 105 BQ	Door trim panel	/L	1	I3LH/3PH/3PN
					I9MB/9VL
		Leather			
	95B 867 105 BQ A11	Black			+VK
	95B 867 105 BQ 7J0	Luxor Beige			+VM
	95B 867 105 BQ OA1	Agate Grey			+VL
	95B 867 105 BQ OK6	Saddle Tan			+VN
	95B 867 105 BQ HHX	Black/Carmine Red			+FN
	95B 867 105 BQ HAG	Black/Rhodium Silver			+FK
(1)	95B 867 106 BQ	Door trim panel	/R	1	I3LH/3PH/3PN
					I9MB/9VL
		Leather			
	95B 867 106 BQ A11	Black			+VK
	95B 867 106 BQ 7J0	Luxor Beige			+VM
	95B 867 106 BQ OA1	Agate Grey			+VL
	95B 867 106 BQ OK6	Saddle Tan			+VN
	95B 867 106 BQ HHX	Black/Carmine Red			+FN
	95B 867 106 BQ HAG	Black/Rhodium Silver			+FK
(1)	95B 867 105 BB	Door trim panel	/L	1	I3LM/3PH/3PN
					I9MB/9VL
		Natural leather			
	95B 867 105 BB 6J0	Espresso			+VR
(1)	95B 867 106 BB	Door trim panel	/R	1	I3LM/3PJ/3PN
					I9MB/9VL
		Natural leather			
	95B 867 106 BB 6J0	Espresso			+VR
(1)	95B 867 105 BR	Door trim panel	/L	1	I3LH/3L3/3PB
					I3PE/3PH/9MB
					I9VJ
		Leather			
	95B 867 105 BR A11	Black			+VK
	95B 867 105 BR 7J0	Luxor Beige			+VM
	95B 867 105 BR OA1	Agate Grey			+VL
	95B 867 105 BR OK6	Saddle Tan			+VN
	95B 867 105 BR HHX	Black/Carmine Red			+FN
	95B 867 105 BR HAG	Black/Rhodium Silver			+FK
(1)	95B 867 106 BR	Door trim panel	/R	1	I3LH/3L3/3PB
					I3PE/3PH/9MB
					I9VJ
		Leather			
	95B 867 106 BR A11	Black			+VK
	95B 867 106 BR 7J0	Luxor Beige			+VM
	95B 867 106 BR OA1	Agate Grey			+VL
	95B 867 106 BR OK6	Saddle Tan			+VN
	95B 867 106 BR HHX	Black/Carmine Red			+FN
	95B 867 106 BR HAG	Black/Rhodium Silver			+FK
(1)	95B 867 105 BF	Door trim panel	/L	1	I3LM/3L3/3PB
					I3PE/3PJ/9MB
					I9VJ
		Natural leather			

Model: 95B **Model life 2014>>**

Pos	Part Number	Description	Remark	Qty	Model
	95B 867 105 BF 6J0	Espresso			+VR
(1)	95B 867 106 BF	Door trim panel	/R	1	I3LM/3L3/3PB
					I3PE/3PH/9MB
					I9VJ
		Natural leather			
	95B 867 106 BF 6J0	Espresso			+VR
(1)	95B 867 105 BS	Door trim panel	/L	1	I3LH/3PH/3PN
					I9MB/9VJ
		Leather			
	95B 867 105 BS A11	Black			+VK
	95B 867 105 BS 7J0	Luxor Beige			+VM
	95B 867 105 BS OA1	Agate Grey			+VL
	95B 867 105 BS OK6	Saddle Tan			+VN
	95B 867 105 BS HHX	Black/Carmine Red			+FN
	95B 867 105 BS HAG	Black/Rhodium Silver			+FK
(1)	95B 867 106 BS	Door trim panel	/R	1	I3LH/3PH/3PN
					I9MB/9VJ
		Leather			
	95B 867 106 BS A11	Black			+VK
	95B 867 106 BS 7J0	Luxor Beige			+VM
	95B 867 106 BS OA1	Agate Grey			+VL
	95B 867 106 BS OK6	Saddle Tan			+VN
	95B 867 106 BS HHX	Black/Carmine Red			+FN
	95B 867 106 BS HAG	Black/Rhodium Silver			+FK
(1)	95B 867 105 BK	Door trim panel	/L	1	I3LM/3PH/3PN
					I9MB/9VJ
		Natural leather			
	95B 867 105 BK 6J0	Espresso			+VR
(1)	95B 867 106 BK	Door trim panel	/R	1	I3LM/3PH/3PN
					I9MB/9VJ
		Natural leather			
	95B 867 106 BK 6J0	Espresso			+VR
2	95B 867 173 A	Armrest	/LL /L	1	IL0L/3LH
		Leather			
	95B 867 173 A A11	Black			+VK
	95B 867 173 A 7J0	Luxor Beige			+VM,+VZ
	95B 867 173 A OA1	Agate Grey			+VL
	95B 867 173 A OK6	Saddle Tan			+VN
	95B 867 173 A HHX	Black/Carmine Red			+FN
	95B 867 173 A HAG	Black/Rhodium Silver			+FK
2	95B 867 174 A	Armrest	/LL /R	1	IL0L/3LH
		Leather			
	95B 867 174 A A11	Black			+VK
	95B 867 174 A 7J0	Luxor Beige			+VM,+VZ
	95B 867 174 A OA1	Agate Grey			+VL
	95B 867 174 A OK6	Saddle Tan			+VN
	95B 867 174 A HHX	Black/Carmine Red			+FN
	95B 867 174 A HAG	Black/Rhodium Silver			+FK
(2)	95B 867 173 D	Armrest	/RL /L	1	IL0R/3LH
		Leather			
	95B 867 173 D A11	Black			+VK
	95B 867 173 D 7J0	Luxor Beige			+VM,+VZ
	95B 867 173 D OA1	Agate Grey			+VL
	95B 867 173 D OK6	Saddle Tan			+VN
	95B 867 173 D HHX	Black/Carmine Red			+FN
	95B 867 173 D HAG	Black/Rhodium Silver			+FK
(2)	95B 867 174 D	Armrest	/RL /R	1	IL0R/3LH
		Leather			
	95B 867 174 D A11	Black			+VK
	95B 867 174 D 7J0	Luxor Beige			+VM,+VZ
	95B 867 174 D OA1	Agate Grey			+VL
	95B 867 174 D OK6	Saddle Tan			+VN
	95B 867 174 D HHX	Black/Carmine Red			+FN

Model: 95B **Model life 2014>>**

Pos	Part Number	Description	Remark	Qty	Model
	95B 867 174 D HAG	Black/Rhodium Silver			+FK
(2)	95B 867 173 B	Armrest Leather Nature	/L	1	IL0L/3LM
	95B 867 173 B 6J0	Espresso			+VR
(2)	95B 867 174 B	Armrest Leather Nature	/R	1	IL0L/3LM
	95B 867 174 B 6J0	Espresso			+VR
(2)	95B 867 173 E	Armrest Leather Nature	/L	1	IL0R/3LM
	95B 867 173 E 6J0	Espresso			+VR
(2)	95B 867 174 E	Armrest Leather Nature	/R	1	IL0R/3LM
	95B 867 174 E 6J0	Espresso			+VR
3	N 911 809 01	Oval-head screw M5X20-W		2	
4	N 907 758 01	Tapping screw ST4,8X19-F		1	
5	N 106 213 01	Expander nut 5,0-F		1	

Illustration: 808-20

PORSCHE

Model: 95B **Model life 2014>>**

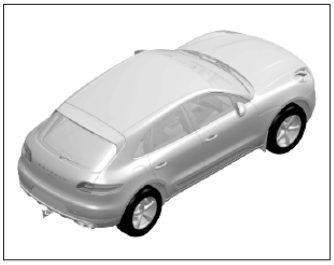

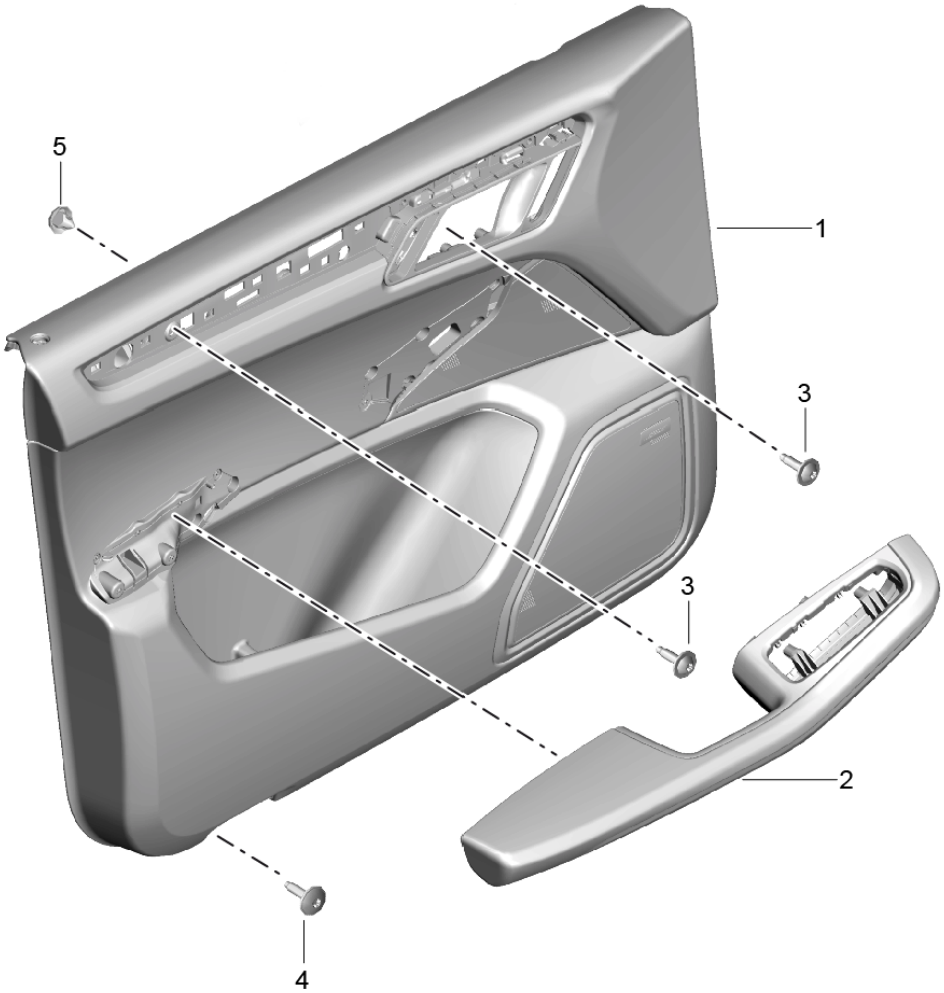

Model: 95B **Model life 2014>>**

Pos	Part Number	Description	Remark	Qty	Model
		Door trim panel			I3LT
		Front			
		Leather			
		two-colour			
1	95B 867 011 AJ	Door trim panel	/L	1	I3LT/3L3/3PB
					I3PE/3PJ/9MA
					I9VK
		Leather			
		two-colour			
	95B 867 011 AJ CDR	Black/Carrera Red			+VO
	95B 867 011 AJ CDS	Agate Grey/Pebble Grey			+VQ
	95B 867 011 AJ CDT	Saddle Tan/Luxor Beige			+VP
(1)	95B 867 012 AJ	Door trim panel	/R	1	I3LT/3L3/3PB
					I3PE/3PH/9MA
					I9VK
		Leather			
		two-colour			
	95B 867 012 AJ CDR	Black/Carrera Red			+VO
	95B 867 012 AJ CDS	Agate Grey/Pebble Grey			+VQ
	95B 867 012 AJ CDT	Saddle Tan/Luxor Beige			+VP
(1)	95B 867 011 AN	Door trim panel	/L	1	I3LT/3PH/3PN
					I9MA/9VK
		Leather			
		two-colour			
	95B 867 011 AN CDR	Black/Carrera Red			+VO
	95B 867 011 AN CDS	Agate Grey/Pebble Grey			+VQ
	95B 867 011 AN CDT	Saddle Tan/Luxor Beige			+VP
(1)	95B 867 012 AN	Door trim panel	/R	1	I3LT/3PJ/3PN
					I9MA/9VK
		Leather			
		two-colour			
	95B 867 012 AN CDR	Black/Carrera Red			+VO
	95B 867 012 AN CDS	Agate Grey/Pebble Grey			+VQ
	95B 867 012 AN CDT	Saddle Tan/Luxor Beige			+VP
(1)	95B 867 011 AS	Door trim panel	/L	1	I3LT/3L3/3PB
					I3PE/3PJ/9MA
					I9VL
		Leather			
		two-colour			
	95B 867 011 AS CDR	Black/Carrera Red			+VO
	95B 867 011 AS CDS	Agate Grey/Pebble Grey			+VQ
	95B 867 011 AS CDT	Saddle Tan/Luxor Beige			+VP
(1)	95B 867 012 AS	Door trim panel	/R	1	I3LT/3L3/3PB
					I3PE/3PH/9MA
					I9VL
		Leather			
		two-colour			
	95B 867 012 AS CDR	Black/Carrera Red			+VO
	95B 867 012 AS CDS	Agate Grey/Pebble Grey			+VQ
	95B 867 012 AS CDT	Saddle Tan/Luxor Beige			+VP
(1)	95B 867 011 BC	Door trim panel	/L	1	I3LT/3PH/3PN
					I9MA/9VL
		Leather			
		two-colour			
	95B 867 011 BC CDR	Black/Carrera Red			+VO
	95B 867 011 BC CDS	Agate Grey/Pebble Grey			+VQ
	95B 867 011 BC CDT	Saddle Tan/Luxor Beige			+VP
(1)	95B 867 012 BC	Door trim panel	/R	1	I3LT/3PJ/3PN
					I9MA/9VL
		Leather			
		two-colour			
	95B 867 012 BC CDR	Black/Carrera Red			+VO
	95B 867 012 BC CDS	Agate Grey/Pebble Grey			+VQ

Model: 95B **Model life 2014>>**

Pos	Part Number	Description	Remark	Qty	Model
	95B 867 012 BC CDT	Saddle Tan/Luxor Beige			+VP
(1)	95B 867 011 BG	Door trim panel	/L	1	I3LT/3L3/3PB
					I3PE/3PJ/9MA
					I9VJ
		Leather			
		two-colour			
	95B 867 011 BG CDR	Black/Carrera Red			+VO
	95B 867 011 BG CDS	Agate Grey/Pebble Grey			+VQ
	95B 867 011 BG CDT	Saddle Tan/Luxor Beige			+VP
(1)	95B 867 012 BG	Door trim panel	/R	1	I3LT/3L3/3PB
					I3PE/3PH/9MA
					I9VJ
		Leather			
		two-colour			
	95B 867 012 BG CDR	Black/Carrera Red			+VO
	95B 867 012 BG CDS	Agate Grey/Pebble Grey			+VQ
	95B 867 012 BG CDT	Saddle Tan/Luxor Beige			+VP
(1)	95B 867 011 BL	Door trim panel	/L	1	I3LT/3PH/3PN
					I9MA/9VJ
		Leather			
		two-colour			
	95B 867 011 BL CDR	Black/Carrera Red			+VO
	95B 867 011 BL CDS	Agate Grey/Pebble Grey			+VQ
	95B 867 011 BL CDT	Saddle Tan/Luxor Beige			+VP
(1)	95B 867 012 BL	Door trim panel	/R	1	I3LT/3PJ/3PN
					I9MA/9VJ
		Leather			
		two-colour			
	95B 867 012 BL CDR	Black/Carrera Red			+VO
	95B 867 012 BL CDS	Agate Grey/Pebble Grey			+VQ
	95B 867 012 BL CDT	Saddle Tan/Luxor Beige			+VP
(1)	95B 867 105 AJ	Door trim panel	/L	1	I3LT/3L3/3PB
					I3PE/3PJ/9MB
					I9VK
		Leather			
		two-colour			
	95B 867 105 AJ CDR	Black/Carrera Red			+VO
	95B 867 105 AJ CDS	Agate Grey/Pebble Grey			+VQ
	95B 867 105 AJ CDT	Saddle Tan/Luxor Beige			+VP
(1)	95B 867 106 AJ	Door trim panel	/R	1	I3LT/3L3/3PB
					I3PE/3PH/9MB
					I9VK
		Leather			
		two-colour			
	95B 867 106 AJ CDR	Black/Carrera Red			+VO
	95B 867 106 AJ CDS	Agate Grey/Pebble Grey			+VQ
	95B 867 106 AJ CDT	Saddle Tan/Luxor Beige			+VP
(1)	95B 867 105 AN	Door trim panel	/L	1	I3LT/3PH/3PN
					I9MB/9VK
		Leather			
		two-colour			
	95B 867 105 AN CDR	Black/Carrera Red			+VO
	95B 867 105 AN CDS	Agate Grey/Pebble Grey			+VQ
	95B 867 105 AN CDT	Saddle Tan/Luxor Beige			+VP
(1)	95B 867 106 AN	Door trim panel	/R	1	I3LT/3PJ/3PN
					I9MB/9VK
		Leather			
		two-colour			
	95B 867 106 AN CDR	Black/Carrera Red			+VO
	95B 867 106 AN CDS	Agate Grey/Pebble Grey			+VQ
	95B 867 106 AN CDT	Saddle Tan/Luxor Beige			+VP
(1)	95B 867 105 AS	Door trim panel	/L	1	I3LT/3L3/3PB
					I3PE/3PJ/9MB

Model: 95B **Model life 2014>>**

Pos	Part Number	Description	Remark	Qty	Model
					I9VL
		Leather			
		two-colour			
	95B 867 105 AS CDR	Black/Carrera Red			+VO
	95B 867 105 AS CDS	Agate Grey/Pebble Grey			+VQ
	95B 867 105 AS CDT	Saddle Tan/Luxor Beige			+VP
(1)	95B 867 106 AS	Door trim panel	/R	1	I3LT/3L3/3PB
					I3PE/3PH/9MB
					I9VL
		Leather			
		two-colour			
	95B 867 106 AS CDR	Black/Carrera Red			+VO
	95B 867 106 AS CDS	Agate Grey/Pebble Grey			+VQ
	95B 867 106 AS CDT	Saddle Tan/Luxor Beige			+VP
(1)	95B 867 105 BC	Door trim panel	/L	1	I3LT/3PH/3PN
					I9MB/9VL
		Leather			
		two-colour			
	95B 867 105 BC CDR	Black/Carrera Red			+VO
	95B 867 105 BC CDS	Agate Grey/Pebble Grey			+VQ
	95B 867 105 BC CDT	Saddle Tan/Luxor Beige			+VP
(1)	95B 867 106 BC	Door trim panel	/R	1	I3LT/3PJ/3PN
					I9MB/9VL
		Leather			
		two-colour			
	95B 867 106 BC CDR	Black/Carrera Red			+VO
	95B 867 106 BC CDS	Agate Grey/Pebble Grey			+VQ
	95B 867 106 BC CDT	Saddle Tan/Luxor Beige			+VP
(1)	95B 867 105 BG	Door trim panel	/L	1	I3LT/3L3/3PB
					I3PE/3PJ/9MB
					I9VJ
		Leather			
		two-colour			
	95B 867 105 BG CDR	Black/Carrera Red			+VO
	95B 867 105 BG CDS	Agate Grey/Pebble Grey			+VQ
	95B 867 105 BG CDT	Saddle Tan/Luxor Beige			+VP
(1)	95B 867 106 BG	Door trim panel	/R	1	I3LT/3L3/3PB
					I3PE/3PH/9MB
					I9VJ
		Leather			
		two-colour			
	95B 867 106 BG CDR	Black/Carrera Red			+VO
	95B 867 106 BG CDS	Agate Grey/Pebble Grey			+VQ
	95B 867 106 BG CDT	Saddle Tan/Luxor Beige			+VP
(1)	95B 867 105 BL	Door trim panel	/L	1	I3LT/3PH/3PN
					I9MB/9VJ
		Leather			
		two-colour			
	95B 867 105 BL CDR	Black/Carrera Red			+VO
	95B 867 105 BL CDS	Agate Grey/Pebble Grey			+VQ
	95B 867 105 BL CDT	Saddle Tan/Luxor Beige			+VP
(1)	95B 867 106 BL	Door trim panel	/R	1	I3LT/3PJ/3PN
					I9MB/9VJ
		Leather			
		two-colour			
	95B 867 106 BL CDR	Black/Carrera Red			+VO
	95B 867 106 BL CDS	Agate Grey/Pebble Grey			+VQ
	95B 867 106 BL CDT	Saddle Tan/Luxor Beige			+VP
2	95B 867 173 A	Armrest	/L	1	IL0L
		Front			
		two-colour			
	95B 867 173 A OG3	Carrera Red			+VO
	95B 867 173 A OD4	Pebble Grey			+VQ

Model: 95B **Model life 2014>>**

Pos	Part Number	Description	Remark	Qty	Model
	95B 867 173 A 7J0	Luxor Beige			+VH,+VM,+VP, +VZ
(2)	95B 867 174 A	Armrest Rear two-colour	/R	1	IL0L
	95B 867 174 A OG3	Carrera Red			+VO
	95B 867 174 A OD4	Pebble Grey			+VQ
	95B 867 174 A 7J0	Luxor Beige			+VH,+VM,+VP, +VZ
(2)	95B 867 173 D	Armrest Rear two-colour	/L	1	IL0R
	95B 867 173 D OG3	Carrera Red			+VO
	95B 867 173 D OD4	Pebble Grey			+VQ
	95B 867 173 D 7J0	Luxor Beige			+VH,+VM,+VP, +VZ
(2)	95B 867 174 D	Armrest Rear two-colour	/R	1	IL0R
	95B 867 174 D OG3	Carrera Red			+VO
	95B 867 174 D OD4	Pebble Grey			+VQ
	95B 867 174 D 7J0	Luxor Beige			+VH,+VM,+VP, +VZ
3	N 911 809 01	Oval-head screw M5X20-W		2	
4	N 907 758 01	Tapping screw ST4,8X19-F		1	
5	N 106 213 01	Expander nut 5,0-F		1	

Illustration: 808-30

PORSCHE

Model: 95B **Model life 2014>>**

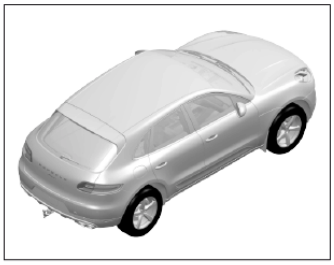

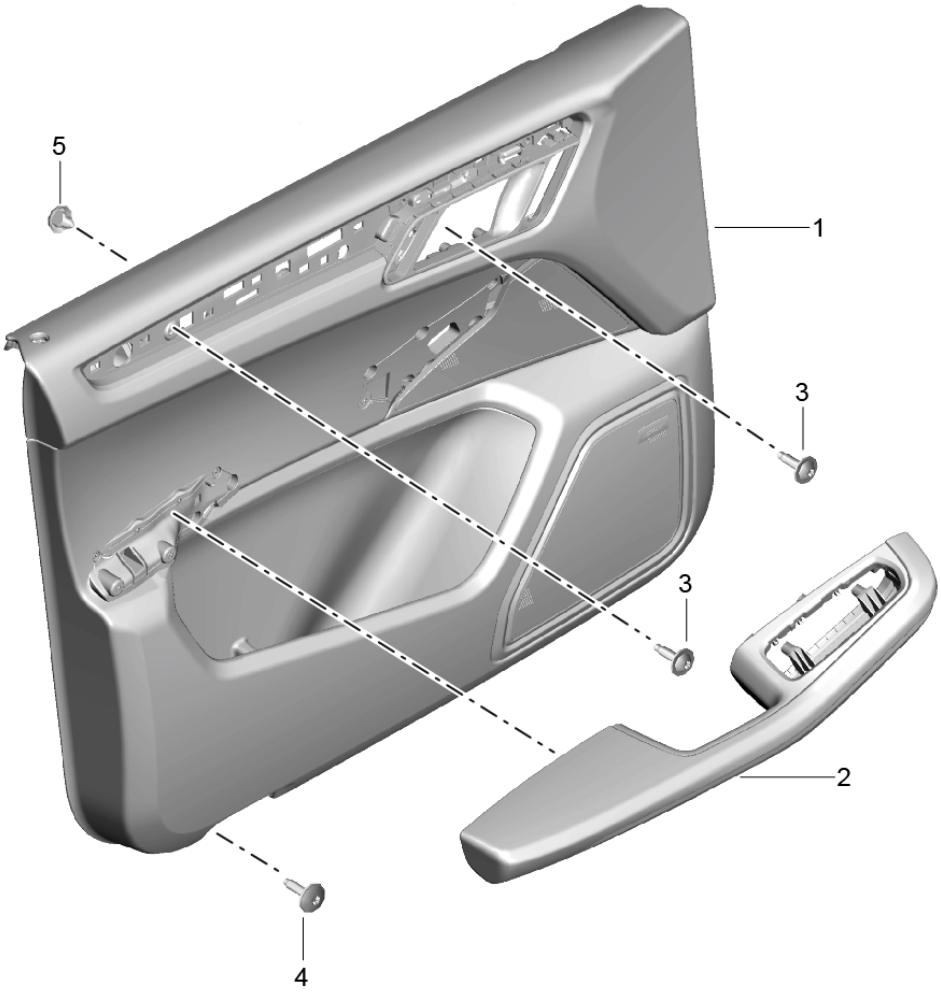

Model: 95B **Model life 2014>>**

Pos	Part Number	Description	Remark	Qty	Model
		Door trim panel			I3LS
		Front			
		Leather/			
		Alcantara			
(1)	95B 867 011 BM	Door trim panel	/L	1	I3L5/3L6/3PB
					I3PE/3PJ/9MA
					I9VK
		Leather			
	95B 867 011 BM A11	Black			+FF
	95B 867 011 BM 7J0	Luxor Beige			+FM
	95B 867 011 BM OA1	Agate Grey			+FH
	95B 867 011 BM OK6	Saddle Tan			+FI
	95B 867 011 BM HHX	Black/Carmine Red			+FL
	95B 867 011 BM HAG	Black/Rhodium Silver			+FE+TS
	95B 867 011 BM HAT	Black/Carrera Red			+TR
(1)	95B 867 012 BM	Door trim panel	/R	1	I3L4/3L5/3PB
					I3PE/3PH/9MA
					I9VK
		Leather			
	95B 867 012 BM A11	Black			+FF
	95B 867 012 BM 7J0	Luxor Beige			+FM
	95B 867 012 BM OA1	Agate Grey			+FH
	95B 867 012 BM OK6	Saddle Tan			+FI
	95B 867 012 BM HHX	Black/Carmine Red			+FL
	95B 867 012 BM HAG	Black/Rhodium Silver			+FE+TS
	95B 867 012 BM HAT	Black/Carrera Red			+TR
(1)	95B 867 011 BN	Door trim panel	/L	1	I3L4/3PH/3PN
					I9MA/9VK
		Leather			
	95B 867 011 BN A11	Black			+FF
	95B 867 011 BN 7J0	Luxor Beige			+FM
	95B 867 011 BN OA1	Agate Grey			+FH
	95B 867 011 BN OK6	Saddle Tan			+FI
	95B 867 011 BN HHX	Black/Carmine Red			+FL
	95B 867 011 BN HAG	Black/Rhodium Silver			+FE+TS
	95B 867 011 BN HAT	Black/Carrera Red			+TR
(1)	95B 867 012 BN	Door trim panel	/R	1	I3L6/3PJ/3PN
					I9MA/9VK
		Leather			
	95B 867 012 BN A11	Black			+FF
	95B 867 012 BN 7J0	Luxor Beige			+FM
	95B 867 012 BN OA1	Agate Grey			+FH
	95B 867 012 BN OK6	Saddle Tan			+FI
	95B 867 012 BN HHX	Black/Carmine Red			+FL
	95B 867 012 BN HAG	Black/Rhodium Silver			+FE+TS
	95B 867 012 BN HAT	Black/Carrera Red			+TR
(1)	95B 867 011 BP	Door trim panel	/L	1	I3L5/3L6/3PB
					I3PE/3PJ/9MA
					I9VL
		Leather			
	95B 867 011 BP A11	Black			+FF
	95B 867 011 BP 7J0	Luxor Beige			+FM
	95B 867 011 BP OA1	Agate Grey			+FH
	95B 867 011 BP OK6	Saddle Tan			+FI
	95B 867 011 BP HHX	Black/Carmine Red			+FL
	95B 867 011 BP HAG	Black/Rhodium Silver			+FE+TS
	95B 867 011 BP HAT	Black/Carrera Red			+TR
(1)	95B 867 012 BP	Door trim panel	/R	1	I3L4/3L5/3PB
					I3PE/3PH/9MA
					I9VL
		Leather			
	95B 867 012 BP A11	Black			+FF
	95B 867 012 BP 7J0	Luxor Beige			+FM

Model: 95B **Model life 2014>>**

Pos	Part Number	Description	Remark	Qty	Model
	95B 867 012 BP OA1	Agate Grey			+FH
	95B 867 012 BP OK6	Saddle Tan			+FI
	95B 867 012 BP HHX	Black/Carmine Red			+FL
	95B 867 012 BP HAG	Black/Rhodium Silver			+FE+TS
	95B 867 012 BP HAT	Black/Carrera Red			+TR
(1)	95B 867 011 BQ	Door trim panel	/L	1	I3L4/3PH/3PN
					I9MA/9VL
		Leather			
	95B 867 011 BQ A11	Black			+FF
	95B 867 011 BQ 7J0	Luxor Beige			+FM
	95B 867 011 BQ OA1	Agate Grey			+FH
	95B 867 011 BQ OK6	Saddle Tan			+FI
	95B 867 011 BQ HHX	Black/Carmine Red			+FL
	95B 867 011 BQ HAG	Black/Rhodium Silver			+FE+TS
	95B 867 011 BQ HAT	Black/Carrera Red			+TR
(1)	95B 867 012 BQ	Door trim panel	/R	1	I3L6/3PJ/3PN
					I9MA/9VL
		Leather			
	95B 867 012 BQ A11	Black			+FF
	95B 867 012 BQ 7J0	Luxor Beige			+FM
	95B 867 012 BQ OA1	Agate Grey			+FH
	95B 867 012 BQ OK6	Saddle Tan			+FI
	95B 867 012 BQ HHX	Black/Carmine Red			+FL
	95B 867 012 BQ HAG	Black/Rhodium Silver			+FE+TS
	95B 867 012 BQ HAT	Black/Carrera Red			+TR
(1)	95B 867 011 BR	Door trim panel	/L	1	I3L5/3L6/3PB
					I3PE/3PJ/9MA
					I9VJ
		Leather			
	95B 867 011 BR A11	Black			+FF
	95B 867 011 BR 7J0	Luxor Beige			+FM
	95B 867 011 BR OA1	Agate Grey			+FH
	95B 867 011 BR OK6	Saddle Tan			+FI
	95B 867 011 BR HHX	Black/Carmine Red			+FL
	95B 867 011 BR HAG	Black/Rhodium Silver			+FE+TS
	95B 867 011 BR HAT	Black/Carrera Red			+TR
(1)	95B 867 012 BR	Door trim panel	/R	1	I3L4/3L5/3PB
					I3PE/3PH/9MA
					I9VJ
		Leather			
	95B 867 012 BR A11	Black			+FF
	95B 867 012 BR 7J0	Luxor Beige			+FM
	95B 867 012 BR OA1	Agate Grey			+FH
	95B 867 012 BR OK6	Saddle Tan			+FI
	95B 867 012 BR HHX	Black/Carmine Red			+FL
	95B 867 012 BR HAG	Black/Rhodium Silver			+FE+TS
	95B 867 012 BR HAT	Black/Carrera Red			+TR
(1)	95B 867 011 BS	Door trim panel	/L	1	I3L4/3PH/3PN
					I9MA/9VJ
		Leather			
	95B 867 011 BS A11	Black			+FF
	95B 867 011 BS 7J0	Luxor Beige			+FM
	95B 867 011 BS OA1	Agate Grey			+FH
	95B 867 011 BS OK6	Saddle Tan			+FI
	95B 867 011 BS HHX	Black/Carmine Red			+FL
	95B 867 011 BS HAG	Black/Rhodium Silver			+FE+TS
	95B 867 011 BS HAT	Black/Carrera Red			+TR
(1)	95B 867 012 BS	Door trim panel	/R	1	I3L6/3PJ/3PN
					I9MA/9VJ
		Leather			
	95B 867 012 BS A11	Black			+FF
	95B 867 012 BS 7J0	Luxor Beige			+FM
	95B 867 012 BS OA1	Agate Grey			+FH

Model: 95B **Model life 2014>>**

Pos	Part Number	Description	Remark	Qty	Model
	95B 867 012 BS OK6	Saddle Tan			+FI
	95B 867 012 BS HHX	Black/Carmine Red			+FL
	95B 867 012 BS HAG	Black/Rhodium Silver			+FE+TS
	95B 867 012 BS HAT	Black/Carrera Red			+TR
(1)	95B 867 105 BM	Door trim panel	/L	1	I3L5/3L6/3PB
					I3PE/3PJ/9MB
					I9VK
		Leather			
	95B 867 105 BM A11	Black			+FF
	95B 867 105 BM 7J0	Luxor Beige			+FM
	95B 867 105 BM OA1	Agate Grey			+FH
	95B 867 105 BM OK6	Saddle Tan			+FI
	95B 867 105 BM HHX	Black/Carmine Red			+FL
	95B 867 105 BM HAG	Black/Rhodium Silver			+FE+TS
	95B 867 105 BM HAT	Black/Carrera Red			+TR
(1)	95B 867 106 BM	Door trim panel	/R	1	I3L4/3L5/3PB
					I3PE/3PH/9MB
					I9VK
		Leather			
	95B 867 106 BM A11	Black			+FF
	95B 867 106 BM 7J0	Luxor Beige			+FM
	95B 867 106 BM OA1	Agate Grey			+FH
	95B 867 106 BM OK6	Saddle Tan			+FI
	95B 867 106 BM HHX	Black/Carmine Red			+FL
	95B 867 106 BM HAG	Black/Rhodium Silver			+FE+TS
	95B 867 106 BM HAT	Black/Carrera Red			+TR
(1)	95B 867 105 BN	Door trim panel	/L	1	I3L4/3PH/3PN
					I9MB/9VK
		Leather			
	95B 867 105 BN A11	Black			+FF
	95B 867 105 BN 7J0	Luxor Beige			+FM
	95B 867 105 BN OA1	Agate Grey			+FH
	95B 867 105 BN OK6	Saddle Tan			+FI
	95B 867 105 BN HHX	Black/Carmine Red			+FL
	95B 867 105 BN HAG	Black/Rhodium Silver			+FE+TS
	95B 867 105 BN HAT	Black/Carrera Red			+TR
(1)	95B 867 106 BN	Door trim panel	/R	1	I3L6/3PJ/3PN
					I9MB/9VK
		Leather			
	95B 867 106 BN A11	Black			+FF
	95B 867 106 BN 7J0	Luxor Beige			+FM
	95B 867 106 BN OA1	Agate Grey			+FH
	95B 867 106 BN OK6	Saddle Tan			+FI
	95B 867 106 BN HHX	Black/Carmine Red			+FL
	95B 867 106 BN HAG	Black/Rhodium Silver			+FE+TS
	95B 867 106 BN HAT	Black/Carrera Red			+TR
(1)	95B 867 105 BP	Door trim panel	/L	1	I3L5/3L6/3PB
					I3PE/3PJ/9MB
					I9VL
		Leather			
	95B 867 105 BP A11	Black			+FF
	95B 867 105 BP 7J0	Luxor Beige			+FM
	95B 867 105 BP OA1	Agate Grey			+FH
	95B 867 105 BP OK6	Saddle Tan			+FI
	95B 867 105 BP HHX	Black/Carmine Red			+FL
	95B 867 105 BP HAG	Black/Rhodium Silver			+FE+TS
	95B 867 105 BP HAT	Black/Carrera Red			+TR
(1)	95B 867 106 BP	Door trim panel	/R	1	I3L4/3L5/3PB
					I3PE/3PH/9MB
					I9VL
		Leather			
	95B 867 106 BP A11	Black			+FF
	95B 867 106 BP 7J0	Luxor Beige			+FM

Model: 95B **Model life 2014>>**

Pos	Part Number	Description	Remark	Qty	Model
	95B 867 106 BP OA1	Agate Grey			+FH
	95B 867 106 BP OK6	Saddle Tan			+FI
	95B 867 106 BP HHX	Black/Carmine Red			+FL
	95B 867 106 BP HAG	Black/Rhodium Silver			+FE+TS
	95B 867 106 BP HAT	Black/Carrera Red			+TR
(1)	95B 867 105 BQ	Door trim panel	/L	1	I3L4/3PH/3PN
					I9MB/9VL
		Leather			
	95B 867 105 BQ A11	Black			+FF
	95B 867 105 BQ 7J0	Luxor Beige			+FM
	95B 867 105 BQ OA1	Agate Grey			+FH
	95B 867 105 BQ OK6	Saddle Tan			+FI
	95B 867 105 BQ HHX	Black/Carmine Red			+FL
	95B 867 105 BQ HAG	Black/Rhodium Silver			+FE+TS
	95B 867 105 BQ HAT	Black/Carrera Red			+TR
(1)	95B 867 106 BQ	Door trim panel	/R	1	I3L6/3PJ/3PN
					I9MB/9VL
		Leather			
	95B 867 106 BQ A11	Black			+FF
	95B 867 106 BQ 7J0	Luxor Beige			+FM
	95B 867 106 BQ OA1	Agate Grey			+FH
	95B 867 106 BQ OK6	Saddle Tan			+FI
	95B 867 106 BQ HHX	Black/Carmine Red			+FL
	95B 867 106 BQ HAG	Black/Rhodium Silver			+FE+TS
	95B 867 106 BQ HAT	Black/Carrera Red			+TR
(1)	95B 867 105 BR	Door trim panel	/L	1	I3L5/3L6/3PB
					I3PE/3PJ/9MB
					I9VJ
		Leather			
	95B 867 105 BR A11	Black			+FF
	95B 867 105 BR 7J0	Luxor Beige			+FM
	95B 867 105 BR OA1	Agate Grey			+FH
	95B 867 105 BR OK6	Saddle Tan			+FI
	95B 867 105 BR HHX	Black/Carmine Red			+FL
	95B 867 105 BR HAG	Black/Rhodium Silver			+FE+TS
	95B 867 105 BR HAT	Black/Carrera Red			+TR
(1)	95B 867 106 BR	Door trim panel	/R	1	I3L4/3L5/3PB
					I3PE/3PH/9MB
					I9VJ
		Leather			
	95B 867 106 BR A11	Black			+FF
	95B 867 106 BR 7J0	Luxor Beige			+FM
	95B 867 106 BR OA1	Agate Grey			+FH
	95B 867 106 BR OK6	Saddle Tan			+FI
	95B 867 106 BR HHX	Black/Carmine Red			+FL
	95B 867 106 BR HAG	Black/Rhodium Silver			+FE+TS
	95B 867 106 BR HAT	Black/Carrera Red			+TR
(1)	95B 867 105 BS	Door trim panel	/L	1	I3L4/3PH/3PN
					I9MB/9VJ
		Leather			
	95B 867 105 BS A11	Black			+FF
	95B 867 105 BS 7J0	Luxor Beige			+FM
	95B 867 105 BS OA1	Agate Grey			+FH
	95B 867 105 BS OK6	Saddle Tan			+FI
	95B 867 105 BS HHX	Black/Carmine Red			+FL
	95B 867 105 BS HAG	Black/Rhodium Silver			+FE+TS
	95B 867 105 BS HAT	Black/Carrera Red			+TR
(1)	95B 867 106 BS	Door trim panel	/R	1	I3L6/3PJ/3PN
					I9MB/9VJ
		Leather			
	95B 867 106 BS A11	Black			+FF
	95B 867 106 BS 7J0	Luxor Beige			+FM
	95B 867 106 BS OA1	Agate Grey			+FH

Model: 95B **Model life 2014>>**

Pos	Part Number	Description	Remark	Qty	Model
	95B 867 106 BS OK6	Saddle Tan			+FI
	95B 867 106 BS HHX	Black/Carmine Red			+FL
	95B 867 106 BS HAG	Black/Rhodium Silver			+FE+TS
	95B 867 106 BS HAT	Black/Carrera Red			+TR
(2)	95B 867 173 P	Armrest Alcantara	/LL /L	1	IL0L/4AH
	95B 867 173 P 2W0	Black			+FF
	95B 867 173 P OU5	Agate Grey			+FM
	95B 867 173 P 9U1	Luxor Beige			+FH
	95B 867 173 P OP2	Saddle Tan			+FI
	95B 867 173 P HMO	Black/Carmine Red			+FL
	95B 867 173 P HNO	Black/Rhodium Silver			+FE+TS
	95B 867 173 P HYI	Black/Carrera Red			+TR
(2)	95B 867 174 P	Armrest Alcantara	/LL /R	1	IL0L/4AH
	95B 867 174 P 2W0	Black			+FF
	95B 867 174 P OU5	Agate Grey			+FM
	95B 867 174 P 9U1	Luxor Beige			+Fh
	95B 867 174 P OP2	Saddle Tan			+FI
	95B 867 174 P HMO	Black/Carmine Red			+FL
	95B 867 174 P HNO	Black/Rhodium Silver			+FE+TS
	95B 867 174 P HYI	Black/Carrera Red			+TR
(2)	95B 867 173 Q	Armrest Alcantara	/RL /L	1	IL0R/4AH
	95B 867 173 Q 2W0	Black			+FF
	95B 867 173 Q OU5	Agate Grey			+FM
	95B 867 173 Q 9U1	Luxor Beige			+FH
	95B 867 173 Q OP2	Saddle Tan			+FI
	95B 867 173 Q HMO	Black/Carmine Red			+FL
	95B 867 173 Q HNO	Black/Rhodium Silver			+FE+TS
	95B 867 173 Q HYI	Black/Carrera Red			+TR
(2)	95B 867 174 Q	Armrest Alcantara	/RL /R	1	IL0R/4AH
	95B 867 174 Q 2W0	Black			+FF
	95B 867 174 Q OU5	Agate Grey			+FM
	95B 867 174 Q 9U1	Luxor Beige			+FH
	95B 867 174 Q OP2	Saddle Tan			+FI
	95B 867 174 Q HMO	Black/Carmine Red			+FL
	95B 867 174 Q HNO	Black/Rhodium Silver			+FE+TS
	95B 867 174 Q HYI	Black/Carrera Red			+TR
3	N 911 809 01	Oval-head screw M5X20-W		2	
4	N 907 758 01	Tapping screw ST4,8X19-F		1	
5	N 106 213 01	Expander nut 5,0-F		1	

Illustration: 808-40

PORSCHE

Model: 95B **Model life 2014>>**

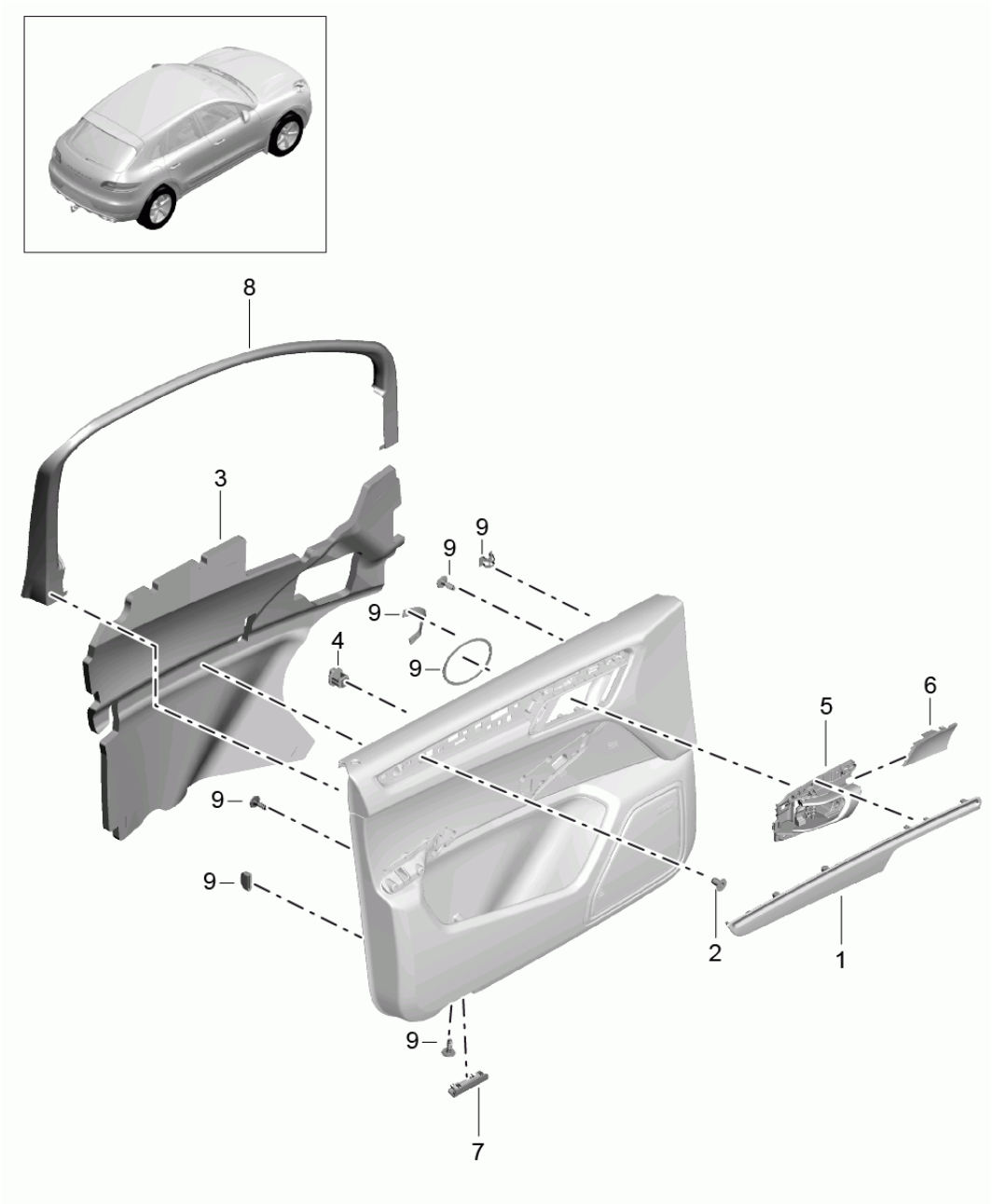

Model: 95B **Model life 2014>>**

Pos	Part Number	Description	Remark	Qty	Model
		Accessories			
		Door trim panel			
		Front			
1	95B 867 409	Moulding	/L	1	I5MA
		Paint			
	95B 867 409 5Q0	Black			
(1)	95B 867 410	Moulding	/R	1	I5MA
		Paint			
	95B 867 410 5Q0	Black			
(1)	95B 867 409 A	Moulding	/L	1	I5MP
	95B 867 409 A OE9	American Walnut			
(1)	95B 867 410 A	Moulding	/R	1	I5MP
	95B 867 410 A OE9	American Walnut			
(1)	95B 867 409 C	Moulding	/L	1	I5MH
	95B 867 409 C OH3	Carbon			
(1)	95B 867 410 C	Moulding	/R	1	I5MH
	95B 867 410 C OH3	Carbon			
(1)	95B 867 409 D	Moulding	/L	1	I5TL
		High gloss			
		Paint			
	95B 867 409 D OT1	Piano Black, high-gloss			
(1)	95B 867 410 D	Moulding	/R	1	I5TL
		High gloss			
		Paint			
	95B 867 410 D OT1	Piano Black, high-gloss			
(1)	95B 867 409 E	Moulding	/L	1	I5TE
	95B 867 409 E U03	Aluminium, brushed			
(1)	95B 867 410 E	Moulding	/R	1	I5TE
	95B 867 410 E U03	Aluminium, brushed			
(1)	95B 867 409 F	Moulding	/L	1	I7TK
	95B 867 409 F OA7	Light Oak			
(1)	95B 867 410 F	Moulding	/R	1	I7TK
	95B 867 410 F OA7	Light Oak			
(1)	95B 867 409 J	Moulding	/L	1	I5TH
	95B 867 409 J OR2	Aluminium Black			
(1)	95B 867 410 J	Moulding	/R	1	I5TH
	95B 867 410 J OR2	Aluminium Black			
2	958 552 900 00	Grommet		2	
3	95B 863 979	Insulation		2	
4	970 537 557 00	Support		18	
		Lining			
5	95B 837 019	Door opener	/L	1	
	95B 837 019 GT8	Galvano silver			
(5)	95B 837 020	Door opener	/R	1	
	95B 837 020 GT8	Galvano silver			
6	95B 837 095 B	Cover	/L	1	I9MA
		Door opener			
	95B 837 095 B 1E0	Black			
(6)	95B 837 096 B	Trim cover	/R	1	I9MA
		Door opener			
	95B 837 096 B 1E0	Black			
(6)	95B 837 095 C	Trim cover	/L	1	I9MB
		Door opener			
	95B 837 095 C 1E0	Black			
(6)	95B 837 096 C	Trim cover	/R	1	I9MB
		Door opener			
	95B 837 096 C 1E0	Black			
7	1K0 947 419 A	Reflector		1	I9MA
(7)	1K0 947 411 C	Warning light		1	I9MB
		Door			
8	95B 867 609 A	Lining	/L	1	
		Window frame			
		Front			

Model: 95B **Model life 2014>>**

Pos	Part Number	Description	Remark	Qty	Model
	95B 867 609 A 1E0	Black			
(8)	95B 867 610 A	Lining Window frame Front	/R	1	
	95B 867 610 A 1E0	Black			
9	95B 898 099	Repair kit Door trim panel		1	

Illustration: 808-50

Model: 95B **Model life 2014>>**

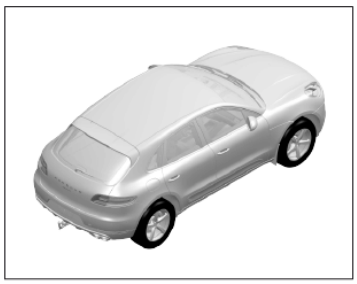

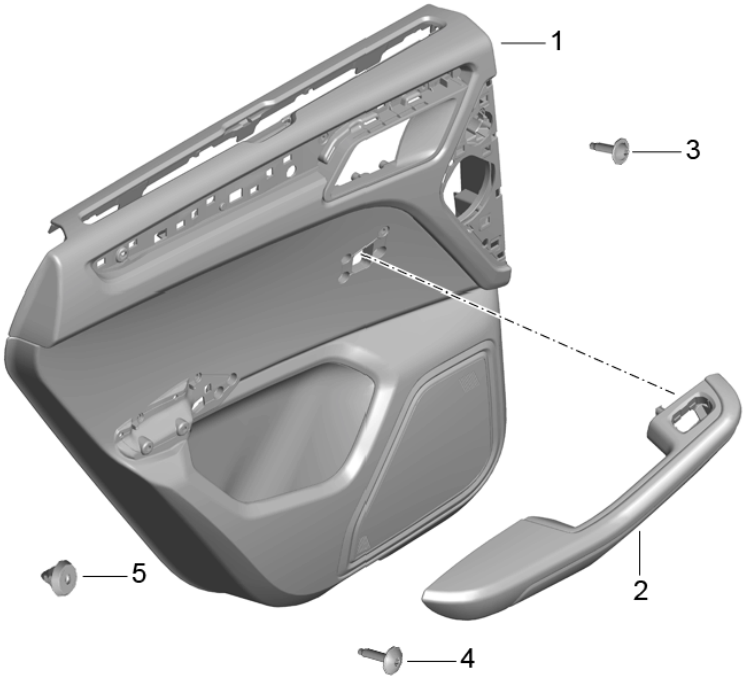

Model: 95B **Model life 2014>>**

Pos	Part Number	Description	Remark	Qty	Model
		Door trim panel Rear slush technology			I3LD/3LE
1	95B 867 211	Door trim panel slush technology	/L	1	I3Y0/4AH/9MA I9VK
	95B 867 211 DK4	Black			+VC,+VJ,+VF, +VI,+VU,+FA
	95B 867 211 DM5	Luxor Beige			+VE,+VM,+FC
	95B 867 211 OS2	Agate Grey			+VD,+VG,+FB
(1)	95B 867 211	Door trim panel slush technology	/L	1	I3Y0/4AK/4AP I9MA/9VK
	95B 867 211 HWO	Black/Luxor Beige			+VX,+VZ
(1)	95B 867 212	Door trim panel slush technology	/R	1	I3Y0/4AH/9MA I9VK
	95B 867 212 DK4	Black			+VC,+VJ,+VF, +VI,+VU,+FA
	95B 867 212 DM5	Luxor Beige			+VE,+VM,+FC
	95B 867 212 OS2	Agate Grey			+VD,+VG,+FB
(1)	95B 867 212	Door trim panel slush technology	/R	1	I3Y0/4AK/4AP I9MA/9VK
	95B 867 212 HWO	Black/Luxor Beige			+VX,+VZ
(1)	95B 867 211 D	Door trim panel slush technology	/L	1	I3Y4/4AH/9MA I9VK
	95B 867 211 D DK4	Black			+VC,+VJ,+VF, +VI,+VU,+FA
	95B 867 211 D DM5	Luxor Beige			+VE,+VM,+FC
	95B 867 211 D OS2	Agate Grey			+VD,+VG,+FB
(1)	95B 867 211 D	Door trim panel slush technology	/L	1	I3Y4/4AK/4AP I9MA/9VK
	95B 867 211 D HWO	Black/Luxor Beige			+VX,+VZ
(1)	95B 867 212 D	Door trim panel slush technology	/R	1	I3Y4/4AH/9MA I9VK
	95B 867 212 D DK4	Black			+VC,+VJ,+VF, +VI,+VU,+FA
	95B 867 212 D DM5	Luxor Beige			+VE,+VM,+FC
	95B 867 212 D OS2	Agate Grey			+VD,+VG,+FB
(1)	95B 867 212 D	Door trim panel slush technology	/R	1	I3Y4/4AK/4AP I9MA/9VK
	95B 867 212 D HWO	Black/Luxor Beige			+VX,+VZ
(1)	95B 867 211 H	Door trim panel slush technology	/L	1	I3Y0/4AH/9MA I9VL
	95B 867 211 H DK4	Black			+VC,+VJ,+VF, +VI,+VU,+FA
	95B 867 211 H DM5	Luxor Beige			+VE,+VM,+FC
	95B 867 211 H OS2	Agate Grey			+VD,+VG,+FB
(1)	95B 867 211 H	Door trim panel slush technology	/L	1	I3Y0/4AK/4AP I9MA/9VL
	95B 867 211 H HWO	Black/Luxor Beige			+VX,+VZ
(1)	95B 867 212 H	Door trim panel slush technology	/R	1	I3Y0/4AH/9MA I9VL
	95B 867 212 H DK4	Black			+VC,+VJ,+VF, +VI,+VU,+FA

Model: 95B **Model life 2014>>**

Pos	Part Number	Description	Remark	Qty	Model
	95B 867 212 H DM5	Luxor Beige			+VE,+VM,+FC
	95B 867 212 H OS2	Agate Grey			+VD,+VG,+FB
(1)	95B 867 212 H	Door trim panel	/R	1	I3Y0/4AK/4AP
					I9MA/9VL
		slush technology			
	95B 867 212 H HWO	Black/Luxor Beige			+VX,+VZ
(1)	95B 867 211 M	Door trim panel	/L	1	I3Y4/4AH/9MA
					I9VL
		slush technology			
	95B 867 211 M DK4	Black			+VC,+VJ,+VF,
					+VI,+VU,+FA
	95B 867 211 M DM5	Luxor Beige			+VE,+VM,+FC
	95B 867 211 M OS2	Agate Grey			+VD,+VG,+FB
(1)	95B 867 211 M	Door trim panel	/L	1	I3Y4/4AK/4AP
					I9MA/9VL
		slush technology			
	95B 867 211 M HWO	Black/Luxor Beige			+VX,+VZ
(1)	95B 867 212 M	Door trim panel	/R	1	I3Y4/4AH/9MA
					I9VL
		slush technology			
	95B 867 212 M DK4	Black			+VC,+VJ,+VF,
					+VI,+VU,+FA
	95B 867 212 M DM5	Luxor Beige			+VE,+VM,+FC
	95B 867 212 M OS2	Agate Grey			+VD,+VG,+FB
(1)	95B 867 212 M	Door trim panel	/R	1	I3Y4/4AK/4AP
					I9MA/9VL
		slush technology			
	95B 867 212 M HWO	Black/Luxor Beige			+VX,+VZ
(1)	95B 867 211 R	Door trim panel	/L	1	I3Y0/4AH/9MA
					I9VJ
		slush technology			
	95B 867 211 R DK4	Black			+VC,+VJ,+VF,
					+VI,+VU,+FA
	95B 867 211 R DM5	Luxor Beige			+VE,+VM,+FC
	95B 867 211 R OS2	Agate Grey			+VD,+VG,+FB
(1)	95B 867 211 R	Door trim panel	/L	1	I3Y0/4AK/4AP
					I9MA/9VJ
		slush technology			
	95B 867 211 R HWO	Black/Luxor Beige			+VX,+VZ
(1)	95B 867 212 R	Door trim panel	/R	1	I3Y0/4AH/9MA
					I9VJ
		slush technology			
	95B 867 212 R DK4	Black			+VC,+VJ,+VF,
					+VI,+VU,+FA
	95B 867 212 R DM5	Luxor Beige			+VE,+VM,+FC
	95B 867 212 R OS2	Agate Grey			+VD,+VG,+FB
(1)	95B 867 212 R	Door trim panel	/R	1	I3Y0/4AK/4AP
					I9MA/9VJ
		slush technology			
	95B 867 212 R HWO	Black/Luxor Beige			+VX,+VZ
(1)	95B 867 211 AB	Door trim panel	/L	1	I3Y4/4AH/9MA
					I9VJ
		slush technology			
	95B 867 211 AB DK4	Black			+VC,+VJ,+VF,
					+VI,+VU,+FA
	95B 867 211 AB DM5	Luxor Beige			+VE,+VM,+FC
	95B 867 211 AB OS2	Agate Grey			+VD,+VG,+FB
(1)	95B 867 211 AB	Door trim panel	/L	1	I3Y4/4AK/4AP
					I9MA/9VJ
		slush technology			
	95B 867 211 AB HWO	Black/Luxor Beige			+VX,+VZ
(1)	95B 867 212 AB	Door trim panel	/R	1	I3Y4/4AH/9MA
					I9VJ

Model: 95B **Model life 2014>>**

Pos	Part Number	Description	Remark	Qty	Model
		slush technology			
	95B 867 212 AB DK4	Black			+VC,+VJ,+VF,
					+VI,+VU,+FA
	95B 867 212 AB DM5	Luxor Beige			+VE,+VM,+FC
	95B 867 212 AB OS2	Agate Grey			+VD,+VG,+FB
(1)	95B 867 212 AB	Door trim panel	/R	1	I3Y4/4AK/4AP
					I9MA/9VJ
		slush technology			
	95B 867 212 AB HWO	Black/Luxor Beige			+VX,+VZ
(1)	95B 867 305	Door trim panel	/L	1	I3Y0/4AH/9MB
					I9VK
		slush technology			
	95B 867 305 DK4	Black			+VC,+VJ,+VF,
					+VI,+VU,+FA
	95B 867 305 DM5	Luxor Beige			+VE,+VM,+FC
	95B 867 305 OS2	Agate Grey			+VD,+VG,+FB
(1)	95B 867 305	Door trim panel	/L	1	I3Y0/4AK/4AP
					I9MB/9VK
		slush technology			
	95B 867 305 HWO	Black/Luxor Beige			+VX,+VZ
(1)	95B 867 306	Door trim panel	/R	1	I3Y0/4AH/9MB
					I9VK
		slush technology			
	95B 867 306 DK4	Black			+VC,+VJ,+VF,
					+VI,+VU,+FA
	95B 867 306 DM5	Luxor Beige			+VE,+VM,+FC
	95B 867 306 OS2	Agate Grey			+VD,+VG,+FB
(1)	95B 867 306	Door trim panel	/R	1	I3Y0/4AK/4AP
					I9MB/9VK
		slush technology			
	95B 867 306 HWO	Black/Luxor Beige			+VX,+VZ
(1)	95B 867 305 D	Door trim panel	/L	1	I3Y4/4AH/9MB
					I9VK
		slush technology			
	95B 867 305 D DK4	Black			+VC,+VJ,+VF,
					+VI,+VU,+FA
	95B 867 305 D DM5	Luxor Beige			+VE,+VM,+FC
	95B 867 305 D OS2	Agate Grey			+VD,+VG,+FB
(1)	95B 867 305 D	Door trim panel	/L	1	I3Y4/4AK/4AP
					I9MB/9VK
		slush technology			
	95B 867 305 D HWO	Black/Luxor Beige			+VX,+VZ
(1)	95B 867 306 D	Door trim panel	/R	1	I3Y4/4AH/9MB
					I9VK
		slush technology			
	95B 867 306 D DK4	Black			+VC,+VJ,+VF,
					+VI,+VU,+FA
	95B 867 306 D DM5	Luxor Beige			+VE,+VM,+FC
	95B 867 306 D OS2	Agate Grey			+VD,+VG,+FB
(1)	95B 867 306 D	Door trim panel	/R	1	I3Y4/4AK/4AP
					I9MB/9VK
		slush technology			
	95B 867 306 D HWO	Black/Luxor Beige			+VX,+VZ
(1)	95B 867 305 H	Door trim panel	/L	1	I3Y0/4AH/9MB
					I9VL
		slush technology			
	95B 867 305 H DK4	Black			+VC,+VJ,+VF,
					+VI,+VU,+FA
	95B 867 305 H DM5	Luxor Beige			+VE,+VM,+FC
	95B 867 305 H OS2	Agate Grey			+VD,+VG,+FB
(1)	95B 867 305 H	Door trim panel	/L	1	I3Y0/4AK/4AP
					I9MB/9VL
		slush technology			

Model: 95B **Model life 2014>>**

Pos	Part Number	Description	Remark	Qty	Model
	95B 867 305 H HWO	Black/Luxor Beige			+VX,+VZ
(1)	95B 867 306 H	Door trim panel	/R	1	I3Y0/4AH/9MB
					I9VL
		slush technology			
	95B 867 306 H DK4	Black			+VC,+VJ,+VF,
					+VI,+VU,+FA
	95B 867 306 H DM5	Luxor Beige			+VE,+VM,+FC
	95B 867 306 H OS2	Agate Grey			+VD,+VG,+FB
(1)	95B 867 306 H	Door trim panel	/R	1	I3Y0/4AK/4AP
					I9MB/9VL
		slush technology			
	95B 867 306 H HWO	Black/Luxor Beige			+VX,+VZ
(1)	95B 867 305 M	Door trim panel	/L	1	I3Y4/4AH/9MB
					I9VL
		slush technology			
	95B 867 305 M DK4	Black			+VC,+VJ,+VF,
					+VI,+VU,+FA
	95B 867 305 M DM5	Luxor Beige			+VE,+VM,+FC
	95B 867 305 M OS2	Agate Grey			+VD,+VG,+FB
(1)	95B 867 305 M	Door trim panel	/L	1	I3Y4/4AK/4AP
					I9MB/9VL
		slush technology			
	95B 867 305 M HWO	Black/Luxor Beige			+VX,+VZ
(1)	95B 867 306 M	Door trim panel	/R	1	I3Y4/4AH/9MB
					I9VL
		slush technology			
	95B 867 306 M DK4	Black			+VC,+VJ,+VF,
					+VI,+VU,+FA
	95B 867 306 M DM5	Luxor Beige			+VE,+VM,+FC
	95B 867 306 M OS2	Agate Grey			+VD,+VG,+FB
(1)	95B 867 306 M	Door trim panel	/R	1	I3Y4/4AK/4AP
					I9MB/9VL
		slush technology			
	95B 867 306 M HWO	Black/Luxor Beige			+VX,+VZ
(1)	95B 867 305 R	Door trim panel	/L	1	I3Y0/4AH/9MB
					I9VJ
		slush technology			
	95B 867 305 R DK4	Black			+VC,+VJ,+VF,
					+VI,+VU,+FA
	95B 867 305 R DM5	Luxor Beige			+VE,+VM,+FC
	95B 867 305 R OS2	Agate Grey			+VD,+VG,+FB
(1)	95B 867 305 R	Door trim panel	/L	1	I3Y0/4AK/4AP
					I9MB/9VJ
		slush technology			
	95B 867 305 R HWO	Black/Luxor Beige			+VX,+VZ
(1)	95B 867 306 R	Door trim panel	/R	1	I3Y0/4AH/9MB
					I9VJ
		slush technology			
	95B 867 306 R DK4	Black			+VC,+VJ,+VF,
					+VI,+VU,+FA
	95B 867 306 R DM5	Luxor Beige			+VE,+VM,+FC
	95B 867 306 R OS2	Agate Grey			+VD,+VG,+FB
(1)	95B 867 306 R	Door trim panel	/R	1	I3Y0/4AK/4AP
					I9MB/9VJ
		slush technology			
	95B 867 306 R HWO	Black/Luxor Beige			+VX,+VZ
(1)	95B 867 305 AB	Door trim panel	/L	1	I3Y4/4AH/9MB
					I9VJ
		slush technology			
	95B 867 305 AB DK4	Black			+VC,+VJ,+VF,
					+VI,+VU,+FA
	95B 867 305 AB DM5	Luxor Beige			+VE,+VM,+FC
	95B 867 305 AB OS2	Agate Grey			+VD,+VG,+FB

Model: 95B **Model life 2014>>**

Pos	Part Number	Description	Remark	Qty	Model
(1)	95B 867 305 AB	Door trim panel	/L	1	I3Y4/4AK/4AP
					I9MB/9VJ
		slush technology			
	95B 867 305 AB HWO	Black/Luxor Beige			+VX,+VZ
(1)	95B 867 306 AB	Door trim panel	/R	1	I3Y4/4AH/9MB
					I9VJ
		slush technology			
	95B 867 306 AB DK4	Black			+VC,+VJ,+VF,
					+VI,+VU,+FA
	95B 867 306 AB DM5	Luxor Beige			+VE,+VM,+FC
	95B 867 306 AB OS2	Agate Grey			+VD,+VG,+FB
(1)	95B 867 306 AB	Door trim panel	/R	1	I3Y4/4AK/4AP
					I9MB/9VJ
		slush technology			
	95B 867 306 AB HWO	Black/Luxor Beige			+VX,+VZ
2	95B 867 373	Armrest	/L	1	I3LD
		Leatherette			
	95B 867 373 1D0	Black			+VC,+VX
	95B 867 373 2E0	Luxor Beige			+VE
	95B 867 373 OW7	Agate Grey			+VD
(2)	95B 867 374	Armrest	/R	1	I3LD
		Leatherette			
	95B 867 374 1D0	Black			+VC,+VX
	95B 867 374 2E0	Luxor Beige			+VE
	95B 867 374 OW7	Agate Grey			+VD
(2)	95B 867 373 A	Armrest	/L	1	I3LE/3LH/3LT
		Leather package			
	95B 867 373 A A11	Black			+VF
	95B 867 373 A OA1	Agate Grey			+VG
	95B 867 373 A 7J0	Luxor Beige			+VH,+VZ
	95B 867 373 A HAO	Black/Saddle Tan			+VJ
	95B 867 373 A HBO	Black/Carrera Red			+VI,+VU
(2)	95B 867 374 A	Armrest	/R	1	I3LE/3LH/3LT
		Leather package			
	95B 867 374 A A11	Black			+VF
	95B 867 374 A OA1	Agate Grey			+VG
	95B 867 374 A 7J0	Luxor Beige			+VH,+VZ
	95B 867 374 A HAO	Black/Saddle Tan			+VJ
	95B 867 374 A HBO	Black/Carrera Red			+VI,+VU
(2)	95B 867 373 G	Armrest	/L	1	I3LS/4AH
		Alcantara			
	95B 867 373 G 2W0	Black			+FA
	95B 867 373 G OU5	Agate Grey			+FB
	95B 867 373 G 9U1	Luxor Beige			+FC
(2)	95B 867 374 G	Armrest	/R	1	I3LS/4AH
		Alcantara			
	95B 867 374 G 2W0	Black			+FA
	95B 867 374 G OU5	Agate Grey			+FB
	95B 867 374 G 9U1	Luxor Beige			+FC
3	N 911 809 01	Oval-head screw		1	
		M5X20-W			
4	N 907 758 01	Tapping screw		1	
		ST4,8X19-F			
5	N 106 213 01	Expander nut		1	
		5,0-F			

Illustration: 808-60

PORSCHE

Model: 95B **Model life 2014>>**

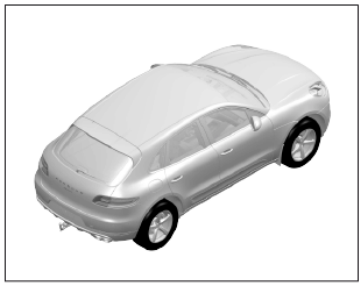

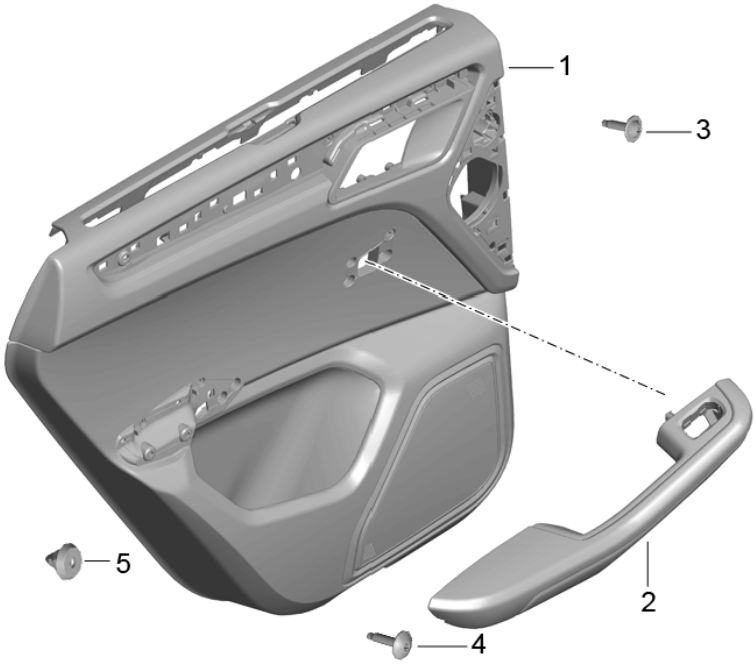

Model: 95B **Model life 2014>>**

Pos	Part Number	Description	Remark	Qty	Model
		Door trim panel			I3LH/3LM
		Rear			
		Leather			
1	95B 867 211 A	Door trim panel	/L	1	I3LH/3Y0/9MA
					I9VK
		Leather			
	95B 867 211 A A11	Black			+VK
	95B 867 211 A 7J0	Luxor Beige			+VM
	95B 867 211 A OA1	Agate Grey			+VL
	95B 867 211 A OK6	Saddle Tan			+VN
1	95B 867 211 AF	Door trim panel	/L	1	I3LH/3Y0/9MA
					I9VK
		Leather			
	95B 867 211 AF A11	Black			+VK
	95B 867 211 AF 7J0	Luxor Beige			+VM
	95B 867 211 AF OA1	Agate Grey			+VL
	95B 867 211 AF OK6	Saddle Tan			+VN
	95B 867 211 AF HHX	Black/Carmine Red			+FN
	95B 867 211 AF HAG	Black/Rhodium Silver			+FK
(1)	95B 867 212 A	Door trim panel	/R	1	I3LH/3Y0/9MA
					I9VK
		Leather			
	95B 867 212 A A11	Black			+VK
	95B 867 212 A 7J0	Luxor Beige			+VM
	95B 867 212 A OA1	Agate Grey			+VL
	95B 867 212 A OK6	Saddle Tan			+VN
(1)	95B 867 212 AF	Door trim panel	/R	1	I3LH/3Y0/9MA
					I9VK
		Leather			
	95B 867 212 AF A11	Black			+VK
	95B 867 212 AF 7J0	Luxor Beige			+VM
	95B 867 212 AF OA1	Agate Grey			+VL
	95B 867 212 AF OK6	Saddle Tan			+VN
	95B 867 212 AF HHX	Black/Carmine Red			+FN
	95B 867 212 AF HAG	Black/Rhodium Silver			+FK
(1)	95B 867 211 B	Door trim panel	/L	1	I3LM/3Y0/9MA
					I9VK
		Natural leather			
	95B 867 211 B 6J0	Espresso			+VR
(1)	95B 867 212 B	Door trim panel	/R	1	I3LM/3Y0/9MA
					I9VK
		Natural leather			
	95B 867 212 B 6J0	Espresso			+VR
(1)	95B 867 211 AH	Door trim panel	/L	1	I3LH/3Y4/9MA
					I9VK
		Leather			
	95B 867 211 AH A11	Black			+VK
	95B 867 211 AH 7J0	Luxor Beige			+VM
	95B 867 211 AH OA1	Agate Grey			+VL
	95B 867 211 AH OK6	Saddle Tan			+VN
	95B 867 211 AH HHX	Black/Carmine Red			+FN
	95B 867 211 AH HAG	Black/Rhodium Silver			+FK
(1)	95B 867 212 AH	Door trim panel	/R	1	I3LH/3Y4/9MA
					I9VK
		Leather			
	95B 867 212 AH A11	Black			+VK
	95B 867 212 AH 7J0	Luxor Beige			+VM
	95B 867 212 AH OA1	Agate Grey			+VL
	95B 867 212 AH OK6	Saddle Tan			+VN
	95B 867 212 AH HHX	Black/Carmine Red			+FN
	95B 867 212 AH HAG	Black/Rhodium Silver			+FK
(1)	95B 867 211 F	Door trim panel	/L	1	I3LM/3Y4/9MA
					I9VK

Model: 95B **Model life 2014>>**

Pos	Part Number	Description	Remark	Qty	Model
		Natural leather			
	95B 867 211 F 6J0	Espresso			+VR
(1)	95B 867 212 F	Door trim panel	/R	1	I3LM/3Y4/9MA
					I9VK
		Natural leather			
	95B 867 212 F 6J0	Espresso			+VR
(1)	95B 867 211 J	Door trim panel	/L	1	I3LH/3Y0/9MA
					I9VL
		Leather			
	95B 867 211 J A11	Black			+VK
	95B 867 211 J 7J0	Luxor Beige			+VM
	95B 867 211 J OA1	Agate Grey			+VL
	95B 867 211 J OK6	Saddle Tan			+VN
(1)	95B 867 211 AJ	Door trim panel	/L	1	I3LH/3Y0/9MA
					I9VL
		Leather			
	95B 867 211 AJ A11	Black			+VK
	95B 867 211 AJ 7J0	Luxor Beige			+VM
	95B 867 211 AJ OA1	Agate Grey			+VL
	95B 867 211 AJ OK6	Saddle Tan			+VN
	95B 867 211 AJ HHX	Black/Carmine Red			+FN
	95B 867 211 AJ HAG	Black/Rhodium Silver			+FK
(1)	95B 867 212 J	Door trim panel	/R	1	I3LH/3Y0/9MA
					I9VL
		Leather			
	95B 867 212 J A11	Black			+VK
	95B 867 212 J 7J0	Luxor Beige			+VM
	95B 867 212 J OA1	Agate Grey			+VL
	95B 867 212 J OK6	Saddle Tan			+VN
(1)	95B 867 212 AJ	Door trim panel	/R	1	I3LH/3Y0/9MA
					I9VL
		Leather			
	95B 867 212 AJ A11	Black			+VK
	95B 867 212 AJ 7J0	Luxor Beige			+VM
	95B 867 212 AJ OA1	Agate Grey			+VL
	95B 867 212 AJ OK6	Saddle Tan			+VN
	95B 867 212 AJ HHX	Black/Carmine Red			+FN
	95B 867 212 AJ HAG	Black/Rhodium Silver			+FK
(1)	95B 867 211 K	Door trim panel	/L	1	I3LM/3Y0/9MA
					I9VL
		Natural leather			
	95B 867 211 K 6J0	Espresso			+VR
(1)	95B 867 212 K	Door trim panel	/R	1	I3LM/3Y0/9MA
					I9VL
		Natural leather			
	95B 867 212 K 6J0	Espresso			+VR
(1)	95B 867 211 AK	Door trim panel	/L	1	I3LH/3Y4/9MA
					I9VL
		Leather			
	95B 867 211 AK A11	Black			+VK
	95B 867 211 AK 7J0	Luxor Beige			+VM
	95B 867 211 AK OA1	Agate Grey			+VL
	95B 867 211 AK OK6	Saddle Tan			+VN
	95B 867 211 AK HHX	Black/Carmine Red			+FN
	95B 867 211 AK HAG	Black/Rhodium Silver			+FK
(1)	95B 867 212 AK	Door trim panel	/R	1	I3LH/3Y4/9MA
					I9VL
		Leather			
	95B 867 212 AK A11	Black			+VK
	95B 867 212 AK 7J0	Luxor Beige			+VM
	95B 867 212 AK OA1	Agate Grey			+VL
	95B 867 212 AK OK6	Saddle Tan			+VN
	95B 867 212 AK HHX	Black/Carmine Red			+FN

Model: 95B **Model life 2014>>**

Pos	Part Number	Description	Remark	Qty	Model
	95B 867 212 AK HAG	Black/Rhodium Silver			+FK
(1)	95B 867 211 P	Door trim panel	/L	1	I3LM/3Y4/9MA
					I9VL
		Natural leather			
	95B 867 211 P 6J0	Espresso			+VR
(1)	95B 867 212 P	Door trim panel	/R	1	I3LM/3Y4/9MA
					I9VL
		Natural leather			
	95B 867 212 P 6J0	Espresso			+VR
(1)	95B 867 211 AL	Door trim panel	/L	1	I3LH/3Y0/9MA
					I9VJ
		Leather			
	95B 867 211 AL A11	Black			+VK
	95B 867 211 AL 7J0	Luxor Beige			+VM
	95B 867 211 AL OA1	Agate Grey			+VL
	95B 867 211 AL OK6	Saddle Tan			+VN
	95B 867 211 AL HHX	Black/Carmine Red			+FN
	95B 867 211 AL HAG	Black/Rhodium Silver			+FK
(1)	95B 867 212 AL	Door trim panel	/R	1	I3LH/3Y0/9MA
					I9VJ
		Leather			
	95B 867 212 AL A11	Black			+VK
	95B 867 212 AL 7J0	Luxor Beige			+VM
	95B 867 212 AL OA1	Agate Grey			+VL
	95B 867 212 AL OK6	Saddle Tan			+VN
	95B 867 212 AL HHX	Black/Carmine Red			+FN
	95B 867 212 AL HAG	Black/Rhodium Silver			+FK
(1)	95B 867 211 T	Door trim panel	/L	1	I3LM/3Y0/9MA
					I9VJ
		Natural leather			
	95B 867 211 T 6J0	Espresso			+VR
(1)	95B 867 212 T	Door trim panel	/R	1	I3LM/3Y0/9MA
					I9VJ
		Natural leather			
	95B 867 212 T 6J0	Espresso			+VR
(1)	95B 867 211 AG	Door trim panel	/L	1	I3LH/3Y4/9MA
					I9VJ
		Leather			
	95B 867 211 AG A11	Black			+VK
	95B 867 211 AG 7J0	Luxor Beige			+VM
	95B 867 211 AG OA1	Agate Grey			+VL
	95B 867 211 AG OK6	Saddle Tan			+VN
	95B 867 211 AG HHX	Black/Carmine Red			+FN
	95B 867 211 AG HAG	Black/Rhodium Silver			+FK
(1)	95B 867 212 AG	Door trim panel	/R	1	I3LH/3Y4/9MA
					I9VJ
		Leather			
	95B 867 212 AG A11	Black			+VK
	95B 867 212 AG 7J0	Luxor Beige			+VM
	95B 867 212 AG OA1	Agate Grey			+VL
	95B 867 212 AG OK6	Saddle Tan			+VN
	95B 867 212 AG HHX	Black/Carmine Red			+FN
	95B 867 212 AG HAG	Black/Rhodium Silver			+FK
(1)	95B 867 211 AD	Door trim panel	/L	1	I3LM/3Y4/9MA
					I9VJ
		Natural leather			
	95B 867 211 AD 6J0	Espresso			+VR
(1)	95B 867 212 AD	Door trim panel	/R	1	I3LM/3Y4/9MA
					I9VJ
		Natural leather			
	95B 867 212 AD 6J0	Espresso			+VR
(1)	95B 867 305 AF	Door trim panel	/L	1	I3LH/3Y0/9MB
					I9VK

Model: 95B **Model life 2014>>**

Pos	Part Number	Description	Remark	Qty	Model
		Leather			
	95B 867 305 AF A11	Black			+VK
	95B 867 305 AF 7J0	Luxor Beige			+VM
	95B 867 305 AF OA1	Agate Grey			+VL
	95B 867 305 AF OK6	Saddle Tan			+VN
	95B 867 305 AF HHX	Black/Carmine Red			+FN
	95B 867 305 AF HAG	Black/Rhodium Silver			+FK
(1)	95B 867 306 AF	Door trim panel	/R	1	I3LH/3Y0/9MB I9VK
		Leather			
	95B 867 306 AF A11	Black			+VK
	95B 867 306 AF 7J0	Luxor Beige			+VM
	95B 867 306 AF OA1	Agate Grey			+VL
	95B 867 306 AF OK6	Saddle Tan			+VN
	95B 867 306 AF HHX	Black/Carmine Red			+FN
	95B 867 306 AF HAG	Black/Rhodium Silver			+FK
(1)	95B 867 305 B	Door trim panel	/L	1	I3LM/3Y0/9MB I9VK
		Natural leather			
	95B 867 305 B 6J0	Espresso			+VR
(1)	95B 867 306 B	Door trim panel	/R	1	I3LM/3Y0/9MB I9VK
		Natural leather			
	95B 867 306 B 6J0	Espresso			+VR
(1)	95B 867 305 AH	Door trim panel	/L	1	I3LH/3Y4/9MB I9VK
		Leather			
	95B 867 305 AH A11	Black			+VK
	95B 867 305 AH 7J0	Luxor Beige			+VM
	95B 867 305 AH OA1	Agate Grey			+VL
	95B 867 305 AH OK6	Saddle Tan			+VN
	95B 867 305 AH HHX	Black/Carmine Red			+FN
	95B 867 305 AH HAG	Black/Rhodium Silver			+FK
(1)	95B 867 306 AH	Door trim panel	/R	1	I3LH/3Y4/9MB I9VK
		Leather			
	95B 867 306 AH A11	Black			+VK
	95B 867 306 AH 7J0	Luxor Beige			+VM
	95B 867 306 AH OA1	Agate Grey			+VL
	95B 867 306 AH OK6	Saddle Tan			+VN
	95B 867 306 AH HHX	Black/Carmine Red			+FN
	95B 867 306 AH HAG	Black/Rhodium Silver			+FK
(1)	95B 867 305 F	Door trim panel	/L	1	I3LM/3Y4/9MB I9VK
		Natural leather			
	95B 867 305 F 6J0	Espresso			+VR
(1)	95B 867 306 F	Door trim panel	/R	1	I3LM/3Y4/9MB I9VK
		Natural leather			
	95B 867 306 F 6J0	Espresso			+VR
(1)	95B 867 305 AJ	Door trim panel	/L	1	I3LH/3Y0/9MB I9VL
		Leather			
	95B 867 305 AJ A11	Black			+VK
	95B 867 305 AJ 7J0	Luxor Beige			+VM
	95B 867 305 AJ OA1	Agate Grey			+VL
	95B 867 305 AJ OK6	Saddle Tan			+VN
	95B 867 305 AJ HHX	Black/Carmine Red			+FN
	95B 867 305 AJ HAG	Black/Rhodium Silver			+FK
(1)	95B 867 306 AJ	Door trim panel	/R	1	I3LH/3Y0/9MB I9VL
		Leather			
	95B 867 306 AJ A11	Black			+VK

Model: 95B **Model life 2014>>**

Pos	Part Number	Description	Remark	Qty	Model
	95B 867 306 AJ 7J0	Luxor Beige			+VM
	95B 867 306 AJ OA1	Agate Grey			+VL
	95B 867 306 AJ OK6	Saddle Tan			+VN
	95B 867 306 AJ HHX	Black/Carmine Red			+FN
	95B 867 306 AJ HAG	Black/Rhodium Silver			+FK
(1)	95B 867 305 K	Door trim panel	/L	1	I3LM/3Y0/9MB
					I9VL
		Natural leather			
	95B 867 305 K 6J0	Espresso			+VR
(1)	95B 867 306 K	Door trim panel	/R	1	I3LM/3Y0/9MB
					I9VL
		Natural leather			
	95B 867 306 K 6J0	Espresso			+VR
(1)	95B 867 305 N	Door trim panel	/L	1	I3LH/3Y4/9MB
					I9VL
		Leather			
	95B 867 305 N A11	Black			+VK
	95B 867 305 N 7J0	Luxor Beige			+VM
	95B 867 305 N OA1	Agate Grey			+VL
	95B 867 305 N OK6	Saddle Tan			+VN
(1)	95B 867 305 AK	Door trim panel	/L	1	I3LH/3Y4/9MB
					I9VL
		Leather			
	95B 867 305 AK A11	Black			+VK
	95B 867 305 AK 7J0	Luxor Beige			+VM
	95B 867 305 AK OA1	Agate Grey			+VL
	95B 867 305 AK OK6	Saddle Tan			+VN
	95B 867 305 AK HHX	Black/Carmine Red			+FN
	95B 867 305 AK HAG	Black/Rhodium Silver			+FK
(1)	95B 867 306 N	Door trim panel	/R	1	I3LH/3Y4/9MB
					I9VL
		Leather			
	95B 867 306 N A11	Black			+VK
	95B 867 306 N 7J0	Luxor Beige			+VM
	95B 867 306 N OA1	Agate Grey			+VL
	95B 867 306 N OK6	Saddle Tan			+VN
(1)	95B 867 306 AK	Door trim panel	/R	1	I3LH/3Y4/9MB
					I9VL
		Leather			
	95B 867 306 AK A11	Black			+VK
	95B 867 306 AK 7J0	Luxor Beige			+VM
	95B 867 306 AK OA1	Agate Grey			+VL
	95B 867 306 AK OK6	Saddle Tan			+VN
	95B 867 306 AK HHX	Black/Carmine Red			+FN
	95B 867 306 AK HAG	Black/Rhodium Silver			+FK
(1)	95B 867 305 P	Door trim panel	/L	1	I3LM/3Y4/9MB
					I9VL
		Nature			
	95B 867 305 P 6J0	Espresso			+VR
(1)	95B 867 306 P	Door trim panel	/R	1	I3LM/3Y4/9MB
					I9VL
		Natural leather			
	95B 867 306 P 6J0	Espresso			+VR
(1)	95B 867 305 AL	Door trim panel	/L	1	I3LH/3Y0/9MB
					I9VJ
		Leather			
	95B 867 305 AL A11	Black			+VK
	95B 867 305 AL 7J0	Luxor Beige			+VM
	95B 867 305 AL OA1	Agate Grey			+VL
	95B 867 305 AL OK6	Saddle Tan			+VN
	95B 867 305 AL HHX	Black/Carmine Red			+FN
	95B 867 305 AL HAG	Black/Rhodium Silver			+FK
(1)	95B 867 306 AL	Door trim panel	/R	1	I3LH/3Y0/9MB

Model: 95B **Model life 2014>>**

Pos	Part Number	Description	Remark	Qty	Model
					I9VJ
		Leather			
	95B 867 306 AL A11	Black			+VK
	95B 867 306 AL 7J0	Luxor Beige			+VM
	95B 867 306 AL OA1	Agate Grey			+VL
	95B 867 306 AL OK6	Saddle Tan			+VN
	95B 867 306 AL HHX	Black/Carmine Red			+FN
	95B 867 306 AL HAG	Black/Rhodium Silver			+FK
(1)	95B 867 305 T	Door trim panel	/L	1	I3LM/3Y0/9MB
					I9VJ
		Natural leather			
	95B 867 305 T 6J0	Espresso			+VR
(1)	95B 867 306 T	Door trim panel	/R	1	I3LM/3Y0/9MB
					I9VJ
		Natural leather			
	95B 867 306 T 6J0	Espresso			+VR
(1)	95B 867 305 AG	Door trim panel	/L	1	I3LH/3Y4/9MB
					I9VJ
		Leather			
	95B 867 305 AG A11	Black			+VK
	95B 867 305 AG 7J0	Luxor Beige			+VM
	95B 867 305 AG OA1	Agate Grey			+VL
	95B 867 305 AG OK6	Saddle Tan			+VN
	95B 867 305 AG HHX	Black/Carmine Red			+FN
	95B 867 305 AG HAG	Black/Rhodium Silver			+FK
(1)	95B 867 306 AG	Door trim panel	/R	1	I3LH/3Y4/9MB
					I9VJ
		Leather			
	95B 867 306 AG A11	Black			+VK
	95B 867 306 AG 7J0	Luxor Beige			+VM
	95B 867 306 AG OA1	Agate Grey			+VL
	95B 867 306 AG OK6	Saddle Tan			+VN
	95B 867 306 AG HHX	Black/Carmine Red			+FN
	95B 867 306 AG HAG	Black/Rhodium Silver			+FK
(1)	95B 867 305 AD	Door trim panel	/L	1	I3LM/3Y4/9MB
					I9VJ
		Natural leather			
	95B 867 305 AD 6J0	Espresso			+VR
(1)	95B 867 306 AD	Door trim panel	/R	1	I3LM/3Y4/9MB
					I9VJ
		Natural leather			
	95B 867 306 AD 6J0	Espresso			+VR
2	95B 867 373 A	Armrest	/L	1	I3LE/3LH/3LT
		Leather			
	95B 867 373 A A11	Black			+VK
	95B 867 373 A 7J0	Luxor Beige			+VM
	95B 867 373 A OA1	Agate Grey			+VL
	95B 867 373 A OK6	Saddle Tan			+VN
	95B 867 373 A HHX	Black/Carmine Red			+FN
	95B 867 373 A HAG	Black/Rhodium Silver			+FK
(2)	95B 867 374 A	Armrest	/R	1	I3LE/3LH/3LT
		Leather			
	95B 867 374 A A11	Black			+VK
	95B 867 374 A 7J0	Luxor Beige			+VM
	95B 867 374 A OA1	Agate Grey			+VL
	95B 867 374 A OK6	Saddle Tan			+VN
	95B 867 374 A HHX	Black/Carmine Red			+FN
	95B 867 374 A HAG	Black/Rhodium Silver			+FK
(2)	95B 867 373 B	Armrest	/L	1	I3LM
		Natural leather			
	95B 867 373 B 6J0	Espresso			+VR
(2)	95B 867 374 B	Armrest	/R	1	I3LM
		Natural leather			

Illustration: 808-60

PORSCHE

Model: 95B **Model life 2014>>**

Pos	Part Number	Description	Remark	Qty	Model
	95B 867 374 B 6J0	Espresso			+VR
3	N 911 809 01	Oval-head screw M5X20-W		1	
4	N 907 758 01	Tapping screw ST4,8X19-F		1	
5	N 106 213 01	Expander nut 5,0-F		1	

Illustration: 808-70

PORSCHE

Model: 95B **Model life 2014>>**

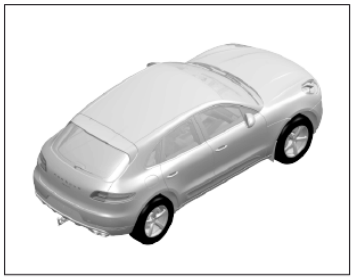

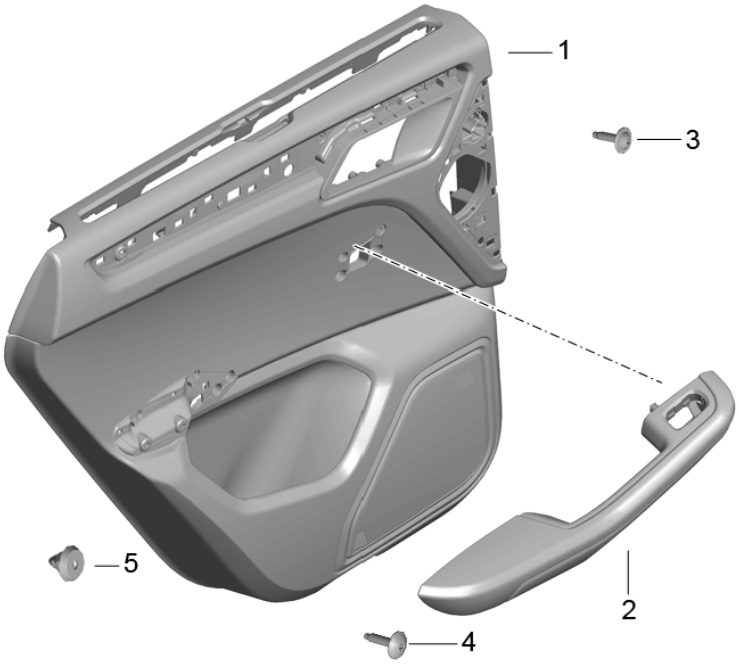

Model: 95B **Model life 2014>>**

Pos	Part Number	Description	Remark	Qty	Model
		Door trim panel			I3LT
		Rear			
		Leather			
		two-colour			
1	95B 867 211 C	Door trim panel	/L	1	I3Y0/9MA/9VK
		Leather			
		two-colour			
	95B 867 211 C CDR	Black/Carrera Red			+VO
	95B 867 211 C CDS	Agate Grey/Pebble Grey			+VQ
	95B 867 211 C CDT	Saddle Tan/Luxor Beige			+VP
(1)	95B 867 212 C	Door trim panel	/R	1	I3Y0/9MA/9VK
		Leather			
		two-colour			
	95B 867 212 C CDR	Black/Carrera Red			+VO
	95B 867 212 C CDS	Agate Grey/Pebble Grey			+VQ
	95B 867 212 C CDT	Saddle Tan/Luxor Beige			+VP
(1)	95B 867 211 G	Door trim panel	/L	1	I3Y4/9MA/9VK
		Leather			
		two-colour			
	95B 867 211 G CDR	Black/Carrera Red			+VO
	95B 867 211 G CDS	Agate Grey/Pebble Grey			+VQ
	95B 867 211 G CDT	Saddle Tan/Luxor Beige			+VP
(1)	95B 867 212 G	Door trim panel	/R	1	I3Y4/9MA/9VK
		Leather			
		two-colour			
	95B 867 212 G CDR	Black/Carrera Red			+VO
	95B 867 212 G CDS	Agate Grey/Pebble Grey			+VQ
	95B 867 212 G CDT	Saddle Tan/Luxor Beige			+VP
(1)	95B 867 211 L	Door trim panel	/L	1	I3Y0/9MA/9VL
		Leather			
		two-colour			
	95B 867 211 L CDR	Black/Carrera Red			+VO
	95B 867 211 L CDS	Agate Grey/Pebble Grey			+VQ
	95B 867 211 L CDT	Saddle Tan/Luxor Beige			+VP
(1)	95B 867 212 L	Door trim panel	/R	1	I3Y0/9MA/9VL
		Leather			
		two-colour			
	95B 867 212 L CDR	Black/Carrera Red			+VO
	95B 867 212 L CDS	Agate Grey/Pebble Grey			+VQ
	95B 867 212 L CDT	Saddle Tan/Luxor Beige			+VP
(1)	95B 867 211 Q	Door trim panel	/L	1	I3Y4/9MA/9VL
		Leather			
		two-colour			
	95B 867 211 Q CDR	Black/Carrera Red			+VO
	95B 867 211 Q CDS	Agate Grey/Pebble Grey			+VQ
	95B 867 211 Q CDT	Saddle Tan/Luxor Beige			+VP
(1)	95B 867 212 Q	Door trim panel	/R	1	I3Y4/9MA/9VL
		Leather			
		two-colour			
	95B 867 212 Q CDR	Black/Carrera Red			+VO
	95B 867 212 Q CDS	Agate Grey/Pebble Grey			+VQ
	95B 867 212 Q CDT	Saddle Tan/Luxor Beige			+VP
(1)	95B 867 211 AA	Door trim panel	/L	1	I3Y0/9MA/9VJ
		Leather			
		two-colour			
	95B 867 211 AA CDR	Black/Carrera Red			+VO
	95B 867 211 AA CDS	Agate Grey/Pebble Grey			+VQ
	95B 867 211 AA CDT	Saddle Tan/Luxor Beige			+VP
(1)	95B 867 212 AA	Door trim panel	/R	1	I3Y0/9MA/9VJ
		Leather			
		two-colour			
	95B 867 212 AA CDR	Black/Carrera Red			+VO
	95B 867 212 AA CDS	Agate Grey/Pebble Grey			+VQ

Model: 95B **Model life 2014>>**

Pos	Part Number	Description	Remark	Qty	Model
	95B 867 212 AA CDT	Saddle Tan/Luxor Beige			+VP
(1)	95B 867 211 AE	Door trim panel	/L	1	I3Y4/9MA/9VJ
		Leather			
		two-colour			
	95B 867 211 AE CDR	Black/Carrera Red			+VO
	95B 867 211 AE CDS	Agate Grey/Pebble Grey			+VQ
	95B 867 211 AE CDT	Saddle Tan/Luxor Beige			+VP
(1)	95B 867 212 AE	Door trim panel	/R	1	I3Y4/9MA/9VJ
		Leather			
		two-colour			
	95B 867 212 AE CDR	Black/Carrera Red			+VO
	95B 867 212 AE CDS	Agate Grey/Pebble Grey			+VQ
	95B 867 212 AE CDT	Saddle Tan/Luxor Beige			+VP
(1)	95B 867 305 C	Door trim panel	/L	1	I3Y0/9MB/9VK
		Leather			
		two-colour			
	95B 867 305 C CDR	Black/Carrera Red			+VO
	95B 867 305 C CDS	Agate Grey/Pebble Grey			+VQ
	95B 867 305 C CDT	Saddle Tan/Luxor Beige			+VP
(1)	95B 867 306 C	Door trim panel	/R	1	I3Y0/9MB/9VK
		Leather			
		two-colour			
	95B 867 306 C CDR	Black/Carrera Red			+VO
	95B 867 306 C CDS	Agate Grey/Pebble Grey			+VQ
	95B 867 306 C CDT	Saddle Tan/Luxor Beige			+VP
(1)	95B 867 305 G	Door trim panel	/L	1	I3Y4/9MB/9VK
		Leather			
		two-colour			
	95B 867 305 G CDR	Black/Carrera Red			+VO
	95B 867 305 G CDS	Agate Grey/Pebble Grey			+VQ
	95B 867 305 G CDT	Saddle Tan/Luxor Beige			+VP
(1)	95B 867 306 G	Door trim panel	/R	1	I3Y4/9MB/9VK
		Leather			
		two-colour			
	95B 867 306 G CDR	Black/Carrera Red			+VO
	95B 867 306 G CDS	Agate Grey/Pebble Grey			+VQ
	95B 867 306 G CDT	Saddle Tan/Luxor Beige			+VP
(1)	95B 867 305 L	Door trim panel	/L	1	I3Y0/9MB/9VL
		Leather			
		two-colour			
	95B 867 305 L CDR	Black/Carrera Red			+VO
	95B 867 305 L CDS	Agate Grey/Pebble Grey			+VQ
	95B 867 305 L CDT	Saddle Tan/Luxor Beige			+VP
(1)	95B 867 306 L	Door trim panel	/R	1	I3Y0/9MB/9VL
		Leather			
		two-colour			
	95B 867 306 L CDR	Black/Carrera Red			+VO
	95B 867 306 L CDS	Agate Grey/Pebble Grey			+VQ
	95B 867 306 L CDT	Saddle Tan/Luxor Beige			+VP
(1)	95B 867 305 Q	Door trim panel	/L	1	I3Y4/9MB/9VL
		Leather			
		two-colour			
	95B 867 305 Q CDR	Black/Carrera Red			+VO
	95B 867 305 Q CDS	Agate Grey/Pebble Grey			+VQ
	95B 867 305 Q CDT	Saddle Tan/Luxor Beige			+VP
(1)	95B 867 306 Q	Door trim panel	/R	1	I3Y4/9MB/9VL
		Leather			
		two-colour			
	95B 867 306 Q CDR	Black/Carrera Red			+VO
	95B 867 306 Q CDS	Agate Grey/Pebble Grey			+VQ
	95B 867 306 Q CDT	Saddle Tan/Luxor Beige			+VP
(1)	95B 867 305 AA	Door trim panel	/L	1	I3Y0/9MB/9VJ
		Leather			

Model: 95B **Model life 2014>>**

Pos	Part Number	Description	Remark	Qty	Model
		two-colour			
	95B 867 305 AA CDR	Black/Carrera Red			+VO
	95B 867 305 AA CDS	Agate Grey/Pebble Grey			+VQ
	95B 867 305 AA CDT	Saddle Tan/Luxor Beige			+VP
(1)	95B 867 306 AA	Door trim panel	/R	1	I3Y0/9MB/9VJ
		Leather			
		two-colour			
	95B 867 306 AA CDR	Black/Carrera Red			+VO
	95B 867 306 AA CDS	Agate Grey/Pebble Grey			+VQ
	95B 867 306 AA CDT	Saddle Tan/Luxor Beige			+VP
(1)	95B 867 305 AE	Door trim panel	/L	1	I3Y4/9MB/9VJ
		Leather			
		two-colour			
	95B 867 305 AE CDR	Black/Carrera Red			+VO
	95B 867 305 AE CDS	Agate Grey/Pebble Grey			+VQ
	95B 867 305 AE CDT	Saddle Tan/Luxor Beige			+VP
(1)	95B 867 306 AE	Door trim panel	/R	1	I3Y4/9MB/9VJ
		Leather			
		two-colour			
	95B 867 306 AE CDR	Black/Carrera Red			+VO
	95B 867 306 AE CDS	Agate Grey/Pebble Grey			+VQ
	95B 867 306 AE CDT	Saddle Tan/Luxor Beige			+VP
2	95B 867 373 A	Armrest	/L	1	I3LE/3LH/3LT
		Leather			
	95B 867 373 A OG3	Carrera Red			+VO
	95B 867 373 A OD4	Pebble Grey			+VQ
	95B 867 373 A 7J0	Luxor Beige			+VP
(2)	95B 867 374 A	Armrest	/R	1	I3LE/3LH/3LT
		Leather			
	95B 867 374 A OG3	Carrera Red			+VO
	95B 867 374 A OD4	Pebble Grey			+VQ
	95B 867 374 A 7J0	Luxor Beige			+VP
3	N 911 809 01	Oval-head screw		1	
		M5X20-W			
4	N 907 758 01	Tapping screw		1	
		ST4,8X19-F			
5	N 106 213 01	Expander nut		1	
		5,0-F			

Illustration: 808-80

PORSCHE

Model: 95B **Model life 2014>>**

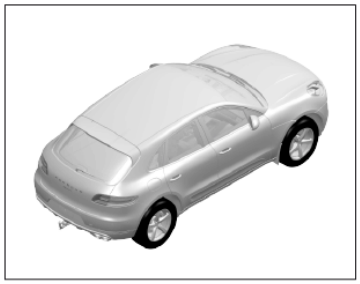

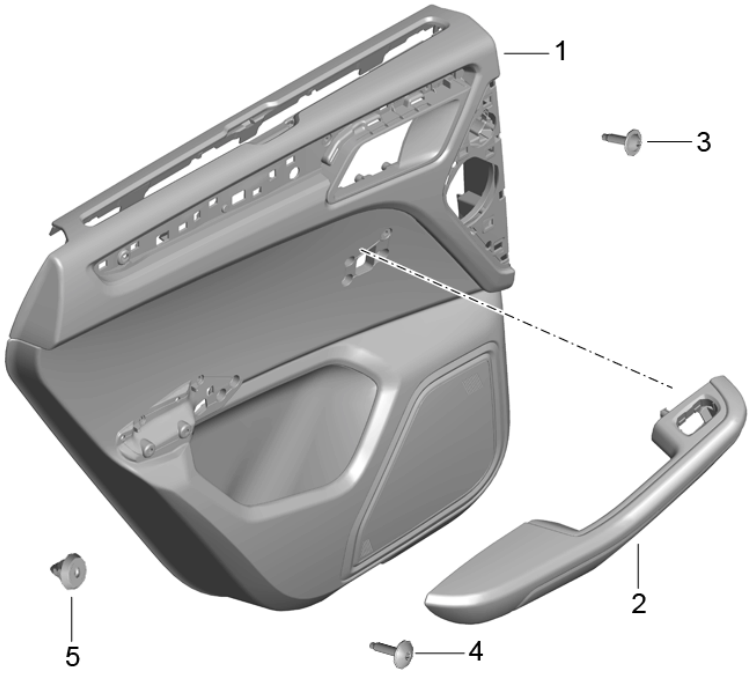

Model: 95B **Model life 2014>>**

Pos	Part Number	Description	Remark	Qty	Model
		Door trim panel			I3LS
		Rear			
		Leather/			
		Alcantara			
1	95B 867 211 AF	Door trim panel	/L	1	I3Y0/9MA/9VK
		Leather			
	95B 867 211 AF A11	Black			+FF
	95B 867 211 AF 7J0	Luxor Beige			+FH
	95B 867 211 AF OA1	Agate Grey			+FM
	95B 867 211 AF OK6	Saddle Tan			+FI
	95B 867 211 AF HHX	Black/Carmine Red			+FL
	95B 867 211 AF HAG	Black/Rhodium Silver			+FE,+TS
	95B 867 211 AF HAT	Black/Carrera Red			+TR
(1)	95B 867 212 AF	Door trim panel	/R	1	I3Y0/9MA/9VK
		Leather			
	95B 867 212 AF A11	Black			+FF
	95B 867 212 AF 7J0	Luxor Beige			+FH
	95B 867 212 AF OA1	Agate Grey			+FM
	95B 867 212 AF OK6	Saddle Tan			+FI
	95B 867 212 AF HHX	Black/Carmine Red			+FL
	95B 867 212 AF HAG	Black/Rhodium Silver			+FE,+TS
	95B 867 212 AF HAT	Black/Carrera Red			+TR
(1)	95B 867 211 AH	Door trim panel	/L	1	I3Y4/9MA/9VK
		Leather			
	95B 867 211 AH A11	Black			+FF
	95B 867 211 AH 7J0	Luxor Beige			+FH
	95B 867 211 AH OA1	Agate Grey			+FM
	95B 867 211 AH OK6	Saddle Tan			+FI
	95B 867 211 AH HHX	Black/Carmine Red			+FL
	95B 867 211 AH HAG	Black/Rhodium Silver			+FE,+TS
	95B 867 211 AH HAT	Black/Carrera Red			+TR
(1)	95B 867 212 AH	Door trim panel	/R	1	I3Y4/9MA/9VK
		Leather			
	95B 867 212 AH A11	Black			+FF
	95B 867 212 AH 7J0	Luxor Beige			+FH
	95B 867 212 AH OA1	Agate Grey			+FM
	95B 867 212 AH OK6	Saddle Tan			+FI
	95B 867 212 AH HHX	Black/Carmine Red			+FL
	95B 867 212 AH HAG	Black/Rhodium Silver			+FE,+TS
	95B 867 212 AH HAT	Black/Carrera Red			+TR
(1)	95B 867 211 AJ	Door trim panel	/L	1	I3Y0/9MA/9VL
		Leather			
	95B 867 211 AJ A11	Black			+FF
	95B 867 211 AJ 7J0	Luxor Beige			+FH
	95B 867 211 AJ OA1	Agate Grey			+FM
	95B 867 211 AJ OK6	Saddle Tan			+FI
	95B 867 211 AJ HHX	Black/Carmine Red			+FL
	95B 867 211 AJ HAG	Black/Rhodium Silver			+FE,+TS
	95B 867 211 AJ HAT	Black/Carrera Red			+TR
(1)	95B 867 212 AJ	Door trim panel	/R	1	I3Y0/9MA/9VL
		Leather			
	95B 867 212 AJ A11	Black			+FF
	95B 867 212 AJ 7J0	Luxor Beige			+FH
	95B 867 212 AJ OA1	Agate Grey			+FM
	95B 867 212 AJ OK6	Saddle Tan			+FI
	95B 867 212 AJ HHX	Black/Carmine Red			+FL
	95B 867 212 AJ HAG	Black/Rhodium Silver			+FE,+TS
	95B 867 212 AJ HAT	Black/Carrera Red			+TR
(1)	95B 867 211 AK	Door trim panel	/L	1	I3Y4/9MA/9VL
		Leather			
	95B 867 211 AK A11	Black			+FF
	95B 867 211 AK 7J0	Luxor Beige			+FH
	95B 867 211 AK OA1	Agate Grey			+FM

Model: 95B **Model life 2014>>**

Pos	Part Number	Description	Remark	Qty	Model
	95B 867 211 AK OK6	Saddle Tan			+FI
	95B 867 211 AK HHX	Black/Carmine Red			+FL
	95B 867 211 AK HAG	Black/Rhodium Silver			+FE,+TS
	95B 867 211 AK HAT	Black/Carrera Red			+TR
(1)	95B 867 212 AK	Door trim panel	/R	1	I3Y4/9MA/9VL
		Leather			
	95B 867 212 AK A11	Black			+FF
	95B 867 212 AK 7J0	Luxor Beige			+FH
	95B 867 212 AK OA1	Agate Grey			+FM
	95B 867 212 AK OK6	Saddle Tan			+FI
	95B 867 212 AK HHX	Black/Carmine Red			+FL
	95B 867 212 AK HAG	Black/Rhodium Silver			+FE,+TS
	95B 867 212 AK HAT	Black/Carrera Red			+TR
(1)	95B 867 211 AL	Door trim panel	/L	1	I3Y0/9MA/9VJ
		Leather			
	95B 867 211 AL A11	Black			+FF
	95B 867 211 AL 7J0	Luxor Beige			+FH
	95B 867 211 AL OA1	Agate Grey			+FM
	95B 867 211 AL OK6	Saddle Tan			+FI
	95B 867 211 AL HHX	Black/Carmine Red			+FL
	95B 867 211 AL HAG	Black/Rhodium Silver			+FE,+TS
	95B 867 211 AL HAT	Black/Carrera Red			+TR
(1)	95B 867 212 AL	Door trim panel	/R	1	I3Y0/9MA/9VJ
		Leather			
	95B 867 212 AL A11	Black			+FF
	95B 867 212 AL 7J0	Luxor Beige			+FH
	95B 867 212 AL OA1	Agate Grey			+FM
	95B 867 212 AL OK6	Saddle Tan			+FI
	95B 867 212 AL HHX	Black/Carmine Red			+FL
	95B 867 212 AL HAG	Black/Rhodium Silver			+FE,+TS
	95B 867 212 AL HAT	Black/Carrera Red			+TR
(1)	95B 867 211 AG	Door trim panel	/L	1	I3Y4/9MA/9VJ
		Leather			
	95B 867 211 AG A11	Black			+FF
	95B 867 211 AG 7J0	Luxor Beige			+FH
	95B 867 211 AG OA1	Agate Grey			+FM
	95B 867 211 AG OK6	Saddle Tan			+FI
	95B 867 211 AG HHX	Black/Carmine Red			+FL
	95B 867 211 AG HAG	Black/Rhodium Silver			+FE,+TS
	95B 867 211 AG HAT	Black/Carrera Red			+TR
(1)	95B 867 212 AG	Door trim panel	/R	1	I3Y4/9MA/9VJ
		Leather			
	95B 867 212 AG A11	Black			+FF
	95B 867 212 AG 7J0	Luxor Beige			+FH
	95B 867 212 AG OA1	Agate Grey			+FM
	95B 867 212 AG OK6	Saddle Tan			+FI
	95B 867 212 AG HHX	Black/Carmine Red			+FL
	95B 867 212 AG HAG	Black/Rhodium Silver			+FE,+TS
	95B 867 212 AG HAT	Black/Carrera Red			+TR
(1)	95B 867 305 AF	Door trim panel	/L	1	I3Y0/9MB/9VK
		Leather			
	95B 867 305 AF A11	Black			+FF
	95B 867 305 AF 7J0	Luxor Beige			+FH
	95B 867 305 AF OA1	Agate Grey			+FM
	95B 867 305 AF OK6	Saddle Tan			+FI
	95B 867 305 AF HHX	Black/Carmine Red			+FL
	95B 867 305 AF HAG	Black/Rhodium Silver			+FE,+TS
	95B 867 305 AF HAT	Black/Carrera Red			+TR
(1)	95B 867 306 AF	Door trim panel	/R	1	I3Y0/9MB/9VK
		Leather			
	95B 867 306 AF A11	Black			+FF
	95B 867 306 AF 7J0	Luxor Beige			+FH
	95B 867 306 AF OA1	Agate Grey			+FM

Model: 95B **Model life 2014>>**

Pos	Part Number	Description	Remark	Qty	Model
	95B 867 306 AF OK6	Saddle Tan			+FI
	95B 867 306 AF HHX	Black/Carmine Red			+FL
	95B 867 306 AF HAG	Black/Rhodium Silver			+FE,+TS
	95B 867 306 AF HAT	Black/Carrera Red			+TR
(1)	95B 867 305 AH	Door trim panel	/L	1	I3Y4/9MB/9VK
		Leather			
	95B 867 305 AH A11	Black			+FF
	95B 867 305 AH 7J0	Luxor Beige			+FH
	95B 867 305 AH OA1	Agate Grey			+FM
	95B 867 305 AH OK6	Saddle Tan			+FI
	95B 867 305 AH HHX	Black/Carmine Red			+FL
	95B 867 305 AH HAG	Black/Rhodium Silver			+FE,+TS
	95B 867 305 AH HAT	Black/Carrera Red			+TR
(1)	95B 867 306 AH	Door trim panel	/R	1	I3Y4/9MB/9VK
		Leather			
	95B 867 306 AH A11	Black			+FF
	95B 867 306 AH 7J0	Luxor Beige			+FH
	95B 867 306 AH OA1	Agate Grey			+FM
	95B 867 306 AH OK6	Saddle Tan			+FI
	95B 867 306 AH HHX	Black/Carmine Red			+FL
	95B 867 306 AH HAG	Black/Rhodium Silver			+FE,+TS
	95B 867 306 AH HAT	Black/Carrera Red			+TR
(1)	95B 867 305 AJ	Door trim panel	/L	1	I3Y0/9MB/9VL
		Leather			
	95B 867 305 AJ A11	Black			+FF
	95B 867 305 AJ 7J0	Luxor Beige			+FH
	95B 867 305 AJ OA1	Agate Grey			+FM
	95B 867 305 AJ OK6	Saddle Tan			+FI
	95B 867 305 AJ HHX	Black/Carmine Red			+FL
	95B 867 305 AJ HAG	Black/Rhodium Silver			+FE,+TS
	95B 867 305 AJ HAT	Black/Carrera Red			+TR
(1)	95B 867 306 AJ	Door trim panel	/R	1	I3Y0/9MB/9VL
		Leather			
	95B 867 306 AJ A11	Black			+FF
	95B 867 306 AJ 7J0	Luxor Beige			+FH
	95B 867 306 AJ OA1	Agate Grey			+FM
	95B 867 306 AJ OK6	Saddle Tan			+FI
	95B 867 306 AJ HHX	Black/Carmine Red			+FL
	95B 867 306 AJ HAG	Black/Rhodium Silver			+FE,+TS
	95B 867 306 AJ HAT	Black/Carrera Red			+TR
(1)	95B 867 305 AK	Door trim panel	/L	1	I3Y4/9MB/9VL
		Leather			
	95B 867 305 AK A11	Black			+FF
	95B 867 305 AK 7J0	Luxor Beige			+FH
	95B 867 305 AK OA1	Agate Grey			+FM
	95B 867 305 AK OK6	Saddle Tan			+FI
	95B 867 305 AK HHX	Black/Carmine Red			+FL
	95B 867 305 AK HAG	Black/Rhodium Silver			+FE,+TS
	95B 867 305 AK HAT	Black/Carrera Red			+TR
(1)	95B 867 306 AK	Door trim panel	/R	1	I3Y4/9MB/9VL
		Leather			
	95B 867 306 AK A11	Black			+FF
	95B 867 306 AK 7J0	Luxor Beige			+FH
	95B 867 306 AK OA1	Agate Grey			+FM
	95B 867 306 AK OK6	Saddle Tan			+FI
	95B 867 306 AK HHX	Black/Carmine Red			+FL
	95B 867 306 AK HAG	Black/Rhodium Silver			+FE,+TS
	95B 867 306 AK HAT	Black/Carrera Red			+TR
(1)	95B 867 305 AL	Door trim panel	/L	1	I3Y0/9MB/9VJ
		Leather			
	95B 867 305 AL A11	Black			+FF
	95B 867 305 AL 7J0	Luxor Beige			+FH
	95B 867 305 AL OA1	Agate Grey			+FM

Model: 95B **Model life 2014>>**

Pos	Part Number	Description	Remark	Qty	Model
	95B 867 305 AL OK6	Saddle Tan			+FI
	95B 867 305 AL HHX	Black/Carmine Red			+FL
	95B 867 305 AL HAG	Black/Rhodium Silver			+FE,+TS
	95B 867 305 AL HAT	Black/Carrera Red			+TR
(1)	95B 867 306 AL	Door trim panel	/R	1	I3Y0/9MB/9VJ
		Leather			
	95B 867 306 AL A11	Black			+FF
	95B 867 306 AL 7J0	Luxor Beige			+FH
	95B 867 306 AL OA1	Agate Grey			+FM
	95B 867 306 AL OK6	Saddle Tan			+FI
	95B 867 306 AL HHX	Black/Carmine Red			+FL
	95B 867 306 AL HAG	Black/Rhodium Silver			+FE,+TS
	95B 867 306 AL HAT	Black/Carrera Red			+TR
(1)	95B 867 305 AG	Door trim panel	/L	1	I3Y4/9MB/9VJ
		Leather			
	95B 867 305 AG A11	Black			+FF
	95B 867 305 AG 7J0	Luxor Beige			+FH
	95B 867 305 AG OA1	Agate Grey			+FM
	95B 867 305 AG OK6	Saddle Tan			+FI
	95B 867 305 AG HHX	Black/Carmine Red			+FL
	95B 867 305 AG HAG	Black/Rhodium Silver			+FE,+TS
	95B 867 305 AG HAT	Black/Carrera Red			+TR
(1)	95B 867 306 AG	Door trim panel	/R	1	I3Y4/9MB/9VJ
		Leather			
	95B 867 306 AG A11	Black			+FF
	95B 867 306 AG 7J0	Luxor Beige			+FH
	95B 867 306 AG OA1	Agate Grey			+FM
	95B 867 306 AG OK6	Saddle Tan			+FI
	95B 867 306 AG HHX	Black/Carmine Red			+FL
	95B 867 306 AG HAG	Black/Rhodium Silver			+FE,+TS
	95B 867 306 AG HAT	Black/Carrera Red			+TR
2	95B 867 373 G	Armrest	/L	1	I4AH
		Alcantara			
	95B 867 373 G 2W0	Black			+FF
	95B 867 373 G OU5	Agate Grey			+FM
	95B 867 373 G 9U1	Luxor Beige			+FH
	95B 867 373 G OP2	Saddle Tan			+FI
	95B 867 373 G HMO	Black/Carmine Red			+FL
	95B 867 373 G HNO	Black/Rhodium Silver			+FE,+TS
	95B 867 373 G HYI	Black/Carrera Red			+TR
2	95B 867 374 G	Armrest	/R	1	I4AH
		Alcantara			
	95B 867 374 G 2W0	Black			+FF
	95B 867 374 G OU5	Agate Grey			+FM
	95B 867 374 G 9U1	Luxor Beige			+FH
	95B 867 374 G OP2	Saddle Tan			+FI
	95B 867 374 G HMO	Black/Carmine Red			+FL
	95B 867 374 G HNO	Black/Rhodium Silver			+FE,+TS
	95B 867 374 G HYI	Black/Carrera Red			+TR
3	N 911 809 01	Oval-head screw		1	
		M5X20-W			
4	N 907 758 01	Tapping screw		1	
		ST4,8X19-F			
5	N 106 213 01	Expander nut		1	
		5,0-F			

Illustration: 808-90

PORSCHE

Model: 95B **Model life 2014>>**

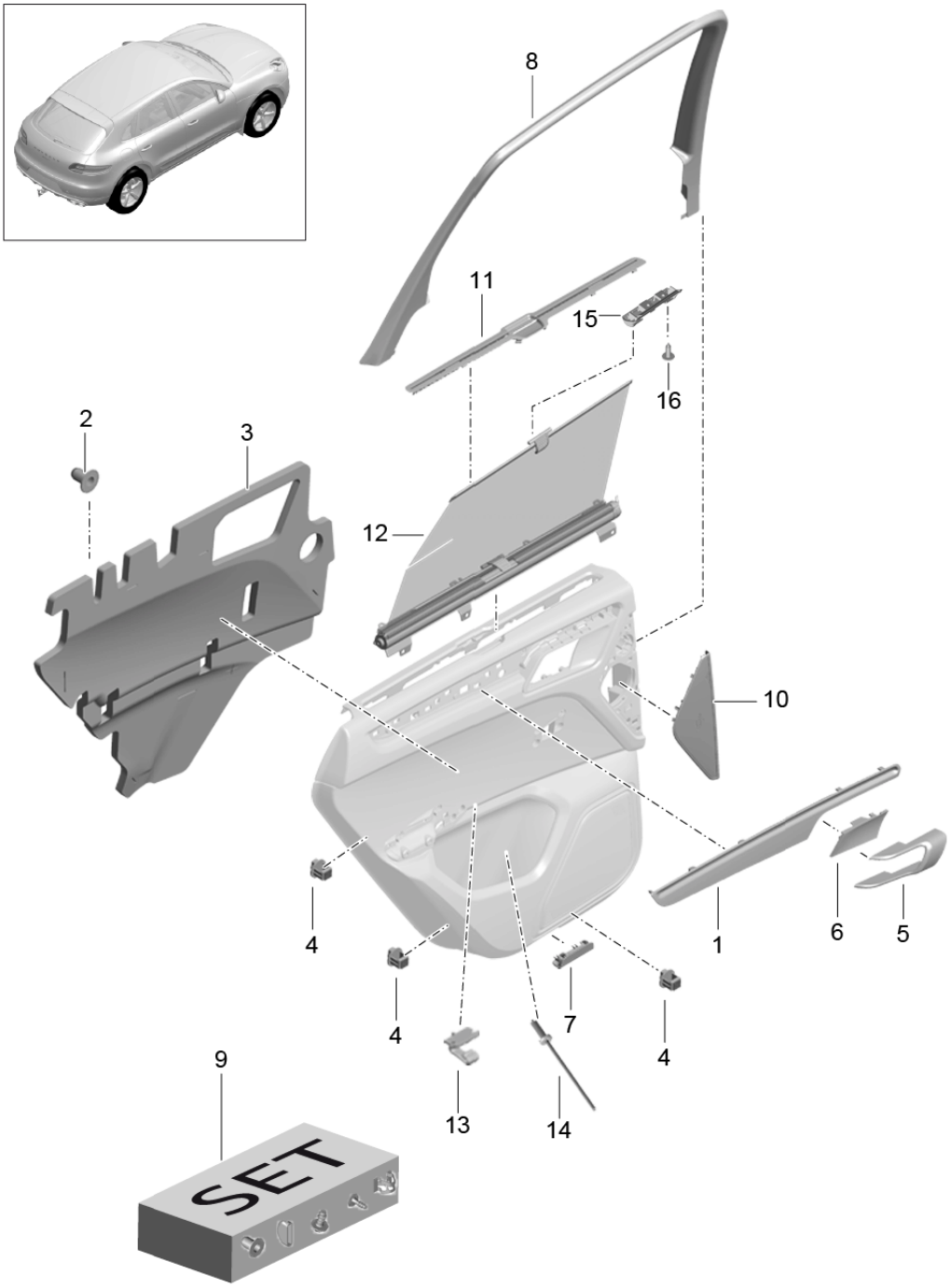

Model: 95B **Model life 2014>>**

Pos	Part Number	Description	Remark	Qty	Model
		Accessories			
		Door trim panel			
		Rear			
1	95B 867 061	Moulding	/L	1	I5MA
		Paint			
	95B 867 061 5Q0	Black			
(1)	95B 867 062	Moulding	/R	1	I5MA
		Paint			
	95B 867 062 5Q0	Black			
(1)	95B 867 061 A	Moulding	/L	1	I5MP
	95B 867 061 A OE9	American Walnut			
(1)	95B 867 062 A	Moulding	/R	1	I5MP
	95B 867 062 A OE9	American Walnut			
(1)	95B 867 061 C	Moulding	/L	1	I5MH
	95B 867 061 C OH3	Carbon			
(1)	95B 867 062 C	Moulding	/R	1	I5MH
	95B 867 062 C OH3	Carbon			
(1)	95B 867 061 D	Moulding	/L	1	I5TL
	95B 867 061 D OT1	Piano Black, high-gloss			
(1)	95B 867 062 D	Moulding	/R	1	I5TL
	95B 867 062 D OT1	Piano Black, high-gloss			
(1)	95B 867 061 E	Moulding	/L	1	I5TE
	95B 867 061 E U03	Aluminium, brushed			
(1)	95B 867 062 E	Moulding	/R	1	I5TE
	95B 867 062 E U03	Aluminium, brushed			
(1)	95B 867 061 F	Moulding	/L	1	I7TK
	95B 867 061 F OA7	Light Oak			
(1)	95B 867 062 F	Moulding	/R	1	I7TK
	95B 867 062 F OA7	Light Oak			
(1)	95B 867 061 J	Moulding	/L	1	I5TH
	95B 867 061 J OR2	Aluminium Black			
(1)	95B 867 062 J	Moulding	/R	1	I5TH
	95B 867 062 J OR2	Aluminium Black			
2	958 552 900 00	Grommet		2	
3	95B 863 981	Insulation		2	
4	970 537 557 00	Support		16	
		Lining			
5	95B 837 019	Door opener	/L	1	
	95B 837 019 GT8	Galvano silver			
(5)	95B 837 020	Door opener	/R	1	
	95B 837 020 GT8	Galvano silver			
6	95B 837 095 B	Cover	/L	1	I9MA
		Door opener			
	95B 837 095 B 1E0	Black			
(6)	95B 837 096 B	Trim cover	/R	1	I9MA
		Door opener			
	95B 837 096 B 1E0	Black			
(6)	95B 837 095 C	Trim cover	/L	1	I9MB
		Door opener			
	95B 837 095 C 1E0	Black			
(6)	95B 837 096 C	Trim cover	/R	1	I9MB
		Door opener			
	95B 837 096 C 1E0	Black			
7	1K0 947 419 A	Reflector		2	
(7)	1K0 947 411 C	Warning light		2	
		Door			
8	95B 867 671 B	Lining	/L	1	I3Y0
		Window frame			
		Basic			
	95B 867 671 B 1E0	Black			
(8)	95B 867 672 B	Lining	/R	1	I3Y0
		Window frame			
		Basic			

Model: 95B **Model life 2014>>**

Pos	Part Number	Description	Remark	Qty	Model
	95B 867 672 B 1E0	Black			
(8)	95B 867 671 C	Lining Window frame with Shade	/L	1	I3Y4
	95B 867 671 C 1E0	Black			
(8)	95B 867 672 C	Lining Window frame with Shade	/R	1	I3Y4
	95B 867 672 C 1E0	Black			
9	95B 898 101	Repair kit Door trim panel Rear		1	
10	95B 035 793	Loudspeaker grille MID-RANGE speaker	/L	1	
	95B 035 793 1E0	Black			+VC,+VJ,+VF, +VI,+VU,+VK, +VX,+VZ
	95B 035 793 4H0	Luxor Beige			+VE,+VH,+VM, +VP
	95B 035 793 OP1	Agate Grey			+VD,+VG,+VL
	95B 035 793 OM8	Saddle Tan			+VN
	95B 035 793 7N0	Espresso			+VR
	95B 035 793 OV4	Pebble Grey			+VQ
	95B 035 793 OW5	Carrera Red			+VO
(10)	95B 035 794	Loudspeaker grille MID-RANGE speaker	/R	1	
	95B 035 794 1E0	Black			+VC,+VJ,+VF, +VI,+VU,+VK, +VX,+VZ
	95B 035 794 4H0	Luxor Beige			+VE,+VH,+VM, +VP
	95B 035 794 OP1	Agate Grey			+VD,+VG,+VL
	95B 035 794 OM8	Saddle Tan			+VN
	95B 035 794 7N0	Espresso			+VR
	95B 035 794 OV4	Pebble Grey			+VQ
	95B 035 794 OW5	Carrera Red			+VO
11	95B 860 379	Cover Shade	/L	1	I3Y4
	95B 860 379 5Q0	Black			+VC,+VJ,+VF, +VI,+VU,+VK, +VO,+VX,+VZ
	95B 860 379 6W0	Luxor Beige			+VE,+VH,+VM
	95B 860 379 OA6	Agate Grey			+VD,+VG,+VL, +VQ
	95B 860 379 OL7	Saddle Tan			+VN,+VP
	95B 860 379 3T0	Espresso			+VR
(11)	95B 860 380	Cover Shade	/R	1	I3Y4
	95B 860 380 5Q0	Black			+VC,+VJ,+VF, +VI,+VU,+VK, +VO,+VX,+VZ
	95B 860 380 6W0	Luxor Beige			+VE,+VH,+VM
	95B 860 380 OA6	Agate Grey			+VD,+VG,+VL, +VQ
	95B 860 380 OL7	Saddle Tan			+VN,+VP
	95B 860 380 3T0	Espresso			+VR
12	95B 861 333	Shade Door trim panel	/L	1	I3Y4
	95B 861 333 3W4	Black			
(12)	95B 861 334	Shade Door trim panel	/R	1	I3Y4

Model: 95B **Model life 2014>>**

Pos	Part Number	Description	Remark	Qty	Model
	95B 861 334 3W4	Black			
13	955 645 982 07	Hook Rear Seat Entertainment Receiver		2	I9WM
	955 645 982 07 1E0	Black			
14	999 190 240 30	Blind rivet 3,2X11,0		4	
15	95B 861 789	Retaining bow Roller		2	
	95B 861 789 1E0	Black			I3Y4
16	WHT 003 434 A	Oval-head screw 3,5X13,0		2	I3Y4

Illustration: 809-00

PORSCHE

Model: 95B **Model life 2014>>**

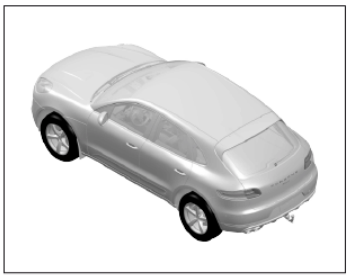

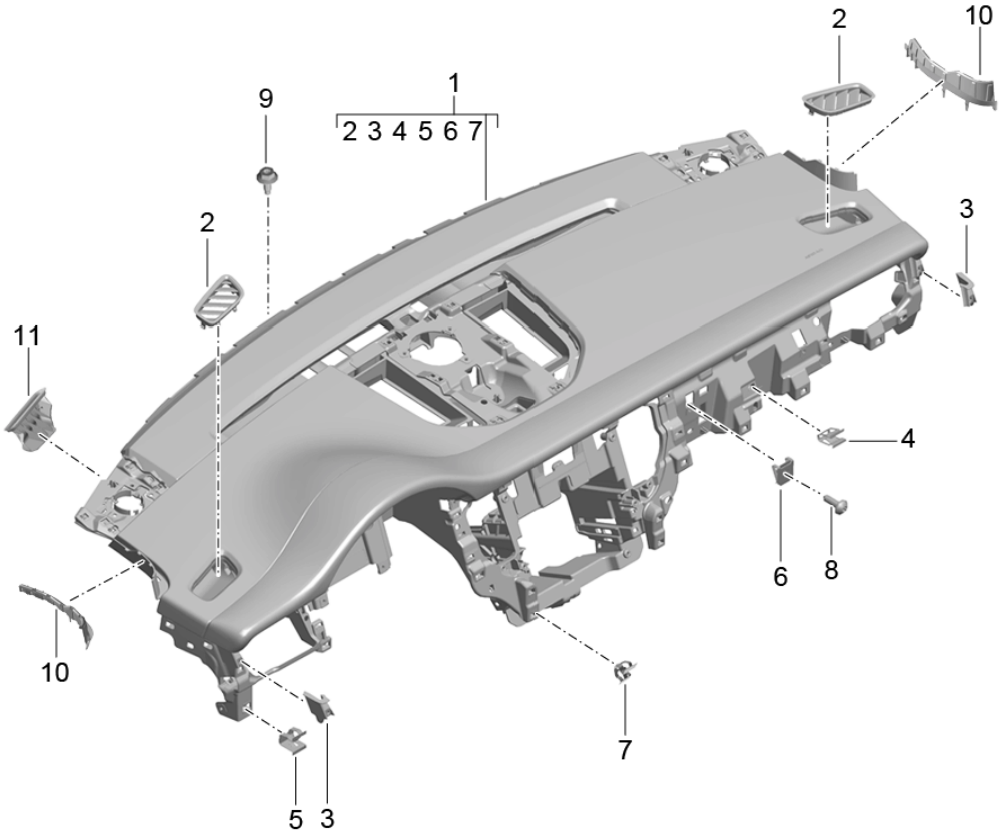

Model: 95B **Model life 2014>>**

Pos	Part Number	Description	Remark	Qty	Model
		Dashboard trim			
		Upper part			
		with			
		Mounting parts			
1	95B 857 003 R	Dashboard trim	/LL -16	1	IL0L/4N1/4N9
		Upper part			
	95B 857 003 R DK4	Black			+VC,+VX
	95B 857 003 R OS2	Agate Grey			+VD
	95B 857 003 R DM5	Luxor Beige			+VE
(1)	95B 857 003 BC	Dashboard trim	/LL 17-	1	IL0L/4N1/4N9
		Upper part			
	95B 857 003 BC DK4	Black			+VC,+VX
	95B 857 003 BC OS2	Agate Grey			+VD
	95B 857 003 BC DM5	Luxor Beige			+VE
(1)	95B 857 003 T	Dashboard trim	/LL -16	1	IL0L/4N2/4N3
					I4N8
		Upper part			
		Leather			
	95B 857 003 T A11	Black			+VF,+VK
	95B 857 003 T OA1	Agate Grey			+VG,+VL
	95B 857 003 T 7J0	Luxor Beige			+VH,+VM
	95B 857 003 T HAT	Black/Carrera Red			+VI,+VU,+VO
	95B 857 003 T HAS	Black/Saddle Tan			+VJ
	95B 857 003 T OK6	Saddle Tan			+VN
	95B 857 003 T HAU	Saddle Tan/Luxor Beige			+VP
	95B 857 003 T HAV	Agate Grey/Pebble Grey			+VQ
(1)	95B 857 003 AL	Dashboard trim	/LL 17-	1	IL0L/4N0/4N2
					I4N3/4N8
		Upper part			
		Leather			
	95B 857 003 AL A11	Black			+VF,+VK,+FA
					+FF
	95B 857 003 AL OA1	Agate Grey			+VG,+VL,+FB
					+FM
	95B 857 003 AL 7J0	Luxor Beige			+VH,+VM,+FC
	95B 857 003 AL HAT	Black/Carrera Red			+VI,+VU,+VO
					+FH,+TR
	95B 857 003 AL OK6	Saddle Tan			+VN,+FI
	95B 857 003 AL HAU	Saddle Tan/Luxor Beige			+VP
	95B 857 003 AL HAV	Agate Grey/Pebble Grey			+VQ
	95B 857 003 AL HSO	Black/Luxor Beige			+VZ
	95B 857 003 AL HHX	Black/Carmine Red			+FL,+FN
	95B 857 003 AL HAG	Black/Rhodium Silver			+FE,+FK,+TS
(1)	95B 857 003 AB	Dashboard trim	/LL -16	1	IL0L/4N5
		Upper part			
		Nature			
		Leather			
	95B 857 003 AB 6J0	Espresso			+VR
(1)	95B 857 003 BE	Dashboard trim	/LL 17-	1	IL0L/4N5
		Upper part			
		Nature			
		Leather			
	95B 857 003 BE 6J0	Espresso			+VR
(1)	95B 857 003 S	Dashboard trim	/RL -16	1	IL0R/4N1/4N9
		Upper part			
	95B 857 003 S DK4	Black			+VC,+VX
	95B 857 003 S OS2	Agate Grey			+VD
	95B 857 003 S DM5	Luxor Beige			+VE
(1)	95B 857 003 AE	Dashboard trim	/RL 17-	1	IL0R/4N1/4N9
		Upper part			
	95B 857 003 AE DK4	Black			+VC,+VX
	95B 857 003 AE OS2	Agate Grey			+VD
	95B 857 003 AE DM5	Luxor Beige			+VE

Model: 95B **Model life 2014>>**

Pos	Part Number	Description	Remark	Qty	Model
(1)	95B 857 003 AA	Dashboard trim	/RL -16	1	IL0R/4N2/4N3
					I4N8
		Upper part			
		Leather			
	95B 857 003 AA A11	Black			+VF,+VK
	95B 857 003 AA OA1	Agate Grey			+VG,+VL
	95B 857 003 AA 7J0	Luxor Beige			+VH,+VM
	95B 857 003 AA HAT	Black/Carrera Red			+VI,+VU,+VO
	95B 857 003 AA HAS	Black/Saddle Tan			+VJ
	95B 857 003 AA OK6	Saddle Tan			+VN
	95B 857 003 AA HAU	Saddle Tan/Luxor Beige			+VP
	95B 857 003 AA HAV	Agate Grey/Pebble Grey			+VQ
(1)	95B 857 003 AG	Dashboard trim	/RL 17-	1	IL0R/4N0/4N2
					I4N3/4N8
		Upper part			
		Leather			
	95B 857 003 AG A11	Black			+VF,+VK,+FA
					+FF
	95B 857 003 AG OA1	Agate Grey			+VG,+VL,+FB
					+FM
	95B 857 003 AG 7J0	Luxor Beige			+VH,+VM,+FC
	95B 857 003 AG HAT	Black/Carrera Red			+VI,+VU,+VO
					+FH,+TR
	95B 857 003 AG OK6	Saddle Tan			+VN,+FI
	95B 857 003 AG HAU	Saddle Tan/Luxor Beige			+VP
	95B 857 003 AG HAV	Agate Grey/Pebble Grey			+VQ
	95B 857 003 AG HSO	Black/Luxor Beige			+VZ
	95B 857 003 AG HHX	Black/Carmine Red			+FL,+FN
	95B 857 003 AG HAG	Black/Rhodium Silver			+FE,+FK,+TS
	95B 857 003 AG HAS	Black/Saddle Tan			+VJ
(1)	95B 857 003 AC	Dashboard trim	/RL -16	1	IL0R/4N5
		Upper part			
		Nature			
		Leather			
	95B 857 003 AC 6J0	Espresso			+VR
(1)	95B 857 003 AJ	Dashboard trim	/RL 17-	1	IL0R/4N5
		Upper part			
		Nature			
		Leather			
	95B 857 003 AJ 6J0	Espresso			+VR
2	95B 819 705 A	Nozzle	/L	1	
	95B 819 705 A 5Q0	Black			+VC,+VJ,+VF,
					+VI,+VU,+VK
					+VO,+VX,+VZ
	95B 819 705 A OA6	Agate Grey			+VD,+VG,+VL,
					+VQ
	95B 819 705 A 6W0	Luxor Beige			+VE,+VH,+VM
	95B 819 705 A OL7	Saddle Tan			+VN,+VP
	95B 819 705 A 3T0	Espresso			+VR
(2)	95B 819 706 A	Nozzle	/R	1	
	95B 819 706 A 5Q0	Black			+VC,+VJ,+VF,
					+VI,+VU,+VK
					+VO,+VX,+VZ
	95B 819 706 A OA6	Agate Grey			+VD,+VG,+VL,
					+VQ
	95B 819 706 A 6W0	Luxor Beige			+VE,+VH,+VM
	95B 819 706 A OL7	Saddle Tan			+VN,+VP
	95B 819 706 A 3T0	Espresso			+VR
3	95B 860 437	Intermediate piece	/L	1	
(3)	95B 860 438	Intermediate piece	/R	1	
4	8T0 853 107	Clamp		19	
5	8E0 853 107	Clamp		3	
6	999 507 556 01	Speed nut		19	

Model: 95B **Model life 2014>>**

Pos	Part Number	Description	Remark	Qty	Model
		M5			
7	999 507 533 02	Clamp		28	
8	N 910 742 01	Fastening screw M5X16		11	
9	N 910 333 01	Hexagon-head bolt M8X22		1	
10	95B 861 874 B	Insert A-pillar	/L	1	
(10)	95B 861 874 C	Insert A-pillar	/R	1	
11	95B 857 155	Support Chassis number		1	

Illustration: 809-05

PORSCHE

Model: 95B **Model life 2014>>**

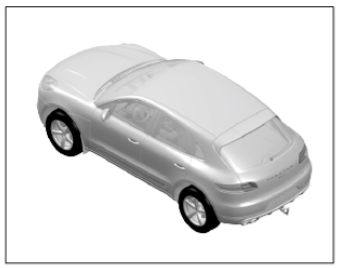

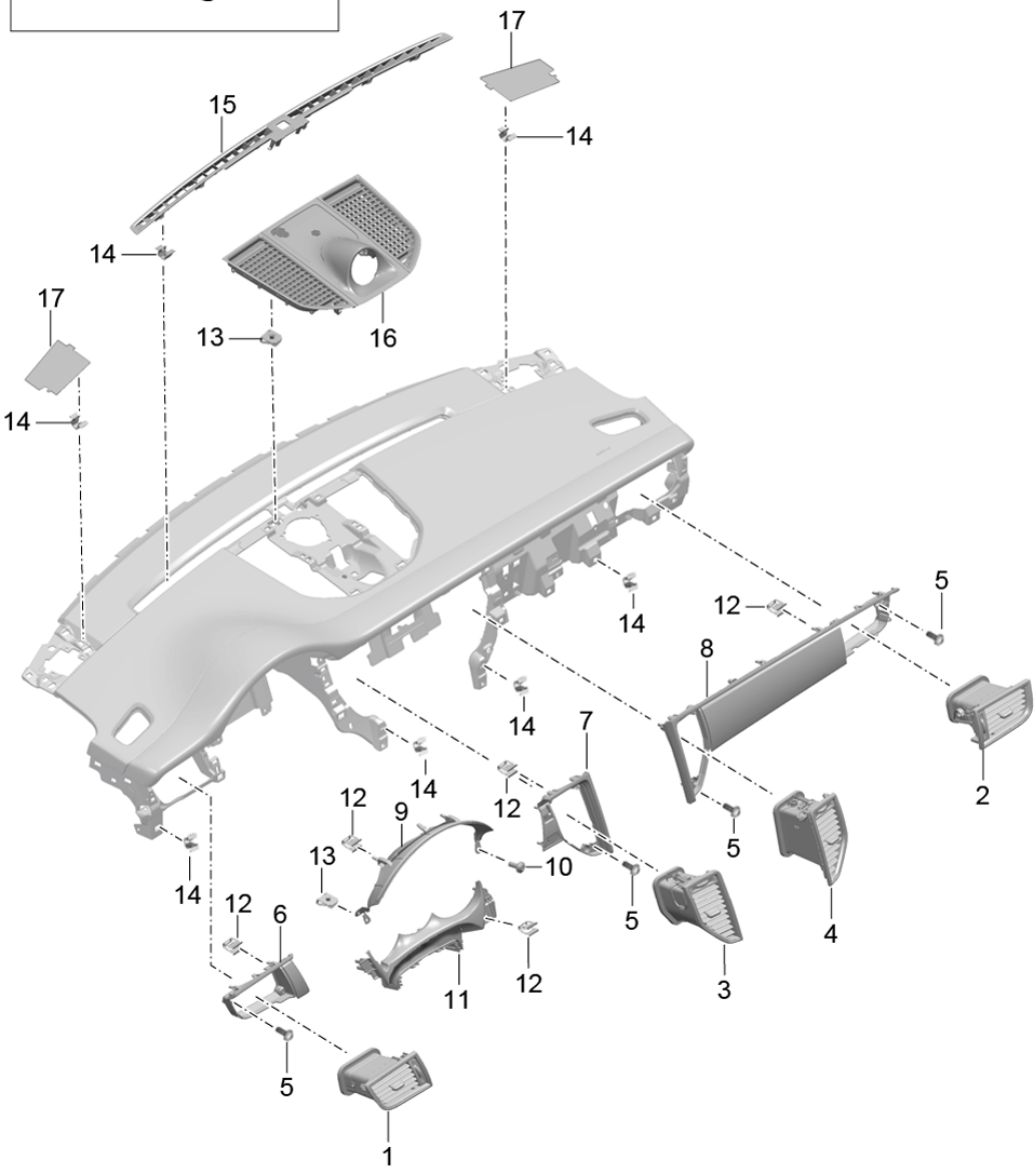

Model: 95B **Model life 2014>>**

Pos	Part Number	Description	Remark	Qty	Model
		Accessories			
		Dashboard trim			
		Upper part			
1	95B 819 701	Side vent	/L	1	I9MA
		Left			
	95B 819 701 G0B	Galvano silver			
		F >>95FLB 09735			
		F >>95FLB 60210			
		F >>95FLB 83197			
		F >>95FLB 94223			
		F >>95FLB 83201			
		F >>95FLB 83228			
		F >>95FLB 83275			
		Information available			
1	95B 819 701 B	Side vent	/L	1	I9MA
		Left			
	95B 819 701 B G0B	Galvano silver			
		F 95FLB 09736>>			
		F 95FLB 60211>>			
		F 95FLB 83198>>			
		F 95FLB 94224>>			
		F 95FLB 83202>>			
		F 95FLB 83229>>			
		F 95FLB 83276>>			
(1)	95B 819 701 A	Side vent	/L	1	I9MB
		Left			
	95B 819 701 A G0B	Galvano silver			
		F >>95FLB 09735			
		F >>95FLB 60210			
		F >>95FLB 83197			
		F >>95FLB 94223			
		F >>95FLB 83201			
		F >>95FLB 83228			
		F >>95FLB 83275			
		Information available			
(1)	95B 819 701 C	Side vent	/L	1	I9MB
		Left			
	95B 819 701 C G0B	Galvano silver			
		F 95FLB 09736>>			
		F 95FLB 60211>>			
		F 95FLB 83198>>			
		F 95FLB 94224>>			
		F 95FLB 83202>>			
		F 95FLB 83229>>			
		F 95FLB 83276>>			
2	95B 819 702	Side vent	/R	1	I9MA
		Right			
	95B 819 702 G0B	Galvano silver			
		F >>95FLB 09735			
		F >>95FLB 60210			
		F >>95FLB 83197			
		F >>95FLB 94223			
		F >>95FLB 83201			
		F >>95FLB 83228			
		F >>95FLB 83275			
		Information available			
2	95B 819 702 B	Side vent	/R	1	I9MA
		Right			
	95B 819 702 B G0B	Galvano silver			
		F 95FLB 09736>>			
		F 95FLB 60211>>			
		F 95FLB 83198>>			
		F 95FLB 94224>>			

Model: 95B **Model life 2014>>**

Pos	Part Number	Description	Remark	Qty	Model
		F 95FLB 83202>>			
		F 95FLB 83229>>			
		F 95FLB 83276>>			
(2)	95B 819 702 A	Side vent	/R	1	I9MB
		Right			
	95B 819 702 A G0B	Galvano silver			
		F >>95FLB 09735			
		F >>95FLB 60210			
		F >>95FLB 83197			
		F >>95FLB 94223			
		F >>95FLB 83201			
		F >>95FLB 83228			
		F >>95FLB 83275			
		Information available			
(2)	95B 819 702 C	Side vent	/R	1	I9MB
		Right			
	95B 819 702 C G0B	Galvano silver			
		F 95FLB 09736>>			
		F 95FLB 60211>>			
		F 95FLB 83198>>			
		F 95FLB 94224>>			
		F 95FLB 83202>>			
		F 95FLB 83229>>			
		F 95FLB 83276>>			
3	95B 819 201	Centre nozzle	/L	1	I9MA
		Left			
	95B 819 201 G0B	Galvano silver			
		F >>95FLB 09735			
		F >>95FLB 60210			
		F >>95FLB 83197			
		F >>95FLB 94223			
		F >>95FLB 83201			
		F >>95FLB 83228			
		F >>95FLB 83275			
		Information available			
3	95B 819 201 B	Centre nozzle	/L	1	I9MA
		Left			
	95B 819 201 B G0B	Galvano silver			
		F 95FLB 09736>>			
		F 95FLB 60211>>			
		F 95FLB 83198>>			
		F 95FLB 94224>>			
		F 95FLB 83202>>			
		F 95FLB 83229>>			
		F 95FLB 83276>>			
(3)	95B 819 201 A	Centre nozzle	/L	1	I9MB
		Left			
	95B 819 201 A G0B	Galvano silver			
		F >>95FLB 09735			
		F >>95FLB 60210			
		F >>95FLB 83197			
		F >>95FLB 94223			
		F >>95FLB 83201			
		F >>95FLB 83228			
		F >>95FLB 83275			
		Information available			
(3)	95B 819 201 C	Centre nozzle	/L	1	I9MB
		Left			
	95B 819 201 C G0B	Galvano silver			
		F 95FLB 09736>>			
		F 95FLB 60211>>			
		F 95FLB 83198>>			
		F 95FLB 94224>>			

Model: 95B **Model life 2014>>**

Pos	Part Number	Description	Remark	Qty	Model
		F 95FLB 83202>>			
		F 95FLB 83229>>			
		F 95FLB 83276>>			
4	95B 819 202	Centre nozzle	/R	1	I9MA
		Right			
	95B 819 202 G0B	Galvano silver			
		F >>95FLB 09735			
		F >>95FLB 60210			
		F >>95FLB 83197			
		F >>95FLB 94223			
		F >>95FLB 83201			
		F >>95FLB 83228			
		F >>95FLB 83275			
		Information available			
4	95B 819 202 B	Centre nozzle	/R	1	I9MA
		Right			
	95B 819 202 B G0B	Galvano silver			
		F 95FLB 09736>>			
		F 95FLB 60211>>			
		F 95FLB 83198>>			
		F 95FLB 94224>>			
		F 95FLB 83202>>			
		F 95FLB 83229>>			
		F 95FLB 83276>>			
4	95B 819 202 A	Centre nozzle	/R	1	I9MB
		Right			
	95B 819 202 A G0B	Galvano silver			
		F >>95FLB 09735			
		F >>95FLB 60210			
		F >>95FLB 83197			
		F >>95FLB 94223			
		F >>95FLB 83201			
		F >>95FLB 83228			
		F >>95FLB 83275			
		Information available			
(4)	95B 819 202 C	Centre nozzle	/R	1	I9MB
		Right			
	95B 819 202 C G0B	Galvano silver			
		F 95FLB 09736>>			
		F 95FLB 60211>>			
		F 95FLB 83198>>			
		F 95FLB 94224>>			
		F 95FLB 83202>>			
		F 95FLB 83229>>			
		F 95FLB 83276>>			
5	N 106 021 01	Oval-head screw		12	
		Nozzle			
6	95B 857 189 H	Moulding		1	IL0L/5MA
		Driver's side			
	95B 857 189 H 5Q0	Black			
(6)	95B 857 189 J	Moulding		1	IL0L/5MH
		Driver's side			
	95B 857 189 J OH3	Carbon			
(6)	95B 857 189 K	Moulding		1	IL0L/5MP
		Driver's side			
	95B 857 189 K OE9	American Walnut			
(6)	95B 857 189 L	Moulding		1	IL0L/5TE
		Driver's side			
	95B 857 189 L U03	Aluminium, brushed			
(6)	95B 857 189 M	Moulding		1	IL0L/5TL
		Driver's side			
	95B 857 189 M OT1	Piano Black, high-gloss			
(6)	95B 857 189 N	Moulding		1	IL0L/7TK

Model: 95B **Model life 2014>>**

Pos	Part Number	Description	Remark	Qty	Model
		Driver's side			
	95B 857 189 N OA7	White Oak, chalked			
(6)	95B 857 189 P	Moulding	17-	1	IL0L/5TH
		Driver's side			
	95B 857 189 P OR2	Aluminium Black			
(6)	95B 857 221 H	Moulding		1	IL0R/5MA
		Driver's side			
	95B 857 221 H 5Q0	Black			
(6)	95B 857 221 J	Moulding		1	IL0R/5MH
		Driver's side			
	95B 857 221 J OH3	Carbon			
(6)	95B 857 221 K	Moulding		1	IL0R/5MP
		Driver's side			
	95B 857 221 K OE9	American Walnut			
(6)	95B 857 221 L	Moulding		1	IL0R/5TE
		Driver's side			
	95B 857 221 L U03	Aluminium, brushed			
(6)	95B 857 221 M	Moulding		1	IL0R/5TL
		Driver's side			
	95B 857 221 M OT1	Piano Black, high-gloss			
(6)	95B 857 221 N	Moulding		1	IL0R/7TK
		Driver's side			
	95B 857 221 N OA7	White Oak, chalked			
(6)	95B 857 221 P	Moulding	17-	1	IL0R/5TH
		Driver's side			
	95B 857 221 P OR2	Aluminium Black			
7	95B 857 190	Moulding	-16	1	IL0L/5MA
		Driver's side			
	95B 857 190 5Q0	Black			
(7)	95B 857 190 G	Moulding	17-	1	IL0L/5MA
		Driver's side			
	95B 857 190 G 5Q0	Black			
(7)	95B 857 190 A	Moulding	-16	1	IL0L/5MH
		Driver's side			
	95B 857 190 A OH3	Carbon			
(7)	95B 857 190 H	Moulding	17-	1	IL0L/5MH
		Driver's side			
	95B 857 190 H OH3	Carbon			
(7)	95B 857 190 B	Moulding	-16	1	IL0L/5MP
		Driver's side			
	95B 857 190 B OE9	American Walnut			
(7)	95B 857 190 J	Moulding	17-	1	IL0L/5MP
		Driver's side			
	95B 857 190 J OE9	American Walnut			
(7)	95B 857 190 D	Moulding	-16	1	IL0L/5TE
		Driver's side			
	95B 857 190 D U03	Aluminium, brushed			
(7)	95B 857 190 K	Moulding	17-	1	IL0L/5TE
		Driver's side			
	95B 857 190 K U03	Aluminium, brushed			
(7)	95B 857 190 E	Moulding	-16	1	IL0L/5TL
		Driver's side			
	95B 857 190 E OT1	Piano Black, high-gloss			
(7)	95B 857 190 L	Moulding	17-	1	IL0L/5TL
		Driver's side			
	95B 857 190 L OT1	Piano Black, high-gloss			
(7)	95B 857 190 F	Moulding	-16	1	IL0L/7TK
		Driver's side			
	95B 857 190 F OA7	White Oak, chalked			
(7)	95B 857 190 M	Moulding	17-	1	IL0L/7TK
		Driver's side			
	95B 857 190 M OA7	White Oak, chalked			
(7)	95B 857 190 P	Moulding	17-	1	IL0L/5TH

Model: 95B **Model life 2014>>**

Pos	Part Number	Description	Remark	Qty	Model
		Driver's side			
	95B 857 190 P OR2	Aluminium Black			
(7)	95B 857 222	Moulding	-16	1	IL0R/5MA
		Driver's side			
	95B 857 222 5Q0	Black			
(7)	95B 857 222 G	Moulding	17-	1	IL0R/5MA
		Driver's side			
	95B 857 222 G 5Q0	Black			
(7)	95B 857 222 A	Moulding	-16	1	IL0R/5MH
		Driver's side			
	95B 857 222 A OH3	Carbon			
(7)	95B 857 222 H	Moulding	17-	1	IL0R/5MH
		Driver's side			
	95B 857 222 H OH3	Carbon			
(7)	95B 857 222 B	Moulding	-16	1	IL0R/5MP
		Driver's side			
	95B 857 222 B OE9	American Walnut			
(7)	95B 857 222 J	Moulding	17-	1	IL0R/5MP
		Driver's side			
	95B 857 222 J OE9	American Walnut			
(7)	95B 857 222 D	Moulding	-16	1	IL0R/5TE
		Driver's side			
	95B 857 222 D U03	Aluminium, brushed			
(7)	95B 857 222 K	Moulding	17-	1	IL0R/5TE
		Driver's side			
	95B 857 222 K U03	Aluminium, brushed			
(7)	95B 857 222 E	Moulding	-16	1	IL0R/5TL
		Driver's side			
	95B 857 222 E OT1	Piano Black, high-gloss			
(7)	95B 857 222 L	Moulding	17-	1	IL0R/5TL
		Driver's side			
	95B 857 222 L OT1	Piano Black, high-gloss			
(7)	95B 857 222 F	Moulding	-16	1	IL0R/7TK
		Driver's side			
	95B 857 222 F OA7	White Oak, chalked			
(7)	95B 857 222 M	Moulding	17-	1	IL0R/7TK
		Driver's side			
	95B 857 222 M OA7	White Oak, chalked			
(7)	95B 857 222 P	Moulding	17-	1	IL0R/5TH
		Driver's side			
	95B 857 222 P OR2	Aluminium Black			
8	95B 857 224 H	Moulding	-16	1	IL0L/5MA
		Passenger's side			
	95B 857 224 H 5Q0	Black			
(8)	95B 857 224 Q	Moulding	17-	1	IL0L/5MA
		Passenger's side			
	95B 857 224 Q 5Q0	Black			
(8)	95B 857 224 J	Moulding	-16	1	IL0L/5MH
		Passenger's side			
	95B 857 224 J OH3	Carbon			
(8)	95B 857 224 R	Moulding	17-	1	IL0L/5MH
		Passenger's side			
	95B 857 224 R OH3	Carbon			
(8)	95B 857 224 K	Moulding	-16	1	IL0L/5MP
		Passenger's side			
	95B 857 224 K OE9	American Walnut			
(8)	95B 857 224 S	Moulding	17-	1	IL0L/5MP
		Passenger's side			
	95B 857 224 S OE9	American Walnut			
(8)	95B 857 224 L	Moulding	-16	1	IL0L/5TE
		Passenger's side			
	95B 857 224 L U03	Aluminium, brushed			
(8)	95B 857 224 T	Moulding	17-	1	IL0L/5TE

Model: 95B **Model life 2014>>**

Pos	Part Number	Description	Remark	Qty	Model
		Passenger's side			
	95B 857 224 T U03	Aluminium, brushed			
(8)	95B 857 224 M	Moulding	-16	1	IL0L/5TL
		Passenger's side			
	95B 857 224 M OT1	Piano Black, high-gloss			
(8)	95B 857 224 AA	Moulding	17-	1	IL0L/5TL
		Passenger's side			
	95B 857 224 AA OT1	Piano Black, high-gloss			
(8)	95B 857 224 N	Moulding	-16	1	IL0L/7TK
		Passenger's side			
	95B 857 224 N OA7	White Oak, chalked			
(8)	95B 857 224 AB	Moulding	17-	1	IL0L/7TK
		Passenger's side			
	95B 857 224 AB OA7	White Oak, chalked			
(8)	95B 857 224 P	Moulding	17-	1	IL0L/5TH
		Passenger's side			
	95B 857 224 P OR2	Aluminium Black			
(8)	95B 857 226 H	Moulding	-16	1	IL0R/5MA
		Passenger's side			
	95B 857 226 H 5Q0	Black			
(8)	95B 857 226 Q	Moulding	17-	1	IL0R/5MA
		Passenger's side			
	95B 857 226 Q 5Q0	Black			
(8)	95B 857 226 J	Moulding	-16	1	IL0R/5MH
		Passenger's side			
	95B 857 226 J OH3	Carbon			
(8)	95B 857 226 R	Moulding	17-	1	IL0R/5MH
		Passenger's side			
	95B 857 226 R OH3	Carbon			
(8)	95B 857 226 K	Moulding	-16	1	IL0R/5MP
		Passenger's side			
	95B 857 226 K OE9	American Walnut			
(8)	95B 857 226 S	Moulding	17-	1	IL0R/5MP
		Passenger's side			
	95B 857 226 S OE9	American Walnut			
(8)	95B 857 226 L	Moulding	-16	1	IL0R/5TE
		Passenger's side			
	95B 857 226 L U03	Aluminium, brushed			
(8)	95B 857 226 T	Moulding	17-	1	IL0R/5TE
		Passenger's side			
	95B 857 226 T U03	Aluminium, brushed			
(8)	95B 857 226 M	Moulding	-16	1	IL0R/5TL
		Passenger's side			
	95B 857 226 M OT1	Piano Black, high-gloss			
(8)	95B 857 226 AA	Moulding	17-	1	IL0R/5TL
		Passenger's side			
	95B 857 226 AA OT1	Piano Black, high-gloss			
(8)	95B 857 226 N	Moulding	-16	1	IL0R/7TK
		Passenger's side			
	95B 857 226 N OA7	White Oak, chalked			
(8)	95B 857 226 AB	Moulding	17-	1	IL0R/7TK
		Passenger's side			
	95B 857 226 AB OA7	White Oak, chalked			
(8)	95B 857 226 P	Moulding	17-	1	IL0R/5TH
		Passenger's side			
	95B 857 226 P OR2	Aluminium Black			
9	95B 857 059 B	Dashboard trim		1	IL0L
		Upper			
	95B 857 059 B 5Q0	Black			
(9)	95B 857 059 C	Dashboard trim		1	IL0R
		Upper			
	95B 857 059 C 5Q0	Black			
10	N 910 742 01	Fastening screw		2	

Model: 95B **Model life 2014>>**

Pos	Part Number	Description	Remark	Qty	Model
		M5X16			
11	95B 857 054 D	Dashboard trim		1	IL0L
		Lower			
	95B 857 054 D 5Q0	Black			
(11)	95B 857 054 E	Dashboard trim		1	IL0R
		Lower			
	95B 857 054 E 5Q0	Black			
12	8T0 853 107	Clamp		X	
13	999 507 556 01	Speed nut		X	
		M5			
14	999 507 533 02	Clamp		X	
15	95B 858 365 A	Defroster trim		1	
	95B 858 365 A 5Q0	Black			+VC,+VJ,+VF,
					+VI,+VU,+VK
					+VO,+VX,+VZ
	95B 858 365 A OA6	Agate Grey			+VD,+VG,+VL,
					+VQ
	95B 858 365 A 6W0	Luxor Beige			+VE,+VH,+VM
	95B 858 365 A OL7	Saddle Tan			+VN,+VP
	95B 858 365 A 3T0	Espresso			+VR
16	95B 858 189 C	Cover		1	IQR1/QR3/QR4
					IQR5
		Centre			
	95B 858 189 C 5Q0	Black			+VC,+VJ,+VF,
					+VI,+VU,+VK,
					+VO,+VX,+VZ
	95B 858 189 C OA6	Agate Grey			+VD,+VG,+VL,
					+VQ
	95B 858 189 C 6W0	Luxor Beige			+VE,+VH,+VM
	95B 858 189 C OL7	Saddle Tan			+VN,+VP
	95B 858 189 C 3T0	Espresso			+VR
(16)	95B 858 189 B	Cover		1	IQR0
		Centre			
	95B 858 189 B 5Q0	Black			+VC,+VJ,+VF,
					+VI,+VU,+VK,
					+VO,+VX,+VZ
	95B 858 189 B OA6	Agate Grey			+VD,+VG,+VL,
					+VQ
	95B 858 189 B 6W0	Luxor Beige			+VE,+VH,+VM
	95B 858 189 B OL7	Saddle Tan			+VN,+VP
	95B 858 189 B 3T0	Espresso			+VR
17	95B 035 405 A	Loudspeaker grille	/L	1	I9VK/9VL
	95B 035 405 A 5Q0	Black			+VC,+VJ,+VF,
					+VI,+VU,+VK
					+VO,+VX,+VZ
	95B 035 405 A OA6	Agate Grey			+VD,+VG,+VL,
					+VQ
	95B 035 405 A 6W0	Luxor Beige			+VE,+VH,+VM
	95B 035 405 A OL7	Saddle Tan			+VN,+VP
	95B 035 405 A 3T0	Espresso			+VR
(17)	95B 035 406 A	Loudspeaker grille	/R	1	I9VK/9VL
	95B 035 406 A 5Q0	Black			+VC,+VJ,+VF,
					+VI,+VU,+VK
					+VO,+VX,+VZ
	95B 035 406 A OA6	Agate Grey			+VD,+VG,+VL,
					+VQ
	95B 035 406 A 6W0	Luxor Beige			+VE,+VH,+VM
	95B 035 406 A OL7	Saddle Tan			+VN,+VP
	95B 035 406 A 3T0	Espresso			+VR
(17)	95B 035 407 A	Loudspeaker grille	/L	1	I9VJ
	95B 035 407 A 5Q0	Black			+VC,+VJ,+VF,
					+VI,+VU,+VK
					+VO,+VX,+VZ

Model: 95B **Model life 2014>>**

Pos	Part Number	Description	Remark	Qty	Model
	95B 035 407 A OA6	Agate Grey			+VD,+VG,+VL, +VQ
	95B 035 407 A 6W0	Luxor Beige			+VE,+VH,+VM
	95B 035 407 A OL7	Saddle Tan			+VN,+VP
	95B 035 407 A 3T0	Espresso			+VR
(17)	95B 035 408 A	Loudspeaker grille	/R	1	I9VJ
	95B 035 408 A 5Q0	Black			+VC,+VJ,+VF, +VI,+VU,+VK +VO,+VX,+VZ
	95B 035 408 A OA6	Agate Grey			+VD,+VG,+VL, +VQ
	95B 035 408 A 6W0	Luxor Beige			+VE,+VH,+VM
	95B 035 408 A OL7	Saddle Tan			+VN,+VP
	95B 035 408 A 3T0	Espresso			+VR

Illustration: 809-10

PORSCHE

Model: 95B **Model life 2014>>**

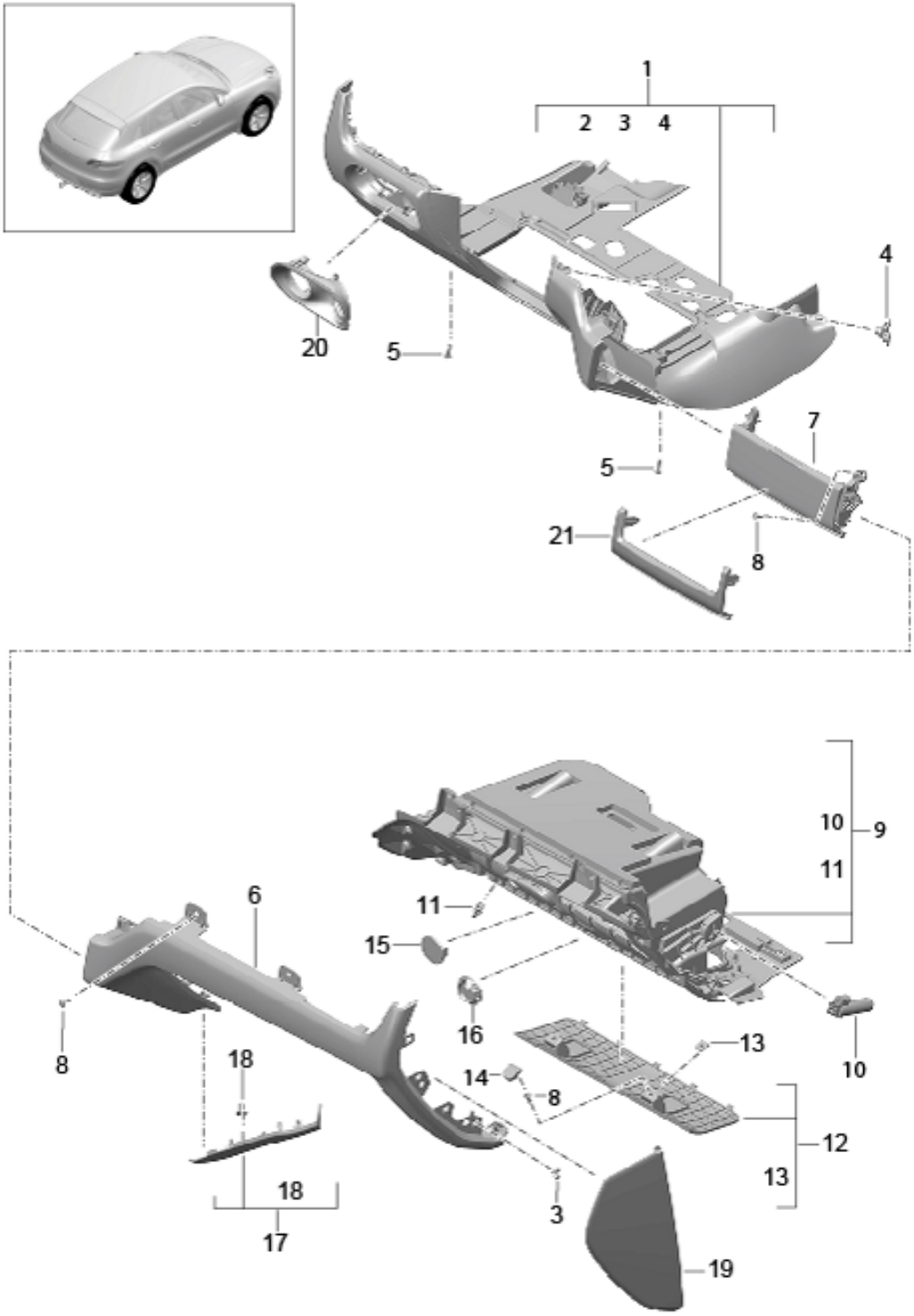

Model: 95B **Model life 2014>>**

Pos	Part Number	Description	Remark	Qty	Model
		Glove compartment			
		And			
		Lining			
		Driver's side			
1	95B 858 903	Dashboard trim	/LL -15	1	IL0L/4N1/4N2
					I4UD/4UE
		Lower part			
	95B 858 903 DK4	Black			+VC,+VJ,+VF,
					+VI,+VU
	95B 858 903 OS2	Agate Grey			+VD,+VG
	95B 858 903 DM5	Luxor Beige			+VE,+VH,+VX
1	95B 858 903 Q	Dashboard trim	/LL 16-	1	IL0L/4N0/4N1
					I4N2/4N9/4UD
					I4UE
		Lower part			
	95B 858 903 Q DK4	Black			+VC,+VF,+VI
					+VU,+FA
	95B 858 903 Q OS2	Agate Grey			+VD,+VG,+FB
	95B 858 903 Q DM5	Luxor Beige			+VE,+VX,+VH
(1)	95B 858 903 B	Dashboard trim	/LL -15	1	IL0L/4N3/4N8
					I4UD/4UE
		Lower part			
		Leather			
	95B 858 903 B A11	Black			+VK
	95B 858 903 B OA1	Agate Grey			+VL
	95B 858 903 B 7J0	Luxor Beige			+VM,+VP
	95B 858 903 B OK6	Saddle Tan			+VN
	95B 858 903 B OG3	Carrera Red			+VO
	95B 858 903 B OD4	Pebble Grey			+VQ
(1)	95B 858 903 S	Dashboard trim	/LL 16-	1	IL0L/4N3/4N8
					I4UD/4UE
		Lower part			
		Leather			
	95B 858 903 S A11	Black			+FL,+FE,+FF
					+FN,+FK,+TR
					+TS,+VK
	95B 858 903 S OA1	Agate Grey			+FM,+VL
	95B 858 903 S 7J0	Luxor Beige			+FH,+VM,+VP
	95B 858 903 S OK6	Saddle Tan			+FI,+VN
	95B 858 903 S OG3	Carrera Red			+VO
	95B 858 903 S OD4	Pebble Grey			+VQ
(1)	95B 858 903 D	Dashboard trim	/LL -15	1	IL0L/4N5/4UD
					I4UE
		Lower part			
		Natural leather			
	95B 858 903 D 6J0	Espresso			+VR
(1)	95B 858 903 AA	Dashboard trim	/LL 16-	1	IL0L/4N5/4UD
					I4UE
		Lower part			
		Natural leather			
	95B 858 903 AA 6J0	Espresso			+VR
(1)	95B 858 903 A	Dashboard trim	/RL -15	1	IL0R/4N1/4N2
					I4UD/4UE
		Lower part			
	95B 858 903 A DK4	Black			+VC,+VJ,+VF,
					+VI,+VU
	95B 858 903 A OS2	Agate Grey			+VD,+VG
	95B 858 903 A DM5	Luxor Beige			+VE,+VH,+VX
(1)	95B 858 903 R	Dashboard trim	/RL 16-	1	IL0R/4N1/4N2
					I4UD/4UE
		Lower part			
	95B 858 903 R DK4	Black			+VC,+VF,+VI
					+VU,+FA

Model: 95B **Model life 2014>>**

Pos	Part Number	Description	Remark	Qty	Model
	95B 858 903 R OS2	Agate Grey			+VD,+VG,+FB
	95B 858 903 R DM5	Luxor Beige			+VE,+VX,+VH
(1)	95B 858 903 C	Dashboard trim	/RL -15	1	IL0R/4N3/4N8
					I4UD/4UE
		Lower part			
		Leather			
	95B 858 903 C A11	Black			+VK
	95B 858 903 C OA1	Agate Grey			+VL
	95B 858 903 C 7J0	Luxor Beige			+VM,+VP
	95B 858 903 C OK6	Saddle Tan			+VN
	95B 858 903 C OG3	Carrera Red			+VO
	95B 858 903 C OD4	Pebble Grey			+VQ
(1)	95B 858 903 T	Dashboard trim	/RL 16-	1	IL0R/4N3/4N8
					I4UD/4UE
		Lower part			
		Leather			
	95B 858 903 T A11	Black			+FL,+FE,+FF
					+FN,+FK,+TR
					+TS,+VK
	95B 858 903 T OA1	Agate Grey			+FM,+VL
	95B 858 903 T 7J0	Luxor Beige			+FH,+VM,+VP
	95B 858 903 T OK6	Saddle Tan			+FI,+VN
	95B 858 903 T OG3	Carrera Red			+VO
	95B 858 903 T OD4	Pebble Grey			+VQ
(1)	95B 858 903 E	Dashboard trim	/RL -15	1	IL0R/4N5/4UD
					I4UE
		Lower part			
		Natural leather			
	95B 858 903 E 6J0	Espresso			+VR
(1)	95B 858 903 AB	Dashboard trim	/RL 16-	1	IL0R/4N5/4UD
					I4UE
		Lower part			
		Natural leather			
	95B 858 903 AB 6J0	Espresso			+VR
(1)	95B 858 903 AC	Dashboard trim	16-	1	INZ3/4N0/4N1
					I4N2/4N9/4UQ
		Lower part			
	95B 858 903 AC DK4	Black			+VC,+VF,+VI
					+VU,+FA
	95B 858 903 AC OS2	Agate Grey			+VD,+VG,+FB
	95B 858 903 AC DM5	Luxor Beige			+VE,+VX,+VH
(1)	95B 858 903 AD	Dashboard trim	16-	1	INZ3/4N3/4N8
					I4UQ
		Lower part			
		Leather			
	95B 858 903 AD A11	Black			+FL,+FE,+FF
					+FN,+FK,+TR
					+TS,+VK
	95B 858 903 AD OA1	Agate Grey			+FM,+VL
	95B 858 903 AD 7J0	Luxor Beige			+FH,+VM,+VP
	95B 858 903 AD OK6	Saddle Tan			+FI,+VN
	95B 858 903 AD OG3	Carrera Red			+VO
	95B 858 903 AD OD4	Pebble Grey			+VQ
(1)	95B 858 903 AE	Dashboard trim	16-	1	INZ3/4N5/4UQ
		Lower part			
		Natural leather			
	95B 858 903 AE 6J0	Espresso			+VR
(1)	95B 858 903 J	Dashboard trim	/LL -15	1	IL0L/4N1/4N2
					I4UD/4UE
		Lower part			
	95B 858 903 J DK4	Black			+VC,+VJ,+VF,
					+VI,+VU
	95B 858 903 J OS2	Agate Grey			+VD,+VG

Model: 95B **Model life 2014>>**

Pos	Part Number	Description	Remark	Qty	Model
	95B 858 903 J DM5	Luxor Beige			+VE,+VH
(1)	95B 858 903 AF	Dashboard trim	/LL 16-	1	IL0L/4N0/4N1
					I4N2/4N9/4UD
					I4UE
		Lower part			
	95B 858 903 AF DK4	Black			+VC,+VF,+VI
					+VU,+FA
	95B 858 903 AF OS2	Agate Grey			+VD,+VG,+FB
	95B 858 903 AF DM5	Luxor Beige			+VE,+VX,+VH
(1)	95B 858 903 K	Dashboard trim	/RL -15	1	IL0R/4N1/4N2
					I4UD/4UE
		Lower part			
	95B 858 903 K DK4	Black			+VC,+VJ,+VF,
					+VI,+VU
	95B 858 903 K OS2	Agate Grey			+VD,+VG
	95B 858 903 K DM5	Luxor Beige			+VE, +VH
(1)	95B 858 903 AG	Dashboard trim	/RL 16-	1	IL0R/4N0/4N1
					I4N2/4N9/4UD
					I4UE
		Lower part			
	95B 858 903 AG DK4	Black			+VC,+VF,+VI
					+VU,+FA
	95B 858 903 AG OS2	Agate Grey			+VD,+VG,+FB
	95B 858 903 AG DM5	Luxor Beige			+VE,+VX,+VH
(1)	95B 858 903 L	Dashboard trim	/LL -15	1	IL0L/4N3/4N8
					I4UD/4UE
		Lower part			
		Leather			
	95B 858 903 L A11	Black			+VK
	95B 858 903 L OA1	Agate Grey			+VL
	95B 858 903 L 7J0	Luxor Beige			+VM,+VP
	95B 858 903 L OK6	Saddle Tan			+VN
	95B 858 903 L OG3	Carrera Red			+VO
	95B 858 903 L OD4	Pebble Grey			+VQ
(1)	95B 858 903 AH	Dashboard trim	/LL 16-	1	IL0L/4N3/4N8
					I4UD/4UE
		Lower part			
		Leather			
	95B 858 903 AH A11	Black			+FL,+FE,+FF
					+FN,+FK,+TR
					+TS,+VK
	95B 858 903 AH OA1	Agate Grey			+FM,+VL
	95B 858 903 AH 7J0	Luxor Beige			+FH,+VM,+VP
	95B 858 903 AH OK6	Saddle Tan			+FI,+VN
	95B 858 903 AH OG3	Carrera Red			+VO
	95B 858 903 AH OD4	Pebble Grey			+VQ
(1)	95B 858 903 M	Dashboard trim	/RL -15	1	IL0R/4N3/4N8
					I4UD/4UE
		Lower part			
		Leather			
	95B 858 903 M A11	Black			+VK
	95B 858 903 M OA1	Agate Grey			+VL
	95B 858 903 M 7J0	Luxor Beige			+VM,+VP
	95B 858 903 M OK6	Saddle Tan			+VN
	95B 858 903 M OG3	Carrera Red			+VO
	95B 858 903 M OD4	Pebble Grey			+VQ
(1)	95B 858 903 AJ	Dashboard trim	/RL 16-	1	IL0R/4N3/4N8
					I4UD/4UE
		Lower part			
		Leather			
	95B 858 903 AJ A11	Black			+FL,+FE,+FF
					+FN,+FK,+TR
					+TS,+VK

Model: 95B **Model life 2014>>**

Pos	Part Number	Description	Remark	Qty	Model
	95B 858 903 AJ OA1	Agate Grey			+FM,+VL
	95B 858 903 AJ 7J0	Luxor Beige			+FH,+VM,+VP
	95B 858 903 AJ OK6	Saddle Tan			+FI,+VN
	95B 858 903 AJ OG3	Carrera Red			+VO
	95B 858 903 AJ OD4	Pebble Grey			+VQ
(1)	95B 858 903 N	Dashboard trim	/LL -15	1	IL0L/4N5/4UD
					I4UE
		Lower part			
		Natural leather			
	95B 858 903 N 6J0	Espresso			+VR
(1)	95B 858 903 AK	Dashboard trim	/LL 16-	1	IL0L/4N5/4UD
					I4UE
		Lower part			
		Natural leather			
	95B 858 903 AK 6J0	Espresso			+VR
(1)	95B 858 903 P	Dashboard trim	/RL -15	1	IL0R/4N5/4UD
					I4UE
		Lower part			
		Natural leather			
	95B 858 903 P 6J0	Espresso			+VR
(1)	95B 858 903 AL	Dashboard trim	/RL 16-	1	IL0R/4N5/4UD
					I4UE
		Lower part			
		Natural leather			
	95B 858 903 AL 6J0	Espresso			+VR
2	8T0 853 107	Clamp		X	
3	999 507 533 02	Clamp		X	
5	N 106 847 01	Oval-head screw		4	
		M5X20			
6	95B 858 122 F	Cover	/LL	1	IL0L/4N1/4N2
		Passenger's side			
	95B 858 122 F DK4	Black			+VC,+VJ,+VF,
					+VI,+VU
	95B 858 122 F OS2	Agate Grey			+VD,+VG
	95B 858 122 F DM5	Luxor Beige			+VE,+VH,+VX
					+VZ
(6)	95B 858 122 H	Cover	/LL	1	IL0L/4N3/4N8
		Passenger's side			
		Leather			
	95B 858 122 H A11	Black			+VK
	95B 858 122 H OA1	Agate Grey			+VL
	95B 858 122 H 7J0	Luxor Beige			+VM,+VP
	95B 858 122 H OK6	Saddle Tan			+VN
	95B 858 122 H N12	Carrera Red			+VO
	95B 858 122 H OD4	Pebble Grey			+VQ
(6)	95B 858 122 K	Cover	/LL	1	IL0L/4N5
		Passenger's side			
		Natural leather			
	95B 858 122 K 6J0	Espresso			+VR
6	95B 858 122 G	Cover	/RL	1	IL0R/4N1/4N2
		Passenger's side			
	95B 858 122 G DK4	Black			+VC,+VJ,+VF,
					+VI,+VU
	95B 858 122 G OS2	Agate Grey			+VD,+VG
	95B 858 122 G DM5	Luxor Beige			+VE,+VH,+VX
					+VZ
(6)	95B 858 122 J	Cover	/RL	1	IL0R/4N3/4N8
		Passenger's side			
		Leather			
	95B 858 122 J A11	Black			+VK
	95B 858 122 J OA1	Agate Grey			+VL
	95B 858 122 J 7J0	Luxor Beige			+VM,+VP
	95B 858 122 J OK6	Saddle Tan			+VN

Model: 95B **Model life 2014>>**

Pos	Part Number	Description	Remark	Qty	Model
	95B 858 122 J N12	Carrera Red			+VO
	95B 858 122 J OD4	Pebble Grey			+VQ
(6)	95B 858 122 L	Cover Passenger's side Natural leather	/RL	1	IL0R/4N5
	95B 858 122 L 6J0	Espresso			+VR
7	95B 858 100 M	Trim for switch	-15	1	I4N1/4N2
	95B 858 100 M 1D0	Black			+VC,+VJ,+VF, +VI,+VU
	95B 858 100 M OW7	Agate Grey			+VD,+VG
	95B 858 100 M 2E0	Luxor Beige			+VE,+VH
(7)	95B 858 100 Q	Trim for switch	16	1	I4N0/4N9
	95B 858 100 Q 1D0	Black			+VC,+VJ,+VF, +VI,+VU
	95B 858 100 Q OW7	Agate Grey			+VD,+VG
	95B 858 100 Q 2E0	Luxor Beige			+VE,+VH,+VX +VZ
(7)	95B 858 100 Q	Trim for switch	16	1	I4N1/4N2
	95B 858 100 Q 1D0	Black			+VC,+VJ,+VF, +VI,+VU
	95B 858 100 Q OW7	Agate Grey			+VD,+VG
	95B 858 100 Q 2E0	Luxor Beige			+VE,+VH,+VX +VZ
(7)	95B 858 100 T	Trim for switch	17-	1	I4N0/4N1/4N2 I4N9
	95B 858 100 T 1D0	Black			+VC,+VJ,+VF, +VI,+VU,+FA
	95B 858 100 T OW7	Agate Grey			+VD,+VG,+FB
	95B 858 100 T 2E0	Luxor Beige			+VE,+VH,+VX +VZ,+FC
(7)	95B 858 100 N	Trim for switch Leather	-16	1	I4N3/4N8
	95B 858 100 N A11	Black			+VK
	95B 858 100 N OA1	Agate Grey			+VL
	95B 858 100 N 7J0	Luxor Beige			+VM,+VP
	95B 858 100 N OK6	Saddle Tan			+VN
	95B 858 100 N OG3	Carrera Red			+VO
	95B 858 100 N OD4	Pebble Grey			+VQ
(7)	95B 858 100 AA	Trim for switch Leather	17-	1	I4N3/4N8
	95B 858 100 AA A11	Black			+FL,+FE,+FF +FN,+FK,+TR +TS,+VK
	95B 858 100 AA OA1	Agate Grey			+FM,+VL
	95B 858 100 AA 7J0	Luxor Beige			+VM,+VP
	95B 858 100 AA OK6	Saddle Tan			+FI,+VN
	95B 858 100 AA OG3	Carrera Red			+VO
	95B 858 100 AA OD4	Pebble Grey			+VQ
(7)	95B 858 100 S	Trim for switch Natural leather	-16	1	I4N5
	95B 858 100 S 6J0	Espresso			+VR
(7)	95B 858 100 AB	Trim for switch Natural leather	17-	1	I4N5
	95B 858 100 AB 6J0	Espresso			+VR
8	N 910 742 01	Fastening screw M5X16		X	
9	95B 857 095 F	Glove compartment	/LL	1	IL0L/4N1/4N2
	95B 857 095 F DK4	Black			+VC,+VJ,+VF, +VI,+VU
	95B 857 095 F OS2	Agate Grey			+VD,+VG
	95B 857 095 F DM5	Luxor Beige			+VE,+VH,+VX +VZ
(9)	95B 857 095 K	Glove compartment	/LL	1	IL0L/4N5

Model: 95B **Model life 2014>>**

Pos	Part Number	Description	Remark	Qty	Model
		Natural leather			
	95B 857 095 K 6J0	Espresso			+VR
(9)	95B 857 095 H	Glove compartment	/LL	1	IL0L/4N3/4N8
		Leather			
	95B 857 095 H A11	Black			+VK
	95B 857 095 H OA1	Agate Grey			+VL
	95B 857 095 H 7J0	Luxor Beige			+VM,+VP
	95B 857 095 H OK6	Saddle Tan			+VN
	95B 857 095 H OG3	Carrera Red			+VO
	95B 857 095 H OD4	Pebble Grey			+VQ
(9)	95B 857 095 G	Glove compartment	/RL	1	IL0R/4N1/4N2
	95B 857 095 G DK4	Black			+VC,+VJ,+VF,
					+VI,+VU
	95B 857 095 G OS2	Agate Grey			+VD,+VG
	95B 857 095 G DM5	Luxor Beige			+VE,+VH,+VX
					+VZ
(9)	95B 857 095 L	Glove compartment	/RL	1	IL0R/4N5
		Natural leather			
	95B 857 095 L 6J0	Espresso			+VR
(9)	95B 857 095 J	Glove compartment	/RL	1	IL0R/4N3/4N8
		Leather			
	95B 857 095 J A11	Black			+VK
	95B 857 095 J OA1	Agate Grey			+VL
	95B 857 095 J 7J0	Luxor Beige			+VM,+VP
	95B 857 095 J OK6	Saddle Tan			+VN
	95B 857 095 J OG3	Carrera Red			+VO
	95B 857 095 J OD4	Pebble Grey			+VQ
10	95B 880 324	Damper	/LL	1	IL0L
(10)	95B 880 324 A	Damper	/RL	1	IL0R
11	958 552 223 00	Support		2	
		Pin			
12	95B 858 325	Lid		1	IL0L/4UD/4UE
	95B 858 325 1E0	Black			
13	999 507 556 01	Speed nut		2	
		M5			
14	95B 857 161	Cover		4	IL0L
15	4L0 858 193	Cover		1	I9AD
	4L0 858 193 4PK	Soul			
16	3B0 816 355	Valve		1	I9AQ
	3B0 816 355 9B9	Satin black			
17	95B 858 927	Lining	/LL	1	IL0L
		Passenger's side			
		Lower			
	95B 858 927 1E0	Black			+VC,+VJ,+VF,
					+VI,+VU,+VK,
	95B 858 927 OP1	Agate Grey			+VD,+VG,+VL
	95B 858 927 4H0	Luxor Beige			+VE,+VH,+VM,
					+VP,+VX,+VZ
	95B 858 927 OM8	Saddle Tan			+VN
	95B 858 927 OW5	Carrera Red			+VO
	95B 858 927 OV4	Pebble Grey			+VQ
(17)	95B 858 927 A	Lining	/RL	1	IL0R
		Passenger's side			
		Lower			
	95B 858 927 A 1E0	Black			+VC,+VJ,+VF,
					+VI,+VU,+VK,
	95B 858 927 A OP1	Agate Grey			+VD,+VG,+VL
	95B 858 927 A 4H0	Luxor Beige			+VE,+VH,+VM,
					+VP,+VX,+VZ
	95B 858 927 A OM8	Saddle Tan			+VN
	95B 858 927 A OW5	Carrera Red			+VO
	95B 858 927 A OV4	Pebble Grey			+VQ
(17)	95B 858 927 B	Lining	/RL	1	IL0R

Model: 95B **Model life 2014>>**

Pos	Part Number	Description	Remark	Qty	Model
		Passenger's side			
		Lower			
	95B 858 927 B 1E0	Black			+VC,+VJ,+VF,
					+VI,+VU,+VK,
	95B 858 927 B OP1	Agate Grey			+VD,+VG,+VL
	95B 858 927 B 4H0	Luxor Beige			+VE,+VH,+VM,
					+VP,+VX,+VZ
	95B 858 927 B OM8	Saddle Tan			+VN
	95B 858 927 B OW5	Carrera Red			+VO
	95B 858 927 B OV4	Pebble Grey			+VQ
18	999 702 559 40	Grommet		2	
19	95B 857 175 A	Cover	/L	1	
		Left			
	95B 857 175 A 5Q0	Black			+VC,+VJ,+VF,
					+VI,+VU,+VK
	95B 857 175 A OP1	Agate Grey			+VD,+VG,+VL
	95B 857 175 A 4H0	Luxor Beige			+VE,+VH,+VM
					+VP,+VX,+VZ
	95B 857 175 A OM8	Saddle Tan			+VN
	95B 857 175 A OE1	Carrera Red			+VO
	95B 857 175 A OV4	Pebble Grey			+VQ
	95B 857 175 A 7N0	Espresso			+VR
(19)	95B 857 176 A	Cover	/R	1	
		Left			
	95B 857 176 A 5Q0	Black			+VC,+VJ,+VF,
					+VI,+VU,+VK
	95B 857 176 A OP1	Agate Grey			+VD,+VG,+VL
	95B 857 176 A 4H0	Luxor Beige			+VE,+VH,+VM
					+VP,+VX,+VZ
	95B 857 176 A OM8	Saddle Tan			+VN
	95B 857 176 A OE1	Carrera Red			+VO
	95B 857 176 A OV4	Pebble Grey			+VQ
	95B 857 176 A 7N0	Espresso			+VR
20	95B 857 290	Mounting		1	IL0L
		Cover			
	95B 857 290 1E0	Black			
(20)	95B 857 290 A	Mounting		1	IL0R
		Cover			
	95B 857 290 A 1E0	Black			
21	95B 858 100 C	Trim for switch		1	I7Q4
		Plastic material			
	95B 858 100 C GT8	Galvano silver			

Illustration: 809-15

PORSCHE

Model: 95B **Model life 2014>>**

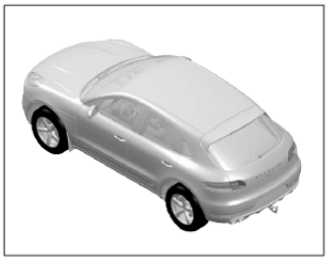

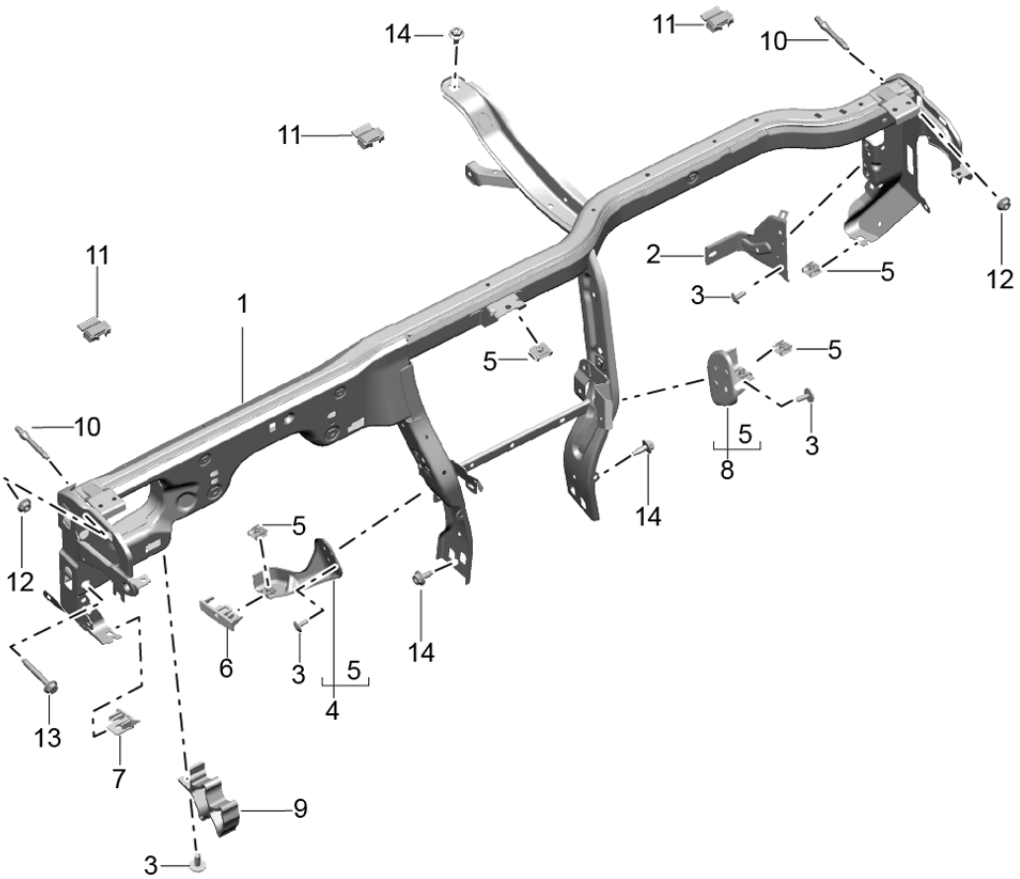

Model: 95B **Model life 2014>>**

Pos	Part Number	Description	Remark	Qty	Model
		Retaining frame Dashboard			
1	95B 857 011	Retaining frame	/LL	1	IL0L
(1)	95B 857 011 A	Retaining frame	/RL	1	IL0R
2	8K1 819 079	Retaining bar for Air conditioner	/LL	1	IL0L
(2)	8K2 819 079	Retaining bar for Air conditioner	/RL	1	IL0R
3	N 910 423 02	Lens-head screw M6X16		X	
4	8K1 863 159 B	Fastening angle		1	IL0L/4UD/4UE
5	N 910 018 01	Speed nut M5		1	
6	95B 858 361 A	Adapter		X	
7	95B 858 361	Adapter Left		X	
8	8K2 863 160 A	Fastening angle Inner Right	/RL	1	IL0R
10	WHT 002 413	Stud		2	
11	4D0 857 949 A	Grommet		3	
12	N 907 988 05	Collar nut M8		2	
13	N 106 044 02	Hexagon-head bolt M8X65		1	
14	N 910 333 01	Hexagon-head bolt M8X22		5	

Illustration: 809-20

PORSCHE

Model: 95B **Model life 2014>>**

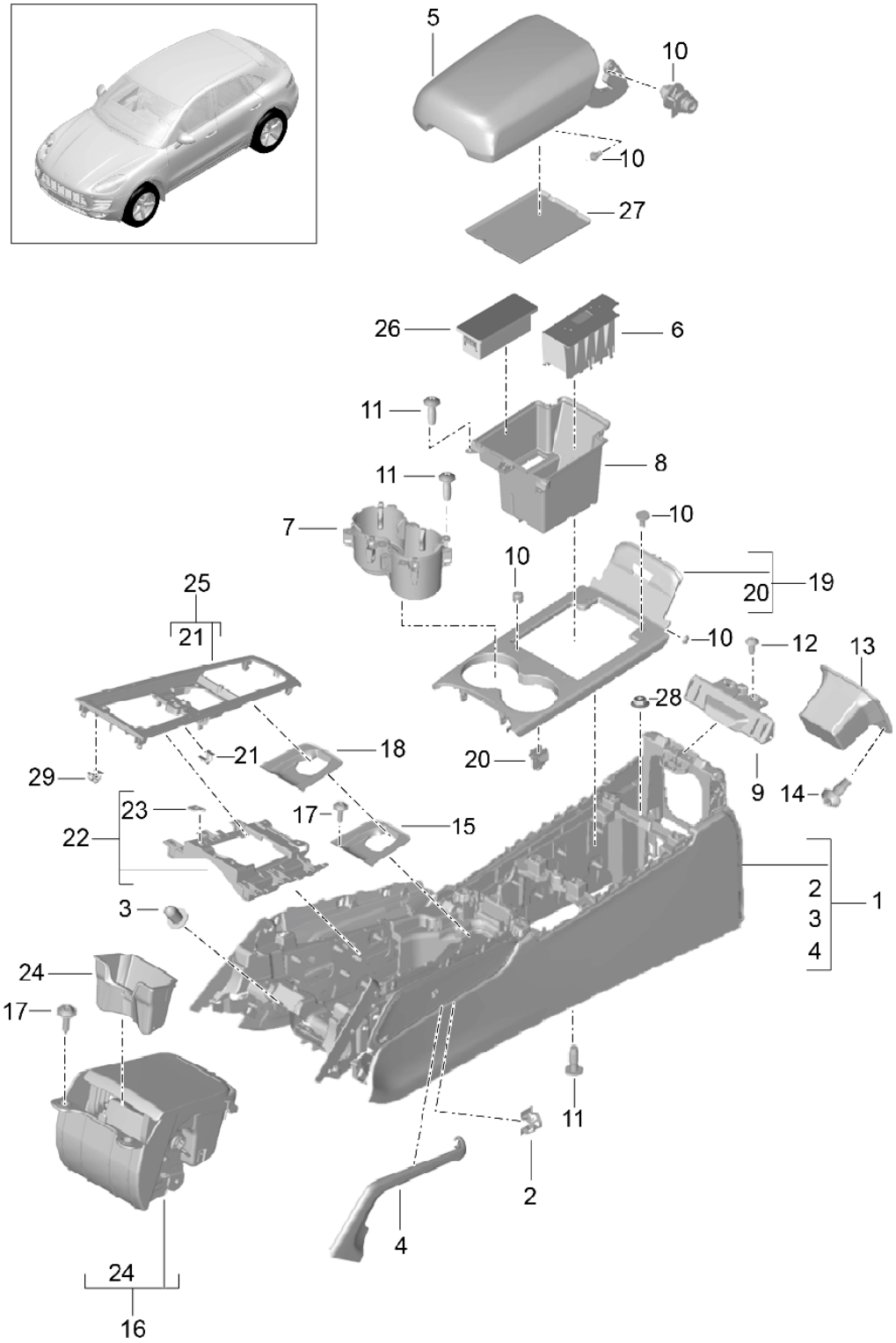

Model: 95B **Model life 2014>>**

Pos	Part Number	Description	Remark	Qty	Model
		Centre console			
1	95B 863 241	Centre console		1	
	95B 863 241 5Q0	Black			+VC,+VJ,+VF, +VI,+VU,+VK
	95B 863 241 OA6	Agate Grey			+VD,+VG,+VL
	95B 863 241 6W0	Luxor Beige			+VE,+VH,+VM, +VP,+VX,+VZ
	95B 863 241 OL7	Saddle Tan			+VN
	95B 863 241 OE1	Carrera Red			+VO
	95B 863 241 OD9	Pebble Grey			+VQ
	95B 863 241 3T0	Espresso			+VR
2	999 507 533 03	Clamp		X	
3	999 703 551 40	Grommet		1	
4	95B 864 365	Cover	/L	1	I3D1/3D2/3D9 I3I0
	95B 864 365 1D0	Black			+VC+VF+VI+VU
	95B 864 365 OW7	Agate Grey			+VD+VG
	95B 864 365 2E0	Luxor Beige			+VE+VH+VX+VZ
(4)	95B 864 365 A	Cover	/L	1	I3D6/3D8
	95B 864 365 A A11	Black			+VK
	95B 864 365 A 7J0	Luxor Beige			+VM+VP
	95B 864 365 A OA1	Agate Grey			+VL
	95B 864 365 A OK6	Saddle Tan			+VN
	95B 864 365 A OG3	Carrera Red			+VO
	95B 864 365 A OD4	Pebble Grey			+VQ
(4)	95B 864 365 B	Cover	/L	1	I3D4
	95B 864 365 B 6J0	Espresso			+VR
(4)	95B 864 366	Cover	/R	1	I3D1/3D2/3D9 I3I0
	95B 864 366 1D0	Black			+VC+VF+VI+VU
	95B 864 366 OW7	Agate Grey			+VD+VG
	95B 864 366 2E0	Luxor Beige			+VE+VH+VX+VZ
(4)	95B 864 366 A	Cover	/R	1	I3D6/3D8
	95B 864 366 A A11	Black			+VK
	95B 864 366 A 7J0	Luxor Beige			+VM+VP
	95B 864 366 A OA1	Agate Grey			+VL
	95B 864 366 A OK6	Saddle Tan			+VN
	95B 864 366 A OG3	Carrera Red			+VO
	95B 864 366 A OD4	Pebble Grey			+VQ
(4)	95B 864 366 B	Cover	/R	1	I3D4
	95B 864 366 B 6J0	Espresso			+VR
5	95B 864 207 A	Armrest		1	I3D2/3D6/3D8 I3I0/6F0
	95B 864 207 A A11	Black			+VF,+VK
	95B 864 207 A OA1	Agate Grey			+VG,+VL
	95B 864 207 A 7J0	Luxor Beige			+VH,+VM,+VP +VZ
	95B 864 207 A OK6	Saddle Tan			+VJ,+VN
	95B 864 207 A OG3	Carrera Red			+VI,+VU,+VO
	95B 864 207 A OD4	Pebble Grey			+VQ
	95B 864 207 A HHX	Black/Carmine Red			+FN
	95B 864 207 A HAG	Black/Rhodium Silver			+FK
(5)	95B 864 207	Armrest		1	I3D1/3D9/6F0
	95B 864 207 1D0	Black			+VC
	95B 864 207 OW7	Agate Grey			+VD
	95B 864 207 2E0	Luxor Beige			+VE,+VX
(5)	95B 864 207 B	Armrest		1	I3D4/6F0
	95B 864 207 B 6J0	Espresso			+VR
(5)	95B 864 207 C	Armrest		1	I3D2/3D6/3D8 I3I0/6F6
		with Crest			
	95B 864 207 C A11	Black			+VF,+FA,+FF

Model: 95B **Model life 2014>>**

Pos	Part Number	Description	Remark	Qty	Model
					+VK
	95B 864 207 C OA1	Agate Grey			+VG,+FB,+VL
					+FM
	95B 864 207 C 7J0	Luxor Beige			+VH,+VZ,+FC
					+FH,+FM,+VP
	95B 864 207 C OG3	Carrera Red			+VI,+VU,+VO
	95B 864 207 C HHX	Black/Carmine Red			+FL,+FN
	95B 864 207 C HAG	Black/Rhodium Silver			+FE,+FK
	95B 864 207 C OK6	Saddle Tan			+FI,+VN
	95B 864 207 C OD4	Pebble Grey			+VQ
(5)	95B 864 207 D	Armrest		1	+VR
					I3D4/6F6
		with			
		Crest			
	95B 864 207 D 6J0	Espresso			
(5)	95B 864 207 E	Armrest	/LL	1	IL0L/3D2/6F8
		with			
		Logo			
		Macan			
	95B 864 207 E A11	Black			+VF,+VK
	95B 864 207 E OA1	Agate Grey			+VG,+VL
	95B 864 207 E 7J0	Luxor Beige			+VH,+VZ,+VM
					+VP
	95B 864 207 E OG3	Carrera Red			+VI,+VO,+VU
	95B 864 207 E OK6	Saddle Tan			+FN
	95B 864 207 E OD4	Pebble Grey			+VQ
(5)	95B 864 207 F	Armrest	/RL	1	IL0R/3D2/6F8
		with			
		Logo			
		Macan			
	95B 864 207 F A11	Black			+VF,+VK
	95B 864 207 F OA1	Agate Grey			+VG,+VL
	95B 864 207 F 7J0	Luxor Beige			+VH,+VZ,+VM
					+VP
	95B 864 207 F OG3	Carrera Red			+VI,+VO,+VU
	95B 864 207 F OK6	Saddle Tan			+FN
	95B 864 207 F OD4	Pebble Grey			+VQ
(5)	95B 864 207 G	Armrest	/LL	1	IL0L/3D4/6F8
		with			
		Logo			
		Macan			
	95B 864 207 G 6J0	Espresso			+VR
(5)	95B 864 207 H	Armrest	/RL	1	IL0R/3D4/6F8
		with			
		Logo			
		Macan			
	95B 864 207 H 6J0	Espresso			+VR
(5)	95B 864 207 J	Armrest	/LL	1	IL0L/3D2/3D6
					I3D8/3I0/6F8
		with			
		Logo			
		Macan			
		S			
	95B 864 207 J A11	Black			+VF,+VK
	95B 864 207 J OA1	Agate Grey			+VG,+VL
	95B 864 207 J 7J0	Luxor Beige			+VH,+VZ,+VM
					+VP
	95B 864 207 J OG3	Carrera Red			+VI,+VU,+VO
	95B 864 207 J OK6	Saddle Tan			+VN
	95B 864 207 J OD4	Pebble Grey			+VQ
(5)	95B 864 207 K	Armrest	/RL	1	IL0R/3D2/3D6
					I3D8/3I0/6F8
		with			

Model: 95B **Model life 2014>>**

Pos	Part Number	Description	Remark	Qty	Model
		Logo			
		Macan			
		S			
	95B 864 207 K A11	Black			+VF,+VK
	95B 864 207 K OA1	Agate Grey			+VG,+VL
	95B 864 207 K 7J0	Luxor Beige			+VH,+VZ,+VM
					+VP
	95B 864 207 K OG3	Carrera Red			+VI,+VU,+VO
	95B 864 207 K OK6	Saddle Tan			+VN
	95B 864 207 K OD4	Pebble Grey			+VQ
(5)	95B 864 207 L	Armrest	/LL	1	IL0L/3D4/6F8
		with			
		Logo			
		Macan			
		S			
	95B 864 207 L 6J0	Espresso			+VR
(5)	95B 864 207 M	Armrest	/RL	1	IL0R/3D4/6F8
		with			
		Logo			
		Macan			
		S			
	95B 864 207 M 6J0	Espresso			+VR
(5)	95B 864 207 N	Armrest	/LL	1	IL0L/3D2/3D6
					I3D8/3I0/6F8
		with			
		Logo			
		Macan			
		Turbo			
	95B 864 207 N A11	Black			+VF,+VK
	95B 864 207 N OA1	Agate Grey			+VG,+VL
	95B 864 207 N 7J0	Luxor Beige			+VH,+VZ,+VM
					+VP
	95B 864 207 N OG3	Carrera Red			+VI,+VU,+VO
	95B 864 207 N OK6	Saddle Tan			+VN
	95B 864 207 N OD4	Pebble Grey			+VQ
(5)	95B 864 207 P	Armrest	/RL	1	IL0R/3D2/3D6
					I3D8/3I0/6F8
		with			
		Logo			
		Macan			
		Turbo			
	95B 864 207 P A11	Black			+VF,+VK
	95B 864 207 P OA1	Agate Grey			+VG,+VL
	95B 864 207 P 7J0	Luxor Beige			+VH,+VZ,+VM
					+VP
	95B 864 207 P OG3	Carrera Red			+VI,+VU,+VO
	95B 864 207 P OK6	Saddle Tan			+VN
	95B 864 207 P OD4	Pebble Grey			+VQ
(5)	95B 864 207 Q	Armrest	/LL	1	IL0L/3D4/6F8
		with			
		Logo			
		Macan			
		Turbo			
	95B 864 207 Q 6J0	Espresso			+VR
(5)	95B 864 207 R	Armrest	/RL	1	IL0R/3D4/6F8
		with			
		Logo			
		Macan			
		Turbo			
	95B 864 207 R 6J0	Espresso			+VR
(5)	95B 864 207 S	Armrest		1	I3D3/3D5/6F0
		Alcantara			
	95B 864 207 S DSJ	Black			+FA,+FF

Model: 95B **Model life 2014>>**

Pos	Part Number	Description	Remark	Qty	Model
	95B 864 207 S DJQ	Agate Grey			+FB,+FM
	95B 864 207 S HP0	Luxor Beige			+FC,+FH
	95B 864 207 S HR0	Black/Carmine Red			+FL
	95B 864 207 S DJS	Black/Rhodium Silver			+FE,+TS
	95B 864 207 S HQ0	Saddle Tan			+FI
	95B 864 207 S HXO	Black/Carrera Red			+TR
(5)	95B 864 207 T	Armrest	/LL	1	IL0L/3D2/3D3
					I3D5/3D6/3D8
					I3I0/6F8
		with			
		Logo			
		Macan			
		GTS			
	95B 864 207 T A11	Black			+VF,+FA,+FF
					+VK
	95B 864 207 T OA1	Agate Grey			+VG,+FB,+FM
					+VL
	95B 864 207 T 7J0	Luxor Beige			+VH,+VZ,+FC
					+FH,+VM,+VP
	95B 864 207 T OG3	Carrera Red			+VI,+VO
	95B 864 207 T HHX	Black/Carmine Red			+FL,+FN
	95B 864 207 T HAG	Black/Rhodium Silver			+FE,+FK
	95B 864 207 T OK6	Saddle Tan			+FI,+VN
	95B 864 207 T OD4	Pebble Grey			+VQ
(5)	95B 864 207 AA	Armrest	/RL	1	IL0R/3D2/3D3
					I3D5/3D6/3D8
					I3I0/6F8
		with			
		Logo			
		Macan			
		GTS			
	95B 864 207 AA A11	Black			+VF,+FA,+FF
					+VK
	95B 864 207 AA OA1	Agate Grey			+VG,+FB,+FM
					+VL
	95B 864 207 AA 7J0	Luxor Beige			+VH,+VZ,+FC
					+FH,+VM,+VP
	95B 864 207 AA OG3	Carrera Red			+VI,+VO
	95B 864 207 AA HHX	Black/Carmine Red			+FL,+FN
	95B 864 207 AA HAG	Black/Rhodium Silver			+FE,+FK
	95B 864 207 AA OK6	Saddle Tan			+FI,+VN
	95B 864 207 AA OD4	Pebble Grey			+VQ
(5)	95B 864 207 AB	Armrest	/LL	1	IL0L/3D4/6F8
		with			
		Logo			
		Macan			
		GTS			
	95B 864 207 AB 6J0	Espresso			+VR
(5)	95B 864 207 AC	Armrest	/RL	1	IL0R/3D4/6F8
		with			
		Logo			
		Macan			
		GTS			
	95B 864 207 AC 6J0	Espresso			+VR
6	95B 863 351	Mounting		1	I9ZP
		Telephone			
7	8R0 862 533 B	Support		1	
		Beverages			
		Centre console			
	8R0 862 533 B 5Q0	Black			
8	95B 857 232	Package box		1	
9	95B 863 083	Cover		1	
		Lock carrier			

Model: 95B **Model life 2014>>**

Pos	Part Number	Description	Remark	Qty	Model
	95B 863 083 1E0	Black			
10	95B 860 255	Assembly kit Hinge Including Rubber buffer		1	
11	N 908 249 02	Oval-head screw 5,0X14		10	
12	N 106 695 01	Oval-head screw		2	
13		Shelf See illustrations 8/09/25		1	
14	N 106 021 01	Oval-head screw M6X16		4	
15	95B 864 132	Shelf		1	I9JA
	95B 864 132 6N3	Black mat			
16	95B 857 273	Mounting		1	I9JB
	95B 857 273 CZ0	Galvano silver			
17	N 906 986 06	Tapping screw 4,2X16		2	
18	95B 863 169	Insert Mat		1	I9JA
19	95B 863 097	Cover Upper		1	
	95B 863 097 5Q0	Black			+VC,+VJ,+VF, +VI,+VU,+VK
	95B 863 097 OA6	Agate Grey			+VD,+VG,+VL
	95B 863 097 6W0	Luxor Beige			+VE,+VH,+VM, +VP,+VX,+VZ
	95B 863 097 OL7	Saddle Tan			+VN
	95B 863 097 OE1	Carrera Red			+VO
	95B 863 097 OD9	Pebble Grey			+VQ
	95B 863 097 3T0	Espresso			+VR
20	999 507 130 01	U-clamp		6	
21	999 507 533 03	Clamp		3	
22	95B 863 531	Fastening angle Centre console Front		1	
23	999 507 556 01	Speed nut		4	
24	95B 857 311	Insert Ashtray		1	I9JB
25	95B 863 419	Cover Tiptronic		1	IG1D
26	95B 863 797	Mounting		1	IUF0
	95B 863 797 1E0	Black			
(26)	7PP 035 724 D	Plug socket		1	IUF1/8DQ/8DV I8YZ
27	95B 863 301	Insert Package box		1	I9W0/9W1/9W5
(27)	95B 863 301 A	Insert Telephone		1	I9ZP
28	N 907 988 05	Collar nut M8		2	
29	999 507 533 03	Clamp		3	IG1D

Illustration: 809-25

PORSCHE

Model: 95B **Model life 2014>>**

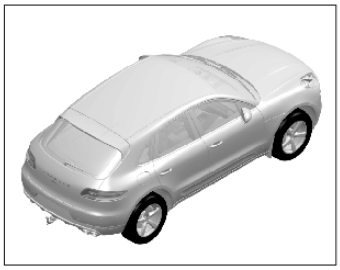

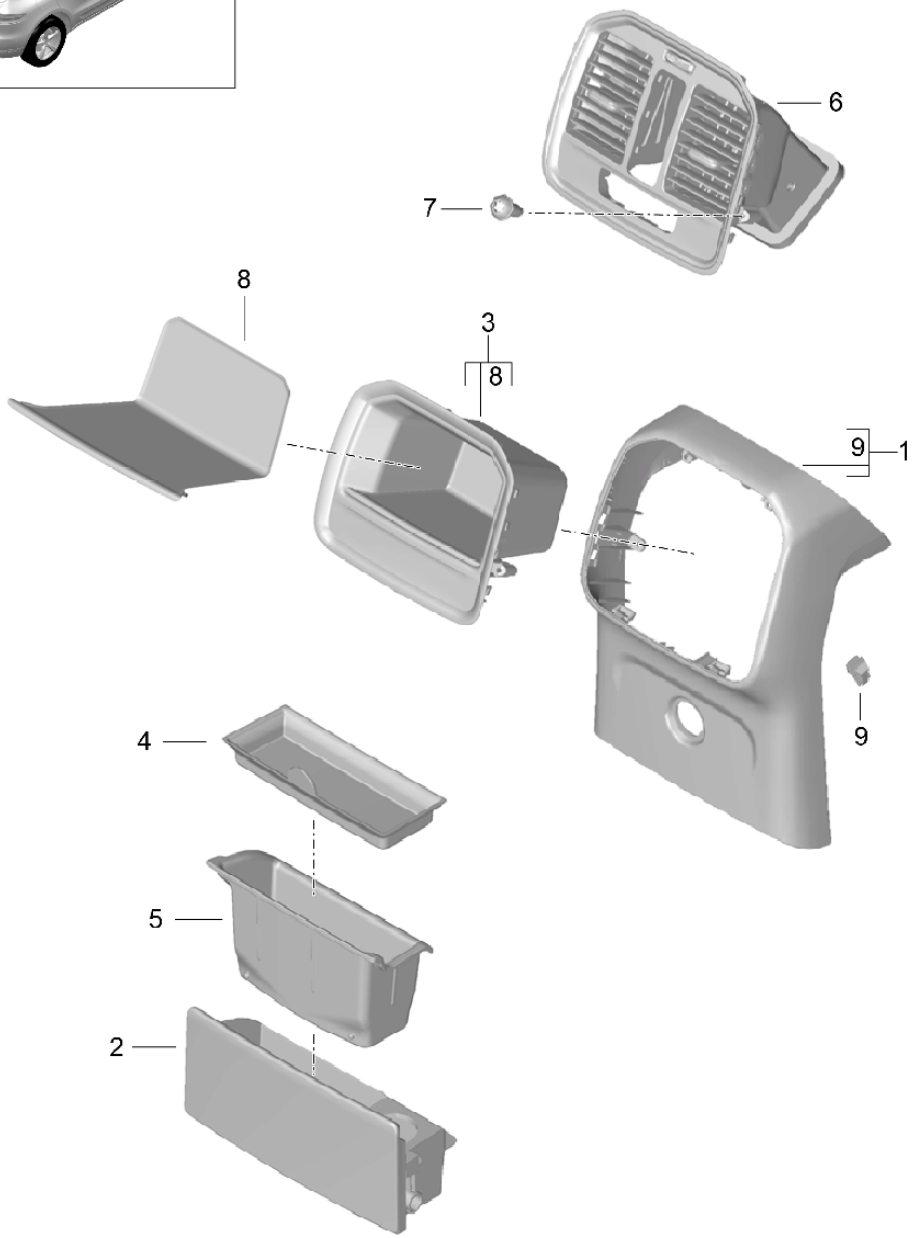

Model: 95B **Model life 2014>>**

Pos	Part Number	Description	Remark	Qty	Model
		Centre console			
		Accessories			
		Rear			
1	95B 864 378 A	Cover		1	I9JA
	95B 864 378 A 5Q0	Black			+VC,+VJ,+VF,
					+VI,+VU,+VK
	95B 864 378 A OA6	Agate Grey			+VD,+VG,+VL
	95B 864 378 A 6W0	Luxor Beige			+VE,+VH+VX,
					+VZ,+VM,+VP
	95B 864 378 A OL7	Saddle Tan			+VN
	95B 864 378 A OE1	Carrera Red			+VO
	95B 864 378 A OD9	Pebble Grey			+VQ
	95B 864 378 A 3T0	Espresso			+VR
(1)	95B 864 378 C	Cover		1	I9JB
	95B 864 378 C 5Q0	Black			+VC,+VJ,+VF,
					+VI,+VU,+VK
	95B 864 378 C OA6	Agate Grey			+VD,+VG,+VL
	95B 864 378 C 6W0	Luxor Beige			+VE,+VH+VX,
					+VZ,+VM,+VP
	95B 864 378 C OL7	Saddle Tan			+VN
	95B 864 378 C OE1	Carrera Red			+VO
	95B 864 378 C OD9	Pebble Grey			+VQ
	95B 864 378 C 3T0	Espresso			+VR
2	95B 857 274 A	Cover		1	I9JB
	95B 857 274 A 5Q0	Black			+VC,+VJ,+VF,
					+VI,+VU,+VK
	95B 857 274 A OA6	Agate Grey			+VD,+VG,+VL
	95B 857 274 A 6W0	Luxor Beige			+VE,+VH+VX,
					+VZ,+VM,+VP
	95B 857 274 A OL7	Saddle Tan			+VN
	95B 857 274 A OE1	Carrera Red			+VO
	95B 857 274 A OD9	Pebble Grey			+VQ
	95B 857 274 A 3T0	Espresso			+VR
3	95B 864 131 B	Shelf		1	I4A0/4A3/9AD
	95B 864 131 B 1E0	Black			
(3)	95B 864 131 C	Shelf		1	I4A4/9AD
	95B 864 131 C 1E0	Black			
4	95B 863 170	Mat		1	I9JA
5	95B 864 575	Ashtray		1	I9JB
6	95B 819 203 B	Nozzle		1	I9AQ/9MA
	95B 819 203 B G0B	Galvano silver			
		F >>95FLB 09735			
		F >>95FLB 60210			
		F >>95FLB 83197			
		F >>95FLB 94223			
		F >>95FLB 83201			
		F >>95FLB 83228			
		F >>95FLB 83275			
		Information available			
6	95B 819 203 D	Nozzle		1	I9AQ/9MA
	95B 819 203 D G0B	Galvano silver			
		F 95FLB 09736>>			
		F 95FLB 60211>>			
		F 95FLB 83198>>			
		F 95FLB 94224>>			
		F 95FLB 83202>>			
		F 95FLB 83229>>			
		F 95FLB 83276>>			
(6)	95B 819 203 C	Nozzle		1	I9AQ/9MB
	95B 819 203 C G0B	Galvano silver			
		F >>95FLB 09735			
		F >>95FLB 60210			
		F >>95FLB 83197			

Model: 95B **Model life 2014>>**

Pos	Part Number	Description	Remark	Qty	Model
		F >>95FLB 94223			
		F >>95FLB 83201			
		F >>95FLB 83228			
		F >>95FLB 83275			
		Information available			
(6)	95B 819 203 E	Nozzle		1	I9AQ/9MB
	95B 819 203 E G0B	Galvano silver			
		F 95FLB 09736>>			
		F 95FLB 60211>>			
		F 95FLB 83198>>			
		F 95FLB 94224>>			
		F 95FLB 83202>>			
		F 95FLB 83229>>			
		F 95FLB 83276>>			
7	N 106 021 01	Oval-head screw		4	
8	95B 863 135	Mat		1	I9AD
		Shelf			
9	999 507 130 01	U-clamp		X	

Illustration: 809-30

PORSCHE

Model: 95B **Model life 2014>>**

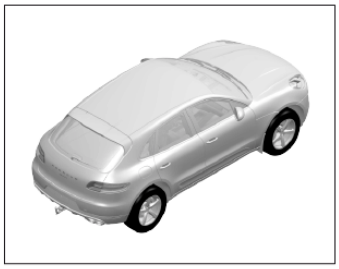

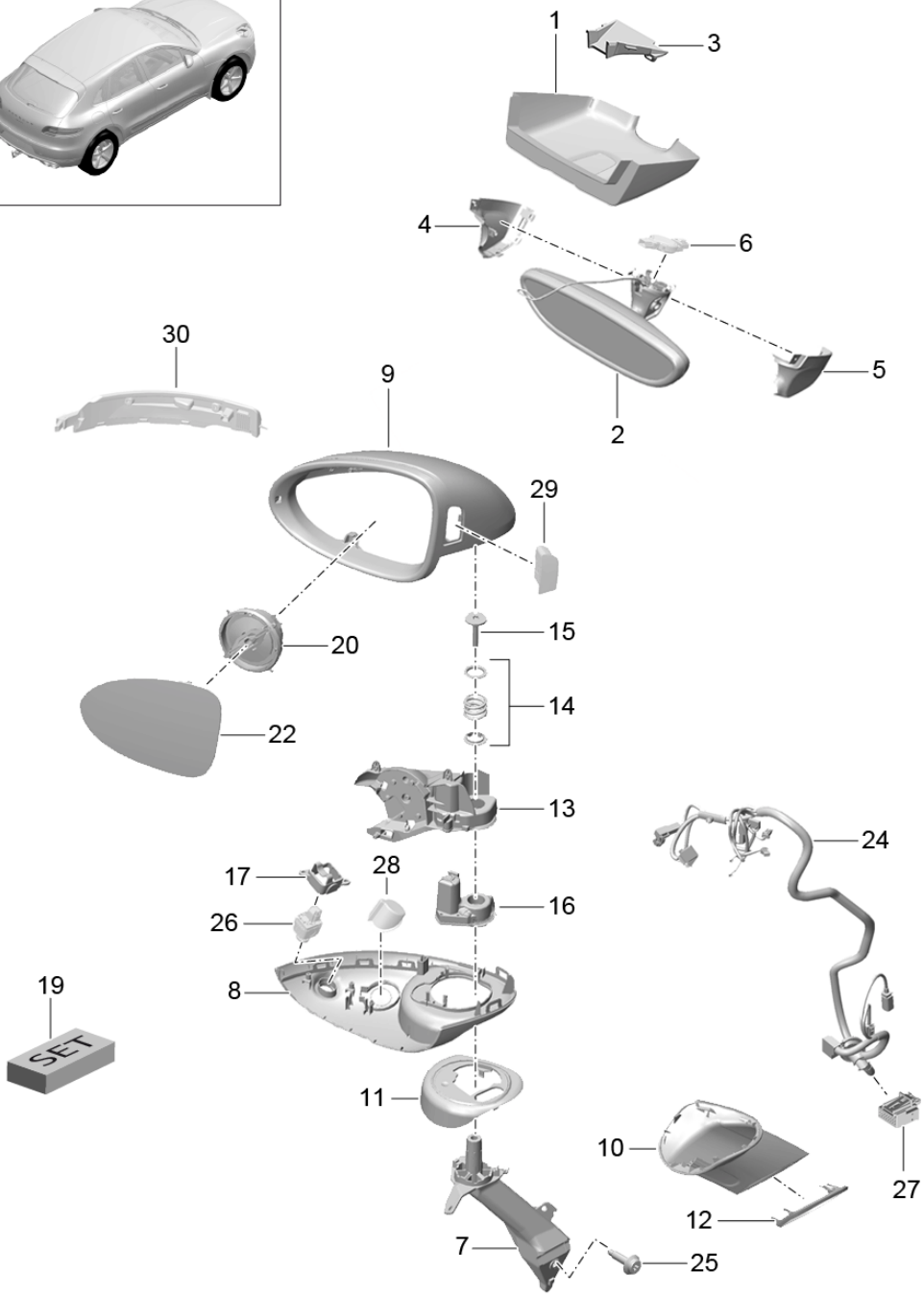

Model: 95B **Model life 2014>>**

Pos	Part Number	Description	Remark	Qty	Model
		Rear-view mirror			I6FG
		Door mirror			
		Accessories			
-		Plate		1	
		for			
		Mirror base			
		Interior mirror			
		POS. 1			
		8/05/00			
		Use			
1	7PP 863 081	Cover		1	I4UD/7Y0
		for			
		Plate			
		Mirror base			
		Interior mirror			
	7PP 863 081 1E0	Satin black			
(1)	7PP 863 081 B	Cover		1	I4UE/4UQ/7Y1
		for			
		Plate			
		Mirror base			
		Interior mirror			
	7PP 863 081 B 1E0	Satin black			
(1)	7PP 863 081 C	Cover		1	I4UE/7Y2/7Y3
					I7Y6/7Y7
		for			
		Plate			
		Mirror base			
		Interior mirror			
	7PP 863 081 C 1E0	Satin black			
(1)	7PP 863 081 D	Cover		1	I4UD/7Y2/7Y3
					I7Y6/7Y7
		for			I8G1/8G2
		Plate			
		Mirror base			
		Interior mirror			
	7PP 863 081 D 1E0	Satin black			
2	7PP 857 511 E	Interior mirror	-(J)	1	I4L2/5RQ/5RR
					I5RT/5RV/5SG
					I5SJ/5SL
		Manually			
		Dimmable			
	7PP 857 511 E 1E0	Satin black			
(2)	7PP 857 511 H	Interior mirror	-(J)	1	I4L6
		Automatic			
		Dimmable			
	7PP 857 511 H 1E0	Satin black			
(2)	958 731 511 02	Interior mirror	(J)	1	
		Manually			
		Dimmable			
		with			
		Screen			
	958 731 511 02 1E0	Satin black			
3	7PP 858 066	Cover		1	I7Y2/7Y3/8G0
					I9Q1
		Camera			I8G1/8G2/9Q1
					I9Q6
4	7PP 858 547	Cap	/L	1	
	7PP 858 547 1E0	Satin black			
		Rear-view mirror			
		Left			
5	7PP 858 548	Cap	/R	1	
	7PP 858 548 1E0	Satin black			
		Rear-view mirror			

Model: 95B **Model life 2014>>**

Pos	Part Number	Description	Remark	Qty	Model
		Right			
6		Rain sensor Rear-view mirror See group 9/04/00			
7	95B 857 539	Mirror base Door mirror	/LL /L	1	IL0L
(7)	95B 857 540	Mirror base Door mirror	/LL /R	1	IL0L
(7)	95B 857 539 A	Mirror base Door mirror	/RL /L	1	IL0R
(7)	95B 857 540 A	Mirror base Door mirror	/RL /R	1	IL0R
8	95B 857 185	Cover	/L	1	I5SG/5SJ/5SL I7X0/7X2/7X8 I7X9/9TH
		Mirror housing Lower			
	95B 857 185 1E0	Black			
(8)	95B 857 185 A	Cover	/L	1	I5SG/5SJ/5SL I7X0/7X2/7X8 I7X9/9TF
		Mirror housing Lower with Light			
	95B 857 185 A 1E0	Black			
(8)	95B 857 185 B	Cover	/L	1	I5SG/5SJ/5SL I8A4/9TH
		Mirror housing Lower with RTV			
	95B 857 185 B 1E0	Black			
(8)	95B 857 185 C	Cover	/L	1	I5SG/5SJ/5SL I8A4/9TF
		Mirror housing Lower with Light And RTV			
	95B 857 185 C 1E0	Black			
(8)	95B 857 185 D	Cover	/L (J)	1	I5SU/9TH
		Mirror housing Lower with Camera			
	95B 857 185 D 1E0	Black			
(8)	95B 857 185 E	Cover	/L (J)	1	I5SU/9TF
		Mirror housing Lower with Camera And Light			
	95B 857 185 E 1E0	Black			
(8)	95B 857 186	Cover	/R	1	I5RQ/5RR/5RT I5RV/7X0/7X2 I7X8/7X9/9TH
		Mirror housing Lower			
	95B 857 186 1E0	Black			

Model: 95B **Model life 2014>>**

Pos	Part Number	Description	Remark	Qty	Model
(8)	95B 857 186 A	Cover Mirror housing Lower with Light	/R	1	I5RQ/5RR/5RT I5RV/7X0/7X2 I7X8/7X9/9TF
	95B 857 186 A 1E0	Black			
(8)	95B 857 186 B	Cover Mirror housing Lower with RTV	/R	1	I5RQ/5RR/5RT I5RV/8A4/9TH
	95B 857 186 B 1E0	Black			
(8)	95B 857 186 C	Cover Mirror housing Lower with Light And RTV	/R	1	I5RQ/5RR/5RT I5RV/8A4/9TF
	95B 857 186 C 1E0	Black			
(8)	95B 857 186 D	Cover Mirror housing Lower with Camera	/R (J)	1	I5RP/9TH
	95B 857 186 D 1E0	Black			
(8)	95B 857 186 E	Cover Mirror housing Lower with Camera And Light	/R (J)	1	I5RP/9TF
	95B 857 186 E 1E0	Black			
9	95B 857 527	Mirror housing Door mirror without Lane Change Assistant	/L	1	I7Y0/7Y2/7Y6
	95B 857 527 G2X	Prime coated			
(9)	95B 857 527 A	Mirror housing Door mirror with Lane Change Assistant	/L	1	I7Y1/7Y3/7Y7
	95B 857 527 A G2X	Prime coated			
(9)	95B 857 528	Mirror housing Door mirror without Lane Change Assistant	/R	1	I7Y0/7Y2/7Y6
	95B 857 528 G2X	Prime coated			
(9)	95B 857 528 A	Mirror housing Door mirror with Lane Change Assistant	/R	1	I7Y1/7Y3/7Y7
	95B 857 528 A G2X	Prime coated			
10	95B 857 085	Cap Mirror base	/LL /L	1	IL0L
	95B 857 085 1E0	Satin black			
(10)	95B 857 086	Cap Mirror base	/LL /R	1	IL0L

Model: 95B **Model life 2014>>**

Pos	Part Number	Description	Remark	Qty	Model
	95B 857 086 1E0	Satin black			
(10)	95B 857 085 A	Cap Mirror base	/RL /L	1	IL0R
	95B 857 085 A 1E0	Satin black			
(10)	95B 857 086 A	Cap Mirror base	/RL /R	1	IL0R
	95B 857 086 A 1E0	Satin black			
11	95B 857 555	Gasket Mirror base Upper	/L	1	
(11)	95B 857 556	Gasket Mirror base Upper	/R	1	
12	95B 857 679	Desk pad Mirror base Lower	/L	1	
12	95B 857 680	Desk pad Mirror base Lower	/R	1	
13	95B 858 298	Plate	/L	1	
13	95B 858 298 B	Plate	/L	1	
(13)	95B 858 298 A	Plate	/R	1	
(13)	95B 858 298 C	Plate	/R	1	
14	95B 857 981	Spring Repair kit		2	
15	95B 858 689	Screw Spring		2	
16	95B 959 577	Adjusting motor Door mirror	/L	1	
(16)	95B 959 578	Adjusting motor Door mirror	/R	1	
17	95B 857 117	Clamp Retaining bar RTV	/L	1	I8A4
(17)	95B 857 118	Clamp Retaining bar RTV	/R	1	I8A4
(17)	95B 857 117 A	Clamp Retaining bar Camera Version for japan		1	IL0R/5SU
(17)	95B 857 118 A	Clamp Retaining bar Camera Version for japan		1	IL0L/5SU
19	95B 898 813	Screw Repair kit		1	
20	8T0 959 577	Adjusting motor Mirror glass		1	I6XP/6XW
(20)	8T0 959 577 A	Adjusting motor Mirror glass		1	I6XQ/6XT
22	95B 857 521	Mirror glass Plane	/L	1	IL0L/5SG/6XP I6XQ
(22)	95B 857 521 A	Mirror glass Aspherical	/L	1	IL0L/5SL/6XP I6XQ
(22)	95B 857 521 B	Mirror glass Convex	/L	1	IL0R/5SJ/6XP I6XQ/6XT
(22)	95B 857 521 C	Mirror glass Plane	/L	1	IL0L/5SG/6XT I6XW

Model: 95B **Model life 2014>>**

Pos	Part Number	Description	Remark	Qty	Model
(22)	95B 857 521 D	Mirror glass Aspherical	/L	1	IL0L/5SL/6XT I6XW
(22)	95B 857 521 E	Mirror glass Convex	/L	1	IL0R/5SG/6XT I6XW
(22)	95B 857 522	Mirror glass Convex	/R	1	IL0L/5RQ/6XP I6XQ
(22)	95B 857 522 B	Mirror glass Convex	/R (PME)	1	IL0L/5RT/6XP I6XQ
(22)	95B 857 522 C	Mirror glass Convex	/R	1	IL0L/5RQ/6XT I6XW
(22)	95B 857 522 E	Mirror glass Convex	/R (PME)	1	IL0L/5RT/6XT I6XW
(22)	95B 857 522 F	Mirror glass Aspherical	/R	1	IL0R/5RV/6XP I6XQ
(22)	95B 857 522 G	Mirror glass Aspherical	/R	1	IL0R/5RV/6XT I6XW
25	999 073 192 01	Pan-head screw M8X33		1	
24	95B 971 469 AG	Wiring harness	/R	1	I6XT/7Y1/7Y3 I7Y7/8A4/9TF
(24)		Wiring harness	/R	1	-I7Y1/-I7Y3 -I7Y7/I6XT I8A4/9TF
(24)		Wiring harness	/R	1	-I7Y1/-I7Y3 -I7Y7/-I9TF I6XT/8A4
(24)	95B 971 469 AJ	Wiring harness	/L	1	I6XT/7Y1/7Y3 I7Y7/8A4/9TF
(24)		Wiring harness	/L	1	-I7Y1/-I7Y3 -I7Y7/I6XT I8A4/9TF
(24)		Wiring harness	/L	1	-I7Y1/-I7Y3 -I7Y7/-I9TF I6XT/8A4
(24)	95B 971 469 AD	Wiring harness	/R	1	I6XQ/7Y1/7Y3 I7Y7/8A4/9TF
(24)		Wiring harness	/R	1	-I7Y1/-I7Y3 -I7Y7/I6XQ I8A4/9TF
(24)		Wiring harness	/R	1	-I7Y1/-I7Y3 -I7Y7/-I9TF I6XQ/8A4
(24)	95B 971 469 Q	Wiring harness	/L	1	I6XQ/7Y1/7Y3 I7Y7/8A4/9TF
(24)		Wiring harness	/L	1	-I7Y1/-I7Y3 -I7Y7/I6XQ I8A4/9TF
(24)		Wiring harness	/L	1	-I7Y1/-I7Y3 -I7Y7/-I9TF I6XQ/8A4
(24)	95B 971 469 AK	Wiring harness	/L /R	2	-I8A4/I6XT I7Y1/7Y3/7Y7 I9TF
(24)		Wiring harness	/L /R	2	-I7Y1/-I7Y3 -I7Y7/-I8A4

Model: 95B **Model life 2014>>**

Pos	Part Number	Description	Remark	Qty	Model
(24)		Wiring harness	/L /R	2	I6XT/9TF -I7Y1/-I7Y3 -I7Y7/-I8A4 -I9TF/I6XT
(24)	95B 971 469 AE	Wiring harness	/L /R	2	-I8A4/I6XQ I7Y1/7Y3/7Y7 I9TF
(24)		Wiring harness	/L /R	2	-I7Y1/-I7Y3 -I7Y7/-I8A4 I6XQ/9TF
(24)		Wiring harness	/L /R	2	-I7Y1/-I7Y3 -I7Y7/-I8A4 -I9TF/I6XQ
(24)	95B 971 469 AR	Wiring harness	/R	1	I6XW/7Y1/7Y3 I7Y7/8A4/9TF
(24)		Wiring harness	/R	1	-I7Y1/-I7Y3 -I7Y7/I6XW I8A4/9TF
(24)		Wiring harness	/R	1	-I7Y1/-I7Y3 -I7Y7/-I9TF I6XW/8A4
(24)	95B 971 469 BC	Wiring harness	/L	1	I6XW/7Y1/7Y3 I7Y7/8A4/9TF
(24)		Wiring harness	/L	1	-I7Y1/-I7Y3 -I7Y7/I6XW I8A4/9TF
(24)		Wiring harness	/L	1	-I7Y1/-I7Y3 -I7Y7/-I9TF I6XW/8A4
(24)	95B 971 469 M	Wiring harness	/R	1	I6XP/7Y1/7Y3 I7Y7/8A4/9TF
(24)		Wiring harness	/R	1	-I7Y1/-I7Y3 -I7Y7/I6XP I8A4/9TF
(24)		Wiring harness	/R	1	-I7Y1/-I7Y3 -I7Y7/-I9TF I6XP/8A4
(24)	95B 971 469 C	Wiring harness	/L	1	I6XP/7Y1/7Y3 I7Y7/8A4/9TF
(24)		Wiring harness	/L	1	-I7Y1/-I7Y3 -I7Y7/I6XP I8A4/9TF
(24)		Wiring harness	/L	1	-I7Y1/-I7Y3 -I7Y7/-I9TF I6XP/8A4
(24)	95B 971 469 BJ	Wiring harness	/L /R	2	-I8A4/I6XW I7Y1/7Y3/7Y7 I9TF
(24)		Wiring harness	/L /R	2	-I7Y1/-I7Y3 -I7Y7/-I8A4 I6XW/9TF
(24)		Wiring harness	/L /R	2	-I7Y1/-I7Y3 -I7Y7/-I8A4 -I9TF/I6XW
(24)	95B 971 469 R	Wiring harness	/L /R	2	-I8A4/I6XP I7Y1/7Y3/7Y7 I9TF
(24)		Wiring harness	/L /R	2	-I7Y1/-I7Y3 -I7Y7/-I8A4 I6XP/9TF
(24)		Wiring harness	/L /R	2	-I7Y1/-I7Y3 -I7Y7/-I8A4 -I9TF/I6XP

Model: 95B **Model life 2014>>**

Pos	Part Number	Description	Remark	Qty	Model
(24)	95B 971 469 AA	Wiring harness	/L /R	2	IB0L/6XQ
(24)	95B 971 469 G	Wiring harness	/L /R	2	IB0L/6XP
25	999 073 192 01	Pan-head screw M8X33		1	
26		Camera RTV See group 9/11/00		1	I8A4
(26)		Camera Version for japan See group 9/11/01		1	
27	999 656 412 40	Connector housing Wiring harness		1	
28		Light See group 9/03/04		1	I9TF
29		Warning light Lane Change Assistant See group 9/01/04		1	I7Y1/7Y2/7Y3 I7Y6/7Y7
30		Direction indicator light See group 9/03/04		1	I8F2

Illustration: 809-40

PORSCHE

Model: 95B **Model life 2014>>**

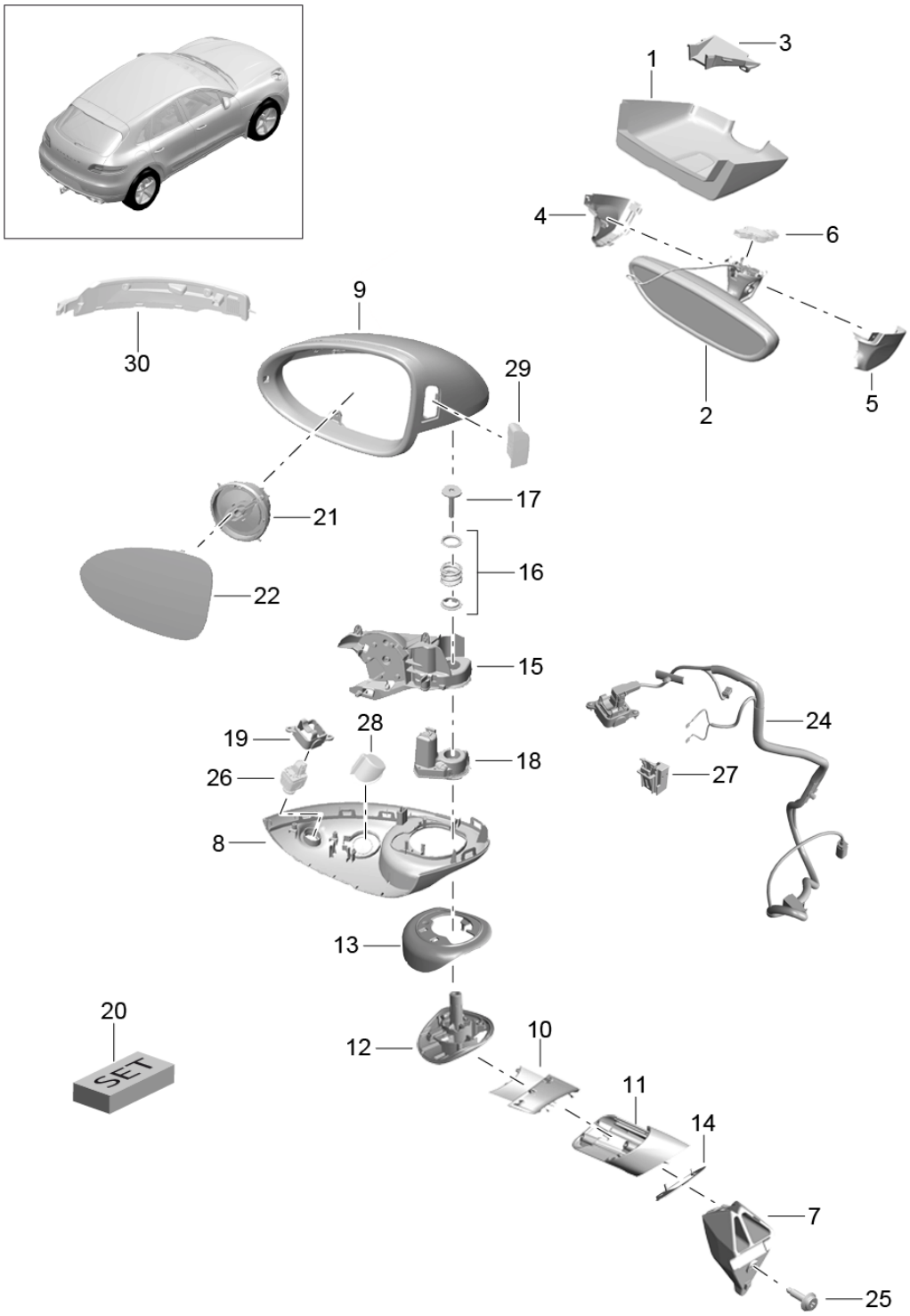

Model: 95B **Model life 2014>>**

Pos	Part Number	Description	Remark	Qty	Model
		Rear-view mirror			I6FB
		Door mirror			
		Accessories			
		Sport Design package			
-		Plate		1	
		for			
		Mirror base			
		Interior mirror			
		POS. 1			
		8/05/00			
		Use			
1	7PP 863 081	Cover		1	I4UD/7Y0
		for			
		Plate			
		Mirror base			
		Interior mirror			
	7PP 863 081 1E0	Satin black			
(1)	7PP 863 081 B	Cover		1	I4UE/4UQ/7Y1
		for			
		Plate			
		Mirror base			
		Interior mirror			
	7PP 863 081 B 1E0	Satin black			
(1)	7PP 863 081 C	Cover		1	I4UE/7Y2/7Y3
					I7Y6/7Y7
		for			
		Plate			
		Mirror base			
		Interior mirror			
	7PP 863 081 C 1E0	Satin black			
(1)	7PP 863 081 D	Cover		1	I7Y2/7Y3/7Y6
					I7Y7
		for			I4UD/8G1/8G2
		Plate			
		Mirror base			
		Interior mirror			
	7PP 863 081 D 1E0	Satin black			
2	7PP 857 511 E	Interior mirror	-(J)	1	I4L2/5RQ/5RR
					I5RT/5RV/5SG
					I5SJ/5SL
		Manually			
		Dimmable			
	7PP 857 511 E 1E0	Satin black			
(2)	7PP 857 511 H	Interior mirror	-(J)	1	I4L6
		Automatic			
		Dimmable			
	7PP 857 511 H 1E0	Satin black			
(2)	958 731 511 02	Interior mirror	(J)	1	
		Manually			
		Dimmable			
		with			
		Screen			
	958 731 511 02 1E0	Satin black			
3	7PP 858 066	Cover		1	I7Y2/7Y3/8G0
					I9Q1
		Camera			I8G1/8G2/9Q1
					I9Q6
4	7PP 858 547	Cap	/L	1	
	7PP 858 547 1E0	Satin black			
		Rear-view mirror			
		Left			
5	7PP 858 548	Cap	/R	1	
	7PP 858 548 1E0	Satin black			

Model: 95B **Model life 2014>>**

Pos	Part Number	Description	Remark	Qty	Model
		Rear-view mirror Right			
6		Rain sensor Rear-view mirror See group 9/04/00			
7	95B 857 541	Mirror base Door mirror	/L	1	
(7)	95B 857 542	Mirror base Door mirror	/R	1	
8	95B 857 185 F	Cover	/L	1	I5SG/5SJ/5SL I7X0/7X2/7X8 I7X9/9TH
		Mirror housing Lower			
	95B 857 185 F G2X	Prime coated			
(8)	95B 857 185 G	Cover	/L	1	I5SG/5SJ/5SL I7X0/7X2/7X8 I7X9/9TF
		Mirror housing Lower with Light			
	95B 857 185 G G2X	Prime coated			
(8)	95B 857 185 H	Cover	/L	1	I5SG/5SJ/5SL I8A4/9TH
		Mirror housing Lower with RTV			
	95B 857 185 H G2X	Prime coated			
(8)	95B 857 185 J	Cover	/L	1	I5SG/5SJ/5SL I8A4/9TF
		Mirror housing Lower with Light And RTV			
	95B 857 185 J G2X	Prime coated			
(8)	95B 857 185 K	Cover Mirror housing Lower with Camera	/L (J)	1	I5SU/9TH
	95B 857 185 K G2X	Prime coated			
(8)	95B 857 185 L	Cover Mirror housing Lower with Camera And Light	/L (J)	1	I5SU/9TF
	95B 857 185 L G2X	Prime coated			
(8)	95B 857 186 F	Cover	/R	1	I5RQ/5RR/5RT I5RV/7X0/7X2 I7X8/7X9/9TH
		Mirror housing Lower			
	95B 857 186 F G2X	Prime coated			
(8)	95B 857 186 G	Cover	/R	1	I5RQ/5RR/5RT I5RV/7X0/7X2 I7X8/7X9/9TF

Model: 95B **Model life 2014>>**

Pos	Part Number	Description	Remark	Qty	Model
		Mirror housing Lower with Light			
	95B 857 186 G G2X	Prime coated			
(8)	95B 857 186 H	Cover	/R	1	I5RQ/5RR/5RT I5RV/8A4/9TH
		Mirror housing Lower with RTV			
	95B 857 186 H G2X	Prime coated			
(8)	95B 857 186 J	Cover	/R	1	I5RQ/5RR/5RT I5RV/8A4/9TF
		Mirror housing Lower with Light And RTV			
	95B 857 186 J G2X	Prime coated			
(8)	95B 857 186 K	Cover	/R (J)	1	I5RP/9TH
		Mirror housing Lower with Camera			
	95B 857 186 K G2X	Prime coated			
(8)	95B 857 186 L	Cover	/R (J)	1	I5RP/9TF
		Mirror housing Lower with Camera And Light			
	95B 857 186 L G2X	Prime coated			
9	95B 857 527	Mirror housing	/L	1	I7Y0/7Y2/7Y6
		Door mirror without Lane Change Assistant			
	95B 857 527 G2X	Prime coated			
(9)	95B 857 527 A	Mirror housing	/L	1	I7Y1/7Y3/7Y7
		Door mirror with Lane Change Assistant			
	95B 857 527 A G2X	Prime coated			
(9)	95B 857 528	Mirror housing	/R	1	I7Y0/7Y2/7Y6
		Door mirror without Lane Change Assistant			
	95B 857 528 G2X	Prime coated			
(9)	95B 857 528 A	Mirror housing	/R	1	I7Y1/7Y3/7Y7
		Door mirror with Lane Change Assistant			
	95B 857 528 A G2X	Prime coated			
10	95B 857 109	Cover	/LL /L	1	IL0L
		Mirror base Inner			
	95B 857 109 G2X	Prime coated			
(10)	95B 857 109 A	Cover	/LL /R	1	IL0L
		Mirror base Inner			
	95B 857 109 A G2X	Prime coated			

Model: 95B **Model life 2014>>**

Pos	Part Number	Description	Remark	Qty	Model
(10)	95B 857 109 B	Cover Mirror base Inner	/RL /L	1	IL0R
	95B 857 109 B G2X	Prime coated			
(10)	95B 857 109 C	Cover Mirror base Inner	/RL /R	1	IL0R
	95B 857 109 C G2X	Prime coated			
11	95B 857 110	Cover Mirror base Outer	/LL /L	1	IL0L
	95B 857 110 G2X	Prime coated			
(11)	95B 857 110 A	Cover Mirror base Outer	/LL /R	1	IL0L
	95B 857 110 A G2X	Prime coated			
(11)	95B 857 110 B	Cover Mirror base Outer	/RL /L	1	IL0R
	95B 857 110 B G2X	Prime coated			
(11)	95B 857 110 C	Cover Mirror base Outer	/RL /R	1	IL0R
	95B 857 110 C G2X	Prime coated			
12	95B 861 270	Swivel frame Mirror base	/LL /L	1	IL0L
	95B 861 270 G2X	Prime coated			
(12)	95B 861 270 C	Swivel frame Mirror base	/LL /R	1	IL0L
	95B 861 270 C G2X	Prime coated			
(12)	95B 861 270 A	Swivel frame Mirror base	/RL /L	1	IL0R
	95B 861 270 A G2X	Prime coated			
(12)	95B 861 270 B	Swivel frame Mirror base	/RL /R	1	IL0R
	95B 861 270 B G2X	Prime coated			
13	95B 858 345	Gasket Mirror base Upper	/L	1	
(13)	95B 858 346	Gasket Mirror base Upper	/R	1	
14	95B 857 543	Desk pad Mirror base Lower	/L	1	
(14)	95B 857 544	Desk pad Mirror base Lower	/R	1	
15	95B 858 298	Plate	/L	1	
15	95B 858 298 B	Plate	/L	1	
(15)	95B 858 298 A	Plate	/R	1	
(15)	95B 858 298 C	Plate	/R	1	
16	95B 857 981	Spring Repair kit		2	
17	95B 858 689	Screw Spring		2	
18	95B 959 577	Adjusting motor Door mirror	/L	1	
(18)	95B 959 578	Adjusting motor Door mirror	/R	1	
19	95B 857 117	Clamp Retaining bar RTV	/L	1	I8A4

Model: 95B **Model life 2014>>**

Pos	Part Number	Description	Remark	Qty	Model
(19)	95B 857 118	Clamp Retaining bar RTV	/R	1	I8A4
(19)	95B 857 117 A	Clamp Retaining bar Camera Version for japan		1	IL0R/5SU
(19)	95B 857 118 A	Clamp Retaining bar Camera Version for japan		1	IL0L/5SU
20	95B 898 817	Screw Repair kit		1	
21	8T0 959 577	Adjusting motor Mirror glass		1	I6XP/6XW
(21)	8T0 959 577 A	Adjusting motor Mirror glass		1	I6XQ/6XT
22	95B 857 521	Mirror glass Plane	/L	1	IL0L/5SG/6XP I6XQ
(22)	95B 857 521 A	Mirror glass Aspherical	/L	1	IL0L/5SL/6XP I6XQ
(22)	95B 857 521 B	Mirror glass Convex	/L	1	IL0R/5SJ/5SU I6XP/6XQ
(22)	95B 857 521 C	Mirror glass Plane	/L	1	IL0L/5SG/6XT I6XW
(22)	95B 857 521 D	Mirror glass Aspherical	/L	1	IL0L/5SL/6XT I6XW
(22)	95B 857 521 E	Mirror glass Convex	/L	1	IL0R/5SJ/6XT I6XW
(22)	95B 857 522	Mirror glass Convex	/R	1	IL0L/5RQ/6XP I6XQ
(22)	95B 857 522 B	Mirror glass Convex	/R (PME)	1	IL0L/5RT/6XP I6XQ
(22)	95B 857 522 C	Mirror glass Convex	/R	1	IL0L/5RQ/6XT I6XW
(22)	95B 857 522 E	Mirror glass Convex	/R (PME)	1	IL0L/5RT/6XT I6XW
(22)	95B 857 522 F	Mirror glass Aspherical	/R	1	IL0R/5RV/6XP I6XQ
(22)	95B 857 522 G	Mirror glass Aspherical	/R	1	IL0R/5RV/6XT I6XW
24	95B 971 469 AG	Wiring harness	/R	1	I6XT/7Y1/7Y3 I7Y7/8A4/9TF
(24)		Wiring harness	/R	1	-I7Y1/-I7Y3 -I7Y7/I6XT I8A4/9TF
(24)		Wiring harness	/R	1	-I7Y1/-I7Y3 -I7Y7/-I9TF I6XT/8A4
(24)	95B 971 469 AJ	Wiring harness	/L	1	I6XT/7Y1/7Y3 I7Y7/8A4/9TF

Model: 95B **Model life 2014>>**

Pos	Part Number	Description	Remark	Qty	Model
(24)		Wiring harness	/L	1	-I7Y1/-I7Y3 -I7Y7/I6XT I8A4/9TF
(24)		Wiring harness	/L	1	-I7Y1/-I7Y3 -I7Y7/-I9TF I6XT/8A4
(24)	95B 971 469 AD	Wiring harness	/R	1	I6XQ/7Y1/7Y3 I7Y7/8A4/9TF
(24)		Wiring harness	/R	1	-I7Y1/-I7Y3 -I7Y7/I6XQ I8A4/9TF
(24)		Wiring harness	/R	1	-I7Y1/-I7Y3 -I7Y7/-I9TF I6XQ/8A4
(24)	95B 971 469 Q	Wiring harness	/L	1	I6XQ/7Y1/7Y3 I7Y7/8A4/9TF
(24)		Wiring harness	/L	1	-I7Y1/-I7Y3 -I7Y7/I6XQ I8A4/9TF
(24)		Wiring harness	/L	1	-I7Y1/-I7Y3 -I7Y7/-I9TF I6XQ/8A4
(24)	95B 971 469 AK	Wiring harness	/L /R	2	-I8A4/I6XT I7Y1/7Y3/7Y7 I9TF
(24)		Wiring harness	/L /R	2	-I7Y1/-I7Y3 -I7Y7/-I8A4 I6XT/9TF
(24)		Wiring harness	/L /R	2	-I7Y1/-I7Y3 -I7Y7/-I8A4 -I9TF/I6XT
(24)	95B 971 469 AE	Wiring harness	/L /R	2	-I8A4/I6XQ I7Y1/7Y3/7Y7 I9TF
(24)		Wiring harness	/L /R	2	-I7Y1/-I7Y3 -I7Y7/-I8A4 I6XQ/9TF
(24)		Wiring harness	/L /R	2	-I7Y1/-I7Y3 -I7Y7/-I8A4 -I9TF/I6XQ
(24)	95B 971 469 AR	Wiring harness	/R	1	I6XW/7Y1/7Y3 I7Y7/8A4/9TF
(24)		Wiring harness	/R	1	-I7Y1/-I7Y3 -I7Y7/I6XW I8A4/9TF
(24)		Wiring harness	/R	1	-I7Y1/-I7Y3 -I7Y7/-I9TF I6XW/8A4
(24)	95B 971 469 BC	Wiring harness	/L	1	I6XW/7Y1/7Y3 I7Y7/8A4/9TF
(24)		Wiring harness	/L	1	-I7Y1/-I7Y3 -I7Y7/I6XW I8A4/9TF
(24)		Wiring harness	/L	1	-I7Y1/-I7Y3 -I7Y7/-I9TF I6XW/8A4
(24)	95B 971 469 M	Wiring harness	/R	1	I6XP/7Y1/7Y3 I7Y7/8A4/9TF
(24)		Wiring harness	/R	1	-I7Y1/-I7Y3 -I7Y7/I6XP I8A4/9TF
(24)		Wiring harness	/R	1	-I7Y1/-I7Y3 -I7Y7/-I9TF

Model: 95B **Model life 2014>>**

Pos	Part Number	Description	Remark	Qty	Model
					I6XP/8A4
(24)	95B 971 469 C	Wiring harness	/L	1	I6XP/7Y1/7Y3 I7Y7/8A4/9TF
(24)		Wiring harness	/L	1	-I7Y1/-I7Y3 -I7Y7/I6XP I8A4/9TF
(24)		Wiring harness	/L	1	-I7Y1/-I7Y3 -I7Y7/-I9TF I6XP/8A4
(24)	95B 971 469 BJ	Wiring harness	/L /R	2	-I8A4/I6XW I7Y1/7Y3/7Y7 I9TF
(24)		Wiring harness	/L /R	2	-I7Y1/-I7Y3 -I7Y7/-I8A4 I6XW/9TF
(24)		Wiring harness	/L /R	2	-I7Y1/-I7Y3 -I7Y7/-I8A4 -I9TF/I6XW
(24)	95B 971 469 R	Wiring harness	/L /R	2	-I8A4/I6XP I7Y1/7Y3/7Y7 I9TF
(24)		Wiring harness	/L /R	2	-I7Y1/-I7Y3 -I7Y7/-I8A4 I6XP/9TF
(24)		Wiring harness	/L /R	2	-I7Y1/-I7Y3 -I7Y7/-I8A4 -I9TF/I6XP
(24)	95B 971 469 AA	Wiring harness	/L /R	2	IB0L/6XQ
(24)	95B 971 469 G	Wiring harness	/L /R	2	IB0L/6XP
25	999 073 192 01	Pan-head screw M8X33		1	
26		Camera RTV See group 9/11/00		1	I8A4
(26)		Camera Version for japan See group 9/11/01		1	
27	999 656 412 40	Connector housing Wiring harness		1	
28		Light See group 9/03/04		1	I9TF
29		Warning light Lane Change Assistant See group 9/01/04		1	I7Y1/7Y2/7Y3 I7Y6/7Y7
30		Direction indicator light See group 9/03/04		1	I8F2

Illustration: 810-00

Model: 95B **Model life 2014>>**

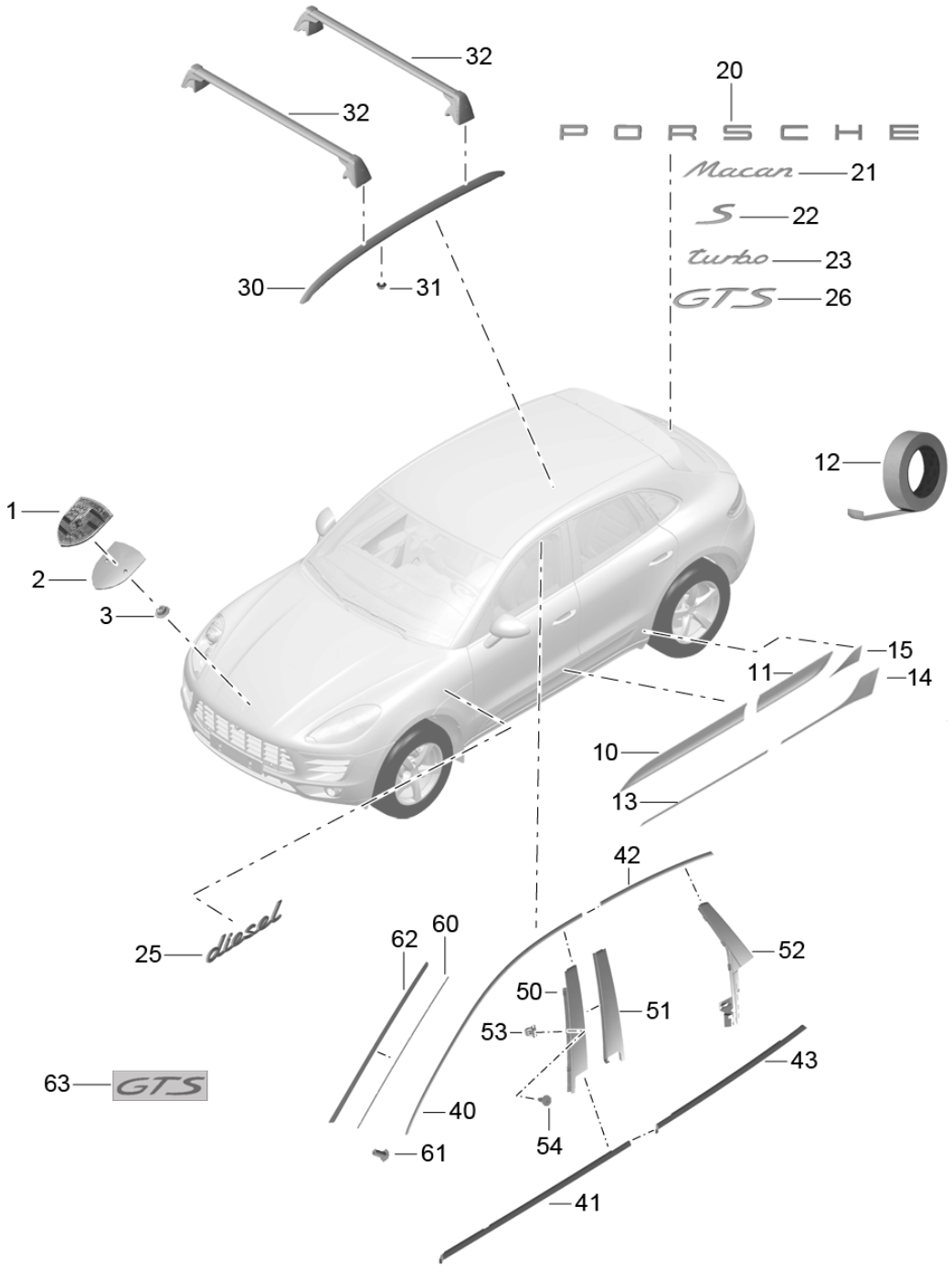

Model: 95B **Model life 2014>>**

Pos	Part Number	Description	Remark	Qty	Model
		Insignias			
		Decorative fittings			
		Stone guard film			
1	991 559 211 00	Lid emblem		1	
2	991 559 215 02	Desk pad		1	
		Porsche crest			
3	WHT 004 974	Nut		2	
		Mount			
		Porsche crest			
10	95B 898 561	Cover	/L	1	I6H0
		Door			
		Front			
	95B 898 561 OK1	Black mat			
(10)	95B 898 562	Cover	/R	1	I6H0
		Door			
		Front			
	95B 898 562 OK1	Black mat			
(10)	95B 898 561 A	Cover	/L	1	I6H1/6H5/6H6
		Door			
		Front			
	95B 898 561 A G2X	Prime coated			
(10)	95B 898 562 A	Cover	/R	1	I6H1/6H5/6H6
		Door			
		Front			
	95B 898 562 A G2X	Prime coated			
(10)	95B 898 563	Cover	/L	1	I6H3
		Door			
		Front			
		Carbon			
(10)	95B 898 564	Cover	/R	1	I6H3
		Door			
		Front			
		Carbon			
(10)	95B 837 901 BY	Cover	/L	1	IE0W/6H3
		Door			
		Front			
		Carbon			
		with			
		GTS			
		Logo			
(10)	95B 837 902 BY	Cover	/R	1	IE0W/6H3
		Door			
		Front			
		Carbon			
		with			
		GTS			
		Logo			
(10)	95B 837 901 AY	Cover	/L 15-	1	I6H3
		Door			
		Front			
		Carbon			
(10)	95B 837 902 AY	Cover	/R 15-	1	I6H3
		Door			
		Front			
		Carbon			
11	95B 898 565	Cover	/L	1	I6H0
		Door			
		Rear			
	95B 898 565 OK1	Black mat			
(11)	95B 898 566	Cover	/R	1	I6H0
		Door			
		Rear			
	95B 898 566 OK1	Black mat			

Model: 95B **Model life 2014>>**

Pos	Part Number	Description	Remark	Qty	Model
(11)	95B 898 565 A	Cover Door Rear Prime coated	/L	1	I6H1 I6H5
(11)	95B 898 566 A	Cover Door Rear Prime coated	/R	1	I6H1 I6H5
(11)	95B 898 567	Cover Door Rear Carbon	/L	1	I6H3
(11)	95B 898 568	Cover Door Rear Carbon	/R	1	I6H3
(11)	95B 839 901 AY	Cover Door Rear Carbon	/L 15-	1	I6H3
(11)	95B 839 902 AY	Cover Door Rear Carbon	/R 15-	1	I6H3
12	95B 898 633	Repair kit Adhesive tape Door Front and rear	/L	1	I6H0 I6H1 I6H5
(12)	95B 898 634	Repair kit Adhesive tape Door Front and rear	/R	1	I6H0 I6H1 I6H5
(12)	95B 898 635	Repair kit Adhesive tape Door Front and rear		1	I6H3
13	95B 853 823	Stone guard film Door Front	/L	1	I6EC
(13)	95B 853 824	Stone guard film Door Front	/R	1	I6EC
14	95B 853 931	Stone guard film Door Rear	/L	1	I6EC
(14)	95B 853 932	Stone guard film Door Rear	/R	1	I6EC
15	95B 854 931	Stone guard film Door Rear	/L	1	I6EA/6ET
(15)	95B 854 932	Stone guard film Door Rear	/R	1	I6EA/6ET
20	95B 853 687	Logo Porsche Rear Chrome		1	I0NA/0NB
(20)	95B 853 687 A	Logo Porsche Rear Black mat		1	IE0W/0NA/0NB
21	95B 853 675	Logo		1	I0NB

Model: 95B **Model life 2014>>**

Pos	Part Number	Description	Remark	Qty	Model
		Macan Rear Chrome			
(21)	95B 853 675 D	Logo		1	IE0W/0NB
		Macan Rear Black mat			
22	95B 853 675 A	Logo		1	IDD7/DU0/D1V ID43/D51/0NB
		S Rear Chrome			
23	95B 853 675 B	Logo		1	IDU1/0NB
		Turbo Rear Chrome			
25	95B 854 499 A	Logo	/L	1	IDD7/DE5/D1V ID43/D51/0NB
		Diesel Lid Front Chrome			
(25)	95B 854 500 A	Logo	/R	1	IDD7/DE5/D1V ID43/D51/0NB
		Diesel Lid Front Chrome			
26	95B 853 675 E	Logo		1	ID4A/E0W/0NB
		GTS Rear Black mat			
30	95B 860 025 A	Roof rail Black	/L	1	I3S5/5W4
(30)	95B 860 043 A	Roof rail Silver	/L	1	I3S1/5W1
(30)	95B 860 026 A	Roof rail Black	/R	1	I3S5/5W4
(30)	95B 860 044 A	Roof rail Silver	/R	1	I3S1/5W1
31	N 023 002 13	Hexagon nut		X	I3S1/3S5/5W1 I5W4
32	95B 860 019 B	Cross member		1	I5W1/5W4
40	95B 853 985	Moulding Door Front Upper	/L	1	IQJ2
	95B 853 985 GV9	Galvano silver			
(40)	95B 853 985 A	Moulding Door Front Upper	/L	1	IQJ4
	95B 853 985 A 041	Black			
(40)	95B 853 985 B	Moulding Door Front Upper	/L	1	IQJ6
	95B 853 985 B A78	Black mat			
(40)	95B 853 986	Moulding Door Front Upper	/R	1	IQJ2
	95B 853 986 GV9	Galvano silver			

Model: 95B **Model life 2014>>**

Pos	Part Number	Description	Remark	Qty	Model
(40)	95B 853 986 A	Moulding Door Front Upper	/R	1	IQJ4
	95B 853 986 A 041	Black			
(40)	95B 853 986 B	Moulding Door Front Upper	/R	1	IQJ6
	95B 853 986 B A78	Black mat			
41	95B 837 475	Moulding with Gasket Door Front	/L	1	IQJ2
	95B 837 475 GV9	Galvano silver			
(41)	95B 837 475 A	Moulding with Gasket Door Front	/L	1	IQJ4
	95B 837 475 A 041	Black			
(41)	95B 837 475 B	Moulding with Gasket Door Front	/L	1	IQJ6
	95B 837 475 B A78	Black mat			
(41)	95B 837 476	Moulding with Gasket Door Front	/R	1	IQJ2
	95B 837 476 GV9	Galvano silver			
(41)	95B 837 476 A	Moulding with Gasket Door Front	/R	1	IQJ4
	95B 837 476 A 041	Black			
(41)	95B 837 476 B	Moulding with Gasket Door Front	/R	1	IQJ6
	95B 837 476 B A78	Black mat			
42	95B 853 907	Moulding Door Rear Upper	/L	1	IQJ2
	95B 853 907 GV9	Galvano silver			
(42)	95B 853 907 A	Moulding Door Rear Upper	/L	1	IQJ4
	95B 853 907 A 041	Black			
(42)	95B 853 907 B	Moulding Door Rear Upper	/L	1	IQJ6
	95B 853 907 B A78	Black mat			
(42)	95B 853 908	Moulding Door	/R	1	IQJ2

Model: 95B **Model life 2014>>**

Pos	Part Number	Description	Remark	Qty	Model
		Rear Upper			
	95B 853 908 GV9	Galvano silver			
(42)	95B 853 908 A	Moulding Door Rear Upper	/R	1	IQJ4
	95B 853 908 A 041	Black			
(42)	95B 853 908 B	Moulding Door Rear Upper	/R	1	IQJ6
	95B 853 908 B A78	Black mat			
43	95B 839 475	Moulding with Gasket Door Rear	/L	1	IQJ2
	95B 839 475 GV9	Galvano silver			
(43)	95B 839 475 A	Moulding with Gasket Door Rear	/L	1	IQJ4
	95B 839 475 A 041	Black			
(43)	95B 839 475 B	Moulding with Gasket Door Rear	/L	1	IQJ6
	95B 839 475 B A78	Black mat			
(43)	95B 839 476	Moulding with Gasket Door Rear	/R	1	IQJ2
	95B 839 476 GV9	Galvano silver			
(43)	95B 839 476 A	Moulding with Gasket Door Rear	/R	1	IQJ4
	95B 839 476 A 041	Black			
(43)	95B 839 476 B	Moulding with Gasket Door Rear	/R	1	IQJ6
	95B 839 476 B A78	Black mat			
50	95B 853 317 B	Cover B-pillar Door Front	/L	1	
(50)	95B 853 318 B	Cover B-pillar Door Front	/R	1	
51	95B 853 351 B	Cover B-pillar Door Rear	/L	1	
(51)	95B 853 352 B	Cover B-pillar	/R	1	

Model: 95B **Model life 2014>>**

Pos	Part Number	Description	Remark	Qty	Model
		Door			
		Rear			
52	95B 853 589 B	Cover	/L	1	
		Rear			
		Door			
		Rear			
(52)	95B 853 590 B	Cover	/R	1	
		Rear			
		Door			
		Rear			
53	8K0 837 199	Clip		X	
54	WHT 002 250	Screw		X	
		5,0X15,0			
60	95B 845 453	Terminal	/L	1	
		Clamping strip			
		A-pillar			
(60)	95B 845 454	Terminal	/R	1	
		Clamping strip			
		A-pillar			
61	N 908 550 01	Blind rivet		X	
		Clamping strip			
62	95B 845 327	Cover	/L	1	
		Clamping strip			
	95B 845 327 1E0	Black			
(62)	95B 845 328	Cover	/R	1	
		Clamping strip			
	95B 845 328 1E0	Black			
63	95B 800 951	Decorative film		2	IE0W/6H6
		Gloss black			
		GTS			
(63)	95B 800 951 A	Decorative film		2	IE0W/6H1
		Black mat/satin black			
		GTS			

Illustration: 810-10

PORSCHE

Model: 95B **Model life 2014>>**

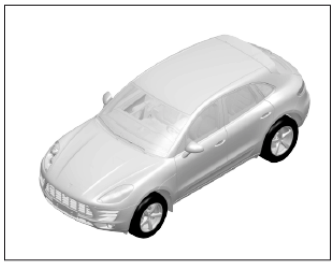

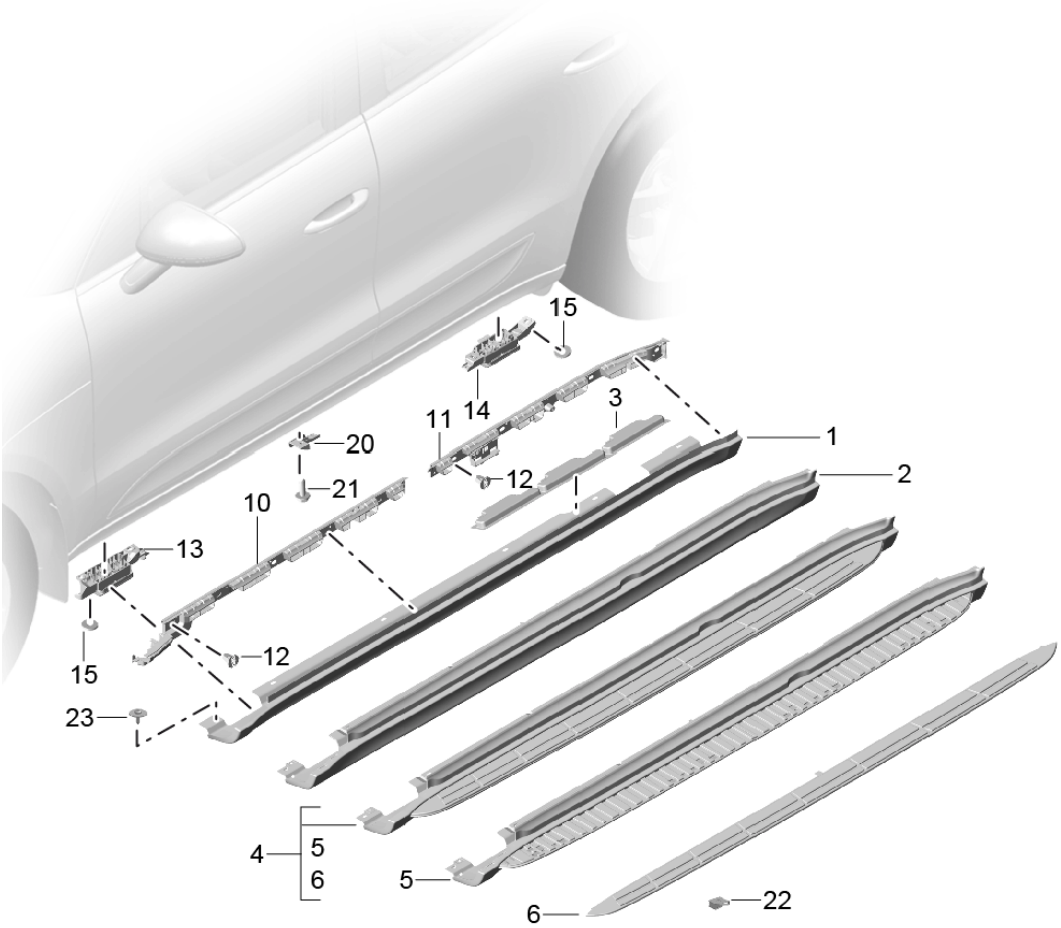

Model: 95B **Model life 2014>>**

Pos	Part Number	Description	Remark	Qty	Model
		Linings			
		Accessories			
		Door sill			
1	95B 853 563	Sill cover	/L	1	IVR0
	95B 853 563 1E0	Black			
(1)	95B 853 564	Sill cover	/R	1	IVR0
	95B 853 564 1E0	Black			
2	95B 854 883 A	Sill cover	/L	1	IVR4
	95B 854 883 A G2X	Prime coated			
(2)	95B 854 884 A	Sill cover	/R	1	IVR4
	95B 854 884 A G2X	Prime coated			
3	95B 857 993 A	Sound absorber	/RL	2	IL0R/VR0
(3)	95B 857 993	Sound absorber	/L	1	IVR4
(3)	95B 857 994	Sound absorber	/R	1	IVR4
4	95B 854 749 A	Sill cover	/L	1	IVR1
		Running board			
		Complete			
	95B 854 749 A 1E0	Black			
(4)	95B 854 750 A	Sill cover	/R	1	IVR1
		Running board			
		Complete			
	95B 854 750 A 1E0	Black			
5	95B 854 885 A	Sill cover	/L	1	IVR1
	95B 854 885 A 1E0	Black			
(5)	95B 854 886 A	Sill cover	/R	1	IVR1
	95B 854 886 A 1E0	Black			
6	95B 853 807 A	Cover	/L	1	IVR1
		Stainless steel			
(6)	95B 853 808 A	Cover	/R	1	IVR1
		Stainless steel			
10	95B 853 557 A	Bracket	/L	1	IVR0/VR4
		Front			
(10)	95B 853 558 A	Bracket	/R	1	IVR0/VR4
		Front			
(10)	95B 853 473 A	Bracket	/L	1	IVR1
		Front			
(10)	95B 853 474 A	Bracket	/R	1	IVR1
		Front			
11	95B 853 541 A	Bracket	/L	1	IVR0/VR1
		Rear			
(11)	95B 853 542 A	Bracket	/R	1	IVR0/VR1
		Rear			
12	WHT 004 935	Expander nut		10	
		5 X 15,5			
13	95B 802 845 A	Jacking point	/L	1	
		Front			
	95B 802 845 A 9B9	Black			
(13)	95B 802 846 A	Jacking point	/R	1	
		Front			
	95B 802 846 A 9B9	Black			
14	95B 802 847 A	Jacking point	/L	1	
		Rear			
	95B 802 847 A 9B9	Black			
(14)	95B 802 848 A	Jacking point	/R	1	
		Rear			
	95B 802 848 A 9B9	Black			
15	N 905 708 03	Hexagon nut		8	
		M6			
20	95B 825 352	Support	-14	1	
		Sill cover			
20	95B 825 352 B	Support	15-	1	
		Sill cover			
21	N 911 456 01	Combination screw		4	

Model: 95B **Model life 2014>>**

Pos	Part Number	Description	Remark	Qty	Model
		M8 X 28			
22	999 507 795 09	Speed nut ST4,8 POS6 POS7		X	
23	999 073 491 01	Tapping screw ST4,8 POS1 To POS6		X	
25	95B 853 819 B	Bracket Rear	/L	1	IVR1
(25)	95B 853 820 B	Bracket Rear	/R	1	IVR1

Illustration: 811-00

PORSCHE

Model: 95B **Model life 2014>>**

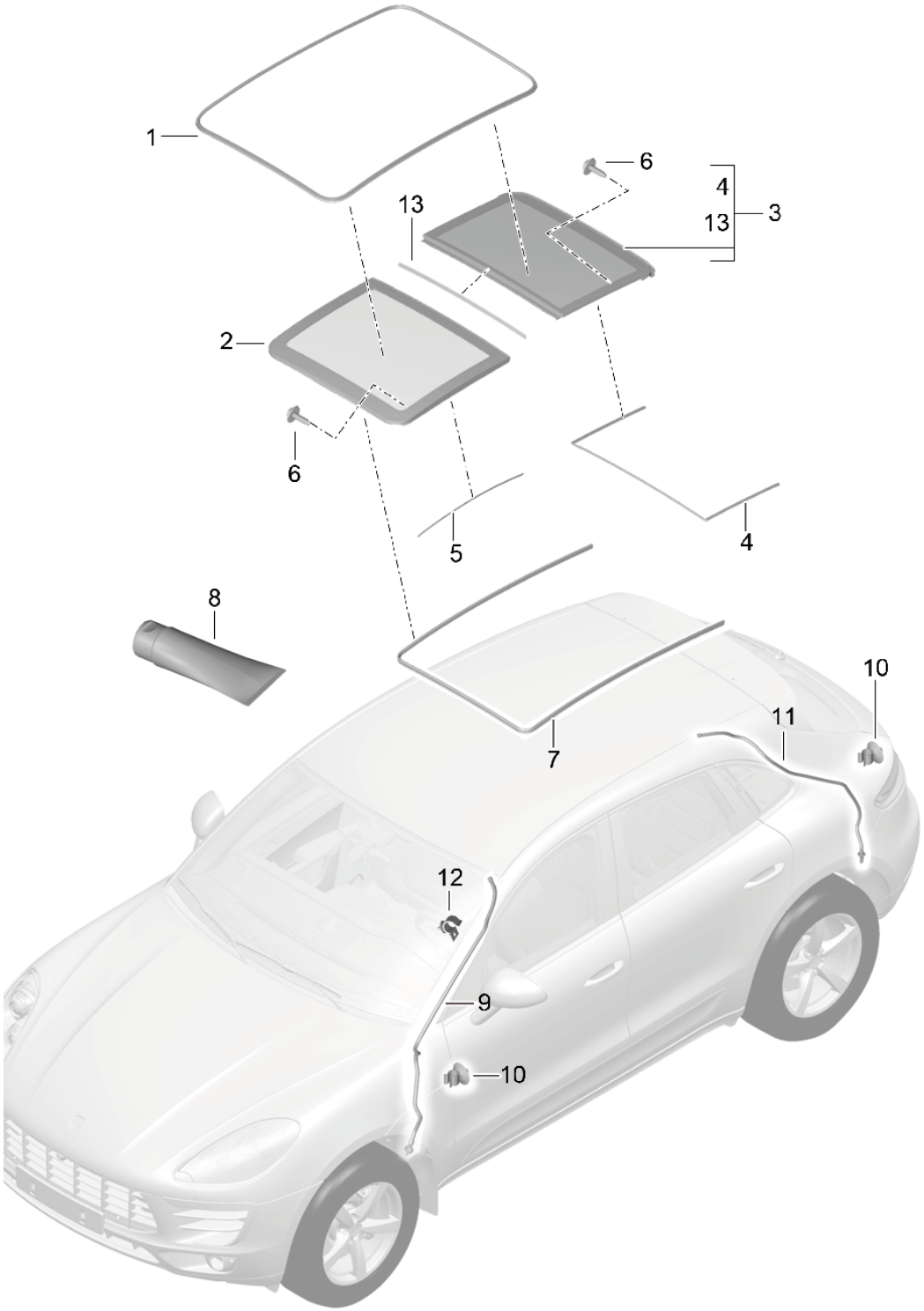

Model: 95B **Model life 2014>>**

Pos	Part Number	Description	Remark	Qty	Model
		Glass roof			I3FU
		Accessories			
		Lid			
		Water drain hose			
1	95B 877 459	Gasket		1	
		Body			
2	95B 877 055	Lid		1	
		Front			
		Glass roof			
	95B 877 055 9B9	Satin black			
3	95B 877 056	Lid		1	
		Rear			
		Glass roof			
	95B 877 056 9B9	Satin black			
4	95B 877 297	Gasket		1	
		for			
		Lid			
		Rear			
5	958 562 791 00	Interior lining		2	
	958 562 791 00 9B9	Satin black			
6	95B 898 011	Set		1	
		Fastening screw			
		Lid			
7	95B 877 439	Gasket		1	
		Inner			
8	958 562 900 01	Grease		1	
		150 ML			
		1 tube			
9	95B 877 201	Water drain hose		1	
		Front			
		Left			
(9)	95B 877 202	Water drain hose		1	
		Front			
		Right			
10	958 564 244 00	Hose holder		X	
11	95B 877 203	Water drain hose		1	
		Rear			
		Left			
(11)	95B 877 204	Water drain hose		1	
		Rear			
		Right			
12	970 564 701 00	Hose holder		1	
		Front			
		Right			
13	95B 877 913	Gasket		1	
		Front			
		for			
		Lid			
		Rear			

Illustration: 811-05

PORSCHE

Model: 95B **Model life 2014>>**

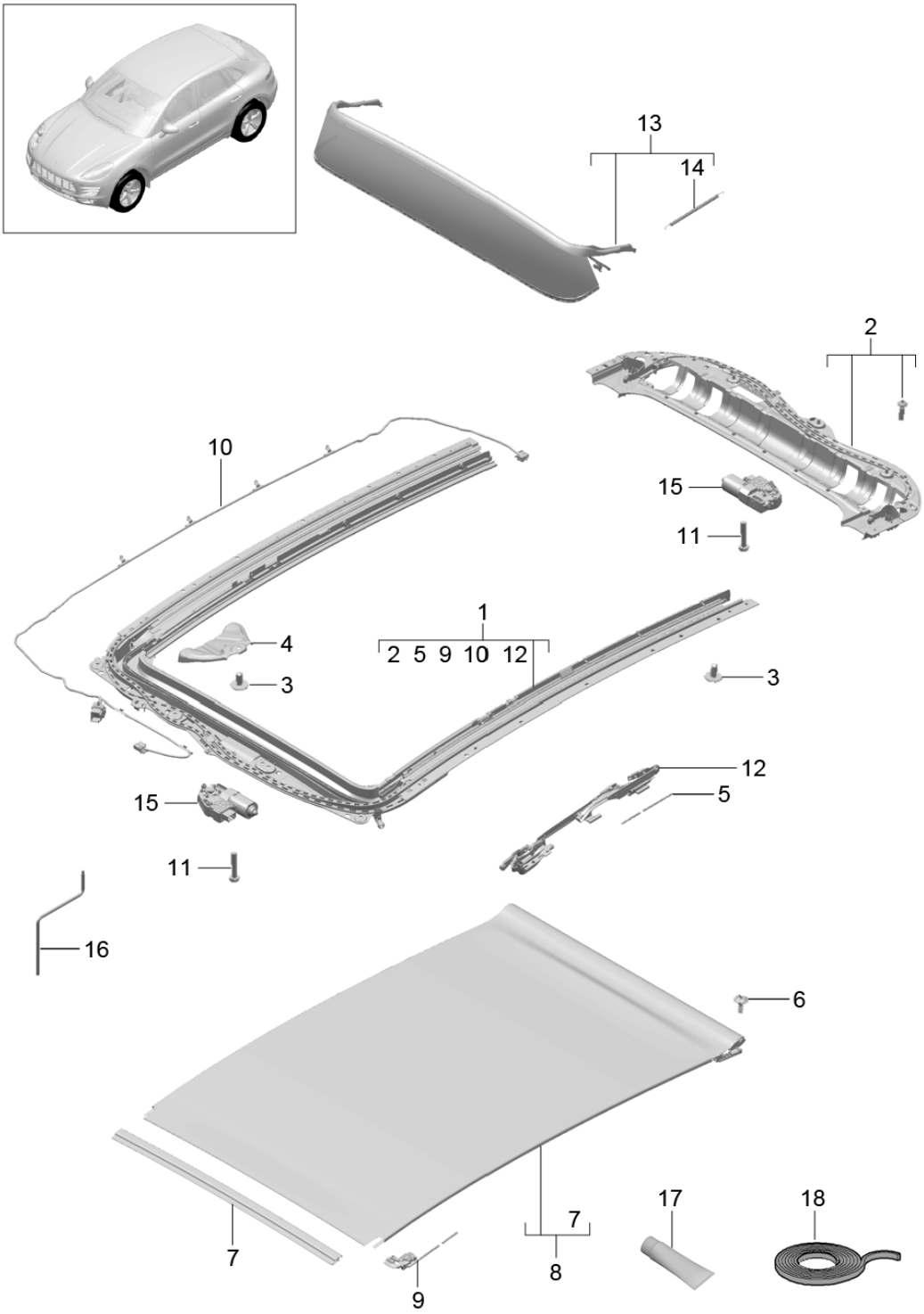

Model: 95B **Model life 2014>>**

Pos	Part Number	Description	Remark	Qty	Model
		Glass roof			I3FU
		Frame			
		Accessories			
1	95B 877 941	Frame		1	
2	95B 898 025	Repair kit		1	
		Frame			
		Part			
		Rear			
		Use also:			
		Sealing cord			
		000.043.172.00			
3	N 911 664 01	Oval-head screw		X	
		M6X14			
4	95B 817 294	Bracket		1	
		Right			
(4)	95B 817 293	Bracket		1	
		Left			
5	95B 898 021	Set		1	
		Cable			
		Lid			
6	95B 898 026	Set		1	
		Fastening screw			
		Shade			
7	95B 898 028	Repair kit		1	
		Roof strut			
8	95B 877 307	Shade		1	
	95B 877 307 ZR5	Saddle Tan			+VN,+VP
	95B 877 307 OG9	Agate Grey			+VD,+VG,+VL,
					+VQ
	95B 877 307 0A3	Black			+VC,+VJ,+VF,
					+VI,+VU,+VK,
					+VO,+VX,+VZ
	95B 877 307 0B4	Luxor Beige			+VE,+VH,+VM
	95B 877 307 0E7	Espresso			+VR
9	95B 898 014	Set		1	
		Cable			
		Shade			
10	95B 971 648	Wiring harness		1	
		Glass roof			
11	8K9 898 057 B	Set of fastening parts		1	
		Screw		6	
		M5X28			
		for			
		Engine			
		Front and rear			
		Including			
		Clamp		2	
		Insert		2	
12	95B 898 010	Set		1	
		Hinge			
		for			
		Glass roof			
13	95B 877 651	Air deflector		1	
		Black			
14	95B 898 012	Parts kit		1	
		Air deflector			
15	95B 959 591	Engine		2	
16	955 564 036 00	Tool		1	
		Emergency operation			
17	958 562 900 01	Grease		1	
		150 ML			
		1 tube			
18	000 043 172 00	Sealing cord		1	

Model: 95B **Model life 2014>>**

Pos	Part Number	Description	Remark	Qty	Model
		Roller for Seal Frame Rear			

Illustration: 812-00

PORSCHE

Model: 95B **Model life 2014>>**

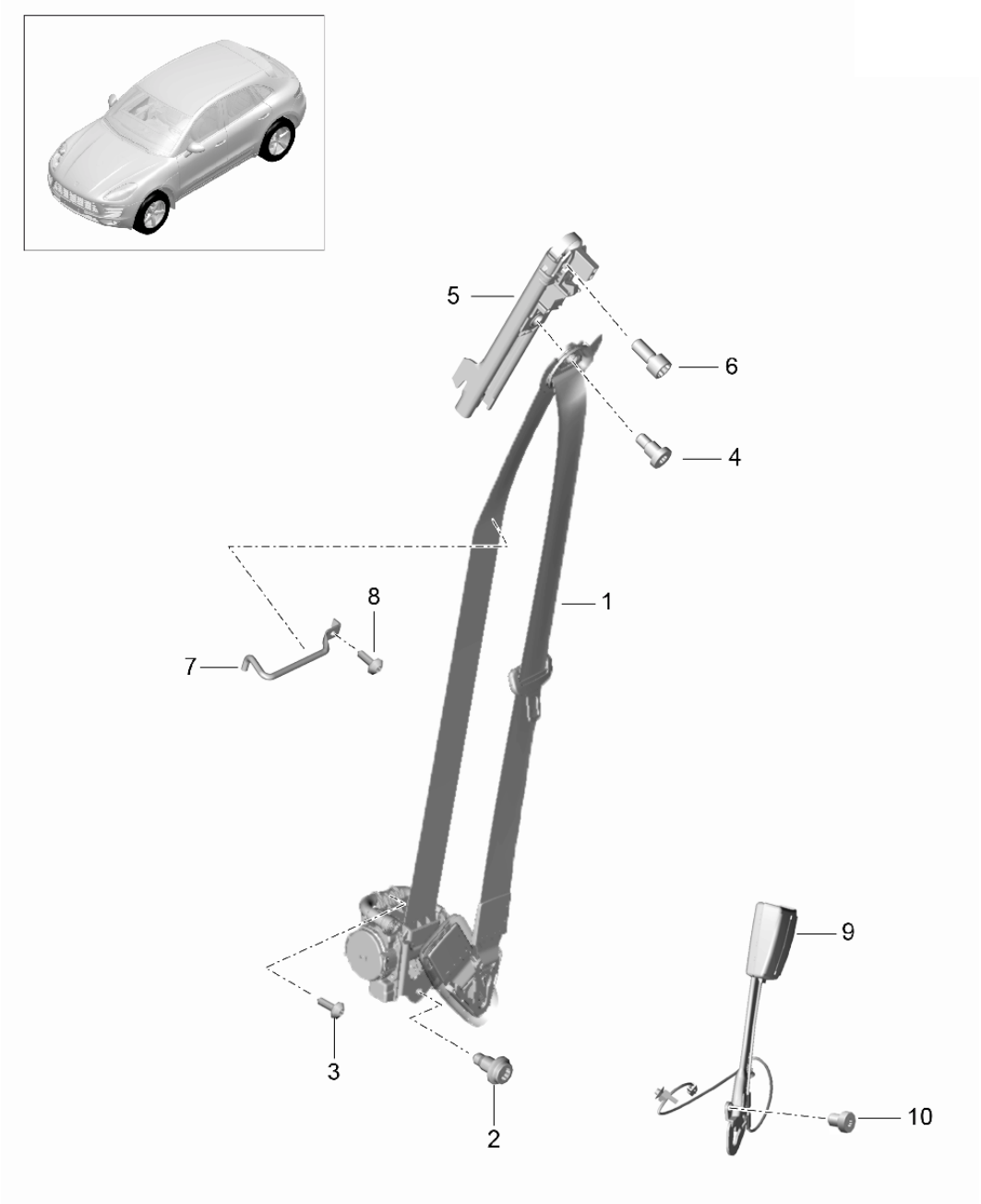

Model: 95B **Model life 2014>>**

Pos	Part Number	Description	Remark	Qty	Model
		Seat belt			
		Seat-belt buckle			
		Front			
1	95B 857 706 C	Seat belt		1	IL0L/3QT
		Right			
	95B 857 706 C HCP	Black			
	95B 857 706 C OR1	Agate Grey			
	95B 857 706 C OP2	Saddle Tan			
	95B 857 706 C OA5	Carrera Red			
	95B 857 706 C OC7	Espresso			
	95B 857 706 C OB6	Pebble Grey			
	95B 857 706 C 62S	Luxor Beige			
	95B 857 706 C M3C	Carmine red			
	95B 857 706 C M7U	Rhodium Silver Metallic			
(1)	95B 857 705	Seat belt		1	IL0L/3QT
		Left			
	95B 857 705 HCP	Black			
	95B 857 705 OR1	Agate Grey			
	95B 857 705 OP2	Saddle Tan			
	95B 857 705 OA5	Carrera Red			
	95B 857 705 OC7	Espresso			
	95B 857 705 OB6	Pebble Grey			
	95B 857 705 62S	Luxor Beige			
	95B 857 705 M3C	Carmine red			
	95B 857 705 M7U	Rhodium Silver Metallic			
(1)	95B 857 706 B	Seat belt		1	IL0R/3QT
		Right			
	95B 857 706 B HCP	Black			
	95B 857 706 B OR1	Agate Grey			
	95B 857 706 B OP2	Saddle Tan			
	95B 857 706 B OA5	Carrera Red			
	95B 857 706 B OC7	Espresso			
	95B 857 706 B OB6	Pebble Grey			
	95B 857 706 B 62S	Luxor Beige			
	95B 857 706 B M3C	Carmine red			
	95B 857 706 B M7U	Rhodium Silver Metallic			
(1)	95B 857 705 C	Seat belt		1	IL0R/3QT
		Left			
	95B 857 705 C HCP	Black			
	95B 857 705 C OR1	Agate Grey			
	95B 857 705 C OP2	Saddle Tan			
	95B 857 705 C OA5	Carrera Red			
	95B 857 705 C OC7	Espresso			
	95B 857 705 C OB6	Pebble Grey			
	95B 857 705 C 62S	Luxor Beige			
	95B 857 705 C M3C	Carmine red			
	95B 857 705 C M7U	Rhodium Silver Metallic			
2	N 989 260 01	Fastening screw		2	
4	N 989 243 03	Fastening screw		2	
		Seat belt			
		Upper			
5	958 803 819 00	Mounting		2	
		Height adjustment			
		Belt			
6	N 105 724 01	Fastening screw		2	
		Height adjustment			
7	95B 857 817	Clip		2	
8	N 910 742 01	Fastening screw		1	
		M5X18			
9	958 803 755 00	Seat-belt buckle		2	
	958 803 755 00 YLZ	Satin black			
10	N 989 237 01	Fastening screw		2	
		Seat-belt buckle			

Illustration: 812-05

PORSCHE

Model: 95B **Model life 2014>>**

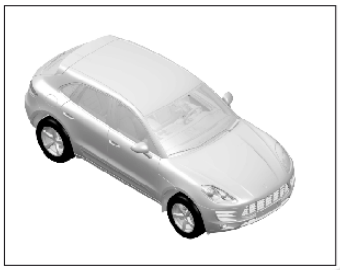

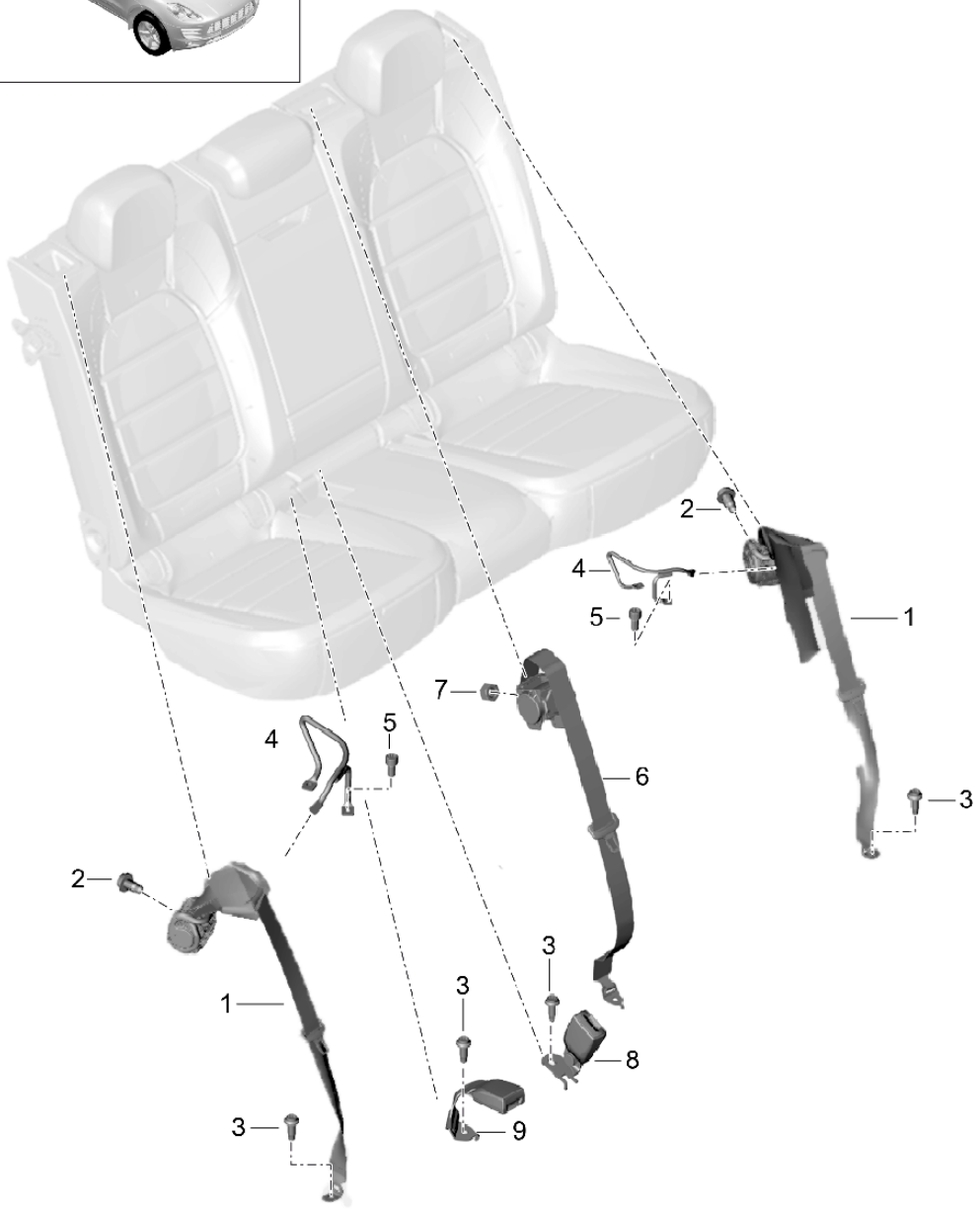

Model: 95B **Model life 2014>>**

Pos	Part Number	Description	Remark	Qty	Model
		Seat belt			
		Seat-belt buckle			
		Rear			
1	95B 857 805 B	Seat belt		2	I3ZU
	95B 857 805 B HCP	Black			
	95B 857 805 B OR1	Agate Grey			
	95B 857 805 B OP2	Saddle Tan			
	95B 857 805 B OA5	Carrera Red			
	95B 857 805 B OC7	Espresso			
	95B 857 805 B OB6	Pebble Grey			
	95B 857 805 B 62S	Luxor Beige			
	95B 857 805 B M3C	Carmine red			
	95B 857 805 B M7U	Rhodium Silver Metallic			
2	N 989 260 01	Fastening screw		2	
3	N 912 098 01	Fastening screw		X	
		for			
		Belt			
		Lower			
4	95B 857 791	Clip		1	
		Left			
(4)	95B 857 792	Clip		1	
		Right			
5	N 105 724 01	Fastening screw		6	
		Clip			
5		Fastening screw		6	
		Clip			
6	95B 857 807	Seat belt		1	I3QT
		Centre			
	95B 857 807 HCP	Black			
	95B 857 807 OR1	Agate Grey			
	95B 857 807 OP2	Saddle Tan			
	95B 857 807 OA5	Carrera Red			
	95B 857 807 OC7	Espresso			
	95B 857 807 OB6	Pebble Grey			
	95B 857 807 62S	Luxor Beige			
7	N 989 910 01	Hexagon nut		1	
8	95B 857 753	Seat-belt buckle		1	I9P3/9P7
		Left			
	95B 857 753 YLZ	Satin black			
(8)	95B 857 753 A	Seat-belt buckle		1	I9P6
		Left			
	95B 857 753 A YLZ	Satin black			
(8)	95B 857 754	Seat-belt buckle		1	I9P3/9P7
		Right			
	95B 857 754 YLZ	Satin black			
(8)	95B 857 754 A	Seat-belt buckle		1	I9P6
		Right			
	95B 857 754 A YLZ	Satin black			
9	95B 857 740	Seat-belt buckle		1	I9P3/9P7
		Centre			
	95B 857 740 YLZ	Satin black			
(9)	95B 857 740 A	Seat-belt buckle		1	I9P6
		Centre			
	95B 857 740 A YLZ	Satin black			

Illustration: 812-50

PORSCHE

Model: 95B **Model life 2014>>**

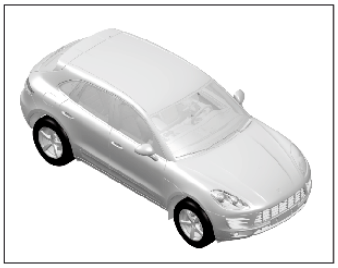

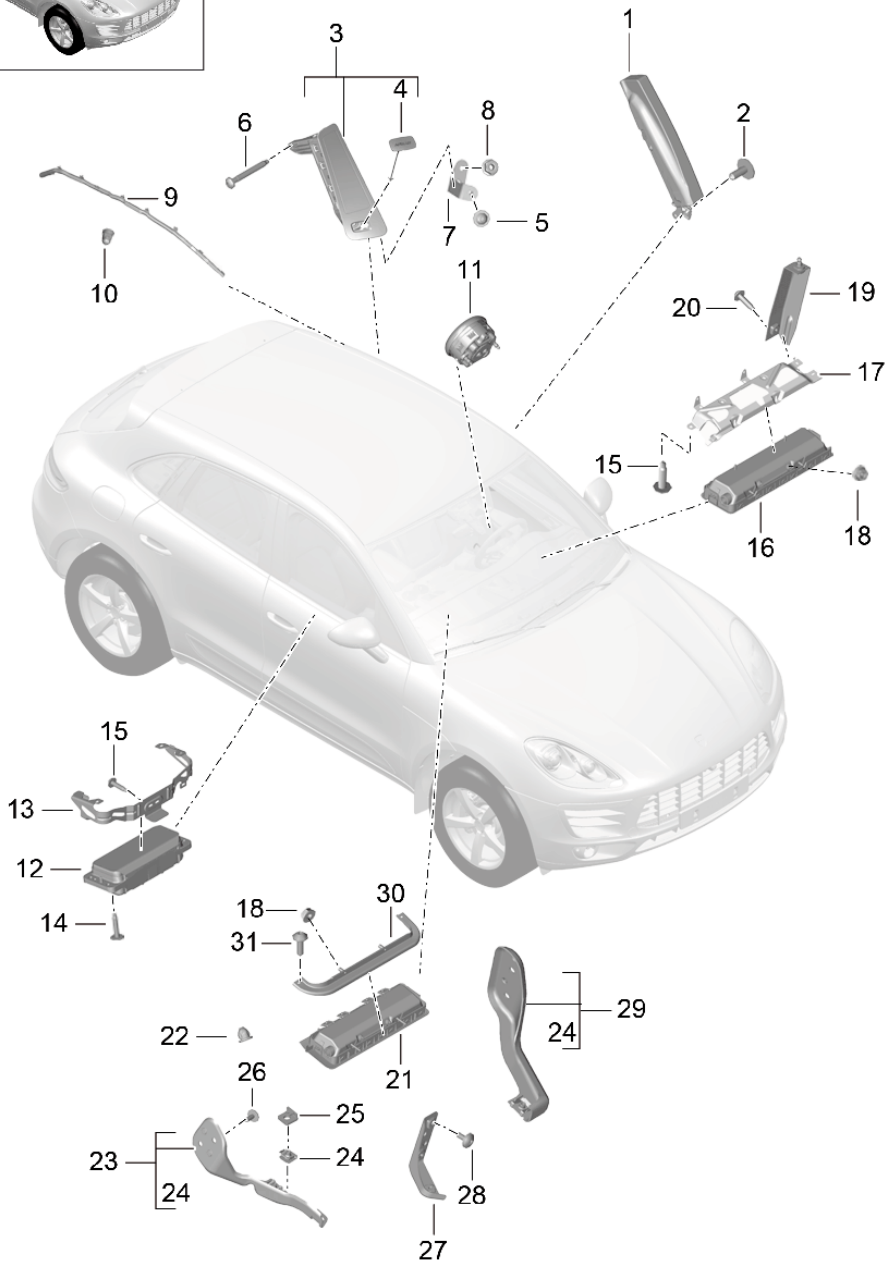

Model: 95B **Model life 2014>>**

Pos	Part Number	Description	Remark	Qty	Model
		Airbag			
1	95B 880 241	Side airbag	/L	1	I4X3/4X4
		Front			
(1)	95B 880 242	Side airbag	/R	1	I4X3/4X4
		Front			
2	N 910 423 02	Lens-head screw		2	
		M6X16			
3	95B 880 441	Side airbag	/L	1	I4X4
		Rear			
	95B 880 441 5Q0	Black			+VC,+VJ,+VF,
					+VI,+VU,+VK,
					+VO,+VX,+VZ
	95B 880 441 OA6	Agate Grey			+VD,+VG,+VL
	95B 880 441 6W0	Luxor Beige			+VE,+VH,+VM
					+VP
	95B 880 441 OL7	Saddle Tan			+VN
	95B 880 441 OD9	Pebble Grey			+VQ
	95B 880 441 3T0	Espresso			+VR
(3)	95B 880 442	Side airbag	/R	1	I4X4
		Rear			
	95B 880 442 5Q0	Black			+VC,+VJ,+VF,
					+VI,+VU,+VK,
					+VO,+VX,+VZ
	95B 880 442 OA6	Agate Grey			+VD,+VG,+VL
	95B 880 442 6W0	Luxor Beige			+VE,+VH,+VM
					+VP
	95B 880 442 OL7	Saddle Tan			+VN
	95B 880 442 OD9	Pebble Grey			+VQ
	95B 880 442 3T0	Espresso			+VR
4	95B 853 437	Sticker	/L	1	I4X4
		Airbag			
	95B 853 437 5Q0	Black			+VC,+VJ,+VF,
					+VI,+VU,+VK,
					+VO,+VX,+VZ
	95B 853 437 OA6	Agate Grey			+VD,+VG,+VL,
	95B 853 437 6W0	Luxor Beige			+VE,+VH,+VM
					+VP
	95B 853 437 OL7	Saddle Tan			+VN
	95B 853 437 OD9	Pebble Grey			+VQ
	95B 853 437 3T0	Espresso			+VR
(4)	95B 853 438	Sticker	/R	1	I4X4
		Airbag			
	95B 853 438 5Q0	Black			+VC,+VJ,+VF,
					+VI,+VU,+VK,
					+VO,+VX,+VZ
	95B 853 438 OA6	Agate Grey			+VD,+VG,+VL,
	95B 853 438 6W0	Luxor Beige			+VE,+VH,+VM
					+VP
	95B 853 438 OL7	Saddle Tan			+VN
	95B 853 438 OD9	Pebble Grey			+VQ
	95B 853 438 3T0	Espresso			+VR
5	N 909 101 02	Hexagon socket head bolt		2	
		M5X18			
6	N 106 230 01	Screw		2	
		M5X40			
7	8R0 880 273 A	Support	/L	1	I4X4
		Airbag			
		Rear			
(7)	8R0 880 274 A	Support	/R	1	I4X4
		Airbag			
		Rear			
8	N 015 082 10	Hexagon nut		4	
		M6			

Model: 95B **Model life 2014>>**

Pos	Part Number	Description	Remark	Qty	Model
9	95B 880 741	Head airbag	/L	1	
(9)	95B 880 742	Head airbag	/R	1	
10	955 618 419 21	Cap nut M6		4	
11	95B 880 201 F	Airbag unit Driver's side Leatherette		1	I1A2/4N1/4N2
	95B 880 201 F 5Q0	Black			+VC,+VJ,+VF, +VI,+VU,+VX +VZ
	95B 880 201 F OA6	Agate Grey			+VD,+VG
	95B 880 201 F 6W0	Luxor Beige			+VE,+VH
(11)	95B 880 201 G	Airbag unit Driver's side Leather		1	I1A2/4N3/4N5 I4N8
	95B 880 201 G A34	Black			+VK,+VO
	95B 880 201 G OE5	Agate Grey			+VL,+VQ
	95B 880 201 G 9J9	Luxor Beige			+VM
	95B 880 201 G OK6	Saddle Tan			+VP,+VN
	95B 880 201 G 6H6	Espresso			+VR
(11)	95B 880 201 H	Airbag unit Driver's side Leatherette		1	I0F5/4N1/4N2
	95B 880 201 H 5Q0	Black			+VC,+VJ,+VF, +VI,+VU,+VX +VZ
	95B 880 201 H OA6	Agate Grey			+VD,+VG
	95B 880 201 H 6W0	Luxor Beige			+VE,+VH
(11)	95B 880 201 J	Airbag unit Driver's side Leather		1	I0F5/4N3/4N5 I4N8
	95B 880 201 J A34	Black			+VK,+VO
	95B 880 201 J OE5	Agate Grey			+VL,+VQ
	95B 880 201 J 9J9	Luxor Beige			+VM
	95B 880 201 J OK6	Saddle Tan			+VP,+VN
	95B 880 201 J 6H6	Espresso			+VR
12	95B 880 204	Airbag unit Passenger's side		1	
13	95B 880 571	Support Airbag unit Passenger's side		1	
14	N 910 935 02	Round head screw M6X30		4	
15	N 106 847 01	Oval-head screw M5X20		X	
26	N 910 423 02	Lens-head screw M6X16		X	
29	8R1 863 442 B	Fastening angle		1	IL0L
(29)	8R2 863 441 A	Fastening angle		1	IL0R

Illustration: 813-00

Model: 95B **Model life 2014>>**

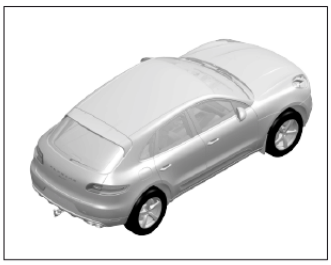

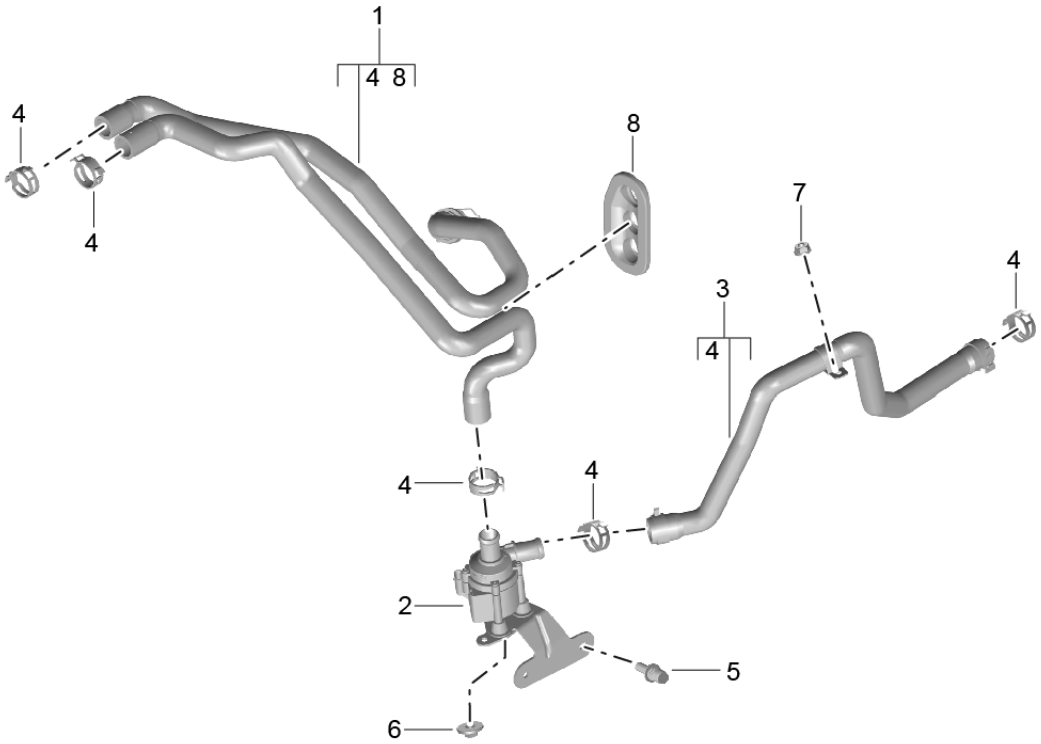

Model: 95B **Model life 2014>>**

Pos	Part Number	Description	Remark	Qty	Model
		Hot air line			V6 TDI IDD7/D1V/D43 ID51
		Supply Return line Basic			
1	8R0 819 350 BB	Heater hose Set		1	I7E6/9MO
2	8R0 819 025 J	Water pump with Support		1	I9MO
3	8R0 819 376 T	Heater hose		1	I7E6/9MO
4	999 512 658 09	Hose clamp B27X12		5	
5	N 105 854 01	Blind rivet Screw M6X16,5		2	
6	N 905 708 02	Hexagon nut M6		2	
7	N 015 082 10	Hexagon nut M6		1	
8	8K0 819 345 E	Grommet Heater hose		1	

Illustration: 813-05

PORSCHE

Model: 95B **Model life 2014>>**

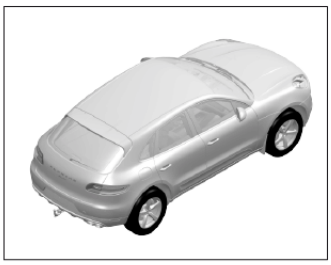

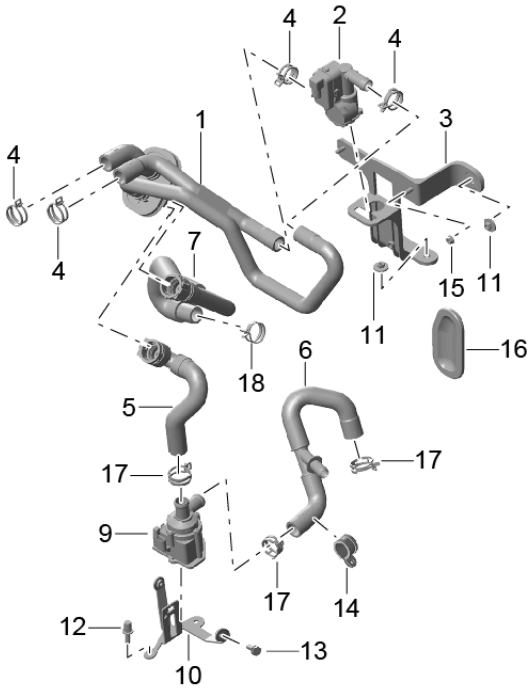

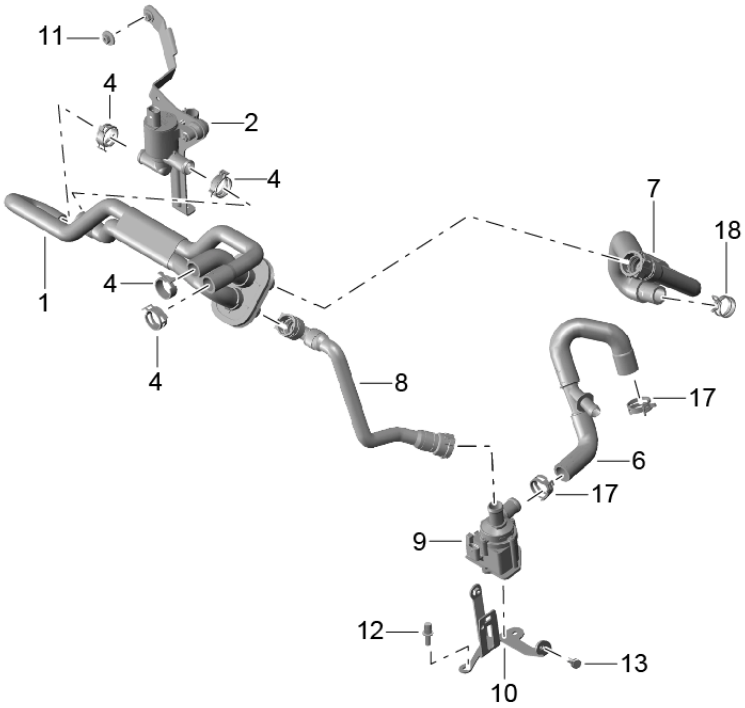

Model: 95B **Model life 2014>>**

Pos	Part Number	Description	Remark	Qty	Model
		Hot air line			V6 BT IDU0/DU1
		Supply Return line Basic			
1	95B 819 337	Heater hose Set	/LL	1	IL0L/9MO
(1)	8R2 819 350 F	Heater hose Set	/RL	1	IL0R/9MO
2	958 572 810 00	Shut-off valve When required order also: POS 3	/LL	1	IL0L/9M0
(2)	8R2 819 133 D	Shut-off valve with Support	/RL	1	IL0R/9M0
(2)	8R2 819 133 E	Shut-off valve with Support	/RL	1	IL0R/9M0
3	95B 819 735	Support Plastic material	/LL	1	IL0L/9MO
4	95B 819 371	Heater hose		1	
5	95B 819 334	Heater hose Return line Water pump		1	IDU0/DU1/7E0 I9M0
6	95B 819 350 A	Heater hose Return line Water pump Engine		1	IDU0/DU1/7E0 I9M0
7	95B 819 332 A	Heater hose Supply		1	IDU0/DU1
9	8K0 819 025 AB	Water pump		1	I9MO
10	95B 121 305 B	Support Pump		1	IDU0/DU1
11	N 905 708 02	Hexagon nut M6		3	
12	8R0 122 291	Adapter		1	
13	N 100 829 08	Combination screw M6X16-S1-N		1	
14	N 107 752 01	Hose clamp D1-23X15		2	
15	N 015 082 10	Hexagon nut M6		2	
16	8K0 819 345 G	Grommet		1	I9M0
17	N 906 870 01	Hose clamp B27X12		2	
18	999 512 589 09	Hose clamp A25X12		2	
19	999 512 604 09	Hose clamp A27X12		2	
20	999 512 606 09	Hose clamp A29X12		2	

Illustration: 813-06

PORSCHE

Model: 95B **Model life 2014>>**

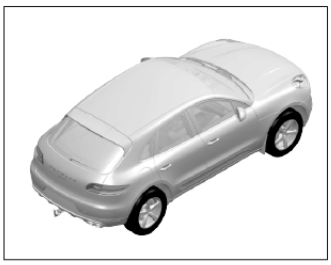

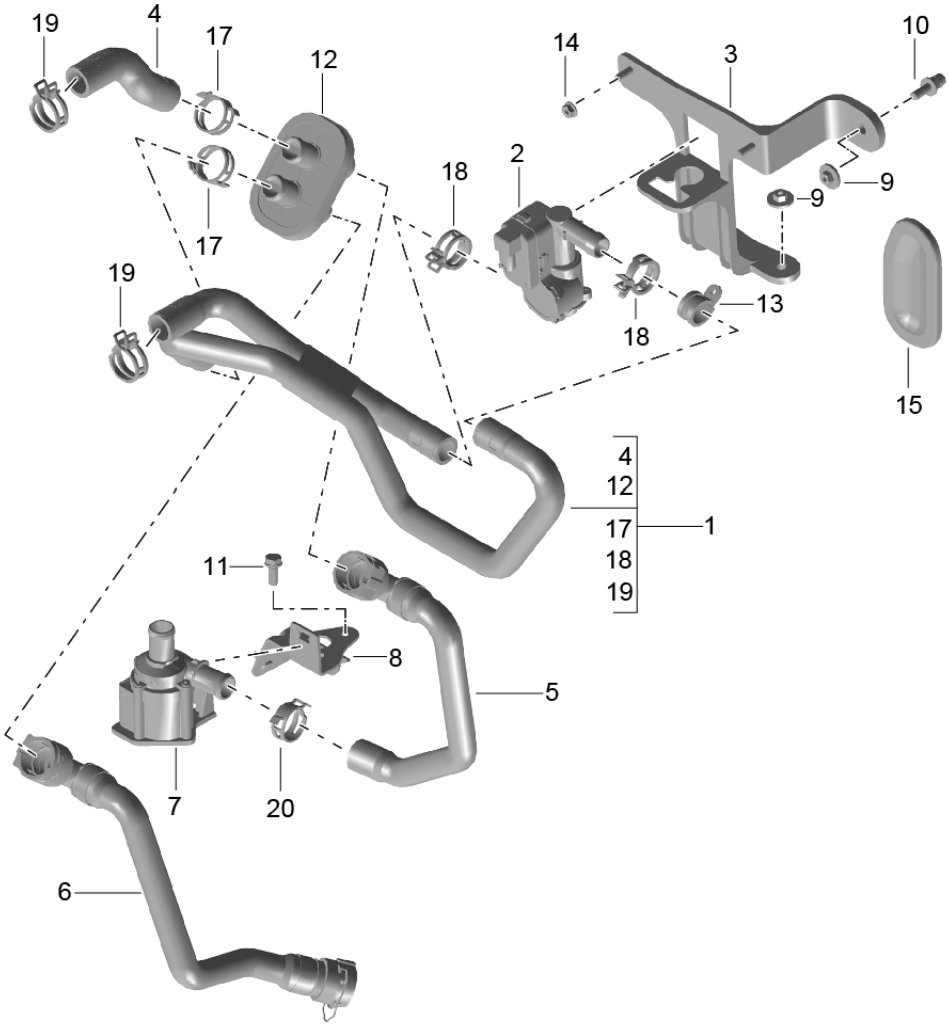

Model: 95B **Model life 2014>>**

Pos	Part Number	Description	Remark	Qty	Model
		Hot air line			R4 TFSI IDM0
		Supply Return line Basic			
1	95B 819 337	Heater hose Set	/LL	1	IL0L/9MO
(1)	8R2 819 350 F	Heater hose Set	/RL	1	IL0R/9MO
2	958 572 810 00	Shut-off valve When required order also: POS 3	/LL	1	IL0L/9M0
(2)	8R2 819 133 D	Shut-off valve with Support	/RL	1	IL0R/9M0
3	95B 819 735	Support Plastic material	/LL	1	IL0L/9MO
4	95B 819 371	Heater hose		1	
5	8R0 819 332 G	Heater hose Supply Water pump		1	IDM0/7E0/9M0
6	8R0 819 334 AC	Heater hose Return line		1	IDM0
7	8K0 819 025 AB	Water pump		1	I9MO
8	8K0 971 502 AN	Support Pump		1	IDM0
9	N 905 708 02	Hexagon nut M6		3	
10	N 105 854 01	Blind rivet Screw M6X16,5		2	
11	N 100 829 08	Combination screw M6X16-S1-N		1	
12	8R0 122 291	Adapter		1	
13	N 107 752 01	Hose clamp D1-23X15		2	
14	N 015 082 10	Hexagon nut M6		2	
15	8K0 819 345 G	Grommet		1	I9M0
17	N 906 870 01	Hose clamp B27X12		2	
18	999 512 589 09	Hose clamp A25X12		2	
19	999 512 604 09	Hose clamp A27X12		2	
20	999 512 606 09	Hose clamp A29X12		2	

Illustration: 813-10

PORSCHE

Model: 95B **Model life 2014>>**

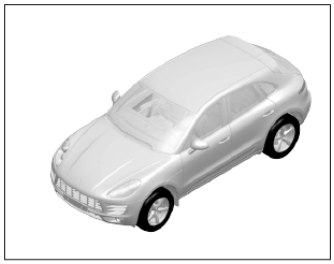

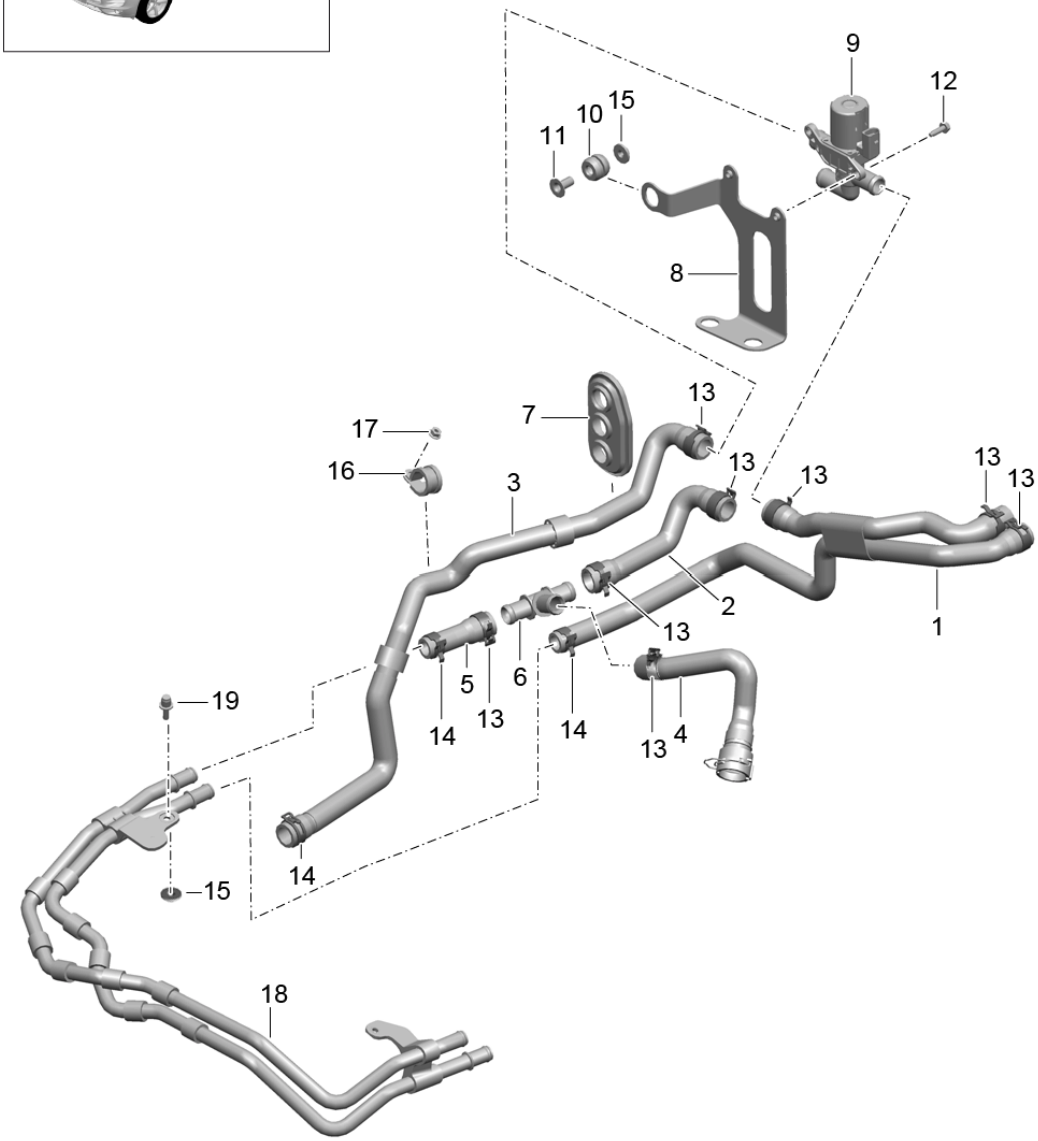

Model: 95B **Model life 2014>>**

Pos	Part Number	Description	Remark	Qty	Model
		Hot air line			V6 TDI IDD7/D1V/D43 ID51
		with Auxiliary heater Diesel			
1	8R0 265 348 Q	Heater hose		1	I9M1/9M9
2	8R0 265 385 G	Heater hose		1	I9M1/9M9
3	8R0 265 370 AB	Heater hose Return line		1	I9M1/9M9
4	8R0 265 344 J	Heater hose		1	I9M1/9M9
5	8R0 265 354 C	Heater hose		1	I9M1/9M9
6	N 907 606 01	T-socket		1	I9M1/9M9
7	8K0 819 345 E	Grommet		1	
8	8R0 261 153 A	Support Solenoid valve		1	
9	955 572 824 05	Valve Auxiliary heater		1	
10	4D0 614 177 A	Buffer		3	
11	4D0 614 173 B	Bearing sleeve		3	
12	N 106 533 01	Hexagon-head bolt M6X20		2	
13	N 906 870 01	Hose clamp B27X12		7	
14	N 906 869 04	Hose clamp B23X12		2	
15	N 905 708 02	Hexagon nut M6		3	
16	N 107 752 01	Hose clamp D1-23X15		1	
17	N 015 082 10	Hexagon nut M6		3	
18	95B 265 235 C	Heater pipeline		1	I9M1/9M9
19	N 908 127 02	Blind rivet Screw M6X18		1	

Illustration: 813-15

PORSCHE

Model: 95B **Model life 2014>>**

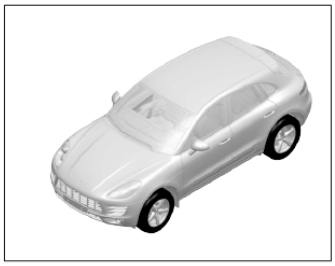

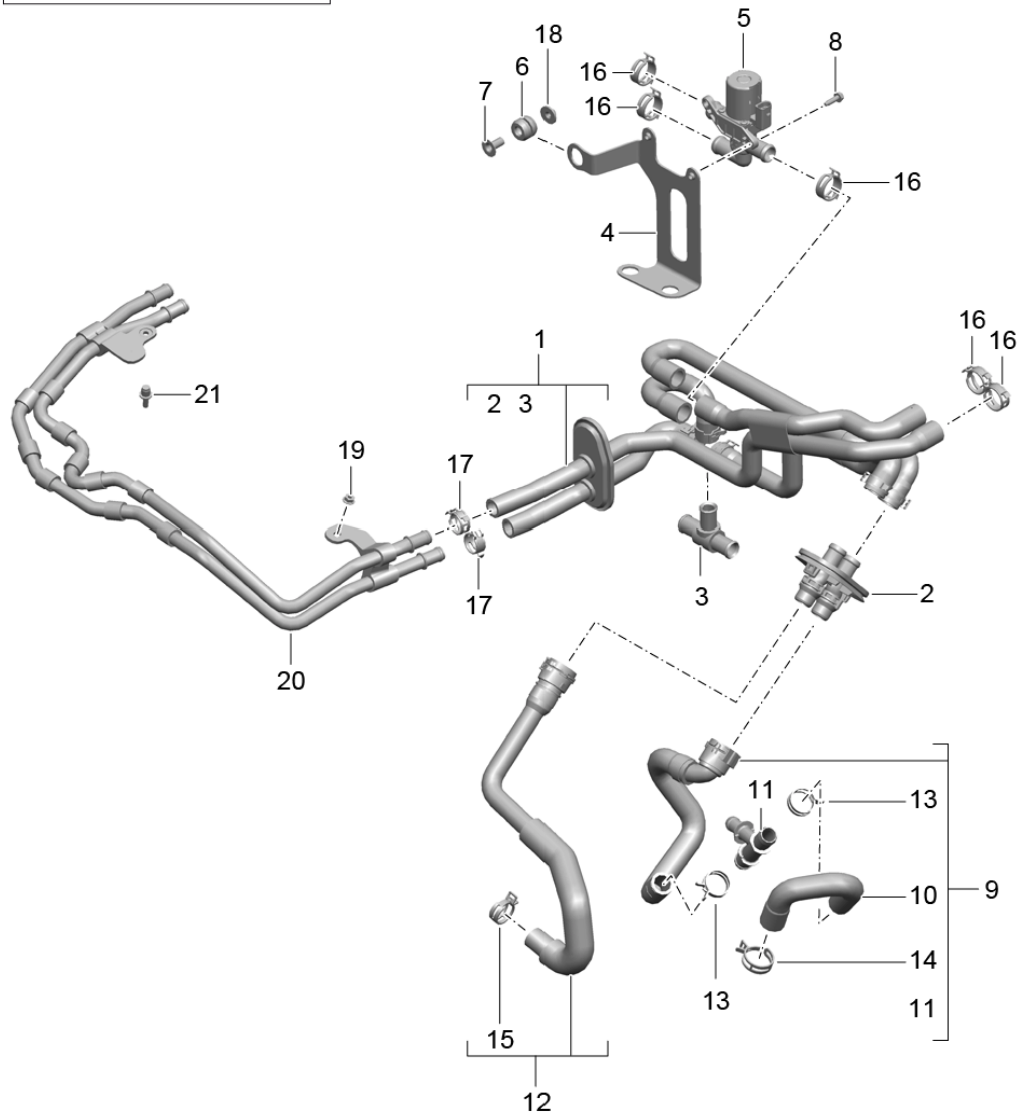

Model: 95B **Model life 2014>>**

Pos	Part Number	Description	Remark	Qty	Model
		Hot air line			V6 BT IDU0/DU1/D4A
		with Auxiliary heater Petrol			
1	8R0 265 347 Q	Heater hose		1	I9M1/9M9
2	8R0 122 291	Adapter		1	
3	N 907 606 01	T-socket		1	I9M1/9M9
4	8R0 261 153 A	Support Solenoid valve		1	
5	955 572 824 05	Valve Auxiliary heater		1	
6	4D0 614 177 A	Buffer		3	
7	4D0 614 173 B	Bearing sleeve		3	
8	N 106 533 01	Hexagon-head bolt M6X20		2	
9	95B 265 344 A	Heater hose Return line		1	I9M1/9M9
10	95B 819 376 A	Heater hose Return line		1	I9M1/9M9
11	7PP 121 237	Connecting piece		1	
12	95B 819 332 A	Heater hose Supply		1	I9M1/9M9
13	999 512 604 09	Hose clamp A27X12		2	
14	999 512 606 09	Hose clamp A29X12		2	
15	999 512 589 09	Hose clamp A25X12		1	
16	N 906 870 01	Hose clamp B27X12		5	
17	N 906 869 04	Hose clamp B23X12		2	
18	N 905 708 02	Hexagon nut M6		3	
19	N 015 082 10	Hexagon nut M6		2	
20	95B 265 235 B	Water tube		1	
21	N 908 127 02	Blind rivet Screw M6X18		1	

Illustration: 813-20

PORSCHE

Model: 95B **Model life 2014>>**

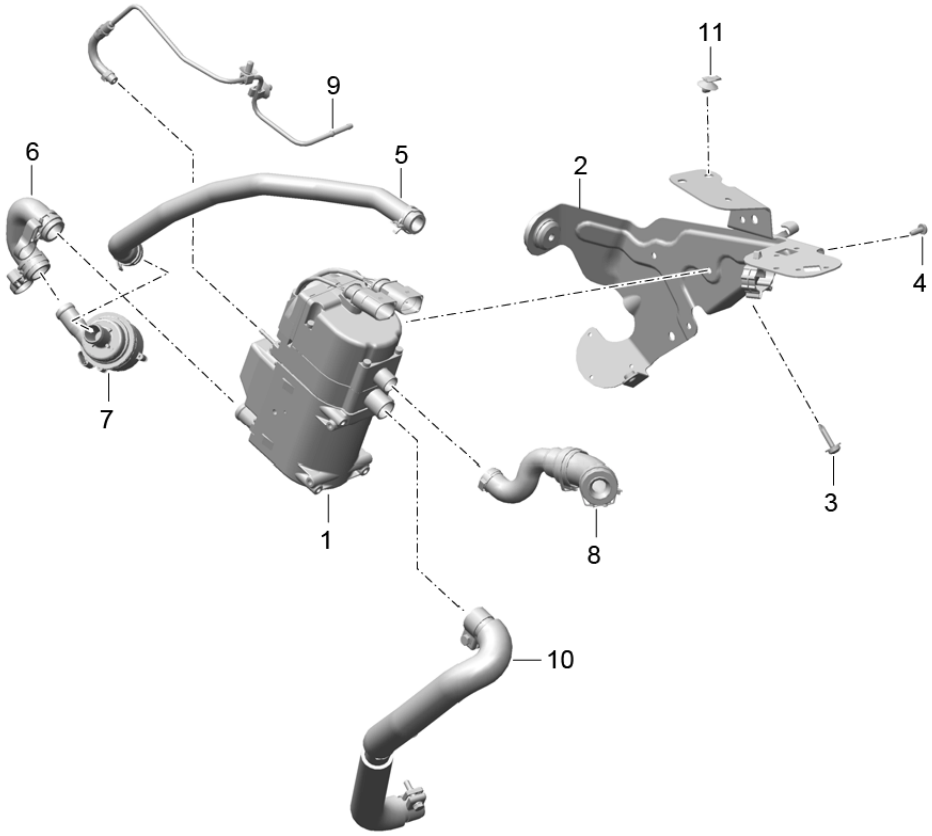

Model: 95B **Model life 2014>>**

Pos	Part Number	Description	Remark	Qty	Model
		Auxiliary heater			
		Accessories			
1	95B 265 105	Auxiliary heater		1	
		Petrol			
(1)	95B 265 105 A	Auxiliary heater		1	
		Diesel			
2	95B 298 651	Repair kit		1	
		Support			
		Auxiliary heater			
		with			
		Bearing sleeve			
		Screw			
		Clip			
3	999 073 467 01	Combination screw		2	
		M6X30-DIS			
4	N 106 549 02	Round head screw		1	
		M6GFX16			
5	95B 298 653	Repair kit		1	
		Water hose			
		Large			
		with			
		Clip			
		Screw			
		Line clamp			
6	95B 265 354	Heater hose		1	I9M1/9M9
		Small			
7	95B 298 861	Repair kit		1	
		Water pump			
		with			
		Screw			
8	95B 298 805	Repair kit		1	
		Air intake			
		Muffler			
9	95B 298 681	Repair kit		1	
		Fuel line			
		with			
		Line bracket			
		Pipe clamp			
10	95B 298 844	Repair kit		1	
		Exhaust pipe			
11	958 572 830 00	Clip		1	
		Mount			
		Cable plug			

Illustration: 813-25

PORSCHE

Model: 95B **Model life 2014>>**

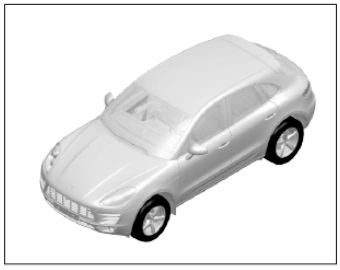

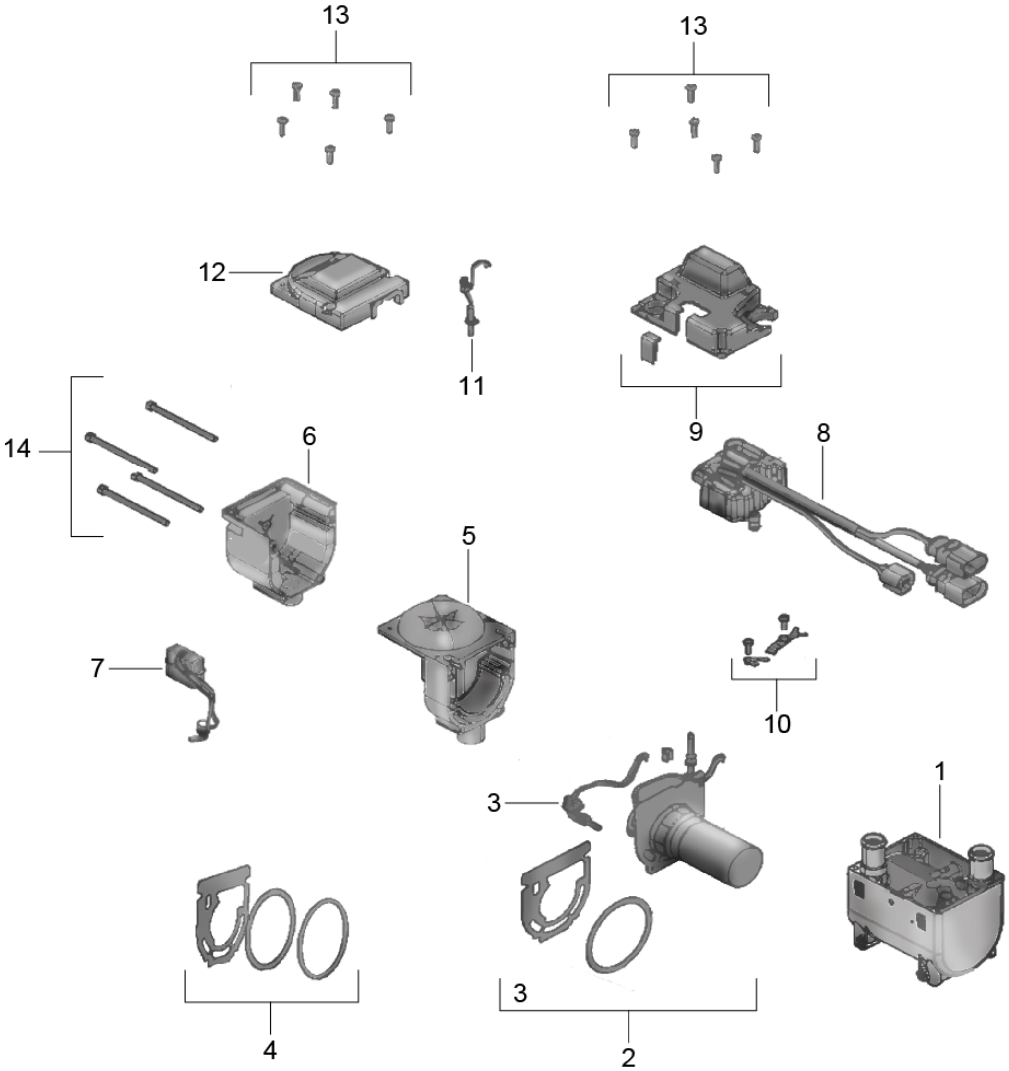

Model: 95B **Model life 2014>>**

Pos	Part Number	Description	Remark	Qty	Model
		Auxiliary heater			I9M1/9M9
		Heater			
		Repair kit			
1	4H0 819 061 A	Housing		1	
		Heat exchanger			
2	4H0 898 919 C	Repair kit	/LL	1	Diesel
					IDD7/D1V/D43
					ID51/L0L
		Combustion chamber			
		with			
		Gaskets			
(2)	4H0 898 919 D	Repair kit	/LL	1	Benzin
					IDM0/DU0/DU1
					IL0L
		Combustion chamber			
		with			
		Gaskets			
3	4H0 963 319 A	Glow plug		1	
4	8K0 898 003	Gasket set	/LL	1	Diesel
					IDD7/D1V/D43
					ID51/L0L
		Combustion chamber			
		Heat exchanger			
(4)	8K0 898 003 D	Gasket set	/LL	1	Benzin
					IDM0/DU0/DU1
					IL0L
		Combustion chamber			
		Heat exchanger			
5	4H0 963 031	Blower		1	
6	8K0 815 713	Cover		1	
		Electric motor			
7	4H0 971 411	Wiring harness		1	
8	95B 298 972	Control unit		1	
		with			
		Support			
9	95B 265 417	Cap		1	
		Control unit			
10	95B 898 049	Set		1	
		Maintenance parts			
		Spring			
11	8K0 963 533	Flame sensor		1	
12	8K0 819 915 A	Lid		1	
		Blower			
		with			
		Gasket			
13	4H0 898 919	Repair kit		1	
		Screw			
		M4X16			
14	8K0 898 919	Repair kit		1	
		Screw			
		M5X80			

Illustration: 813-30

PORSCHE

Model: 95B **Model life 2014>>**

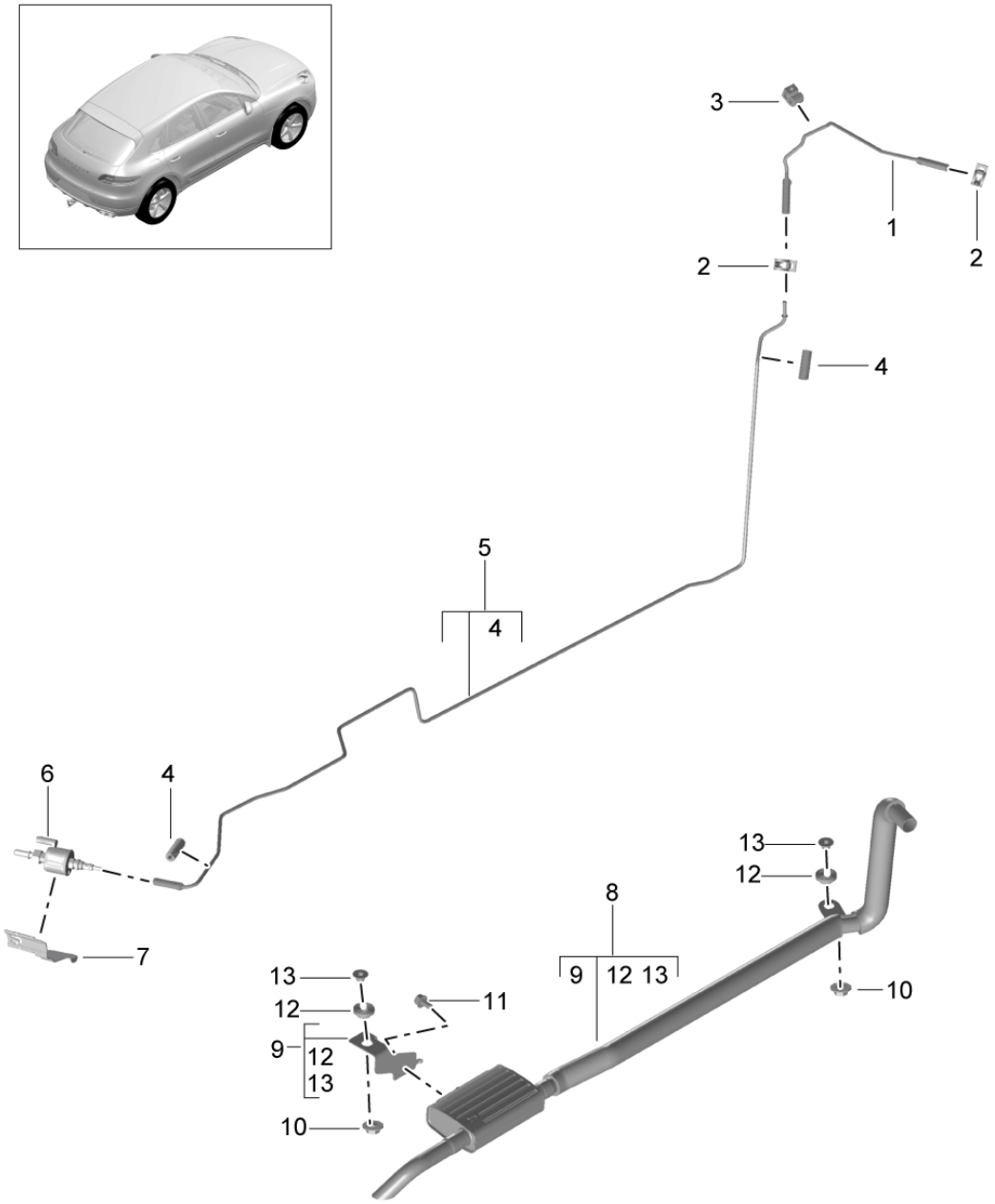

Model: 95B **Model life 2014>>**

Pos	Part Number	Description	Remark	Qty	Model
		Auxiliary heater Fuel system And Exhaust system			
1	95B 261 191 C	Fuel line Wheel housing		1	
2	999 512 746 01	Hose clamp Fuel line B10,5X8,4		3	
3	999 651 409 40	Cable holder 4,75-6,00		1	
4	8E0 611 853 B	Connection piece Fuel line		X	
5	95B 261 191	Fuel line Diesel		1	I2G0
(5)	95B 261 191 A	Fuel line BENZIN		1	I2G1
6	8K0 963 303	Fuel pump Auxiliary heater		1	
7	8R0 261 165 A	Support Fuel pump		1	
8	95B 261 711	Exhaust silencer Auxiliary heater		1	
9	95B 298 579	Repair kit Support Exhaust silencer Auxiliary heater		1	
10	N 901 326 05	Hexagon nut M 6		2	
11	N 107 591 01	Hexagon-head bolt M6X12		1	
12	867 129 669	Grommet		3	
13	955 106 662 00	Spacer		3	

Illustration: 813-40

PORSCHE

Model: 95B **Model life 2014>>**

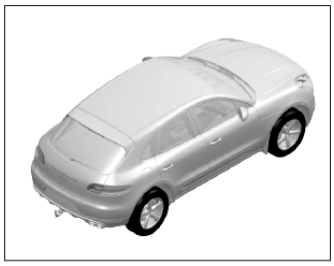

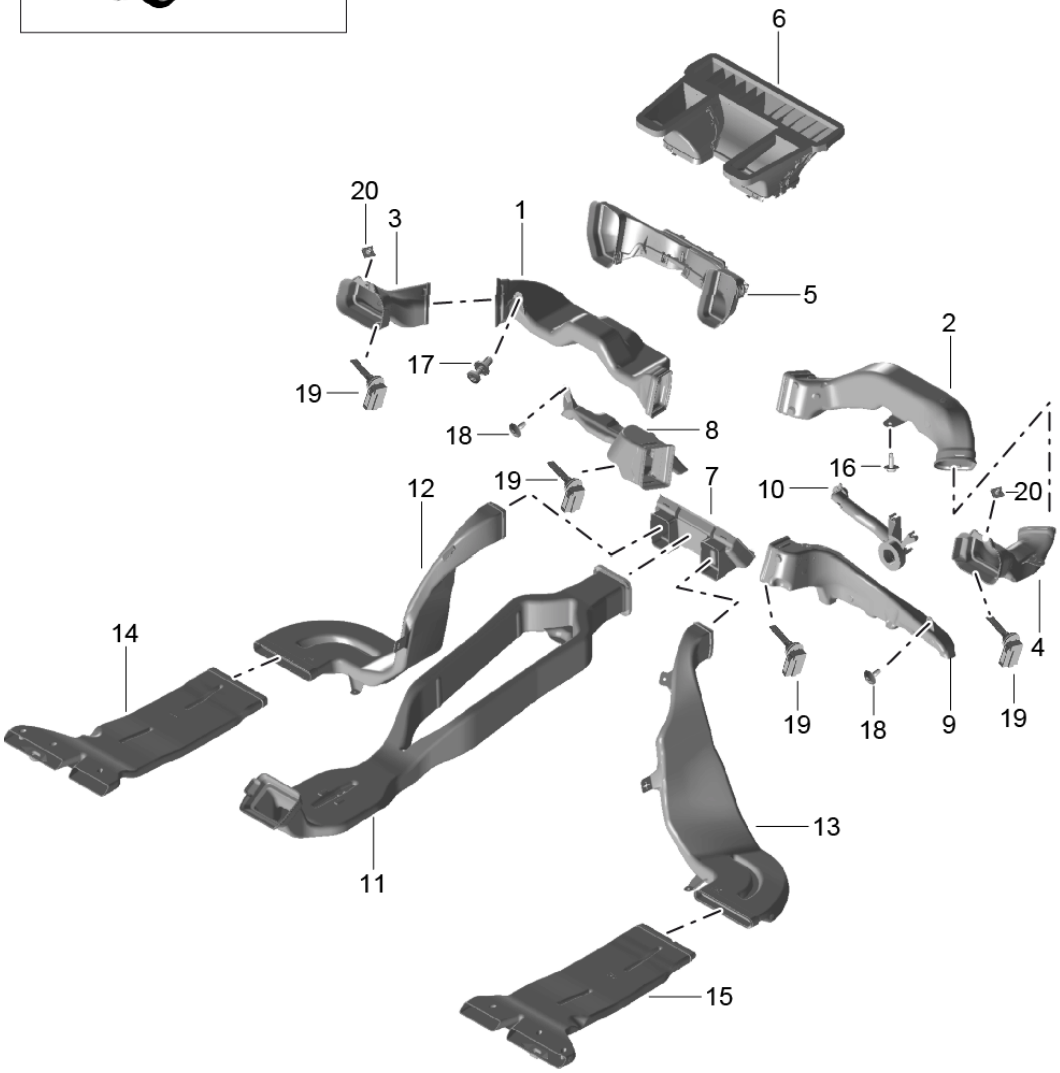

Model: 95B **Model life 2014>>**

Pos	Part Number	Description	Remark	Qty	Model
		Air duct Air distributor			
1	8R1 819 655	Air duct Dashboard	/LL /L	1	IL0L
(1)	8R2 819 655	Air duct Dashboard	/RL /L	1	IL0R
2	8R1 819 656	Air duct Dashboard	/LL /R	1	IL0L
(2)	8R2 819 656	Air duct Dashboard	/RL /R	1	IL0R
3	95B 819 725	Air duct Side vent	/LL /L	1	IL0L
(3)	95B 819 725 A	Air duct Side vent	/RL /L	1	IL0R
4	95B 819 726	Air duct Side vent	/LL /R	1	IL0L
(4)	95B 819 726 A	Air duct Side vent	/RL /R	1	IL0R
5	95B 819 389	Air duct Centre nozzle		1	
6	95B 858 431	Intermediate piece Defroster vent		1	
7	8K0 819 513 E	Connecting piece Centre		1	I9AQ
(7)	95B 819 513	Connecting piece Centre		1	I9AD
8	95B 819 151	Footwell outlet vent Driver's side	/LL /L	1	IL0L
8	95B 819 151 A	Footwell outlet vent Driver's side	/LL /L	1	IL0L
(8)	95B 819 152	Footwell outlet vent Passenger's side	/RL /L	1	IL0R
(8)	95B 819 152 A	Footwell outlet vent Passenger's side	/RL /L	1	IL0R
9	95B 819 168	Footwell outlet vent Passenger's side	/LL /L	1	IL0L
(9)	95B 819 167	Footwell outlet vent Driver's side	/RL /L	1	IL0R
10	8R1 816 311	Air hose Cold air	/LL	1	IL0L/9AQ
(10)	8R2 816 311	Air hose Cold air	/RL	1	IL0R/9AQ
11	95B 857 039 A	Air duct Centre console		1	I9AQ
12	95B 819 503	Connecting piece	/L	1	
13	95B 819 504	Connecting piece	/R	1	
14	8R0 819 801	Air-guide cowl Rear Lower	/L	1	
15	8R0 819 802	Air-guide cowl Rear Lower	/R	1	
16	N 107 452 01	Hexagon-head bolt M5X16-S1-L		2	
17	4F0 857 784	Expansion rivet		1	
18	N 909 855 01	Oval-head screw TP5X12-Q		2	
19	958 572 304 00	Temperature sensor Air duct		4	
20	N 907 777 04	Speed nut M5X13.6X11.5		2	

Illustration: 813-50

Model: 95B **Model life 2014>>**

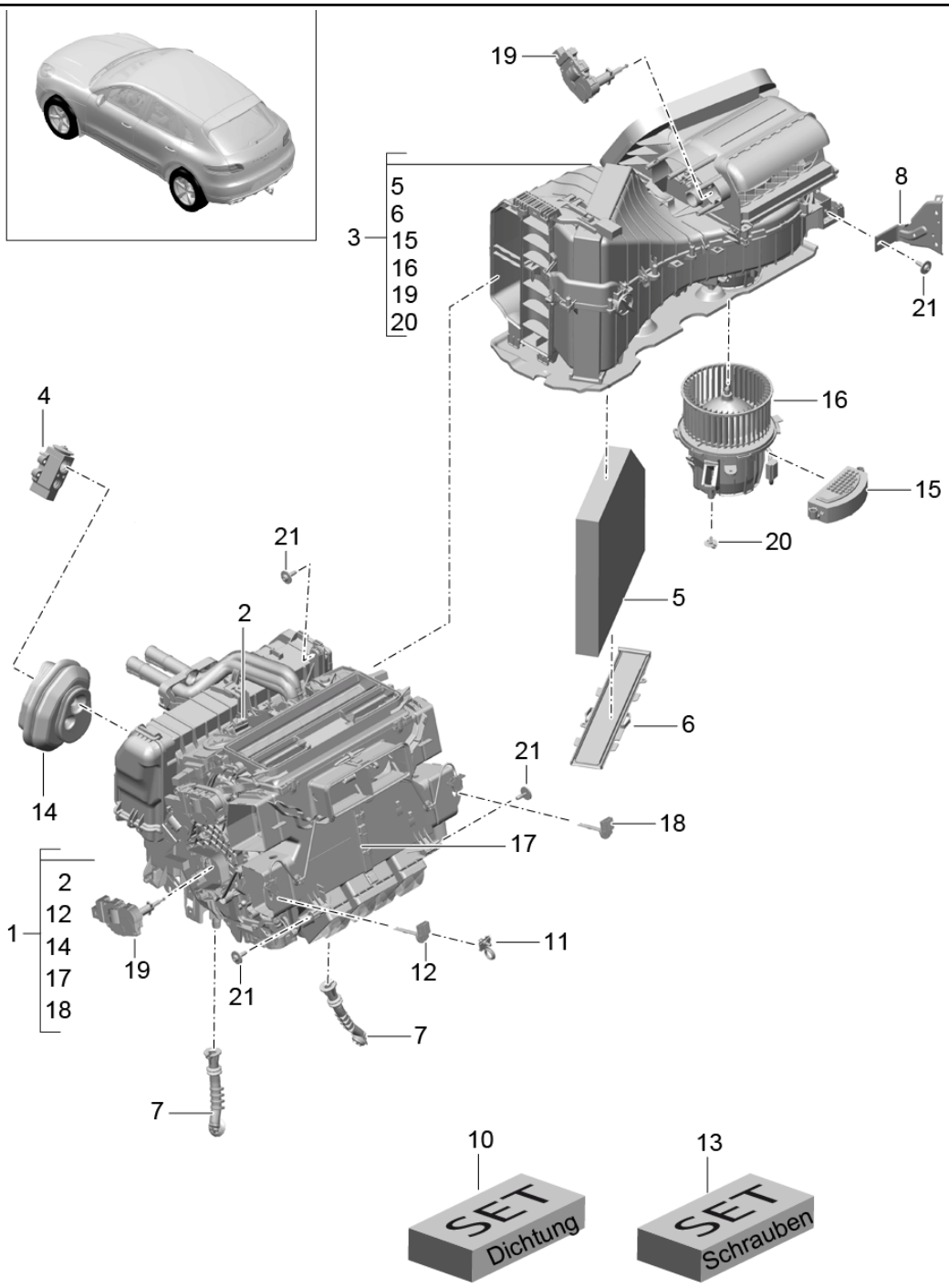

Model: 95B **Model life 2014>>**

Pos	Part Number	Description	Remark	Qty	Model
		Air conditioner			
1	95B 898 030	Distributor Complete without Auxiliary heater	/LL	1	IL0L/7E0
(1)	95B 898 030 A	Distributor Complete with Auxiliary heater	/LL	1	IL0L/7E6
(1)	95B 898 030 B	Distributor Complete without Auxiliary heater	/RL	1	IL0R/7E0
(1)	95B 898 030 C	Distributor Complete with Auxiliary heater	/RL	1	IL0R/7E6
2	8K0 819 333	Strut		1	
3	95B 898 033	Fan housing Complete	/LL	1	IL0L
(3)	95B 898 033 A	Fan housing Complete	/RL	1	IL0R
4	95B 898 031	Expansion valve Parts kit Use also: POS. 10		1	
5	8K0 819 439 B	Particle filter		1	
6	8K0 819 422 A	Lid		1	
7	8K0 260 113	Water drain tube		2	
8	8K1 819 079	Retaining bar	/LL	1	IL0L
(8)	8K2 819 079	Retaining bar	/RL	1	IL0R
10	8K0 820 261	Parts kit for seals		1	
11	8K0 820 536 A	Support		1	
12	8K0 820 539	Temperature sensor		1	
13	8K0 898 540	Parts kit Screw		1	
14	8K1 819 345	Grommet		1	
15	8T0 820 521	Blower Regulator		1	
15	8T0 820 521 E	Blower Regulator		1	
16	8T1 820 021	Blower Complete	/LL	1	IL0L
(16)	8T2 820 021	Blower Complete	/RL	1	IL0R
17	928 570 423 00	Tensioning spring		1	
18	970 653 253 00	Sensor		1	
19	991 624 425 00	Electric motor		1	
20	WHT 000 155	Wing screw		1	
21	N 911 182 01	Combination screw M6 X 18		4	
22	8K0 819 011 C	Auxiliary heater PTC		1	IKK1/7E6
23	8K0 819 229 A	Sealing strip		1	

Illustration: 813-55

PORSCHE

Model: 95B **Model life 2014>>**

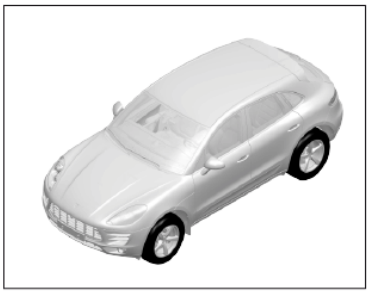

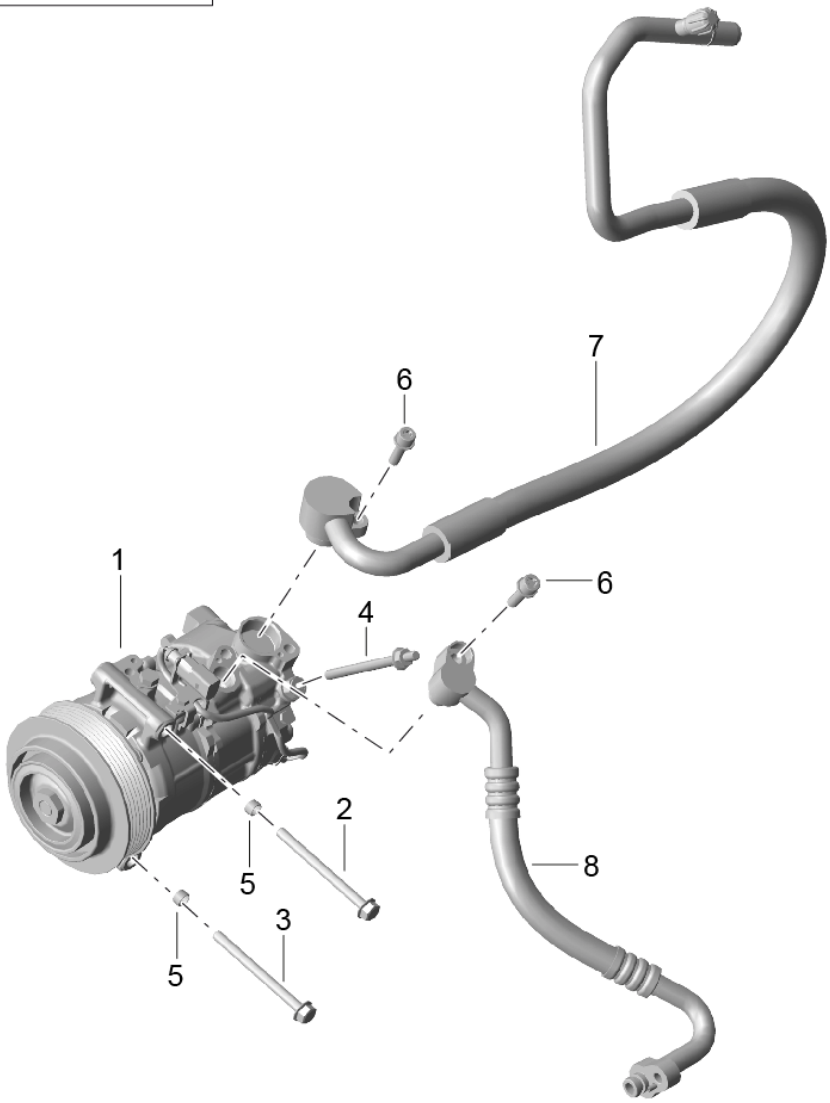

Model: 95B **Model life 2014>>**

Pos	Part Number	Description	Remark	Qty	Model
		Compressor Air conditioner R134A			IKK1
1	8T0 260 805 N	Compressor		1	R4 2,0 TFSI IDM0
1	8T0 260 805 R	Compressor		1	V6 TDI IDD7/D1V/D43 ID50/D51
1	95B 260 805 B	Compressor		1	V6 Turbo IDU0/DU1
1		Compressor		1	V6 GTS ID4A
2	N 106 365 01	Hexagon-head bolt AM8X90		3	IDM0/DU0/DU1
3		Hexagon-head bolt AM8X90		1	IDD7/D1V/D51 I1E9
4	N 107 976 01	Stud BM 8X90/M8		2	IDD7/D1V/D51 I1E9
5	958 147 501 00	Dowel sleeve		2	
6	N 104 144 02	Pan-head screw M8X28-S10-N		2	
7		Intake pipe See illustrations 8/13/50-60		1	
8		Pressure line See illustrations 8/13/50-60		1	
-	000 043 200 04	Oil for Compressor 250 ML		1	

Illustration: 813-56

PORSCHE

Model: 95B **Model life 2014>>**

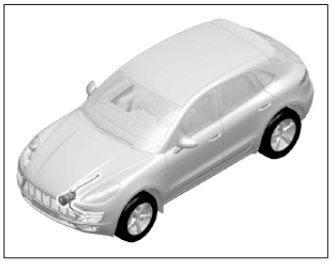

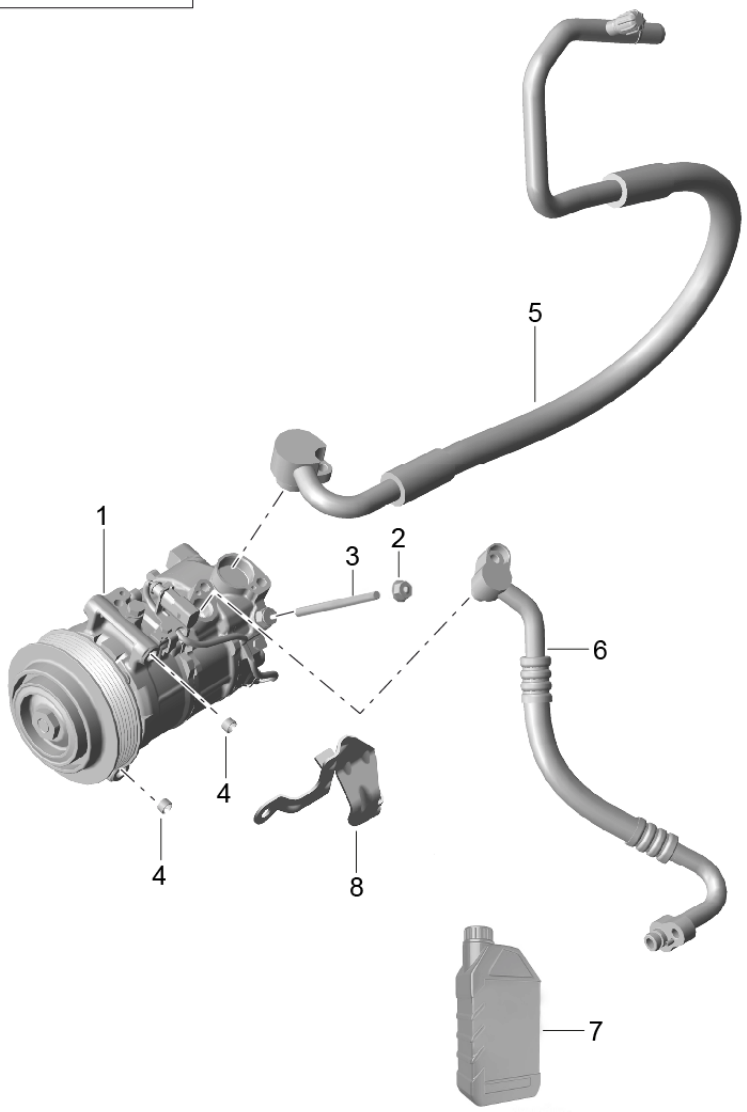

Model: 95B **Model life 2014>>**

Pos	Part Number	Description	Remark	Qty	Model
		Compressor Air conditioner R1234YF			IKK3
1	9A7 816 803 00	Compressor		1	R4 2,0 TFSI IDQ5
1	9A7 816 803 10	Compressor		1	V6 TDI IDD7/D1V/D43 ID51
1	95B 816 803	Compressor		1	V6 Turbo IDU0/DU1/DU3
1		Compressor		1	V6 GTS ID4A
2	N 106 092 01	Hexagon nut M8		X	
3	N 107 976 01	Stud BM 8X90/M8		3	
4	958 147 501 00	Dowel sleeve		2	
5		Intake pipe See illustrations 8/13/50-60		1	
6		Pressure line See illustrations 8/13/50-60		1	
7	9A7 573 900 10	Refrigerant Oil Compressor 250 ML		1	
(7)		Refrigerant for R1234YF 5 KG See workshop manual 8X00IN		1	
8	95B 817 432 D	Protective plate		1	IDD7/DQ5/D1V ID43/D50/D51
(8)	95B 817 432 E	Protective plate		1	IDU0/DU1/D4A

Illustration: 813-58

PORSCHE

Model: 95B **Model life 2014>>**

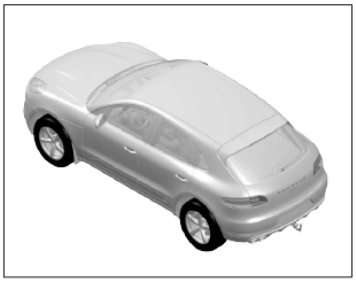

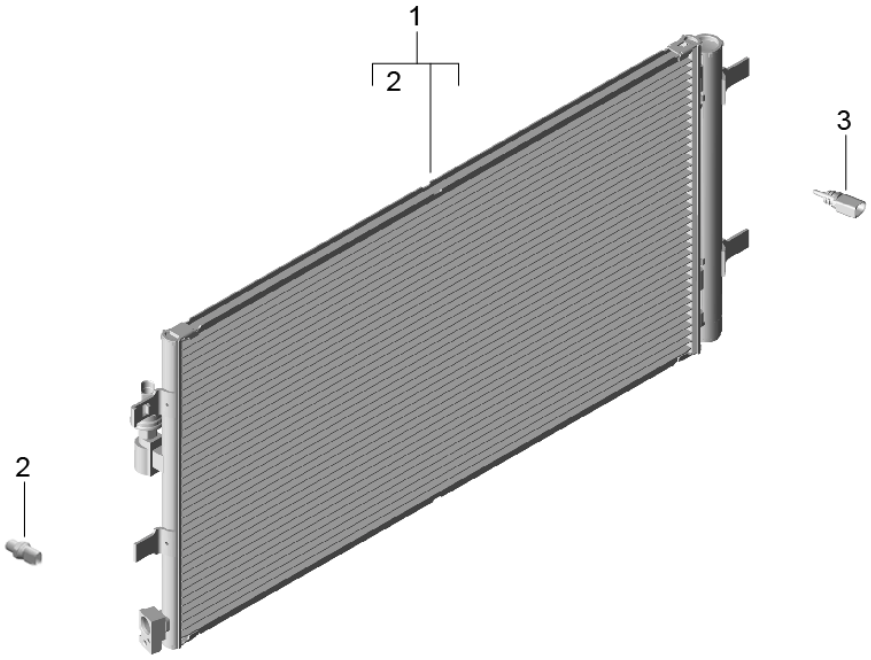

Model: 95B **Model life 2014>>**

Pos	Part Number	Description	Remark	Qty	Model
		Condenser Air conditioner			
1	9A7 260 401 00	Condenser with Pressure sensor R134A		1	
1	9A7 260 403 01	Condenser without Pressure sensor Refrigerant R1234YF	17-	1	IKK3
2		Pressure sensor See illustrations 9/03/05 POS 7		1	
3	8Z0 820 535 A	Outer sensor		1	

Illustration: 813-60

PORSCHE

Model: 95B **Model life 2014>>**

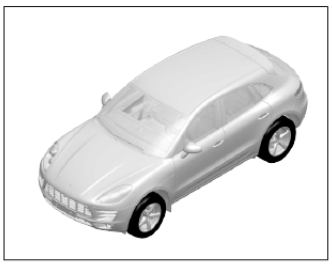

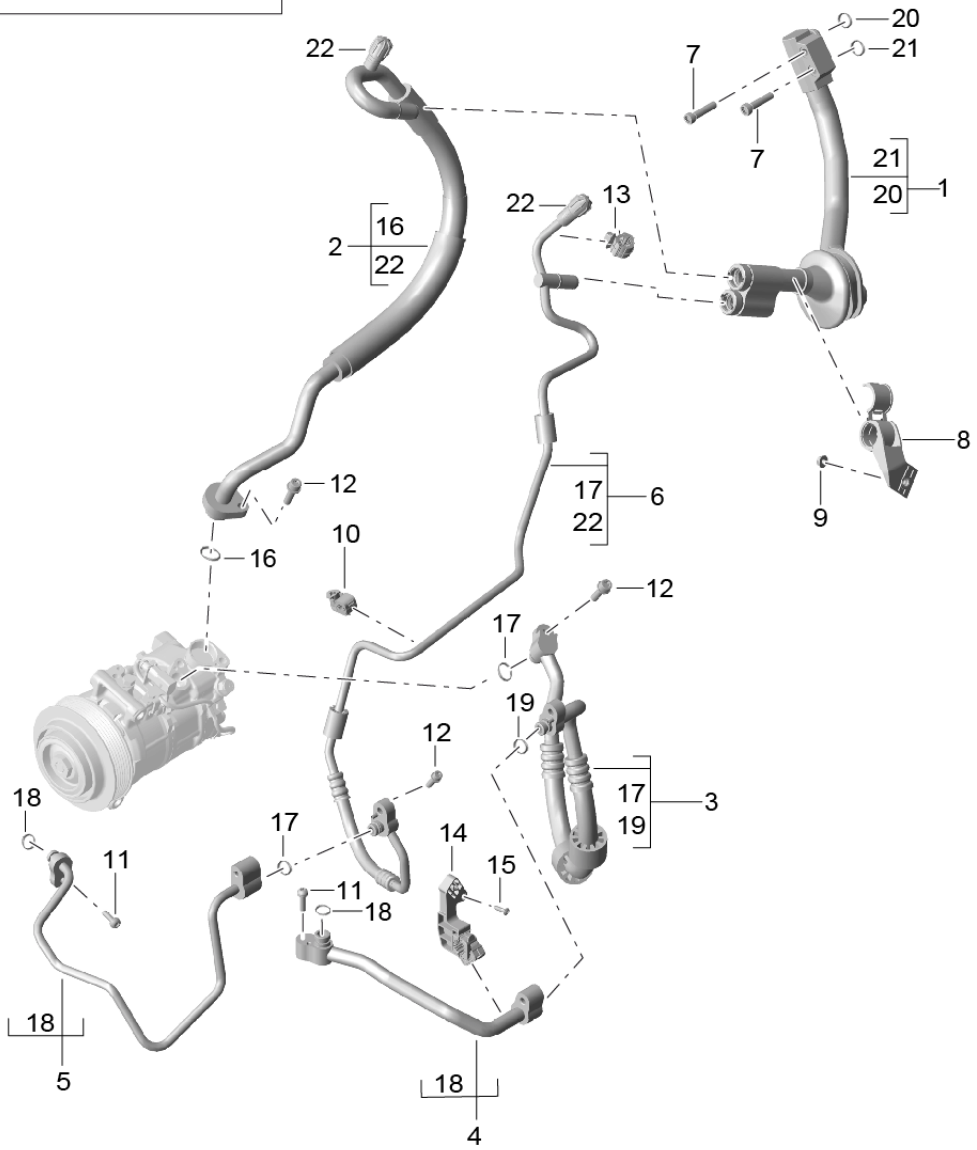

Model: 95B **Model life 2014>>**

Pos	Part Number	Description	Remark	Qty	Model
		Refrigerant circuit R134A			V6 TDI IDD7/D1V/D43 ID51/KK1
1	8R1 260 712 D	Refrigerant line with Grommet	/LL	1	IL0L
(1)	8R2 260 712 C	Refrigerant line with Grommet	/RL	1	IL0R
2	8T0 260 707 A	Refrigerant line Intake pipe Compressor		1	
3	95B 260 701 D	Refrigerant line		1	
4	95B 260 702	Refrigerant line		1	
5	95B 260 367 B	Refrigerant line Adapter		1	
6	95B 260 710 D	Refrigerant line Pressure line		1	
7	N 909 035 02	Multiple-tooth screw M8X35		2	
8	8R0 260 759	Support		1	
9	N 015 082 10	Hexagon nut M6		1	
10	999 507 827 40	Hose holder 10,0-B Bodyshell		1	
11	N 103 472 04	Combination screw M6X25-S11-N		4	
12	N 104 144 02	Pan-head screw M8X28-S10-N		2	
13	991 573 839 01	Support		1	
14	95B 260 197	Support Refrigerant line		1	
15	N 104 420 03	Oval-head screw TP5X16-Q		1	
16	999 707 439 41	O-ring 23,80X2,40N		1	
17	999 707 557 41	O-ring 11,00X2,50N		2	
18	999 707 556 41	O-ring 9,50X2,50N		1	
19	999 707 439 41	O-ring 23,80X2,40N		1	
20	9A7 004 858	O-ring 13,94X2,62		1	
21	955 573 749 00	Round seal 9,5X2,5		1	
22	3C0 820 581	Cover Valve cap		2	

Illustration: 813-62

PORSCHE

Model: 95B **Model life 2014>>**

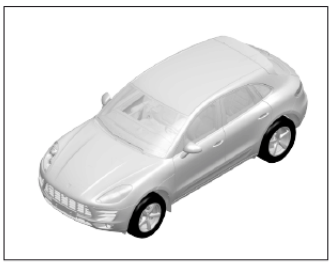

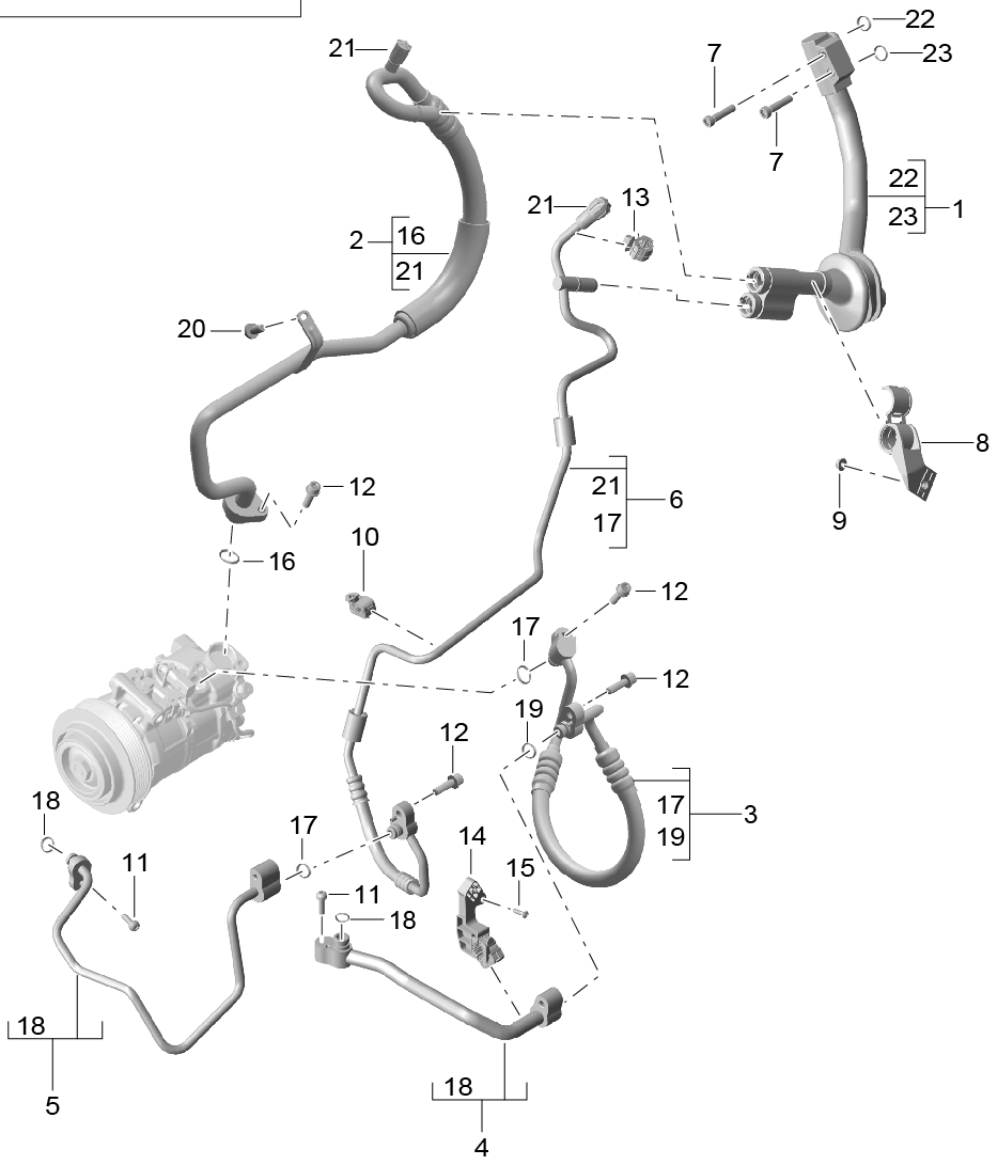

Model: 95B **Model life 2014>>**

Pos	Part Number	Description	Remark	Qty	Model
		Refrigerant circuit	17-		V6 TDI IDD7/D1V/D43 ID51/KK3
		R1234YF			
1	9A7 260 712 00	Refrigerant line with Grommet	/LL	1	IL0L
(1)	9A7 260 712 10	Refrigerant line with Grommet	/RL	1	IL0R
2	95B 816 743 H	Refrigerant line Intake pipe Compressor		1	
3	95B 816 720 B	Refrigerant line		1	
4	95B 260 702	Refrigerant line		1	
5	95B 260 367 B	Refrigerant line Adapter		1	
6	95B 816 741 B	Refrigerant line Pressure line		1	
7	N 909 035 02	Multiple-tooth screw M8X35		2	
8	8R0 260 759	Support		1	
9	N 015 082 10	Hexagon nut M6		1	
10	999 507 827 40	Hose holder 10,0-B Bodyshell		1	
11	N 103 472 04	Combination screw M6X25-S11-N		4	
12	N 104 144 02	Pan-head screw M8X28-S10-N		2	
14	95B 260 197	Support Refrigerant line		1	
15	N 104 420 03	Oval-head screw TP5X16-Q		1	
16	999 707 439 41	O-ring 23,80X2,40N		1	
17	999 707 557 41	O-ring 11,00X2,50N		2	
18	999 707 556 41	O-ring 9,50X2,50N		1	
19	999 707 439 41	O-ring 23,80X2,40N		1	
20	N 103 352 06	Round head screw M6X12		1	
21	9A7 816 581 00	Cover Valve		1	
22	9A7 004 858	O-ring 13,94X2,62		1	
23	955 573 749 00	Round seal 9,5X2,5		1	

Illustration: 813-65

PORSCHE

Model: 95B **Model life 2014>>**

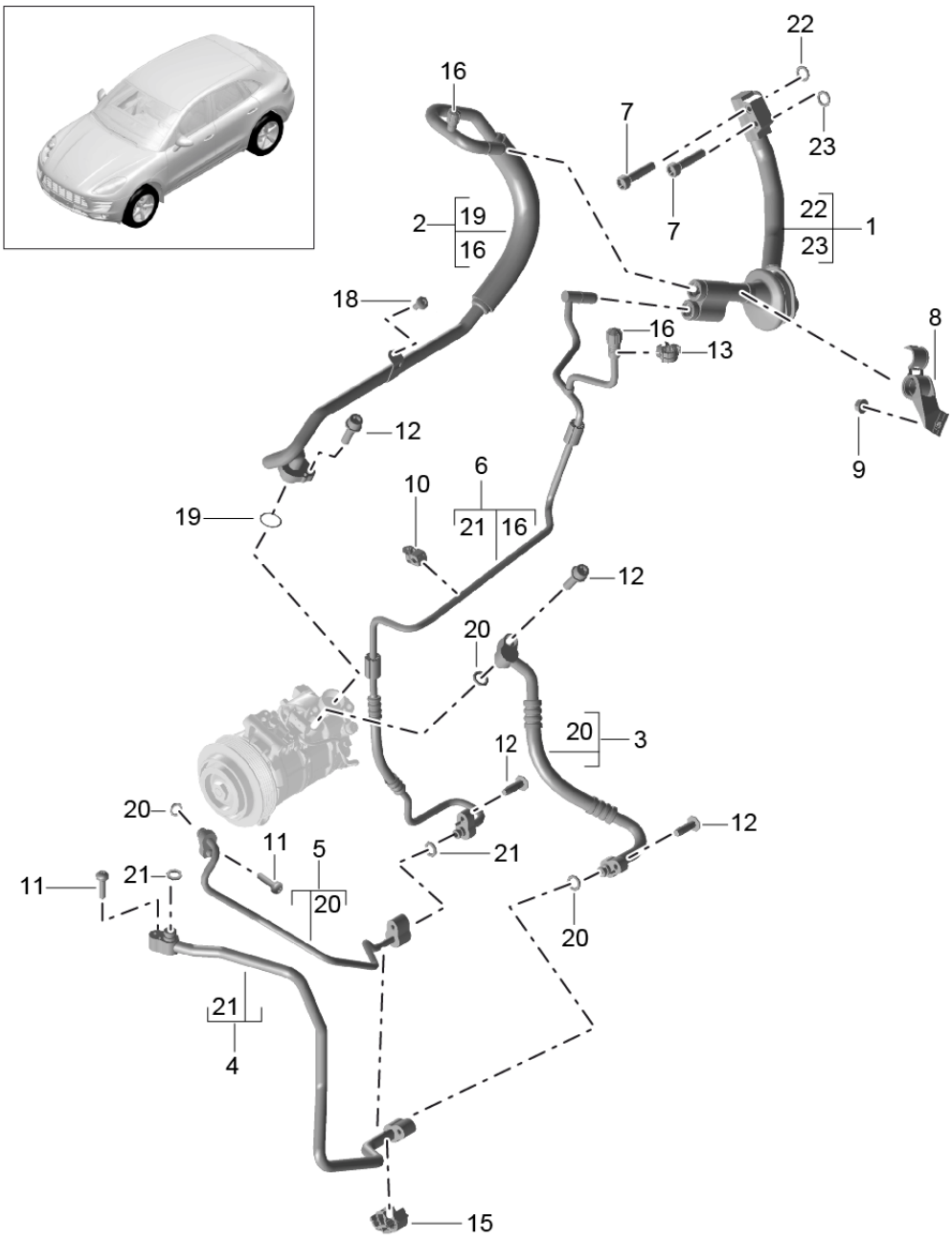

Model: 95B **Model life 2014>>**

Pos	Part Number	Description	Remark	Qty	Model
		Refrigerant circuit			V6 BT IDU0/DU1/D4A IKK1
		R134A			
1	8R1 260 712 D	Refrigerant line with Grommet	/LL	1	IL0L
(1)	8R2 260 712 C	Refrigerant line with Grommet	/RL	1	IL0R
2	95B 260 707	Refrigerant line Intake pipe Compressor		1	
3	95B 260 701 E	Refrigerant line Pressure line Compressor		1	
4	95B 260 702 D	Refrigerant line		1	
5	95B 260 367 C	Refrigerant line Adapter		1	
6	95B 260 710	Refrigerant line Pressure line		1	
(6)	95B 816 741 A	Refrigerant line Pressure line R1234YF		1	IKK3
7	N 909 035 02	Multiple-tooth screw M8X35		2	
8	8R0 260 759	Support		1	
9	N 015 082 10	Hexagon nut M6		1	
10	999 507 827 40	Hose holder 10,0-B		1	
11	N 103 472 04	Combination screw M6X25-S11-N		4	
12	N 104 144 02	Pan-head screw M8X28-S10-N		2	
13	991 573 839 01	Support		1	
14	95B 260 089 B	Support Refrigerant line		1	
15	WHT 006 919	Support 10,0/16,0	-16	1	
(15)	9A7 008 222 00	Support 10,0/16,0	17-	1	
16	3C0 820 581	Cover Valve cap		2	
17	N 107 214 01	Oval-head screw		1	
18	N 103 352 06	Round head screw M6X12		1	
19	999 707 439 41	O-ring 23,80X2,40N		1	
20	999 707 557 41	O-ring 11,00X2,50N		2	
21	999 707 556 41	O-ring 9,50X2,50N		1	
22	9A7 004 858	O-ring 13,94X2,62		1	
23	955 573 749 00	Round seal 9,5X2,5		1	

Illustration: 813-67

PORSCHE

Model: 95B **Model life 2014>>**

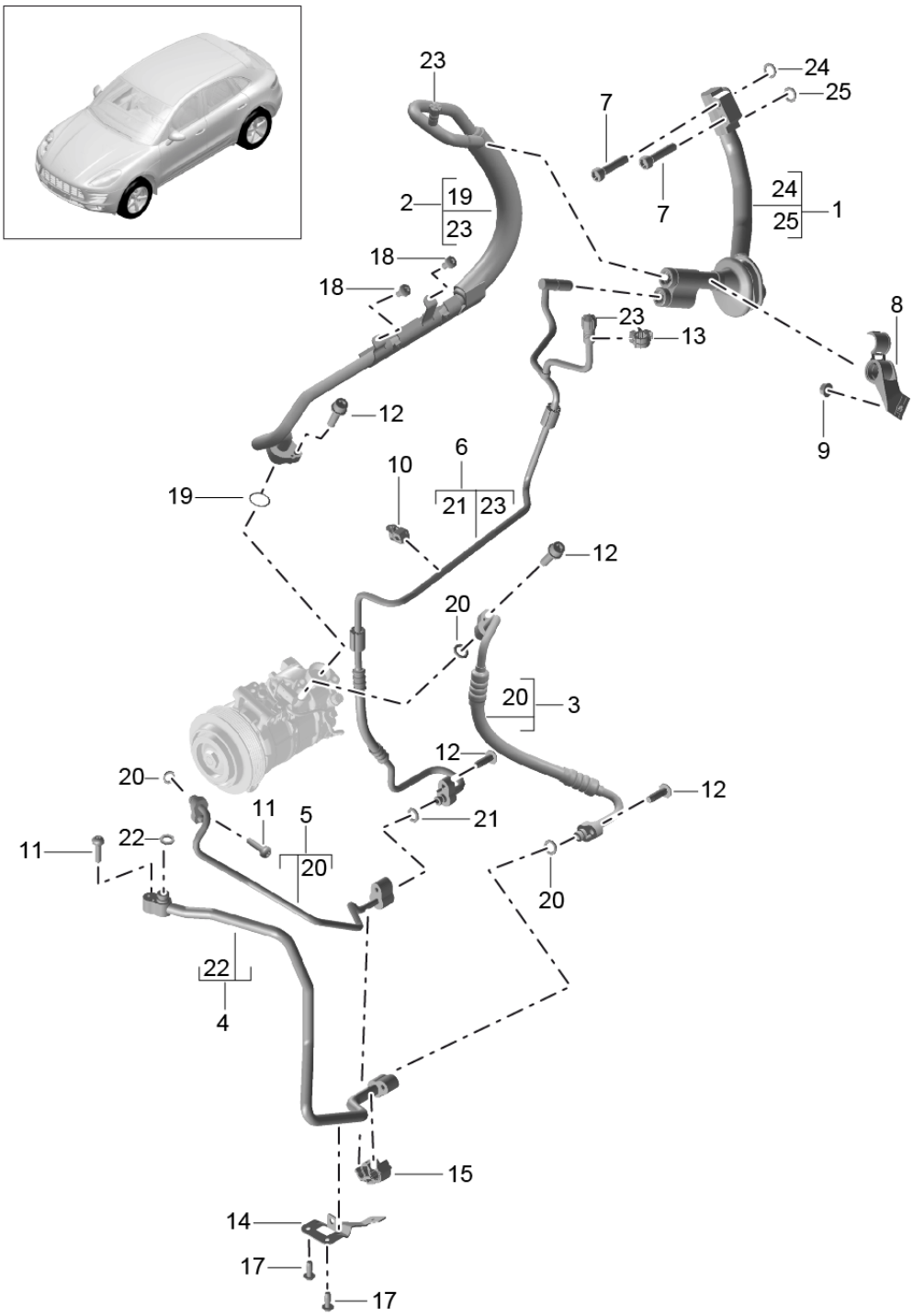

Illustration: 813-67

Model: 95B **Model life 2014>>**

Pos	Part Number	Description	Remark	Qty	Model
		Refrigerant circuit R1234YF	17-		V6 BT IDU0/DU1/D4A IKK3
1	9A7 260 712 00	Refrigerant line with Grommet	/LL	1	IL0L
(1)	9A7 260 712 10	Refrigerant line with Grommet	/RL	1	IL0R
2	95B 816 743 A	Refrigerant line Intake pipe Compressor		1	
3	95B 816 720 A	Refrigerant line Pressure line Compressor		1	
4	95B 260 702 D	Refrigerant line R1234YF		1	
5	95B 260 367 C	Refrigerant line Adapter		1	
6	95B 816 741 A	Refrigerant line Pressure line R1234YF		1	
7	N 909 035 02	Multiple-tooth screw M8X35		2	
8	8R0 260 759	Support		1	
9	N 015 082 10	Hexagon nut M6		1	
10	999 507 827 40	Hose holder 10,0-B		1	
11	N 103 472 04	Combination screw M6X25-S11-N		4	
12	N 104 144 02	Pan-head screw M8X28-S10-N		X	
13	991 573 839 01	Support		1	
14	95B 260 089 B	Support Refrigerant line		1	
(15)	9A7 008 222 00	Support 10,0/16,0		1	
17	N 107 214 01	Oval-head screw		2	
18	N 103 352 06	Round head screw M6X12		2	
19	999 707 439 41	O-ring 23,80X2,40N		1	
20	999 707 557 41	O-ring 11,00X2,50N		2	
21	999 707 556 41	O-ring 9,50X2,50N		1	
22	999 707 558 41	O-ring 13,70X2,50N		1	
23	9A7 816 581 00	Cover Valve		2	
24	9A7 004 858	O-ring 13,94X2,62		1	
25	955 573 749 00	Round seal 9,5X2,5		1	

Illustration: 813-70

PORSCHE

Model: 95B **Model life 2014>>**

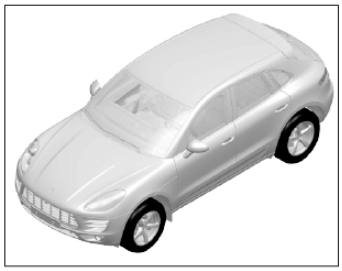

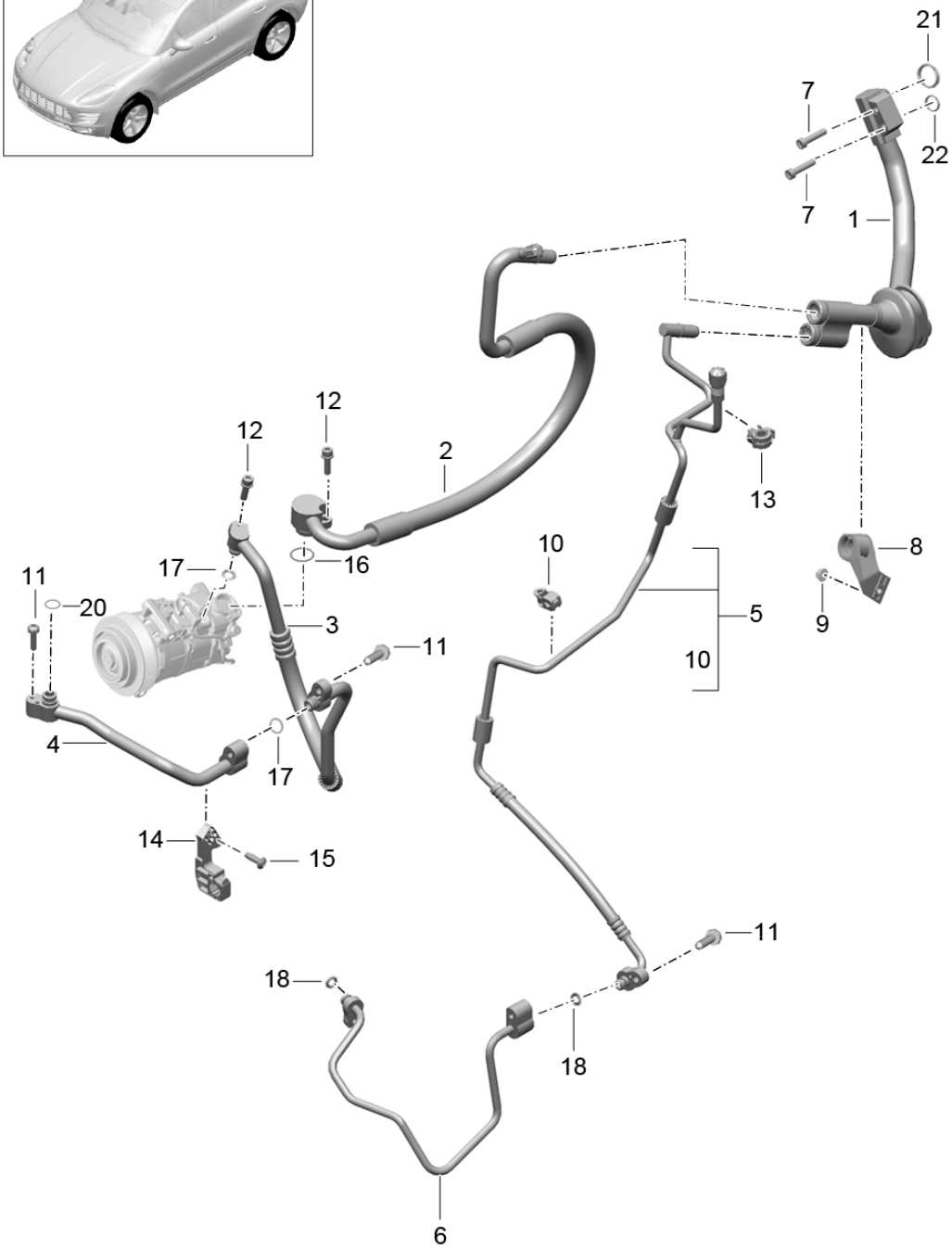

Model: 95B **Model life 2014>>**

Pos	Part Number	Description	Remark	Qty	Model
		Refrigerant circuit R134A			R4 2,0 TFSI IDM0/KK1
1	8R1 260 712 D	Refrigerant line with Grommet	/LL	1	IL0L
(1)	8R2 260 712 C	Refrigerant line with Grommet	/RL	1	IL0R
2	8T0 260 707 B	Refrigerant line Intake pipe Compressor		1	
3	95B 260 701 A	Refrigerant line		1	
4	95B 260 702	Refrigerant line		1	
5	95B 260 710 B	Refrigerant line Pressure line		1	IKK1
6	95B 260 367 B	Refrigerant line Adapter		1	
7	N 909 035 02	Multiple-tooth screw M8X35		2	
8	8R0 260 759	Support		1	
9	N 015 082 10	Hexagon nut M6		2	
10	999 507 827 40	Hose holder 10,0-B		1	
11	N 103 472 04	Combination screw M6X25-S11-N		4	
12	N 104 144 02	Pan-head screw M8X28-S10-N		2	
13	991 573 839 01	Support		1	
14	95B 260 197	Support Refrigerant line		1	
15	N 104 420 03	Oval-head screw TP5X16-Q		1	
16	999 707 439 41	O-ring 23,80X2,40N		1	
17	999 707 557 41	O-ring 11,00X2,50N		2	
18	999 707 556 41	O-ring 9,50X2,50N		1	
19	999 707 439 41	O-ring 23,80X2,40N		1	
20	999 707 558 41	O-ring 13,70X2,50N		1	
21	9A7 004 858	O-ring 13,94X2,62		1	
22	955 573 749 00	Round seal 9,5X2,5		1	

Illustration: 813-72

Model: 95B **Model life 2014>>**

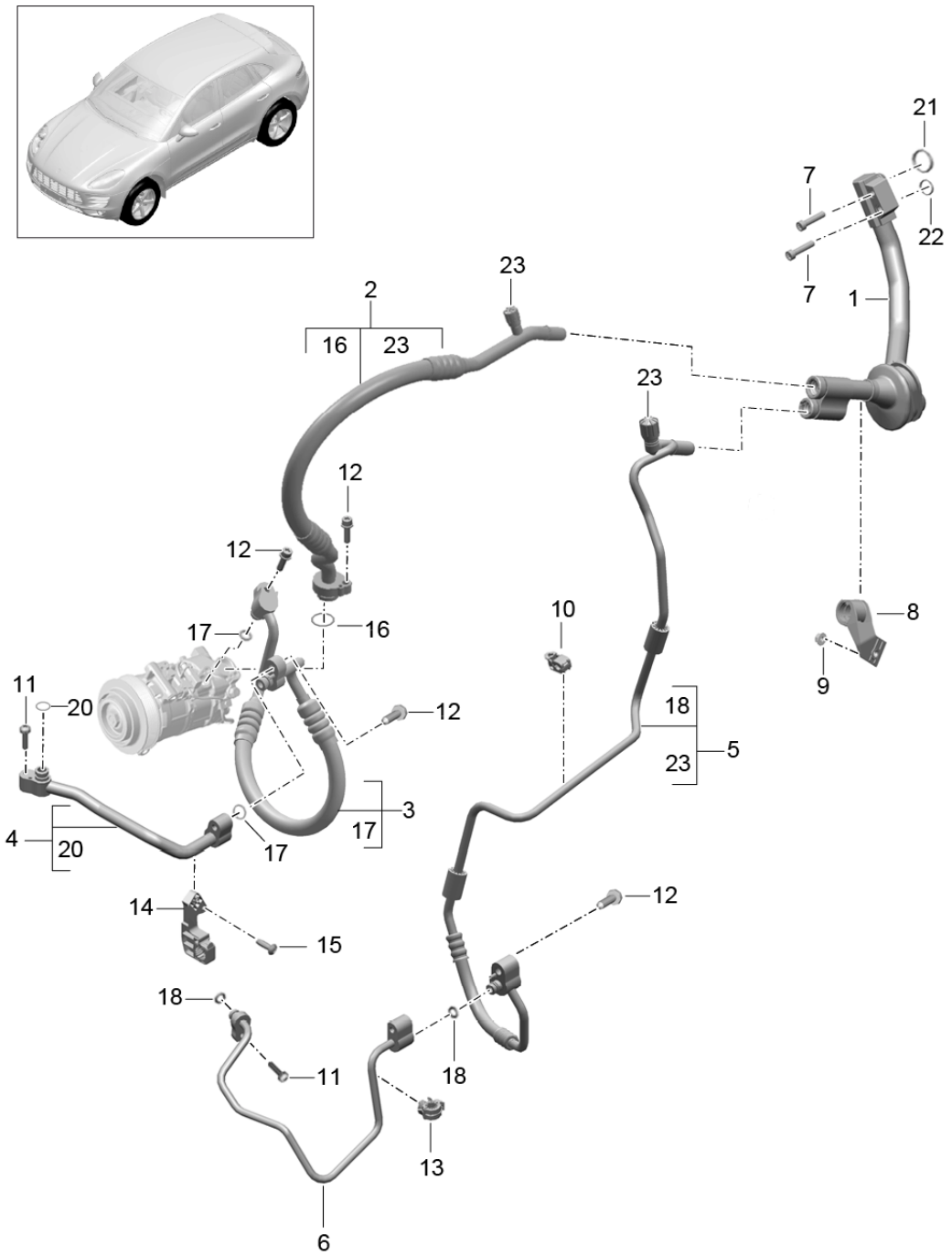

Model: 95B **Model life 2014>>**

Pos	Part Number	Description	Remark	Qty	Model
		Refrigerant circuit R1234YF	17-		R4 2,0 TFSI IDM0/KK3
1	9A7 260 712 00	Refrigerant line with Grommet	/LL	1	IL0L
(1)	9A7 260 712 10	Refrigerant line with Grommet	/RL	1	IL0R
2	95B 816 743 F	Refrigerant line Intake pipe Compressor		1	
3	95B 816 720	Refrigerant line		1	
4	95B 260 702	Refrigerant line		1	
5	95B 816 741	Refrigerant line Pressure line		1	
6	95B 260 367 B	Refrigerant line Adapter		1	
7	N 909 035 02	Multiple-tooth screw M8X35		2	
8	8R0 260 759	Support		1	
9	N 015 082 10	Hexagon nut M6		2	
10	999 507 827 40	Hose holder 10,0-B		1	
11	N 103 472 04	Combination screw M6X25-S11-N		2	
12	N 104 144 02	Pan-head screw M8X28-S10-N		X	
13	991 573 839 01	Support		1	
14	95B 260 197	Support Refrigerant line		1	
15	N 104 420 03	Oval-head screw TP5X16-Q		1	
16	999 707 439 41	O-ring 23,80X2,40N		1	
17	999 707 557 41	O-ring 11,00X2,50N		2	
18	999 707 556 41	O-ring 9,50X2,50N		1	
19	999 707 439 41	O-ring 23,80X2,40N		1	
20	999 707 558 41	O-ring 13,70X2,50N		1	
21	9A7 004 858	O-ring 13,94X2,62		1	
22	955 573 749 00	Round seal 9,5X2,5		1	
23	9A7 816 581 00	Cover Valve		1	

Illustration: 813-90

PORSCHE

Model: 95B **Model life 2014>>**

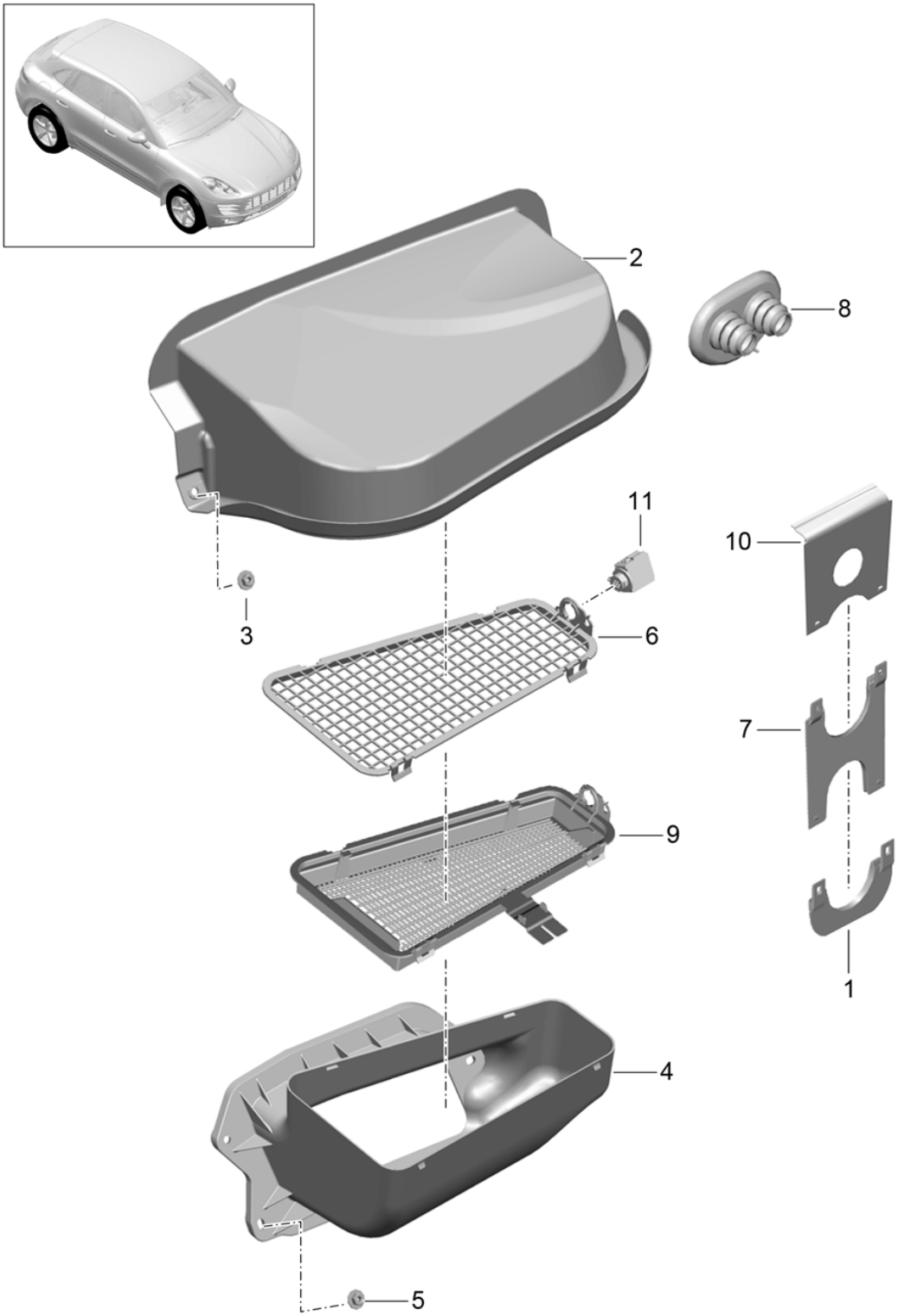

Model: 95B **Model life 2014>>**

Pos	Part Number	Description	Remark	Qty	Model
		Plenum panel			
(1)	8K0 260 753 B	Grommet		1	
2	95B 819 979	Rain channel	/LL	1	IL0L
(2)	95B 819 979 A	Rain channel	/RL	1	IL0R
3	N 901 326 05	Hexagon nut		2	
		M6			
4	8K1 819 904 A	Air intake	/LL	1	IL0L
		Plenum panel			
(4)	8K2 819 904 A	Air intake	/RL	1	IL0R
		Plenum panel			
5	N 901 326 05	Hexagon nut		3	
		M6			
6	8K1 819 408 A	Grille	/LL	1	IL0L
(6)	8K2 819 408 A	Grille	/RL	1	IL0R
7	8K0 260 753 C	Grommet		1	
8	8K0 819 699 A	Grommet		1	
		Double line			
		Heat exchanger			
9	8KD 819 441 A	Filter		1	IB1P
		with			
		Bracket			
10	95B 971 824 B	Cable guide		1	IDU0/DU1
(10)	95B 971 824 C	Cable guide		1	IDD7/DM0/D1V
					ID43/D51
11	958 572 659 00	Sensor		1	
		Air inlet			

Illustration: 817-00

PORSCHE

Model: 95B **Model life 2014>>**

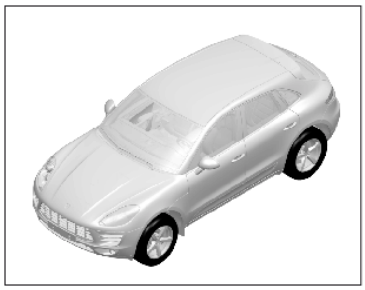

Model: 95B **Model life 2014>>**

Pos	Part Number	Description	Remark	Qty	Model
		Seat rail			
		Cover			
		Fastening screw			
		Seat			
1	N 911 475 02	Fastening screw		1	
		Seat			
2	958 521 465 00	Cap		1	I3PB/3PE/3PN
		Screw			
		Seat			
		Front			
	958 521 465 00 1E0	Black			+VC,+VJ,+VF,
					+VI,+VU,+VK,
					+VO,+VX,+VZ
	958 521 465 00 OP1	Agate Grey			+VD,+VG,+VL
					+VQ
	958 521 465 00 4H0	Luxor Beige			+VE,+VH,+VM
	958 521 465 00 OM8	Saddle Tan			+VN,+VP
	958 521 465 00 7N0	Espresso			+VR
3	958 521 466 00	Cap		1	I3PB/3PE/3PN
		Screw			
		Seat			
		Front			
	958 521 466 00 1E0	Black			+VC,+VJ,+VF,
					+VI,+VU,+VK,
					+VO,+VX,+VZ
	958 521 466 00 OP1	Agate Grey			+VD,+VG,+VL
					+VQ
	958 521 466 00 4H0	Luxor Beige			+VE,+VH,+VM
	958 521 466 00 OM8	Saddle Tan			+VN,+VP
	958 521 466 00 7N0	Espresso			+VR
-	95B 882 767	Cap		1	I3PB/3PE/3PH
					I3PJ
		Screw			
		Seat			
		Mechanical			
	95B 882 767 1E0	Black			+VC,+VJ,+VF,
					+VI,+VU,+VK,
					+VO,+VX,+VZ
	95B 882 767 OP1	Agate Grey			+VD,+VG,+VL,
					+VQ
	95B 882 767 4H0	Luxor Beige			+VE,+VH,+VM
	95B 882 767 OM8	Saddle Tan			+VN,+VP
	95B 882 767 7N0	Espresso			+VR
-	95B 882 768	Cap		1	I3PB/3PE/3PH
					I3PJ
		Screw			
		Seat			
		Mechanical			
	95B 882 768 1E0	Black			+VC,+VJ,+VF,
					+VI,+VU,+VK,
					+VO,+VX,+VZ
	95B 882 768 OP1	Agate Grey			+VD,+VG,+VL
					+VQ
	95B 882 768 4H0	Luxor Beige			+VE,+VH,+VM
	95B 882 768 OM8	Saddle Tan			+VN,+VP
	95B 882 768 7N0	Espresso			+VR
4	95B 881 479	Cap	/L	1	I3PE
		Seat rail			
		Rear			
	95B 881 479 1E0	Satin black			+VC,+VJ,+VF,
					+VI,+VU,+VK,
					+VO,+VX+VZ
	95B 881 479 OP1	Agate Grey			+VD,+VG,+VL,

Model: 95B **Model life 2014>>**

Pos	Part Number	Description	Remark	Qty	Model
					+VQ
	95B 881 479 4H0	Luxor Beige			+VE,+VH,+VM
(4)	95B 881 480	Cap Seat rail Rear	/R	1	I3PE
	95B 881 480 1E0	Satin black			+VC,+VJ,+VF, +VI,+VU,+VK, +VO,+VX+VZ
	95B 881 480 OP1	Agate Grey			+VD,+VG,+VL, +VQ
	95B 881 480 4H0	Luxor Beige			+VE,+VH,+VM
(4)	958 521 564 00	Cover Seat rail Rear	/R	1	I3PE/3PN
	958 521 564 00 1E0	Satin black			+VC,+VJ,+VF, +VI,+VU,+VK, +VO,+VX+VZ
	958 521 564 00 OP1	Agate Grey			+VD,+VG,+VL, +VQ
	958 521 564 00 4H0	Luxor Beige			+VE,+VH,+VM
5	958 521 463 00	Cap Seat rail Front	/L	1	I3PB/3PN
	958 521 463 00 1E0	Satin black			+VC,+VJ,+VF, +VI,+VU,+VK, +VO,+VX+VZ
	958 521 463 00 OP1	Agate Grey			+VD,+VG,+VL, +VQ
	958 521 463 00 4H0	Luxor Beige			+VE,+VH,+VM
	958 521 463 00 OM8	Saddle Tan			+VN,+VP
	958 521 463 00 7N0	Espresso			+VR
(5)	958 521 464 00	Cap Seat rail Front	/R	1	I3PB/3PN
	958 521 464 00 1E0	Satin black			+VC,+VJ,+VF, +VI,+VU,+VK, +VO,+VX+VZ
	958 521 464 00 OP1	Agate Grey			+VD,+VG,+VL, +VQ
	958 521 464 00 4H0	Luxor Beige			+VE,+VH,+VM
	958 521 464 00 OM8	Saddle Tan			+VN,+VP
	958 521 464 00 7N0	Espresso			+VR
(5)	95B 881 477	Cap Seat rail Front	/L	1	I3PE
	95B 881 477 1E0	Satin black			+VC,+VJ,+VF, +VI,+VU,+VK, +VO,+VX+VZ
	95B 881 477 OP1	Agate Grey			+VD,+VG,+VL +VQ
	95B 881 477 4H0	Luxor Beige			+VE,+VH,+VM
	95B 881 477 OM8	Saddle Tan			+VN,+VP
	95B 881 477 7N0	Espresso			+VR
(5)	95B 881 478	Cap Seat rail Front	/R	1	I3PE
	95B 881 478 1E0	Satin black			+VC,+VJ,+VF, +VI,+VU,+VK, +VO,+VX+VZ
	95B 881 478 OP1	Agate Grey			+VD,+VG,+VL +VQ
	95B 881 478 4H0	Luxor Beige			+VE,+VH,+VM
	95B 881 478 OM8	Saddle Tan			+VN,+VP

Model: 95B **Model life 2014>>**

Pos	Part Number	Description	Remark	Qty	Model
	95B 881 478 7N0	Espresso			+VR
(5)	958 521 464 00	Cap Seat rail Front	/R	1	I3PE/3PN
	958 521 464 00 1E0	Satin black			+VC,+VJ,+VF, +VI,+VU,+VK, +VO,+VX+VZ
	958 521 464 00 OP1	Agate Grey			+VD,+VG,+VL, +VQ
	958 521 464 00 4H0	Luxor Beige			+VE,+VH,+VM
	958 521 464 00 OM8	Saddle Tan			+VN,+VP
	958 521 464 00 7N0	Espresso			+VR
6	958 521 327 00	Trim cover Cover Backrest Seat adjuster Tunnel		1	
	958 521 327 00 82V	Titanium Black			+VC,+VJ,+VF, +VI,+VU,+VK, +VO
	958 521 327 00 OP1	Agate Grey			+VD,+VG,+VC
	958 521 327 00 4H0	Luxor Beige			+VE,+VH,+VM, +VP
	958 521 327 00 7N0	Espresso			+VR
	958 521 327 00 OM8	Saddle Tan			+VN
	958 521 327 00 OV4	Pebble Grey			+VQ
7	N 038 501 3	Expansion rivet Lining Cover Backrest Seat adjuster Tunnel		1	
8	8E0 881 500	Pin Lining Cover Backrest Seat adjuster Tunnel		1	

Illustration: 817-05

PORSCHE

Model: 95B **Model life 2014>>**

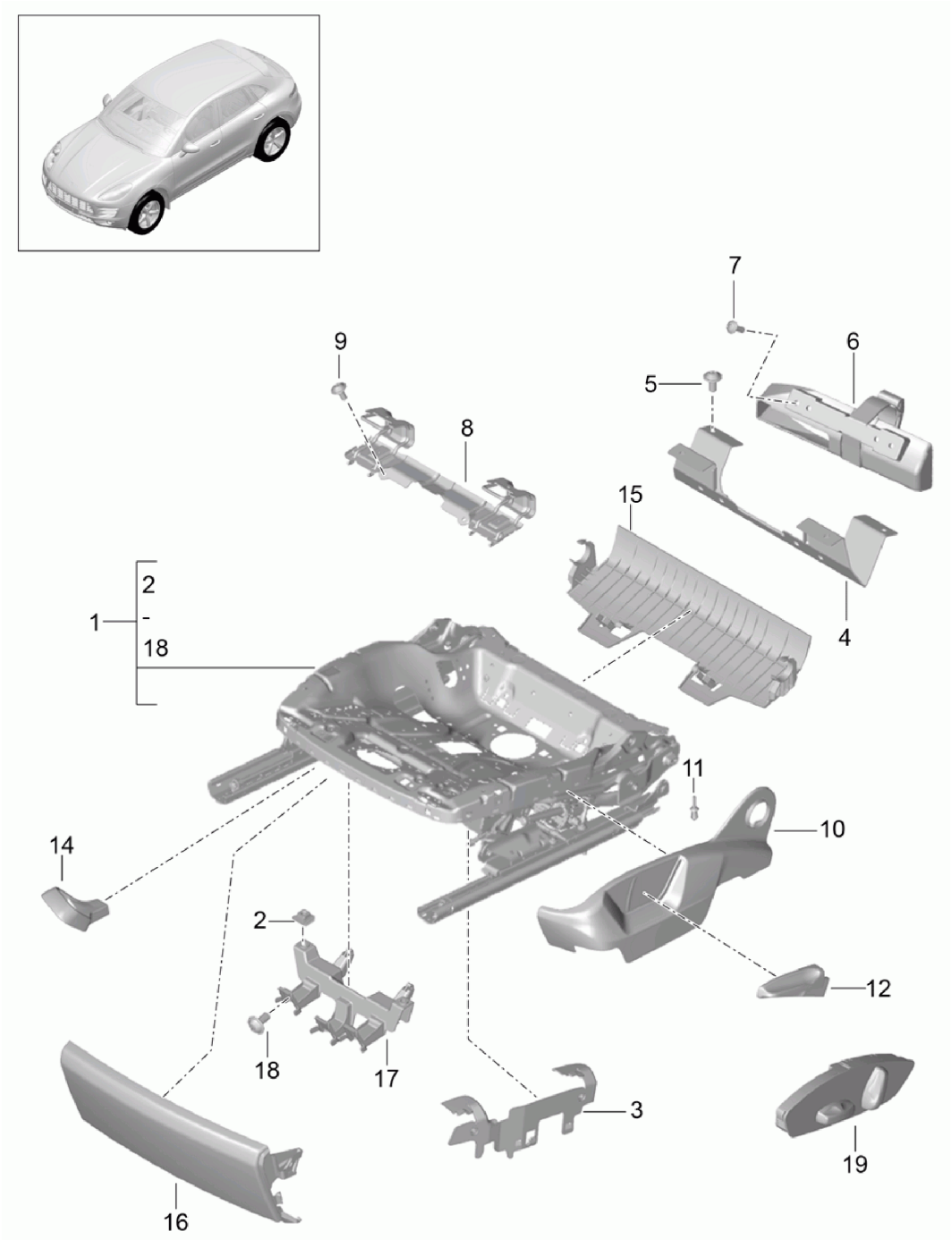

Model: 95B **Model life 2014>>**

Pos	Part Number	Description	Remark	Qty	Model
		Seat adjuster			
		Accessories			
		Cover			
1	8K0 881 105 T	Seat adjuster		1	I3L4/3L5/3L6
					I3PB/3PH/3PN
		Electric			
(1)	8K0 881 106 T	Seat adjuster		1	I3L4/3L5/3L6
					I3PE/3PJ/3PN
		Electric			
(1)	7P6 881 105 B	Seat adjuster		1	I3PE/3PJ
		Mechanical			
(1)	7P6 881 106 B	Seat adjuster		1	I3PB/3PH
		Mechanical			
2	N 900 880 03	Speed nut		1	
		Seat adjuster			
3	958 521 539 00	Reinforcement plate		1	I3PB/3PN
		Lining			
		Seat adjuster	15-		I3PB/3PH/3PN
4	958 521 285 00	Support		1	IL0R/6A7
		Fire extinguisher			
		Seat adjuster			
5	N 907 371 01	Outer hexagon round screw		1	
		Retaining bracket			
		Fire extinguisher			
		Seat adjuster			
6	7PP 882 607	Support		1	IL0L/6A7
		Fire extinguisher	15-		IL0R/6A7
		Seat adjuster			
7	N 107 148 01	Outer hexagon round screw		1	
		Support			
		Fire extinguisher			
		Seat adjuster			
8	958 521 545 00	Support		1	IL0L/3B9
		Child car seat	15-		IL0R/3B9
		Seat adjuster			
9	N 907 371 05	Outer hexagon round screw		1	
		Support			
		Child car seat			
		Seat adjuster			
10	95B 881 313	Lining	/L	1	I3PE
		Seat adjuster	15-		I3L3/3PE/3PJ
		Manually			
	95B 881 313 82V	Titanium Black			+VC,+VJ,+VF,
					+VI,+VU,+VK,
					+VO
	95B 881 313 OP1	Agate Grey			+VD,+VG,+VL
	95B 881 313 4H0	Luxor Beige			+VE,+VH,+VM,
					+VP,+VX,+VZ
	95B 881 313 OM8	Saddle Tan			+VN
	95B 881 313 OV4	Pebble Grey			+VQ
	95B 881 313 7N0	Espresso			+VR
		Attention			
		Technical information			
		TI 7216 (98/15)			
(10)	95B 881 314	Lining	/R	1	I3PB
		Seat adjuster			
		Manually			
	95B 881 314 82V	Titanium Black			+VC,+VJ,+VF,
					+VI,+VU,+VK,
					+VO
	95B 881 314 OP1	Agate Grey			+VD,+VG,+VL
	95B 881 314 4H0	Luxor Beige			+VE,+VH,+VM,
					+VP,+VX,+VZ

Model: 95B **Model life 2014>>**

Pos	Part Number	Description	Remark	Qty	Model
	95B 881 314 OM8	Saddle Tan			+VN
	95B 881 314 OV4	Pebble Grey			+VQ
	95B 881 314 7N0	Espresso			+VR
		Attention			
		Technical information			
		TI 7216 (98/15)			
(10)	7P5 881 313 B	Lining	/L	1	IN0Q/N1A/N1B
					IN1M/N1P/N5U
					IN6D/3L3/3L4
					I3L6
		Seat adjuster			I3PB/3PH/3PN
		Door sill			
	7P5 881 313 B 82V	Titanium Black			+VC,+VJ,+VF,
					+VI,+VU,+VK,
					+VO
	7P5 881 313 B OP1	Agate Grey			+VD,+VG,+VL
	7P5 881 313 B 4H0	Luxor Beige			+VE,+VH,+VM
					+VP,+VX,+VZ
	7P5 881 313 B 7N0	Espresso			+VR
	7P5 881 313 B OV4	Pebble Grey			+VQ
	7P5 881 313 B OM8	Saddle Tan			+VN
(10)	7P5 881 314 B	Lining	/R	1	IN0Q/N1A/N1B
					IN1M/N1P/N5U
					IN6D/3L4/3L5
					I3L6
		Seat adjuster			I3PE/3PJ/3PN
		Door sill			
	7P5 881 314 B 82V	Titanium Black			+VC,+VJ,+VF,
					+VI,+VU,+VK,
					+VO
	7P5 881 314 B OP1	Agate Grey			+VD,+VG,+VL
	7P5 881 314 B 4H0	Luxor Beige			+VE,+VH,+VM,
					+VP,+VX,+VZ
	7P5 881 314 B 7N0	Espresso			+VR
	7P5 881 314 B OV4	Pebble Grey			+VQ
	7P5 881 314 B OM8	Saddle Tan			+VN
11	N 038 501 3	Expansion rivet		1	
		Lining			
		Seat adjuster			
		Manually			
12	95B 882 251	Handle		1	I3PE
		Height adjustment			
		Seat adjuster			
		Manually			
	95B 882 251 82V	Titanium Black			+VC,+VJ,+VF,
					+VI,+VU,+VK,
					+VO
	95B 882 251 OP1	Agate Grey			+VD,+VG,+VL
	95B 882 251 4H0	Luxor Beige			+VE,+VH,+VM,
					+VP,+VX,+VZ
	95B 882 251 7N0	Espresso			+VR
	95B 882 251 OV4	Pebble Grey			+VQ
	95B 882 251 OM8	Saddle Tan			+VN
14	1P0 881 253 A	Handle		1	I3PE
		Lengthways			
		Control lever			
		Seat adjuster			
		Manually			
	1P0 881 253 A 1UQ	Negro			
15	958 521 091 00	Cover		1	
		Cover			
		Seat adjuster			
		Backrest			

Model: 95B **Model life 2014>>**

Pos	Part Number	Description	Remark	Qty	Model
(16)	95B 881 457 B	Cover Cover Seat adjuster		1	IL0L/QE0/6A0
	95B 881 457 B 82V	Titanium Black			+VC,+VJ,+VF, +VI,+VU,+VK, +VO
	95B 881 457 B OP1	Agate Grey			+VD,+VG,+VL
	95B 881 457 B 4H0	Luxor Beige			+VE,+VH,+VM, +VP,+VX,+VZ
	95B 881 457 B OM8	Saddle Tan			+VN
	95B 881 457 B OV4	Pebble Grey			+VQ
	95B 881 457 B 7N0	Espresso			+VR
		Attention Technical information TI 7216 (98/15)			
(16)	95B 881 458 B	Cover Cover Seat adjuster		1	IL0R/QE0/6A0
	95B 881 458 B 82V	Titanium Black			+VC,+VJ,+VF, +VI,+VU,+VK, +VO
	95B 881 458 B OP1	Agate Grey			+VD,+VG,+VL
	95B 881 458 B 4H0	Luxor Beige			+VE,+VH,+VM, +VP,+VX,+VZ
	95B 881 458 B OM8	Saddle Tan			+VN
	95B 881 458 B OV4	Pebble Grey			+VQ
	95B 881 458 B 7N0	Espresso			+VR
		Attention Technical information TI 7216 (98/15)			
17	95B 881 507	Support Cover Cover Seat adjuster		1	IQE0/6A0
18	N 907 371 05	Outer hexagon round screw Support Cover Cover Seat adjuster		1	
19	9A7 959 747 10	Switch insert Module Seat adjuster	/L	1	IQ4P/3L5/3L6 I3PB
	9A7 959 747 10 DMN	Galvano silver			
(19)	9A7 959 748 10	Switch insert Module Seat adjuster	/R	1	IQ4P/3L5/3L6 I3PB
	9A7 959 748 10 DMN	Galvano silver			
(19)	7PP 959 747 N	Switch insert Module Front seat Seat adjuster	/L	1	IQ1G/3L4/3PH I3PN
	7PP 959 747 N DMN	Galvano silver			
(19)	7PP 959 748 N	Switch insert Module Front seat Seat adjuster	/R	1	IQ1G/3L6/3PJ I3PN
	7PP 959 748 N DMN	Galvano silver			
(19)	7PP 959 747 Q	Switch insert Module	/L	1	IQ1J/3PN

Model: 95B **Model life 2014>>**

Pos	Part Number	Description	Remark	Qty	Model
		Front seat			
		Seat adjuster			
	7PP 959 747 Q DMN	Galvano silver			
(19)	7PP 959 748 Q	Switch insert	/R	1	IQ1J/3PN
		Module			
		Front seat			
		Seat adjuster			
	7PP 959 748 Q DMN	Galvano silver			
(19)	7PP 959 747 P	Switch insert	/L	1	IQ2J/3PN
		Module			
		Front seat			
		Seat adjuster			
	7PP 959 747 P DMN	DMN			
(19)	7PP 959 748 P	Switch insert	/R	1	IQ2J/3PN
		Module			
		Front seat			
		Seat adjuster			
	7PP 959 748 P DMN	Galvano silver			
20	958 521 907 00	Repair kit		1	
		Seat adjuster			
		Front seat			

Illustration: 817-06

PORSCHE

Model: 95B **Model life 2014>>**

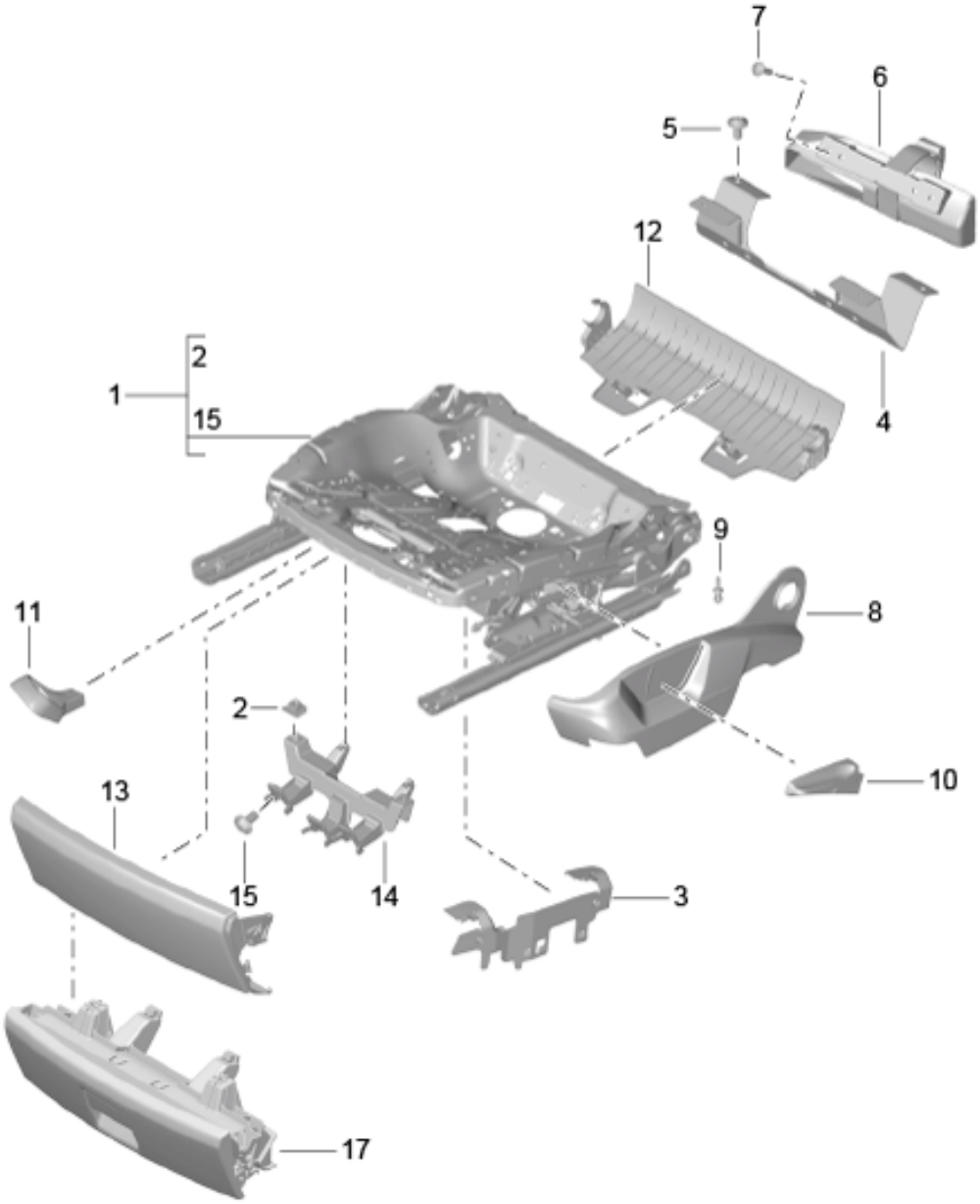

Model: 95B **Model life 2014>>**

Pos	Part Number	Description	Remark	Qty	Model
		Seat adjuster			
		Accessories			
		Cover			
1	8K0 881 105 T	Seat adjuster		1	I3L4/3L5/3L6
					I3PB/3PH/3PN
		Electric			
(1)	8K0 881 106 T	Seat adjuster		1	I3L4/3L5/3L6
					I3PE/3PJ/3PN
		Electric			
(1)	7P6 881 105 B	Seat adjuster		1	I3PE/3PJ
		Mechanical			
(1)	7P6 881 106 B	Seat adjuster		1	I3PB/3PH
		Mechanical			
2	N 900 880 03	Speed nut		1	
		Seat adjuster			
3	958 521 539 00	Reinforcement plate		1	I3PB/3PN
		Lining			
		Seat adjuster	15-		I3PB/3PH/3PN
4	958 521 285 00	Support		1	IL0R/6A7
		Fire extinguisher			
		Seat adjuster			
5	N 907 371 01	Outer hexagon round screw		1	
		Retaining bracket			
		Fire extinguisher			
		Seat adjuster			
6	7PP 882 607	Support		1	IL0L/6A7
		Fire extinguisher	15-		IL0R/6A7
		Seat adjuster			
7	N 107 148 01	Outer hexagon round screw		1	
		Support			
		Fire extinguisher			
		Seat adjuster			
8	95B 881 313	Lining	/L	1	I3PE
		Seat adjuster	15-		I3L3/3PE/3PJ
		Manually			
	95B 881 313 82V	Titanium Black			+VC,+VJ,+VF,
					+VI,+VU,+VK,
					+VO
	95B 881 313 OP1	Agate Grey			+VD,+VG,+VL
	95B 881 313 4H0	Luxor Beige			+VE,+VH,+VM
					+VP,+VX,+VZ
	95B 881 313 OM8	Saddle Tan			+VN
	95B 881 313 OV4	Pebble Grey			+VQ
	95B 881 313 7N0	Espresso			+VR
		Attention			
		Technical information			
		TI 7216 (98/15)			
(8)	95B 881 314	Lining	/R	1	I3PB
		Seat adjuster			
		Manually			
	95B 881 314 82V	Titanium Black			+VC,+VJ,+VF,
					+VI,+VU,+VK,
					+VO
	95B 881 314 OP1	Agate Grey			+VD,+VG,+VL
	95B 881 314 4H0	Luxor Beige			+VE,+VH,+VM
					+VP,+VX,+VZ
	95B 881 314 OM8	Saddle Tan			+VN
	95B 881 314 OV4	Pebble Grey			+VQ
	95B 881 314 7N0	Espresso			+VR
		Attention			
		Technical information			
		TI 7216 (98/15)			
(8)	7P5 881 313 B	Lining	/L	1	IN0Q/N1A/N1B

Model: 95B **Model life 2014>>**

Pos	Part Number	Description	Remark	Qty	Model
					IN1M/N1P/N5U
					IN6D/3L3/3L4
					I3L6
		Seat adjuster			I3PB/3PH/3PN
		Door sill			
	7P5 881 313 B 82V	Titanium Black			+VC,+VJ,+VF,
					+VI,+VU,+VK,
					+VO
	7P5 881 313 B OP1	Agate Grey			+VD,+VG,+VL
	7P5 881 313 B 4H0	Luxor Beige			+VE,+VH,+VM
					+VP,+VX,+VZ
	7P5 881 313 B 7N0	Espresso			+VR
	7P5 881 313 B OV4	Pebble Grey			+VQ
	7P5 881 313 B OM8	Saddle Tan			+VN
(8)	7P5 881 314 B	Lining	/R	1	IN0Q/N1A/N1B
					IN1M/N1P/N5U
					IN6D/3L4/3L5
					I3L6
		Seat adjuster			I3PE/3PJ/3PN
		Door sill			
	7P5 881 314 B 82V	Titanium Black			+VC,+VJ,+VF,
					+VI,+VU,+VK,
					+VO
	7P5 881 314 B OP1	Agate Grey			+VD,+VG,+VL
	7P5 881 314 B 4H0	Luxor Beige			+VE,+VH,+VM,
					+VP,+VX,+VZ
	7P5 881 314 B 7N0	Espresso			+VR
	7P5 881 314 B OV4	Pebble Grey			+VQ
	7P5 881 314 B OM8	Saddle Tan			+VN
9	N 038 501 3	Expansion rivet		1	
		Lining			
		Seat adjuster			
		Manually			
10	95B 882 251	Handle		1	I3PE
		Height adjustment			
		Seat adjuster			
		Manually			
	95B 882 251 82V	Titanium Black			+VC,+VJ,+VF,
					+VI,+VU,+VK,
					+VO
	95B 882 251 OP1	Agate Grey			+VD,+VG,+VL
	95B 882 251 4H0	Luxor Beige			+VE,+VH,+VM,
					+VP,+VX,+VZ
	95B 882 251 7N0	Espresso			+VR
	95B 882 251 OV4	Pebble Grey			+VQ
	95B 882 251 OM8	Saddle Tan			+VN
11	1P0 881 253 A	Handle		1	I3PE/3PJ
		Lengthways			
		Control lever			
		Seat adjuster			
		Manually			
	1P0 881 253 A 1UQ	Negro			
(11)	1P0 881 254 A	Handle		1	I3PB/3PH
		Lengthways			
		Control lever			
		Seat adjuster			
		Manually			
	1P0 881 254 A 1UQ	Negro			
12	958 521 091 00	Cover		1	
		Cover			
		Seat adjuster			
		Backrest			
13	95B 881 457 B	Cover		1	IL0L/QE0/6A0

Model: 95B **Model life 2014>>**

Pos	Part Number	Description	Remark	Qty	Model
		Cover			
		Seat adjuster			
	95B 881 457 B 82V	Titanium Black			+VC,+VJ,+VF,
					+VI,+VU,+VK,
					+VO
	95B 881 457 B OP1	Agate Grey			+VD,+VG,+VL
	95B 881 457 B 4H0	Luxor Beige			+VE,+VH,+VM,
					+VP,+VX,+VZ
	95B 881 457 B OM8	Saddle Tan			+VN
	95B 881 457 B OV4	Pebble Grey			+VQ
	95B 881 457 B 7N0	Espresso			+VR
		Attention			
		Technical information			
		TI 7216 (98/15)			
(13)	95B 881 458 B	Cover		1	IL0R/QE0/6A0
		Cover			
		Seat adjuster			
	95B 881 458 B 82V	Titanium Black			+VC,+VJ,+VF,
					+VI,+VU,+VK,
					+VO
	95B 881 458 B OP1	Agate Grey			+VD,+VG,+VL
	95B 881 458 B 4H0	Luxor Beige			+VE,+VH,+VM,
					+VP,+VX,+VZ
	95B 881 458 B OM8	Saddle Tan			+VN
	95B 881 458 B OV4	Pebble Grey			+VQ
	95B 881 458 B 7N0	Espresso			+VR
		Attention			
		Technical information			
		TI 7216 (98/15)			
14	95B 881 507	Support		1	IQE0/6A0
		Cover			
		Cover			
		Seat adjuster			
15	N 907 371 05	Outer hexagon round screw		1	
		Support			
		Cover			
		Cover			
		Seat adjuster			
16	7PP 959 747 N	Switch insert	/L	1	IQ1G/3L4/3PH
					I3PN
		Module			
		Front seat			
		Seat adjuster			
	7PP 959 747 N DMN	Galvano silver			
(16)	7PP 959 748 N	Switch insert	/R	1	IQ1G/3L6/3PJ
					I3PN
		Module			
		Front seat			
		Seat adjuster			
	7PP 959 748 N DMN	Galvano silver			
(16)	7PP 959 747 Q	Switch insert	/L	1	IQ1J/3PN
		Module			
		Front seat			
		Seat adjuster			
	7PP 959 747 Q DMN	Galvano silver			
(16)	7PP 959 748 Q	Switch insert	/R	1	IQ1J/3PN
		Module			
		Front seat			
		Seat adjuster			
	7PP 959 748 Q DMN	Galvano silver			
(16)	7PP 959 747 P	Switch insert	/L	1	IQ2J/3PN
		Module			
		Front seat			

Model: 95B **Model life 2014>>**

Pos	Part Number	Description	Remark	Qty	Model
		Seat adjuster			
	7PP 959 747 P DMN	DMN			
(16)	7PP 959 748 P	Switch insert	/R	1	IQ2J/3PN
		Module			
		Front seat			
		Seat adjuster			
	7PP 959 748 P DMN	Galvano silver			
17	958 521 400 00	Cover		1	IL0L/QE1/6A0
		Cover			
		Seat adjuster			
	958 521 400 00 82V	Titanium Black			+VC,+VJ,+VF,
					+VI,+VU,+VK,
					+VO
	958 521 400 00 OP1	Agate Grey			+VD,+VG,+VL
	958 521 400 00 4H0	Luxor Beige			+VE,+VH,+VM,
					+VP,+VX,+VZ
	958 521 400 00 OM8	Saddle Tan			+VN
	958 521 400 00 OV4	Pebble Grey			+VQ
	958 521 400 00 7N0	Espresso			+VR
(17)	8K0 882 601 B	Drawer		1	IL0R/QE1/6A0
		Flap control box			
	8K0 882 601 B 82V	Titanium Black			+VC,+VJ,+VF,
					+VI,+VU,+VK,
					+VO
	8K0 882 601 B OP1	Agate Grey			+VD,+VG,+VL,
	8K0 882 601 B 4H0	Luxor Beige			+VE,+VH,+VM,
					+VP,+VX,+VZ
	8K0 882 601 B OM8	Saddle Tan			+VN
	8K0 882 601 B OV4	Pebble Grey			+VQ
	8K0 882 601 B 7N0	Espresso			+VR
(17)	9A7 882 602 B	Drawer		1	IL0L/QE1/3PB
					I3PH/6A0
		Flap control box			
	9A7 882 602 B 82V	Black			+VC,+VF,+VI
					+VU,+FA,+FL
					+FE,+FF,+FN
					+FK,+VK,+VO
	9A7 882 602 B OP1	Agate Grey			+VD,+VG,+FB
					+FM,+VL
	9A7 882 602 B 4H0	Luxor Beige			+VE,+VX,+VH
					+VZ,+FC,+FH
					+VM,+VP
	9A7 882 602 B OM8	Saddle Tan			+FI,+VN
	9A7 882 602 B OV4	Pebble Grey			+VQ
	9A7 882 602 B 7N0	Espresso			+VR

Illustration: 817-07

PORSCHE

Model: 95B **Model life 2014>>**

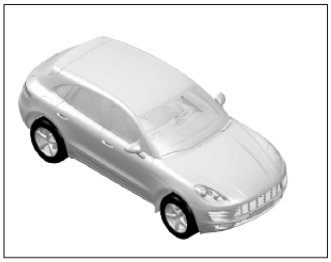

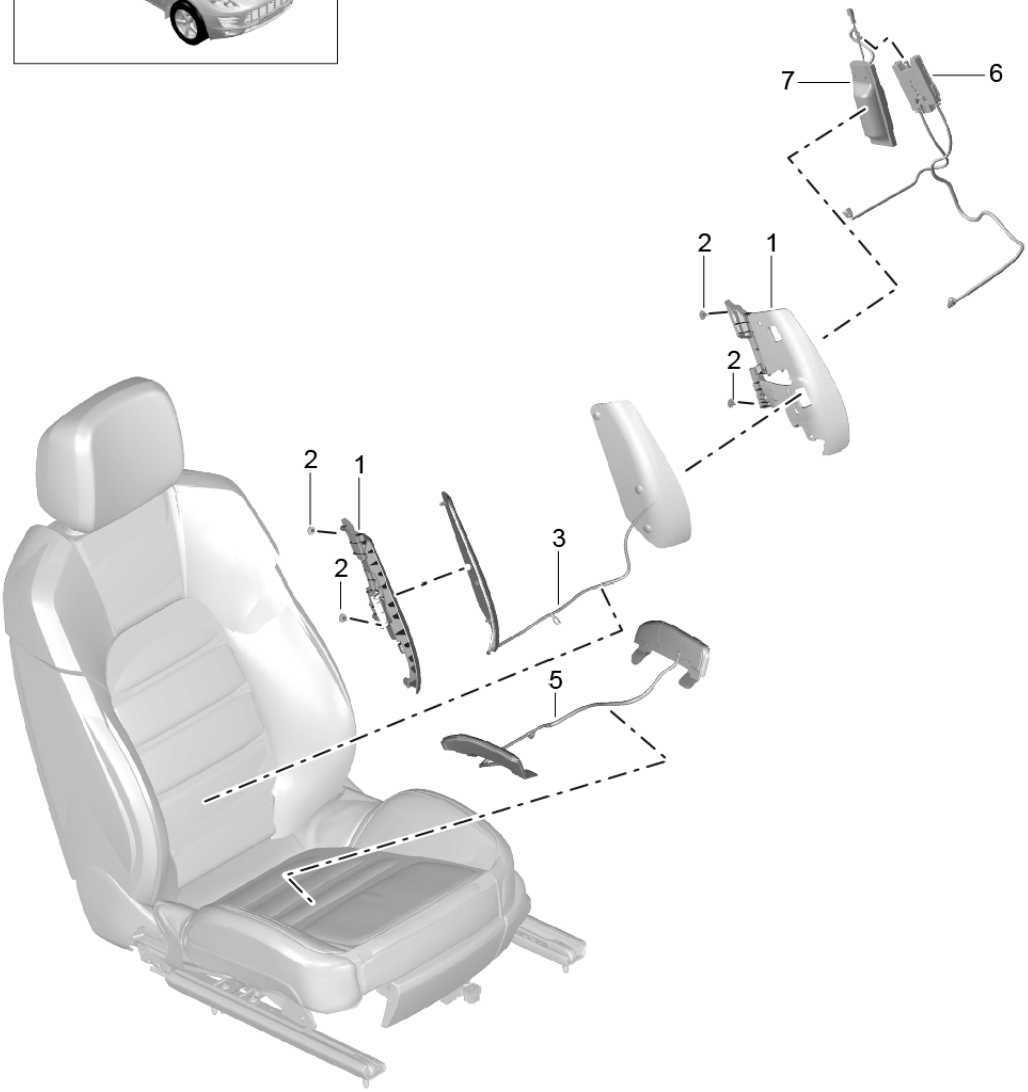

Model: 95B **Model life 2014>>**

Pos	Part Number	Description	Remark	Qty	Model
		Lumbar support adjustment			
		Seat and backrest surface			
		Accessories			
1	958 521 354 00	Backrest side bolster	/R	1	IQ1J
		Supporting plate			
		Lumbar support			
		Backrest			
(1)	958 521 353 00	Backrest side bolster	/L	1	IQ1J
		Supporting plate			
		Lumbar support			
		Backrest			
2	N 103 545 03	Outer hexagon round screw		1	
		Supporting plate			
		Lumbar support			
		Backrest			
3	958 521 351 00	Airbag		1	IQ1J
		Lumbar support			
		Backrest			
5	958 521 357 00	Insert		1	IQ1J
		Airbag			
		Lumbar support			
		Seat surface			
6	958 521 356 01	Valve block		1	IQ1J
		Lumbar support			
7	958 521 355 02	Pump		1	IQ1J
		Lumbar support			
8	9A7 898 173	Repair kit		1	
		Lumbar			

Illustration: 817-10

PORSCHE

Model: 95B **Model life 2014>>**

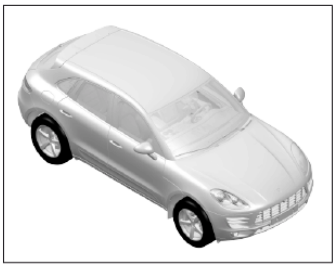

Model: 95B **Model life 2014>>**

Pos	Part Number	Description	Remark	Qty	Model
		Cover			
		Backrest cover			
		Cover for cushion			
		Foam part			
1	95B 881 405 R	Cover for cushion	/L	1	IN6D/Q1G/3PE
		Alcantara			
	95B 881 405 R YAI	Black			+VC
	95B 881 405 R YBI	Agate Grey			+VD
	95B 881 405 R YCI	Luxor Beige			+VE,+VX
1	95B 881 405 R	Cover for cushion	/L	1	IN6D/Q1G/3PJ
		Alcantara			
	95B 881 405 R YAI	Black			+VC
	95B 881 405 R YBI	Agate Grey			+VD
	95B 881 405 R YCI	Luxor Beige			+VE,+VX
(1)	95B 881 406 R	Cover for cushion	/R	1	IN6D/Q1G/3PB
		Alcantara			
	95B 881 406 R YAI	Black			+VC
	95B 881 406 R YBI	Agate Grey			+VD
	95B 881 406 R YCI	Luxor Beige			+VE,+VX
(1)	95B 881 406 R	Cover for cushion	/R	1	IN6D/Q1G/3PH
		Alcantara			
	95B 881 406 R YAI	Black			+VC
	95B 881 406 R YBI	Agate Grey			+VD
	95B 881 406 R YCI	Luxor Beige			+VE,+VX
(1)	95B 881 405 S	Cover for cushion	/L	1	IN4M/Q1G/3PE
	95B 881 405 S YDI	Black			+VF
	95B 881 405 S YEI	Agate Grey			+VG
	95B 881 405 S YFI	Luxor Beige			+VH,+VZ
	95B 881 405 S YHI	Black/Carrera Red			+VI
	95B 881 405 S YGI	Black/Saddle Tan			+VJ
(1)	95B 881 405 S	Cover for cushion	/L	1	IN4M/Q1G/3PJ
	95B 881 405 S YDI	Black			+VF
	95B 881 405 S YEI	Agate Grey			+VG
	95B 881 405 S YFI	Luxor Beige			+VH,+VZ
	95B 881 405 S YHI	Black/Carrera Red			+VI
	95B 881 405 S YGI	Black/Saddle Tan			+VJ
(1)	95B 881 406 S	Cover for cushion	/R	1	IN4M/Q1G/3PB
	95B 881 406 S YDI	Black			+VF
	95B 881 406 S YEI	Agate Grey			+VG
	95B 881 406 S YFI	Luxor Beige			+VH,+VZ
	95B 881 406 S YHI	Black/Carrera Red			+VI
	95B 881 406 S YGI	Black/Saddle Tan			+VJ
(1)	95B 881 406 S	Cover for cushion	/R	1	IN4M/Q1G/3PH
	95B 881 406 S YDI	Black			+VF
	95B 881 406 S YEI	Agate Grey			+VG
	95B 881 406 S YFI	Luxor Beige			+VH,+VZ
	95B 881 406 S YHI	Black/Carrera Red			+VI
	95B 881 406 S YGI	Black/Saddle Tan			+VJ
(1)	95B 881 405 B	Cover for cushion	/L	1	IN5U/Q1G/3PB
	95B 881 405 B D0D	Black			+VK
	95B 881 405 B YKI	Agate Grey			+VL
	95B 881 405 B D0F	Luxor Beige			+VM,+VP
	95B 881 405 B YMI	Saddle Tan			+VN
	95B 881 405 B YPI	Pebble Grey			+VQ
(1)	95B 881 405 B	Cover for cushion	/L	1	IN5U/Q1G/3PH
	95B 881 405 B D0D	Black			+VK
	95B 881 405 B YKI	Agate Grey			+VL
	95B 881 405 B D0F	Luxor Beige			+VM,+VP
	95B 881 405 B YMI	Saddle Tan			+VN
	95B 881 405 B YPI	Pebble Grey			+VQ
(1)	95B 881 406 B	Cover for cushion	/R	1	IN5U/Q1G/3PE
	95B 881 406 B D0D	Black			+VK
	95B 881 406 B YKI	Agate Grey			+VL

Model: 95B **Model life 2014>>**

Pos	Part Number	Description	Remark	Qty	Model
	95B 881 406 B D0F	Luxor Beige			+VM,+VP
	95B 881 406 B YMI	Saddle Tan			+VN
	95B 881 406 B YPI	Pebble Grey			+VQ
(1)	95B 881 406 B	Cover for cushion	/R	1	IN5U/Q1G/3PJ
	95B 881 406 B D0D	Black			+VK
	95B 881 406 B YKI	Agate Grey			+VL
	95B 881 406 B D0F	Luxor Beige			+VM,+VP
	95B 881 406 B YMI	Saddle Tan			+VN
	95B 881 406 B YPI	Pebble Grey			+VQ
(1)	95B 881 405 C	Cover for cushion	/L 15-	1	IN1P/Q1G/3PB
	95B 881 405 C D0L	Espresso			+VR
(1)	95B 881 405 C	Cover for cushion	/L 15-	1	IN1P/Q1G/3PH
	95B 881 405 C D0L	Espresso			+VR
(1)	95B 881 406 C	Cover for cushion	/R 15-	1	IN1P/Q1G/3PE
	95B 881 406 C D0L	Espresso			+VR
(1)	95B 881 406 C	Cover for cushion	/R 15-	1	IN1P/Q1G/3PJ
	95B 881 406 C D0L	Espresso			+VR
(1)	95B 881 405 D	Cover for cushion	/L	1	IN5U/Q2J/3PN
	95B 881 405 D D0D	Black			+VC,+VE,+VF, +VK
	95B 881 405 D YKI	Agate Grey			+VD,+VG,+VL
	95B 881 405 D D0F	Luxor Beige			+VH,+VM,+VP, +VX,+VZ
	95B 881 405 D YMI	Saddle Tan			+VJ,+VN
	95B 881 405 D YPI	Pebble Grey			+VQ
(1)	95B 881 406 D	Cover for cushion	/R	1	IN5U/Q2J/3PN
	95B 881 406 D D0D	Black			+VC,+VE,+VF, +VK
	95B 881 406 D YKI	Agate Grey			+VD,+VG,+VL
	95B 881 406 D D0F	Luxor Beige			+VH,+VM,+VP, +VX,+VZ
	95B 881 406 D YMI	Saddle Tan			+VJ,+VN
	95B 881 406 D YPI	Pebble Grey			+VQ
(1)	95B 881 405 E	Cover for cushion	/L	1	IN0Q/Q2J/3PN
	95B 881 405 E D0D	Black			+VC,+VE,+VF, +VK
	95B 881 405 E YKI	Agate Grey			+VD,+VG,+VL
	95B 881 405 E D0F	Luxor Beige			+VH,+VM,+VP, +VX,+VZ
	95B 881 405 E YMI	Saddle Tan			+VJ,+VN
	95B 881 405 E YPI	Pebble Grey			+VQ
(1)	95B 881 406 E	Cover for cushion	/R	1	IN0Q/Q2J/3PN
	95B 881 406 E D0D	Black			+VC,+VE,+VF, +VK
	95B 881 406 E YKI	Agate Grey			+VD,+VG,+VL
	95B 881 406 E D0F	Luxor Beige			+VH,+VM,+VP, +VX,+VZ
	95B 881 406 E YMI	Saddle Tan			+VJ,+VN
	95B 881 406 E YPI	Pebble Grey			+VQ
(1)	95B 881 406 AM	Cover for cushion	/R 17-	1	IN2S/Q1J/9P3 I9P6
		GTS			
	95B 881 406 AM IVA	Black			+FA,+FL,+FF
	95B 881 406 AM DJM	Agate Grey			+FB,+FM
	95B 881 406 AM IVC	Luxor Beige			+FC,+FH
	95B 881 406 AM IVE	Black/Carmine Red			+FL
	95B 881 406 AM DJP	Black/Rhodium Silver			+FE,+TS
	95B 881 406 AM DJN	Saddle Tan			+FI
	95B 881 406 AM HYO	Black/Carrera Red			+TR
(1)	95B 881 405 F	Cover for cushion	/L 15-	1	IN1P/Q2J/3PN
	95B 881 405 F D0L	Espresso			+VR
(1)	95B 881 406 F	Cover for cushion	/R 15-	1	IN1P/Q2J/3PN
	95B 881 406 F D0L	Espresso			+VR

Model: 95B **Model life 2014>>**

Pos	Part Number	Description	Remark	Qty	Model
(1)	95B 881 405 G	Cover for cushion	/L 15-	1	IN1A/Q2J/3PN
	95B 881 405 G D0L	Espresso			+VR
(1)	95B 881 406 G	Cover for cushion	/R 15-	1	IN1A/Q2J/3PN
	95B 881 406 G D0L	Espresso			+VR
(1)	95B 881 405 H	Cover for cushion	/L	1	IN5U/Q1J/3PN
	95B 881 405 H D0D	Black			+VC,+VE,+VF,
					+VK
	95B 881 405 H YKI	Agate Grey			+VD,+VG,+VL
	95B 881 405 H D0F	Luxor Beige			+VH,+VM,+VP,
					+VX,+VZ
	95B 881 405 H YMI	Saddle Tan			+VJ,+VN
	95B 881 405 H YPI	Pebble Grey			+VQ
(1)	95B 881 406 H	Cover for cushion	/R	1	IN5U/Q1J/3PN
	95B 881 406 H D0D	Black			+VC,+VE,+VF,
					+VK
	95B 881 406 H YKI	Agate Grey			+VD,+VG,+VL
	95B 881 406 H D0F	Luxor Beige			+VH,+VM,+VP,
					+VX,+VZ
	95B 881 406 H YMI	Saddle Tan			+VJ,+VN
	95B 881 406 H YPI	Pebble Grey			+VQ
(1)	95B 881 405 J	Cover for cushion	/L	1	IN0Q/Q1J/3PN
	95B 881 405 J D0D	Black			+VC,+VE,+VF,
					+VK
	95B 881 405 J YKI	Agate Grey			+VD,+VG,+VL
	95B 881 405 J D0F	Luxor Beige			+VH,+VM,+VP,
					+VX,+VZ
	95B 881 405 J YMI	Saddle Tan			+VJ,+VN
	95B 881 405 J YPI	Pebble Grey			+VQ
(1)	95B 881 406 J	Cover for cushion	/R	1	IN0Q/Q1J/3PN
	95B 881 406 J D0D	Black			+VC,+VJ,+VF,
					+VK
	95B 881 406 J YKI	Agate Grey			+VD,+VG,+VL
	95B 881 406 J D0F	Luxor Beige			+VH,+VM,+VP,
					+VX,+VZ
	95B 881 406 J YMI	Saddle Tan			+VJ,+VN
	95B 881 406 J YPI	Pebble Grey			+VQ
(1)	95B 881 405 K	Cover for cushion	/L 15-	1	IN1P/Q1J/3PN
	95B 881 405 K D0L	Espresso			+VR
(1)	95B 881 406 K	Cover for cushion	/R 15-	1	IN1P/Q1J/3PN
	95B 881 406 K D0L	Espresso			+VR
(1)	95B 881 405 L	Cover for cushion	/L 15-	1	IN1A/Q1J/3PN
	95B 881 405 L D0L	Espresso			+VR
(1)	95B 881 406 L	Cover for cushion	/R 15-	1	IN1A/Q1J/3PN
	95B 881 406 L D0L	Espresso			+VR
(1)	95B 881 405 M	Cover for cushion	/L	1	IN6D/Q1G/3L4
					I3L5/3L6/3PB
		Alcantara			
	95B 881 405 M YAI	Black			+VC
	95B 881 405 M YBI	Agate Grey			+VD
	95B 881 405 M YCI	Luxor Beige			+VE,+VX
		Information available			
(1)	95B 881 405 M	Cover for cushion	/L	1	IN6D/Q1G/3PH
		Alcantara			
	95B 881 405 M YAI	Black			+VC
	95B 881 405 M YBI	Agate Grey			+VD
	95B 881 405 M YCI	Luxor Beige			+VE,+VX
		Information available			
(1)	95B 881 406 M	Cover for cushion	/R	1	IN6D/Q1G/3L4
					I3L5/9P3/9P6
		Alcantara			
	95B 881 406 M YAI	Black			+VC
	95B 881 406 M YBI	Agate Grey			+VD
	95B 881 406 M YCI	Luxor Beige			+VE,+VX

Model: 95B **Model life 2014>>**

Pos	Part Number	Description	Remark	Qty	Model
(1)	95B 881 406 M	Cover for cushion	/R	1	IN6D/Q1G/3L6
					I3PE/3PJ
		Alcantara			
	95B 881 406 M YAI	Black			+VC
	95B 881 406 M YBI	Agate Grey			+VD
	95B 881 406 M YCI	Luxor Beige			+VE,+VX
(1)	95B 881 406 M	Cover for cushion	/R	1	IN6D/Q1G/3L4
					I3L5/9P7
		Alcantara			
	95B 881 406 M YAI	Black			+VC
	95B 881 406 M YBI	Agate Grey			+VD
	95B 881 406 M YCI	Luxor Beige			+VE,+VX
(1)	95B 881 405 N	Cover for cushion	/L	1	IN4M/Q1G/3PB
	95B 881 405 N YDI	Black			+VF
	95B 881 405 N YEI	Agate Grey			+VG
	95B 881 405 N YFI	Luxor Beige			+VH,+VZ
	95B 881 405 N YHI	Black/Carrera Red			+VI
	95B 881 405 N YGI	Black/Saddle Tan			+VJ
(1)	95B 881 405 N	Cover for cushion	/L	1	IN4M/Q1G/3PH
	95B 881 405 N YDI	Black			+VF
	95B 881 405 N YEI	Agate Grey			+VG
	95B 881 405 N YFI	Luxor Beige			+VH,+VZ
	95B 881 405 N YHI	Black/Carrera Red			+VI
	95B 881 405 N YGI	Black/Saddle Tan			+VJ
(1)	95B 881 406 N	Cover for cushion	/R	1	IN4M/Q1G/3PE
	95B 881 406 N YDI	Black			+VF
	95B 881 406 N YEI	Agate Grey			+VG
	95B 881 406 N YFI	Luxor Beige			+VH,+VZ
	95B 881 406 N YHI	Black/Carrera Red			+VI
	95B 881 406 N YGI	Black/Saddle Tan			+VJ
(1)	95B 881 406 N	Cover for cushion	/R	1	IN4M/Q1G/3PJ
	95B 881 406 N YDI	Black			+VF
	95B 881 406 N YEI	Agate Grey			+VG
	95B 881 406 N YFI	Luxor Beige			+VH,+VZ
	95B 881 406 N YHI	Black/Carrera Red			+VI
	95B 881 406 N YGI	Black/Saddle Tan			+VJ
(1)	95B 881 405 T	Cover for cushion	/L	1	IN5U/Q1G/3PE
	95B 881 405 T D0D	Black			+VK
	95B 881 405 T YKI	Agate Grey			+VL
	95B 881 405 T D0F	Luxor Beige			+VM,+VP
	95B 881 405 T YMI	Saddle Tan			+VN
	95B 881 405 T YPI	Pebble Grey			+VQ
(1)	95B 881 405 T	Cover for cushion	/L	1	IN5U/Q1G/3PJ
	95B 881 405 T D0D	Black			+VK
	95B 881 405 T YKI	Agate Grey			+VL
	95B 881 405 T D0F	Luxor Beige			+VM,+VP
	95B 881 405 T YMI	Saddle Tan			+VN
	95B 881 405 T YPI	Pebble Grey			+VQ
(1)	95B 881 406 T	Cover for cushion	/R	1	IN5U/Q1G/3PB
	95B 881 406 T D0D	Black			+VK
	95B 881 406 T YKI	Agate Grey			+VL
	95B 881 406 T D0F	Luxor Beige			+VM,+VP
	95B 881 406 T YMI	Saddle Tan			+VN
	95B 881 406 T YPI	Pebble Grey			+VQ
(1)	95B 881 406 T	Cover for cushion	/R	1	IN5U/Q1G/3PH
	95B 881 406 T D0D	Black			+VK
	95B 881 406 T YKI	Agate Grey			+VL
	95B 881 406 T D0F	Luxor Beige			+VM,+VP
	95B 881 406 T YMI	Saddle Tan			+VN
	95B 881 406 T YPI	Pebble Grey			+VQ
(1)	95B 881 405 AA	Cover for cushion	/L 15-	1	IN1P/Q1G/3PE
	95B 881 405 AA D0L	Espresso			+VR
(1)	95B 881 405 AA	Cover for cushion	/L 15-	1	IN1P/Q1G/3PJ

Model: 95B **Model life 2014>>**

Pos	Part Number	Description	Remark	Qty	Model
	95B 881 405 AA D0L	Espresso			+VR
(1)	95B 881 406 AA	Cover for cushion	/R 15-	1	IN1P/Q1G/3PB
	95B 881 406 AA D0L	Espresso			+VR
(1)	95B 881 406 AA	Cover for cushion	/R 15-	1	IN1P/Q1G/3PH
	95B 881 406 AA D0L	Espresso			+VR
(1)	95B 881 405 AC	Cover for cushion	/L 15-	1	IN1M/Q2J/3PN
		Leather			
		two-colour			
	95B 881 405 AC AAB	Black/Carrera Red			+VU,+VO
(1)	95B 881 406 AC	Cover for cushion	/R 15-	1	IN1M/Q2J/3PN
		Leather			
		two-colour			
	95B 881 406 AC AAB	Black/Carrera Red			+VU,+VO
(1)	95B 881 405 AD	Cover for cushion	/L 15-	1	IN1B/Q2J/3PN
		Leather			
		two-colour			
	95B 881 405 AD AAB	Black/Carrera Red			+VU,+VO
(1)	95B 881 406 AD	Cover for cushion	/R 15-	1	IN1B/Q2J/3PN
		Leather			
		two-colour			
	95B 881 406 AD AAB	Black/Carrera Red			+VU,+VO
(1)	95B 881 405 AE	Cover for cushion	/L 15-	1	IN1M/Q1J/3PN
		Leather			
		two-colour			
	95B 881 405 AE AAB	Black/Carrera Red			+VU,+VO
(1)	95B 881 406 AE	Cover for cushion	/R 15-	1	IN1M/Q1J/3PN
		Leather			
		two-colour			
	95B 881 406 AE AAB	Black/Carrera Red			+VU,+VO
(1)	95B 881 405 AF	Cover for cushion	/L 15-	1	IN1B/Q1J/3PN
		Leather			
		two-colour			
	95B 881 405 AF AAB	Black/Carrera Red			+VU,+VO
(1)	95B 881 406 AF	Cover for cushion	/R 15-	1	IN1B/Q1J/3PN
		Leather			
		two-colour			
	95B 881 406 AF AAB	Black/Carrera Red			+VU,+VO
(1)	95B 881 405 AG	Cover for cushion	/L 15-	1	IN1M/Q1G/3PE
		Leather			
		two-colour			
	95B 881 405 AG AAB	Black/Carrera Red			+VU,+VO
(1)	95B 881 405 AG	Cover for cushion	/L 15-	1	IN1M/Q1G/3PJ
		Leather			
		two-colour			
	95B 881 405 AG AAB	Black/Carrera Red			+VU,+VO
(1)	95B 881 406 AG	Cover for cushion	/R 15-	1	IN1M/Q1G/3PB
		Leather			
		two-colour			
	95B 881 406 AG AAB	Black/Carrera Red			+VU,+VO
(1)	95B 881 406 AG	Cover for cushion	/R 15-	1	IN1M/Q1G/3PH
		Leather			
		two-colour			
	95B 881 406 AG AAB	Black/Carrera Red			+VU,+VO
2	95B 881 805 F	Backrest cover	/L 15-	1	IN1A/Q1J
	95B 881 805 F D0L	Espresso			+VR
(2)	95B 881 806 F	Backrest cover	/R 15-	1	IN1A/Q1J
	95B 881 806 F D0L	Espresso			+VR
(2)	95B 881 805 B	Backrest cover	/L	1	IN5U/Q1G
	95B 881 805 B D0D	Black			+VC,+VE,+VF,
					+VK
	95B 881 805 B YKI	Agate Grey			+VD,+VG,+VL
	95B 881 805 B D0F	Luxor Beige			+VH,+VM,+VP,
					+VX,+VZ

Model: 95B **Model life 2014>>**

Pos	Part Number	Description	Remark	Qty	Model
	95B 881 805 B YMI	Saddle Tan			+VJ,+VN
	95B 881 805 B YPI	Pebble Grey			+VQ
(2)	95B 881 805 B	Backrest cover	/L	1	IN5U/Q2J
	95B 881 805 B D0D	Black			+VC,+VE,+VF, +VK
	95B 881 805 B YKI	Agate Grey			+VD,+VG,+VL
	95B 881 805 B D0F	Luxor Beige			+VH,+VM,+VP, +VX,+VZ
	95B 881 805 B YMI	Saddle Tan			+VJ,+VN
	95B 881 805 B YPI	Pebble Grey			+VQ
(2)	95B 881 806 B	Backrest cover	/R	1	IN5U/Q1G
	95B 881 806 B D0D	Black			+VC,+VE,+VF, +VK
	95B 881 806 B YKI	Agate Grey			+VD,+VG,+VL
	95B 881 806 B D0F	Luxor Beige			+VH,+VM,+VP, +VX,+VZ
	95B 881 806 B YMI	Saddle Tan			+VJ,+VN
	95B 881 806 B YPI	Pebble Grey			+VQ
(2)	95B 881 806 B	Backrest cover	/R	1	IN5U/Q2J
	95B 881 806 B D0D	Black			+VC,+VE,+VF, +VK
	95B 881 806 B YKI	Agate Grey			+VD,+VG,+VL
	95B 881 806 B D0F	Luxor Beige			+VH,+VM,+VP, +VX,+VZ
	95B 881 806 B YMI	Saddle Tan			+VJ,+VN
	95B 881 806 B YPI	Pebble Grey			+VQ
(2)	95B 881 805 B	Backrest cover	/L	1	IN5U/Q2J
	95B 881 805 B D0D	Black			+VC,+VE,+VF, +VK
	95B 881 805 B YKI	Agate Grey			+VD,+VG,+VL
	95B 881 805 B D0F	Luxor Beige			+VH,+VM,+VP, +VX,+VZ
	95B 881 805 B YMI	Saddle Tan			+VJ,+VN
	95B 881 805 B YPI	Pebble Grey			+VQ
(2)	95B 881 805 C	Backrest cover	/L	1	IN0Q/Q2J
	95B 881 805 C D0D	Black			+VC,+VE,+VF, +VK
	95B 881 805 C YKI	Agate Grey			+VD,+VG,+VL
	95B 881 805 C D0F	Luxor Beige			+VH,+VM,+VP, +VX,+VZ
	95B 881 805 C YMI	Saddle Tan			+VJ,+VN
	95B 881 805 C YPI	Pebble Grey			+VQ
(2)	95B 881 806 C	Backrest cover	/R	1	IN0Q/Q2J
	95B 881 806 C D0D	Black			+VC,+VE,+VF, +VK
	95B 881 806 C YKI	Agate Grey			+VD,+VG,+VL
	95B 881 806 C D0F	Luxor Beige			+VH,+VM,+VP, +VX,+VZ
	95B 881 806 C YMI	Saddle Tan			+VJ,+VN
	95B 881 806 C YPI	Pebble Grey			+VQ
(2)	95B 881 805 G	Backrest cover	/L 15-	1	IN1P/Q1G
	95B 881 805 G D0L	Espresso			+VR
(2)	95B 881 805 G	Backrest cover	/L 15-	1	IN1P/Q2J
	95B 881 805 G D0L	Espresso			+VR
(2)	95B 881 806 G	Backrest cover	/R 15-	1	IN1P/Q1G
	95B 881 806 G D0L	Espresso			+VR
(2)	95B 881 806 G	Backrest cover	/R 15-	1	IN1P/Q2J
	95B 881 806 G D0L	Espresso			+VR
(2)	95B 881 805 H	Backrest cover	/L 15-	1	IN1A/Q2J
	95B 881 805 H D0L	Espresso			+VR
(2)	95B 881 806 H	Backrest cover	/R 15-	1	IN1A/Q2J
	95B 881 806 H D0L	Espresso			+VR
(2)	95B 881 805 D	Backrest cover	/L	1	IN5U/Q1J

Model: 95B **Model life 2014>>**

Pos	Part Number	Description	Remark	Qty	Model
	95B 881 805 D D0D	Black			+VC,+VE,+VF, +VK
	95B 881 805 D YKI	Agate Grey			+VD,+VG,+VL
	95B 881 805 D D0F	Luxor Beige			+VH,+VM,+VP, +VX,+VZ
	95B 881 805 D YMI	Saddle Tan			+VJ,+VN
	95B 881 805 D YPI	Pebble Grey			+VQ
(2)	95B 881 806 D	Backrest cover	/R	1	IN5U/Q1J
	95B 881 806 D D0D	Black			+VC,+VE,+VF, +VK
	95B 881 806 D YKI	Agate Grey			+VD,+VG,+VL
	95B 881 806 D D0F	Luxor Beige			+VH,+VM,+VP, +VX,+VZ
	95B 881 806 D YMI	Saddle Tan			+VJ,+VN
	95B 881 806 D YPI	Pebble Grey			+VQ
(2)	95B 881 805 E	Backrest cover	/L	1	IN0Q/Q1J
	95B 881 805 E D0D	Black			+VC,+VE,+VF, +VK
	95B 881 805 E YKI	Agate Grey			+VD,+VG,+VL
	95B 881 805 E D0F	Luxor Beige			+VH,+VM,+VP, +VX,+VZ
	95B 881 805 E YMI	Saddle Tan			+VJ,+VN
	95B 881 805 E YPI	Pebble Grey			+VQ
(2)	95B 881 806 E	Backrest cover	/R	1	IN0Q/Q1J
	95B 881 806 E D0D	Black			+VC,+VE,+VF, +VK
	95B 881 806 E YKI	Agate Grey			+VD,+VG,+VL
	95B 881 806 E D0F	Luxor Beige			+VH,+VM,+VP, +VX,+VZ
	95B 881 806 E YMI	Saddle Tan			+VJ,+VN
	95B 881 806 E YPI	Pebble Grey			+VQ
(2)	95B 881 805 J	Backrest cover	/L 15-	1	IN1P/Q1J
	95B 881 805 J D0L	Espresso			+VR
(2)	95B 881 806 J	Backrest cover	/R 15-	1	IN1P/Q1J
	95B 881 806 J D0L	Espresso			+VR
(2)	95B 881 805	Backrest cover Alcantara	/L	1	IN6D/Q1G
	95B 881 805 YAI	Black			+VC
	95B 881 805 YBI	Agate Grey			+VD
	95B 881 805 YCI	Luxor Beige			+VE,+VX
(2)	95B 881 806	Backrest cover Alcantara	/R	1	IN6D/Q1G
	95B 881 806 YAI	Black			+VC
	95B 881 806 YBI	Agate Grey			+VD
	95B 881 806 YCI	Luxor Beige			+VE,+VX
(2)	95B 881 805 A	Backrest cover	/L	1	IN4M/Q1G
	95B 881 805 A YDI	Black			+VF
	95B 881 805 A YEI	Agate Grey			+VG
	95B 881 805 A YFI	Luxor Beige			+VH,+VZ
	95B 881 805 A YHI	Black/Carrera Red			+VI
	95B 881 805 A YGI	Black/Saddle Tan			+VJ
(2)	95B 881 806 A	Backrest cover	/R	1	IN4M/Q1G
	95B 881 806 A YDI	Black			+VF
	95B 881 806 A YEI	Agate Grey			+VG
	95B 881 806 A YFI	Luxor Beige			+VH,+VZ
	95B 881 806 A YHI	Black/Carrera Red			+VI
	95B 881 806 A YGI	Black/Saddle Tan			+VJ
(2)	95B 881 805 K	Backrest cover	/L	1	IN1M/Q1G
	95B 881 805 K AAB	Black/Carrera Red			+VU,+VO
(2)	95B 881 805 K	Backrest cover	/L	1	IN1M/Q2J
	95B 881 805 K AAB	Black/Carrera Red			+VU,+VO
(2)	95B 881 806 K	Backrest cover	/R	1	IN1M/Q1G
	95B 881 806 K AAB	Black/Carrera Red			+VU,+VO

Model: 95B **Model life 2014>>**

Pos	Part Number	Description	Remark	Qty	Model
(2)	95B 881 806 K	Backrest cover	/R	1	IN1M/Q2J
	95B 881 806 K AAB	Black/Carrera Red			+VU,+VO
(2)	95B 881 805 L	Backrest cover	/L	1	IN1B/Q2J
	95B 881 805 L AAB	Black/Carrera Red			+VU,+VO
(2)	95B 881 806 L	Backrest cover	/R	1	IN1B/Q2J
	95B 881 806 L AAB	Black/Carrera Red			+VU,+VO
(2)	95B 881 805 M	Backrest cover	/L	1	IN1M/Q1J
	95B 881 805 M AAB	Black/Carrera Red			+VU,+VO
(2)	95B 881 806 M	Backrest cover	/R	1	IN1M/Q1J
	95B 881 806 M AAB	Black/Carrera Red			+VU,+VO
(2)	95B 881 805 N	Backrest cover	/L	1	IN1B/Q1J
	95B 881 805 N AAB	Black/Carrera Red			+VU,+VO
(2)	95B 881 806 N	Backrest cover	/R	1	IN1B/Q1J
	95B 881 806 N AAB	Black/Carrera Red			+VU,+VO
3	958 521 771 00	Foam part	/L	1	IN1P/Q1G/4A0
		Backrest			
(3)		Foam part	/L	1	IN4M/Q1G/4A0
		Backrest			
(3)		Foam part	/L	1	IN5U/Q1G/4A0
		Backrest			
(3)		Foam part	/L	1	IN6D/Q1G/4A0
		Backrest			
(3)		Foam part	/L	1	IN1P/Q2J/4A0
		Backrest			
(3)		Foam part	/L	1	IN4M/Q2J/4A0
		Backrest			
(3)		Foam part	/L	1	IN5U/Q2J/4A0
		Backrest			
(3)		Foam part	/L	1	IN6D/Q2J/4A0
		Backrest			
(3)		Foam part	/L	1	IN1M/Q2J/4A0
		Backrest			
(3)	958 521 772 00	Foam part	/R	1	IN1P/Q1G/4A0
		Backrest			
(3)		Foam part	/R	1	IN4M/Q1G/4A0
		Backrest			
(3)		Foam part	/R	1	IN5U/Q1G/4A0
		Backrest			
(3)		Foam part	/R	1	IN6D/Q1G/4A0
		Backrest			
(3)		Foam part	/R	1	IN1P/Q2J/4A0
		Backrest			
(3)		Foam part	/R	1	IN4M/Q2J/4A0
		Backrest			
(3)		Foam part	/R	1	IN5U/Q2J/4A0
		Backrest			
(3)		Foam part	/R	1	IN6D/Q2J/4A0
		Backrest			
(3)		Foam part	/R	1	IN1M/Q2J/4A0
		Backrest			
(3)	958 521 779 00	Foam part	/L	1	IN1P/Q1G/4A3
					I4A4
		Backrest			
(3)		Foam part	/L	1	IN4M/Q1G/4A3
					I4A4
		Backrest			
(3)		Foam part	/L	1	IN5U/Q1G/4A3
					I4A4
		Backrest			
(3)		Foam part	/L	1	IN6D/Q1G/4A3
					I4A4
		Backrest			
(3)		Foam part	/L	1	IN1P/Q2J/4A3

Model: 95B **Model life 2014>>**

Pos	Part Number	Description	Remark	Qty	Model
					I4A4
(3)		Backrest Foam part	/L	1	IN4M/Q2J/4A3 I4A4
(3)		Backrest Foam part	/L	1	IN5U/Q2J/4A3 I4A4
(3)		Backrest Foam part	/L	1	IN6D/Q2J/4A3 I4A4
(3)		Backrest Foam part	/L	1	IN1M/Q2J/4A3 I4A4
(3)	958 521 780 00	Backrest Foam part	/R	1	IN1P/Q1G/4A3 I4A4
(3)		Backrest Foam part	/R	1	IN4M/Q1G/4A3 I4A4
(3)		Backrest Foam part	/R	1	IN5U/Q1G/4A3 I4A4
(3)		Backrest Foam part	/R	1	IN6D/Q1G/4A3 I4A4
(3)		Backrest Foam part	/R	1	IN1P/Q2J/4A3 I4A4
(3)		Backrest Foam part	/R	1	IN4M/Q2J/4A3 I4A4
(3)		Backrest Foam part	/R	1	IN5U/Q2J/4A3 I4A4
(3)		Backrest Foam part	/R	1	IN6D/Q2J/4A3 I4A4
(3)		Backrest Foam part	/R	1	IN1M/Q2J/4A3 I4A4
(3)	958 521 789 00	Backrest Foam part	/L	1	IN0Q/Q2J/4A3 I4A4
(3)		Backrest Foam part	/L	1	IN1A/Q2J/4A3 I4A4
(3)		Backrest Foam part	/L	1	IN1B/Q2J/4A3 I4A4
(3)	958 521 790 00	Backrest Foam part	/R	1	IN0Q/Q2J/4A3 I4A4
(3)		Backrest Foam part	/R	1	IN1A/Q2J/4A3 I4A4
(3)		Backrest Foam part	/R	1	IN1B/Q2J/4A3 I4A4
(3)	958 521 787 00	Backrest Foam part	/L	1	IN1M/Q1J/4A0
(3)		Backrest Foam part	/L	1	IN1P/Q1J/4A0
		Backrest			

Model: 95B **Model life 2014>>**

Pos	Part Number	Description	Remark	Qty	Model
(3)		Foam part Backrest	/L	1	IN5U/Q1J/4A0
(3)	958 521 788 00	Foam part Backrest	/R	1	IN1M/Q1J/4A0
(3)		Foam part Backrest	/R	1	IN1P/Q1J/4A0
(3)		Foam part Backrest	/R	1	IN5U/Q1J/4A0
(3)	958 521 787 10	Foam part Backrest	/L	1	IN1M/Q1J/4A3 I4A4
(3)		Foam part Backrest	/L	1	IN1P/Q1J/4A3 I4A4
(3)		Foam part Backrest	/L	1	IN5U/Q1J/4A3 I4A4
(3)	958 521 788 10	Foam part Backrest	/R	1	IN1M/Q1J/4A3 I4A4
(3)		Foam part Backrest	/R	1	IN1P/Q1J/4A3 I4A4
(3)		Foam part Backrest	/R	1	IN5U/Q1J/4A3 I4A4
(3)	958 521 791 00	Foam part Backrest	/L	1	IN0Q/Q1J/4A3 I4A4
(3)		Foam part Backrest	/L	1	IN1A/Q1J/4A3 I4A4
(3)		Foam part Backrest	/L -14	1	IN1B/Q1J/4A3 I4A4
(3)	958 521 792 00	Foam part Backrest	/R	1	IN0Q/Q1J/4A3 I4A4
(3)		Foam part Backrest	/R	1	IN1A/Q1J/4A3 I4A4
(3)		Foam part Backrest	/R	1	IN1B/Q1J/4A3 I4A4
4	95B 881 375 D	Foam part Seat cushion	/L	1	IL0L/N1P/Q1G I4A0
(4)		Foam part Seat cushion	/L	1	IL0L/N4M/Q1G I4A0
(4)		Foam part Seat cushion	/L	1	IL0L/N5U/Q1G I4A0
(4)		Foam part Seat cushion	/L	1	IL0L/N6D/Q1G I4A0
(4)	95B 881 376 F	Foam part Seat cushion	/R	1	IL0L/N1P/Q1G I4A0/9P3/9P6
(4)		Foam part Seat cushion	/R	1	IL0L/N4M/Q1G I4A0/9P3/9P6
(4)		Foam part	/R	1	IL0L/N5U/Q1G

Model: 95B **Model life 2014>>**

Pos	Part Number	Description	Remark	Qty	Model
					I4A0/9P3/9P6
		Seat cushion			
(4)		Foam part	/R	1	IL0L/N6D/Q1G
					I4A0/9P3/9P6
		Seat cushion			
(4)	95B 881 375 E	Foam part	/L	1	IL0R/N1P/Q1G
					I4A0
		Seat cushion			
(4)		Foam part	/L	1	IL0R/N4M/Q1G
					I4A0
		Seat cushion			
(4)		Foam part	/L	1	IL0R/N5U/Q1G
					I4A0
		Seat cushion			
(4)		Foam part	/L	1	IL0R/N6D/Q1G
					I4A0
		Seat cushion			
(4)	95B 881 376 D	Foam part	/R	1	IL0R/N1P/Q1G
					I4A0/9P3/9P6
		Seat cushion			
(4)		Foam part	/R	1	IL0R/N4M/Q1G
					I4A0/9P3/9P6
		Seat cushion			
(4)		Foam part	/R	1	IL0R/N5U/Q1G
					I4A0/9P3/9P6
		Seat cushion			
(4)		Foam part	/R	1	IL0R/N6D/Q1G
					I4A0/9P3/9P6
		Seat cushion			
(4)		Foam part	/R	1	IN6D/Q1G/4A0
					I9P7
		Seat cushion			
(4)	95B 881 375 F	Foam part	/L	1	IL0L/N1P/Q1G
					I4A3/4A4
		Seat cushion			
(4)		Foam part	/L	1	IL0L/N4M/Q1G
					I4A3/4A4
		Seat cushion			
(4)		Foam part	/L	1	IL0L/N5U/Q1G
					I4A3/4A4
		Seat cushion			
(4)		Foam part	/L	1	IL0L/N6D/Q1G
					I4A3/4A4
		Seat cushion			
(4)	95B 881 376 G	Foam part	/R	1	IL0L/N1P/Q1G
					I4A3/4A4/9P3
					I9P6
		Seat cushion			
(4)		Foam part	/R	1	IL0L/N4M/Q1G
					I4A3/4A4/9P3
					I9P6
		Seat cushion			
(4)		Foam part	/R	1	IL0L/N5U/Q1G
					I4A3/4A4/9P3
					I9P6
		Seat cushion			
(4)		Foam part	/R	1	IL0L/N6D/Q1G
					I4A3/4A4/9P3
					I9P6
		Seat cushion			
(4)	95B 881 375 G	Foam part	/L	1	IL0R/N1P/Q1G
					I4A3/4A4
		Seat cushion			

Model: 95B **Model life 2014>>**

Pos	Part Number	Description	Remark	Qty	Model
(4)		Foam part Seat cushion	/L	1	IL0R/N4M/Q1G I4A3/4A4
(4)		Foam part Seat cushion	/L	1	IL0R/N5U/Q1G I4A3/4A4
(4)		Foam part Seat cushion	/L	1	IL0R/N6D/Q1G I4A3/4A4
(4)	95B 881 376 E	Foam part Seat cushion	/R	1	IL0R/N1P/Q1G I4A3/4A4/9P3 I9P6
(4)		Foam part Seat cushion	/R	1	IL0R/N4M/Q1G I4A3/4A4/9P3 I9P6
(4)		Foam part Seat cushion	/R	1	IL0R/N5U/Q1G I4A3/4A4/9P3 I9P6
(4)		Foam part Seat cushion	/R	1	IL0R/N6D/Q1G I4A3/4A4/9P3 I9P6
(4)		Foam part Seat cushion	/R	1	IN1M/Q1G/4A3 I4A4/9P7
(4)		Foam part Seat cushion	/R	1	IN1P/Q1G/4A3 I4A4/9P7
(4)		Foam part Seat cushion	/R	1	IN4M/Q1G/4A3 I4A4/9P7
(4)		Foam part Seat cushion	/R	1	IN5U/Q1G/4A3 I4A4/9P7
(4)		Foam part Seat cushion	/R	1	IN6D/Q1G/4A3 I4A4/9P7
(4)	958 521 387 00	Foam part Seat cushion	/L	1	IL0L/N1M/Q1J I4A0
(4)		Foam part Seat cushion	/L	1	IL0L/N1P/Q1J I4A0
(4)		Foam part Seat cushion	/L	1	IL0L/N5U/Q1J I4A0
(4)	958 521 487 00	Foam part Seat cushion	/R	1	IL0L/N1M/Q1J I4A0/9P3/9P6
(4)		Foam part Seat cushion	/R	1	IL0L/N1P/Q1J I4A0/9P3/9P6
(4)		Foam part Seat cushion	/R	1	IL0L/N5U/Q1J I4A0/9P3/9P6
(4)	958 521 389 01	Foam part Seat cushion	/L	1	IL0L/N1M/Q1J I4A3/4A4
(4)		Foam part	/L	1	IL0L/N1P/Q1J I4A3/4A4

Model: 95B **Model life 2014>>**

Pos	Part Number	Description	Remark	Qty	Model
(4)		Seat cushion Foam part	/L	1	IL0L/N5U/Q1J I4A3/4A4
(4)	958 521 489 01	Seat cushion Foam part	/R	1	IL0L/N1M/Q1J I4A3/4A4/9P3 I9P6
(4)		Seat cushion Foam part	/R	1	IL0L/N1P/Q1J I4A3/4A4/9P3 I9P6
(4)		Seat cushion Foam part	/R	1	IL0L/N5U/Q1J I4A3/4A4/9P3 I9P6
(4)	958 521 388 00	Seat cushion Foam part	/L	1	IL0R/N1M/Q1J I4A0
(4)		Seat cushion Foam part	/L	1	IL0R/N1P/Q1J I4A0
(4)		Seat cushion Foam part	/L	1	IL0R/N5U/Q1J I4A0
(4)	958 521 488 00	Seat cushion Foam part	/R	1	IL0L/N1M/Q1J I4A0/9P7
(4)		Seat cushion Foam part	/R	1	IL0L/N1P/Q1J I4A0/9P7
(4)		Seat cushion Foam part	/R	1	IL0L/N5U/Q1J I4A0/9P7
(4)		Seat cushion Foam part	/R	1	IL0R/N1M/Q1J I4A0/9P3/9P6
(4)		Seat cushion Foam part	/R	1	IL0R/N1P/Q1J I4A0/9P3/9P6
(4)		Seat cushion Foam part	/R	1	IL0R/N5U/Q1J I4A0/9P3/9P6
(4)	958 521 391 01	Seat cushion Foam part	/L	1	IL0R/N1M/Q1J I4A3/4A4
(4)		Seat cushion Foam part	/L	1	IL0R/N1P/Q1J I4A3/4A4
(4)		Seat cushion Foam part	/L	1	IL0R/N5U/Q1J I4A3/4A4
(4)	958 521 491 01	Seat cushion Foam part	/R	1	IN1M/Q1J/4A3 I4A4/9P7
(4)		Seat cushion Foam part	/R	1	IN1P/Q1J/4A3 I4A4/9P7
(4)		Seat cushion Foam part	/R	1	IN5U/Q1J/4A3 I4A4/9P7
(4)		Seat cushion Foam part	/R	1	IL0R/N1M/Q1J I4A3/4A4/9P3

Model: 95B **Model life 2014>>**

Pos	Part Number	Description	Remark	Qty	Model
					I9P6
(4)		Seat cushion Foam part	/R	1	IL0R/N1P/Q1J I4A3/4A4/9P3 I9P6
(4)		Seat cushion Foam part	/R	1	IL0R/N5U/Q1J I4A3/4A4/9P3 I9P6
(4)	958 521 395 01	Seat cushion Foam part	/L	1	IL0L/N0Q/Q1J I4A3/4A4
(4)		Seat cushion Foam part	/L	1	IL0L/N1A/Q1J I4A3/4A4
(4)		Seat cushion Foam part	/L	1	IL0L/N1B/Q1J I4A3/4A4
(4)	958 521 495 01	Seat cushion Foam part	/R	1	IL0L/N0Q/Q1J I4A3/4A4/9P3 I9P6
(4)		Seat cushion Foam part	/R	1	IL0L/N1A/Q1J I4A3/4A4/9P3 I9P6
(4)		Seat cushion Foam part	/R	1	IL0L/N1B/Q1J I4A3/4A4/9P3 I9P6
(4)	958 521 379 00	Seat cushion Foam part	/L	1	IL0L/N1M/Q2J I4A0
(4)		Seat cushion Foam part	/L	1	IL0L/N1P/Q2J I4A0
(4)		Seat cushion Foam part	/L	1	IL0L/N5U/Q2J I4A0
(4)	958 521 480 00	Seat cushion Foam part	/R	1	IL0L/N1M/Q2J I4A0/9P7
(4)		Seat cushion Foam part	/R	1	IL0L/N1P/Q2J I4A0/9P7
(4)		Seat cushion Foam part	/R	1	IL0L/N5U/Q2J I4A0/9P7
(4)		Seat cushion Foam part	/R	1	IL0R/N1M/Q2J I4A0/9P3/9P6
(4)		Seat cushion Foam part	/R	1	IL0R/N1P/Q2J I4A0/9P3/9P6
(4)		Seat cushion Foam part	/R	1	IL0R/N5U/Q2J I4A0/9P3/9P6
(4)	958 521 380 00	Seat cushion Foam part	/L	1	IL0R/N1M/Q2J I4A0
(4)		Seat cushion Foam part	/L	1	IL0R/N1P/Q2J I4A0

Model: 95B **Model life 2014>>**

Pos	Part Number	Description	Remark	Qty	Model
(4)		Seat cushion Foam part	/L	1	IL0R/N5U/Q2J I4A0
(4)	958 521 479 00	Seat cushion Foam part	/R	1	IL0L/N1M/Q2J I4A0/9P3/9P6
(4)		Seat cushion Foam part	/R	1	IL0L/N1P/Q2J I4A0/9P3/9P6
(4)		Seat cushion Foam part	/R	1	IL0L/N5U/Q2J I4A0/9P3/9P6
(4)	958 521 381 01	Seat cushion Foam part	/L	1	IL0L/N1M/Q2J I4A3/4A4
(4)		Seat cushion Foam part	/L	1	IL0L/N1P/Q2J I4A3/4A4
(4)		Seat cushion Foam part	/L	1	IL0L/N5U/Q2J I4A3/4A4
(4)	958 521 482 01	Seat cushion Foam part	/R	1	IL0R/N1M/Q2J I4A3/4A4/9P3 I9P6
(4)		Seat cushion Foam part	/R	1	IL0R/N1P/Q2J I4A3/4A4/9P3 I9P6
(4)		Seat cushion Foam part	/R	1	IL0R/N5U/Q2J I4A3/4A4/9P3 I9P6
(4)		Seat cushion Foam part	/R	1	IN1M/Q2J/4A3 I4A4/9P7
(4)		Seat cushion Foam part	/R	1	IN1P/Q2J/4A3 I4A4/9P7
(4)		Seat cushion Foam part	/R	1	IN5U/Q2J/4A3 I4A4/9P7
(4)	958 521 382 01	Seat cushion Foam part	/L	1	IL0R/N1M/Q2J I4A3/4A4
(4)		Seat cushion Foam part	/L	1	IL0R/N1P/Q2J I4A3/4A4
(4)		Seat cushion Foam part	/L	1	IL0R/N5U/Q2J I4A3/4A4
(4)	958 521 481 01	Seat cushion Foam part	/R	1	IL0L/N1M/Q2J I4A3/4A4/9P3 I9P6
(4)		Seat cushion Foam part	/R	1	IL0L/N1P/Q2J I4A3/4A4/9P3 I9P6
(4)		Seat cushion Foam part	/R	1	IL0L/N5U/Q2J I4A3/4A4/9P3 I9P6

Model: 95B **Model life 2014>>**

Pos	Part Number	Description	Remark	Qty	Model
(4)	958 521 393 01	Seat cushion Foam part	/L	1	IL0L/N0Q/N1A IN1B/Q2J/4A3 I4A4
(4)	958 521 497 00	Seat cushion with heating Foam part Seat cushion with heating	/R	1	IN0Q/N1A/N1B IQ2J/4A3/4A4

Illustration: 817-12

PORSCHE

Model: 95B **Model life 2014>>**

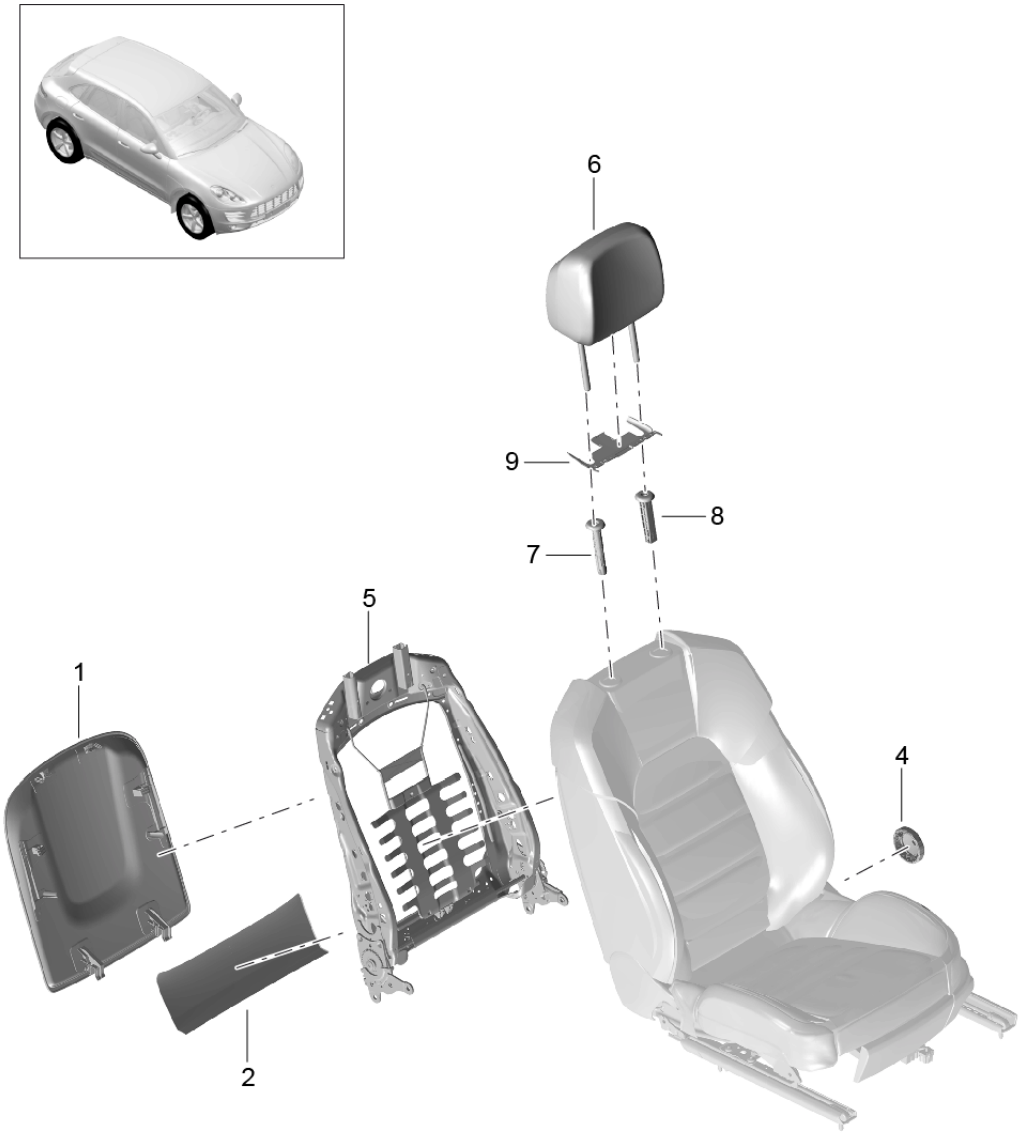

Model: 95B **Model life 2014>>**

Pos	Part Number	Description	Remark	Qty	Model
		Backrest frame			
		Backrest shell			
		Accessories			
1	958 521 989 00	Backrest shell		1	IN0Q/N1A/N1B
					IN1M/N1P/N5U
					IN6D/QE1
	958 521 989 00 1D0	Black			+VC,+VF,+VI,
					+VU,+VK,+VO
	958 521 989 00 OW7	Agate Grey			+VD,+VG,+VL
	958 521 989 00 2E0	Luxor Beige			+VE,+VX,+VH,
					+VZ,+VM,+VP
	958 521 989 00 OE4	Saddle Tan			+VN
	958 521 989 00 OL1	Pebble Grey			+VQ
	958 521 989 00 5H0	Espresso			+VR
(1)	7P5 881 989 J	Backrest shell		1	IN0Q/N1A/N1B
					IN1M/N1P/N5U
					IN6D/QE0
	7P5 881 989 J 1D0	Black			+VC,+VF,+VI,
					+VU,+VK,+VO
	7P5 881 989 J OW7	Agate Grey			+VD,+VG,+VL
	7P5 881 989 J 2E0	Luxor Beige			+VE,+VX,+VH,
					+VZ,+VM,+VP
	7P5 881 989 J OE4	Saddle Tan			+VN
	7P5 881 989 J OL1	Pebble Grey			+VQ
	7P5 881 989 J 5H0	Espresso			+VR
2	7P5 881 607	Cover		1	IQE1
		Backrest shell			
	7P5 881 607 1D0	Black			+VC,+VF,+VI,
					+VU,+VK,+VO
	7P5 881 607 OW7	Agate Grey			+VD,+VG,+VL
	7P5 881 607 2E0	Luxor Beige			+VE,+VX,+VH,
					+VZ,+VM,+VP
	7P5 881 607 OE4	Saddle Tan			+VN
	7P5 881 607 OL1	Pebble Grey			+VQ
	7P5 881 607 5H0	Espresso			+VR
(2)	7P5 881 607 B	Cover		1	IN0Q/N1A/N1B
					IN1M/N1P/N4M
					IN5U/N6D/QE0
		Backrest shell			
	7P5 881 607 B 1D0	Black			+VC,+VF,+VI,
					+VU,+VK,+VO
	7P5 881 607 B OW7	Agate Grey			+VD,+VG,+VL,
	7P5 881 607 B 2E0	Luxor Beige			+VE,+VX,+VH,
					+VZ,+VM,+VP
	7P5 881 607 B OE4	Saddle Tan			+VN
	7P5 881 607 B OL1	Pebble Grey			+VQ
	7P5 881 607 B 5H0	Espresso			+VR
4	8T0 881 671	Adjusting wheel		1	I3PE
		Backrest frame			
	8T0 881 671 82V	Titanium Black			+VC,+VJ,+VF,
					+VI,+VU,+VK,
					+VO
	8T0 881 671 OP1	Agate Grey			+VD,+VG,+VL
	8T0 881 671 4H0	Luxor Beige			+VE,+VH,+VM,
					+VP,+VX,+VZ
	8T0 881 671 OM8	Saddle Tan			+VN
	8T0 881 671 OV4	Pebble Grey			+VQ
	8T0 881 671 7N0	Espresso			+VR
5	95B 881 045	Backrest frame	/L	1	I3PE/3PJ
		Left			
		Use also:			
		958.881.879			
		9A7.898.173			

Model: 95B **Model life 2014>>**

Pos	Part Number	Description	Remark	Qty	Model
(5)	9A7 881 045 00	Backrest frame Memory Left Use also: 958.881.879.A 9A7.898.173	/L	1	I3PN
5	95B 881 046	Backrest frame Right Use also: 958.881.879 9A7.898.173	/R	1	I3PE/3PJ
(5)	9A7 881 046 00	Backrest frame Memory Right Use also: 958.881.879.A 9A7.898.173	/R	1	I3PN
(6)	95B 881 901 A	Head rest Leather		1	IN0Q/N1B/N1M IN5U/3J4
	95B 881 901 A D0D	Black			+VC,+VF,+VK
	95B 881 901 A D0F	Luxor Beige			+VE,+VH,+VM, +VP
	95B 881 901 A YKI	Agate Grey			+VD,+VG,+VL
	95B 881 901 A AAB	Black/Carrera Red			+VI,+VU,+VO
	95B 881 901 A YMI	Saddle Tan			+VJ,+VN
	95B 881 901 A YPI	Pebble Grey			+VQ
(6)	95B 881 901 B	Head rest with Crest		1	IN0Q/N1B/N1M IN5U/3J7/5ZF
	95B 881 901 B D0D	Black			+VC,+VF,+VK
	95B 881 901 B D0F	Luxor Beige			+VE,+VH,+VM, +VP
	95B 881 901 B YKI	Agate Grey			+VD,+VG,+VL
	95B 881 901 B AAB	Black/Carrera Red			+VI,+VU,+VO
	95B 881 901 B YMI	Saddle Tan			+VJ,+VN
	95B 881 901 B YPI	Pebble Grey			+VQ
(6)	95B 881 901 C	Head rest Natural leather		1	IN1A/N1P/3J4
	95B 881 901 C D0L	Espresso			+VR
(6)	95B 881 901 D	Head rest Natural leather with Crest		1	IN1A/N1P/3J7 I5ZF
	95B 881 901 D D0L	Espresso			+VR
(6)	95B 881 901 E	Head rest Leatherette		1	IN4M/3J4
	95B 881 901 E YDI	Black			+VF
	95B 881 901 E YEI	Agate Grey			+VG
	95B 881 901 E YFI	Luxor Beige			+VH
	95B 881 901 E YHI	Black/Carrera Red			+VI
	95B 881 901 E YGI	Black/Saddle Tan			+VJ
(6)	95B 881 901 F	Head rest Plain leather with Crest		1	IN4M/3J7/5ZF
	95B 881 901 F YDI	Black			+VF
	95B 881 901 F YEI	Agate Grey			+VG
	95B 881 901 F YFI	Luxor Beige			+VH
	95B 881 901 F YHI	Black/Carrera Red			+VI
	95B 881 901 F YGI	Black/Saddle Tan			+VJ

Model: 95B **Model life 2014>>**

Pos	Part Number	Description	Remark	Qty	Model
(6)	95B 881 901 AC	Head rest	17-	1	IN0Q/N1B/N1M IN2S/N5U/5ZD
		Plain leather Turbo Logo			
	95B 881 901 AC HHW	Black/Rhodium Silver			+TS
	95B 881 901 AC HAZ	Black/Carrera Red			+TR
7	1K0 881 920 R	Guide sleeve		1	IN0Q/N1A/N1B IN1M/N1P/N4M IN5U/N6D
		Right			
	1K0 881 920 R 82V	Titanium Black			+VC,+VJ,+VF, +VI,+VU,+VK, +VO
	1K0 881 920 R OP1	Agate Grey			+VD,+VG,+VL
	1K0 881 920 R 4H0	Luxor Beige			+VE,+VH,+VM, +VP,+VX,+VZ
	1K0 881 920 R OM8	Saddle Tan			+VN
	1K0 881 920 R OV4	Pebble Grey			+VQ
	1K0 881 920 R 7N0	Espresso			+VR
8	1K0 881 920 Q	Guide sleeve		1	IN0Q/N1A/N1B IN1M/N1P/N4M IN5U/N6D
		Right			
	1K0 881 920 Q 82V	Titanium Black			+VC,+VJ,+VF, +VI,+VU,+VK, +VO
	1K0 881 920 Q OP1	Agate Grey			+VD,+VG,+VL
	1K0 881 920 Q 4H0	Luxor Beige			+VE,+VH,+VM, +VP,+VX,+VZ
	1K0 881 920 Q OM8	Saddle Tan			+VN
	1K0 881 920 Q OV4	Pebble Grey			+VQ
	1K0 881 920 Q 7N0	Espresso			+VR
9	1K0 882 519 A	Cover		1	IN0Q/N1A/N1B IN1M/N1P/N5U IN6D/3J4/3J7 I5ZF
		Cover Head rest			IN4M
	1K0 882 519 A 82V	Titanium Black			+VC,+VJ,+VF, +VI,+VU,+VK, +VO
	1K0 882 519 A OP1	Agate Grey			+VD,+VG,+VL
	1K0 882 519 A 4H0	Luxor Beige			+VE,+VH,+VM, +VP,+VX,+VZ
	1K0 882 519 A OM8	Saddle Tan			+VN
	1K0 882 519 A OV4	Pebble Grey			+VQ
	1K0 882 519 A 7N0	Espresso			+VR

Illustration: 817-15

Model: 95B **Model life 2014>>**

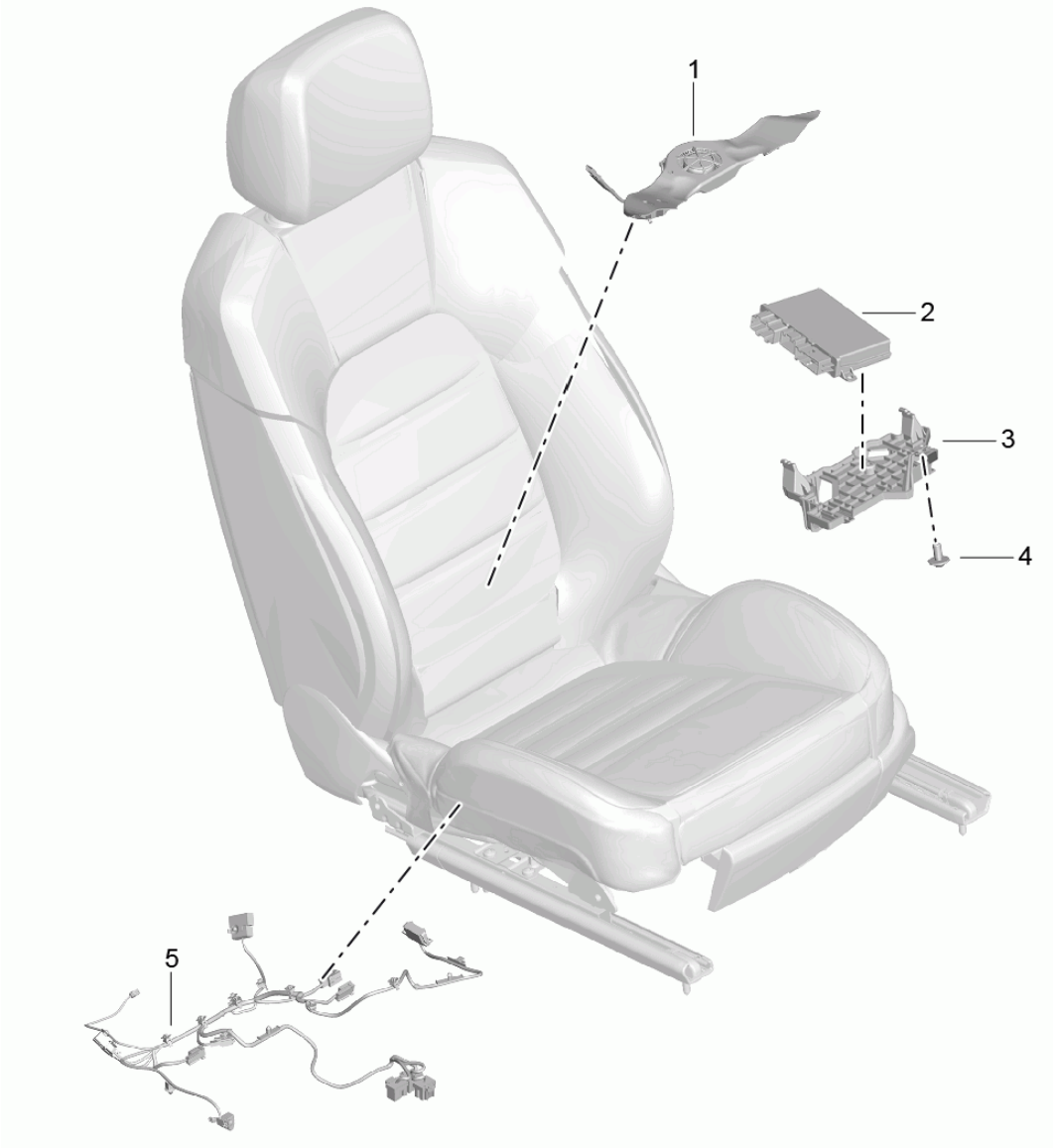

Model: 95B **Model life 2014>>**

Pos	Part Number	Description	Remark	Qty	Model
		electrical components			
		Wiring harnesses			
		Control units			
		Accessories			
1	958 624 345 00	Electric fan		1	I4D3
		Seat surface			
		Vented			
(1)	958 624 351 00	Electric fan		1	I4D3
		Backrest surface			
		Vented			
2	958 618 760 04	Control unit	15-	1	I3L4/3L6/3PH I3PJ/3PN
		Memory			
		Seating position control			
3	958 521 729 00	Support		1	I3PN
		Control unit			
		Memory	15-		I3PH/3PN
		Seating position control			
4	N 907 371 01	Outer hexagon round screw		1	
		Support			
		Control unit			
		Memory			
		Seating position control			
		Comfort seat			
		Sports seat			
5	95B 971 363 BA	Wiring harness		1	IQ1G/3PB/4A0 I4D0/4UE/9P3
		Seat adjuster			
(5)	95B 971 363 BB	Wiring harness		1	IQ1G/3PB/4A3 I4A4/4D0/4UE I9P3
		Seat adjuster			
(5)	95B 971 363 BC	Wiring harness		1	IQ1G/3PB/4A0 I4D0/4UQ/9P7
		Seat adjuster			
(5)	95B 971 363 BD	Wiring harness		1	IQ1G/3PB/4A3 I4A4/4D0/4UQ I9P7
		Seat adjuster			
(5)	95B 971 364 BA	Wiring harness		1	IQ1G/3PE/4A0 I4D0/4UE/9P3
		Seat adjuster			
(5)	95B 971 364 BB	Wiring harness		1	IQ1G/3PE/4A3 I4A4/4D0/4UE I9P3
		Seat adjuster			
(5)	95B 971 363 R	Wiring harness	/L	1	IL0L/Q2J/3PN I4A3/4A4/4D3 I4UE/9P3
		Seat adjuster			
(5)	95B 971 364 R	Wiring harness	/R	1	IL0L/Q2J/3PN I4A3/4A4/4D3 I4UQ/9P7
		Seat adjuster			
(5)	95B 971 363 CP	Wiring harness	/L	1	IL0L/Q1J/3PN I4A3/4A4/4D3 I4UD/4UE/9MA I9P3 I9P6
		Seat adjuster			
(5)	95B 971 364 CP	Wiring harness	/R	1	IL0L/Q2J/3PN I4A3/4A4/4D3 I4UQ/9MA/9P7
		Seat adjuster			

Illustration: 817-18

PORSCHE

Model: 95B **Model life 2014>>**

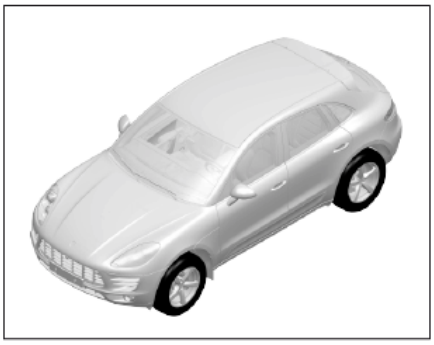

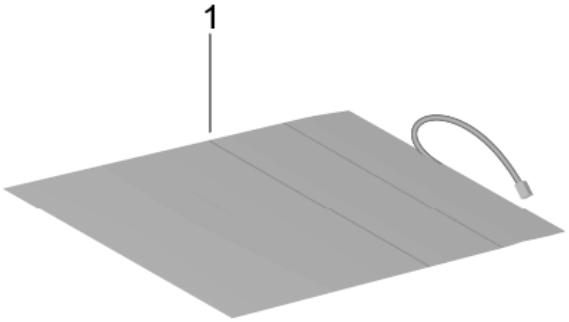

Model: 95B **Model life 2014>>**

Pos	Part Number	Description	Remark	Qty	Model
1	958 618 553 10	Seat occupancy detection Passenger's side And Driver's side Module Seat occupancy detection		1	

Illustration: 817-35

PORSCHE

Model: 95B **Model life 2014>>**

Model: 95B **Model life 2014>>**

Pos	Part Number	Description	Remark	Qty	Model
		Seat and backrest surface			
		Accessories			
		Cover			
1	95B 885 657	Cover		1	
		Seat belt			
		Backrest			
	95B 885 657 82V	Titanium Black			+VC,+VJ,+VF, +VI,+VU,+VK, +VO
	95B 885 657 OP1	Agate Grey			+VD,+VG,+VL
	95B 885 657 4H0	Luxor Beige			+VE,+VH,+VM, +VP,+VX,+VZ
	95B 885 657 OM8	Saddle Tan			+VN
	95B 885 657 OV4	Pebble Grey			+VQ
	95B 885 657 7N0	Espresso			+VR
2	95B 885 249	Cover	/L	1	
		Backrest locking lever			
		Lateral			
	95B 885 249 82V	Titanium Black			+VC,+VJ,+VF, +VI,+VU,+VK, +VO
	95B 885 249 OP1	Agate Grey			+VD,+VG,+VL +VQ
	95B 885 249 4H0	Luxor Beige			+VE,+VH,+VM
	95B 885 249 OM8	Saddle Tan			+VN,+VP
	95B 885 249 7N0	Espresso			+VR
(2)	95B 885 250	Cover	/R	1	
		Backrest locking lever			
		Lateral			
	95B 885 250 82V	Titanium Black			+VC,+VJ,+VF, +VI,+VU,+VK, +VO
	95B 885 250 OP1	Agate Grey			+VD,+VG,+VL, +VQ
	95B 885 250 4H0	Luxor Beige			+VE,+VH,+VM
	95B 885 250 OM8	Saddle Tan			+VN,+VP
	95B 885 250 7N0	Espresso			+VR
3	95B 885 879	Cap	/L	1	
		Backrest locking lever			
		Upper			
	95B 885 879 82V	Titanium Black			+VC,+VJ,+VF, +VI,+VU,+VK, +VO
	95B 885 879 OP1	Agate Grey			+VD,+VG,+VL
	95B 885 879 4H0	Luxor Beige			+VE,+VH,+VM, +VP,+VX,+VZ
	95B 885 879 OM8	Saddle Tan			+VN
	95B 885 879 OV4	Pebble Grey			+VQ
	95B 885 879 7N0	Espresso			+VR
(3)	95B 885 880	Cap	/R	1	
		Backrest locking lever			
		Upper			
	95B 885 880 82V	Titanium Black			+VC,+VJ,+VF, +VI,+VU,+VK, +VO
	95B 885 880 OP1	Agate Grey			+VD,+VG,+VL
	95B 885 880 4H0	Luxor Beige			+VE,+VH,+VM, +VP,+VX,+VZ
	95B 885 880 OM8	Saddle Tan			+VN
	95B 885 880 OV4	Pebble Grey			+VQ
	95B 885 880 7N0	Espresso			+VR
4	95B 885 217	Frame		1	
		Release			

Model: 95B **Model life 2014>>**

Pos	Part Number	Description	Remark	Qty	Model
		Ski bag			
	95B 885 217 82V	Titanium Black			+VC,+VJ,+VF, +VI,+VU,+VK, +VO
	95B 885 217 OP1	Agate Grey			+VD,+VG,+VL, +VQ
	95B 885 217 4H0	Luxor Beige			+VE,+VH,+VM
	95B 885 217 OM8	Saddle Tan			+VN,+VP
	95B 885 217 7N0	Espresso			+VR
5	95B 885 949	Trim cover Collapsible Backrest	/L	1	
	95B 885 949 82V	Titanium Black			+VC,+VJ,+VF, +VI,+VU,+VK, +VO
	95B 885 949 OP1	Agate Grey			+VD,+VG,+VL
	95B 885 949 4H0	Luxor Beige			+VE,+VH,+VM, +VP,+VX,+VZ
	95B 885 949 OM8	Saddle Tan			+VN
	95B 885 949 OV4	Pebble Grey			+VQ
	95B 885 949 7N0	Espresso			+VR
(5)	95B 885 950	Trim cover Collapsible Backrest	/R	1	
	95B 885 950 82V	Titanium Black			+VC,+VJ,+VF, +VI,+VU,+VK, +VO
	95B 885 950 OP1	Agate Grey			+VD,+VG,+VL
	95B 885 950 4H0	Luxor Beige			+VE,+VH,+VM, +VP,+VX,+VZ
	95B 885 950 OM8	Saddle Tan			+VN
	95B 885 950 OV4	Pebble Grey			+VQ
	95B 885 950 7N0	Espresso			+VR

Illustration: 817-40

PORSCHE

Model: 95B **Model life 2014>>**

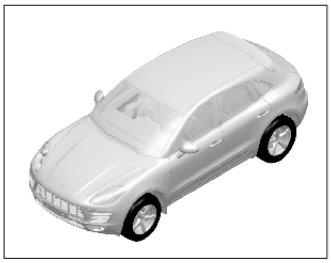

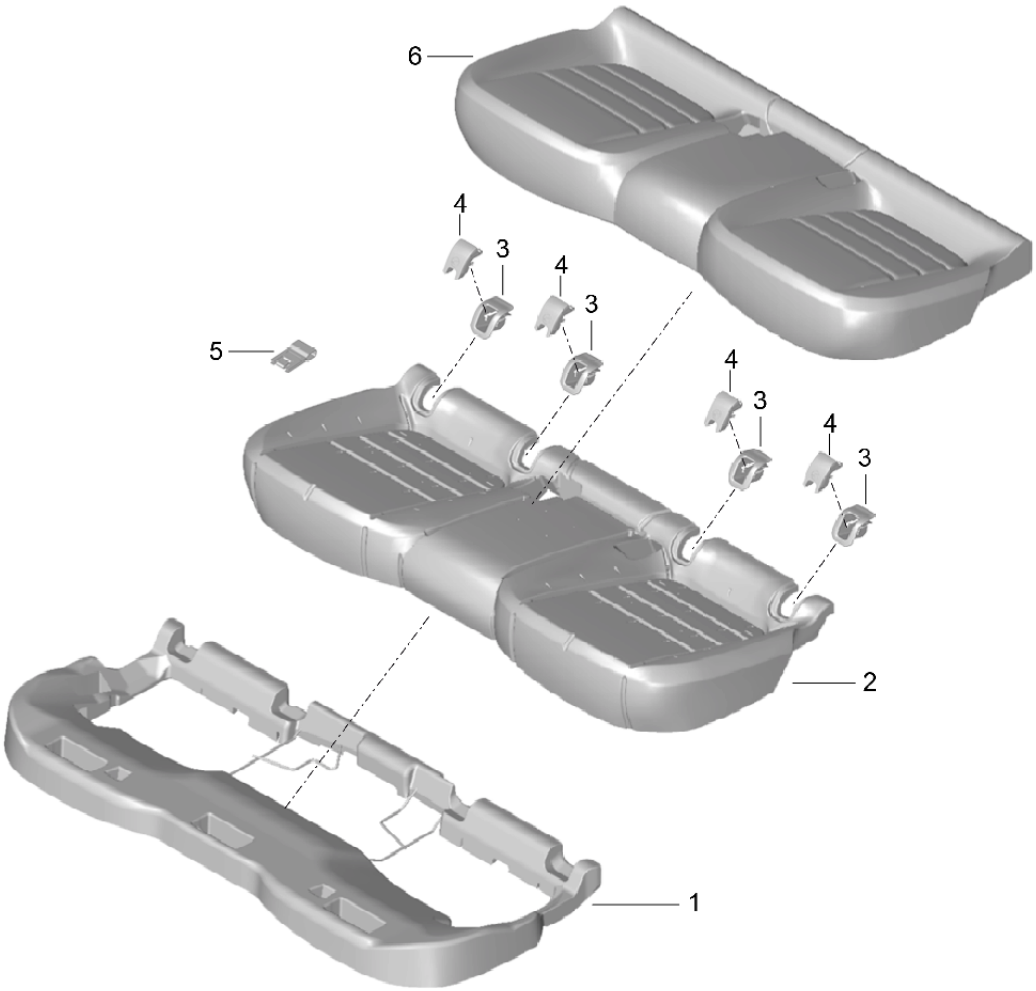

Model: 95B **Model life 2014>>**

Pos	Part Number	Description	Remark	Qty	Model
		Foam part			
		Cover			
		Seat cushion			
1	95B 885 259 A	Bracket		1	
		Foam part			
		Seat cushion			
2	95B 885 375	Foam part	-14	1	I5KA
		Seat cushion			
2	95B 885 375 B	Foam part	15-	1	I5KA
		Seat cushion			
3	8U0 887 233 B	Guide		1	
		Child car seat			
		Seat cushion			
		ISOFIX			
	8U0 887 233 B 1E0	Black			+VC,+VJ,+VF,
					+VI,+VU,+VK,
					+VO
	8U0 887 233 B OP1	Agate Grey			+VD,+VG,+VL
	8U0 887 233 B 4H0	Luxor Beige			+VE,+VH,+VM,
					+VP,+VX,+VZ
	8U0 887 233 B OM8	Saddle Tan			+VN
	8U0 887 233 B OV4	Pebble Grey			+VQ
	8U0 887 233 B 7N0	Espresso			+VR
4	8U0 887 187	Cover		1	
		Guide			
		Child car seat			
		Seat cushion			
		ISOFIX			
	8U0 887 187 1E0	Black			+VC,+VJ,+VF,
					+VI,+VU,+VK,
					+VO
	8U0 887 187 OP1	Agate Grey			+VD,+VG,+VL
	8U0 887 187 4H0	Luxor Beige			+VE,+VH,+VM,
					+VP,+VX,+VZ
	8U0 887 187 OM8	Saddle Tan			+VN
	8U0 887 187 OV4	Pebble Grey			+VQ
	8U0 887 187 7N0	Espresso			+VR
6	95B 885 405 M	Cover		1	IN6D/4A0/4A3
					I5KA
		Seat cushion			
	95B 885 405 M YAI	Black			+VC
	95B 885 405 M YBI	Agate Grey			+VD
	95B 885 405 M YCI	Luxor Beige			+VE,+VX
(6)	95B 885 405 N	Cover		1	IN6D/4A4/5KA
		Seat cushion			
	95B 885 405 N YAI	Black			+VC
	95B 885 405 N YBI	Agate Grey			+VD
	95B 885 405 N YCI	Luxor Beige			+VE,+VX
(6)	95B 885 405 P	Cover		1	IN0Q/N5U/4A0
					I4A3/5KA
		Seat cushion			
	95B 885 405 P D0D	Black			+VK,+VC,+VF
	95B 885 405 P YKI	Agate Grey			+VL,+VD,+VG
	95B 885 405 P D0F	Luxor Beige			+VE,+VM,+VP
					+VX,+VH,+VZ
	95B 885 405 P YMI	Saddle Tan	15-		+VN
	95B 885 405 P YPI	Pebble Grey	15-		+VQ
(6)	95B 885 405 Q	Cover		1	IN0Q/N5U/4A4
					I5KA
		Seat cushion			
	95B 885 405 Q D0D	Black			+VK,+VC,+VF
	95B 885 405 Q YKI	Agate Grey			+VL+VL,+VD
	95B 885 405 Q D0F	Luxor Beige			+VE,+VM,+VP

Model: 95B **Model life 2014>>**

Pos	Part Number	Description	Remark	Qty	Model
					+VX,+VH,+VZ
	95B 885 405 Q YMI	Saddle Tan	15-		+VN
	95B 885 405 Q YPI	Pebble Grey	15-		+VQ
(6)	95B 885 405 T	Cover		1	IN0Q/N5U/4A0
					I4A3/5KH
		Seat cushion			
	95B 885 405 T D0D	Black			+VK,+VC,+VF
	95B 885 405 T YKI	Agate Grey			+VL+VL,+VD
	95B 885 405 T D0F	Luxor Beige			+VE,+VM,+VP
					+VX,+VH,+VZ
	95B 885 405 T YMI	Saddle Tan			+VN
	95B 885 405 T YPI	Pebble Grey			+VQ
(6)	95B 885 405 AA	Cover		1	IN0Q/N5U/4A4
					I5KH
		Seat cushion			
	95B 885 405 AA D0D	Black			+VK,+VC,+VF
	95B 885 405 AA YKI	Agate Grey			+VL+VL,+VD
	95B 885 405 AA D0F	Luxor Beige			+VE,+VM,+VP
					+VX,+VH,+VZ
	95B 885 405 AA YMI	Saddle Tan			+VN
	95B 885 405 AA YPI	Pebble Grey			+VQ
(6)	95B 885 405 AB	Cover		1	IN1A/N1P/4A0
					I4A3/5KH
		Seat cushion			
	95B 885 405 AB D0L	Espresso			+VR
(6)	95B 885 405 AC	Cover		1	IN1A/N1P/4A4
					I5KH
		Seat cushion			
	95B 885 405 AC D0L	Espresso			+VR
(6)	95B 885 405 AD	Cover		1	IN4M/4A0/4A3
					I5KA
		Seat cushion			
	95B 885 405 AD YDI	Black			+VF
	95B 885 405 AD YEI	Agate Grey			+VG
	95B 885 405 AD YFI	Luxor Beige			+VH,+VZ
	95B 885 405 AD YHI	Black/Carrera Red			+VI
	95B 885 405 AD YGI	Black/Saddle Tan			+VJ
(6)	95B 885 405 AE	Cover		1	IN4M/4A4/5KA
		Seat cushion			
	95B 885 405 AE YDI	Black			+VF
	95B 885 405 AE YEI	Agate Grey			+VG
	95B 885 405 AE YFI	Luxor Beige			+VH,+VZ
	95B 885 405 AE YHI	Black/Carrera Red			+VI
	95B 885 405 AE YGI	Black/Saddle Tan			+VJ
(6)	95B 885 405 AK	Cover	17-	1	IN2S/4A0/4A3
					I5KH
		Seat cushion			
	95B 885 405 AK IVA	Black			+FA,+FF
	95B 885 405 AK DJM	Agate Grey			+FB,+FM
	95B 885 405 AK IVC	Luxor Beige			+FC,+FH
	95B 885 405 AK IVE	Black/Carmine Red			+FL
	95B 885 405 AK DJP	Black/Rhodium Silver			+FE,+TS
	95B 885 405 AK DJN	Saddle Tan			+FI
	95B 885 405 AK HYO	Black/Carrera Red			+TR
(6)	95B 885 405 AL	Cover	17-	1	IN2S/4A4/5KH
		Seat cushion			
		Seat heater			
	95B 885 405 AL IVA	Black			+FA,+FF
	95B 885 405 AL DJM	Agate Grey			+FB,+FM
	95B 885 405 AL IVC	Luxor Beige			+FC,+FH
	95B 885 405 AL IVE	Black/Carmine Red			+FL
	95B 885 405 AL DJP	Black/Rhodium Silver			+FE,+TS
	95B 885 405 AL DJN	Saddle Tan			+FI

Model: 95B **Model life 2014>>**

Pos	Part Number	Description	Remark	Qty	Model
	95B 885 405 AL HYO	Black/Carrera Red			+TR
(6)	95B 885 405 AF	Cover		1	IN1B/N1M/4A0
					I4A3/5KA
		Seat cushion			
	95B 885 405 AF YNI	Carrera Red			+VU,+VO
(6)	95B 885 405 AG	Cover		1	IN1B/N1M/4A4
					I5KA
		Seat cushion			
	95B 885 405 AG YNI	Carrera Red			+VU,+VO
(6)	95B 885 405 AH	Cover		1	IN1B/N1M/4A0
					I4A3/5KH
		Seat cushion			
	95B 885 405 AH YNI	Carrera Red			+VU,+VO
(6)	95B 885 405 AJ	Cover		1	IN1B/N1M/4A4
					I5KH
		Seat cushion			
	95B 885 405 AJ YNI	Carrera Red			+VU,+VO
(6)	95B 885 405 R	Cover		1	IN1A/N1P/4A0
					I4A3/5KA
		Seat cushion			
	95B 885 405 R D0L	Espresso			+VR
(6)	95B 885 405 S	Cover		1	IN1A/N1P/4A4
					I5KA
		Seat cushion			
	95B 885 405 S D0L	Espresso			+VR

Illustration: 817-45

PORSCHE

Model: 95B **Model life 2014>>**

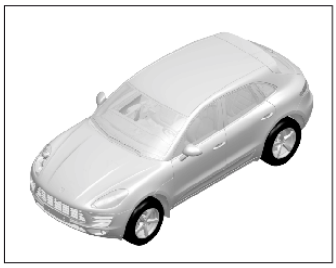

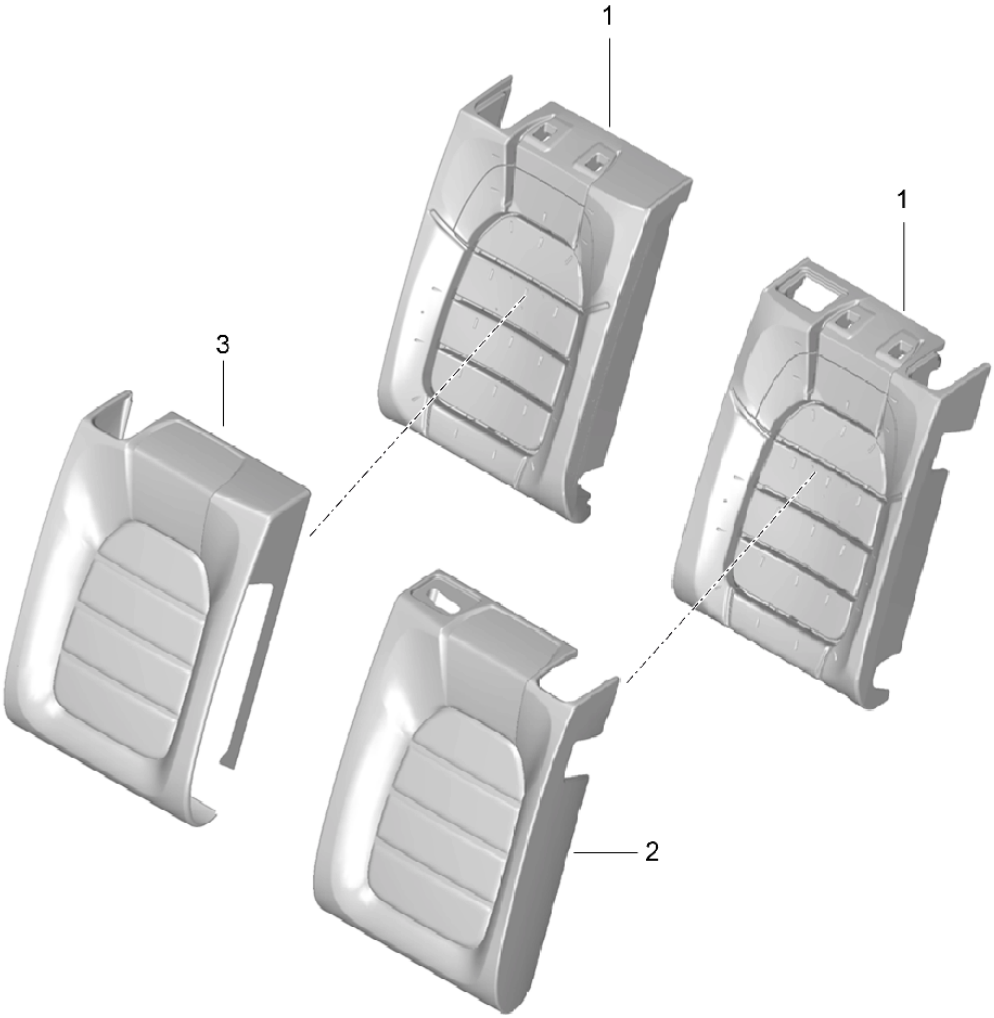

Model: 95B **Model life 2014>>**

Pos	Part Number	Description	Remark	Qty	Model
		Foam part Back seat backrest Cover			
1	95B 885 775	Foam part Back seat backrest	/L	1	I5KA
(1)	95B 885 775 A	Foam part Back seat backrest	/L	1	I5KH
(1)	95B 885 776	Foam part Back seat backrest	/R	1	I5KA
(1)	95B 885 776 A	Foam part Back seat backrest	/R	1	I5KH
2	95B 885 805	Cover Back seat backrest	/L	1	IN6D/4A0/4A3 I5KA
	95B 885 805 YAI	Black			+VC
	95B 885 805 YBI	Agate Grey			+VD
	95B 885 805 YCI	Luxor Beige			+VE,+VX
(2)	95B 885 805 A	Cover Back seat backrest	/L	1	IN6D/4A4/5KA
	95B 885 805 A YAI	Black			+VC
	95B 885 805 A YBI	Agate Grey			+VD
	95B 885 805 A YCI	Luxor Beige			+VE,+VX
(2)	95B 885 805 B	Cover Back seat backrest	/L	1	IN0Q/N5U/4A0 I4A3/5KA
	95B 885 805 B D0D	Black			+VC,+VE,+VF, +VK
	95B 885 805 B YKI	Agate Grey			+VD,+VG,+VL
	95B 885 805 B D0F	Luxor Beige			+VH,+VM,+VP, +VX,+VZ
	95B 885 805 B YMI	Saddle Tan			+VJ,+VN
	95B 885 805 B YPI	Pebble Grey			+VQ
(2)	95B 885 805 C	Cover Back seat backrest	/L	1	IN0Q/N5U/4A4 I5KA
	95B 885 805 C D0D	Black			+VC,+VE,+VF, +VK
	95B 885 805 C YKI	Agate Grey			+VD,+VG,+VL
	95B 885 805 C D0F	Luxor Beige			+VH,+VM,+VP, +VX,+VZ
	95B 885 805 C YMI	Saddle Tan			+VJ,+VN
	95B 885 805 C YPI	Pebble Grey			+VQ
(2)	95B 885 805 F	Cover Back seat backrest	/L	1	IN0Q/N5U/4A0 I4A3/5KH
	95B 885 805 F D0D	Black			+VC,+VE,+VF, +VK
	95B 885 805 F YKI	Agate Grey			+VD,+VG,+VL
	95B 885 805 F D0F	Luxor Beige			+VH,+VM,+VP, +VX,+VZ
	95B 885 805 F YMI	Saddle Tan			+VJ,+VN
	95B 885 805 F YPI	Pebble Grey			+VQ
(2)	95B 885 805 G	Cover Back seat backrest	/L	1	IN0Q/N5U/4A4 I5KH
	95B 885 805 G D0D	Black			+VC,+VE,+VF, +VK
	95B 885 805 G YKI	Agate Grey			+VD,+VG,+VL
	95B 885 805 G D0F	Luxor Beige			+VH,+VM,+VP, +VX,+VZ
	95B 885 805 G YMI	Saddle Tan			+VJ,+VN
	95B 885 805 G YPI	Pebble Grey			+VQ
(2)	95B 885 805 K	Cover	/L	1	IN4M/4A0/4A3

Model: 95B **Model life 2014>>**

Pos	Part Number	Description	Remark	Qty	Model
					I5KA
		Back seat backrest			
	95B 885 805 K YDI	Black			+VF
	95B 885 805 K YEI	Agate Grey			+VG
	95B 885 805 K YFI	Luxor Beige			+VH,+VZ
	95B 885 805 K YHI	Black/Carrera Red			+VI
	95B 885 805 K YGI	Black/Saddle Tan			+VJ
(2)	95B 885 805 L	Cover	/L	1	IN4M/4A4/5KA
		Back seat backrest			
	95B 885 805 L YDI	Black			+VF
	95B 885 805 L YEI	Agate Grey			+VG
	95B 885 805 L YFI	Luxor Beige			+VH,+VZ
	95B 885 805 L YHI	Black/Carrera Red			+VI
	95B 885 805 L YGI	Black/Saddle Tan			+VJ
(2)	95B 885 805 AB	Cover	/L 17-	1	IN2S/4A0/4A3
					I5KH
		Back seat backrest			
	95B 885 805 AB IVA	Black			+FA,+FF
	95B 885 805 AB DJM	Agate Grey			+FB,+FM
	95B 885 805 AB IVC	Luxor Beige			+FC,+FH
	95B 885 805 AB IVE	Black/Carmine Red			+FL
	95B 885 805 AB DJP	Black/Rhodium Silver			+FE,+TS
	95B 885 805 AB DJN	Saddle Tan			+FI
	95B 885 805 AB HYO	Black/Carrera Red			+TR
(2)	95B 885 805 AC	Cover	/L 17-	1	IN2S/4A4/5KH
		Back seat backrest			
		Seat heater			
	95B 885 805 AC IVA	Black			+FA,+FF
	95B 885 805 AC DJM	Agate Grey			+FB,+FM
	95B 885 805 AC IVC	Luxor Beige			+FC,+FH
	95B 885 805 AC IVE	Black/Carmine Red			+FL
	95B 885 805 AC DJP	Black/Rhodium Silver			+FE,+TS
	95B 885 805 AC DJN	Saddle Tan			+FI
	95B 885 805 AC HYO	Black/Carrera Red			+TR
(2)	95B 885 805 AA	Cover	/L	1	IN1B/N1M/4A4
					I5KH
		Back seat backrest			
	95B 885 805 AA YNI	Carrera Red			+VU,+VO
(2)	95B 885 805 D	Cover	/L	1	IN1A/N1P/4A0
					I4A3/5KA
		Back seat backrest			
	95B 885 805 D D0L	Espresso			+VR
(2)	95B 885 805 E	Cover	/L	1	IN1A/N1P/4A4
					I5KA
		Back seat backrest			
	95B 885 805 E D0L	Espresso			+VR
(2)	95B 885 805 H	Cover	/L	1	IN1A/N1P/4A0
					I4A3/5KH
		Back seat backrest			
	95B 885 805 H D0L	Espresso			+VR
(2)	95B 885 805 J	Cover	/L	1	IN1A/N1P/4A4
					I5KH
		Back seat backrest			
	95B 885 805 J D0L	Espresso			+VR
(2)	95B 885 805 R	Cover	/L	1	IN1B/N1M/4A0
					I4A3/5KA
		Back seat backrest			
	95B 885 805 R YNI	Carrera Red			+VU,+VO
(2)	95B 885 805 S	Cover	/L	1	IN1B/N1M/4A4
					I5KA
		Back seat backrest			
	95B 885 805 S YNI	Carrera Red			+VU,+VO
(2)	95B 885 805 T	Cover	/L	1	IN1B/N1M/4A0

Model: 95B **Model life 2014>>**

Pos	Part Number	Description	Remark	Qty	Model
					I4A3/5KH
		Back seat backrest			
	95B 885 805 T YNI	Carrera Red			+VU,+VO
3	95B 885 806	Cover	/R	1	IN6D/4A0/4A3
					I5KA
		Back seat backrest			
	95B 885 806 YAI	Black			+VC
	95B 885 806 YBI	Agate Grey			+VD
	95B 885 806 YCI	Luxor Beige			+VE,+VX
(3)	95B 885 806 A	Cover	/R	1	IN6D/4A4/5KA
		Back seat backrest			
	95B 885 806 A YAI	Black			+VC
	95B 885 806 A YBI	Agate Grey			+VD
	95B 885 806 A YCI	Luxor Beige			+VE,+VX
(3)	95B 885 806 B	Cover	/R	1	IN0Q/N5U/4A0
					I4A3/5KA
		Back seat backrest			
	95B 885 806 B D0D	Black			+VC,+VE,+VF,
					+VK
	95B 885 806 B YKI	Agate Grey			+VD,+VG,+VL
	95B 885 806 B D0F	Luxor Beige			+VH,+VM,+VP,
					+VX,+VZ
	95B 885 806 B YMI	Saddle Tan			+VJ,+VN
	95B 885 806 B YPI	Pebble Grey			+VQ
(3)	95B 885 806 C	Cover	/R	1	IN0Q/N5U/4A4
					I5KA
		Back seat backrest			
	95B 885 806 C D0D	Black			+VC,+VE,+VF,
					+VK
	95B 885 806 C YKI	Agate Grey			+VD,+VG,+VL
	95B 885 806 C D0F	Luxor Beige			+VH,+VM,+VP,
					+VX,+VZ
	95B 885 806 C YMI	Saddle Tan			+VJ,+VN
	95B 885 806 C YPI	Pebble Grey			+VQ
(3)	95B 885 806 F	Cover	/R	1	IN0Q/N5U/4A0
					I4A3/5KH
		Back seat backrest			
	95B 885 806 F D0D	Black			+VC,+VE,+VF,
					+VK
	95B 885 806 F YKI	Agate Grey			+VD,+VG,+VL
	95B 885 806 F D0F	Luxor Beige			+VH,+VM,+VP,
					+VX,+VZ
	95B 885 806 F YMI	Saddle Tan			+VJ,+VN
	95B 885 806 F YPI	Pebble Grey			+VQ
(3)	95B 885 806 G	Cover	/R	1	IN0Q/N5U/4A4
					I5KH
		Back seat backrest			
	95B 885 806 G D0D	Black			+VC,+VE,+VF,
					+VK
	95B 885 806 G YKI	Agate Grey			+VD,+VG,+VL
	95B 885 806 G D0F	Luxor Beige			+VH,+VM,+VP,
					+VX,+VZ
	95B 885 806 G YMI	Saddle Tan			+VJ,+VN
	95B 885 806 G YPI	Pebble Grey			+VQ
(3)	95B 885 806 K	Cover	/R	1	IN4M/4A0/4A3
					I5KA
		Back seat backrest			
	95B 885 806 K YDI	Black			+VF
	95B 885 806 K YEI	Agate Grey			+VG
	95B 885 806 K YFI	Luxor Beige			+VH,+VZ
	95B 885 806 K YHI	Black/Carrera Red			+VI
	95B 885 806 K YGI	Black/Saddle Tan			+VJ
(3)	95B 885 806 L	Cover	/R	1	IN4M/4A4/5KA

Model: 95B **Model life 2014>>**

Pos	Part Number	Description	Remark	Qty	Model
		Back seat backrest			
	95B 885 806 L YDI	Black			+VF
	95B 885 806 L YEI	Agate Grey			+VG
	95B 885 806 L YFI	Luxor Beige			+VH,+VZ
	95B 885 806 L YHI	Black/Carrera Red			+VI
	95B 885 806 L YGI	Black/Saddle Tan			+VJ
(2)	95B 885 806 AB	Cover	/R 17-	1	IN2S/4A0/4A3 I5KH
		Back seat backrest			
	95B 885 806 AB IVA	Black			+FA,+FF
	95B 885 806 AB DJM	Agate Grey			+FB,+FM
	95B 885 806 AB IVC	Luxor Beige			+FC,+FH
	95B 885 806 AB IVE	Black/Carmine Red			+FL
	95B 885 806 AB DJP	Black/Rhodium Silver			+FE,+TS
	95B 885 806 AB DJN	Saddle Tan			+FI
	95B 885 806 AB HYO	Black/Carrera Red			+TR
(3)	95B 885 806 AC	Cover	/R 17-	1	IN2S/4A4/5KH
		Back seat backrest			
		Seat heater			
	95B 885 806 AC IVA	Black			+FA,+FF
	95B 885 806 AC DJM	Agate Grey			+FB,+FM
	95B 885 806 AC IVC	Luxor Beige			+FC,+FH
	95B 885 806 AC IVE	Black/Carmine Red			+FL
	95B 885 806 AC DJP	Black/Rhodium Silver			+FE,+TS
	95B 885 806 AC DJN	Saddle Tan			+FI
	95B 885 806 AC HYO	Black/Carrera Red			+TR
(3)	95B 885 806 AA	Cover	/R	1	IN1B/N1M/4A4 I5KH
		Back seat backrest			
	95B 885 806 AA YNI	Carrera Red			+VU,+VO
(3)	95B 885 806 D	Cover	/R	1	IN1A/N1P/4A0 I4A3/5KA
		Back seat backrest			
	95B 885 806 D D0L	Espresso			+VR
(3)	95B 885 806 E	Cover	/R	1	IN1A/N1P/4A4 I5KA
		Back seat backrest			
	95B 885 806 E D0L	Espresso			+VR
(3)	95B 885 806 H	Cover	/R	1	IN1A/N1P/4A0 I4A3/5KH
		Back seat backrest			
	95B 885 806 H D0L	Espresso			+VR
(3)	95B 885 806 J	Cover	/R	1	IN1A/N1P/4A4 I5KH
		Back seat backrest			
	95B 885 806 J D0L	Espresso			+VR
(3)	95B 885 806 R	Cover	/R	1	IN1B/N1M/4A0 I4A3/5KA
		Back seat backrest			
	95B 885 806 R YNI	Carrera Red			+VU,+VO
(3)	95B 885 806 S	Cover	/R	1	IN1B/N1M/4A4 I5KA
		Back seat backrest			
	95B 885 806 S YNI	Carrera Red			+VU,+VO
(3)	95B 885 806 T	Cover	/R	1	IN1B/N1M/4A0 I4A3/5KH
		Back seat backrest			
	95B 885 806 T YNI	Carrera Red			+VU,+VO

Illustration: 817-50

PORSCHE

Model: 95B **Model life 2014>>**

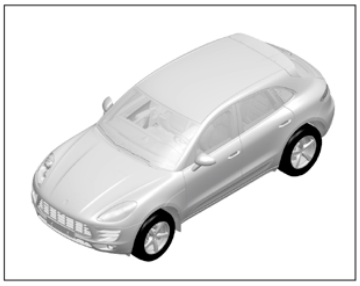

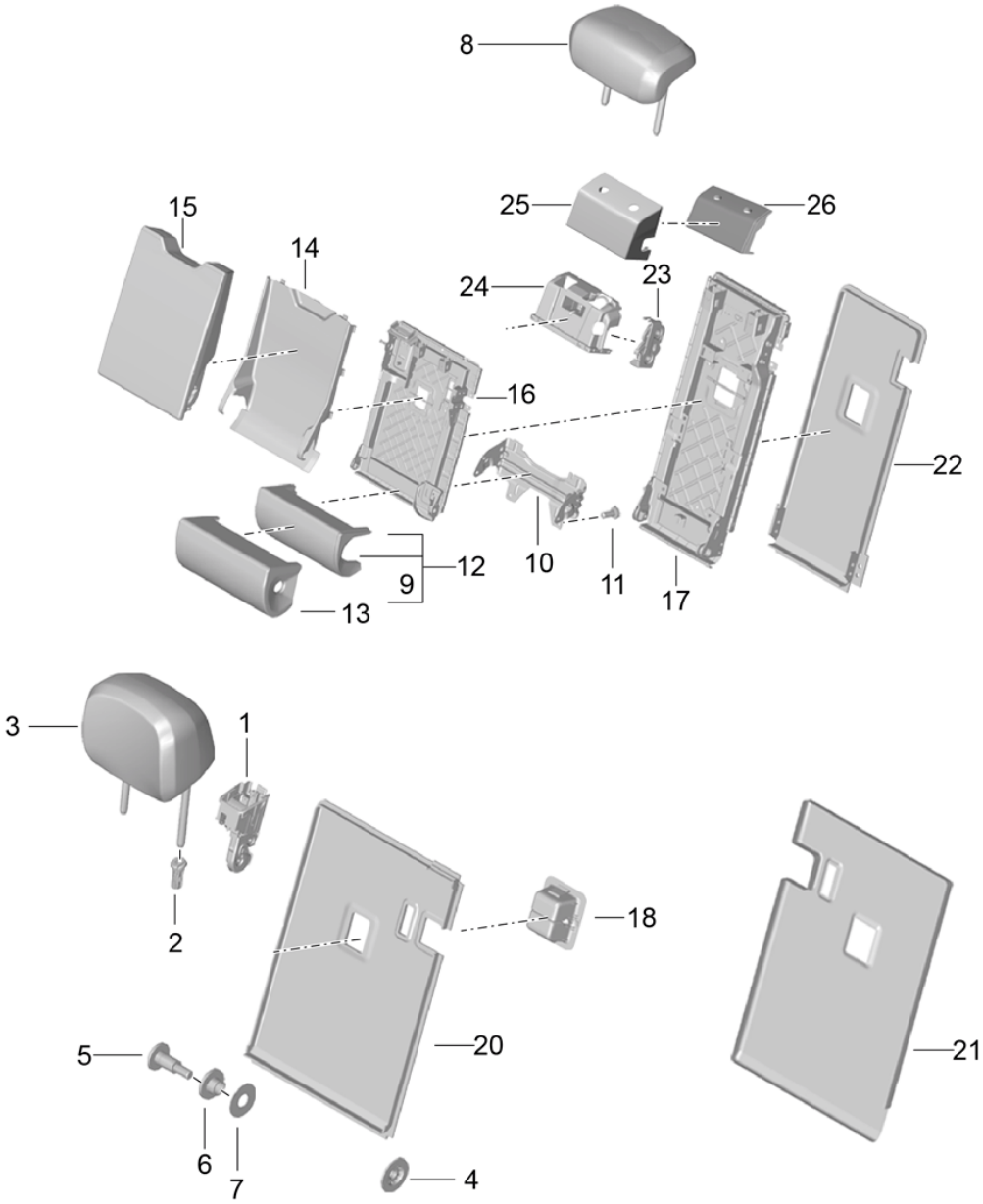

Model: 95B **Model life 2014>>**

Pos	Part Number	Description	Remark	Qty	Model
		Backrest frame			
		Release			
		Accessories			
		Head rest			
1	95B 885 681 A	Release	/L	1	
		Backrest frame			
	95B 885 681 A 82V	Titanium Black			+VC,+VJ,+VF,
					+VI,+VU,+VK,
					+VO
	95B 885 681 A OP1	Agate Grey			+VD,+VG,+VL
	95B 885 681 A 4H0	Luxor Beige			+VE,+VH,+VM,
					+VP,+VX,+VZ
	95B 885 681 A OM8	Saddle Tan			+VN
	95B 885 681 A OV4	Pebble Grey			+VQ
	95B 885 681 A 7N0	Espresso			+VR
1	95B 885 682 A	Release	/R	1	
		Backrest frame			
	95B 885 682 A 82V	Titanium Black			+VC,+VJ,+VF,
					+VI,+VU,+VK,
					+VO
	95B 885 682 A OP1	Agate Grey			+VD,+VG,+VL
	95B 885 682 A 4H0	Luxor Beige			+VE,+VH,+VM,
					+VP,+VX,+VZ
	95B 885 682 A OM8	Saddle Tan			+VN
	95B 885 682 A OV4	Pebble Grey			+VQ
	95B 885 682 A 7N0	Espresso			+VR
2	5G0 886 920	Guide sleeve	/L	1	
		Head rest			
		with			
		Key			
	5G0 886 920 82V	Titanium Black			+VC,+VJ,+VF,
					+VI,+VU,+VK,
					+VO
	5G0 886 920 OP1	Agate Grey			+VD,+VG,+VL
	5G0 886 920 4H0	Luxor Beige			+VE,+VH,+VM,
					+VP,+VX,+VZ
	5G0 886 920 OM8	Saddle Tan			+VN
	5G0 886 920 OV4	Pebble Grey			+VQ
	5G0 886 920 7N0	Espresso			+VR
(2)	5G0 886 920 C	Guide sleeve	/R	1	
		Head rest			
		with			
		Key			
	5G0 886 920 C 82V	Titanium Black			+VC,+VJ,+VF,
					+VI,+VU,+VK,
					+VO
	5G0 886 920 C OP1	Agate Grey			+VD,+VG,+VL
	5G0 886 920 C 4H0	Luxor Beige			+VE,+VH,+VM,
					+VP,+VX,+VZ
	5G0 886 920 C OM8	Saddle Tan			+VN
	5G0 886 920 C OV4	Pebble Grey			+VQ
	5G0 886 920 C 7N0	Espresso			+VR
3	95B 885 901	Head rest		1	IN6D/3J4
		Outer			
	95B 885 901 1D0	Black			+VC
	95B 885 901 OW7	Agate Grey			+VD
	95B 885 901 2E0	Luxor Beige			+VE,+VX
(3)	95B 885 901 A	Head rest		1	IN4M/3J4
		Outer	15-		I3J7
	95B 885 901 A YDI	Black			+VF
	95B 885 901 A YEI	Agate Grey			+VG
	95B 885 901 A YFI	Luxor Beige			+VH,+VZ
	95B 885 901 A YHI	Black/Carrera Red			+VI

Model: 95B **Model life 2014>>**

Pos	Part Number	Description	Remark	Qty	Model
	95B 885 901 A YGI	Black/Saddle Tan			+VJ
(3)	95B 885 901 B	Head rest		1	IN4M/5ZF
		Outer			
	95B 885 901 B YDI	Black			+VF
	95B 885 901 B YEI	Agate Grey			+VG
	95B 885 901 B YFI	Luxor Beige			+VH,+VZ
	95B 885 901 B YHI	Black/Carrera Red			+VI
	95B 885 901 B YGI	Black/Saddle Tan			+VJ
(3)	95B 885 901 C	Head rest		1	IN0Q/N5U/3J4
		Outer	15-		I3J7
	95B 885 901 C D0D	Black			+VC,+VF,+VK
	95B 885 901 C YKI	Agate Grey			+VD,+VG,+VL
	95B 885 901 C D0F	Luxor Beige			+VE,+VH,+VM,
					+VP,+VX,+VZ
	95B 885 901 C AAB	Black/Carrera Red			+VI,+VU,+VO
	95B 885 901 C YMI	Saddle Tan			+VJ,+VN
	95B 885 901 C YPI	Pebble Grey			+VQ
(3)	95B 885 901 D	Head rest		1	IN0Q/N1B/N1M
					IN5U/5ZF
		Outer	15-		I3J7
	95B 885 901 D D0D	Black			+VC,+VF,+VK
	95B 885 901 D YKI	Agate Grey			+VD,+VG,+VL
	95B 885 901 D D0F	Luxor Beige			+VE,+VH,+VM,
					+VP,+VX,+VZ
	95B 885 901 D AAB	Black/Carrera Red			+VI,+VU,+VO
	95B 885 901 D YMI	Saddle Tan			+VJ,+VN
	95B 885 901 D YPI	Pebble Grey			+VQ
(3)	95B 885 901 G	Head rest	17-	1	IE0W/N0Q/N1B
					IN1M/N2S/N5U
					I5ZD
		Outer			
		GTS			
	95B 885 901 G D0D	Black			+VF,+FA,+FF
					+VK
	95B 885 901 G YKI	Agate Grey			+VG,+FB,+FM
					+VL
	95B 885 901 G D0F	Luxor Beige			+VH,+VZ,+FC
					+FH,+VM,+VP
	95B 885 901 G AAB	Black/Carrera Red			+VU,+VO
	95B 885 901 G HHR	Black/Carmine Red			+FL,+FN
	95B 885 901 G HHW	Black/Rhodium Silver			+FE,+FK
	95B 885 901 G YMI	Saddle Tan			+FI,+VN
	95B 885 901 G YPI	Pebble Grey			+VQ
(3)	95B 885 901 H	Head rest	17-	1	IN1A/N1P/5ZD
		Outer			
		Leather			
	95B 885 901 H D0L	Espresso			+VR
(3)	95B 885 901 J	Head rest	17-	1	IN0Q/N1B/N1M
					IN2S/N5U/5ZD
		Outer			
		Leather			
		Turbo			
		Logo			
	95B 885 901 J HHW	Black/Rhodium Silver			+TS
	95B 885 901 J HAZ	Black/Carrera Red			+TR
4	5Q0 885 677	Grommet	/L /R	1	
		Bearing			
		Backrest			
5	95B 885 581	Bearing pin	/L /R	1	
		Backrest			
6	95B 885 937	Sleeve	/L /R	1	
		Bearing pin			
		Backrest			

Model: 95B **Model life 2014>>**

Pos	Part Number	Description	Remark	Qty	Model
7	95B 885 448	Spacer ring Bearing pin Backrest	/L /R	1	
8	95B 885 900	Head rest Centre		1	IN6D
	95B 885 900 1D0	Black			+VC
	95B 885 900 OW7	Agate Grey			+VD
	95B 885 900 2E0	Luxor Beige			+VE,+VX
(8)	95B 885 900 A	Head rest Centre		1	IN4M
	95B 885 900 A YDI	Black			+VF
	95B 885 900 A YEI	Agate Grey			+VG
	95B 885 900 A YFI	Luxor Beige			+VH,+VZ
	95B 885 900 A YHI	Black/Carrera Red			+VI
	95B 885 900 A YGI	Black/Saddle Tan			+VJ
(8)	95B 885 900 B	Head rest Centre		1	IN0Q/N1B/N1M IN5U
	95B 885 900 B D0D	Black			+VC,+VE,+VF, +VK
	95B 885 900 B YKI	Agate Grey			+VD,+VG,+VL
	95B 885 900 B D0F	Luxor Beige			+VH,+VM,+VP, +VX,+VZ
	95B 885 900 B OG3	Carrera Red			+VU,+VO
	95B 885 900 B YMI	Saddle Tan			+VJ,+VN
	95B 885 900 B YPI	Pebble Grey			+VQ
(8)	95B 885 900 C	Head rest Centre		1	IN1A/N1P
	95B 885 900 C D0L	Espresso			+VR
9	95B 885 778	Foam part Centre Armrest		1	
10	95B 885 961	Support Armrest Centre		1	
11	N 104 056 04	Oval-head screw Support Armrest Centre		1	
12	95B 885 778	Foam part Lower Armrest		1	
13	95B 885 853	Cover Foam part Lower Armrest		1	IN6D/5KA
	95B 885 853 1D0	Black			+VC
	95B 885 853 OW7	Agate Grey			+VD
	95B 885 853 2E0	Luxor Beige Information available			+VE,+VX
(13)	95B 885 853 A	Cover Foam part Lower Armrest		1	IN0Q/N4M/N5U I5KA/5KH
	95B 885 853 A 8YR	Black			+VC,+VJ,+VF, +VI,+VU,+VK
	95B 885 853 A PL1	Agate Grey			+VD,+VG,+VL
	95B 885 853 A 9H6	Luxor Beige			+VE,+VH,+VM, +VP,+VX,+VZ
	95B 885 853 A OG3	Carrera Red			+VO
	95B 885 853 A OK6	Saddle Tan			+VN
	95B 885 853 A PQ4	Pebble Grey			+VQ

Model: 95B **Model life 2014>>**

Pos	Part Number	Description	Remark	Qty	Model
14	95B 885 219	Trim cover		1	IN0Q/N1A/N1B IN1M/N1P/N4M IN5U/N6D
		Ski bag Armrest Centre			
	95B 885 219 82V	Titanium Black			+VC,+VJ,+VF, +VI,+VU,+VK, +VO
	95B 885 219 OP1	Agate Grey			+VD,+VG,+VL
	95B 885 219 4H0	Luxor Beige			+VE,+VH,+VM, +VP,+VX,+VZ
	95B 885 219 OM8	Saddle Tan			+VN
	95B 885 219 OV4	Pebble Grey			+VQ
	95B 885 219 7N0	Espresso			+VR
15	95B 885 081	Armrest Centre Back seat backrest		1	IN6D/4M3
	95B 885 081 1D0	Black			+VC
	95B 885 081 OW7	Agate Grey			+VD
	95B 885 081 2E0	Luxor Beige			+VE,+VX
(15)	95B 885 081 A	Armrest		1	IN0Q/N4M/N5U I4M3/5KA/5KH
		Centre			IN0Q/N4M/N5U I5KA/5KH
		Back seat backrest			
	95B 885 081 A 8YR	Black			+VC,+VJ,+VF, +VI,+VU,+VK
	95B 885 081 A PL1	Agate Grey			+VD,+VG,+VL
	95B 885 081 A 9H6	Luxor Beige			+VE,+VH,+VM, +VP,+VX,+VZ
	95B 885 081 A OG3	Carrera Red			+VO
	95B 885 081 A OK6	Saddle Tan			+VN
	95B 885 081 A PQ4	Pebble Grey			+VQ
(15)	95B 885 081 B	Armrest Centre Back seat backrest		1	IN1A/N1P IN1A/N1P/4M3
	95B 885 081 B 8C0	Espresso			+VR
(15)	95B 885 081 C	Armrest Centre Back seat backrest		1	IN6D/4M0
	95B 885 081 C 1D0	Black			+VC
	95B 885 081 C OW7	Agate Grey			+VD
	95B 885 081 C 2E0	Luxor Beige			+VE,+VX
(15)	95B 885 081 D	Armrest		1	IN0Q/N4M/N5U I4M0/5KA/5KH
		Centre Back seat backrest			
	95B 885 081 D 8YR	Black			+VC,+VJ,+VF, +VI,+VU,+VK
	95B 885 081 D PL1	Agate Grey			+VD,+VG,+VL
	95B 885 081 D 9H6	Luxor Beige			+VE,+VH,+VM, +VP,+VX,+VZ
	95B 885 081 D OG3	Carrera Red			+VO
	95B 885 081 D OK6	Saddle Tan			+VN
	95B 885 081 D PQ4	Pebble Grey			+VQ
(15)	95B 885 081 E	Armrest Centre Back seat backrest		1	IN1A/N1P/4M0
	95B 885 081 E 8C0	Espresso			+VR
(15)	95B 885 081 F	Armrest Centre Back seat backrest		1	IN6D/4M3

Model: 95B **Model life 2014>>**

Pos	Part Number	Description	Remark	Qty	Model
	95B 885 081 F 1D0	Black			+VC
	95B 885 081 F OW7	Agate Grey			+VD
	95B 885 081 F 2E0	Luxor Beige			+VE,+VX
(15)	95B 885 081 G	Armrest		1	IN0Q/N1B/N1M
					IN4M/N5U/4M3
					I5KA/5KH
		Centre			
		Back seat backrest			
	95B 885 081 G 8YR	Black			+VC,+VJ,+VF,
					+VI,+VU,+VK
	95B 885 081 G PL1	Agate Grey			+VD,+VG,+VL
	95B 885 081 G 9H6	Luxor Beige			+VE,+VH,+VM,
					+VP,+VX,+VZ
	95B 885 081 G OG3	Carrera Red			+VO
	95B 885 081 G OK6	Saddle Tan			+VN
	95B 885 081 G PQ4	Pebble Grey			+VQ
(15)	95B 885 081 H	Armrest		1	IN1A/N1P/4M3
		Centre			
		Back seat backrest			
	95B 885 081 H 8C0	Espresso			+VR
16	95B 885 501	Rear wall	/L	1	
		Backrest frame			
		Bodyshell			
(16)	95B 885 502	Rear wall	/R	1	
		Backrest frame			
		Bodyshell			
17	95B 885 070	Rear wall		1	
		Backrest frame			
		Bodyshell			
		Centre			
		Armrest			
18	958 522 301 00	Cap		1	IB0A/B0N
		Backrest frame			IB0L/B0M/B1C
					IB1D/B1P/B2A
					IB2G/B2H
		Rear wall			
		Mount			
		Child car seat			
	958 522 301 00 82V	Titanium Black			+VC,+VJ,+VF,
					+VI,+VU,+VK,
					+VO,+VX,+VZ
	958 522 301 00 OP1	Agate Grey			+VD,+VG,+VL,
					+VQ
	958 522 301 00 4H0	Luxor Beige			+VE,+VH,+VM
	958 522 301 00 OM8	Saddle Tan			+VN,+VP
	958 522 301 00 7N0	Espresso			+VR
(18)	8R0 887 301 B	Cap		1	IB0D/B0E/B0R
		Backrest frame			
		Rear wall			
		Mount			
		Child car seat			
	8R0 887 301 B 82V	Titanium Black			+VC,+VJ,+VF,
					+VI,+VU,+VK,
					+VO,+VX,+VZ
	8R0 887 301 B OP1	Agate Grey			+VD,+VG,+VL,
					+VQ
	8R0 887 301 B 4H0	Luxor Beige			+VE,+VH,+VM
	8R0 887 301 B OM8	Saddle Tan			+VN,+VP
	8R0 887 301 B 7N0	Espresso			+VR
20	95B 885 753	Pad	/L	1	
		Rear wall			
	95B 885 753 ZG1	Black			+VC,+VJ,+VF,
					+VI,+VU,+VK,

Model: 95B **Model life 2014>>**

Pos	Part Number	Description	Remark	Qty	Model
					+VO,+VX,+VZ
	95B 885 753 ZP4	Agate Grey			+VD,+VG,+VL,
					+VQ
	95B 885 753 ZN3	Luxor Beige			+VE,+VH,+VM
	95B 885 753 ZR5	Saddle Tan			+VN,+VP
	95B 885 753 OF2	Espresso			+VR
20	95B 885 754	Pad	/R	1	
		Rear wall			
	95B 885 754 ZG1	Black			+VC,+VJ,+VF,
					+VI,+VU,+VK,
					+VO,+VX,+VZ
	95B 885 754 ZP4	Agate Grey			+VD,+VG,+VL,
					+VQ
	95B 885 754 ZN3	Luxor Beige			+VE,+VH,+VM
	95B 885 754 ZR5	Saddle Tan			+VN,+VP
	95B 885 754 OF2	Espresso			+VR
21	95B 885 754	Pad	/R	1	
		Rear wall			
	95B 885 754 ZG1	Black			+VC,+VJ,+VF,
					+VI,+VU,+VK,
					+VO,+VX,+VZ
	95B 885 754 ZP4	Agate Grey			+VD,+VG,+VL,
					+VQ
	95B 885 754 ZN3	Luxor Beige			+VE,+VH,+VM
	95B 885 754 ZR5	Saddle Tan			+VN,+VP
	95B 885 754 OF2	Espresso			+VR
22	95B 885 611	Pad		1	
		Rear wall			
		Centre			
	95B 885 611 ZG1	Black			+VC,+VJ,+VF,
					+VI,+VU,+VK,
					+VO,+VX,+VZ
	95B 885 611 ZP4	Agate Grey			+VD,+VG,+VL,
					+VQ
	95B 885 611 ZN3	Luxor Beige			+VE,+VH,+VM
	95B 885 611 ZR5	Saddle Tan			+VN,+VP
	95B 885 611 OF2	Espresso			+VR
23	95B 883 481	Lock		1	
		Backrest			
		Collapsible			
24	95B 886 165 A	Release		1	
		Lock			
		Backrest			
		Collapsible			
25	95B 885 828 C	Cover		1	IN6D/5KA
		Armrest			
		Upper			
		Leatherette			
	95B 885 828 C 1D0	Black			+VC
	95B 885 828 C OW7	Agate Grey			+VD
	95B 885 828 C 2E0	Luxor Beige			+VE,+VX
(25)	95B 885 828 D	Cover		1	IN4M/5KA/5KH
		Armrest			
		Upper			
		Plain leather			
	95B 885 828 D 8YR	Black			+VC,+VJ,+VF,
					+VI,+VU,+VK
	95B 885 828 D PL1	Agate Grey			+VD,+VG,+VL
	95B 885 828 D 9H6	Luxor Beige			+VE,+VH,+VM
					+VP,+VX,+VZ
	95B 885 828 D OK6	Saddle Tan			+VN
	95B 885 828 D OG3	Carrera Red			+VO
	95B 885 828 D PQ4	Pebble Grey			+VQ

Model: 95B **Model life 2014>>**

Pos	Part Number	Description	Remark	Qty	Model
(25)	95B 885 828 E	Cover		1	IN1A/N1P/5KA I5KH
		Armrest Upper Natural leather			
	95B 885 828 E 8C0	Espresso			+VR
26	95B 885 777	Foam part Armrest Upper		1	

Illustration: 817-55

PORSCHE

Model: 95B **Model life 2014>>**

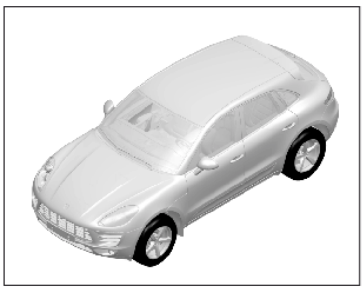

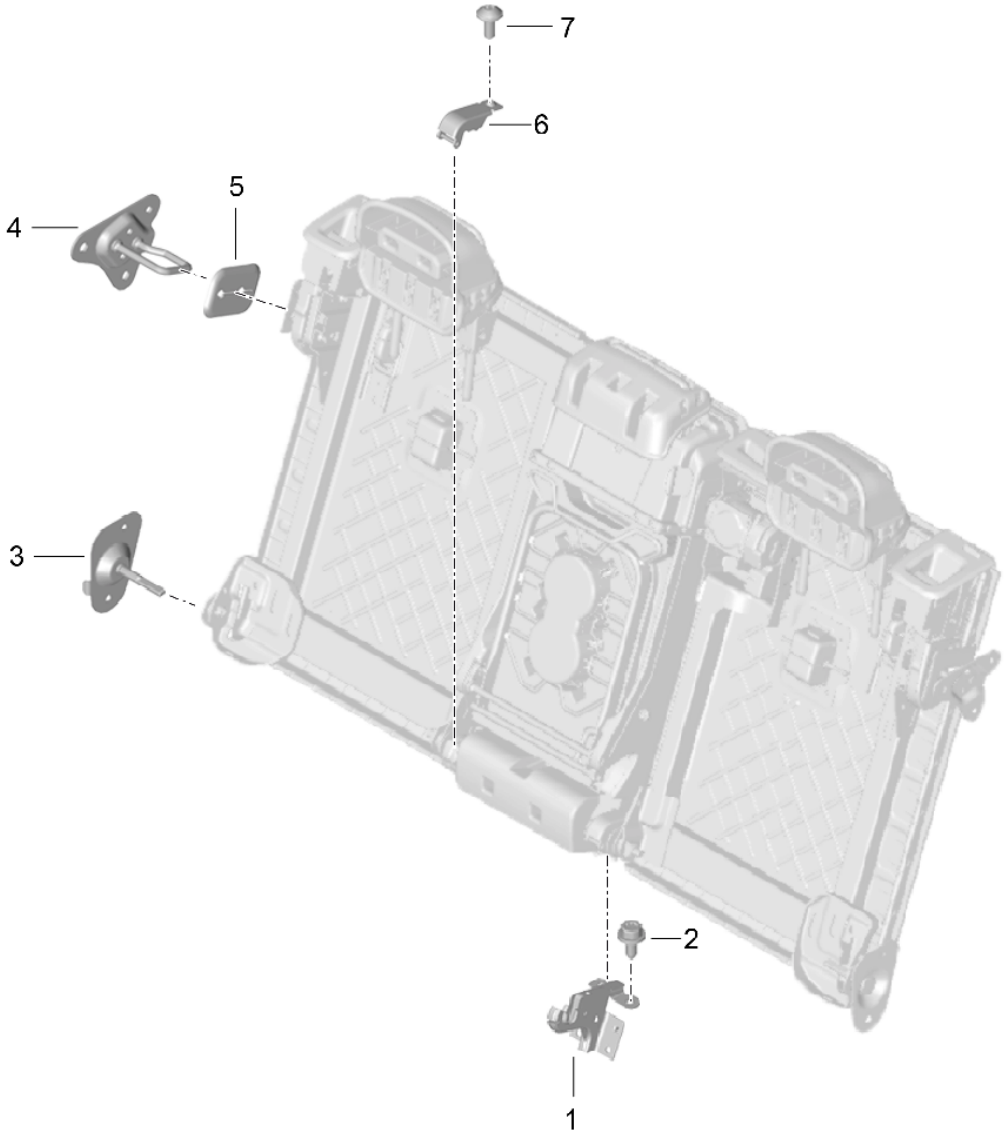

Model: 95B **Model life 2014>>**

Pos	Part Number	Description	Remark	Qty	Model
		Support Backrest And Seat frame Mounting Mounting parts			
1	95B 886 185	Bearing Centre part Left	/L	1	
(1)	95B 886 186	Bearing Centre part Right	/R	1	
2	N 907 870 03	Screw Bearing	/L /R	1	
3	95B 886 174	Bearing Backrest Wheel housing	/R	1	
(3)	95B 886 173	Bearing Backrest Wheel housing	/L	1	
4	95B 886 162	Bearing Backrest C-pillar	/R	1	
(4)	95B 886 161	Bearing Backrest C-pillar	/L	1	
5	95B 885 678	Grommet Bearing C-pillar	/L /R	1	
	95B 885 678 1E0	Black			+VC,+VJ,+VF, +VI,+VU,+VK, +VO
	95B 885 678 OP1	Agate Grey			+VD,+VG,+VL
	95B 885 678 4H0	Luxor Beige			+VE,+VH,+VM, +VP,+VX,+VZ
	95B 885 678 OM8	Saddle Tan			+VN
	95B 885 678 OV4	Pebble Grey			+VQ
	95B 885 678 7N0	Espresso			+VR
6	95B 886 617 A	Catch bar Bearing Centre	/R	1	
(6)	95B 886 617	Catch bar Bearing Centre	/L	1	
7	N 907 378 03	Round head screw Catch bar Bearing Centre	/L /R	1	

Illustration: 898-00

PORSCHE

Model: 95B **Model life 2014>>**

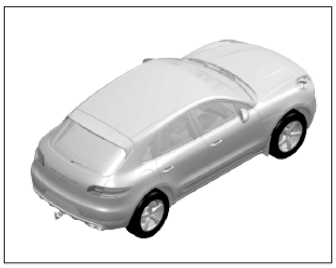

Model: 95B **Model life 2014>>**

Pos	Part Number	Description	Remark	Qty	Model
		Set of locks Comprising: Glove compartment lock Supporting bow with Lock cylinder Emergency key Key tag Handheld transmitter			
1	95B 898 375	Set of locks VIN Indicate	/LL	1	ECE IL0L/4K0/4K3
(1)	95B 898 375 A	Set of locks VIN Indicate	/LL	1	ECE IL0L/4F2/4F6
(1)	95B 898 375 B	Set of locks VIN Indicate	/RL	1	ECE IL0R/4K0/4K3
(1)	95B 898 375 C	Set of locks VIN Indicate	/RL	1	ECE IL0R/4F2/4F6
(1)	95B 898 375 F	Set of locks VIN Indicate	/RL	1	USA IL0R/4K0/4K3
(1)	95B 898 375 G	Set of locks VIN Indicate	/RL	1	USA IL0R/4F2/4F6
(1)	95B 898 375 H	Set of locks VIN Indicate	/LL	1	Japan IL0L/4K0/4K3
(1)	95B 898 375 J	Set of locks VIN Indicate	/LL	1	Japan IL0L/4F2/4F6
(1)	95B 898 375 K	Set of locks VIN Indicate	/RL	1	Japan IL0R/4K0/4K3
(1)	95B 898 375 L	Set of locks VIN Indicate	/RL	1	Japan IL0R/4F2/4F6
(1)	95B 898 375 M	Set of locks VIN Indicate	/LL	1	Korea IL0L/4K0/4K3
(1)	95B 898 375 N	Set of locks VIN Indicate	/LL	1	Korea IL0L/4F2/4F6
(1)	95B 898 375 P	Set of locks VIN Indicate	/RL	1	Korea IL0R/4K0/4K3
(1)	95B 898 375 Q	Set of locks	/RL	1	Korea IL0R/4F2/4F6

Illustration: 898-00

PORSCHE

Model: 95B **Model life 2014>>**

Pos	Part Number	Description	Remark	Qty	Model
		VIN Indicate			

Illustration: 901-00

PORSCHE

Model: 95B **Model life 2014>>**

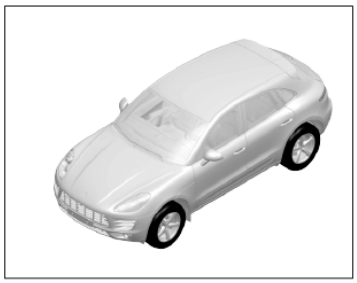

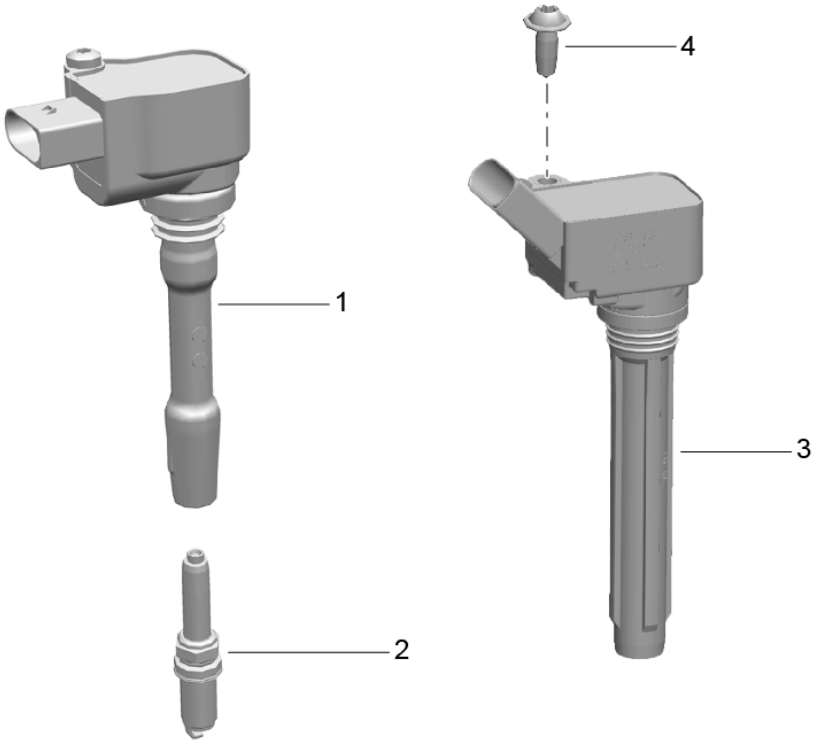

Model: 95B **Model life 2014>>**

Pos	Part Number	Description	Remark	Qty	Model
		Ignition system			
1	946 602 104 00	Ignition coil		X	MCT.LA/MA
2	999 170 233 90	Spark plug FR5 NPP		6	MCT.LA/MA
(2)	958 170 320 91	Glow plug		6	DIESEL MCD.UD MCT.BA/BB/BC
(2)	999 170 233 90	Spark plug FR5 NPP		6	MCT.LA/MA
(2)	958 905 601 00	Spark plug NGK		4	R4 TFSI MCN.CC MCY.NA
3	958 905 110 00	Ignition coil	-15	4	R4 TFSI MCN.CC MCY.NA
3	958 905 110 01	Ignition coil	16-	4	R4 TFSI MCN.CC MCY.NA
4	N 909 252 02	Round head screw M 6 X 16		4	MCN.CC MCY.NA

Illustration: 901-03

PORSCHE

Model: 95B **Model life 2014>>**

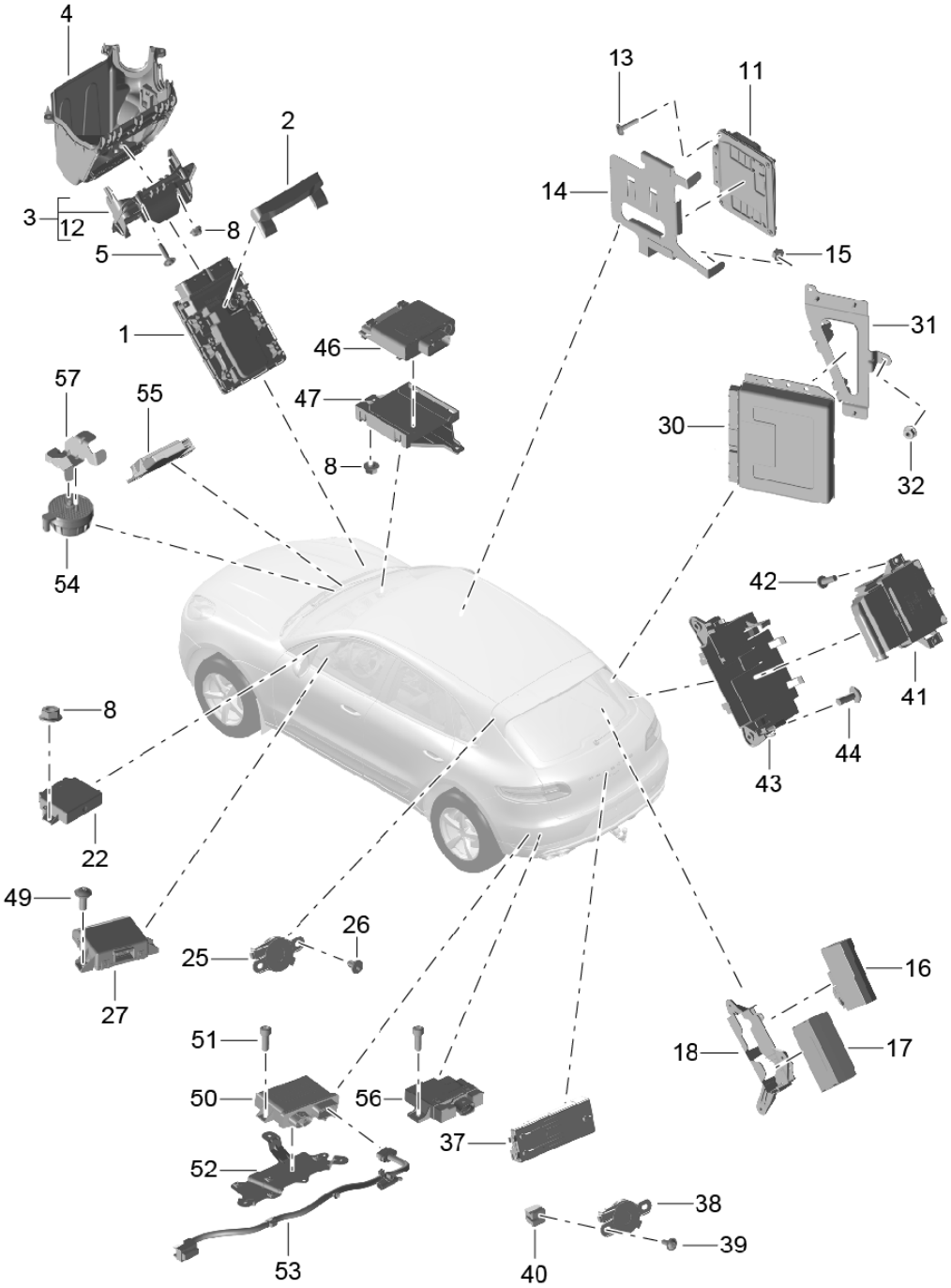

Model: 95B **Model life 2014>>**

Pos	Part Number	Description	Remark	Qty	Model
		Control units Engine and transmission Lock control Oil pump Trailer coupling Reversing camera ParkAssist Gateway Level adjustment Rear lid Electric parking brake Fuel pump Start/Stop			
1	95B 906 022 B	Control unit - dme -		1	MCT.LA/MA MDC.NA
(1)	059 907 309 A	Control unit - dme -		1	MCD.UD MCP.NB MCT.BA/BB/BC
(1)	06K 907 425 B	Control unit - dme -		1	MCN.CC
2	95B 907 352 A	Sound absorber Control unit		1	
3	8K0 907 461 D	Support Control unit - dme -		1	
4		Fusebox Lower part See illustrations 9/02/08		1	
5	N 910 252 01	Screw M6 X 30		4	
8	N 015 082 10	Hexagon nut M 6		2	
11	95B 927 771 C	Control unit Lock control Transverse		1	I1Y1
(11)	95B 927 771 H	Control unit Lock control Transverse		1	I1Y1
12	8K0 907 461 D	Support		1	I1Y1
(12)	95B 907 471	Support		1	IL0R/1Y1
13	N 910 252 01	Screw M6X30		4	
14	95B 907 331	Support		1	I1Y1
15	N 015 082 10	Hexagon nut M6		2	I1Y1
16	4H0 907 383 L	Control unit Trailer coupling		1	I1D3
(17)	7PP 907 556 AA	Control unit Camera		1	I8A4
19	4G0 906 093 H	Control unit Fuel pump		1	I2G0/2G1
(19)	4G0 906 093 J	Control unit Fuel pump		1	I2G4
22	95B 919 475 A	Control unit ParkAssist	-16	1	I7X2/7X8/8A4
(22)	95B 919 475 L	Control unit ParkAssist	17-	1	I7X2/7X8/8A4
25	8E0 919 279	Loudspeaker ParkAssist		1	I4E7
26	N 911 635 01	Expansion rivet		3	I7X2/7X8

Model: 95B **Model life 2014>>**

Pos	Part Number	Description	Remark	Qty	Model
27	95B 907 530 C	Control unit Gateway	-16	1	
27	95B 907 530 F	Control unit Gateway	16-	1	
30		Control unit Level adjustment See illustrations 6/06/00		1	I1BK
(30)		Control unit Level adjustment See illustrations 6/06/00		1	I1BH
31		Support See illustrations 6/06/00		1 1 1	I1BH/1BK
32		Hexagon nut See illustrations 6/06/00		6	I1BH/1BK
37	7P5 959 107 E	Control unit Rear lid		1	I4E7
38	8E0 919 279	Loudspeaker Warning function		1	I4E7
39	N 909 868 03	Round head screw ST 4,2 X 13		2	I4E7
40	N 905 410 01	Expander nut		2	I4E7
41	95B 907 801 B	Control unit Electric parking brake		1	
42	N 101 243 09	Oval-head screw M 6 X 20		2	
43	95B 907 371 C	Support Electric parking brake		1	
44	N 106 320 03	Oval-head screw M 6 X 20		2	
46	8K0 959 663	Voltage converter Start/Stop		1	I7L4/7L8
47	8R0 907 371	Support Voltage converter Start/Stop		1	I7L4/7L8
49	N 909 446 04	Fastening screw M5X12		1	
50	4G0 907 355 C	Control unit Emission control	15-	1	I1E9
51	N 105 464 03	Pan-head screw M6X16	15-	2	
52	95B 201 187	Support Control unit Emission control	15-	1	I1E9
53	95B 971 765	Wiring harness Control unit Emission control To Pump	15- 15-	1	 I1E9
54	4H0 907 601 D	Pulse sender Engine noises		1	I2HB
55	8R0 907 159 D	Control unit Pulse sender Engine noises		1	I2HB
(55)	95B 907 159	Control unit Pulse sender Engine noises		1	IE0W
(55)	95B 907 159 A	Control unit Pulse sender		1	

Model: 95B **Model life 2014>>**

Pos	Part Number	Description	Remark	Qty	Model
		Engine noises			
56	8R0 907 160 C	Control unit		1	I0P8/0P9
		Sport			
		Exhaust system			
57	95B 805 345	Support		1	I2HB
		Pulse sender			
		Engine noises			

Illustration: 901-04

Model: 95B **Model life 2014>>**

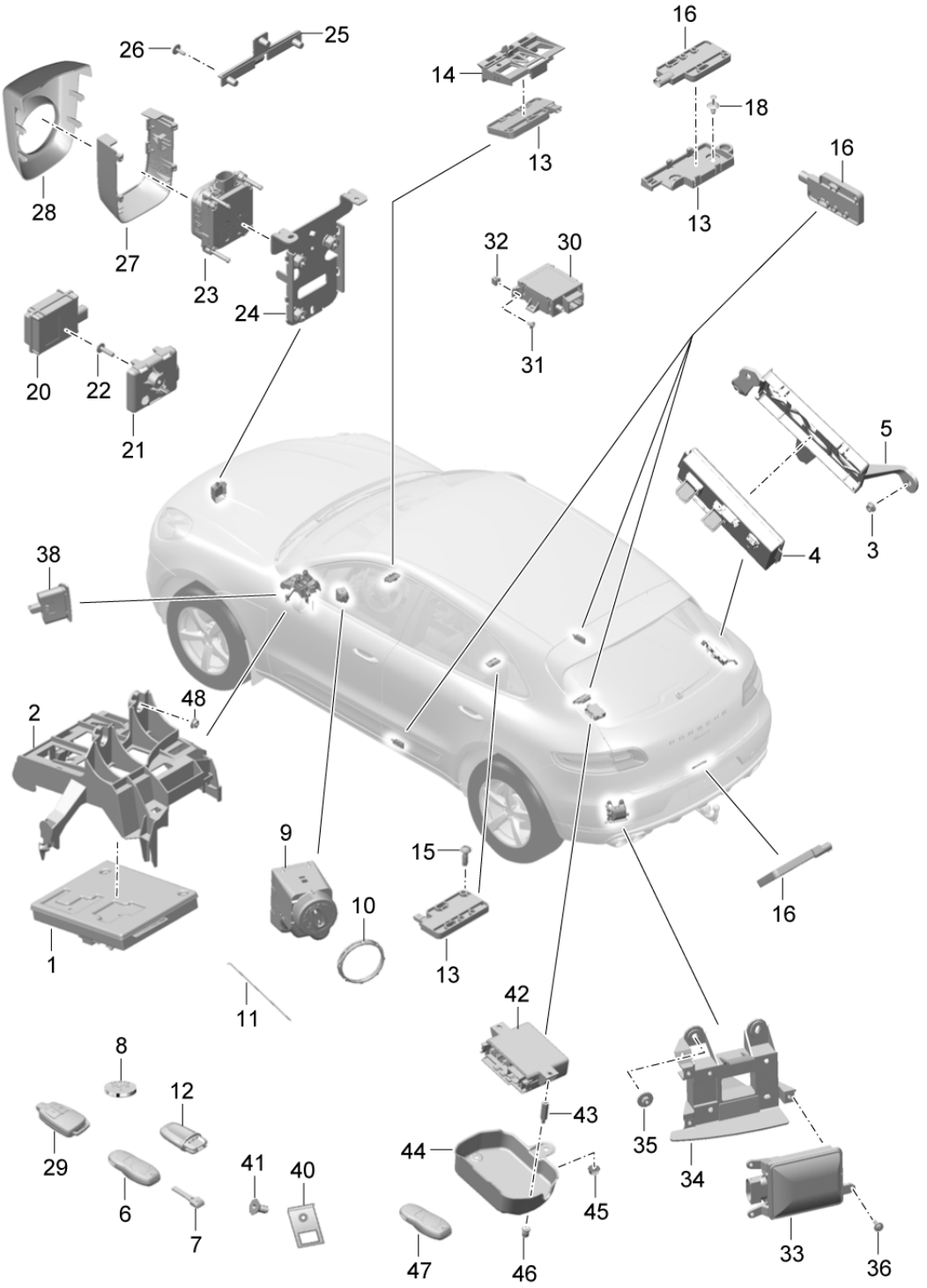

Model: 95B **Model life 2014>>**

Pos	Part Number	Description	Remark	Qty	Model
		Control units Electronics Body front section Rear end Ignition starter switch Handheld transmitter Garage door opener Receiving part Auxiliary heater Antenna Distance sensor Lane Change Assistant			
1	7PP 907 064 HJ	Control unit Electronics Body front section		1	I4K3/5D8
1	7PP 907 064 HK	Control unit Electronics Body front section		1	I4K3/5D1
1	7PP 907 064 HL	Control unit Electronics Body front section		1	I4K0/4K3/5D2 I5D3
1	7PP 907 064 HM	Control unit Electronics Body front section	-16	1	I4F2/5D8
1	9A7 907 064 10	Control unit Electronics Body front section	17-	1	I4F2/5D8
1	7PP 907 064 HN	Control unit Electronics Body front section	-16	1	I4F2/5D1
1	9A7 907 064 20	Control unit Electronics Body front section	17-	1	I4F2/5D1
1	7PP 907 064 HP	Control unit Electronics Body front section	-16	1	I4F2/4F6/5D2 I5D3
2	95B 907 461	Support Control unit Electronics Body front section	/LL	1	IL0L
2	95B 907 461 A	Support Control unit Electronics Body front section	/RL	1	IL0R
3	N 015 082 10	Hexagon nut M6		X	
4	958 618 279 15	Control unit Electronics Rear end		1	
5	95B 907 462 A	Support Control unit Electronics Rear end		1	
6	958 637 946 02	Handheld transmitter Key cover Vehicle Ident. No. Indicate		1	I5D1
6	958 637 950 02	Handheld transmitter Key cover Vehicle Ident. No. Indicate	13-	1	I5D8

Model: 95B **Model life 2014>>**

Pos	Part Number	Description	Remark	Qty	Model
(6)	958 637 948 02	Handheld transmitter Key cover Vehicle Ident. No. Indicate		1	I5D3
(6)	958 637 947 02	Handheld transmitter Key cover Vehicle Ident. No. Indicate		1	I5D2
7	958 538 916 00	Emergency key with stipulated lock number Vehicle Ident. No. Indicate		1	
8	999 611 108 00	Battery Handheld transmitter		1	
9	7PP 905 865 F	Control unit Ignition starter switch		1	
10	7PP 911 094	Nut		1	
11	7PP 907 256	Emergency operation Release Ignition starter switch		1	
12	7PP 919 157 A	Control part		1	
13	7PP 962 132 A	Antenna Dashboard And Centre console		2	I4F2/4F6
14	95B 962 283 C	Support KESSY Dashboard		1	I4F2/4F6
15	N 104 159 03	Oval-head screw M 4 X 12		4	
16	7PP 962 132	Antenna Door sill Luggage compartment Rear end		4	I4F2/4F6
17	95B 962 283	Support Antenna Luggage compartment		1	I4F2/4F6
18	N 911 585 01	Expansion rivet		2	I4F2/4F6
20	8K0 907 410	Control unit Garage door opener		1	IVC1
(20)	8K0 907 410 C	Control unit Garage door opener		1	IVC2
21	95B 907 392	Support Control unit Garage door opener		1	IVC1/VC2
22	N 106 444 04	Lens-head screw M6X22		1	
23	95B 907 567 B	Control unit ACC		1	I8T3
24	95B 971 303 A	Support Control unit ACC		1	I8T3
-	970 605 287 00	Clip for Support Control unit ACC		3	I8T3
-	970 605 901 00	Repair kit Comprising: Clip Adjusting screw		1 3 2	

Model: 95B **Model life 2014>>**

Pos	Part Number	Description	Remark	Qty	Model
		Screw		1	
		Clip		3	
25	95B 907 699	Adapter Support ACC		1	I8T3
26	N 909 747 01	Oval-head sheetmetal screw TP5X16		3	
27	991 605 188 00	Trim cover Rear		1	I8T3
	991 605 188 00 1E0	Black			
28	95B 957 053 B	Trim cover Front part		1	I8T3
	95B 957 053 B 1E0	Black			
-	999 919 257 01	Oval-head screw 6 X 20		2	I8T3
29	7PP 963 511 B	Handheld transmitter Auxiliary heater		1	I9M9
30	8K0 963 271	Control unit Receiving part Auxiliary heater		1	I9M9
31	N 106 737 01	Tapping screw 4,2 X 9,5		2	I9M9
32	N 905 410 01	Expander nut		2	I9M9
33	8T0 907 566 B	Control unit Lane Change Assistant Left		1	I7Y1/7Y3/7Y7
(33)	8T0 907 568 B	Control unit Lane Change Assistant Right		1	I7Y1/7Y3/7Y7
34	95B 907 509 A	Support Lane Change Assistant Left		1	I7Y1/7Y3
(34)	95B 907 510 A	Support Lane Change Assistant Right		1	I7Y1/7Y3
35	N 905 708 03	Hexagon nut M 6		6	I7Y1/7Y3
36	999 073 255 09	Combination screw M 5 X 14		6	I7Y1/7Y3
38	95B 953 039	Warning light Lane Change Assistant Door mirror	/LL /L	1	IL0L/7Y1/7Y3
(38)	95B 953 040	Warning light Lane Change Assistant Door mirror	/LL /R	1	IL0L/7Y1/7Y3
(38)	95B 953 039 A	Warning light Lane Change Assistant Door mirror	/RL /L	1	IL0R/7Y1/7Y3
(38)	95B 953 040 A	Warning light Lane Change Assistant Door mirror	/RL /R	1	IL0R/7Y1/7Y3
40	991 637 301 00	Eye		1	
41	991 637 303 00	Countersunk-head screw		1	
42	7PP 035 620 J	Control unit VTS vehicle tracking	-16	1	I7G9/7I2
36	9A7 637 620 01	Control unit VTS vehicle tracking	17-	1	I7G9/7I0/7I2
43	7PP 971 952	Spacer		2	I7G9/7I0/7I2

Model: 95B **Model life 2014>>**

Pos	Part Number	Description	Remark	Qty	Model
		M 6			
44	95B 963 213	Support		1	I7I0/7I2
		Control unit			
		VTS vehicle tracking			
45	N 015 082 10	Hexagon nut		2	
		M6			
46	WHT 006 947	Shear-off nut		5	
		M 6 - SB			
47	7PP 862 423	Handheld transmitter		1	I7I0/7I2
-	7PP 862 077	System		1	I7I2
		Card			
		VTS vehicle tracking			
48	N 902 867 03	Hexagon nut		X	
		M6			
		Antenna booster			
		Auxiliary heater			
		See illustrations			
		9/11/10			
		Alarm siren			
		Control unit			
		Tilt sensor			
		See group			
		9/03/00			

Illustration: 901-05

Model: 95B **Model life 2014>>**

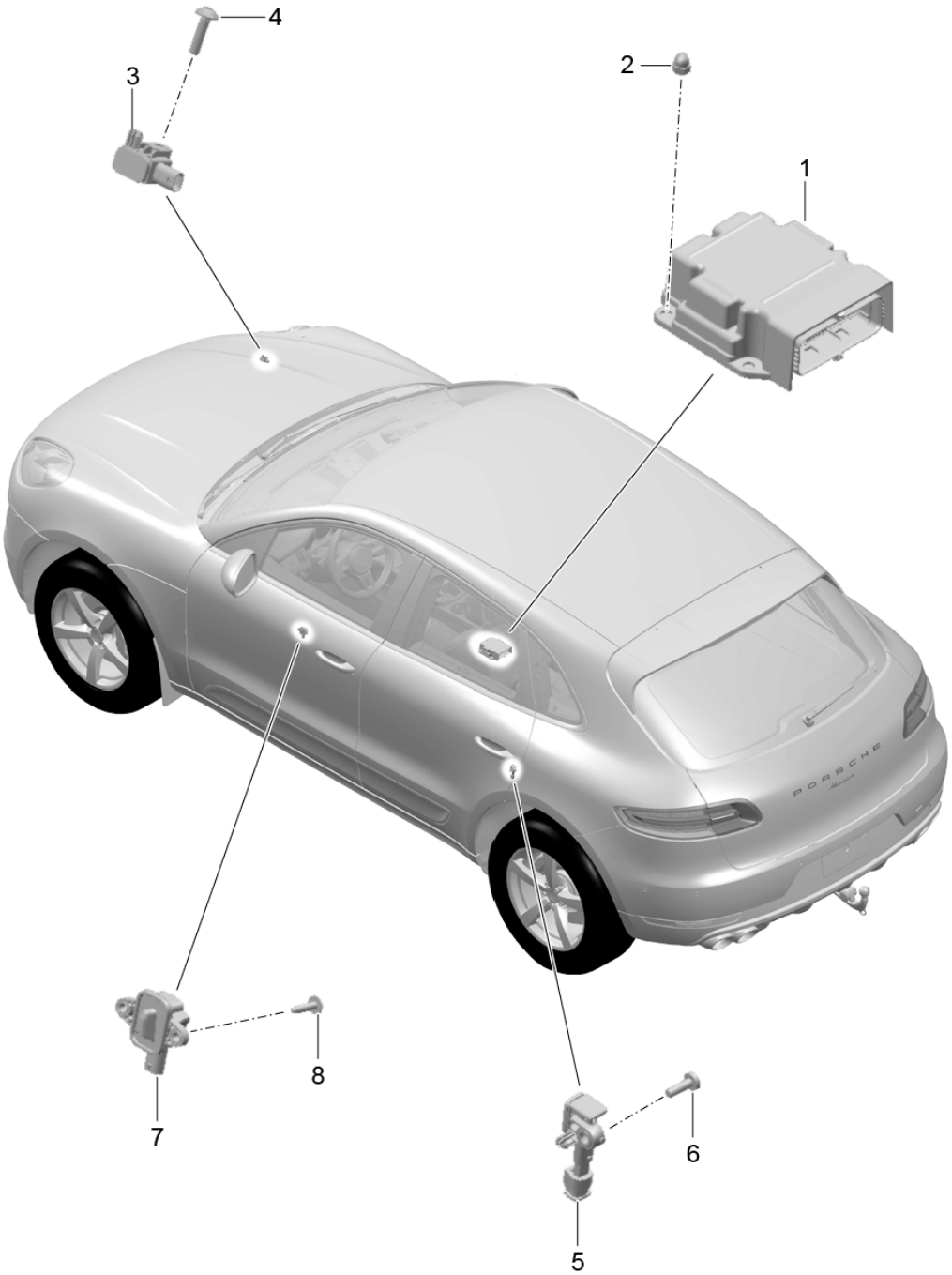

Model: 95B **Model life 2014>>**

Pos	Part Number	Description	Remark	Qty	Model
		Control unit Sensor Airbag Airbag unit See group 8/12/50 Switch Airbag See group 9/03/05			
1	95B 959 655 C	Control unit Airbag F >>A5FLB 60210		1	
1	95B 959 655 D	Control unit Airbag F A5FLB 60210>>		1	
2	955 618 419 21	Cap nut M 6		3	
3	2H0 959 652	Front sensor		2	
4	N 106 321 02	Oval-head screw M 6 X 25		2	
5	958 618 222 00	Sensor C-pillar		2	
6	N 101 961 03	Oval-head screw M 6 X 18		2	
7	4H0 955 557	Pressure sensor Doors		2	
8	N 106 847 01	Oval-head screw M 6 X 20		4	

Illustration: 902-00

PORSCHE

Model: 95B **Model life 2014>>**

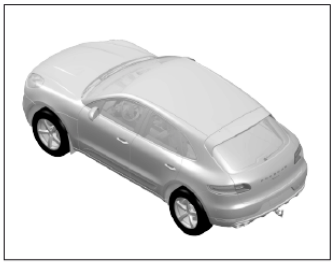

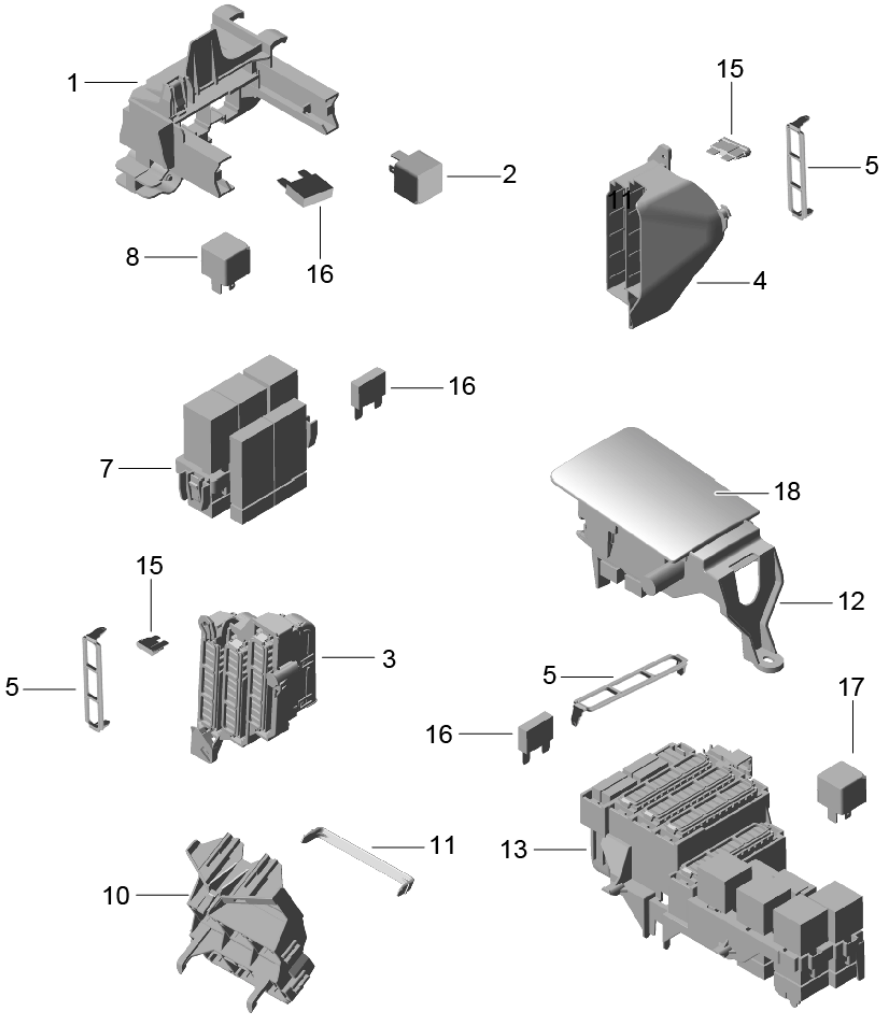

Model: 95B **Model life 2014>>**

Pos	Part Number	Description	Remark	Qty	Model
		Fusebox			
		Relay carrier			
1	8K1 937 503 C	Relay carrier 1		1	IL0L
		Front			
		Driver's side			
(1)	4G2 937 503 A	Relay carrier 1		1	IL0R
		Front			
		Driver's side			
2		Relay		X	
(2)	4H0 951 253 C	Relay		1	
		Fanfare			
		Relay socket/code:	S1/2		
(2)	958 615 029 00	Relay		1	
		Level adjustment			
		Relay socket/code:	S1/3		
(2)	999 607 011 00	Fuse		1	
		40 A MAXI			
		Relay socket/code:	S1/B		
3	8K0 971 845	Fuse holder		1	IL0L
		Driver's side			
4	95B 971 846	Fuse holder		1	IL0L
		Passenger's side			
(4)	95B 971 846 A	Fuse holder		1	IL0R
		Passenger's side			
5	8K0 971 981 A	Cap		X	
		Fuse holder			
7	4F1 937 503 A	Relay carrier		1	
		Dashboard			
8		Relay		X	
(8)	958 615 029 00	Relay		X	
		Relay socket/code:	S2/2		
(8)	958 615 008 01	Relay		1	
		VAKUUMPUMPE			
		Relay socket/code:	S2/3		
9		Lock		X	
(9)	999 607 011 00	Fuse		1	
		40A			
		Relay socket/code:	S2/C		
(9)	999 607 013 00	Fuse		1	
		60A			
		Relay socket/code:	S2/D		
10	8K0 937 545 B	Relay carrier 2		1	
		Footwell			
11	8D0 937 083	Retaining bow		1	
		Relay carrier 2			
		Footwell			
12	8R0 937 545 A	Relay carrier		2	
		Connection point			
		Seat			
13	8K0 971 845 A	Relay carrier		1	
		Luggage compartment			
		Right			
15	999 607 082 00	Fuse		X	
		5 A			
(15)	999 607 083 00	Fuse		X	
		7,5 A			
(15)	999 607 084 00	Fuse		X	
		10 A			
(15)	999 607 085 00	Fuse		X	
		15 A			
(15)	999 607 086 00	Fuse		X	
		20 A			
(15)	999 607 088 00	Fuse		X	

Model: 95B **Model life 2014>>**

Pos	Part Number	Description	Remark	Qty	Model
		30 A			
16	999 607 011 00	Fuse		X	
		40 A			
(16)	999 607 012 00	Fuse		X	
		50 A			
(16)	999 607 013 00	Fuse		X	
		60 A			
17	958 615 029 00	Relay		1	
(17)	958 615 010 00	Relay		1	
18	8J0 971 981	Cap		2	
19	N 102 615 01	Fuse		X	
		Mini			
		5A			
(19)	N 102 615 03	Fuse		X	
		Mini			
		10A			
(19)	N 102 615 07	Fuse		X	
		Mini			
		15A			

Illustration: 902-05

PORSCHE

Model: 95B **Model life 2014>>**

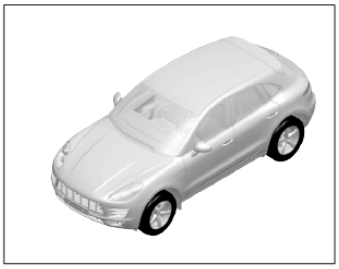

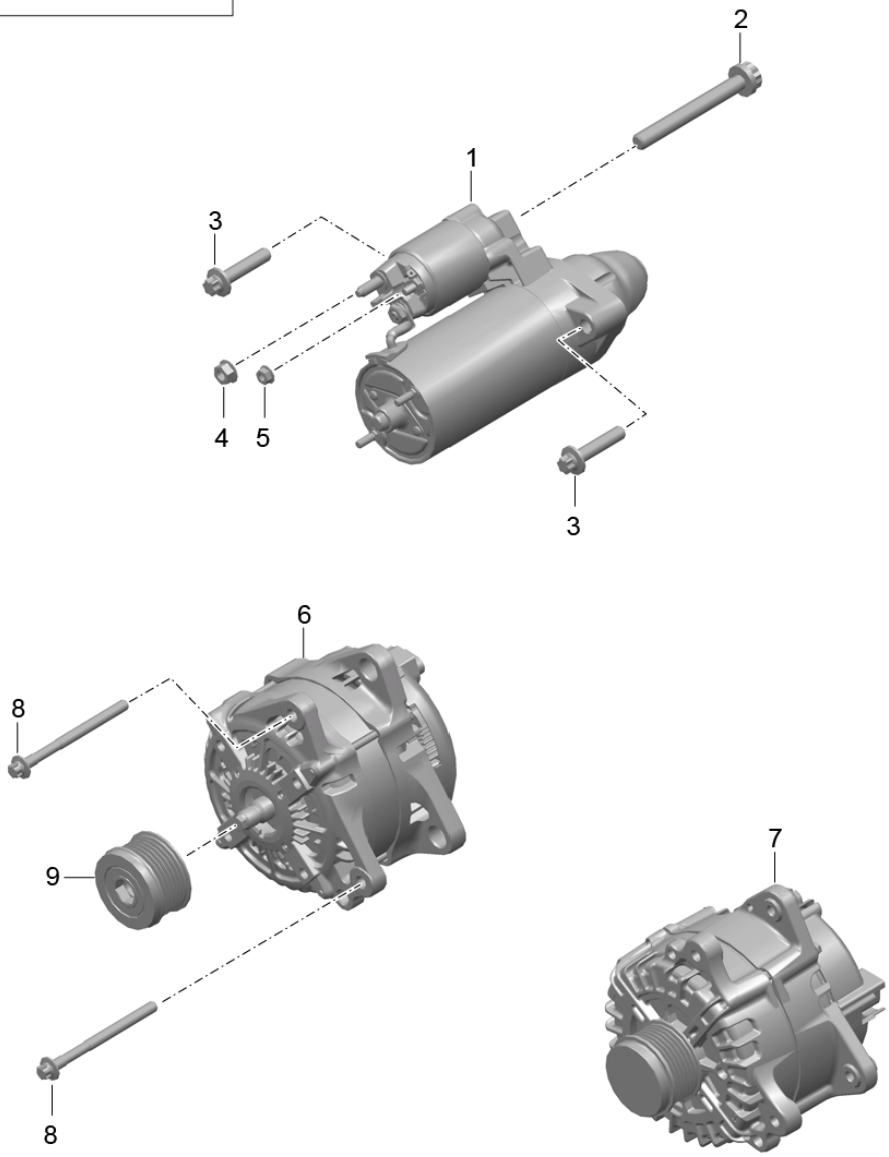

Model: 95B **Model life 2014>>**

Pos	Part Number	Description	Remark	Qty	Model
		Starter Generator Ground strap			
1	948 604 214 01	Starter		1	MCT.LA/MA MDC.NA
1	948 604 214 AX	Starter		1	MCT.LA/MA MDC.NA
(1)	059 911 022	Starter		1	MCD.UD MCP.NB MCT.BA/BB/BC I7L7
		without Start/Stop			
(1)	059 911 022 X	Starter		1	MCD.UD MCP.NB MCT.BA/BB/BC I7L7
		without Start/Stop			
(1)	059 911 021 K	Starter		1	MCD.UD MCP.NB MCT.BA/BB/BC I7L8
		with Start/Stop			
(1)	059 911 021 X	Starter		1	MCD.UD MCP.NB MCT.BA/BB/BC I7L8
		with Start/Stop			
(1)	06H 911 021 E	Starter		1	MCN.CC I7L7
		without Start/Stop			
(1)	06H 911 021 AX	Starter		1	MCN.CC I7L7
		without Start/Stop			
(1)	06H 911 021 D	Starter		1	MCN.CC I7L4/7L8
		with Start/Stop			
(1)	06H 911 021 X	Starter		1	MCN.CC I7L4/7L8
		with Start/Stop			
3	900 385 011 01	Torx screw		2	MCT.LA/MA MDC.NA
		BM 10 X 45			
(3)	N 103 145 06	Hexagon-head bolt		1	MCD.UD MCP.NB MCT.BA/BB/BC
		AM10X50			
4	900 377 003 01	Hexagon nut		2	
		M 8			
5	900 377 010 02	Hexagon nut		1	
		M 6			
6	06H 903 017 K	Generator		1	MCN.CC
(6)	06H 903 017 X	Generator		1	MCN.CC
6	7PP 903 016 A	Generator		1	MCT.LA/MA MDC.NA

Model: 95B **Model life 2014>>**

Pos	Part Number	Description	Remark	Qty	Model
(6)	7PP 903 016 AX	Generator		1	MCT.LA/MA MDC.NA
7	059 903 018 Q	Generator		1	MCD.UD MCP.NB MCT.BA/BB/BC
7	059 903 018 X	Generator		1	MCD.UD MCP.NB MCT.BA/BB/BC
7	059 903 019 L	Generator		1	MCD.UD MCP.NB MCT.BA/BB/BC
7	059 903 019 X	Generator		1	MCD.UD MCP.NB MCT.BA/BB/BC
8	N 107 655 01	Hexagon socket head bolt M 8 X 85		4	MCN.CC
8	900 385 007 01	Torx screw BM 8 X 100		2	MCT.LA/MA MDC.NA
(8)	N 106 100 01	Hexagon-head bolt M 8 X 90		2	MCD.UD MCP.NB MCT.BA/BB/BC
9	946 603 955 00	Pulley Generator		1	

Illustration: 902-06

PORSCHE

Model: 95B **Model life 2014>>**

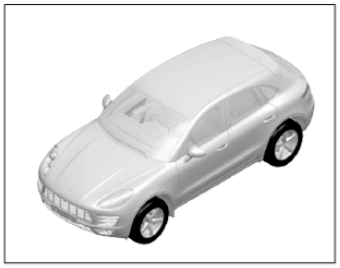

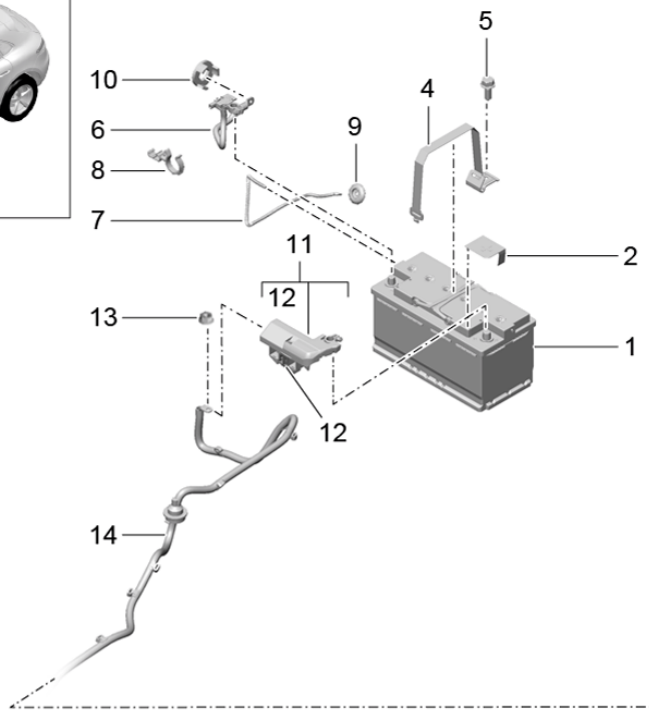

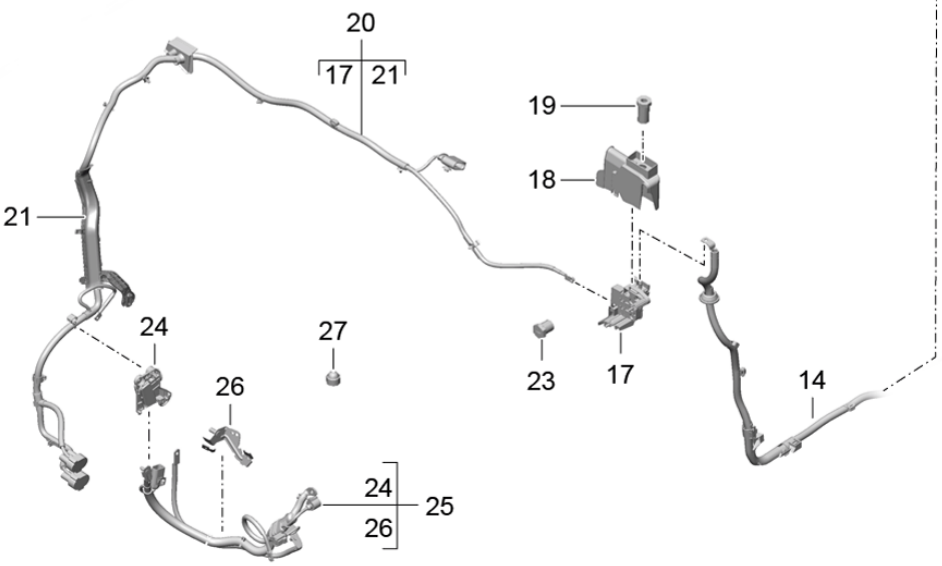

Model: 95B **Model life 2014>>**

Pos	Part Number	Description	Remark	Qty	Model
		Battery			
		Power distributor			
(1)	958 611 075 20	Battery	16-	1	IIY2/J1N
		75AH			
(1)	958 611 092 21	Battery		1	IJ0B
		92AH			
(1)	5GM 915 105 AC	Battery	(BR)	1	IJ0B
		92AH			
(1)	958 611 105 21	Battery		1	IJ0P
		105 AH			
(1)	5GM 915 105 AD	Battery	(BR)	1	IJ0P
		105 AH			
2	8K0 915 429 C	Pole covering		1	
		Positive cable			
4	8R0 867 749 A	Retaining strap		1	
		Battery			
5	N 107 371 01	Hexagon-head bolt		1	
		M8 X 22			
6	8R0 915 181 C	Ground strap		1	
		Battery			
		Body			
		with			
		Sensor			
7	8R0 915 531	Breather pipe		1	
8	N 107 758 01	Fixing clip		1	
9	4H0 915 143	Grommet		1	
10	6Q0 971 260	Torsion protection		1	
11	8J0 915 459	Power distributor		1	
		Battery			
		Lock			
12	955 611 205 00	Switch unit		1	
		Battery main switch			
-	N 104 249 05	Lock		1	
		110A			
13	N 902 955 02	Hexagon nut		1	
		M8			
14	95B 971 225 C	Wiring harness		1	
		Battery			
		Until			
		Jump-start terminal			
17	95B 937 517 B	Jump-start terminal		1	
		Wiring harness			
		Engine compartment			
18	95B 937 115 A	Cover		1	
		Jump-start terminal			
		Engine compartment			
19	955 611 206 00	Hexagon nut		1	
		Terminal clamp			
		Emergency starting			
20	95B 971 226 E	Wiring harness		1	MCN.CC
		Jump-start terminal			
		To			
		Distributor			
20	95B 971 226 F	Wiring harness		1	MCT.LA/MA
					MDC.NA
		Jump-start terminal			
		To			
		Fan			
(20)	95B 971 226 D	Connecting line		1	MCD.UD
					MCP.NB
					MCT.BA/BB/BC

Model: 95B **Model life 2014>>**

Pos	Part Number	Description	Remark	Qty	Model
		Connection point To Distributor			
21	95B 971 925	Cable guide Wiring harness Jump-start terminal		1	
23	4F0 972 501	Contact pin Jump-start terminal		1	
24	95B 937 517 A	Distributor		1	MCD.UD MCP.NB MCT.BA/BB/BC
		Engine compartment			
25	95B 971 228 M	Wiring harness Generator Starter		1	MCN.CC
(25)	95B 971 228 L	Wiring harness Generator Starter		1	MCD.UD MCP.NB MCT.BA/BB/BC I7L4/7L8
(25)	95B 971 228 N	Wiring harness Generator Starter		1	MCD.UD MCP.NB MCT.BA/BB/BC I7L7
(25)	946 607 067 00	Wiring harness Generator Starter		1	MCT.LA/MA MDC.NA
26	8K0 971 502 AB	Support Wiring harness		1	MCD.UD MCP.NB MCT.BA/BB/BC
27	N 904 030 02	Protection cap M8		1	

Illustration: 902-08

PORSCHE

Model: 95B **Model life 2014>>**

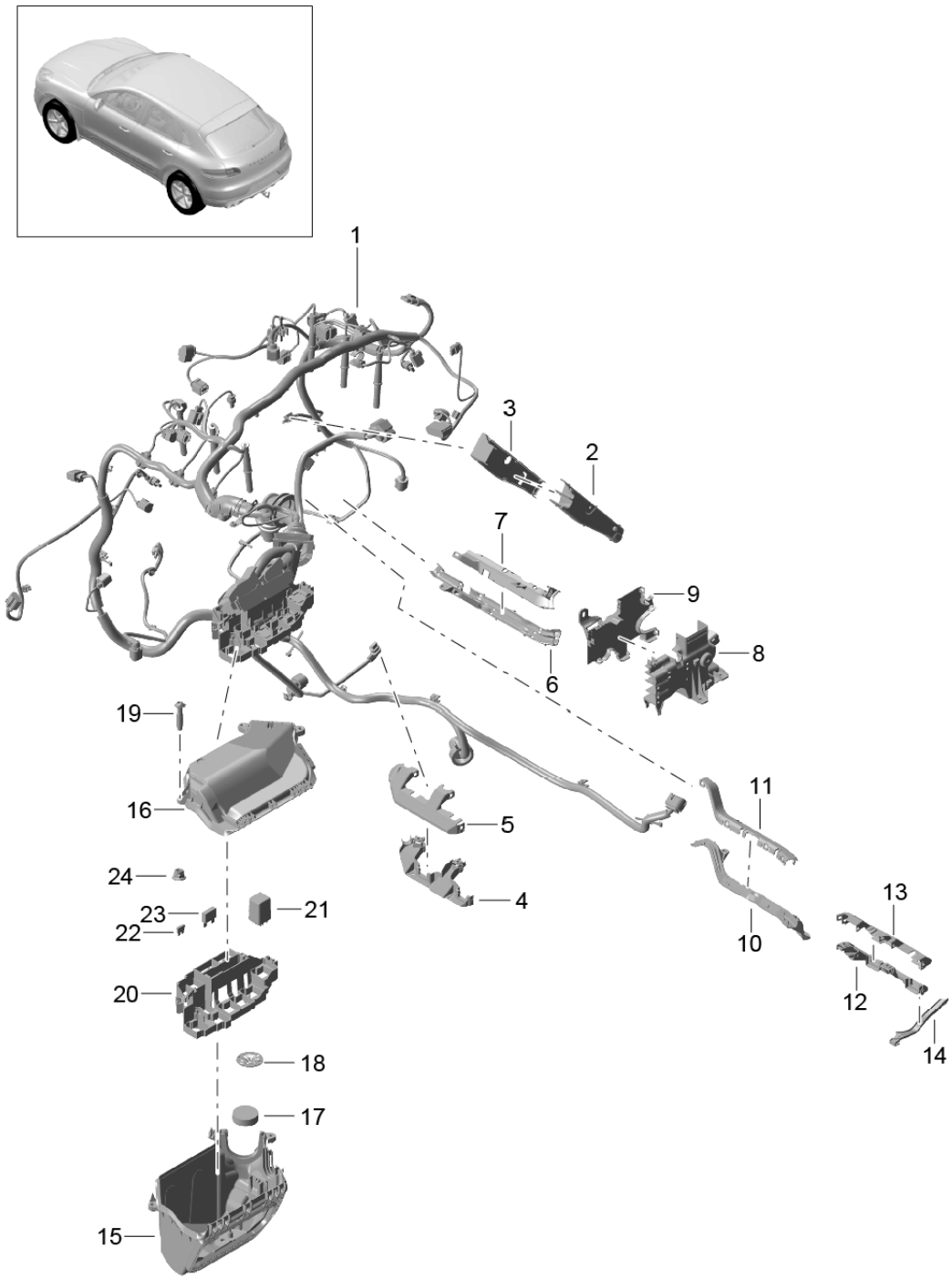

Model: 95B **Model life 2014>>**

Pos	Part Number	Description	Remark	Qty	Model
		Wiring harness Engine Connector housing see WWW.TKR-CONNECTOR.COM			
1	946 607 003 01	Wiring harness Engine	-16	1	MCT.LA/MA MDC.NA IL0L
1	946 607 003 02	Wiring harness Engine	17-	1	MCT.LA/MA MDC.NA IL0L
1	946 607 003 51	Wiring harness Engine	-16	1	MCT.LA/MA MDC.NA IL0R
1	946 607 003 52	Wiring harness Engine	17-	1	MCT.LA/MA MDC.NA IL0R
1	95B 971 072 AT	Wiring harness Engine		1	MCT.BA/BB/BC IL0L/7MM
1	95B 971 072 BM	Wiring harness Engine	/LL	1	MCP.NB MCT.BA IL0L/7GB
1	95B 971 072 BA	Wiring harness Engine		1	MCT.BA/BB/BC IL0R/7MM
1	95B 971 072 BB	Wiring harness Engine	/LL	1	MCD.UD IL0L/0GG
1	95B 971 072 BC	Wiring harness Engine	/RL	1	MCD.UD IL0R/0GG
1	95B 971 072 D	Wiring harness Engine	/LL	1	MCN.CC IL0L/7GH/7MM
1	95B 971 072 E	Wiring harness Engine	/LL	1	MCN.CC IL0L/7GB
1	95B 971 072 J	Wiring harness Engine	/RL	1	MCN.CC IL0R/7GH/7MM
2	948 607 251 00	Cable guide Control box cover		1	MCT.LA/MA MDC.NA
3	948 607 161 00	Control box cover Cable guide Control box cover		1	MCT.LA/MA MDC.NA
4	946 607 132 00	Cable guide Cyl. 1 - 3 Outer		1	MCT.LA/MA MDC.NA
5	946 607 142 00	Lid Cable guide Cyl. 1 - 3		1	MCT.LA/MA MDC.NA

Model: 95B **Model life 2014>>**

Pos	Part Number	Description	Remark	Qty	Model
		Outer			
6	946 607 153 00	Cable guide		1	MCT.LA/MA MDC.NA
		Cyl. 1 - 3 Centre			
7	946 607 163 00	Lid		1	MCT.LA/MA MDC.NA
		Cable guide Cyl. 1 - 3 Centre			
8	946 607 151 00	Cable guide		1	MCT.LA/MA MDC.NA
		Connection			
9	946 607 161 00	Lid		1	MCT.LA/MA MDC.NA
		Cable guide Connection			
10	946 607 156 00	Cable guide		1	MCT.LA/MA MDC.NA
		Cyl. 4 - 6 Centre			
11	946 607 166 00	Lid		1	MCT.LA/MA MDC.NA
		Cable guide Cyl. 4 - 6 Centre			
12	946 607 131 00	Cable guide		1	MCT.LA/MA MDC.NA
		Cyl. 4 - 6 Outer			
13	946 607 141 00	Lid		1	MCT.LA/MA MDC.NA
		Cable guide Cyl. 4 - 6 Outer			
14	946 607 110 00	Cable clip		1	MCT.LA/MA MDC.NA
		Wiring harness Engine			
15	8K1 907 355 F	Housing Floor		1	IL0L
(15)	8K2 907 355 E	Housing Floor		1	IL0R
16	8K1 907 613 C	Housing Lid		1	IL0L
(16)	8K2 907 613 B	Housing Lid		1	IL0R
17	8K0 868 951	Sound absorber Housing		1	IL0L
18	N 903 350 04	Clamping washer Sound absorber		1	IL0L
19	N 907 315 03	Oval-head screw 6X25		3	
20	8K1 937 503 B	Relay carrier Plenum panel Front		1	IL0L
(20)	8K2 937 503	Relay carrier Plenum panel Front		1	IL0R
21		Relay		X	
(21)	958 618 028 00	Control unit Glow plug		1	
		Relay socket/code:	S1/1		

Model: 95B **Model life 2014>>**

Pos	Part Number	Description	Remark	Qty	Model
(21)	958 615 029 00	Relay		1	
		Relay socket/code:	S1/1		
(21)	4H0 951 253 C	Relay		1	
		Starter			
		Relay socket/code:	S1/2A		
(21)		Relay		1	
		Starter			
		Relay socket/code:	S1/2B		
(21)	958 615 008 01	Relay		1	
		VAKUUMPUMPE			
		Relay socket/code:	S1/4		
22	999 607 082 00	Fuse		X	
		5 A			
(22)	999 607 083 00	Fuse		X	
		7,5 A			
(22)	999 607 084 00	Fuse		X	
		10 A			
(22)	999 607 085 00	Fuse		X	
		15 A			
(22)		Fuse		X	
		15 A			
(22)	999 607 086 00	Fuse		X	
		20 A			
(22)	999 607 088 00	Fuse		X	
		30 A			
23	999 607 011 00	Fuse		X	
		40 A			
24	N 102 058 02	Hexagon nut		1	
		M 6			
25	8K0 971 824 B	Cable guide		1	
		Spring strut			MCD.UD
					MCP.NB
					MCT.BA/BB/BC

Illustration: 902-10

PORSCHE

Model: 95B **Model life 2014>>**

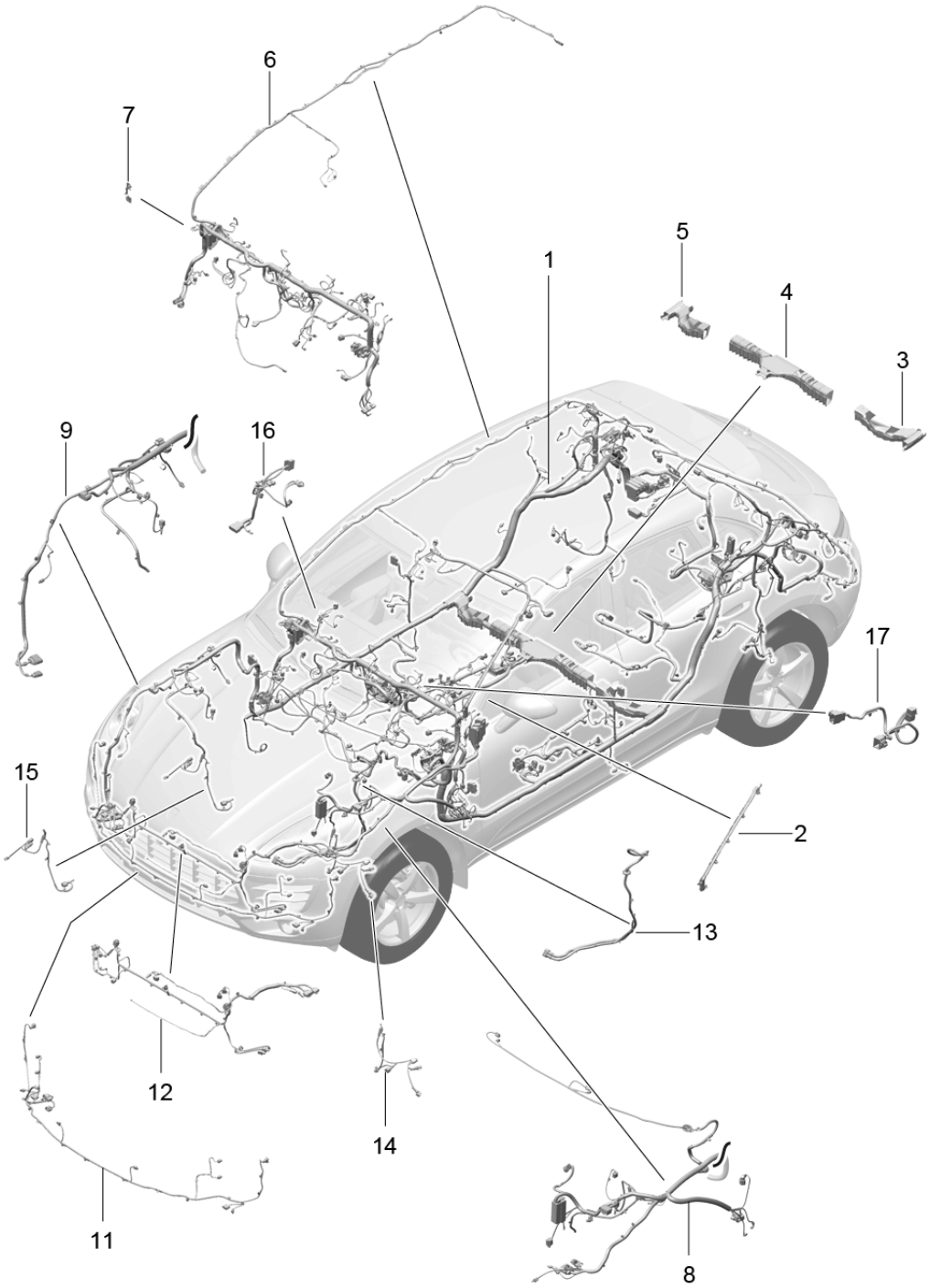

Model: 95B **Model life 2014>>**

Pos	Part Number	Description	Remark	Qty	Model
		Wiring harnesses Passenger compartment Bumper FRONT luggage compartment Anti-lock brake system Brake pad wear indicator Front axle Connector housing see WWW.TKR-CONNECTOR.COM			
1	95B 612 901 00	Wiring harness Passenger compartment Vehicle Ident. No. Indicate		1	
2	95B 971 341	Cable guide A-pillar Left		1	
3	8R0 971 821	Cable guide Heel plate Left		1	
4	8R0 971 824	Cable guide Heel plate Centre		1	
5	8R0 971 822	Cable guide Heel plate Right		1	
6	95B 612 901 01	Wiring harness Dashboard Vehicle Ident. No. Indicate It is necessary to rework		1	
7	95B 971 865 C	Cable guide Wiring harness Dashboard		1	IL0L
7	95B 971 865 D	Cable guide Wiring harness Dashboard		1	IL0R
8	95B 612 901 02	Wiring harness Sub-part Front Left Vehicle Ident. No. Indicate It is necessary to rework	/LL	1	IL0L
8	95B 612 901 04	Wiring harness Sub-part Front Left Vehicle Ident. No. Indicate It is necessary to rework	/RL	1	IL0R
9	95B 612 901 03	Wiring harness Sub-part Front Right Vehicle Ident. No. Indicate It is necessary to rework	/LL	1	IL0L
9	95B 612 901 05	Wiring harness Sub-part Front Right Vehicle Ident. No.	/RL	1	IL0R

Model: 95B **Model life 2014>>**

Pos	Part Number	Description	Remark	Qty	Model
		Indicate It is necessary to rework			
11	95B 971 095 AF	Wiring harness Bumper Front		1	I8F2
(11)	95B 971 095 AJ	Wiring harness Bumper Front		1	I8F5
(11)	95B 971 095 A	Wiring harness Bumper Front		1	I8F2
12	95B 971 073 N	Wiring harness FRONT luggage compartment It is necessary to rework		1	
13	95B 971 111	Wiring harness Steering		1	IL0L
(13)	95B 971 111 B	Wiring harness Steering		1	IL0L
(13)	95B 971 111 A	Wiring harness Steering		1	IL0R
(13)	95B 971 111 C	Wiring harness Steering		1	IL0R
14	95B 972 251	Wiring harness Anti-lock brake system Brake pad wear indicator Left	/L	1	I1BA/8Q2
(14)	95B 972 251 A	Wiring harness Anti-lock brake system Brake pad wear indicator Left	/L	1	I1BH/1BK/8Q2
(14)	95B 972 251 B	Wiring harness Anti-lock brake system Brake pad wear indicator Left	/L	1	I8Q3
15	95B 972 252	Wiring harness Anti-lock brake system Brake pad wear indicator Right	/R	1	IL0L/1BA
(15)	95B 972 252 A	Wiring harness Anti-lock brake system Brake pad wear indicator Right	/R	1	IL0L/1BH/1BK
(15)	95B 972 252 B	Wiring harness Anti-lock brake system Brake pad wear indicator Right	/R	1	IL0R/1BH/1BK
(15)	95B 972 252 C	Wiring harness Anti-lock brake system Brake pad wear indicator Right	/R	1	IL0R/1BH/1BK
(15)		Wiring harness Anti-lock brake system Brake pad wear indicator Right	/R	1	IL0R/1BH/1BK
16	95B 971 679 A	Wiring harness Glove compartment		1	I9MA
(16)	95B 971 679 C	Wiring harness Glove compartment		1	I9MB
17	95B 971 411	Wiring harness Adapter Air conditioner		1	
-	N 106 478 01	Tie-wrap		1	
-	8E0 971 818 A	Tie-wrap		3	

Model: 95B **Model life 2014>>**

Pos	Part Number	Description	Remark	Qty	Model
		207,00 X 5,00			

Illustration: 902-15

PORSCHE

Model: 95B **Model life 2014>>**

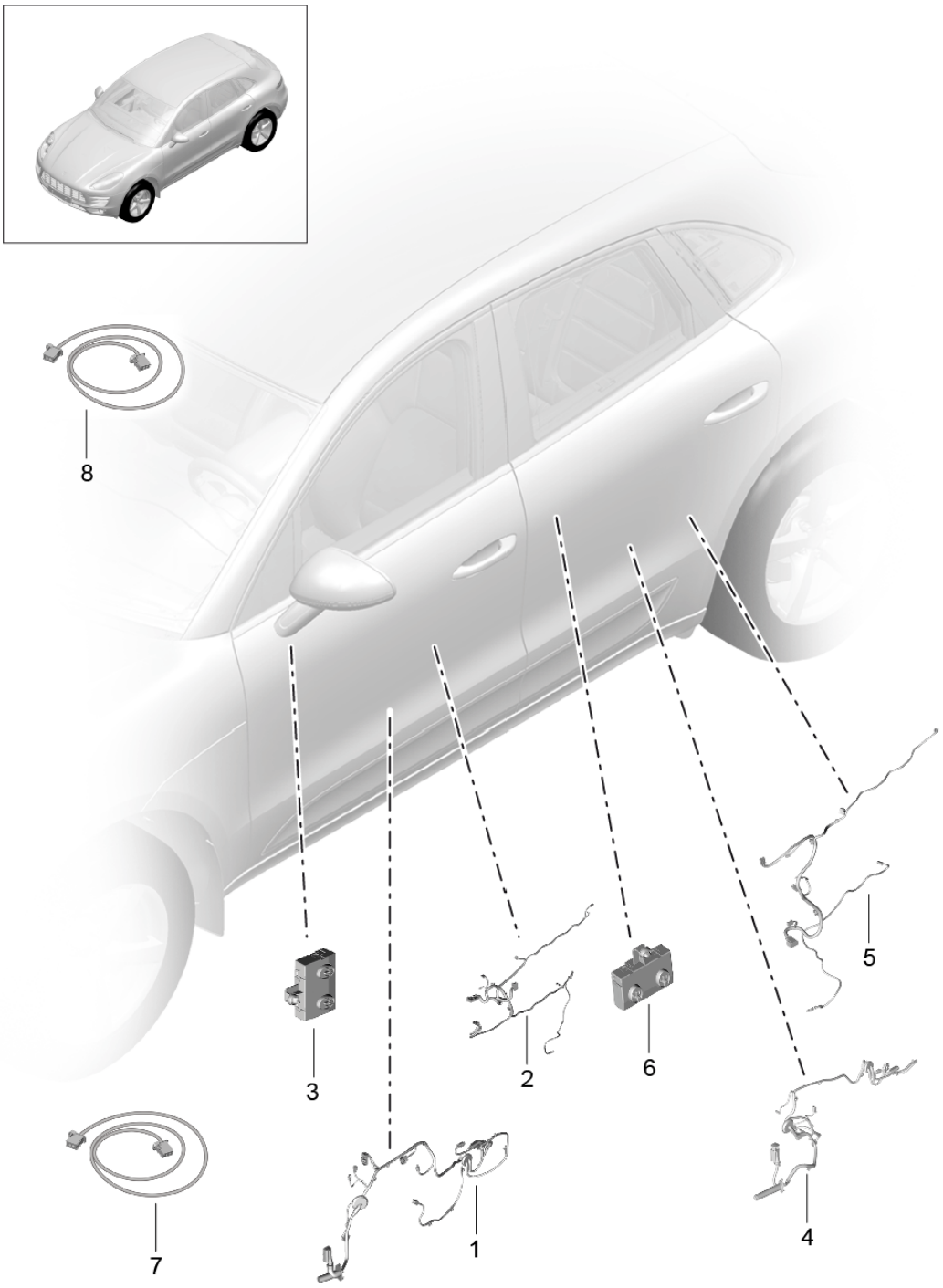

Model: 95B **Model life 2014>>**

Pos	Part Number	Description	Remark	Qty	Model
		Wiring harnesses Control units Doors Connector housing see WWW.TKR-CONNECTOR.COM			
(1)	95B 971 029 BJ	Wiring harness Assembly frame Driver's door		1	I4F2/4F6/7X0 I7X2/7X8/7X9 I7Y0/7Y2/7Y6 I9VJ
(1)	95B 971 029 BM	Wiring harness Assembly frame Driver's door		1	I4F2/4F6/7X0 I7X2/7X8/7X9 I7Y1/7Y3/7Y7 I9VJ
(1)	95B 971 029 AQ	Wiring harness Assembly frame Driver's door		1	I4K0/4K3/7X0 I7X2/7X8/7X9 I7Y0/7Y2/7Y6 I9VJ
(1)	95B 971 029 AT	Wiring harness Assembly frame Driver's door		1	I4K0/4K3/7X0 I7X2/7X8/7X9 I7Y1/7Y3/7Y7 I9VJ
(1)	95B 971 029 BK	Wiring harness Assembly frame Driver's door		1	I4F2/4F6/7X0 I7X2/7X8/7X9 I7Y0/7Y2/7Y6 I9VK
(1)	95B 971 029 BN	Wiring harness Assembly frame Driver's door		1	I4F2/4F6/7X0 I7X2/7X8/7X9 I7Y1/7Y3/7Y7 I9VK
(1)	95B 971 029 AR	Wiring harness Assembly frame Driver's door		1	I4K0/4K3/7X0 I7X2/7X8/7X9 I7Y0/7Y2/7Y7 I9VK I7Y6
(1)	95B 971 029 BA	Wiring harness Assembly frame Driver's door		1	I4K0/4K3/7X0 I7X2/7X8/7X9 I7Y1/7Y3/7Y7 I9VK
(1)	95B 971 029 BL	Wiring harness Assembly frame Driver's door		1	I4F2/4F6/7X0 I7X2/7X8/7X9 I7Y0/7Y2/7Y6 I9VL
(1)	95B 971 029 BP	Wiring harness		1	I4F2/4F6/7X0 I7X2/7X8/7X9 I7Y1/7Y3/7Y7

Model: 95B **Model life 2014>>**

Pos	Part Number	Description	Remark	Qty	Model
					I9VL
		Assembly frame Driver's door			
(1)	95B 971 029 AS	Wiring harness		1	I4K0/4K3/7X0 I7X2/7X8/7X9 I7Y0/7Y2/7Y6 I9VL
		Assembly frame Driver's door			
(1)	95B 971 029 BB	Wiring harness		1	I4K0/4K3/7X0 I7X2/7X8/7X9 I7Y1/7Y3/7Y7 I9VL
		Assembly frame Driver's door			
(1)	95B 971 030 CB	Wiring harness	/LL	1	IL0L/4F2/4F6 I5RQ/5RR/5RT I5RV/7X0/7X2 I7X9/9VJ I7Y0/7Y2/7Y6
		Assembly frame Passenger's door			
(1)		Wiring harness	/RL	1	IL0R/4F2/4F6 I5RV/5SG/5SJ I5SL/7X0/7X2 I7X9/9VJ I7Y0/7Y2/7Y6
		Assembly frame Passenger's door			
(1)	95B 971 030 CE	Wiring harness	/LL	1	IL0L/4F2/4F6 I5RQ/5RR/5RT I5RV/7X0/7X2 I7X9/9VJ I7Y1/7Y3/7Y7
		Assembly frame Passenger's door			
(1)		Wiring harness	/RL	1	IL0R/4F2/4F6 I5RV/5SG/5SJ I5SL/7X0/7X2 I7X9/9VJ I7Y1/7Y3/7Y7
		Assembly frame Passenger's door			
(1)	95B 971 030 AT	Wiring harness	/LL	1	IL0L/4K0/4K3 I5RQ/5RR/5RT I5RV/7X0/7X2 I7X8/9VJ I7Y0/7Y2/7Y6
		Assembly frame Passenger's door			
(1)		Wiring harness	/RL	1	IL0R/4K0/4K3 I5RV/5SG/5SJ I5SL/7X0/7X2 I7X8/9VJ I7Y0/7Y2/7Y6
		Assembly frame Passenger's door			
(1)	95B 971 030 BD	Wiring harness	/LL	1	IL0L/4K0/4K3 I5RQ/5RR/5RT I5RV/7X0/7X2 I7X9/9VJ I7Y1/7Y3/7Y7
		Assembly frame Passenger's door			
(1)		Wiring harness	/RL	1	IL0R/4K0/4K3 I5RV/5SG/5SJ I5SL/7X0/7X2 I7X9/9VJ I7Y1/7Y3/7Y7
		Assembly frame Passenger's door			

Model: 95B **Model life 2014>>**

Pos	Part Number	Description	Remark	Qty	Model
(1)	95B 971 030 CC	Wiring harness	/LL	1	IL0L/4F2/4F6 I5RQ/5RR/5RT I5RV/7X0/7X2 I7X8/9VK
		Assembly frame			I7Y0/7Y2/7Y7
		Passenger's door			
(1)		Wiring harness	/RL	1	IL0R/4F2/4F6 I5RV/5SG/5SJ I5SL/7X0/7X2 I7X8/9VK
		Assembly frame			I7Y0/7Y2/7Y6
		Passenger's door			
(1)	95B 971 030 CF	Wiring harness	/LL	1	IL0L/4F2/4F6 I5RQ/5RR/5RT I5RV/7X0/7X2 I7X8/9VK
		Assembly frame			I7Y1/7Y3/7Y7
		Passenger's door			
(1)		Wiring harness	/RL	1	IL0R/4F2/4F6 I5RV/5SG/5SJ I5SL/7X0/7X2 I7X8/9VK
		Assembly frame			I7Y1/7Y3/7Y7
		Passenger's door			
(1)	95B 971 030 BA	Wiring harness	/LL	1	IL0L/4K0/4K3 I5RQ/5RR/5RT I5RV/7X0/7X2 I7X8/9VK
		Assembly frame			I7Y0/7Y2/7Y6
		Passenger's door			
(1)		Wiring harness	/RL	1	IL0R/4K0/4K3 I5RV/5SG/5SJ I5SL/7X0/7X2 I7X8/9VK
		Assembly frame			I7X9/7Y0/7Y2 I7Y6
		Passenger's door			
(1)	95B 971 030 BE	Wiring harness	/LL	1	IL0L/4K0/4K3 I5RQ/5RR/5RT I5RV/7X0/7X2 I7X8/9VK
		Assembly frame			I7Y1/7Y3/7Y7
		Passenger's door			
(1)		Wiring harness	/RL	1	IL0R/4K0/4K3 I5RV/5SG/5SJ I5SL/7X0/7X2 I7X8/9VK
		Assembly frame			I7Y1/7Y3/7Y7
		Passenger's door			
(1)	95B 971 030 BS	Wiring harness	/LL	1	IL0L/4F2/4F6 I5RP/7X0/7X2 I7X8/7X9/7Y0 I7Y2/9VK
		Assembly frame			I7Y6
		Passenger's door			
(1)		Wiring harness	/RL	1	IL0R/4F2/4F6 I5SU/7X0/7X2 I7X8/7X9/7Y0 I7Y2/9VK
		Assembly frame			I7Y6
		Passenger's door			
(1)	95B 971 030 CA	Wiring harness	/LL	1	IL0L/4F2/4F6 I5RP/7X0/7X2

Model: 95B **Model life 2014>>**

Pos	Part Number	Description	Remark	Qty	Model
					I7X8/7X9/7Y1
					I7Y3/9VK
		Assembly frame			I7Y7
		Passenger's door			
(1)		Wiring harness	/RL	1	IL0R/4F2/4F6
					I5SU/7X0/7X2
					I7X8/7X9/7Y1
					I7Y3/9VK
		Assembly frame			I7Y7
		Passenger's door			
(1)	95B 971 030 BN	Wiring harness	/LL	1	IL0L/4K0/4K3
					I5RP/7X0/7X2
					I7X8/7X9/7Y0
					I7Y2/9VK
		Assembly frame			I7Y7
		Passenger's door			
(1)		Wiring harness	/RL	1	IL0R/4K0/4K3
					I5SU/7X0/7X2
					I7X8/7X9/7Y0
					I7Y2/9VK
		Assembly frame			I7Y6
		Passenger's door			
(1)	95B 971 030 BQ	Wiring harness	/LL	1	IL0L/4K0/4K3
					I5RP/7X0/7X2
					I7X8/7X9/7Y1
					I7Y3/9VK
		Assembly frame			I7Y7
		Passenger's door			
(1)		Wiring harness	/RL	1	IL0R/4K0/4K3
					I5SU/7X0/7X2
					I7X8/7X9/7Y1
					I7Y3/9VK
		Assembly frame			I7Y7
		Passenger's door			
(1)	95B 971 030 CD	Wiring harness	/LL	1	IL0L/4F2/4F6
					I5RQ/5RR/5RT
					I5RV/7X0/7X2
					I7X8/9VL
		Assembly frame			I7Y0/7Y2/7Y6
		Passenger's door			
(1)		Wiring harness	/RL	1	IL0R/4F2/4F6
					I5RV/5SG/5SJ
					I5SL/7X0/7X2
					I7X8/9VL
		Assembly frame			I7Y0/7Y2/7Y6
		Passenger's door			
(1)	95B 971 030 CG	Wiring harness	/LL	1	IL0L/4F2/4F6
					I5RQ/5RR/5RT
					I5RV/7X0/7X2
					I7X8/9VL
		Assembly frame			I7Y1/7Y3/7Y7
		Passenger's door			
(1)		Wiring harness	/RL	1	IL0R/4F2/4F6
					I5RV/5SG/5SJ
					I5SL/7X0/7X2
					I7X8/9VL
		Assembly frame			I7Y1/7Y3/7Y7
		Passenger's door			
(1)	95B 971 030 BC	Wiring harness	/LL	1	IL0L/4F2/4F6
					I5RQ/5RR/5RT
					I5RV/7X0/7X2
					I7X8/9VL
		Assembly frame			I7Y1/7Y3/7Y7

Model: 95B **Model life 2014>>**

Pos	Part Number	Description	Remark	Qty	Model
		Passenger's door			
(1)		Wiring harness	/RL	1	IL0R/4K0/4K3 I5SG/5SJ/5SL I7X0/7X2/7X8 I7X9/9VL
		Assembly frame			I7Y0/7Y2
		Passenger's door			
(1)	95B 971 030 BF	Wiring harness	/LL	1	IL0L/4K0/4K3 I5RQ/5RR/5RT I5RV/7X0/7X2 I7X8/9VL
		Assembly frame			I7Y1/7Y3/7Y7
		Passenger's door			
(1)		Wiring harness	/RL	1	IL0R/4K0/4K3 I5RV/5SG/5SJ I5SL/7X0/7X2 I7X8/9VL
		Assembly frame			I7Y1/7Y3/7Y7
		Passenger's door			
(1)	95B 971 030 BB	Wiring harness	/LL	1	IL0L/4F2/4F6 I5RP/7X0/7X2 I7X8/7X9/7Y1 I7Y3/9VL
		Assembly frame			I7Y7
		Passenger's door			
(1)		Wiring harness	/RL	1	IL0R/4F2/4F6 I5SU/7X0/7X2 I7X8/7X9/7Y1 I7Y3/9VL
		Assembly frame			I7Y7
		Passenger's door			
(1)	95B 971 030 BT	Wiring harness	/LL	1	IL0L/4F2/4F6 I5RP/7X0/7X2 I7X8/7X9/7Y0 I7Y2/9VL
		Assembly frame			I7Y6
		Passenger's door			
(1)		Wiring harness	/RL	1	IL0R/4F2/4F6 I5SU/7X0/7X2 I7X8/7X9/7Y0 I7Y2/9VL
		Assembly frame			I7Y6
		Passenger's door			
(1)	95B 971 030 BP	Wiring harness	/LL	1	IL0L/4K0/4K3 I5RP/7X0/7X2 I7X8/7X9/7Y0 I7Y2/9VL
		Assembly frame			I7Y6
		Passenger's door			
(1)		Wiring harness	/RL	1	IL0R/4K0/4K3 I5SU/7X0/7X2 I7X8/7X9/7Y0 I7Y2/9VL
		Assembly frame			I7Y6
		Passenger's door			
(1)	95B 971 030 BR	Wiring harness	/LL	1	IL0L/4K0/4K3 I5RP/7X0/7X2 I7X8/7X9/7Y1 I7Y3/9VL
		Assembly frame			I7Y7
		Passenger's door			
(1)		Wiring harness	/RL	1	IL0R/4K0/4K3 I5SU/7X0/7X2

Model: 95B **Model life 2014>>**

Pos	Part Number	Description	Remark	Qty	Model
					I7X8/7X9/7Y1
					I7Y3/9VL
		Assembly frame			I7Y7
		Passenger's door			
(2)	95B 971 035 P	Wiring harness		1	I7Y0/7Y2/7Y6
					I9MA/9VJ
		Door panel			
		Driver's door			
(2)	95B 971 035 AP	Wiring harness		1	I7Y0/7Y2/7Y6
					I9MB/9VJ
		Door panel			
		Driver's door			
(2)	95B 971 035 AB	Wiring harness		1	I7Y1/7Y3/7Y7
					I9MA/9VJ
		Door panel			
		Driver's door			
(2)	95B 971 035 AS	Wiring harness		1	I7Y1/7Y3/7Y7
					I9MB/9VJ
		Door panel			
		Driver's door			
(2)	95B 971 035 M	Wiring harness		1	I7Y0/7Y2/7Y6
					I9MA/9VK
		Door panel			
		Driver's door			
(2)	95B 971 035 AM	Wiring harness		1	I7Y0/7Y2/7Y6
					I9MB/9VK
		Door panel			
		Driver's door			
(2)	95B 971 035 T	Wiring harness		1	I7Y1/7Y3/7Y7
					I9MA/9VK
		Door panel			
		Driver's door			
(2)	95B 971 035 AQ	Wiring harness		1	I7Y1/7Y3/7Y7
					I9MB/9VK
		Door panel			
		Driver's door			
(2)	95B 971 035 N	Wiring harness		1	I7Y0/7Y2/7Y6
					I9MA/9VL
		Door panel			
		Driver's door			
(2)	95B 971 035 AN	Wiring harness		1	I7Y0/7Y2/7Y6
					I9MB/9VL
		Door panel			
		Driver's door			
(2)	95B 971 035 AA	Wiring harness		1	I7Y1/7Y3/7Y7
					I9MA/9VL
		Door panel			
		Driver's door			
(2)	95B 971 035 AR	Wiring harness		1	I7Y1/7Y3/7Y7
					I9MB/9VL
		Door panel			
		Driver's door			
(2)	95B 971 036 H	Wiring harness		1	I3PN/9MA/9VJ
		Door panel			
		Passenger's door			
(2)	95B 971 036 S	Wiring harness		1	I3PN/9MB/9VJ
		Door panel			
		Passenger's door			
(2)	95B 971 036 F	Wiring harness		1	I3PN/9MA/9VK
		Door panel			
		Passenger's door			
(2)	95B 971 036 Q	Wiring harness		1	I3PN/9MB/9VK
		Door panel			

Model: 95B **Model life 2014>>**

Pos	Part Number	Description	Remark	Qty	Model
		Passenger's door			
(2)	95B 971 036 G	Wiring harness Door panel Passenger's door		1	I3PN/9MA/9VL
(2)	95B 971 036 R	Wiring harness Door panel Passenger's door		1	I3PN/9MB/9VL
3	4H0 959 793 AC	Control unit Door Front Driver's side		1	
(3)	4H0 959 792 S	Control unit Door Front Passenger's side		1	
4	95B 971 687 K	Wiring harness Assembly frame Rear Left		1	I4K0/4K3/9VJ
(4)	95B 971 687 L	Wiring harness Assembly frame Rear Left		1	I4F2/4F6/9VJ
(4)	95B 971 687 F	Wiring harness Assembly frame Rear Left		1	I4K0/4K3/9VK
(4)	95B 971 687 G	Wiring harness Assembly frame Rear Left		1	I4F2/4F6/9VK
(4)	95B 971 687 H	Wiring harness Assembly frame Rear Left		1	I4K0/4K3/9VL
(4)	95B 971 687 J	Wiring harness Assembly frame Rear Left		1	I4F2/4F6/9VL
(4)	95B 971 688 K	Wiring harness Assembly frame Rear Right		1	I4K0/4K3/9VJ
(4)	95B 971 688 L	Wiring harness Assembly frame Rear Right		1	I4F2/4F6/9VJ
(4)	95B 971 688 F	Wiring harness Door panel Rear Right		1	I4K0/4K3/9VK
(4)	95B 971 688 G	Wiring harness Assembly frame Rear Right		1	I4F2/4F6/9VK
(4)	95B 971 688 H	Wiring harness Assembly frame Rear Right		1	I4K0/4K3/9VL
(4)	95B 971 688 J	Wiring harness Assembly frame Rear Right		1	I4F2/4F6/9VL

Model: 95B **Model life 2014>>**

Pos	Part Number	Description	Remark	Qty	Model
(5)	95B 971 693 D	Wiring harness Door panel Rear		2	I9MA/9VJ
(5)	95B 971 693 H	Wiring harness Door panel Rear		2	I9MB/9VJ
(5)	95B 971 693	Wiring harness Door panel Rear		2	I9MA/9VK
(5)	95B 971 693 F	Wiring harness Door panel Rear		2	I9MB/9VK
(5)	95B 971 693 B	Wiring harness Door panel Rear		2	I9MA/9VL
(5)	95B 971 693 G	Wiring harness Door panel Rear		2	I9MB/9VL
6	4H0 959 795 P	Control unit Door Rear		2	
7	95B 971 298 L	Wiring harness Camera Driver's side		1	I5RP/5SU
8	95B 971 298 E	Wiring harness Camera Passenger's side		1	I5RP/5SU

Illustration: 902-20

PORSCHE

Model: 95B **Model life 2014>>**

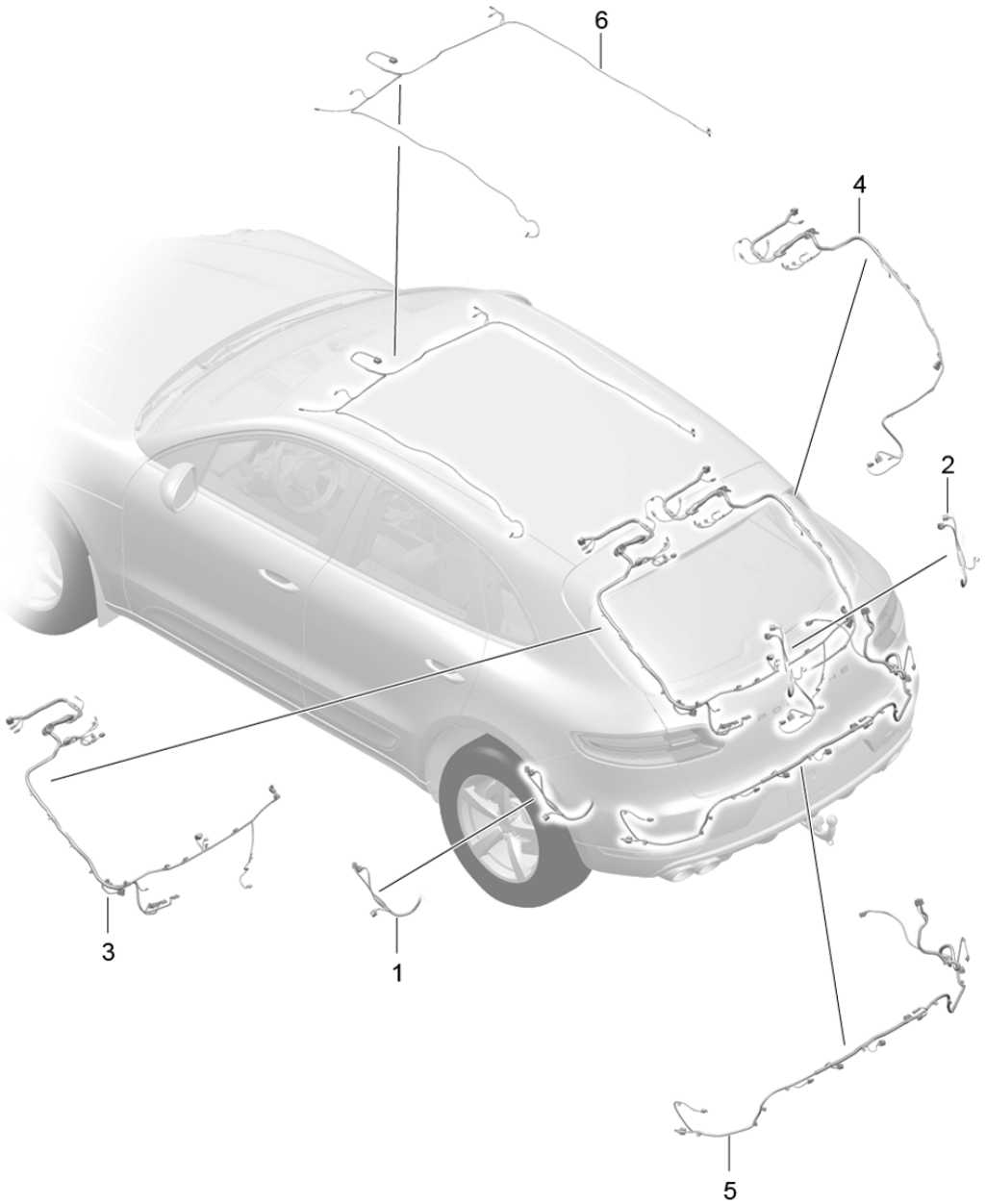

Model: 95B **Model life 2014>>**

Pos	Part Number	Description	Remark	Qty	Model
		Wiring harnesses Rear end Rooflining Rear lid Anti-lock brake system Brake pad wear indicator Rear axle Connector housing see WWW.TKR-CONNECTOR.COM			
1	95B 972 253 A	Wiring harness Anti-lock brake system Brake pad wear indicator Rear Left	-15	1	I1BA/1BH/1BK I7K0/8Q2
1	95B 972 253 M	Wiring harness Anti-lock brake system Brake pad wear indicator Rear Left	-16	1	I1BH/1BK/7K0
1	95B 972 253 B	Wiring harness Anti-lock brake system Brake pad wear indicator Rear Left	-15	1	I4K0/4K3/7K0 I8Q3
1	95B 972 253 N	Wiring harness Anti-lock brake system Brake pad wear indicator Rear Left	16-	1	I1BA/7K0/8Q3
(1)	95B 972 253 G	Wiring harness Anti-lock brake system Brake pad wear indicator Rear Left	-15	1	I1BA/1BH/1BK I7K3/7K4/8Q2
(1)	95B 972 253 AB	Wiring harness Anti-lock brake system Brake pad wear indicator Rear Left	16-	1	I1BH/1BK/7K3 I7K4
(1)	95B 972 253 H	Wiring harness Anti-lock brake system Brake pad wear indicator Rear Left	-15	1	I7K3/7K4/8Q3
(1)	95B 972 253 AC	Wiring harness Anti-lock brake system Brake pad wear indicator Rear Left	16-	1	I1BA/7K3/7K4 I8Q3
2	95B 972 254 D	Wiring harness Anti-lock brake system Brake pad wear indicator Rear Right	-15	1	I1BA
2	95B 972 254 H	Wiring harness Anti-lock brake system Brake pad wear indicator	16-	1	I1BA

Model: 95B **Model life 2014>>**

Pos	Part Number	Description	Remark	Qty	Model
		Rear Right			
(2)	95B 972 254 E	Wiring harness Anti-lock brake system Brake pad wear indicator Rear Right	-15	1	I1BH/1BK
(2)	95B 972 254 J	Wiring harness Anti-lock brake system Brake pad wear indicator Rear Right	16-	1	I1BH/1BK
3	95B 971 145 J	Wiring harness Rear lid Left	-16	1	IQV1/QV5/4E7
(3)	95B 971 145 L	Wiring harness Rear lid Left	-16	1	I4E7/7Q4
(3)	95B 971 145 Q	Wiring harness Rear lid Left	-16	1	IQU0/QV0/QV3 IQV4/QV8/4E7
(3)	95B 971 145 AA	Wiring harness Rear lid Left	17-	1	IER1/ER2/ER3 IER4/ER6/ER7 IER8 II8L/QU8/QV0 IQV3
(3)	95B 971 145 AB	Wiring harness Rear lid Left	17-	1	IER1/ER2/ER3 IER6/ER8 II8L/QU1/QV1
(3)	95B 971 145 AC	Wiring harness Rear lid Left	17-	1	IER5/I8L
4	95B 971 148 A	Wiring harness Rear lid Right	-16	1	
(4)	95B 971 148 E	Wiring harness Rear lid Right	17-	1	IER1/ER2/ER3 IER4/ER6/ER7 IER8/GY1/I8L
(4)	95B 971 148 F	Wiring harness Rear lid Right	17-	1	IER5/GY1/I8L
5	95B 971 104 K	Wiring harness Bumper Rear		1	
(5)	95B 971 104 F	Wiring harness Bumper Rear		1	I8A4
6	95B 971 247	Wiring harness Roofliner		1	I3FA/3FU/9MA
6	95B 971 247 A	Wiring harness Roofliner		1	I3FA/3FU/9MB
7	95B 937 403	Support Wiring harness Rear lid Left		1	
(7)	95B 937 403 A	Support Wiring harness Rear lid		1	

Model: 95B **Model life 2014>>**

Pos	Part Number	Description	Remark	Qty	Model
		Right Tie-wrap for Repair work See group 9/02/10			

Illustration: 902-50

PORSCHE

Model: 95B **Model life 2014>>**

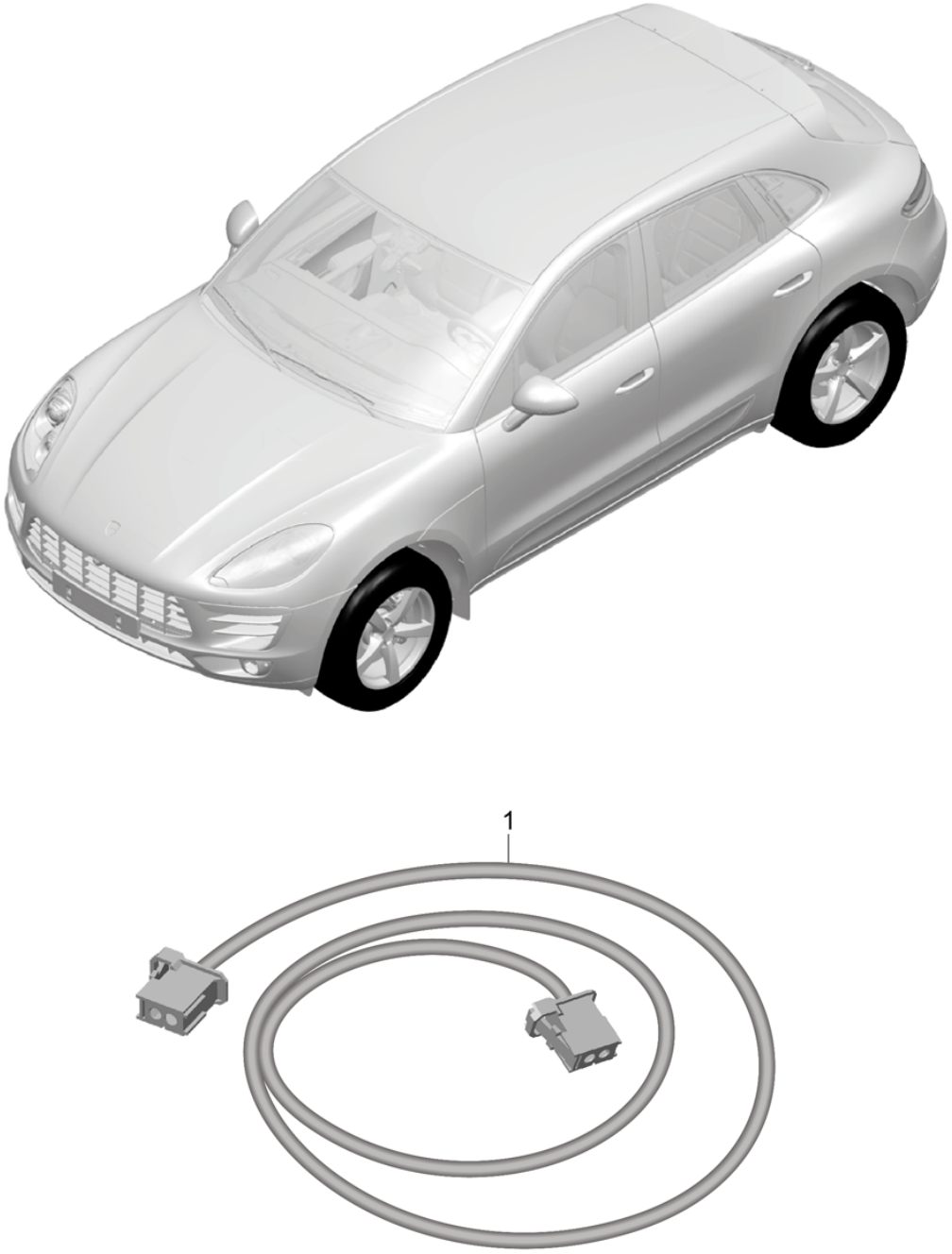

Model: 95B **Model life 2014>>**

Pos	Part Number	Description	Remark	Qty	Model
		Optical waveguide	-16		
1	95B 971 297 A	Optical waveguide Communication Booster		1	IL0L/QU0/QV0 IQV3/QV4/QV8 I9VJ/9VL
1	95B 971 297 F	Optical waveguide Communication Booster		1	IL0R/QU0/QV0 IQV3/9VJ/9VL
(1)	95B 971 297 B	Optical waveguide Communication TV		1	IL0L/QV1/QV5 I9VK
(1)	95B 971 297 G	Optical waveguide Communication TV		1	IL0R/QV1/QV5 I9VK
(1)	95B 971 297 D	Optical waveguide Communication Booster TV		1	IL0L/QV1/QV5 I9VJ/9VL
(1)	95B 971 297 J	Optical waveguide Communication Booster TV		1	IL0R/QV1/QV5 I9VJ/9VL

Illustration: 902-51

PORSCHE

Model: 95B **Model life 2014>>**

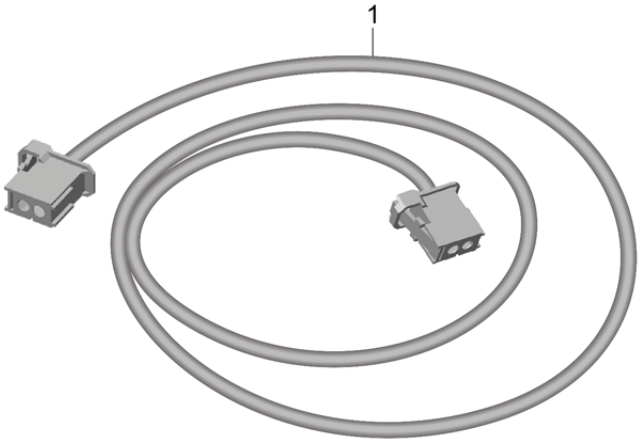

Model: 95B **Model life 2014>>**

Pos	Part Number	Description	Remark	Qty	Model
		Optical waveguide	17-		
1	95B 971 297 K	Optical waveguide Communication Central computer Booster		1	IQU8/QV0/QV3 I7A0/9VJ/9VL
(1)	95B 971 297 M	Optical waveguide Communication Central computer *		1	IQU1/QV1/7A0 I9VK
(1)	95B 971 297 N	Optical waveguide Communication Central computer Booster		1	IQU1/QV1/9VJ I9VL
(1)	95B 971 297 Q	Optical waveguide Communication Central computer Booster		1	IQU8/QV0/QV3 I6G2/9VJ/9VL
(1)	95B 971 297 S	Optical waveguide Communication Central computer *		1	IQU1/QV1/6G2 I9VK
(1)	95B 971 297 T	Optical waveguide Communication Central computer Booster		1	IQU1/QV1/6G2 I9VJ/9VL

Illustration: 902-60

PORSCHE

Model: 95B **Model life 2014>>**

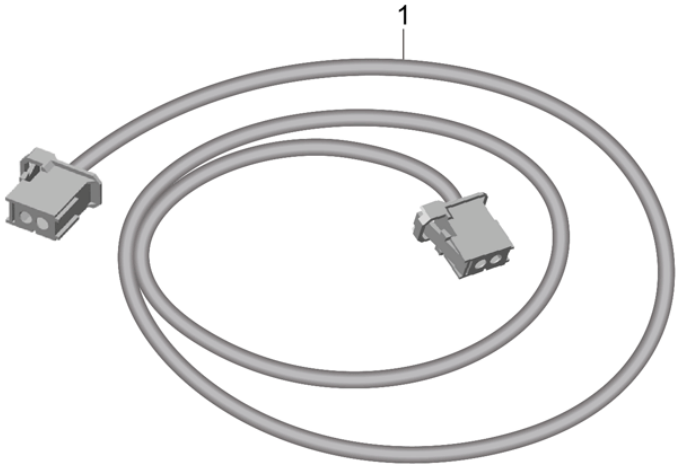

Model: 95B **Model life 2014>>**

Pos	Part Number	Description	Remark	Qty	Model
		Wiring harnesses Airbag Seat belt			
1	95B 971 333	Single line Airbag Passenger's side Setting 1		1	IL0L
1	95B 971 333 K	Single line Airbag Passenger's side Setting 1		1	IL0R/4UD/4UE
(1)	95B 971 333 A	Single line Airbag Passenger's side Setting2		1	IL0L
(1)	95B 971 333 L	Single line Airbag Passenger's side Setting2		1	IL0R/4UD/4UE
(1)	95B 971 333 C	Single line Knee airbag Driver's side		1	IL0L/4UQ
(1)	95B 971 333 B	Single line Knee airbag Passenger's side		1	IL0L/4UQ
(1)	95B 971 331	Single line Head airbag Driver's side		1	IL0L
(1)	95B 971 331 B	Single line Head airbag Driver's side		1	IL0R
(1)	95B 971 331 A	Single line Head airbag Passenger's side		1	IL0L
(1)	95B 971 331 C	Single line Head airbag Passenger's side		1	IL0R
(1)	95B 971 333 J	Single line Airbag Rear Left		1	I4X4
(1)	95B 971 333 H	Single line Airbag Rear Right		1	I4X4
(1)	95B 971 345	Single line Seat-belt tensioner Driver's side Front		1	IL0L/4UE/4UQ
(1)	95B 971 345 D	Single line Seat-belt tensioner Driver's side Front		1	IL0R/4UD/4UE
(1)	95B 971 345 A	Single line Seat-belt tensioner Passenger's side Front		1	IL0L/4UE/4UQ
(1)	95B 971 345 E	Single line Seat-belt tensioner Passenger's side Front		1	IL0R/4UE/4UQ
(1)	95B 971 345 B	Single line Seat-belt tensioner		1	IL0L

Model: 95B **Model life 2014>>**

Pos	Part Number	Description	Remark	Qty	Model
		Driver's side Rear			
(1)	95B 971 345 F	Single line Seat-belt tensioner Driver's side Rear		1	IL0R
(1)	95B 971 345 C	Single line Seat-belt tensioner Passenger's side Rear		1	IL0L
(1)	95B 971 345 G	Single line Seat-belt tensioner Passenger's side Rear		1	IL0R
(1)	95B 971 333 E	Single line Belt Driver's side Front		1	IL0L/4UQ
(1)	95B 971 333 D	Single line Belt Passenger's side Front		1	IL0L/4UQ
(1)	95B 971 333 G	Single line Belt Driver's side Rear		1	IL0L/4UQ
(1)	95B 971 333 F	Single line Belt Passenger's side Rear		1	IL0L/4UQ

Illustration: 903-00

PORSCHE

Model: 95B **Model life 2014>>**

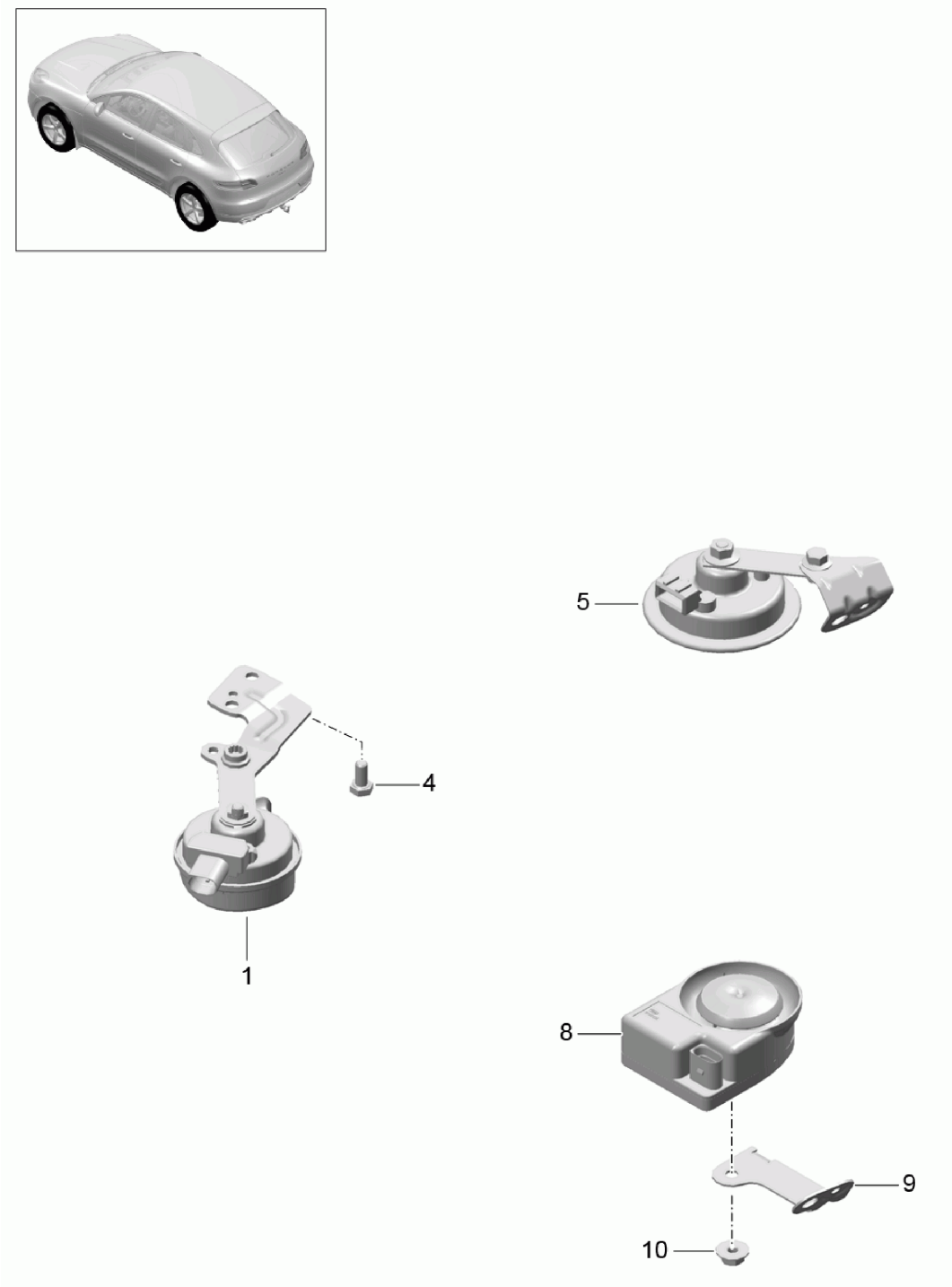

Model: 95B **Model life 2014>>**

Pos	Part Number	Description	Remark	Qty	Model
		Fanfare Horn Alarm siren			
1	95B 951 211 A	Fanfare Low-pitched with Support		1	I8Y2
1	95B 951 211	Fanfare Low-pitched with Support		1	I8Y1
(1)	95B 951 212 A	Fanfare High-pitched with Support		1	I8Y2
(1)	95B 951 212	Fanfare High-pitched with Support		1	I8Y1
3	900 034 001 04	Hexagon nut M 8		2	
4	N 104 139 05	Hexagon-head bolt M 8 X 16		2	
5	95B 951 101 C	Horn	/LL	1	IL0L/7AB/7AC I7AK
5	95B 951 101 D	Horn	/RL	1	IL0R/7AB/7AC I7AK
8	1K0 951 605 C	Alarm siren		1	I7AH/7AL
9	8T1 951 285	Support Alarm siren	/LL	1	IL0L/7AH/7AL
(9)	95B 951 285	Support Alarm siren	/RL	1	IL0R/7AH/7AL
10	N 015 082 10	Hexagon nut M 6		2	
-	N 907 988 05	Collar nut		1	

Illustration: 903-04

PORSCHE

Model: 95B **Model life 2014>>**

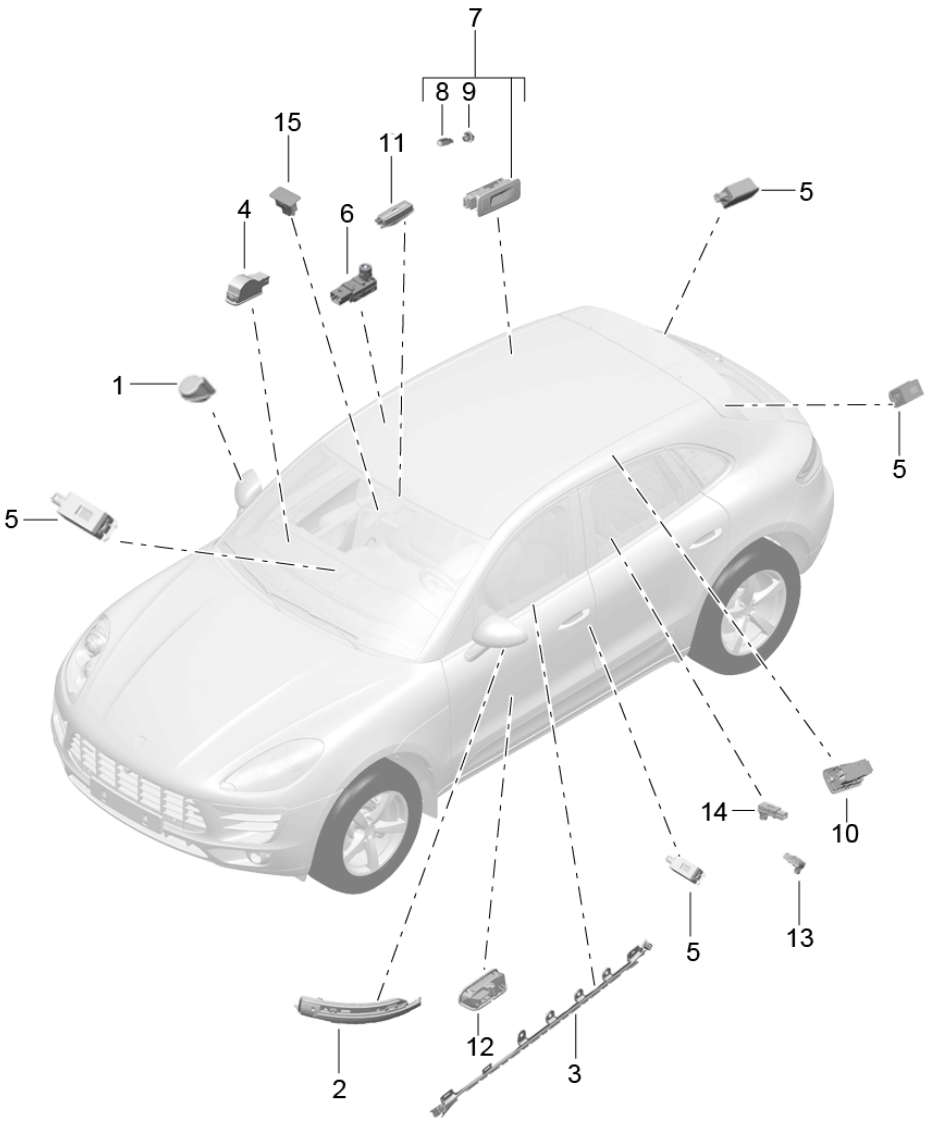

Model: 95B **Model life 2014>>**

Pos	Part Number	Description	Remark	Qty	Model
		Interior lights			
		Luggage compartment lamp			
		Door guard light			
		Footwell light			
(1)	95B 949 133	Light		1	I9TF
		Door mirror			
		Left			
1	95B 949 134	Light		1	I9TF
		Door mirror			
		Right			
2	95B 949 101	Direction indicator light		1	I8F2
		Door mirror			
		Left			
(2)	95B 949 102	Direction indicator light		1	I8F2
		Door mirror			
		Right			
3	95B 947 093	Light		1	I9MB
		Door			
		Front			
		Left			
(3)	95B 947 094	Light		1	I9MB
		Door			
		Front			
		Right			
(3)	95B 947 095	Light		1	I9MB
		Door			
		Rear			
		Left			
(3)	95B 947 096	Light		1	I9MB
		Door			
		Rear			
		Right			
4	4B0 947 415 A	Light		X	I9MA
		Glove compartment		1	
		Luggage compartment lamp		2	
5	4E0 947 415	Light		X	I9MB
		Door		5	
		Footwell		2	
6	958 632 145 00	Light		4	I9MB
		Storage pocket			
		Doors			
(7)	95B 947 291 A	Reading light	/L	1	I9MA
		Rear			
	95B 947 291 A 1E0	Black			+VC,+VJ,+VF,
					+VI,+VU,+VK,
					+VO,+VX,+VZ
	95B 947 291 A 4H0	Luxor Beige			+VE,+VH,+VM
	95B 947 291 A OP1	Agate Grey			+VD,+VG,+VL
					+VQ
	95B 947 291 A 7N0	Espresso			+VR
	95B 947 291 A OM8	Saddle Tan			+VN,+VP
7	95B 947 292 A	Reading light	/R	1	I9MA
		Rear			
	95B 947 292 A 1E0	Black			+VC,+VJ,+VF,
					+VI,+VU,+VK,
					+VO,+VX,+VZ
	95B 947 292 A 4H0	Luxor Beige			+VE,+VH,+VM
	95B 947 292 A OP1	Agate Grey			+VD,+VG,+VL
					+VQ
	95B 947 292 A 7N0	Espresso			+VR
	95B 947 292 A OM8	Saddle Tan			+VN,+VP
8	N 017 753 5	Bulb		X	
		5 W			

Model: 95B **Model life 2014>>**

Pos	Part Number	Description	Remark	Qty	Model
9	7PP 919 244	Bulb socket		2	
10	95B 947 303	Reading light	/L	1	I9MB
		Rear			
	95B 947 303 1E0	Black			+VC,+VJ,+VF,
					+VI,+VU,+VK,
					+VO,+VX,+VZ
	95B 947 303 4H0	Luxor Beige			+VE,+VH,+VM
	95B 947 303 OP1	Agate Grey			+VD,+VG,+VL,
					+VQ
	95B 947 303 7N0	Espresso			+VR
	95B 947 303 OM8	Saddle Tan			+VN,+VP
(10)	95B 947 304	Reading light	/R	1	I9MB
		Rear			
	95B 947 304 1E0	Black			+VC,+VJ,+VF,
					+VI,+VU,+VK,
					+VO,+VX,+VZ
	95B 947 304 4H0	Luxor Beige			+VE,+VH,+VM
	95B 947 304 OP1	Agate Grey			+VD,+VG,+VL,
					+VQ
	95B 947 304 7N0	Espresso			+VR
	95B 947 304 OM8	Saddle Tan			+VN,+VP
11	4H0 947 105 B	Interior light		2	I9MB
		Front			
12	958 632 411 00	Door guard light		X	
		Doors		4	
		Rear lid		2	
13	7PP 919 238 A	Indicator light		2	
		Immobiliser			
14	958 632 242 01	Sleeve		2	
	958 632 242 01 1E0	Black			+VC,+VJ,+VF,
					+VI,+VU,+VK,
					+VO,+VX,+VZ
	958 632 242 01 4H0	Luxor Beige			+VE,+VH,+VM
	958 632 242 01 OP1	Agate Grey			+VD,+VG,+VL,
					+VQ
	958 632 242 01 7N0	Espresso			+VR
	958 632 242 01 OM8	Saddle Tan			+VN,+VP
15	5C5 919 234	Light		1	I4UE/4UQ
		Airbag			
		Cover			
		Interior mirror			

Illustration: 903-05

PORSCHE

Model: 95B **Model life 2014>>**

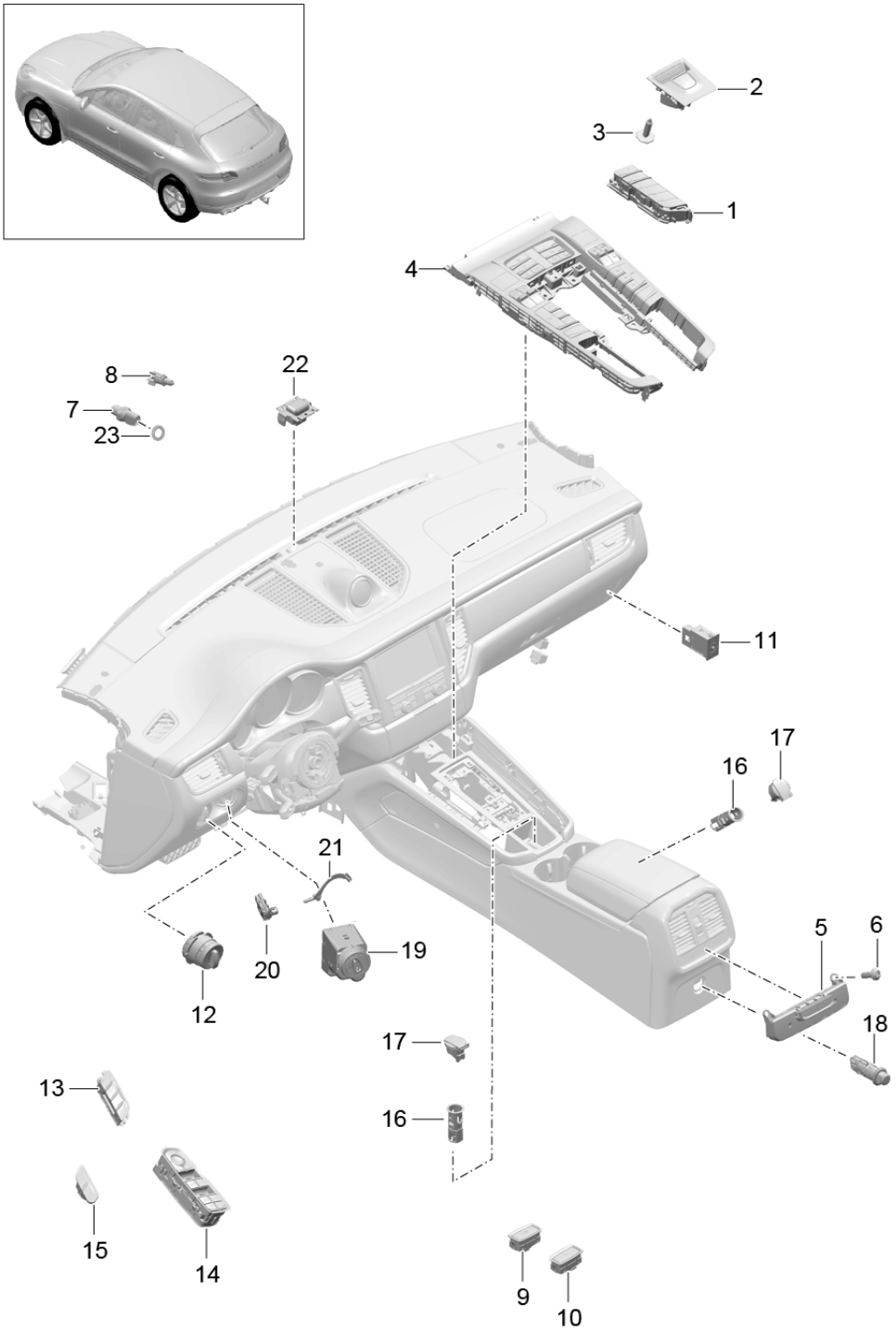

Model: 95B **Model life 2014>>**

Pos	Part Number	Description	Remark	Qty	Model
		Switch Control part Air conditioner			
1	95B 907 041 L	Keypad Left		1	IQR0/QR1/QR3 I1BA
(1)	95B 907 041 L DML 95B 907 041 M	Matt Black/hi-gloss chrome Keypad Left		1	IQR0/QR1/QR3 I1BH
(1)	95B 907 041 M DML 95B 907 041 N	Matt Black/hi-gloss chrome Keypad Left		1	IQR0/QR1/QR3 I1BK
(1)	95B 907 041 N DML 95B 907 041 PX	Matt Black/hi-gloss chrome Keypad Left 95B.907.041.P		1	IQR4/QR5/1BA
(1)	95B 907 041 PX DML 95B 907 041 QX	Matt Black/hi-gloss chrome Keypad Left 95B.907.041Q		1	IQR4/QR5/1BH
(1)	95B 907 041 QX DML 95B 907 041 RX	Matt Black/hi-gloss chrome Keypad Left 95B.907.041.R		1	IQR4/QR5/1BK
(1)	95B 907 041 RX DML 95B 907 042 H	Matt Black/hi-gloss chrome Keypad Right		1	I0P0/0P3/0P6 I7L7/7Y0/7Y1
(1)	95B 907 042 H DML 95B 907 042 J	Matt Black/hi-gloss chrome Keypad Right		1	I0P0/0P3/0P6 I7L4/7L8/7Y0 I7Y1
(1)	95B 907 042 J DML 95B 907 042 K	Matt Black/hi-gloss chrome Keypad Right		1	I0P0/0P3/0P6 I7L7/7Y2/7Y3
(1)	95B 907 042 K DML 95B 907 042 L	Matt Black/hi-gloss chrome Keypad Right		1	I0P0/0P3/0P6 I7L4/7L8/7Y2 I7Y3
(1)	95B 907 042 L DML 95B 907 042 R	Matt Black/hi-gloss chrome Keypad Right		1	I0P8/0P9/7L4 I7L8/7Y2/7Y3
(1)	95B 907 042 R DML 95B 907 042 M	Matt Black/hi-gloss chrome Keypad Right		1	I0P8/0P9/7L7 I7Y0/7Y1
(1)	95B 907 042 M DML 95B 907 042 N	Matt Black/hi-gloss chrome Keypad Right		1	I0P8/0P9/7L4 I7L8/7Y0/7Y1
(1)	95B 907 042 N DML 95B 907 042 Q	Matt Black/hi-gloss chrome Keypad Right		1	I0P8/0P9/7L7 I7Y2/7Y3
(1)	95B 907 042 Q DML 95B 907 042 AA	Matt Black/hi-gloss chrome Keypad		1	I0P8/0P9/7L7 I7Y6/7Y7

Model: 95B **Model life 2014>>**

Pos	Part Number	Description	Remark	Qty	Model
		Right			
	95B 907 042 AA DML	Matt Black/hi-gloss chrome			
(1)	95B 907 042 AB	Keypad		1	I0P8/0P9/7L4 I7L8/7Y6/7Y7
		Right			
	95B 907 042 AB DML	Matt Black/hi-gloss chrome			
2	95B 927 225 A	Switch		1	
		Electric parking brake			
3	N 906 986 06	Tapping screw 4,2 X 16		X	
		Control part Air conditioner Front			
4	95B 907 040 F	Control part	-16	1	I4A0/4D0
	95B 907 040 F DML	Air conditioner			
4	95B 907 040 AF	Control part	17-	1	I4A0/4D0
	95B 907 040 AF DML	Air conditioner			
(4)	95B 907 040 G	Control part	-16	1	I4A3/4A4/4D0
	95B 907 040 G DML	Air conditioner			
(4)	95B 907 040 AG	Control part	17-	1	I4A3/4A4/4D0
	95B 907 040 AG DML	Air conditioner			
(4)	95B 907 040 H	Control part	-16	1	I4A3/4A4/4D3
	95B 907 040 H DML	Air conditioner			
(4)	95B 907 040 AH	Control part	17-	1	I4A3/4A4/4D3
	95B 907 040 AH DML	Air conditioner			
		Control part Air conditioner Rear			
5	95B 907 049 C	Control part Air conditioner		1	I4A4/9AD
(5)	95B 907 049 D	Control part Air conditioner		1	I4A0/4A3/9AQ
(5)	95B 907 049 E	Control part Air conditioner		1	I4A4/9AQ
6	N 104 159 03	Oval-head screw		2	
7	4H0 959 126	Pressure sensor Air conditioner Use also: 9A7.260.749.00		1	
8	7PP 907 527 A	Temperature sensor		1	
9	7PP 959 832 J	Switch Rear lid		1	I4E7/4F2/4F6
	7PP 959 832 J IVI	Black mat			
(9)	7PP 959 832 H	Switch Rear lid		1	I4E7/4K0/4K3
	7PP 959 832 H IVI	Black mat			
11	958 613 165 00	Switch Airbag		1	I4UE
12	7P5 941 531 F	Light switch		1	
13	95B 959 855	Switch Memory Left-hand drive Driver's door	/LL	1	IL0L/2C4/3PH I3PJ/3PN/6XQ I6XT
	95B 959 855 DML	Matt Black/hi-gloss chrome			
(13)	95B 959 856	Switch Memory Left-hand drive	/LL	1	IL0L/2C4/3PH I3PJ/3PN/6XQ I6XT

Model: 95B **Model life 2014>>**

Pos	Part Number	Description	Remark	Qty	Model
		Passenger's door			
	95B 959 856 DML	Matt Black/hi-gloss chrome			
(13)	95B 959 856 A	Switch	/RL	1	IL0R/2C4/3PH I3PJ/3PN/6XQ I6XT
		Memory Right-hand drive Passenger's door			
	95B 959 856 A DML	Matt Black/hi-gloss chrome			
(13)	95B 959 855 C	Switch	/RL	1	IL0R/2C4/3PH I3PJ/3PN/6XQ I6XT
		Memory Right-hand drive Driver's door			
	95B 959 855 C DML	Matt Black/hi-gloss chrome			
14	7PP 959 855 C	Switch		2	
		Power windows Rear			
	7PP 959 855 C DML	Matt Black/hi-gloss chrome			
14	7PP 959 855 C	Switch		1	
		Power windows Passenger's side			
	7PP 959 855 C DML	Matt Black/hi-gloss chrome			
(14)	7PP 959 858 R	Switch		1	
		Power windows Door mirror Driver's side			
	7PP 959 858 R DML	Matt Black/hi-gloss chrome			
(14)	7PP 959 858 Q	Switch		1	I7Y1/7Y3
		Power windows Door mirror Driver's side			
	7PP 959 858 Q DML	Matt Black/hi-gloss chrome			
15	95B 962 125	Switch		1	
		Central locking system Driver's side			
(15)	95B 962 125 A	Switch		1	
		Central locking system Passenger's side			
16	955 652 107 00	Plug socket		3	
		Support		1	
		Beverages Centre console			
		Centre console		2	
		Rear			
(16)	958 652 107 00	Plug socket		3	
		Luggage compartment		1	
		Shelf		1	
		Centre console			
		Sound absorber		1	
		Cold air Passenger's side			
17	958 652 103 00	Tensioning sleeve		1	
		with Lid			
(17)	7PP 919 341	Tensioning sleeve		3	
		Clear			
(17)	6Y0 919 341	Tensioning sleeve		3	
		Black			
18	970 652 101 00	Cigarette lighter		1	
	970 652 101 00 A05	Black mat			

Illustration: 903-05

PORSCHE

Model: 95B **Model life 2014>>**

Pos	Part Number	Description	Remark	Qty	Model
19	7PP 905 865 F	Control unit Ignition starter switch		1	
20	7PP 947 101	Light Ignition starter switch		1	
21	991 632 131 00	Light guide Ignition starter switch	/LL	1	ILOL/L0L
(21)	991 632 132 00	Light guide Ignition starter switch	/RL	1	ILOR/L0R
22	991 653 243 00	Sensor Air conditioner		1	
23	9A7 260 749 00	O-ring Pressure sensor Air conditioner		1	

Illustration: 903-06

PORSCHE

Model: 95B **Model life 2014>>**

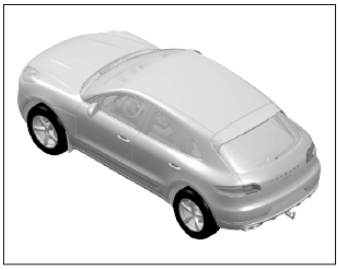

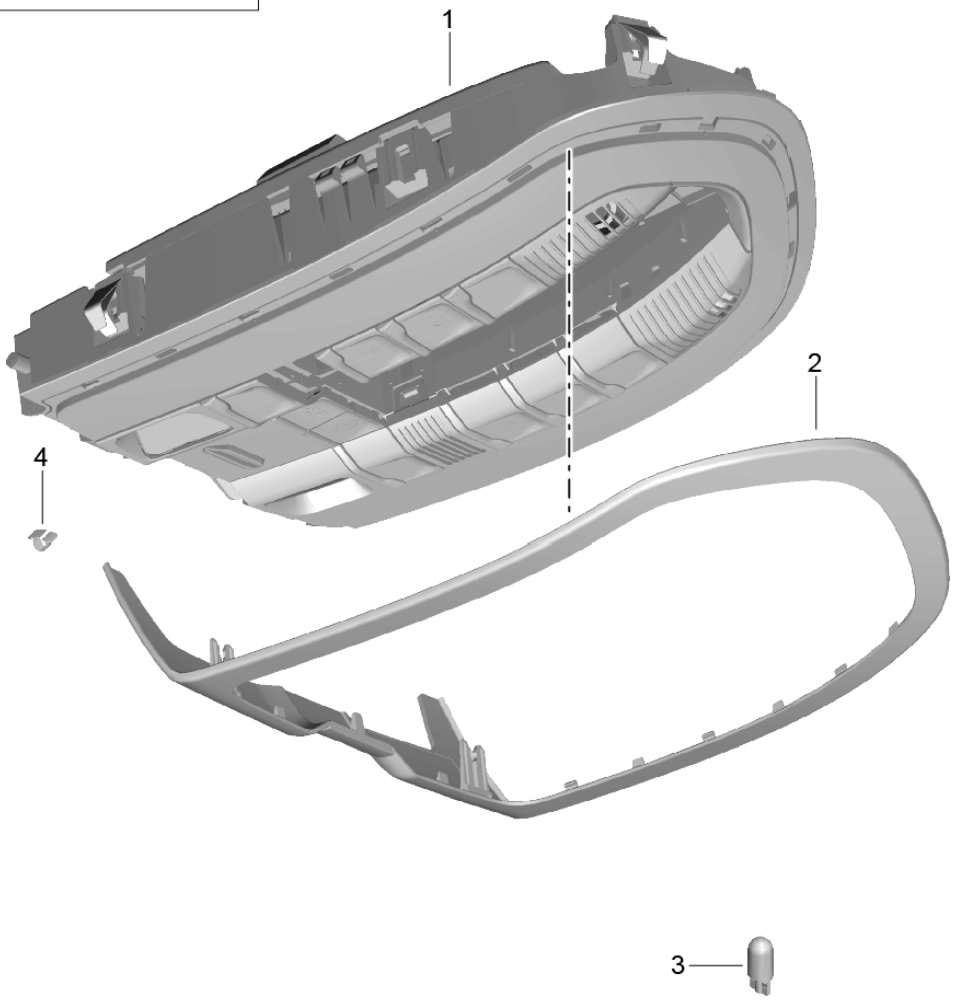

Model: 95B **Model life 2014>>**

Pos	Part Number	Description	Remark	Qty	Model
		Bracket Roof Workshop manual Attention			
1	7PP 868 404 LK	Bracket	-16	1	IVC0/3FA/7Q0 I7Q7/7T1/7T4 I7X0/7X9/9MA
1		Roof Bracket	17-	1	IVC0/3FA/7X0 I7X9/9MA
1	7PP 868 404 LM	Roof Bracket	-16	1	IVC0/3FA/7Q0 I7Q7/7T1/7T4 I7X2/7X8/8A4 I9MA
1		Roof Bracket	17-	1	IVC0/3FA/7X2 I7X8/8A4/9MA
1	7PP 868 404 LN	Roof Bracket	-16	1	IVC1/VC2/3FA I7Q0/7Q7/7T1 I7T4/7X0/7X9 I9MA
1		Roof Bracket	17-	1	IVC1/VC2/3FA I7X0/7X9/9MA
1	7PP 868 404 LQ	Roof Bracket	-16	1	IVC1/VC2/3FA I7Q0/7T1/7T4 I7X2/7X8/8A4 I9MA I7Q7
1		Roof Bracket	17-	1	IVC1/VC2/3FA I7X2/7X8/8A4 I9MA
1	7PP 868 404 LT	Roof Bracket	-16	1	IVC0/3FA/7Q4 I7X0/7X9/9MA
1	7PP 868 404 MB	Roof Bracket	-16	1	IVC0/3FA/7Q4 I7X2/7X8/8A4 I9MA
1	7PP 868 404 MC	Roof Bracket	-16	1	IVC1/VC2/3FA I7Q4/7X0/7X9 I9MA
1	7PP 868 404 ME	Roof Bracket	-16	1	IVC1/VC2/3FA I7Q4/7X2/7X8 I8A4/9MA
1	7PP 868 404 MH	Roof Bracket	-16	1	IVC0/3FA/7Q0 I7Q7/7T1/7T4 I7X0/7X9/9MB
1		Roof Bracket	17-	1	IVC0/3FA/7X0 I7X9/9MB
1	7PP 868 404 MK	Roof Bracket	-16	1	IVC0/3FA/7Q0 I7Q7/7T1/7T4 I7X2/7X8/8A4 I9MB
		Roof			

Model: 95B **Model life 2014>>**

Pos	Part Number	Description	Remark	Qty	Model
1		Bracket	17-	1	IVC0/3FA/7X2 I7X8/8A4/9MB
1	7PP 868 404 ML	Roof Bracket	-16	1	IVC1/VC2/3FA I7Q0/7Q7/7T1 I7T4/7X0/7X9 I9MB
1		Roof Bracket	17-	1	IVC1/VC2/3FA I7X0/7X9/9MB
1	7PP 868 404 MN	Roof Bracket	-16	1	IVC1/VC2/3FA I7Q0/7T1/7T4 I7X2/7X8/8A4 I9MB I7Q7
1		Roof Bracket	17-	1	IVC1/VC2/3FA I7X2/7X8/8A4 I9MB
1	7PP 868 404 MR	Roof Bracket	-16	1	IVC0/3FA/7Q4 I7X0/7X9/9MB
1	7PP 868 404 MT	Roof Bracket	-16	1	IVC0/3FA/7Q4 I7X2/7X8/8A4 I9MB
1	7PP 868 404 NA	Roof Bracket	-16	1	IVC1/VC2/3FA I7Q4/7X0/7X9 I9MB
1	7PP 868 404 NC	Roof Bracket	-16	1	IVC1/VC2/3FA I7Q4/7X2/7X8 I8A4/9MB
(1)	958 613 942 04	Roof Bracket	-16	1	IVC0/3FU/7Q0 I7Q7/7T1/7T4 I7X0/7X9/9MA
(1)		Roof Bracket	17-	1	IVC0/3FU/7X0 I7X9/9MA
(1)	958 613 943 04	Roof Bracket	-16	1	IVC0/3FU/7Q0 I7Q7/7T1/7T4 I7X2/7X8/8A4 I9MA
(1)		Roof Bracket	17-	1	IVC0/3FU/7X2 I7X8/8A4/9MA
(1)	958 613 944 04	Roof Bracket	-16	1	IVC1/VC2/3FU I7Q0/7Q7/7T1 I7T4/7X0/7X9 I9MA
(1)		Roof Bracket	17-	1	IVC1/VC2/3FU I7X0/7X9/9MA
(1)	958 613 945 04	Roof Bracket	-16	1	IVC1/VC2/3FU I7Q0/7T1/7T4 I7X2/7X8/8A4 I9MA I7Q7

Model: 95B **Model life 2014>>**

Pos	Part Number	Description	Remark	Qty	Model
(1)		Bracket	17-	1	IVC1/VC2/3FU I7X2/7X8/8A4 I9MA
(1)	958 613 946 04	Roof Bracket	-16	1	IVC0/3FU/7Q4 I7X0/7X9/9MA
(1)	958 613 947 04	Roof Bracket	-16	1	IVC0/3FU/7Q4 I7X2/7X8/8A4 I9MA
(1)	958 613 948 04	Roof Bracket	-16	1	IVC1/VC2/3FU I7Q4/7X0/7X9 I9MA
(1)	958 613 949 04	Roof Bracket	-16	1	IVC1/VC2/3FU I7Q4/7X2/7X8 I8A4/9MA
(1)	7PP 868 404 NP	Roof Bracket	-16	1	IVC0/3FU/7Q0 I7Q7/7T1/7T4 I7X0/7X9/9MB
(1)		Roof Bracket	17-	1	IVC0/3FU/7X0 I7X9/9MB
(1)	958 613 951 04	Roof Bracket	-16	1	IVC0/3FU/7Q0 I7Q7/7T1/7T4 I7X2/7X8/8A4 I9MB
(1)		Roof Bracket	17-	1	IVC0/3FU/7X2 I7X8/8A4/9MB
(1)	958 613 952 04	Roof Bracket	-16	1	IVC1/VC2/3FU I7Q0/7Q7/7T1 I7T4/7X0/7X9 I9MB
(1)		Roof Bracket	17-	1	IVC1/VC2/3FU I7X0/7X9/9MB
(1)	958 613 953 04	Roof Bracket	-16	1	IVC1/VC2/3FU I7Q0/7T1/7T4 I7X2/7X8/8A4 I9MB
(1)		Roof Bracket	17-	1	I7Q7 IVC1/VC2/3FU I7X2/7X8/8A4 I9MB
(1)	958 613 954 04	Roof Bracket	-16	1	IVC0/3FU/7Q4 I7X0/7X9/9MB
(1)	958 613 955 04	Roof Bracket	-16	1	IVC0/3FU/7Q4 I7X2/7X8/8A4 I9MB
(1)	958 613 956 04	Roof Bracket	-16	1	IVC1/VC2/3FU I7Q4/7X0/7X9 I9MB
(1)	958 613 957 04	Roof Bracket	-16	1	IVC1/VC2/3FU

Model: 95B **Model life 2014>>**

Pos	Part Number	Description	Remark	Qty	Model
					I7Q4/7X2/7X8 I8A4/9MB
		Roof			
2	7PP 919 317	Cover		1	
		Bracket			
		Roof			
	7PP 919 317 6W0	Luxor Beige			+VE,+VH,+VM
	7PP 919 317 0A6	Agate Grey			+VD,+VG,+VL, +VQ
	7PP 919 317 5Q0	Black			+VC,+VJ,+VF, +VI,+VU,+VK, +VO,+VX,+VZ
3	999 631 032 90	Bulb		X	
		W5W			
4	95B 868 771	Spring clamp		X	

Illustration: 903-10

PORSCHE

Model: 95B **Model life 2014>>**

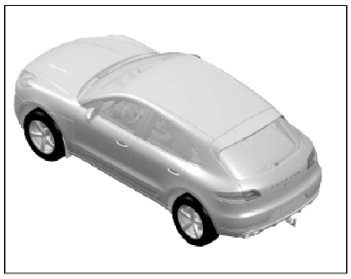

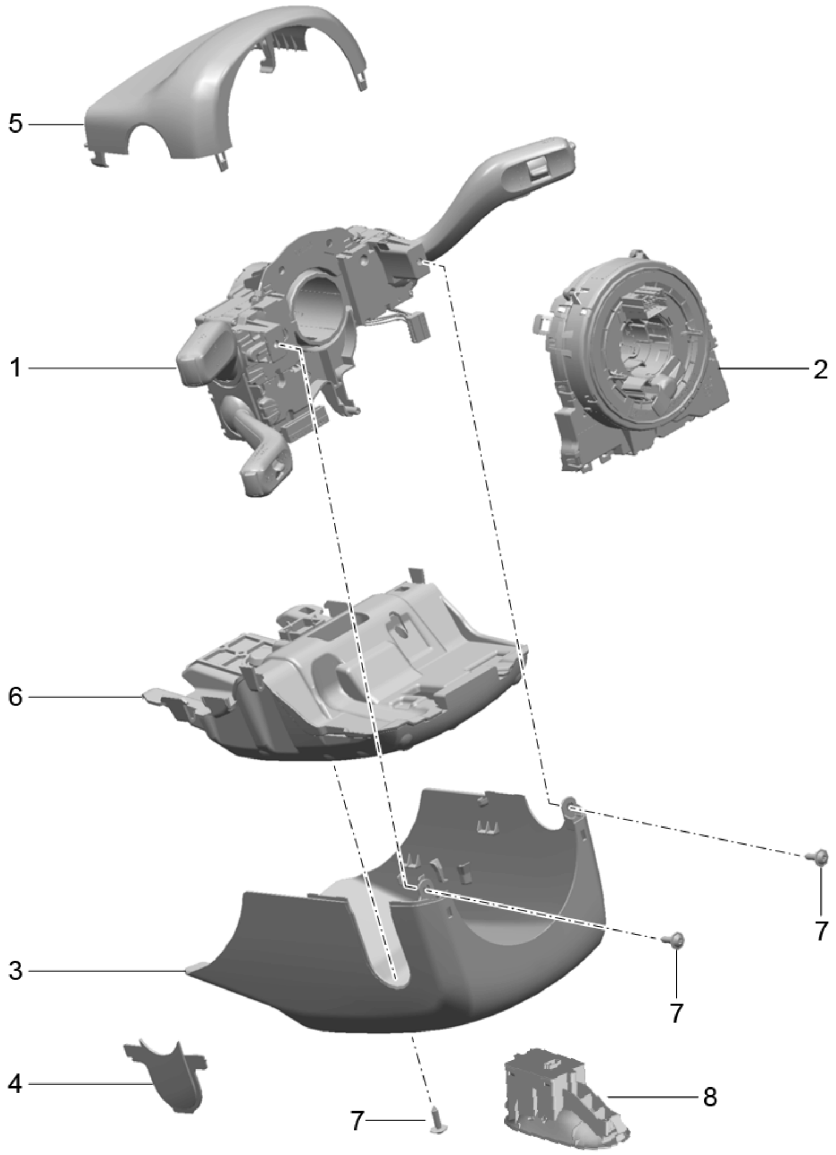

Model: 95B **Model life 2014>>**

Pos	Part Number	Description	Remark	Qty	Model
		Steering column switch			
1	95B 953 502 A	Steering column switch		1	IQH0/8T0/8X1
1	95B 953 502 B	Steering column switch		1	IQH1/8T0/8X0
1	95B 953 502 C	Steering column switch		1	IQH1/8T0/8X1
1	95B 953 502 D	Steering column switch		1	IQH0/8T3/8X0
1	95B 953 502 E	Steering column switch		1	IQH0/8T3/8X1
1	95B 953 502 F	Steering column switch		1	IQH1/8T3/8X0
1	95B 953 502 H	Steering column switch		1	IQH1/8T3/8X1
1	95B 953 502 J	Steering column switch		1	IQH0/8T1/8X0
1	95B 953 502 K	Steering column switch		1	IQH0/8T1/8X1
1	95B 953 502 L	Steering column switch		1	IQH1/8T1/8X0
1	95B 953 502 M	Steering column switch		1	IQH1/8T1/8X1
1	95B 953 502 N	Steering column switch		1	IQH0/8T0/8X0
1	95B 953 502 P	Steering column switch		1	IQH0/1XA/1XG I2FX/2ZH/8T6 I8X0
1	95B 953 502 R	Steering column switch		1	IQH0/1XA/1XG I2FX/2ZH/8T6 I8X1
1	95B 953 502 S	Steering column switch		1	IQH1/1XA/1XG I2FX/2ZH/8T6 I8X0
1	95B 953 502 T	Steering column switch		1	IQH1/1XA/1XG I2FX/2ZH/8T6 I8X1
2	95B 953 568	Control unit Steering column switch Included Spring Steering-angle sensor		1	I2PX/2ZM
2	95B 953 568 A	Control unit Steering column switch Included Spring Steering-angle sensor		1	I1XE/1XG/2FX I2ZH/2ZU
3	95B 953 516 D	Switch housing Lower		1	I2C5
	95B 953 516 D 5Q0	Black			
(3)	95B 953 516 E	Switch housing Lower		1	I2C4
	95B 953 516 E 5Q0	Black			
4	95B 953 565 A	Lid Lower		1	I8T0
	95B 953 565 A 5Q0	Black			
5	95B 953 515 B	Switch housing Upper		1	
	95B 953 515 B 5Q0	Black			
6	95B 880 515	Impact absorber		1	I2C5
(6)	95B 880 515 A	Impact absorber		1	I2C4
7	N 906 986 06	Tapping screw ST 4,2 X 16		3	
8	7PP 953 519 D	Switch Adjustment Steering column		1	I2C4
	7PP 953 519 D IVI	Black mat			

Illustration: 904-00

PORSCHE

Model: 95B **Model life 2014>>**

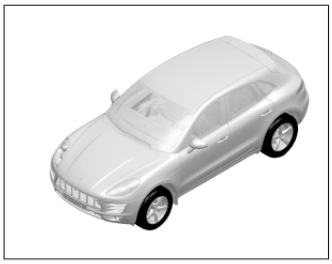

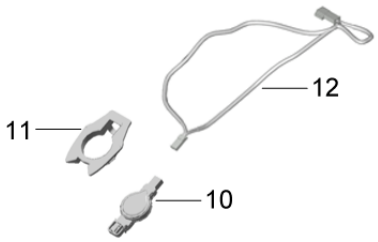

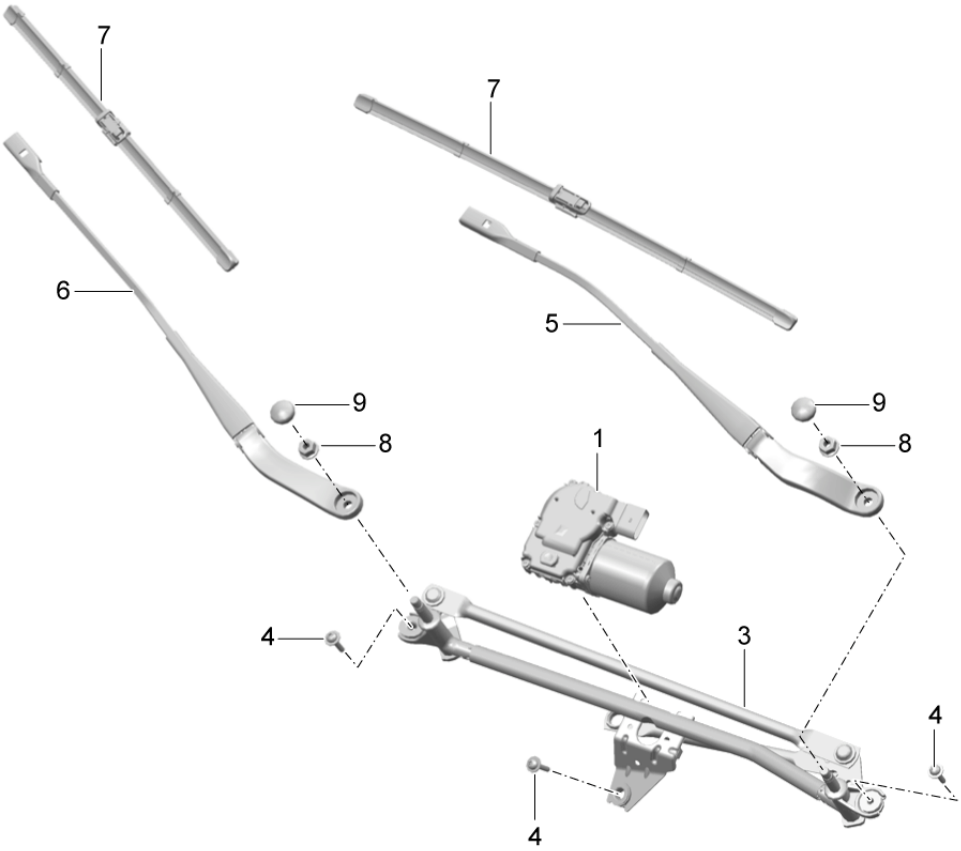

Model: 95B **Model life 2014>>**

Pos	Part Number	Description	Remark	Qty	Model
		Windscreen wiper system			
		Rain sensor			
1	95B 955 113 A	Wiper motor	/LL	1	IL0L
(1)	95B 955 114 A	Wiper motor	/RL	1	IL0R
3	95B 955 601 A	Crank drive	/LL	1	IL0L
(3)	95B 955 602 A	Crank drive	/RL	1	IL0R
4	N 105 355 02	Pan-head screw		3	
		M 6 X 30			
5	95B 955 407	Wiper arm	/LL	1	IL0L
		Driver's side			
(5)	95B 955 407 A	Wiper arm		1	IL0R
		Passenger's side			
6	95B 955 408	Wiper arm		1	IL0L
		Passenger's side			
(6)	95B 955 408 A	Wiper arm		1	IL0R
		Driver's side			
7	95B 998 001	Wiper blade		1	IL0L
		Set			
(7)	95B 998 002	Wiper blade		1	IL0R
		Set			
8	N 102 613 11	Hexagon nut		2	
		M 10			
9	958 628 305 00	Cap		2	
		Driver's side			
10	7P0 955 559 E	Rain sensor		1	I8N7/8N8
11		Adhesive plate		1	
		Is a component of			
		Windscreen			
12	95B 971 375	Adapter		1	
		Line			
		Rain sensor			

Illustration: 904-05

PORSCHE

Model: 95B **Model life 2014>>**

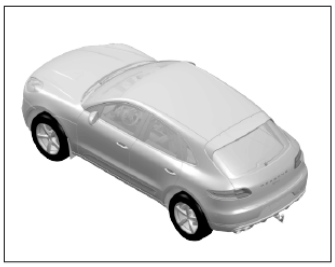

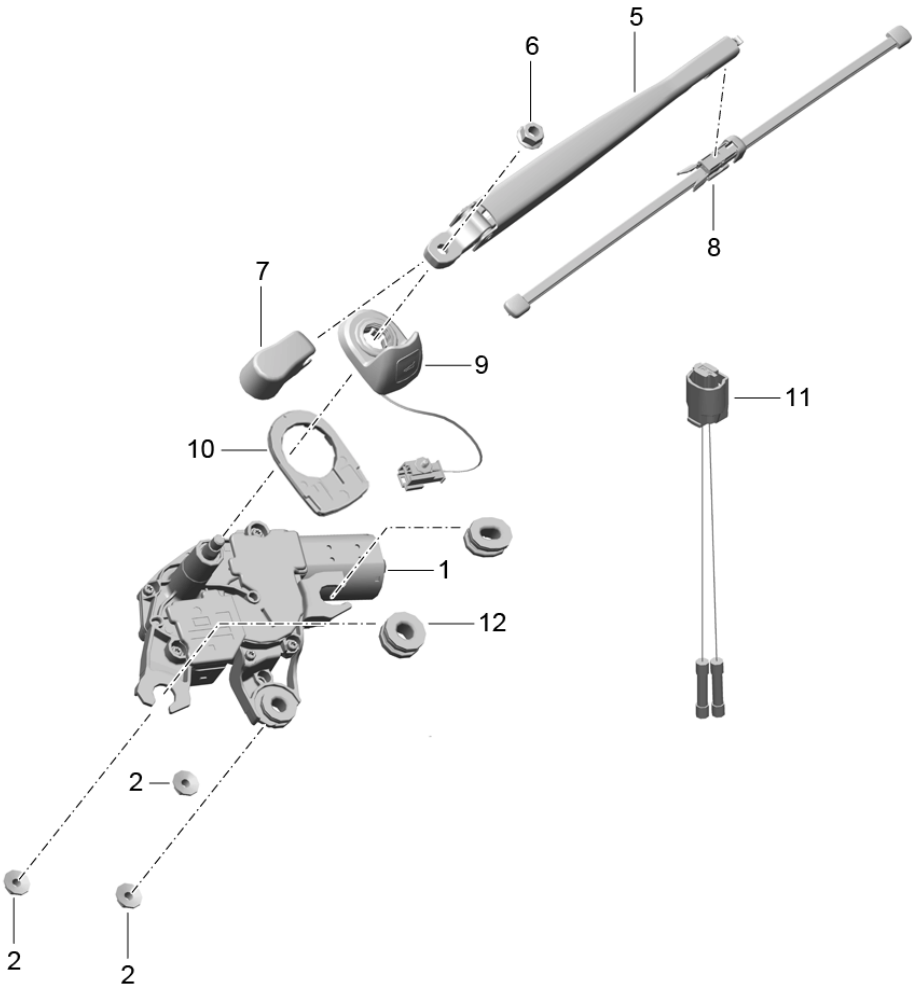

Model: 95B **Model life 2014>>**

Pos	Part Number	Description	Remark	Qty	Model
		Rear window wiper			
1	95B 955 711	Wiper motor	-15	1	
		Use also:			
		N .011.696.4		2	
1		Wiper motor	16-	1	
2	999 076 078 01	Hexagon nut		3	
		M 6			
5	970 628 169 01	Wiper arm		1	
6	N 106 092 04	Hexagon nut		1	
		M 8			
7	970 628 123 00	Cap		1	
8	970 628 189 00	Wiper blade		1	
9	95B 927 227 A	Tip switch	-14	1	
		Rear lid			
		Use also:			
		95B.998.030			
(9)	95B 927 227 B	Tip switch	15-	1	
		Rear lid			
10	95B 927 347 A	Support		1	
		Tip switch			
		Rear lid			
11	95B 998 030	Adapter		1	
		Cable			
		Tip switch			
		Rear lid			
12	N 011 696 4	Washer	-15	2	
		Wiper motor			

Illustration: 904-10

PORSCHE

Model: 95B **Model life 2014>>**

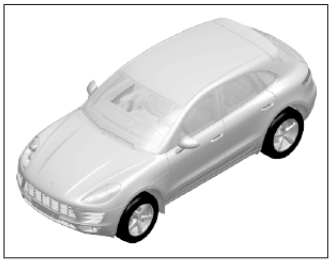

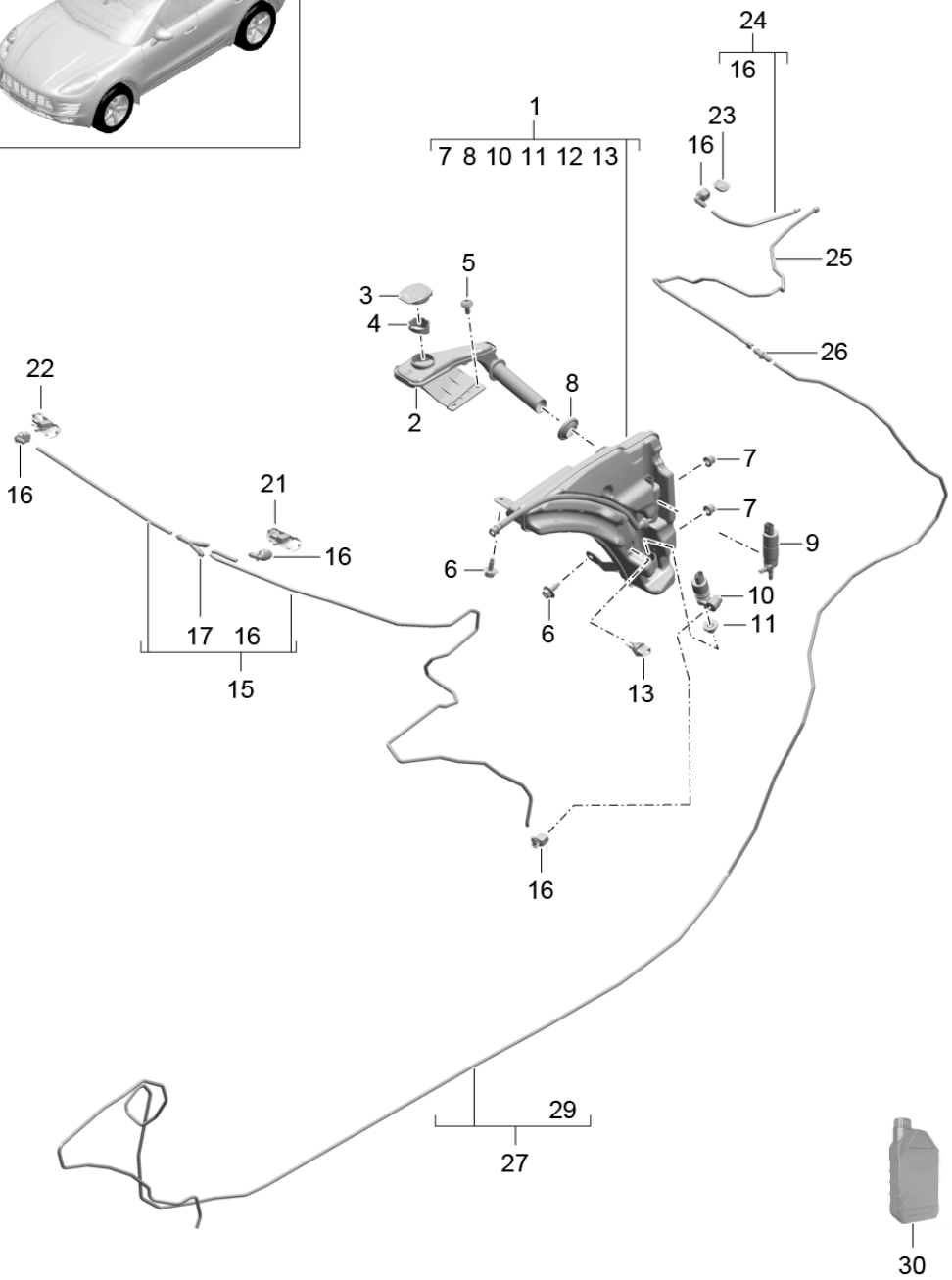

Model: 95B **Model life 2014>>**

Pos	Part Number	Description	Remark	Qty	Model
		Windscreen washer system			
1	95B 955 451	Water reservoir Complete		1	I8X1
(1)	95B 955 451 A	Water reservoir Complete		1	I8X0
2	95B 955 452	Filler neck		1	
3	1K0 955 455	Lid	-14	1	
3	3Q0 955 455	Lid	15-	1	
4	8Z0 955 485	Strainer	-14	1	
(4)	3D0 955 485 A	Strainer	15-	1	
5	N 907 378 03	Round head screw M 6 X 14		1	
6	N 908 204 01	Hexagon-head bolt M 6 X 16		2	
7	999 702 221 40	Grommet		2	
8	3C0 955 489 A	Gasket Filler neck		1	
9		Pump See illustrations 9/04/20		1	
10	955 628 172 01	Pump		1	
11	431 955 465 A	Gasket		1	
12	955 528 721 00	Gasket		1	
13	955 628 105 00	Tank gauge switch		1	
15	95B 955 960	Water line Front Complete		1	
16	955 628 200 01	Angled pipe		3	
17	955 628 210 00	Distributing piece		1	
21	95B 955 986	Spray nozzle Left Information available	/L	1	
22	95B 955 986 A	Spray nozzle Right Information available	/R	1	
23	95B 955 985	Spray nozzle Rear end		1	
24	95B 955 961	Water line Rear Complete		1	
25	95B 955 571	Water line Connecting line Rear Complete		1	IL0L
26	95B 955 569	Connecting piece		2	
27	95B 955 963	Water line Connecting line Complete		1	IL0L
(27)	95B 955 963 A	Water line Connecting line Complete		1	IL0R
29	95B 955 793	Connecting piece		1	
30	999 901 017 42	Window cleaner 250 ML Summer		X	
(30)	999 901 033 40	Window cleaner 1000 ML Winter		X	

Illustration: 904-20

PORSCHE

Model: 95B **Model life 2014>>**

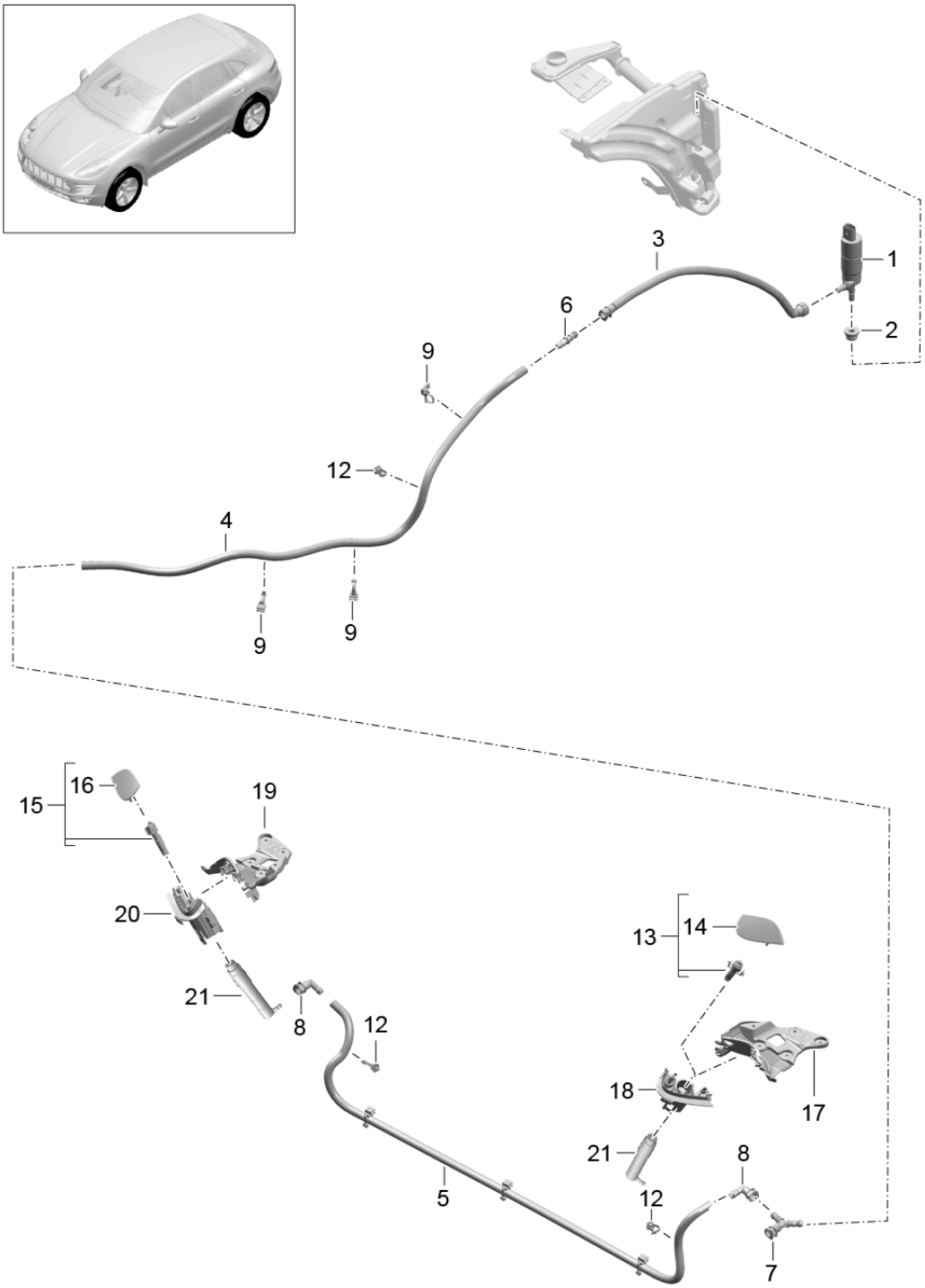

Model: 95B **Model life 2014>>**

Pos	Part Number	Description	Remark	Qty	Model
		Headlight washer system			I8X1
1	6R0 955 681	Pump		1	
2	431 955 465 A	Gasket		1	
3	95B 955 970	Hose		1	
		Headlight washer system			
-	7P5 955 964	Hose		X	
		Headlight washer system			
4		955 MM		1	
5		1160 MM		1	
6	997 628 208 00	Hose connection		1	
7	95B 955 875	Clutch		1	
		Y-piece			
8	1J0 955 665 E	Angled pipe		2	
9	958 612 838 00	Tie-wrap		3	
12	N 906 661 01	Tie-wrap		3	
13	95B 955 099 A	Jet carrier	/L	1	I8X1
		Left			
14	95B 955 283 A	Cover	/L	1	I8X0/8X1
		Jet carrier			
		Left			
15	95B 955 100 A	Jet carrier	/R	1	I8X1
		Right			
16	95B 955 284 A	Cover	/R	1	I8X0/8X1
		Jet carrier			
		Right			
17	95B 955 127 B	Cover	/L	1	I8X1
		Headlamp			
18	95B 955 159 B	Support	/L	1	I8X1
		Jet carrier			
(18)	95B 955 159 C	Support	/L	1	I8X0
		Cover			
19	95B 955 128 B	Cover	/R	1	I8X1
		Headlamp			
20	95B 955 160 B	Support	/R	1	I8X1
		Jet carrier			
(20)	95B 955 160 C	Support	/R	1	I8X0
		Cover			
21	95B 955 978	Lifting mechanism		2	I8X1
		Jet carrier			

Illustration: 905-00

PORSCHE

Model: 95B **Model life 2014>>**

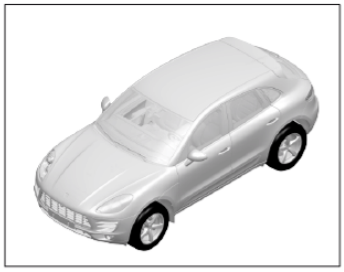

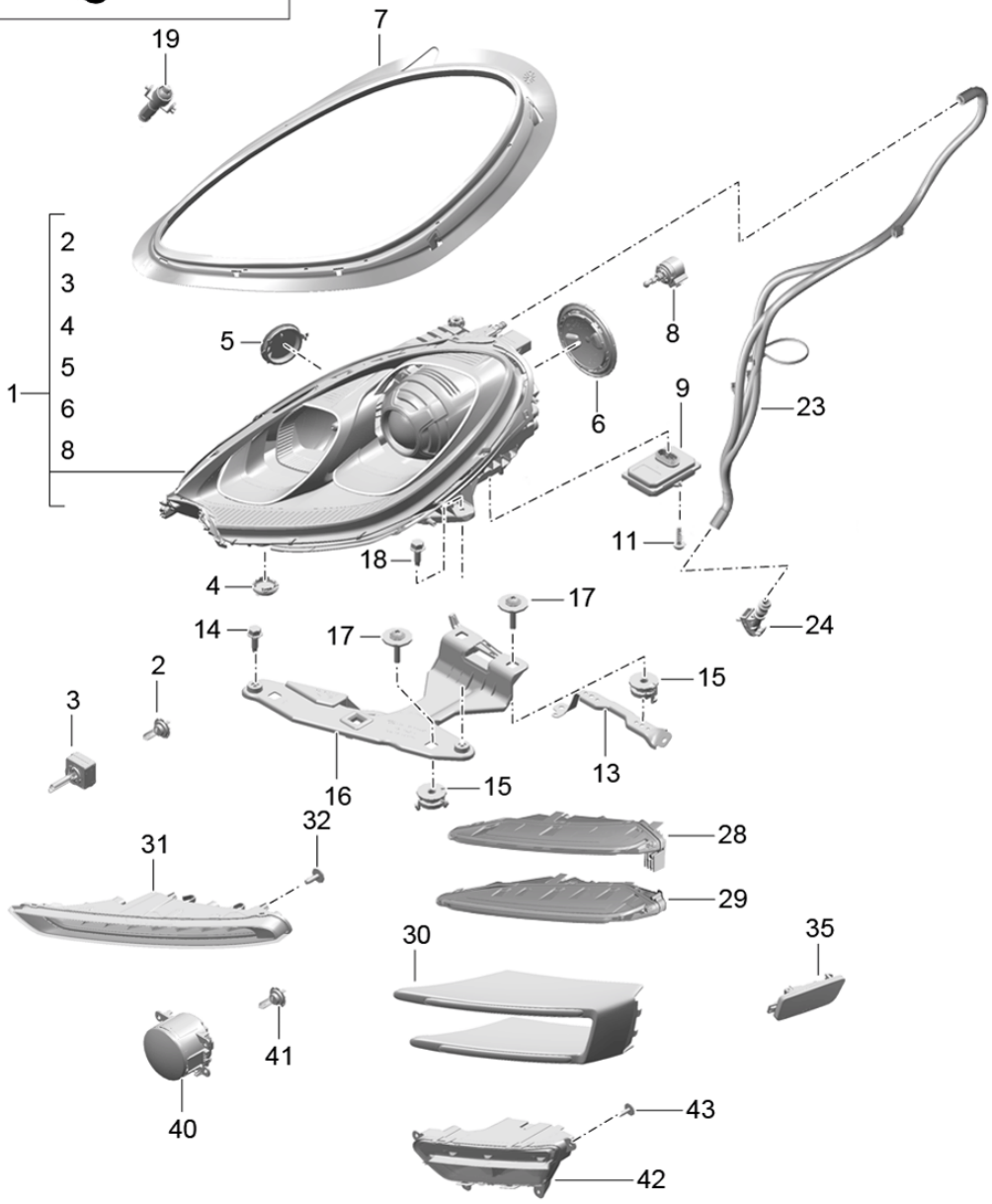

Model: 95B **Model life 2014>>**

Pos	Part Number	Description	Remark	Qty	Model
		Headlamp			I8BB/8BF/8BR
		Halogen bulb			
		Direction indicator light			
		Fog headlamp			
(1)	95B 941 029 AA	Headlamp	/L	1	-IB1P/I8BF
					I8Q2
(1)	95B 941 030 AA	Headlamp	/R	1	-IB1P/I8BF
					I8Q2
(1)	95B 941 029 T	Headlamp	/L	1	-IB1P/I8BB
					I8Q2
(1)	95B 941 030 T	Headlamp	/R	1	-IB1P/I8BB
					I8Q2
2	999 631 133 91	Halogen bulb		4	
		H 7			
4	997 631 267 01	Ventilation component		2	
		Lower			
5	991 631 313 00	Protective cap		2	
6	95B 941 363	Protective cap		2	
		Rear			
7	95B 941 323 B	Gasket	/L	1	
(7)	95B 941 323 C	Gasket	/R	1	
8	991 631 327 02	Electric motor		2	
		Headlight levelling system			
9	7PP 941 329 N	Control unit		2	I8BE/8EA/8EE
					I8EF/8EG/8JE
		Power electronics			
(9)	7PP 941 329 T	Control unit	16-	2	I8BE/8EA/8EE
					I8EF/8EG/8JE
		Power electronics			
11	999 919 159 09	Oval-head screw		8	
		4,0 X 12,0			
13	95B 941 451 B	Support	/L	1	
		Adjustment			
		Headlamp			
(13)	95B 941 452 B	Support	/R	1	
		Adjustment			
		Headlamp			
14	N 101 586 05	Hexagon-head bolt		4	
		M6 X 20			
15	WHT 006 897	Speed nut		4	
16	95B 941 121 A	Retainer plate	/L	1	
(16)	95B 941 122 A	Retainer plate	/R	1	
17	N 910 702 01	Combination screw		8	
		M6 X 30			
(18)	N 100 092 09	Hexagon-head bolt		4	
		M6 X 20			
19	95B 955 101	Jet carrier	/L	1	I8X1
		Left			
		Headlamp			
(19)	95B 955 102	Jet carrier	/R	1	I8X1
		Right			
		Headlamp			
23	95B 941 559 A	Breather hose		1	
		Left			
(23)	95B 941 560 B	Breather hose		1	
		Right			
(23)	95B 941 560 C	Breather hose		1	
		Right			
24	95B 941 741 A	Nozzle		2	
		Breather hose			
28	95B 953 049 A	Direction indicator light	/L	1	

Model: 95B **Model life 2014>>**

Pos	Part Number	Description	Remark	Qty	Model
(28)	95B 953 050 A	Direction indicator light	/R	1	
29	95B 941 107 A	Position light	/L	1	
(29)	95B 941 108 A	Position light	/R	1	
30	95B 998 021	Repair kit Additional headlamp	/L	1	
(30)	95B 998 022	Repair kit Additional headlamp	/R	1	
31	95B 941 181	Additional headlamp Included Direction indicator light	/L	1	
(31)	95B 941 182	Additional headlamp Included Direction indicator light	/R	1	
32	N 909 747 01	Oval-head sheetmetal screw 5 X 16		4	
40	955 631 163 00	Fog headlamp		2	I8WB/8WH
41	N 105 297 01	Halogen bulb H 11		2	I8WB/8WH
42	95B 941 699 B	Fog headlamp	/L	1	I8WB/8WH
42	95B 941 700 B	Fog headlamp	/R	1	I8WB/8WH
43	N 909 747 01	Oval-head sheetmetal screw 5 X 16		8	

Illustration: 905-01

PORSCHE

Model: 95B **Model life 2014>>**

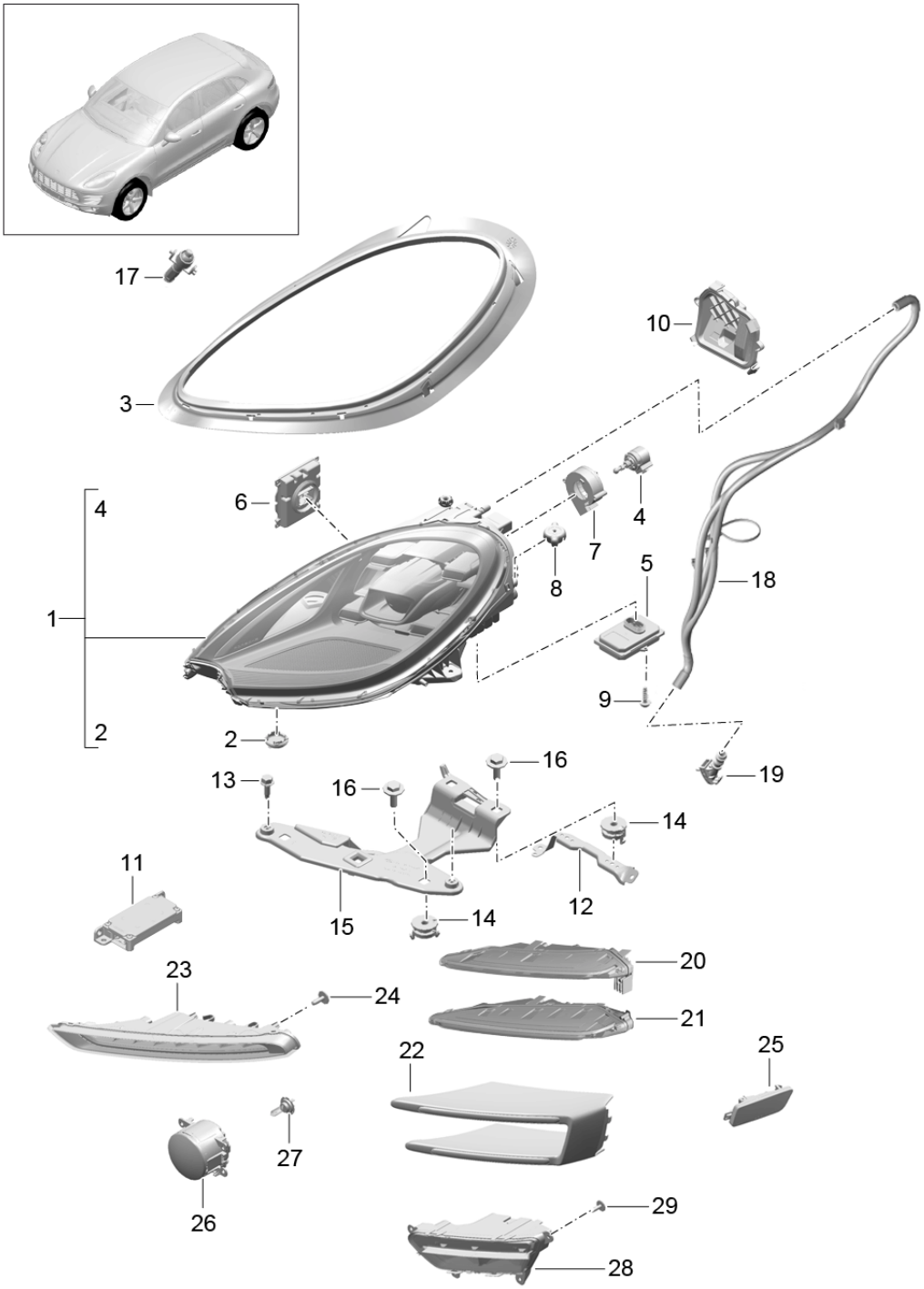

Model: 95B **Model life 2014>>**

Pos	Part Number	Description	Remark	Qty	Model
		LED headlights	17-		I8EX/8EY/8IS
		Direction indicator light			
		Side marker light			
(1)	95B 941 039 G	LED headlights	/L	1	I8IS/8Q3
(1)	95B 941 040 G	LED headlights	/R	1	I8IS/8Q3
(1)	95B 941 039 F	LED headlights	/L	1	I8EX/8Q3
(1)	95B 941 040 F	LED headlights	/R	1	I8EX/8Q3
2	997 631 267 01	Ventilation component		2	
		Lower			
3	95B 941 323 E	Gasket	/L	1	
(3)	95B 941 323 D	Gasket	/R	1	
4	991 631 327 02	Electric motor		2	
		Headlight levelling system			
5	7PP 941 329 T	Control unit		2	
		Power electronics			
6	9A7 941 572 00	Control unit		2	
		LED module			
7	9A7 907 463 00	Fan		2	
		LED module			
9	999 919 159 09	Oval-head screw		8	
		4,0 X 12,0			
10	95B 941 159	Cap	/L	1	
(10)	95B 941 158	Cap	/R	1	
11	7PP 941 597 B	Control unit		1	
		Daytime driving lights			
12	95B 941 451 C	Support	/L	1	
		Adjustment			
		Headlamp			
(12)	95B 941 452 C	Support	/R	1	
		Adjustment			
		Headlamp			
13	N 101 586 05	Hexagon-head bolt		4	
		M6 X 20			
14	WHT 006 897	Speed nut		4	
15	95B 941 121 B	Retainer plate	/L	1	
(15)	95B 941 122 B	Retainer plate	/R	1	
16	N 100 092 09	Hexagon-head bolt		4	
		M6 X 20			
17	95B 955 101	Jet carrier	/L	1	I8X1
		Left			
		Headlamp			
(17)	95B 955 102	Jet carrier	/R	1	I8X1
		Right			
		Headlamp			
18	95B 941 559 B	Breather hose		1	
		Left			
(18)	95B 941 560 C	Breather hose		1	
		Right			
19	95B 941 741 A	Nozzle		2	
		Breather hose			
20	95B 953 049 A	Direction indicator light	/L	1	
(20)	95B 953 050 A	Direction indicator light	/R	1	
21	95B 941 107 A	Position light	/L	1	
(21)	95B 941 108 A	Position light	/R	1	
22	95B 998 021	Repair kit	/L	1	
		Additional headlamp			
(22)	95B 998 022	Repair kit	/R	1	
		Additional headlamp			
23	95B 941 181 A	Additional headlamp	/L	1	
		Included			
		Direction indicator light			
(23)	95B 941 182 A	Additional headlamp	/R	1	

Model: 95B **Model life 2014>>**

Pos	Part Number	Description	Remark	Qty	Model
		Included			
		Direction indicator light			
24	N 909 747 01	Oval-head sheetmetal screw 5 X 16		4	
26	955 631 163 00	Fog headlamp		2	I8WB/8WH
27	N 105 297 01	Halogen bulb H 11		2	I8WB/8WH
28	95B 941 699 C	Fog headlamp	/L	1	I8WB/8WH
28	95B 941 700 C	Fog headlamp	/R	1	I8WB/8WH
29	N 909 747 01	Oval-head sheetmetal screw 5 X 16		8	

Illustration: 905-03

PORSCHE

Model: 95B **Model life 2014>>**

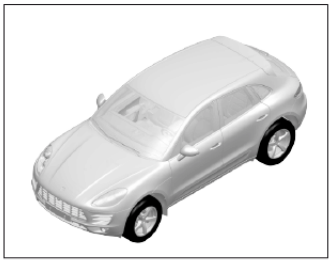

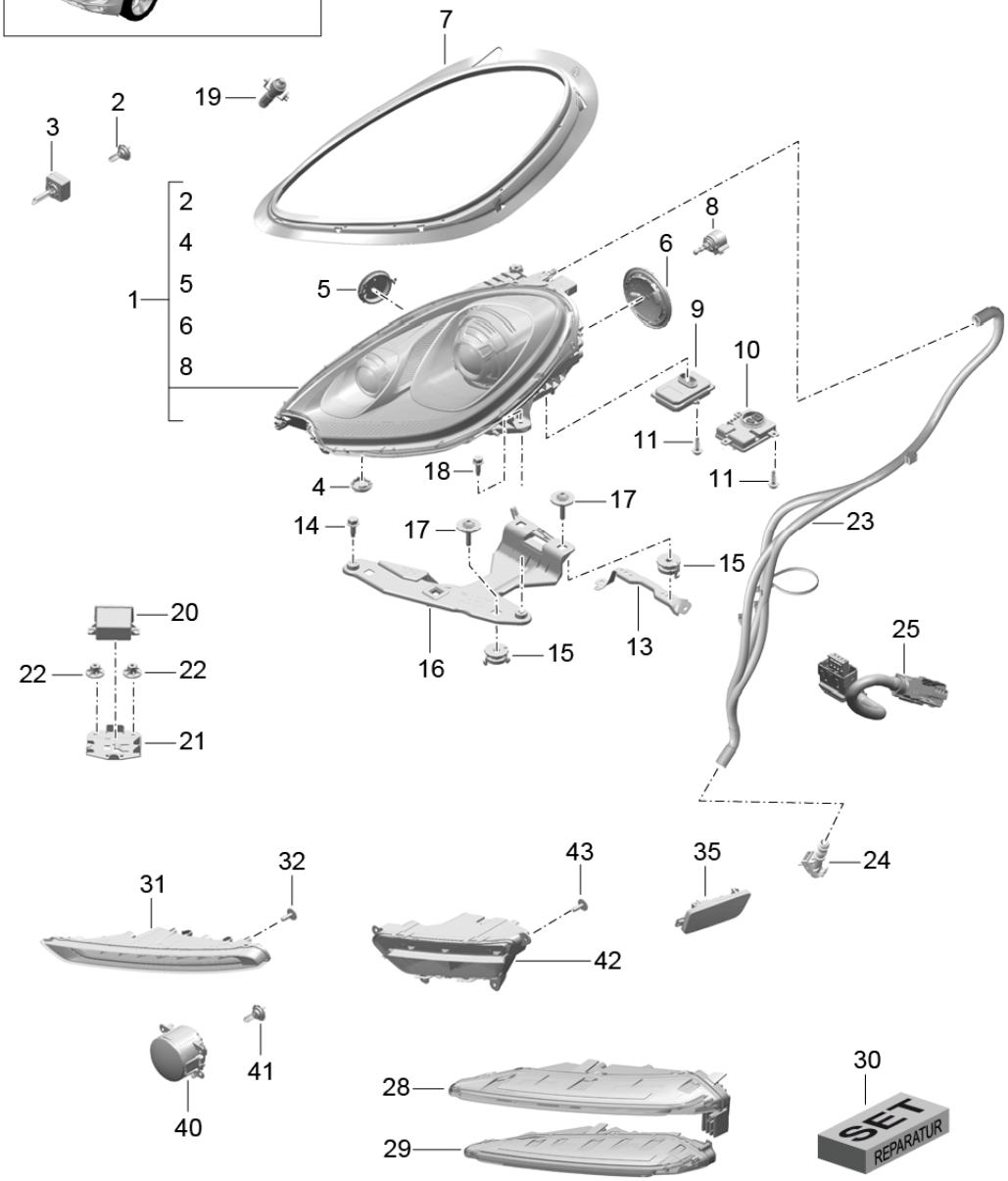

Model: 95B **Model life 2014>>**

Pos	Part Number	Description	Remark	Qty	Model
		Headlamp			I8BB/8BC/8BE I8BZ/8EA/8EF I8JD/8JE
		XENON Direction indicator light Fog headlamp			
(1)	95B 941 029 AG	Headlamp	/L	1	I8BZ/8Q3
(1)	95B 941 030 AG	Headlamp	/R	1	I8BZ/8Q3
(1)	95B 941 029 AD	Headlamp	/L	1	I8BE
(1)	95B 941 030 AD	Headlamp	/R	1	I8BE
(1)	95B 941 029 AF	Headlamp	/L	1	I8BC/8Q3
(1)	95B 941 030 AF	Headlamp	/R	1	I8BC/8Q3
(1)	95B 941 029 AN	Headlamp	/L	1	I8JE
(1)	95B 941 030 AN	Headlamp	/R	1	I8JE
(1)	95B 941 029 CM	Headlamp	/L	1	I8EF/8Q3/8X1
(1)	95B 941 030 CM	Headlamp	/R	1	I8EF/8Q3/8X1
(1)	95B 941 029 CN	Headlamp	/L	1	I8EE/8Q3/8X1
(1)	95B 941 030 CN	Headlamp	/R	1	I8EE/8Q3/8X1
2	N 107 333 01	Halogen bulb H 15		2	I8BE/8EA/8EE I8EF/8EG/8JE
3	999 631 070 90	Light D3S		2	
4	997 631 267 01	Ventilation component Lower		2	
5	991 631 313 00	Protective cap		2	
6	95B 941 363	Protective cap Rear		2	
7	95B 941 323 B	Gasket	/L	1	
(7)	95B 941 323 C	Gasket	/R	1	
8	991 631 327 02	Electric motor Headlight levelling system		2	
9	7PP 941 329 M	Control unit Power electronics		2	I8BC/8BZ/8JD
9	7PP 941 329 R	Control unit Power electronics	-15	2	I8BE/8EA/8EE I8EF/8EG/8JE
9	7PP 941 329 T	Control unit Power electronics	16-	2	I8BE/8EA/8EE I8EF/8EG/8JE
10	991 618 323 03	Control unit XENON		2	I8BC/8BE/8BZ I8EA/8JD/8JE

Model: 95B **Model life 2014>>**

Pos	Part Number	Description	Remark	Qty	Model
11	999 919 159 09	Oval-head screw 4,0 X 12,0		8	
12	991 631 323 00	Cable Control unit XENON		2	
13	95B 941 057 B	Support Adjustment Headlamp	/L	1	
13	95B 941 058 B	Support Adjustment Headlamp	/R	1	
14	N 101 586 05	Hexagon-head bolt M6 X 20		4	
15	WHT 006 897	Speed nut		8	
16	95B 941 121 A	Retainer plate	/L	1	
16	95B 941 122 A	Retainer plate	/R	1	
17	N 910 702 01	Combination screw M6 X 30		8	
18	N 100 092 09	Hexagon-head bolt M6 X 20		4	
19	95B 955 101	Jet carrier Left Headlamp	/L	1	I8X1
19	95B 955 102	Jet carrier Right Headlamp	/R	1	I8X1
20	7PP 907 357 D	Control unit Headlight levelling system		1	I8BC/8BE/8BZ I8EA/8JD/8JE I8Q3
21	95B 907 366	Support Control unit Headlight levelling system		1	I8BC/8BE/8BZ I8EA/8JD/8JE I8Q3
22	N 907 579 01	Nut		2	
23	95B 941 559 A	Breather hose Left		1	
(23)	95B 941 560 B	Breather hose Right		1	
(23)	95B 941 560 C	Breather hose Right		1	
24	95B 941 741 A	Nozzle Breather hose		2	
25	991 631 323 00	Cable Control unit		2	
28	95B 953 049 A	Direction indicator light	/L	1	
(28)	95B 953 050 A	Direction indicator light	/R	1	
29	95B 941 107 A	Position light	/L	1	
29	95B 941 108 A	Position light	/R	1	
30	95B 998 021	Repair kit Additional headlamp	/L	1	
30	95B 998 022	Repair kit Additional headlamp	/R	1	
31	95B 941 181	Additional headlamp Included Direction indicator light	/L	1	
31	95B 941 182	Additional headlamp Included Direction indicator light	/R	1	
32	N 909 747 01	Oval-head sheetmetal screw		4	

Model: 95B **Model life 2014>>**

Pos	Part Number	Description	Remark	Qty	Model
		5 X 16			
40	955 631 163 00	Fog headlamp		2	I8WB/8WH
41	N 105 297 01	Halogen bulb H 11		2	I8WB/8WH
42	95B 941 699 A	Fog headlamp	/L	1	I8WB/8WH
42	95B 941 700 A	Fog headlamp	/R	1	I8WB/8WH
43	N 909 747 01	Oval-head sheetmetal screw 5 X 16		8	

Illustration: 905-10

PORSCHE

Model: 95B **Model life 2014>>**

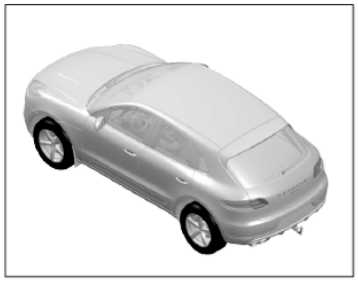

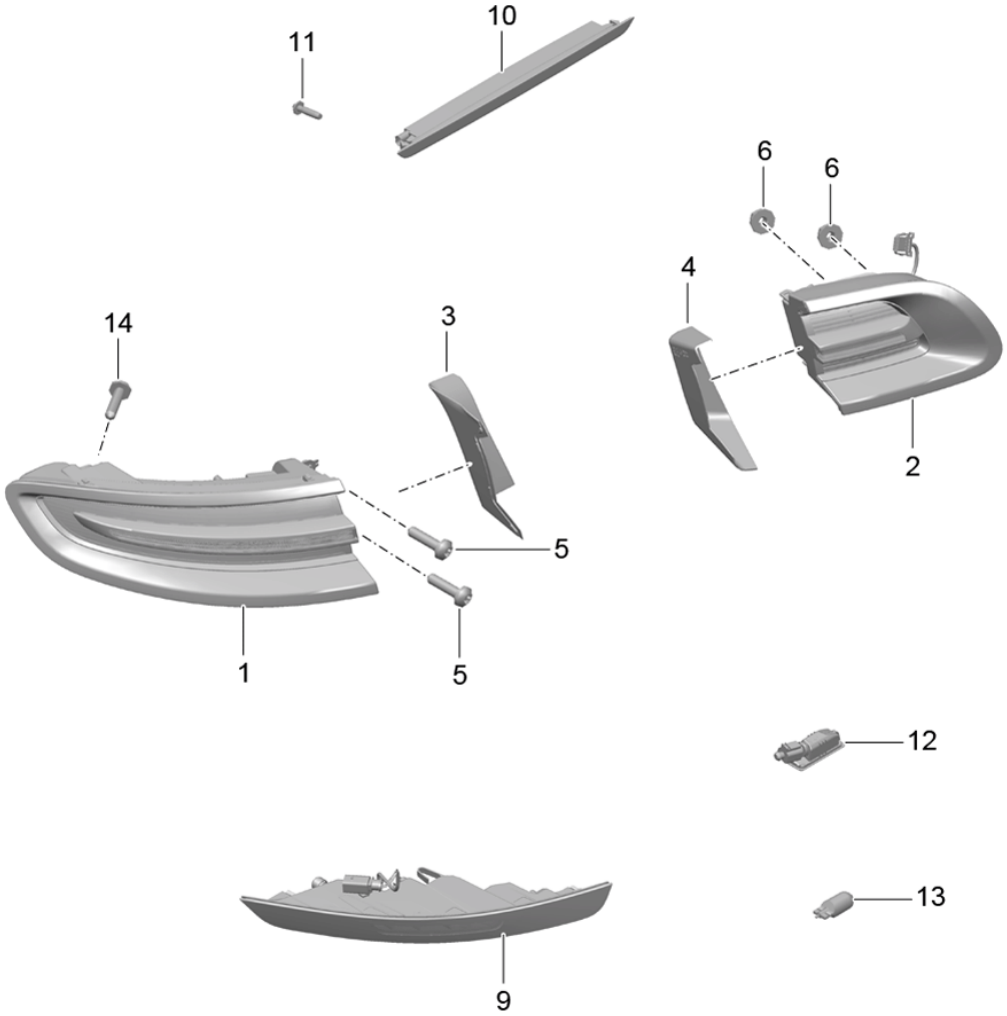

Model: 95B **Model life 2014>>**

Pos	Part Number	Description	Remark	Qty	Model
		Rear light Additional brake light License plate light			
1	95B 945 095 D	Rear light Outer	/L	1	I8SA
1	95B 945 096 D	Rear light Outer	/R	1	I8SA
1	95B 945 095 B	Rear light Outer	/L	1	I8SB
1	95B 945 096 B	Rear light Outer	/R	1	I8SB
2	95B 945 093	Rear light Inner	/L	1	-IB1P/I8SA
2	95B 945 094	Rear light Inner	/R	1	-IB1P/I8SA
2	95B 945 093 B	Rear light Inner	/L	1	I8SB
2	95B 945 094 B	Rear light Inner	/R	1	I8SB
3	95B 945 311 D	Cover Rear light Outer	/L	1	
(3)	95B 945 312 D	Cover Rear light Outer	/R	1	
4	95B 945 425 D	Cover Rear light Inner	/L	1	
(4)	95B 945 426 D	Cover Rear light Inner	/R	1	
5	N 910 717 01	Round head screw M 6 X 25		4	
6	N 015 082 10	Hexagon nut M 6		4	
9	95B 945 725 C	Reflector Back-up light	/LL /L	1	IL0L/8SA
9	95B 945 726 C	Reflector Back-up light	/LL /R	1	-IB1P/IL0L I8SA
9	95B 945 725 E	Reflector Back-up light	/RL /L	1	-IB1P/IL0R I8SA
9	95B 945 726 E	Reflector Back-up light	/RL /R	1	-IB1P/IL0R I8SA
10	95B 945 097	Additional brake light		1	-IB1P
11	N 105 496 03	Oval-head screw 4 X 16		2	
12	958 631 620 00	License plate light		2	I9MA
(12)	420 943 021	License plate light		2	I9MB
13	N 017 753 5	Bulb 5 W		2	
14	N 911 482 01	Round head screw M 6 X 25		2	

Illustration: 906-00

PORSCHE

Model: 95B **Model life 2014>>**

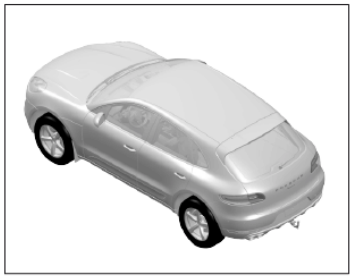

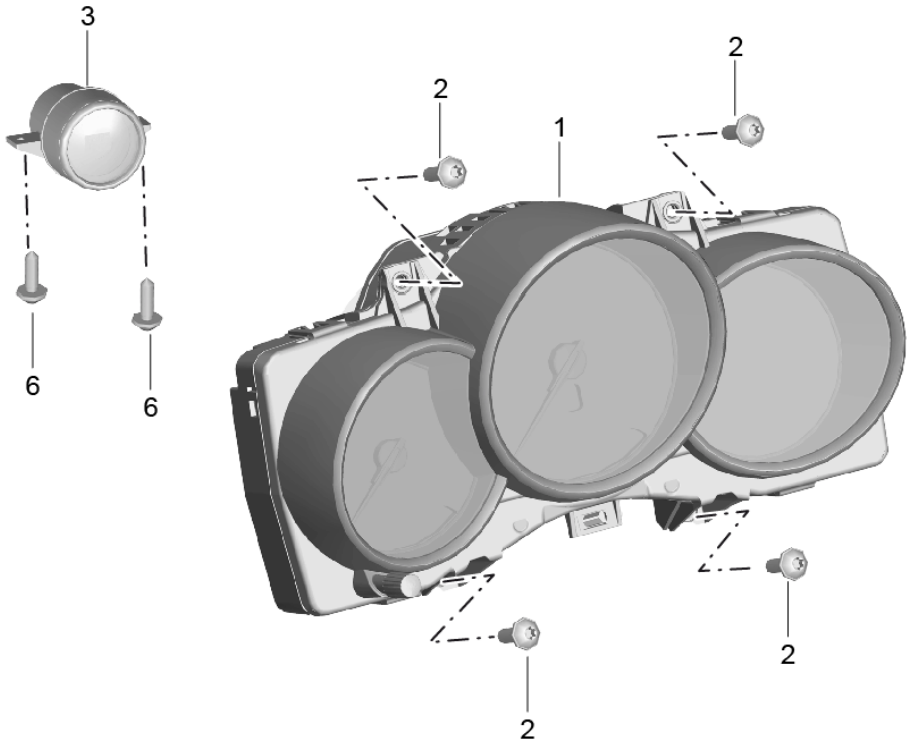

Model: 95B **Model life 2014>>**

Pos	Part Number	Description	Remark	Qty	Model
		Instruments Dial Silver-black Stopwatch	-16		I7V0/7V5/7V6
1	95B 920 900 Q 95B 920 900 Q 6N3	Instrument cluster Black mat		1	IDM0/G1D/7V0
1	95B 920 900 AF 95B 920 900 AF 6N3	Information available Instrument cluster Black mat	15	1	IDM0/G1D/IY2 I7V0
1	95B 920 900 R 95B 920 900 R 6N3	Instrument cluster Black mat		1	IDM0/G1D/U5B
1	95B 920 900 AG 95B 920 900 AG 6N3	Information available Instrument cluster Black mat	15	1	IDM0/G1D/IY2 IU5B
1	95B 920 901 M 95B 920 901 M 6N3	Instrument cluster Black mat		1	IDU0/G1D/7V5
1	95B 920 901 AC 95B 920 901 AC 6N3	Information available Instrument cluster Black mat	15	1	IDU0/G1D/IY2 I7V5
1	95B 920 901 N 95B 920 901 N 6N3	Instrument cluster Black mat		1	IDU0/G1D/U5B I7V5
1	95B 920 901 AD 95B 920 901 AD 6N3	Information available Instrument cluster Black mat	15	1	IDU0/G1D/IY2 IU5B/7V5
1	95B 920 902 M 95B 920 902 M 6N3	Instrument cluster Black mat		1	IDU1/G1D/7V6
1	95B 920 902 AC 95B 920 902 AC 6N3	Information available Instrument cluster Black mat	15	1	IDU1/G1D/IY2 I7V6

Model: 95B **Model life 2014>>**

Pos	Part Number	Description	Remark	Qty	Model
1	95B 920 902 N	Instrument cluster		1	IDU1/G1D/U5B I7V6
	95B 920 902 N 6N3	Black mat			
		Information available			
1	95B 920 902 AD	Instrument cluster	15	1	IDU1/G1D/IY2 IU5B/7V6
	95B 920 902 AD 6N3	Black mat			
1	95B 920 904 T	Instrument cluster		1	IDD7/D1V/D43 ID51/G1D/7V5
	95B 920 904 T 6N3	Black mat			
		Information available			
1	95B 920 904 AJ	Instrument cluster	15	1	IDD7/D43/G1D IIY2/7V5
	95B 920 904 AJ 6N3	Black mat			
1	95B 920 904 AA	Instrument cluster		1	IDD7/D1V/D43 ID51/G1D/U5B I7V5
	95B 920 904 AA 6N3	Black mat			
		Information available			
1	95B 920 904 AK	Instrument cluster	15	1	IDD7/D43/G1D IIY2/U5B/7V5
	95B 920 904 AK 6N3	Black mat			
2	N 910 742 01	Fastening screw		4	
3	958 641 401 04	Compass		1	IQR1/7Q7/7T1 I7T4
(3)	958 641 501 04	Stopwatch		1	IQR4/QR5
6	N 910 742 01	Fastening screw		2	

Illustration: 906-01

PORSCHE

Model: 95B **Model life 2014>>**

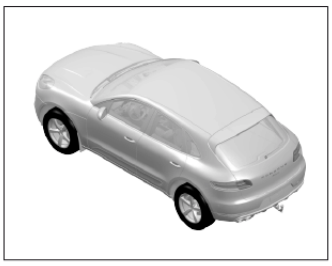

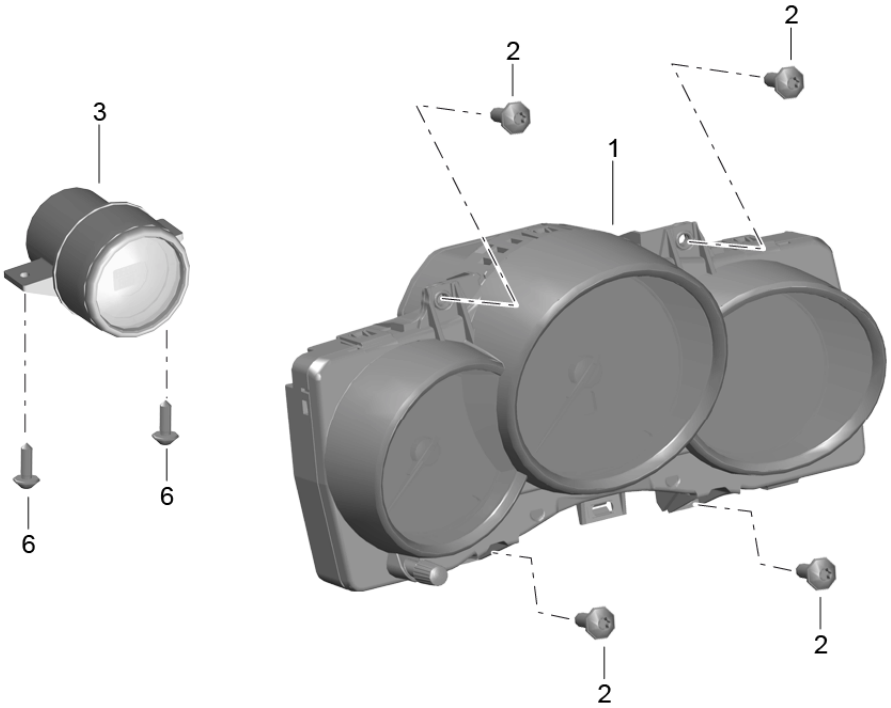

Model: 95B **Model life 2014>>**

Pos	Part Number	Description	Remark	Qty	Model
		Instruments	-16		-I7V0/-I7V5 -I7V6
		Dial Coloured Stopwatch			
1	95B 920 920	Instrument cluster		1	IDM0/G1D/U5A IU5D/U5E/U5F IU5G/7V7
	95B 920 920 OE1	Carrera Red			
1	95B 920 920 A	Instrument cluster		1	IDM0/G1D/U5B I7V7
	95B 920 920 A OE1	Carrera Red			
1	95B 920 921	Instrument cluster		1	IDU0/G1D/U5A IU5D/U5E/U5F IU5G/7V7
	95B 920 921 OE1	Carrera Red			
1	95B 920 921 A	Instrument cluster		1	IDU0/G1D/U5B I7V7
	95B 920 921 A OE1	Carrera Red			
1	95B 920 922	Instrument cluster		1	IDU1/G1D/U5A IU5D/U5E/U5F IU5G/7V7
	95B 920 922 OE1	Carrera Red			
1	95B 920 922 A	Instrument cluster		1	IDU1/G1D/U5B I7V7
	95B 920 922 A OE1	Carrera Red			
1	95B 920 924	Instrument cluster		1	IDD7/D1V/D43 ID50/D51/G1D IU5A/U5D/U5E IU5F
	95B 920 924 OE1	Carrera Red			IU5G/7V7
1	95B 920 924 A	Instrument cluster		1	IDD7/D1V/D43 ID50/D51/G1D IU5B/7V7
	95B 920 924 A OE1	Carrera Red			
1	95B 920 940	Instrument cluster		1	IDM0/G1D/U5A IU5D/U5E/U5F IU5G/7V3
	95B 920 940 C9A	White			
		Information available			
1	95B 920 940 A	Instrument cluster		1	IDM0/G1D/U5B I7V3
	95B 920 940 A C9A	White			

Model: 95B **Model life 2014>>**

Pos	Part Number	Description	Remark	Qty	Model
		Information available			
1	95B 920 941	Instrument cluster		1	IDU0/G1D/U5A IU5D/U5E/U5F IU5G/7V3
	95B 920 941 C9A	White			
		Information available			
1	95B 920 941 A	Instrument cluster		1	IDU0/G1D/U5B I7V3
	95B 920 941 A C9A	White			
		Information available			
1	95B 920 942	Instrument cluster		1	IDU1/G1D/U5A IU5D/U5E/U5F IU5G/7V3
	95B 920 942 C9A	White			
		Information available			
1	95B 920 942 A	Instrument cluster		1	IDU1/G1D/U5B I7V7
	95B 920 942 A C9A	White			
		Information available			
1	95B 920 944	Instrument cluster		1	IDD7/D1V/D43 ID50/D51/G1D IU5A/U5D/U5E IU5F
	95B 920 944 C9A	White			IU5G/7V3
		Information available			
1	95B 920 944 A	Instrument cluster		1	IDD7/D1V/D43 ID50/D51/G1D IU5B/7V3
	95B 920 944 A C9A	White			
		Information available			
1	95B 920 960	Instrument cluster		1	IDM0/G1D/U5A IU5D/U5E/U5F IU5G/7V4
	95B 920 960 6W0	Luxor Beige			
		Information available			
1	95B 920 960 A	Instrument cluster		1	IDM0/G1D/U5B I7V4
	95B 920 960 A 6W0	Luxor Beige			
		Information available			
1	95B 920 961	Instrument cluster		1	IDU0/G1D/U5A IU5D/U5E/U5F IU5G/7V4
	95B 920 961 6W0	Luxor Beige			
		Information available			
1	95B 920 961 A	Instrument cluster		1	IDU0/G1D/U5B

Model: 95B **Model life 2014>>**

Pos	Part Number	Description	Remark	Qty	Model
					I7V4
	95B 920 961 A 6W0	Luxor Beige			
		Information available			
1	95B 920 962	Instrument cluster		1	IDU1/G1D/U5A IU5D/U5E/U5F IU5G/7V4
	95B 920 962 6W0	Luxor Beige			
		Information available			
1	95B 920 962 A	Instrument cluster		1	IDU1/G1D/U5B I7V4
	95B 920 962 A 6W0	Luxor Beige			
		Information available			
1	95B 920 964	Instrument cluster		1	IDD7/D1V/D43 ID50/D51/G1D IU5A/U5D/U5E IU5F
	95B 920 964 6W0	Luxor Beige			IU5G/7V4
		Information available			
1	95B 920 964 A	Instrument cluster		1	IDD7/D1V/D43 ID50/D51/G1D IU5B/7V4
	95B 920 964 A 6W0	Luxor Beige			
		Information available			
1	95B 920 964 D	Instrument cluster	16-	1	IDD7/D1V/D43 ID50/D51/G1D IU5B/7V4
	95B 920 964 D 6W0	Luxor Beige			
2	N 910 742 01	Fastening screw		4	
3	7P5 919 107 L	Compass		1	Granatrot IQR1/UP5
		GRANATROT			
(3)	7P5 919 107 M	Compass		1	IQR1/UP4
		Luxor Beige			
(3)	7P5 919 107 N	Compass		1	IQR1/UP3
		White			
(3)	7P5 919 203 G	Stopwatch		1	IQR4/QR5/UP5
		GRANATROT			
(3)	7P5 919 203 H	Stopwatch		1	IQR4/QR5/UP4
		Luxor Beige			
(3)	7P5 919 203 J	Stopwatch		1	IQR4/QR5/UP3
		White			
6	N 910 742 01	Fastening screw		2	

Illustration: 906-02

PORSCHE

Model: 95B **Model life 2014>>**

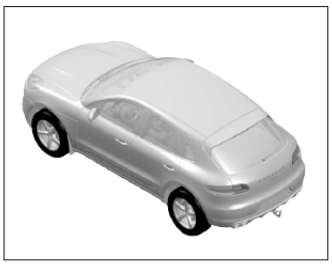

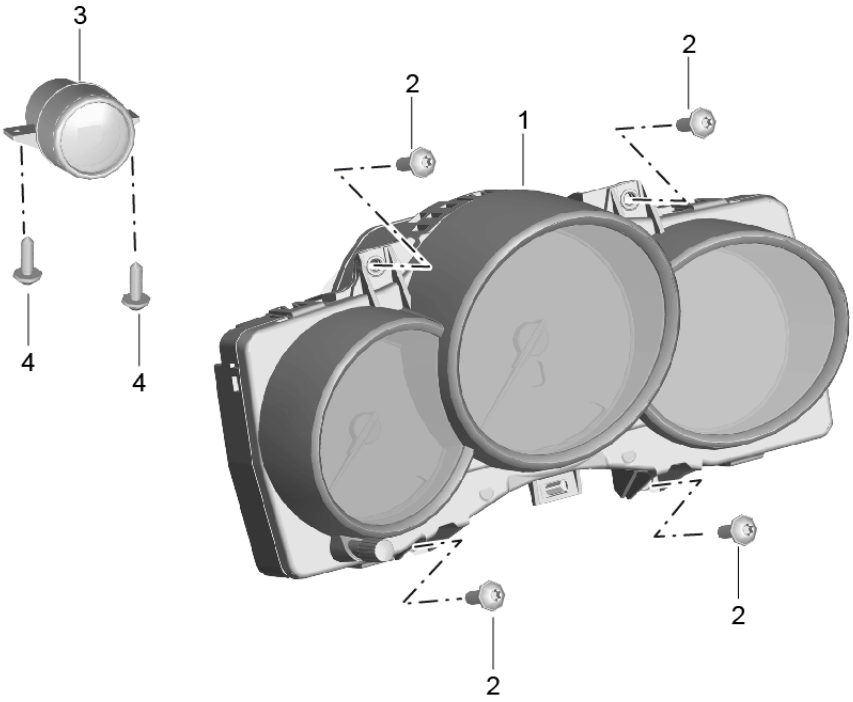

Illustration: 906-02

Model: 95B **Model life 2014>>**

Pos	Part Number	Description	Remark	Qty	Model
		Instruments Dial Silver-black Stopwatch	17-		I7V0/7V5/7V6
1	95B 920 900 EF	Instrument cluster		1	ITW6/U5A/U5E IU5F/U5G/7V0
	95B 920 900 EF 6N3	Black			
(1)	95B 920 900 EG	Instrument cluster		1	ITW6/U5B/7V0
	95B 920 900 EG 6N3	Black			
(1)	95B 920 901 EF	Instrument cluster		1	IDU0/U5A/U5E IU5F/U5G/7V5
	95B 920 901 EF 6N3	Grey/black			
(1)	95B 920 901 EG	Instrument cluster		1	IDU0/U5B/7V5
	95B 920 901 EG 6N3	Grey/black			
(1)	95B 920 902 EF	Instrument cluster		1	IDU1/U5A/U5E IU5F/U5G/7V6
	95B 920 902 EF 6N3	Black/Silver			
(1)	95B 920 902 EG	Instrument cluster		1	IDU1/U5B/7V6
	95B 920 902 EG 6N3	Black/Silver			
(1)	95B 920 904 EF	Instrument cluster		1	IDD7/D1V/D43 ID50/U5A/U5E IU5F/U5G/7V5
	95B 920 904 EF 6N3	Grey/black			
(1)	95B 920 904 EG	Instrument cluster		1	IDD7/D1V/D43 ID50/U5B/7V5
	95B 920 904 EG 6N3	Grey/black			
(1)	95B 920 911 DQ	Instrument cluster		1	ID4A/U5A/U5E IU5F/U5G/7V0
	95B 920 911 DQ 6N3	Black			
(1)	95B 920 911 DR	Instrument cluster		1	ID4A/U5B/7V0
	95B 920 911 DR 6N3	Black			
(1)	95B 920 911 DT	Instrument cluster		1	ID4A/U5A/U5E IU5F/U5G/7V5
	95B 920 911 DT 6N3	Grey/black			
(1)	95B 920 911 EA	Instrument cluster		1	ID4A/U5B/7V5
	95B 920 911 EA 6N3	Grey/black			
2	N 910 742 01	Fastening screw		4	
3	958 641 401 05	Compass		1	IQR1/UP1
(3)	958 641 501 07	Stopwatch		1	IQR5/UP1
4	N 910 742 01	Fastening screw		2	

Illustration: 906-03

PORSCHE

Model: 95B **Model life 2014>>**

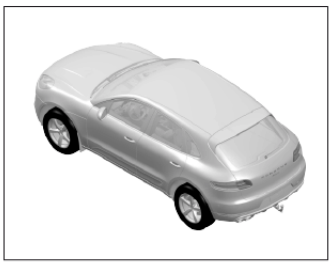

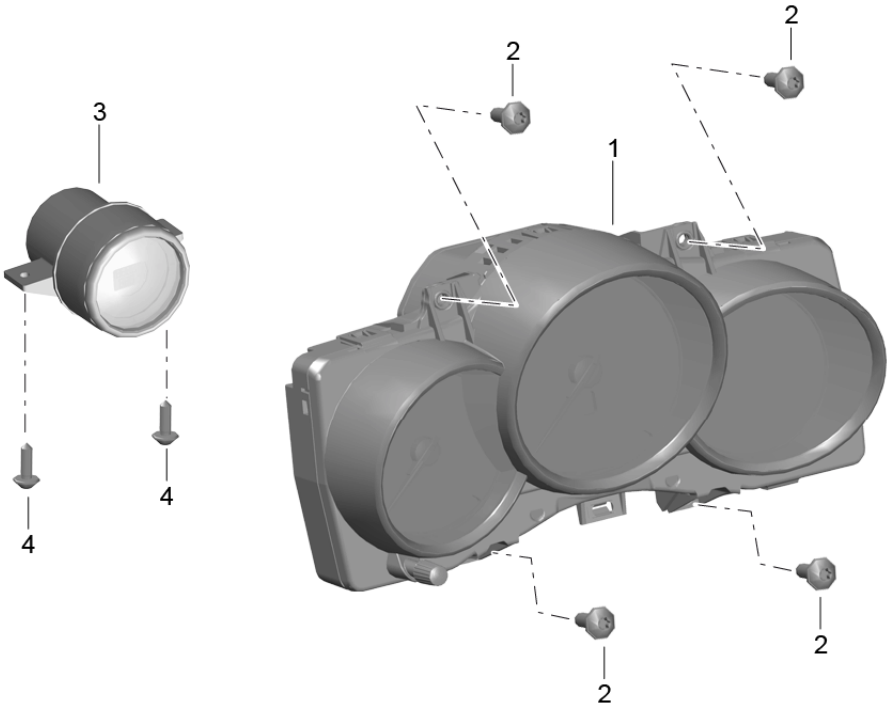

Model: 95B **Model life 2014>>**

Pos	Part Number	Description	Remark	Qty	Model
		Instruments	17-		I7V3/7V4/7V7 I7V8
		Dial Coloured Stopwatch			
1	95B 920 920 M	Instrument cluster		1	ITW6/U5A/U5E IU5F/U5G/7V7
	95B 920 920 M OE1	Carrera Red			
(1)	95B 920 920 N	Instrument cluster		1	ITW6/U5B/7V7
	95B 920 920 N OE1	Carrera Red			
(1)	95B 920 921 M	Instrument cluster		1	IDU0/U5A/U5E IU5F/U5G/7V7
	95B 920 921 M OE1	Carrera Red			
(1)	95B 920 921 N	Instrument cluster		1	IDU0/U5B/7V7
	95B 920 921 N OE1	Carrera Red			
(1)	95B 920 922 M	Instrument cluster		1	IDU1/U5A/U5E IU5F/U5G/7V7
	95B 920 922 M OE1	Carrera Red			
(1)	95B 920 922 N	Instrument cluster		1	IDU1/U5B/7V7
	95B 920 922 N OE1	Carrera Red			
(1)	95B 920 924 M	Instrument cluster		1	IDD7/D1V/D43 ID50/U5A/U5E IU5F/U5G/7V7
	95B 920 924 M OE1	Carrera Red			
(1)	95B 920 924 N	Instrument cluster		1	IDD7/D1V/D43 ID50/U5B/7V7
	95B 920 924 N OE1	Carrera Red			
(1)	95B 920 931 M	Instrument cluster		1	ID4A/U5A/U5E IU5F/U5G/7V7
	95B 920 931 M OE1	Carrera Red			
(1)	95B 920 931 N	Instrument cluster		1	ID4A/U5B/7V7
	95B 920 931 N OE1	Carrera Red			
1	95B 920 940 M	Instrument cluster		1	ITW6/U5A/U5E IU5F/U5G/7V3
	95B 920 940 M C9A	White			
(1)	95B 920 940 N	Instrument cluster		1	ITW6/U5B/7V3
	95B 920 940 N C9A	White			
(1)	95B 920 941 M	Instrument cluster		1	IDU0/U5A/U5E IU5F/U5G/7V3
	95B 920 941 M C9A	White			
(1)	95B 920 941 N	Instrument cluster		1	IDU0/U5B/7V3
	95B 920 941 N C9A	White			
(1)	95B 920 942 M	Instrument cluster		1	IDU1/U5A/U5E IU5F/U5G/7V3
	95B 920 942 M C9A	White			
(1)	95B 920 942 N	Instrument cluster		1	IDU1/U5B/7V3
	95B 920 942 N C9A	White			

Model: 95B **Model life 2014>>**

Pos	Part Number	Description	Remark	Qty	Model
(1)	95B 920 944 M	Instrument cluster		1	IDD7/D1V/D43 ID50/U5A/U5E IU5F/U5G/7V3
	95B 920 944 M C9A	White			
(1)	95B 920 944 N	Instrument cluster		1	IDD7/D1V/D43 ID50/U5B/7V3
	95B 920 944 N C9A	White			
(1)	95B 920 951 M	Instrument cluster		1	ID4A/U5A/U5E IU5F/U5G/7V3
	95B 920 951 M C9A	White			
(1)	95B 920 951 N	Instrument cluster		1	ID4A/U5B/7V3
	95B 920 951 N C9A	White			
1	95B 920 960 M	Instrument cluster		1	ITW6/U5A/U5E IU5F/U5G/7V4
	95B 920 960 M 6W0	Luxor Beige			
(1)	95B 920 960 N	Instrument cluster		1	ITW6/U5B/7V4
	95B 920 960 N 6W0	Luxor Beige			
(1)	95B 920 961 M	Instrument cluster		1	IDU0/U5A/U5E IU5F/U5G/7V4
	95B 920 961 M 6W0	Luxor Beige			
(1)	95B 920 961 N	Instrument cluster		1	IDU0/U5B/7V4
	95B 920 961 N 6W0	Luxor Beige			
(1)	95B 920 962 M	Instrument cluster		1	IDU1/U5A/U5E IU5F/U5G/7V4
	95B 920 962 M 6W0	Luxor Beige			
(1)	95B 920 962 N	Instrument cluster		1	IDU1/U5B/7V4
	95B 920 962 N 6W0	Luxor Beige			
(1)	95B 920 964 M	Instrument cluster		1	IDD7/D1V/D43 ID50/U5A/U5E IU5F/U5G/7V4
	95B 920 964 M 6W0	Luxor Beige			
(1)	95B 920 964 N	Instrument cluster		1	IDD7/D1V/D43 ID50/U5B/7V4
	95B 920 964 N 6W0	Luxor Beige			
(1)	95B 920 971 M	Instrument cluster		1	ID4A/U5A/U5E IU5F/U5G/7V4
	95B 920 971 M 6W0	Luxor Beige			
(1)	95B 920 971 N	Instrument cluster		1	ID4A/U5B/7V4
	95B 920 971 N 6W0	Luxor Beige			
(1)	95B 920 911 EC	Instrument cluster		1	ID4A/U5A/U5E IU5F/U5G/7V8
	95B 920 911 EC M3C	Carmine red			
(1)	95B 920 911 ED	Instrument cluster		1	ID4A/U5B/7V8
	95B 920 911 ED M3C	Carmine red			
2	N 910 742 01	Fastening screw		4	
3	9A7 919 107 20	Compass		1	IQR1/UP5

Model: 95B **Model life 2014>>**

Pos	Part Number	Description	Remark	Qty	Model
		Carrera Red			
(3)	9A7 919 107 21	Compass		1	IQR1/UP3
		White			
(3)	9A7 919 107 22	Compass		1	IQR1/UP4
		Luxor Beige			
(3)	9A7 919 203 13	Stopwatch		1	IQR5/UP5
		Carrera Red			
(3)	9A7 919 203 16	Stopwatch		1	IQR5/UP3
		White			
(3)	9A7 919 203 14	Stopwatch		1	IQR5/UP4
		Luxor Beige			
4	N 910 742 01	Fastening screw		2	

Illustration: 911-00

Model: 95B **Model life 2014>>**

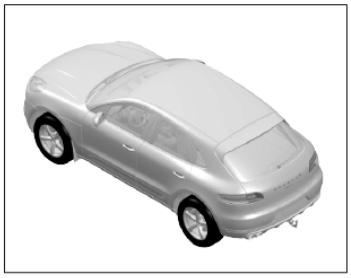

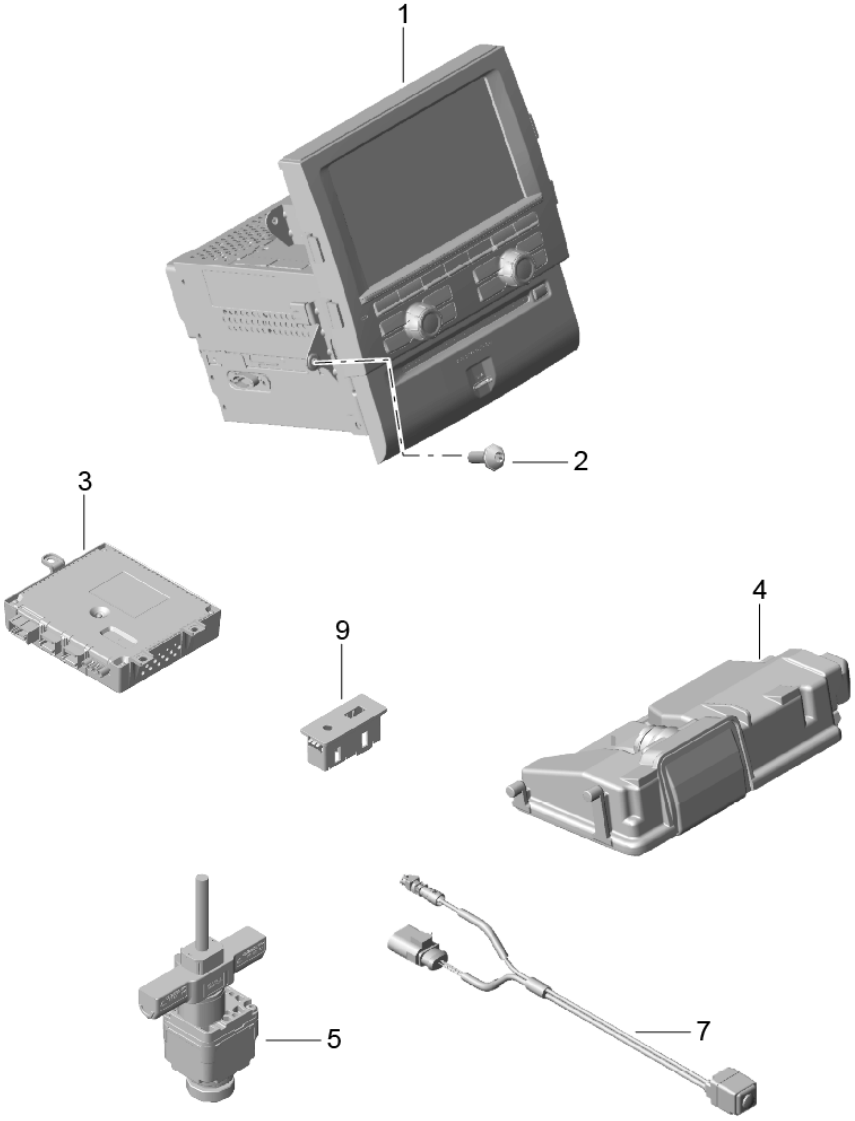

Model: 95B **Model life 2014>>**

Pos	Part Number	Description	Remark	Qty	Model
		Control part Navigation system Radio Receiving part TV Microphone Camera Control part Only in exchange	-16		
1	95B 035 970 AX	Control part We take back: 95B.035.970.01	-14	1	IQV0/QV1/7A0 I7T1
(1)	95B 035 970 BX	Control part We take back: 95B.035.970.02	15	1	-IIY2/IQV0 IQV1/7A0/7T1
(1)	95B 035 970 CX	Control part We take back: 95B.035.970.03	15	1	IIY2/QV0/QV1 I7A0/7T1
(1)	95B 035 970 DX	Control part We take back: 95B.035.970.04	16-	1	IQV0/QV1/7A0 I7T1
(1)	95B 035 961 AX	Control part We take back: 95B.035.961.01	-14	1	IQV4/7A0/7T1
(1)	95B 035 961 BX	Control part We take back: 95B.035.961.02	15	1	-IIY2/IQV4 I7A0/7T1
(1)	95B 035 961 CX	Control part We take back: 95B.035.961.03	15	1	IIY2/QV4/7A0 I7T1
(1)	95B 035 961 DX	Control part We take back: 95B.035.961.04	16-	1	IQV4/7A0/7T1
(1)	95B 035 962 AX	Control part We take back: 95B.035.962.01	-14	1	IQV3/7A0/7T1
(1)	95B 035 962 BX	Control part We take back: 95B.035.962.02	15	1	-IIY2/IQV3 I7A0/7T1
(1)	95B 035 962 CX	Control part We take back: 95B.035.962.03	15	1	IIY2/QV3/7A0 I7T1
(1)	95B 035 962 DX	Control part We take back: 95B.035.962.04	16-	1	IQV3/7A0/7T1
(1)	95B 035 963 AX	Control part We take back: 95B.035.963.01	-14	1	IQV8/7A0/7T1
(1)	95B 035 963 BX	Control part We take back: 95B.035.963.02	15	1	-IIY2/IQV8 I7A0/7T1
(1)	95B 035 963 CX	Control part We take back:	15	1	IIY2/QV8/7A0 I7T1

Model: 95B **Model life 2014>>**

Pos	Part Number	Description	Remark	Qty	Model
		95B.035.963.03			
(1)	95B 035 963 DX	Control part	16-	1	IQV8/7A0/7T1
		We take back:			
		95B.035.963.04			
(1)	95B 035 950 AX	Control part	-14	1	IQU0/QV5/7A0 I7T1
		We take back:			
		95B.035.950.01			
(1)	95B 035 950 BX	Control part	15	1	-IIY2/IQU0 IQV5/7A0/7T1
		We take back:			
		95B.035.950.02			
(1)	95B 035 950 CX	Control part	15	1	IIY2/QU0/QV5 I7A0/7T1
		We take back:			
		95B.035.950.03			
(1)	95B 035 950 DX	Control part	16-	1	IQU0/QV5/7A0 I7T1
		We take back:			
		95B.035.950.04			
(1)	95B 035 972 AX	Control part	-14	1	IQV0/QV1/7D7 I7T1
		We take back:			
		95B.035.972.01			
(1)	95B 035 972 BX	Control part	15	1	-IIY2/IQV0 IQV1/7D7/7T1
		We take back:			
		95B.035.972.02			
(1)	95B 035 972 CX	Control part	15	1	IIY2/QV0/QV1 I7D7/7T1
		We take back:			
		95B.035.972.03			
(1)	95B 035 972 DX	Control part	16-	1	IQV0/QV1/7D7 I7T1
		We take back:			
		95B.035.972.04			
(1)	95B 035 951 AX	Control part	-14	1	IQU0/QV5/7D7 I7T1
		We take back:			
		95B.035.951.01			
(1)	95B 035 951 BX	Control part	15	1	-IIY2/IQU0 IQV5/7D7/7T1
		We take back:			
		95B.035.951.02			
(1)	95B 035 951 CX	Control part	15	1	IIY2/QU0/QV5 I7D7/7T1
		We take back:			
		95B.035.951.03			
(1)	95B 035 951 DX	Control part	16-	1	IQU0/QV5/7D7 I7T1
		We take back:			
		95B.035.951.04			
(1)	95B 035 974 AX	Control part	-14	1	IQV0/QV1/7A0 I7T4
		We take back:			
		95B.035.974.01			
(1)	95B 035 974 BX	Control part	15	1	-IIY2/IQV0 IQV1/7A0/7T4
		We take back:			
		95B.035.974.02			
(1)	95B 035 974 CX	Control part	15	1	IIY2/QV0/QV1 I7A0/7T4
		We take back:			

Model: 95B **Model life 2014>>**

Pos	Part Number	Description	Remark	Qty	Model
		95B.035.974.03			
(1)	95B 035 974 DX	Control part	16-	1	IQV0/QV1/7A0 I7T4
		We take back: 95B.035.974.04			
(1)	95B 035 975 AX	Control part	-14	1	IQV0/QV1/7D7 I7T4
		We take back: 95B.035.975.01			
(1)	95B 035 975 BX	Control part	15	1	-IIY2/IQV0 IQV1/7D7/7T4
		We take back: 95B.035.975.02			
(1)	95B 035 975 CX	Control part	15	1	IIY2/QV0/QV1 I7D7/7T4
		We take back: 95B.035.975.03			
(1)	95B 035 975 DX	Control part	16-	1	IQV0/QV1/7D7 I7T4
		We take back: 95B.035.975.04			
(1)	95B 035 976 AX	Control part	-14	1	IQV0/QV1/7A0 I7Q7
		We take back: 95B.035.976.01			
(1)	95B 035 976 BX	Control part	15	1	-IIY2/IQV0 IQV1/7A0/7Q7
		We take back: 95B.035.976.02			
(1)	95B 035 976 CX	Control part	15	1	IIY2/QV0/QV1 I7A0/7Q7
		We take back: 95B.035.976.03			
(1)	95B 035 976 DX	Control part	16-	1	IQV0/QV1/7A0 I7Q7
		We take back: 95B.035.976.04			
(1)	95B 035 977 AX	Control part	-14	1	IQV0/QV1/7D7 I7Q7
		We take back: 95B.035.977.01			
(1)	95B 035 977 BX	Control part	15	1	-IIY2/IQV0 IQV1/7D7/7Q7
		We take back: 95B.035.977.02			
(1)	95B 035 977 CX	Control part	15	1	IIY2/QV0/QV1 I7D7/7Q7
		We take back: 95B.035.977.03			
(1)	95B 035 977 DX	Control part	16-	1	IQV0/QV1/7D7 I7Q7
		We take back: 95B.035.977.04			
(1)	95B 035 956 AX	Control part	-14	1	IQV0/QV1/7A0 I7Q0/8DQ/8DV
		We take back: 95B.035.956.01			
(1)	95B 035 956 BX	Control part	15	1	-IIY2/IQV0 IQV1/7A0/7Q0 I8DQ/8DV
		We take back: 95B.035.956.02			
(1)	95B 035 956 CX	Control part	15	1	IIY2/QV0/QV1

Model: 95B **Model life 2014>>**

Pos	Part Number	Description	Remark	Qty	Model
					I7A0/7Q0/8DQ I8DV
(1)	95B 035 956 DX	We take back: 95B.035.956.03 Control part	16-	1	IQV0/QV1/7A0 I7Q0/8DQ/8DV
(1)	95B 035 957 AX	We take back: 95B.035.956.04 Control part	-14	1	IQU0/QV0/QV1 I7D7/7Q0/8DQ I8DV
(1)	95B 035 957 BX	We take back: 95B.035.957.01 Control part	15	1	-IIY2/IQU0 IQV0/QV1/7D7 I7Q0/8DQ/8DV
(1)	95B 035 957 CX	We take back: 95B.035.957.02 Control part	15	1	IIY2/QU0/QV0 IQV1/7D7/7Q0 I8DQ/8DV
(1)	95B 035 957 DX	We take back: 95B.035.957.03 Control part	16-	1	IQU0/QV0/QV1 I7D7/7Q0/8DQ I8DV
(1)	95B 035 952 AX	We take back: 95B.035.957.04 Control part	-14	1	IQU0/QV5/7A0 I7Q0/8DQ/8DV
(1)	95B 035 952 BX	We take back: 95B.035.952.01 Control part	15	1	-IIY2/IQU0 IQV5/7A0/7Q0 I8DQ/8DV
(1)	95B 035 952 CX	We take back: 95B.035.952.02 Control part	15	1	IIY2/QU0/QV5 I7A0/7Q0/8DQ I8DV
(1)	95B 035 952 DX	We take back: 95B.035.952.03 Control part	16-	1	IQU0/QV5/7A0 I7Q0/8DQ/8DV
(1)	95B 035 953 AX	We take back: 95B.035.952.04 Control part	-14	1	IQU0/QV5/7D7 I7Q0/8DQ/8DV
(1)	95B 035 953 BX	We take back: 95B.035.953.01 Control part	15	1	-IIY2/IQU0 IQV5/7D7/7Q0 I8DQ/8DV

Model: 95B **Model life 2014>>**

Pos	Part Number	Description	Remark	Qty	Model
(1)	95B 035 953 CX	We take back: 95B.035.953.02 Control part	15	1	IIY2/QU0/QV5 I7D7/7Q0/8DQ I8DV
(1)	95B 035 953 DX	We take back: 95B.035.953.03 Control part	16-	1	IQU0/QV5/7D7 I7Q0/8DQ/8DV
(1)	95B 035 954 AX	We take back: 95B.035.953.04 Control part	-14	1	IQV4/QV8/7A0 I7Q0/8DQ/8DV
(1)	95B 035 954 BX	We take back: 95B.035.954.01 Control part	15	1	-IIY2/IQV4 IQV8/7A0/7Q0 I8DQ/8DV
(1)	95B 035 954 CX	We take back: 95B.035.954.02 Control part	15	1	IIY2/QV4/QV8 I7A0/7Q0/8DQ I8DV
(1)	95B 035 954 DX	We take back: 95B.035.954.03 Control part	16-	1	IQV4/QV8/7A0 I7Q0/8DQ/8DV
(1)	95B 035 955 AX	We take back: 95B.035.954.04 Control part	-14	1	IQV8/7D7/7Q0 I8DQ/8DV
(1)	95B 035 955 BX	We take back: 95B.035.955.01 Control part	15	1	-IIY2/IQV8 I7D7/7Q0/8DQ I8DV
(1)	95B 035 955 CX	We take back: 95B.035.955.02 Control part	15	1	IIY2/QV8/7D7 I7Q0/8DQ/8DV
(1)	95B 035 955 DX	We take back: 95B.035.955.03 Control part	16-	1	IQV8/7D7/7Q0 I8DQ/8DV
		We take back: 95B.035.955.04			
2	N 910 742 01	Fastening screw M5X16		2	Macan
-	7PP 919 855	CD-ROM		1	Macan

Model: 95B **Model life 2014>>**

Pos	Part Number	Description	Remark	Qty	Model
					I9NY
		Logbook			
-	997 642 271 56	DVD Navigation system for Software 7PP.919.193.CB	14	1	I7RT
-	997 642 271 57	DVD Navigation system for Software 7PP.919.193.CL	15-	1	I7RT
-	997 642 271 58	DVD Navigation system for Software 7PP.919.193.DD	16-	1	I7RT
-	997 642 271 59	DVD Navigation system for Software 7PP.919.193.DP	16-	1	I7RT
-	997 642 275 56	DVD Navigation system for Software 7PP.919.193.CD	14	1	I7RX
-	997 642 275 57	DVD Navigation system for Software 7PP.919.193.CN	15-	1	I7RX
-	997 642 275 58	DVD Navigation system for Software 7PP.919.193.DF	16-	1	I7RX
-	991 642 287 52	DVD Navigation system for Software 7PP.919.193.CF	14	1	I7RH
-	991 642 287 57	DVD Navigation system for Software 7PP.919.193.CQ	15-	1	I7RH
-	991 642 287 58	DVD Navigation system for Software 7PP.919.193.DG	16-	1	I7RH
-	997 642 279 56	DVD Navigation system for Software 7PP.919.193.CG	14	1	I7RJ
-	997 642 279 57	DVD Navigation system for Software 7PP.919.193.CR	15-	1	I7RJ
-	997 642 279 58	DVD	16-	1	I7RJ

Model: 95B **Model life 2014>>**

Pos	Part Number	Description	Remark	Qty	Model
-	997 642 281 56	Navigation system for Software 7PP.919.193.DH DVD	14	1	I7RM
-	997 642 281 57	Navigation system for Software 7PP.919.193.CH DVD	15-	1	I7RM
-	997 642 281 58	Navigation system for Software 7PP.919.193.CS DVD	16-	1	I7RM
-	997 642 283 56	Navigation system for Software 7PP.919.193.DJ DVD	14	1	I7RV
-	997 642 283 57	Navigation system for Software 7PP.919.193.CJ DVD	15-	1	I7RV
-	997 642 283 58	Navigation system for Software 7PP.919.193.CT DVD	16-	1	I7RV
-	970 642 285 55	Navigation system for Software 7PP.919.193.DK DVD	14	1	I7RG
-	970 642 285 57	Navigation system for Software 7PP.919.193.CK DVD	15-	1	I7RG
-	970 642 285 58	Navigation system for Software 7PP.919.193.DA DVD	16-	1	I7RG
-	991 642 288 56	Navigation system for Software 7PP.919.193.DL DVD	14	1	I77J
-	991 642 288 57	Navigation system for Software 7PP.919.193.BE DVD	15-	1	I77J
-	991 642 288 58	Navigation system for Software 7PP.919.193.DB DVD	16-	1	I77J

Model: 95B **Model life 2014>>**

Pos	Part Number	Description	Remark	Qty	Model
		7PP.919.193.DM			
-	991 642 289 56	DVD Navigation system for Software	14	1	I77K
		7PP.919.193.BF			
-	991 642 289 57	DVD Navigation system for Software	15-	1	I77K
		7PP.919.193.DC			
-	991 642 289 58	DVD Navigation system for Software	16-	1	I77K
		7PP.919.193.DN			
3	7PP 919 148 H	Receiving part TV		1	IQV1/QV5
-	N 907 371 07	Fastening screw M6X16		3	IQV1/QV5
(4)	7PP 980 653 C	Camera Front		1	I8G1/8G2/9Q1 I9Q6
5	5Q0 980 546 A	Camera TOP VIEW		4	I8A4
7	95B 980 551 F	Reversing camera		1	I7X8/7X9
9	7PP 035 724 D	Plug socket Multimedia interface Glove compartment		1	IUF1/8DQ/8DV I8YZ

Illustration: 911-01

PORSCHE

Model: 95B **Model life 2014>>**

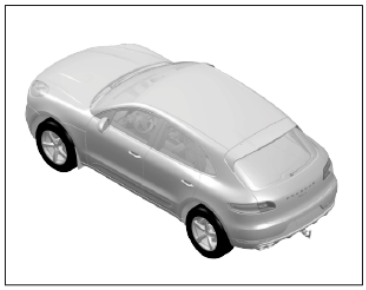

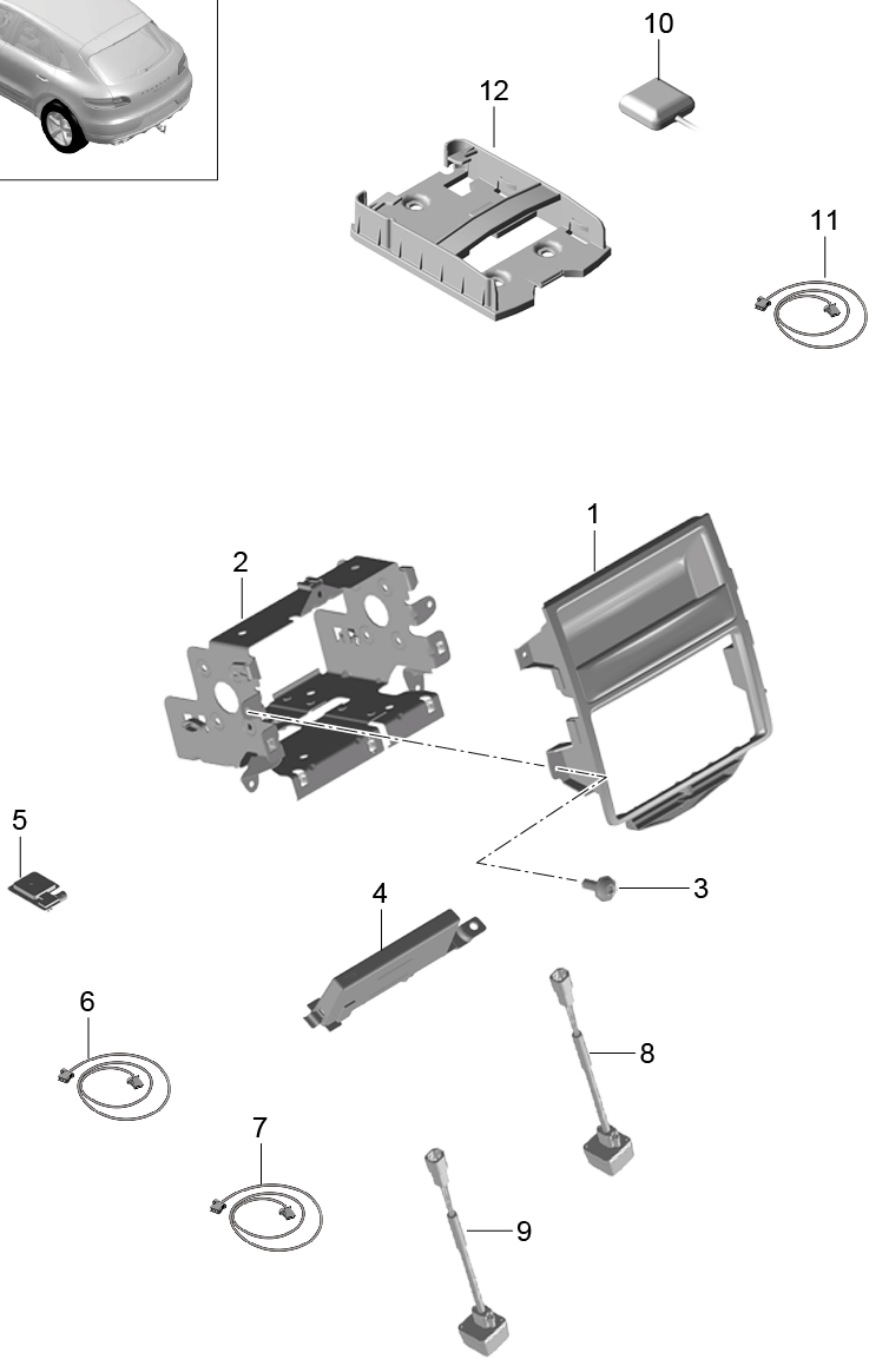

Model: 95B **Model life 2014>>**

Pos	Part Number	Description	Remark	Qty	Model
		Navigation system Preparation Japan	-16		
1	95B 035 421 A	Cover NAVIGATION		1	I7Q4
2	95B 035 547	Support Cover Navigation		1	I7Q4
3	N 910 742 01	Fastening screw		6	
4	95B 035 225 C	Antenna booster		1	I7Q4
5	7PP 035 504 A	Antenna		1	I7Q4/7Q7/7T1 I7T4
6	95B 035 550 AB	Connecting line Antenna		1	I7Q4
(6)	95B 035 550 AA	Connecting line Antenna		1	I7Q4
(6)	95B 035 550 AK	Connecting line Antenna TV		1	I7Q4
(6)	95B 035 550 F	Connecting line Antenna PCM Rear end		1	IL0L/7Q4
(6)	95B 035 550 AD	Connecting line Antenna Side window		1	IL0L/7Q4
7	95B 971 298 Q	Wiring harness Camera Interior mirror		1	IL0R/5SU
(7)	95B 971 298 P	Wiring harness PCM TV		1	IL0R/QV1/QV5
(7)	95B 971 298 AC	Wiring harness Rear Seat Entertainment		1	I9WM
(7)	95B 971 298 T	Wiring harness RTV PSM		1	IL0R/QU0/QV0 IQV3/7Q0/7Q7 I7T1/7T4/8A4
(7)	95B 971 298 AA	Wiring harness RTV		1	LL I7Q4/8A4 RL
(7)	95B 971 298 S	Wiring harness RTV		1	IQV1/QV5/7Q0 I7Q7/7T1/7T4 I8A4
(7)	95B 971 298 G	Wiring harness Interior mirror		1	IL0L/5RP
(7)	95B 971 298 H	Wiring harness PCM		1	LL I7Q4 RL

Model: 95B **Model life 2014>>**

Pos	Part Number	Description	Remark	Qty	Model
		Microphone Roof			
(7)	95B 971 298 L	Wiring harness Camera Door		1	I5RP/5SU
(7)	95B 971 298 F	Wiring harness PCM Rear end		1	I7Q4
8	958 645 291 00	Camera Mirror housing		1	LL IL0R/5SU
9		Camera Mirror housing		1	RL IL0L/5RP
10	5C5 919 853	Antenna DRSC		1	I7Q4
11	5C5 035 320 D	Connecting line DRSC Card reader		1	IL0L/7Q4
12	7PP 919 669 B	Support Card reader		1	I7Q4

Illustration: 911-02

PORSCHE

Model: 95B **Model life 2014>>**

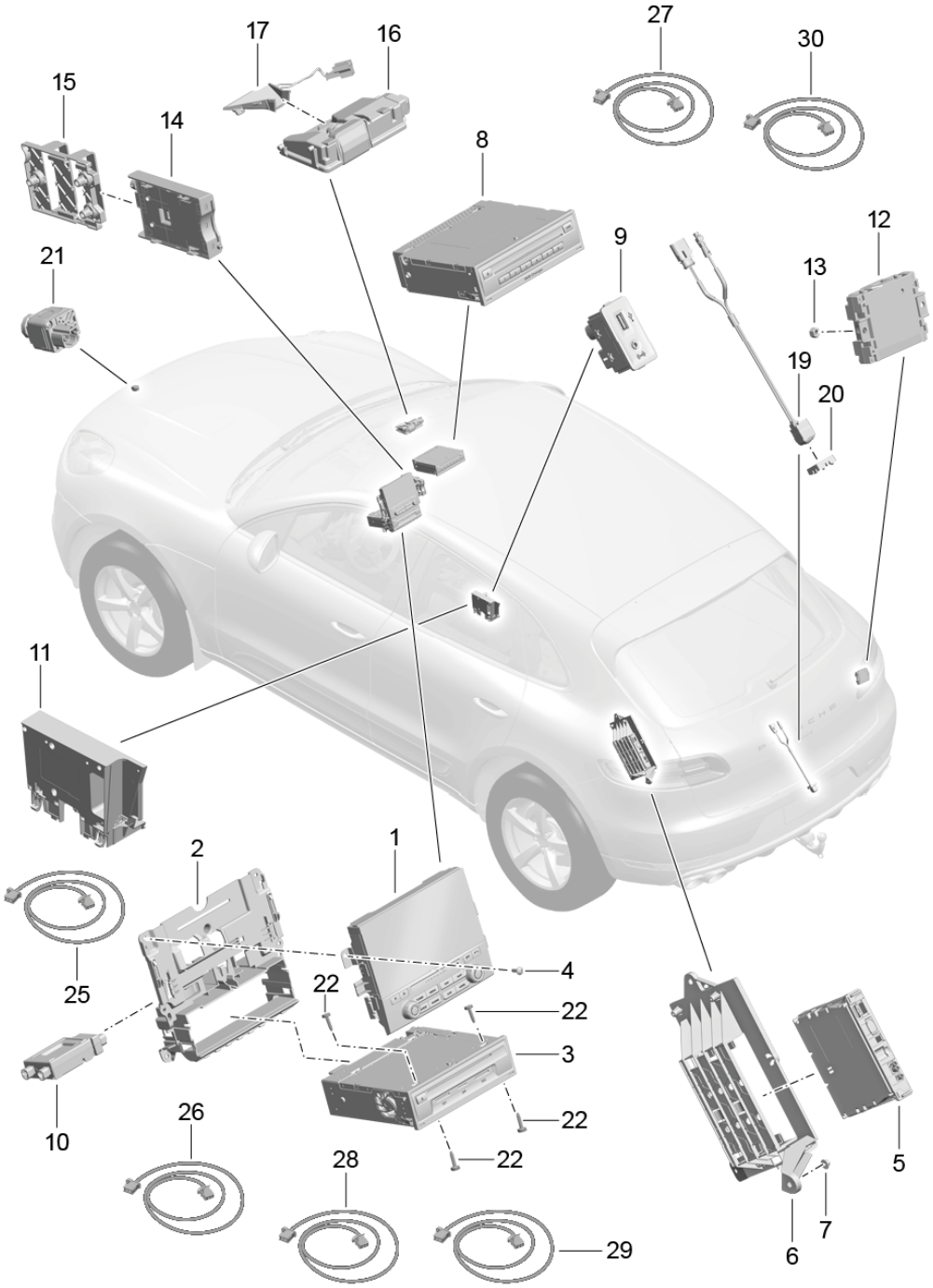

Model: 95B **Model life 2014>>**

Pos	Part Number	Description	Remark	Qty	Model
		Screen	17-		
		Central computer			
		Navigation			
		TV			
		Microphone			
		Multimedia interface			
		Coupler box			
		Camera			
		Connecting line			
1	95B 919 606 B	Screen		1	
	95B 919 606 B DML	Matt Black/hi-gloss chrome			
1	95B 919 606 BX	Screen		1	
	95B 919 606 BX DML	Matt Black/hi-gloss chrome			
2	95B 035 464	Bracket		1	
		Screen			
		And			
		Central computer			
3	95B 035 035 C	Central computer		1	IER1/QU1/QV3
					I9ZC/9ZK
		Control unit			
	95B 035 035 C 6N3	Black			
3	95B 035 035 X	Central computer		1	IER1/QU1/QV3
					I9ZC/9ZK
		Control unit			
	95B 035 035 X 6N3	Black			
(3)	95B 035 036 C	Central computer		1	IER1/QV0/QV1
					I9ZC/9ZK
		Control unit			
	95B 035 036 C 6N3	Black			
(3)	95B 035 036 X	Central computer		1	IER1/QV0/QV1
					I9ZC/9ZK
		Control unit			
	95B 035 036 X 6N3	Black			
(3)	95B 035 037 C	Central computer		1	IER1/QU1/QV3
					I9ZE/9ZX
		Control unit			
	95B 035 037 C 6N3	Black			
(3)	95B 035 037 X	Central computer		1	IER1/QU1/QV3
					I9ZE/9ZX
		Control unit			
	95B 035 037 X 6N3	Black			
(3)	95B 035 038 C	Central computer		1	IER1/QV0/QV1
					I9ZE/9ZX
		Control unit			
	95B 035 038 C 6N3	Black			
(3)	95B 035 038 X	Central computer		1	IER1/QV0/QV1
					I9ZE/9ZX
		Control unit			
	95B 035 038 X 6N3	Black			
(3)	95B 035 039 C	Central computer		1	IER2/QV0/QV1
					I9ZC/9ZK
		Control unit			
	95B 035 039 C 6N3	Black			
(3)	95B 035 039 X	Central computer		1	IER2/QV0/QV1
					I9ZC/9ZK
		Control unit			
	95B 035 039 X 6N3	Black			
(3)	95B 035 040 C	Central computer		1	IER2/QV0/QV1
					I9ZE/9ZX
		Control unit			
	95B 035 040 C 6N3	Black			
(3)	95B 035 040 X	Central computer		1	IER2/QV0/QV1
					I9ZE/9ZX

Model: 95B **Model life 2014>>**

Pos	Part Number	Description	Remark	Qty	Model
		Control unit			
	95B 035 040 X 6N3	Black			
(3)	95B 035 041 C	Central computer		1	IER2/QU1/QV3 I9ZC/9ZK
		Control unit			
	95B 035 041 C 6N3	Black			
(3)	95B 035 041 X	Central computer		1	IER2/QU1/QV3 I9ZC/9ZK
		Control unit			
	95B 035 041 X 6N3	Black			
(3)	95B 035 868 C	Central computer		1	IER2/QU1/QV3 I9ZE/9ZX
		Control unit			
	95B 035 868 C 6N3	Black			
(3)	95B 035 868 X	Central computer		1	IER2/QU1/QV3 I9ZE/9ZX
		Control unit			
	95B 035 868 X 6N3	Black			
(3)	95B 035 890 C	Central computer		1	IER3/QU8/9ZC I9ZK
		Control unit			
	95B 035 890 C 6N3	Black			
(3)	95B 035 890 X	Central computer		1	IER3/QU8/9ZC I9ZK
		Control unit			
	95B 035 890 X 6N3	Black			
(3)	95B 035 892 C	Central computer		1	IER3/QU8/9ZE I9ZX
		Control unit			
	95B 035 892 C 6N3	Black			
(3)	95B 035 892 X	Central computer		1	IER3/QU8/9ZE I9ZX
		Control unit			
	95B 035 892 X 6N3	Black			
(3)	95B 035 893 C	Central computer		1	IER4/QV0/9ZE I9ZX
		Control unit			
	95B 035 893 C 6N3	Black			
(3)	95B 035 893 X	Central computer		1	IER4/QV0/9ZE I9ZX
		Control unit			
	95B 035 893 X 6N3	Black			
(3)	95B 035 894 B	Central computer		1	IER6/QV0/QV1 I9ZC/9ZK
		Control unit			
	95B 035 894 B 6N3	Black			
(3)	95B 035 894 X	Central computer		1	IER6/QV0/QV1 I9ZC/9ZK
		Control unit			
	95B 035 894 X 6N3	Black			
(3)	95B 035 895 B	Central computer		1	IER6/QV0/QV1 I9ZE/9ZX
		Control unit			
	95B 035 895 B 6N3	Black			
(3)	95B 035 895 X	Central computer		1	IER6/QV0/QV1 I9ZE/9ZX
		Control unit			
	95B 035 895 X 6N3	Black			
(3)	95B 035 896 B	Central computer		1	IER8/QV0/9ZE I9ZX
		Control unit			
	95B 035 896 B 6N3	Black			
(3)	95B 035 896 X	Central computer		1	IER8/QV0/9ZE

Model: 95B **Model life 2014>>**

Pos	Part Number	Description	Remark	Qty	Model
					I9ZX
		Control unit			
	95B 035 896 X 6N3	Black			
(3)	95B 035 897 B	Central computer		1	IER5/QV0/QV1
					I9ZC/9ZK
		Control unit			
	95B 035 897 B 6N3	Black			
(3)	95B 035 897 X	Central computer		1	IER5/QV0/QV1
					I9ZC/9ZK
		Control unit			
	95B 035 897 X 6N3	Black			
(3)	95B 035 898 B	Central computer		1	IER5/QV0/QV1
					I9ZE/9ZX
		Control unit			
	95B 035 898 B 6N3	Black			
(3)	95B 035 898 X	Central computer		1	IER5/QV0/QV1
					I9ZE/9ZX
		Control unit			
	95B 035 898 X 6N3	Black			
(3)	95B 035 899 B	Central computer		1	IER7/QV0/QV1
					I9ZE/9ZX
		Control unit			
	95B 035 899 B 6N3	Black			
(3)	95B 035 899 X	Central computer		1	IER7/QV0/QV1
					I9ZE/9ZX
		Control unit			
	95B 035 899 X 6N3	Black			
4	N 910 742 01	Oval-head screw		4	
		M5X16			
5	9A7 919 191 00	Receiving part		1	IER1/ER2/ER8
					IQU1/QV1
		TV			
(5)	9A7 919 192 00	Receiving part		1	IER6/QV1
		TV			
(5)	9A7 919 146 00	Receiving part		1	IER7/QV1
		TV			
(5)	9A7 919 129 00	Receiving part		1	IER5/QV1
		TV			
6	95B 035 251	Support		1	IQU1/QV1
		Receiving part			
		TV			
7	N 908 877 03	Nut		3	
		M6			
8	9A7 035 108 00	DVD device		1	
9	95B 035 252	Multimedia interface		1	IER5
(9)	95B 035 252 A	Multimedia interface		1	IER1/ER2/ER3
					IER4/ER6/ER7
					IER8
10	9A7 642 953 00	USB distributor		1	IER5
11	95B 035 773 A	Coupler box		1	I9ZC/9ZE

Model: 95B **Model life 2014>>**

Pos	Part Number	Description	Remark	Qty	Model
	95B 035 773 A 1E0	Black			
12	9A7 646 456 00	Booster Mobile phone		1	IER1/ER2/ER5 IER6/ER7/ER8 I9ZC/9ZE
13	N 011 005 18	Hexagon nut		2	
14	9A7 919 813 00	Card reader		1	IER5
15	95B 035 480	Support Card reader		1	IER5
16	7PP 980 653 D	Camera Windscreen		1	I7Y2/7Y3/7Y6 I7Y7/8G0/8G1 I8G2/9Q1/9Q6
17	7PP 858 066	Cover with Heating		1	I7Y2/7Y3/7Y6 I7Y7/8G0/8G1 I8G2/9Q1/9Q6
19	95B 980 551 K	Reversing camera		1	I7X8
20	95B 807 286	Retaining clip Reversing camera		1	I7X8
21	5Q0 980 546 A	Camera TOP VIEW		4	I8A4
22	9A7 008 064 00	Round head screw M 2,5 X 10		4	II8L/9ZK/9ZX
25	95B 035 550 BT	Connecting line Coupler box Centre console 800 MM		1	I9ZC/9ZE
26	95B 971 086 N	Connecting line Central computer To USB distributor 260 MM		1	IER5/I8L/UI4
27	95B 971 086 P	Connecting line USB distributor To Multimedia interface 1810 MM		1	IER5/I8L/UI4
28	95B 971 086 AF	Connecting line Central computer To Multimedia interface Connector housing Round for * 1690 MM		1	II8L/UI4
29	95B 971 086 AG	Connecting line Central computer To Multimedia interface Connector housing for Stop ANSCHLUSS 1585 MM		1	II8L/UI4
30	95B 971 086 AD	Connecting line Central computer To		1	II8L

Model: 95B **Model life 2014>>**

Pos	Part Number	Description	Remark	Qty	Model
		Display unit Control part 225 MM			

Illustration: 911-03

PORSCHE

Model: 95B **Model life 2014>>**

Model: 95B **Model life 2014>>**

Pos	Part Number	Description	Remark	Qty	Model
		SD card Data Navigation for Update			
1	9P1 909 000 G	SD card Data Navigation		1	IER1
1	9P1 909 000 H	SD card Data Navigation		1	IER3/ER4
1	9P1 909 000 J	SD card Data Navigation		1	IER2
1	9P1 909 000 L	SD card Data Navigation		1	IER5
1	9P1 909 000 N	SD card Data Navigation		1	IER8

Illustration: 911-04

PORSCHE

Model: 95B **Model life 2014>>**

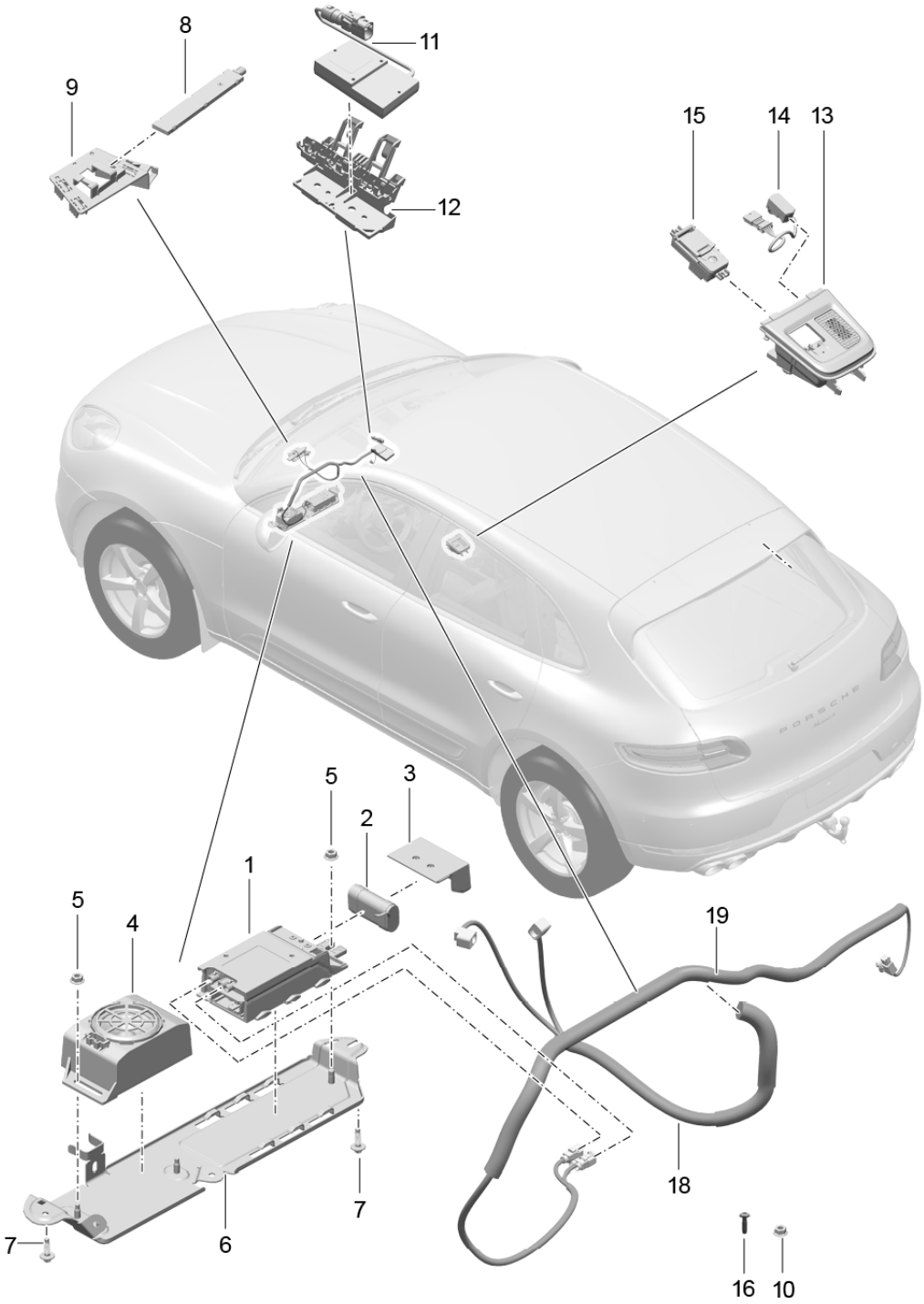

Model: 95B **Model life 2014>>**

Pos	Part Number	Description	Remark	Qty	Model
		Emergency call system			INZ3
1	9P1 035 284 B	Control unit Communication Box		1	
2	9P1 915 611	Battery for Communication Box		1	
3	9P1 035 215	Lid for Communication Box		1	
4	7PP 035 709 A	Loudspeaker		1	
5	N 015 082 10	Hexagon nut		4	
6	95B 035 205	Support		4	
7	N 106 847 01	Oval-head screw 5X20		2	
8	9A7 035 504 00	Antenna GSM		2	
9	95B 035 525 A	Support Antenna Left		1	
(9)	95B 035 526 A	Support Antenna Right		1	
10	N 015 082 10	Hexagon nut		2	
11	95B 035 504	Antenna GPS		1	
12	95B 907 179	Support Antenna GPS		1	
13	95B 857 273 A	Cover Centre console		1	
	95B 857 273 A 6N3	Black			
14	9P1 035 712	Microphone		1	
15	9P1 959 511	Switch		1	
	9P1 959 511 6N3	Black			
16	N 106 258 02	Oval-head screw 3X10		2	
17	95B 974 128	Wiring harness Emergency call system		1	
18	95B 035 550 CK	Single line for Control unit Emergency call system To Antenna GSM Left 3985 MM And Antenna GSM Right 5825 MM Connector housing Bordeaux Red Violet		1	
19	95B 035 550 CL	Single line for		1	

Model: 95B **Model life 2014>>**

Pos	Part Number	Description	Remark	Qty	Model
		Control unit Emergency call system To Antenna GPS 6710 MM Connector housing Blue			

Illustration: 911-05

PORSCHE

Model: 95B **Model life 2014>>**

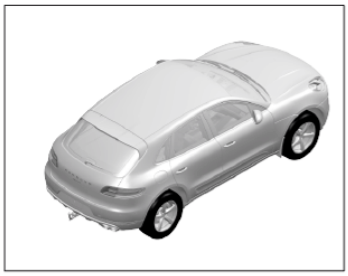

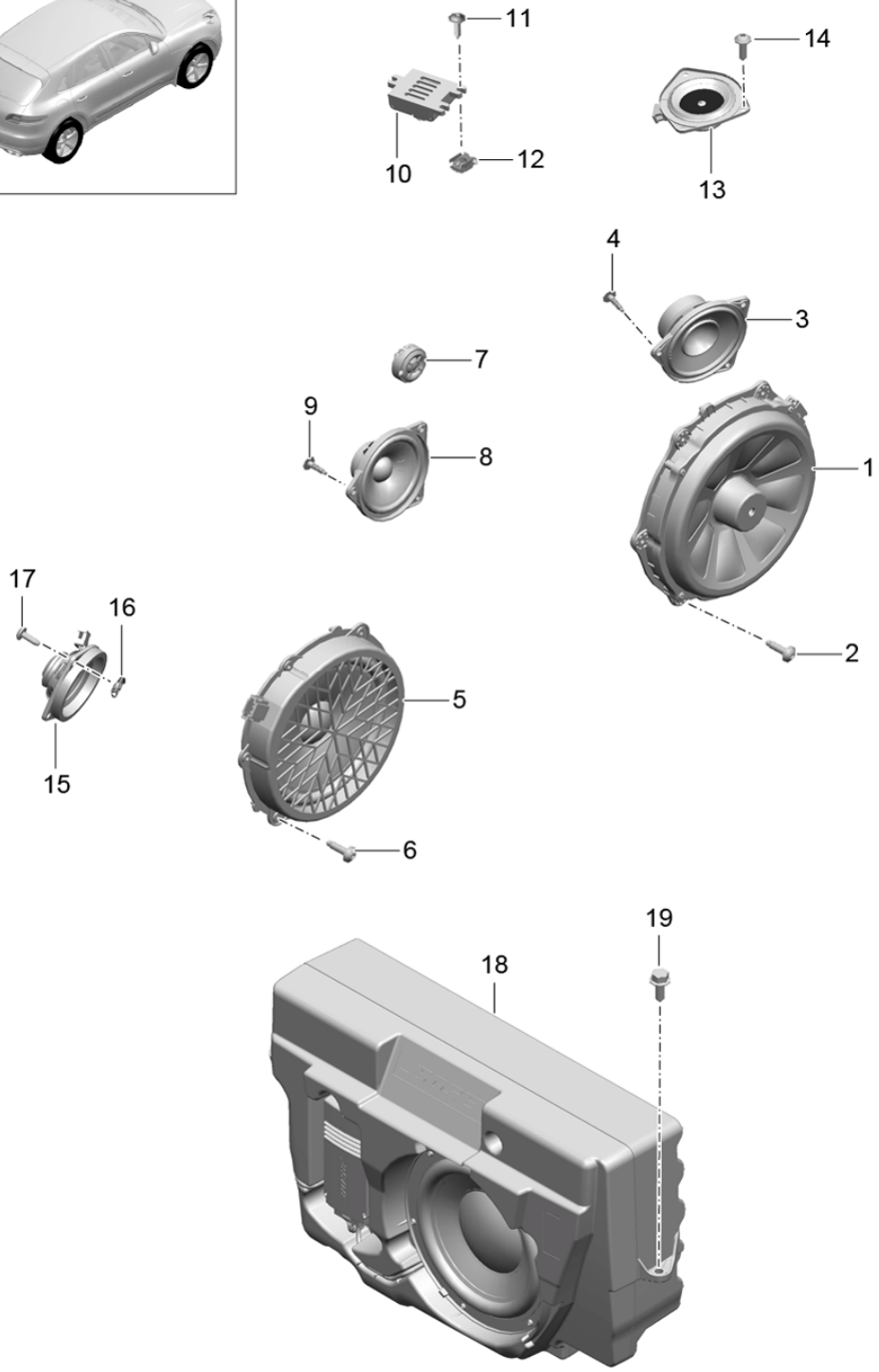

Model: 95B **Model life 2014>>**

Pos	Part Number	Description	Remark	Qty	Model
		Loudspeaker			
1	7PP 035 454 H	Woofer Door Front		2	I9VJ
(1)	7PP 035 454 L	Woofer Door Front		2	I9VK
(1)	7PP 035 454 M	Woofer Door Front		2	I9VL
(1)	970 645 551 02	Woofer Door Front		2	I8RV
2	N 106 847 01	Oval-head screw		12	
3	7PP 035 415 H	Mid-range loudspeaker Door trim panel Front		2	I8RV
(3)	7PP 035 415 J	Mid-range loudspeaker Door trim panel Front		2	I9VK
(3)	7PP 035 415 F	Mid-range loudspeaker Door trim panel Front		2	I9VL
(3)	7PP 035 415 G	Mid-range loudspeaker Door trim panel Front		2	I9VJ
4	999 919 250 01	Lens-head screw		3	
5	7PP 035 453 B	Woofer Door Rear		2	I9VJ
(5)	7PP 035 710 C	Woofer Door Rear		2	I9VL
(5)	970 645 651 02	Woofer Door Rear		2	I8RV/9VK
6	N 106 847 01	Oval-head screw		12	
7	7PP 035 411	Tweeter Door trim panel Rear		2	I8RV/9VK
(7)	7PP 035 411 D	Tweeter Door trim panel Rear		2	I9VL
(7)	7PP 035 412 A	Tweeter Door trim panel Rear		2	I9VJ
8	7PP 035 415 G	Mid-range loudspeaker Door trim panel Rear		2	I9VJ
9	999 919 250 01	Lens-head screw		3	
10	7PP 035 411	Tweeter Front		2	I8RV/9VK
(10)	7PP 035 411 D	Tweeter Front		2	I9VL

Model: 95B **Model life 2014>>**

Pos	Part Number	Description	Remark	Qty	Model
(10)	7PP 035 411 E	Tweeter Front		2	I9VJ
11	N 906 986 06	Tapping screw		6	
12	N 906 988 01	Speed nut		6	
13	7PP 035 828 F	Loudspeaker Dashboard		2	I9VK
(13)	7PP 035 828 D	Loudspeaker Dashboard		2	I9VL
(13)	7PP 035 828 E	Loudspeaker Dashboard		2	I9VJ
14	N 910 742 01	Fastening screw		3	
(15)	7PP 035 416 C	Loudspeaker Mid-range loudspeaker		1	I9VJ
16	999 507 138 01	Speed nut		3	
17	999 073 339 09	Tapping screw		3	
18	95B 035 481	Subwoofer for Radio PCM 3		1	I9VL
18	95B 035 481 B	Subwoofer for Radio Central computer		1	I9VL
(18)	95B 035 481 A	Subwoofer		1	I9VJ
19	N 106 532 01	Hexagon-head bolt		2	

Illustration: 911-10

Model: 95B **Model life 2014>>**

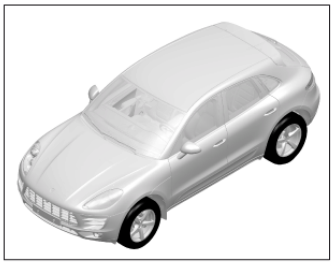

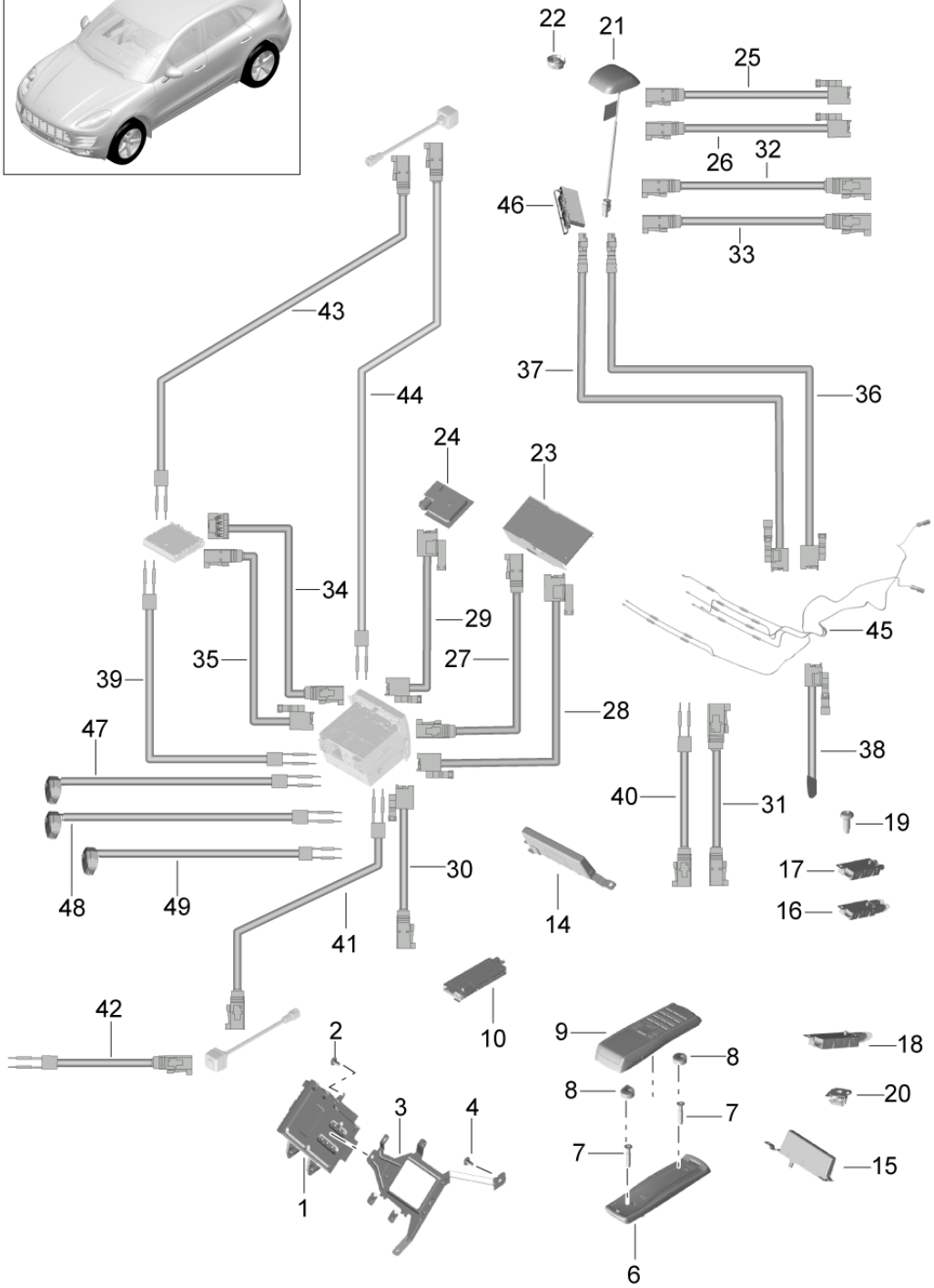

Model: 95B **Model life 2014>>**

Pos	Part Number	Description	Remark	Qty	Model
		Telephone	-16		
		Booster			
		Antenna booster			
		Lines			
		Antenna			
		Video			
		Booster			
		Audio			
1	7PP 035 223 M	Booster		1	I7Q4/9VL
(1)	95B 035 223	Booster		1	I9VK
1	7PP 035 223 AA	Booster		1	I7Q0/7Q7/7T1
					I7T4/9VL
(1)	7PP 035 223 AB	Booster		1	I9VJ
2	N 907 371 07	Fastening screw		3	
3	95B 035 209 A	Support		1	
		Booster			
4	N 907 371 07	Fastening screw		3	
		Microphone			
		See illustrations			
		9/11/00			
6	955 646 214 00	Mounting		1	I9ZP
		Receiver			
7	N 911 598 01	Countersunk-head screw		2	
8	955 646 311 00	Stopper		2	
9	7PP 035 725 B	Receiver		1	
		Telephone			
10	7PP 035 730 B	Control unit		1	I9W1/9ZP
		Telephone			
14	95B 035 225 A	Antenna booster		1	
15	95B 035 225 B	Antenna booster		1	IQV1/QV5
16	958 647 316 00	Antenna booster		1	IQU0/QV0/9M9
		Auxiliary heater			
17	958 647 317 00	Antenna booster		1	IQV1/QV5/9M9
18	958 647 318 00	Antenna booster		1	IQV1/QV5/9M9
		TV			
(18)	958 647 320 00	Antenna booster		1	IQU0
		Side window			
		Left			
(18)	958 647 319 00	Antenna booster		1	IQV5
		Side window			
		Left			
19	N 104 472 01	Lens-head screw		3	
20	955 647 269 00	Expander nut		2	
22	1J0 035 437	Nut		1	
23	7PP 035 503	Antenna		1	I9W1/9ZP
		GSM			

Model: 95B **Model life 2014>>**

Pos	Part Number	Description	Remark	Qty	Model
24	7PP 035 504 A	Antenna GPS		1	I7Q4/7Q7/7T1 I7T4
25	95B 035 550 C	Connecting line Antenna		1	I8DQ/8DV
(25)	95B 035 550 AL	Connecting line Antenna		1	I8DQ/8DV
27	95B 035 550 S	Connecting line Antenna		1	IQV1/QV5
28	95B 035 550 G	Connecting line Antenna GMS		1	I9W1/9ZP
29	95B 035 550 E	Connecting line Antenna GPS		1	I7Q7/7T1/7T4
30	95B 035 550 R	Connecting line Antenna		1	IQV0/QV5
31	95B 035 550 Q	Connecting line Antenna		1	IQV0/QV5
32	95B 035 550	Connecting line Antenna Central locking system		1	
33	95B 035 550 AM	Connecting line Antenna Central locking system		1	IL0L/9M9
34	95B 035 550 A	Connecting line Antenna TV		1	IL0L/QV1/QV5
35	95B 035 550 AJ	Connecting line Antenna TV		1	IQV1/QV5
36	95B 035 550 N	Connecting line Antenna VTS vehicle tracking		1	IL0L/7G5/7G9 I7I0/7I2
37	95B 035 550 P	Connecting line Antenna VTS vehicle tracking Control unit		1	LL IL0L/7G5/7G9 I7I0/7I2
(37)	95B 035 550 AN	Connecting line Antenna VTS vehicle tracking Control unit		1	RL IL0R/7G5/7G9 I7I0/7I2
38	95B 035 550 T	Connecting line Antenna VTS vehicle tracking		1	I7G5/7G9/7I2
39	95B 971 298 B	Wiring harness PCM Reversing camera		1	LL IQV1/QV5 RL
40	95B 971 298 AC	Wiring harness Rear Seat Entertainment		1	I9WM
41	95B 971 298 T	Wiring harness RTV		1	IL0R/QU0/QV0 IQV3/7Q0/7Q7 I7T1/7T4/8A4
42	95B 971 298 R	Wiring harness		1	IL0L/QU0/QV0 IQV3/QV4/QV8 I7Q0/7Q7/7T1

Model: 95B **Model life 2014>>**

Pos	Part Number	Description	Remark	Qty	Model
					I7T4
		RTV			
43	95B 971 298	Wiring harness		1	IL0L/QV1/QV5 I7X8
		TV Reversing camera			
44	95B 971 298 A	Wiring harness		1	IQU0/QV0/QV3 IQV4/QV8/7X8
		PCM Reversing camera			
45	95B 035 502 A	Antenna		1	I7G5/7G9/7I0 I7I2
		VTS vehicle tracking			
46	95B 907 245 A	Antenna		1	I7G5/7G9/7I0 I7I2
		VTS vehicle tracking			
47	95B 971 086 A	Connecting line PCM USB stick		1	IUF1/8DQ/8DV
48	95B 971 086 D	Connecting line PCM USB stick		1	IUF1/8DQ/8DV
49	95B 971 086	Connecting line PCM Instrument cluster		1	

Illustration: 911-11

PORSCHE

Model: 95B **Model life 2014>>**

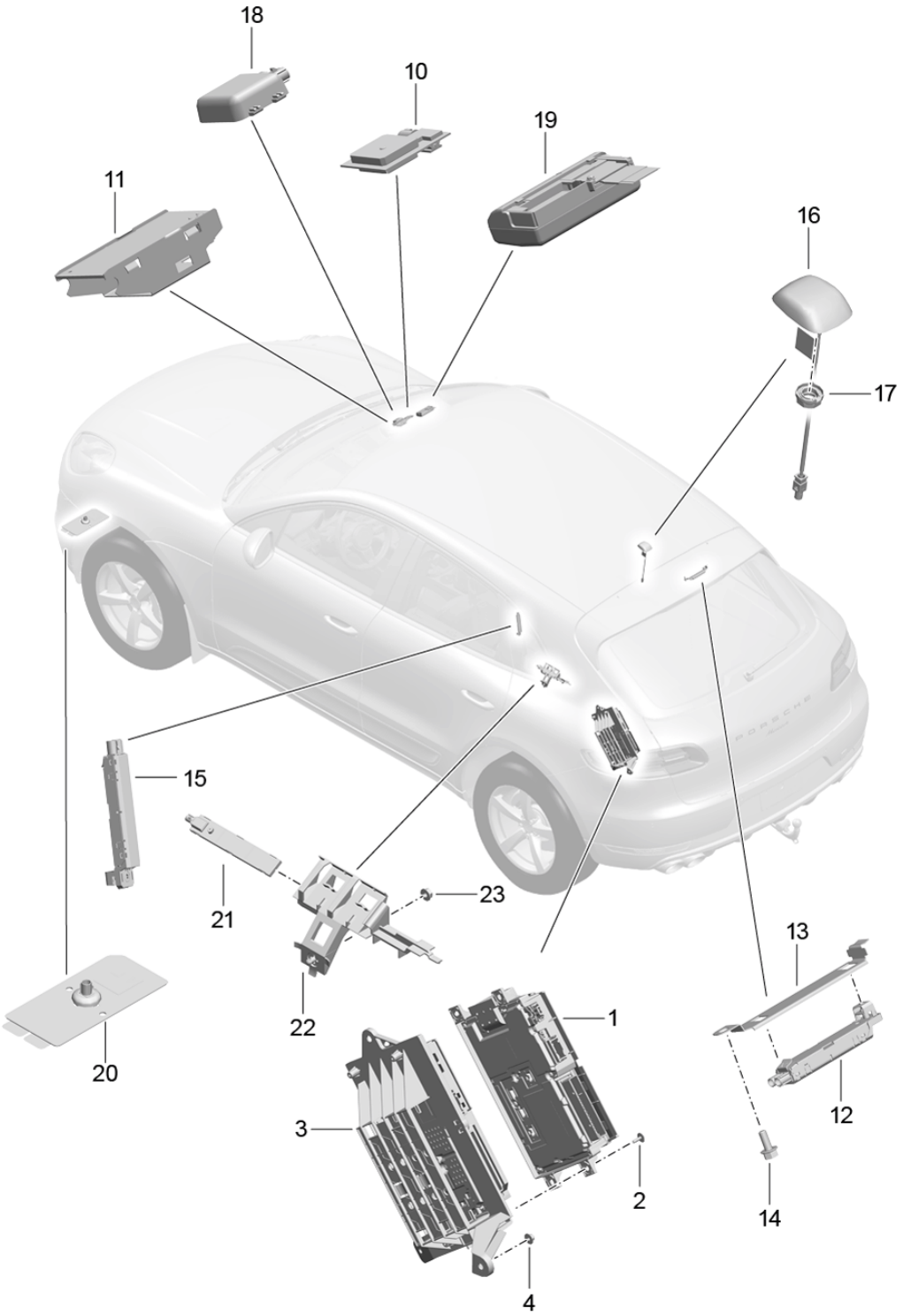

Model: 95B **Model life 2014>>**

Pos	Part Number	Description	Remark	Qty	Model
		Telephone	17-		
		Booster			
		Antenna booster			
		Booster			
		Audio			
1	9A7 645 443 10	Booster		1	I9VL
(1)	95B 035 223 B	Booster		1	I9VJ
2	N 909 747 01	Oval-head sheetmetal screw		4	I9VL
(2)		Oval-head sheetmetal screw		2	I9VJ
3	95B 035 251	Support		1	I9VJ/9VL
		Booster			
4	N 908 877 03	Hexagon nut		3	
10	7PP 035 504 A	Antenna		1	
		GPS			
11	971 035 503 A	Antenna		1	I9ZC/9ZK
		GSM			
12	95B 035 225 D	Antenna booster		1	IER1/ER2/ER3
					IER4/ER6/ER7
					IER8/ER9
		2-pole			
		CURRY			
12		Antenna booster			
		Rear lid			
(12)	95B 035 225 E	Antenna booster		1	IER5
		2-pole			
		Violet			
(12)	95B 035 225 F	Antenna booster		1	-IER5/IER1
					IER2/ER3/ER4
					IER6/ER7/ER8
					IER9
		Single pole			IQU8/QV0/QV3
		Bordeaux Red			
(12)	95B 035 225 G	Antenna booster		1	IER5/QV0
		Single pole			
		Blue			
(12)	95B 035 225 H	Antenna booster		1	IER1/ER2/ER3
					IER4/ER6/ER7
					IER8/ER9/QU1
					IQV1
		2-pole			-IER5
		Bordeaux Red			
(12)	95B 035 225 Q	Antenna booster		1	IER5/QV1
		2-pole			
		Blue			
13	95B 035 545 A	Support		1	
		for			
		Antenna booster			
14	N 908 479 03	Hexagon-head bolt		1	
15	958 647 320 00	Antenna booster		1	
		Side window			
(15)	95B 035 225 J	Antenna booster		1	-IER5/IER1

Model: 95B **Model life 2014>>**

Pos	Part Number	Description	Remark	Qty	Model
					IER2/ER3/ER4 IER6/ER7/ER8 IER9/QV1
		Single pole Green			
(15)	95B 035 225 K	Antenna booster Single pole Brown		1	IER5/QV1
(15)	95B 035 225 L	Antenna booster		1	-IER5/IER1 IER2/ER3/ER4 IER6/ER7/ER8 IER9/QV3
		Single pole Black			
(15)	95B 035 225 M	Antenna booster		1	-IER5/IER1 IER2/ER3/ER4 IER6/ER7/ER8 IER9/QU1
		2-pole Black			
(15)	95B 035 225 N	Antenna booster		1	-IER5/IER1 IER2/ER3/ER4 IER6/ER7/ER8 IER9
		Single pole			IQU8/QV0/QV3 I9M9
		Grey			
(15)	95B 035 225 P	Antenna booster		1	-IER5/IER1 IER2/ER3/ER4 IER6/ER7/ER8 IER9
		2-pole Green			IQU1/QV1/9M9
17	1J0 035 437	Nut		1	
18	9A7 647 504 00	Antenna ETC		1	IER5
19	9A7 647 504 10	Antenna VICS		1	IER5
20	971 035 510 B	Antenna GSM/UMTS/LTE1		1	I9ZC/9ZE/9ZK
21	9A7 035 504 00	Antenna GSM		1	I7G5/7G9/7I0 I7I2
22	95B 035 525 A	Support Antenna GSM		1	I7G5/7G9/7I0 I7I2
23	N 015 082 10	Hexagon nut		1	I7G5/7G9/7I0 I7I2

Illustration: 911-12

PORSCHE

Model: 95B **Model life 2014>>**

Model: 95B **Model life 2014>>**

Pos	Part Number	Description	Remark	Qty	Model
		Single line Connecting line Antenna Antenna booster	17-		
1	95B 035 550 CA	Connecting line Antenna LTE Bumper To Connection point		1	I9ZC
2	95B 035 550	Connecting line Connection point Roof To Control unit Electronics Body front section		1	
3	95B 035 550 CT	Connecting line Antenna booster To Connection point Roof And Connection point Rear light		1	II8L
4	95B 035 550 CN	Connecting line Central computer To Antenna GSM And Connection point Rear lid		1	IER1/ER3/I8L I9ZC/9ZK
5	95B 035 550 BA	Connecting line Central computer To Antenna GSM		1	IER5/I8L/9ZK
6	95B 035 550 DD	Connecting line Central computer To Antenna GPS		1	II8L
7	95B 035 550 DE	Connecting line Card reader To Antenna ETC/DSRC		1	IER5/I8L
8	95B 035 550 DF	Connecting line Central computer To Antenna SDARS		1	II8L/QU8
9	95B 035 550 DA	Connecting line Central computer To Connection point Roof Centre		1	II8L/QU1/QV3
10	95B 035 550 CP	Connecting line		1	IER1/ER2/ER6 IER7/I8L/QU1 IQV1

Model: 95B **Model life 2014>>**

Pos	Part Number	Description	Remark	Qty	Model
		Receiving part TV To Rear lid Left			
11	95B 035 550 CR	Connecting line Receiving part TV To Connection point Roof And Side window To Connection point Roof		1	-IER5/IER1 IER2/ER6/I8L IQU1
12	95B 035 550 CQ	Connecting line Receiving part TV To Connection point Roof And Side window Left		1	-IER5/IER1 IER2/ER6/ER7 II8L/QV1
13	95B 035 550 CS	Connecting line Receiving part TV To Connection point Roof And Side window Left		1	IER5/I8L/QV1
14	95B 035 550 BL	Connecting line Side window Right To Connection point Roof And Auxiliary heater		1	II8L/QU1/QV1 I9M9
15	95B 035 550 BN	Connecting line Side window Right To Connection point Roof		1	II8L/QU1/QV1 I9M0/9M1
16	95B 035 550 BP	Connecting line Side window Right To Connection point Roof		1	IER5/I8L/QV1
17	95B 035 550 BR	Connecting line Connection point Roof		1	II8L/QV3

Model: 95B **Model life 2014>>**

Pos	Part Number	Description	Remark	Qty	Model
		To Side window Left DAB			
18	95B 035 550 BS	Connecting line Side window Right To Auxiliary heater		1	II8L/9M9
19	95B 035 550 CJ	Connecting line Control unit VTS vehicle tracking To Antenna VTS vehicle tracking		1	I7G5/7G9/7I0 I7I2
20	95B 035 550 AL	Connecting line Antenna booster To Connection point Roof Rear lid		1	
21	95B 035 550 CB	Connecting line Antenna Radio Rear lid To Connection point Roof Rear lid		1	IER1/ER2/ER3 IER4/ER6/ER7 IER8/QV0/QV3
22	95B 035 550 CC	Connecting line Antenna Radio Rear lid To Connection point Roof Rear lid		1	IER5/QU8/QV0 IQV3
23	95B 035 550 CD	Connecting line Antenna booster To Connection point Roof Rear lid Radio And Connection point Roof Rear lid TV		1	IER1/ER2/ER3 IER4/ER6/ER8 IQU1/QV1
24	95B 035 550 CE	Connecting line Antenna booster To Connection point Roof Rear lid Radio And		1	IER5/QU1/QV1

Model: 95B **Model life 2014>>**

Pos	Part Number	Description	Remark	Qty	Model
		Connection point Roof Rear lid TV			
25	95B 035 550 DG	Connecting line Antenna Radio		1	IER1/ER2/ER3 IER4/ER6/ER7 IER8
26	95B 035 550 DH	Connecting line Antenna Radio Central locking system Rear lid To Connection point Roof Rear lid Radio And Connection point Roof Rear lid Central locking system		1	IER5