Foreword

Welcome to the growing family of new NISSAN owners. This vehicle is delivered to you with confidence. It was produced using the latest techniques and strict quality control.

This manual was prepared to help you understand the operation and maintenance of your vehicle so that you may enjoy many miles of driving pleasure. Please read through this manual before operating your vehicle.

A separate Warranty Information Booklet explains details about the warranties covering your vehicle. The NISSAN Service and Maintenance Guide explains details about maintaining and servicing your vehicle. Additionally, a separate Customer Care/Lemon Law Booklet (U.S. only) will explain how to resolve any concerns you may have with your vehicle, as well as clarify your rights under your state's lemon law.

Your NISSAN dealer knows your vehicle best. When you require any service or have any questions, we will be glad to assist you with the extensive resources available to us.

READ FIRST — THEN DRIVE SAFELY

Before driving your vehicle please read your Owner's Manual carefully. This will ensure familiarity with controls and maintenance requirements, assisting you in the safe operation of your vehicle.

WARNING

IMPORTANT SAFETY INFORMATION
REMINDERS FOR SAFETY!

Follow these important driving rules to help ensure a safe and comfortable trip for you and your passengers!

- **NEVER drive under the influence of alcohol or drugs.**
- **ALWAYS observe posted speed limits and never drive too fast for conditions.**
- **ALWAYS give your full attention to driving and avoid using vehicle features or taking other actions that could distract you.**
- **ALWAYS use your seat belts. Refer to "Child safety" and "Child restraints" in the "Safety — Seats, seat belts and supplemental restraint system" section for precautions regarding children.**
- **ALWAYS provide information about the proper use of vehicle safety features to all occupants of the vehicle.**
- **ALWAYS review this Owner's Manual for important safety information.**

MODIFICATION OF YOUR VEHICLE

This vehicle should not be modified. Modification could affect its performance, safety or durability, and may even violate governmental regulations. In addition, damage or performance problems resulting from modification may not be covered under NISSAN warranties.

WHEN READING THE MANUAL

This manual includes information for all options available on this model. Therefore, you may find some information that does not apply to your vehicle.

All information, specifications and illustrations in this manual are those in effect at the time of printing. NISSAN reserves the right to change specifications or design at any time without notice.

IMPORTANT INFORMATION ABOUT THIS MANUAL

You will see various symbols in this manual. They are used in the following ways:

WARNING

This is used to indicate the presence of a hazard that could cause death or serious personal injury. To avoid or reduce the risk, the procedures must be followed precisely.

CAUTION

This is used to indicate the presence of a hazard that could cause minor or moderate personal injury or damage to your vehicle. To avoid or reduce the risk, the procedures must be followed carefully.

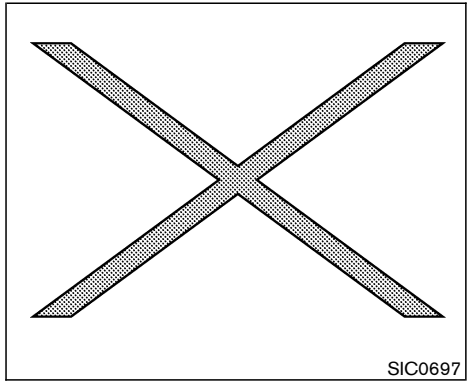

If you see this symbol, it means **"Do not do this"** or **"Do not let this happen"**.

If you see a symbol similar to these in an illustration, it means the arrow points to the front of the vehicle.

Arrows in an illustration that are similar to these indicate movement or action.

Arrows in an illustration that are similar to these call attention to an item in the illustration.

CALIFORNIA PROPOSITION 65 WARNING

WARNING

Engine exhaust, some of its constituents, and certain vehicle components contain or emit chemicals known to the State of California to cause cancer and birth defects or other reproductive harm. In addition, certain fluids contained in vehicles and certain products of component wear contain or emit chemicals known to the State of California to cause cancer and birth defects or other reproductive harm.

CALIFORNIA PERCHLORATE ADVISORY

Some vehicle parts, such as lithium batteries, may contain perchlorate material. The following advisory is provided: "Perchlorate Material — special handling may apply, See www.dtsc.ca.gov/hazardouswaste/perchlorate."

Bluetooth®

BLUETOOTH® is a trademark owned by Bluetooth SIG, Inc., U.S.A. and licenced to Visteon Corporation.

© 2006 NISSAN MOTOR CO., LTD.
TOKYO, JAPAN

All rights reserved. No part of this Owner's Manual may be reproduced or stored in a retrieval system, or transmitted in any form, or by any means, electronic, mechanical, photocopying, recording or otherwise, without the prior written permission of Nissan Motor Co., Ltd.

NISSAN CUSTOMER CARE PROGRAM

NISSAN CARES ...

Both NISSAN and your NISSAN dealer are dedicated to serving all your automotive needs. Your satisfaction with your vehicle and your NISSAN dealer are our primary concerns. Your NISSAN dealer is always available to assist you with all your automobile sales and service needs.

However, if there is something that your NISSAN dealer cannot assist you with or you would like to provide NISSAN directly with comments or questions, please contact the NISSAN Consumer Affairs Department using our toll-free number:

For U.S. customers
1-800-NISSAN-1
(1-800-647-7261)
For Canadian customers
1-800-387-0122

The Consumer Affairs Department will ask for the following information:

— Your name, address, and telephone number
— Vehicle identification number (attached to the top of the instrument panel on the driver's side)
— Date of purchase
— Current odometer reading
— Your NISSAN dealer's name
— Your comments or questions

OR

You can write to NISSAN with the information on the left at:

For U.S. customers
Nissan North America, Inc.
Consumer Affairs Department
P.O. Box 685003
Franklin, TN 37068-5003

For Canadian customers
Nissan Canada Inc.
5290 Orbitor Drive
Mississauga, Ontario L4W 4Z5

We appreciate your interest in NISSAN and thank you for buying a quality NISSAN vehicle.

Table of Contents

Illustrated table of contents	0
Safety — Seats, seat belts and supplemental restraint system	1
Instruments and controls	2
Pre-driving checks and adjustments	3
Display screen, heater, air conditioner and audio systems	4
Starting and driving	5
In case of emergency	6
Appearance and care	7
Maintenance and do-it-yourself	8
Technical and consumer information	9
Index	10

0 Illustrated table of contents

Air bags, seat belts and child restraints 0-2
Exterior front 0-3
Exterior rear 0-4
Coupe models 0-4
Roadster models 0-5
Passenger compartment 0-6
Coupe models 0-6
Roadster models 0-8
Instrument panel 0-10
Meters and gauges 0-11
Engine compartment 0-12

AIR BAGS, SEAT BELTS AND CHILD RESTRAINTS

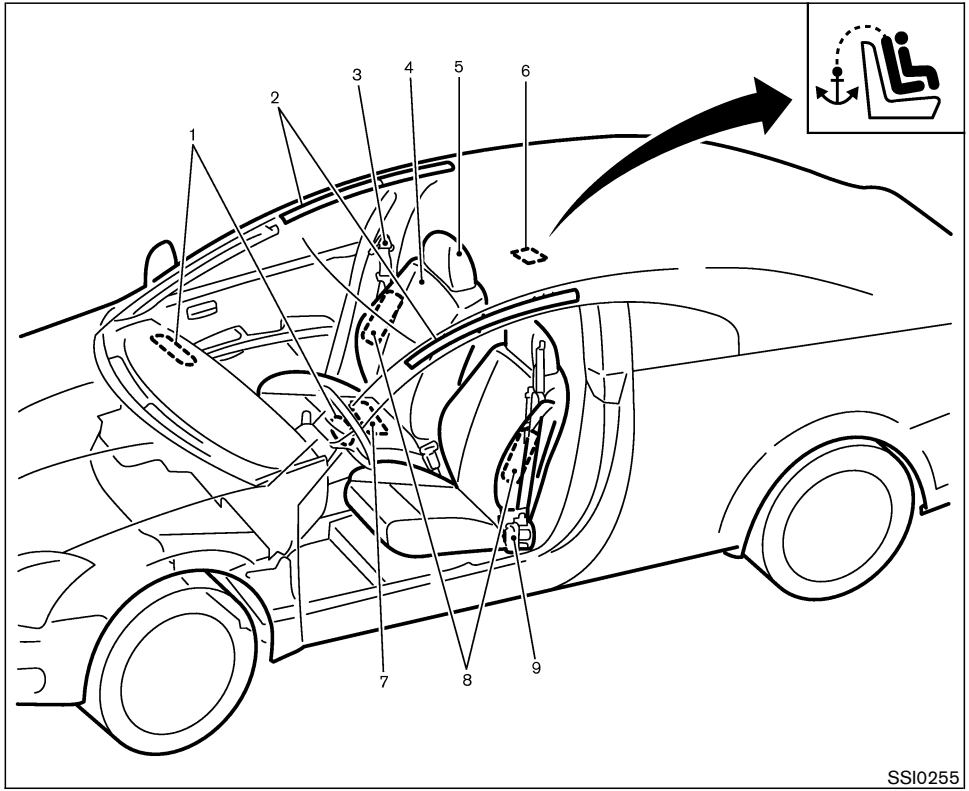

1. Supplemental front-impact air bags (Page 1-28)
2. Supplemental curtain side-impact air bags* (P.1-28)
3. Seat belts (P.1-10)
4. Seats (P.1-2)
   — Child restraints (P.1-17)
5. Head restraints (P.1-9)
6. Child restraint anchor point* (for top tether strap child restraint) (P.1-24)
7. Occupant classification sensor (pattern sensor)
   — Advanced air bag system (P.1-35)
8. Supplemental side air bags* (P.1-28)
9. Pre-tensioner seat belt system (P.1-41)

*: if so equipped

EXTERIOR FRONT

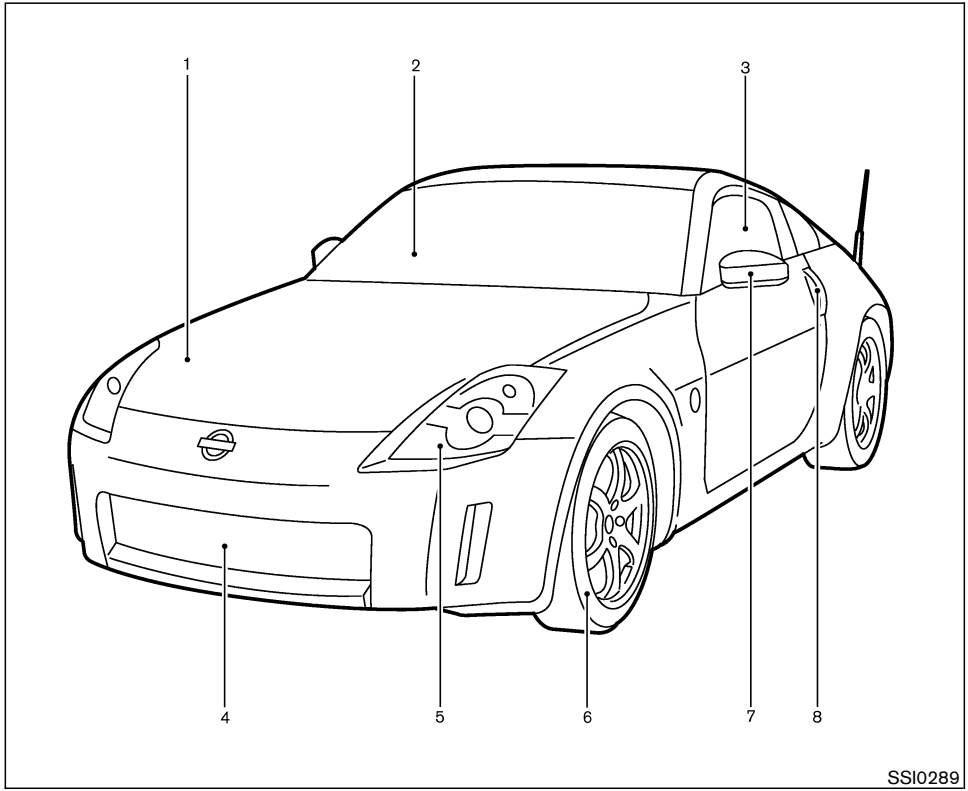

1. Hood (P.3-8)
2. Windshield wiper and washer
   — Switch (P.2-21)
   — Wiper replacement (P.8-19)
   — Washer fluid (P.8-14)
3. Power windows (P.2-39)
   — Automatic adjusting function (P.2-40, P.8-15)
4. Recovery hook installation (P.6-12)
   License plate installation (P.9-12)
5. Headlight, park and turn signal lights
   — Switch (P.2-24)
   — Bulb (P.8-26)
6. Tires
   — Wheels and tires (P.8-29, P.9-8)
   — Flat tire (P.6-2)
   — Tire pressure monitoring system (TPMS) (P.2-13, P.5-3)
7. Outside mirrors (P.3-27)
8. Doors
   — Keys (P.3-2)
   — Door locks (P.3-3)
   — Keyfob (P.3-5)

EXTERIOR REAR

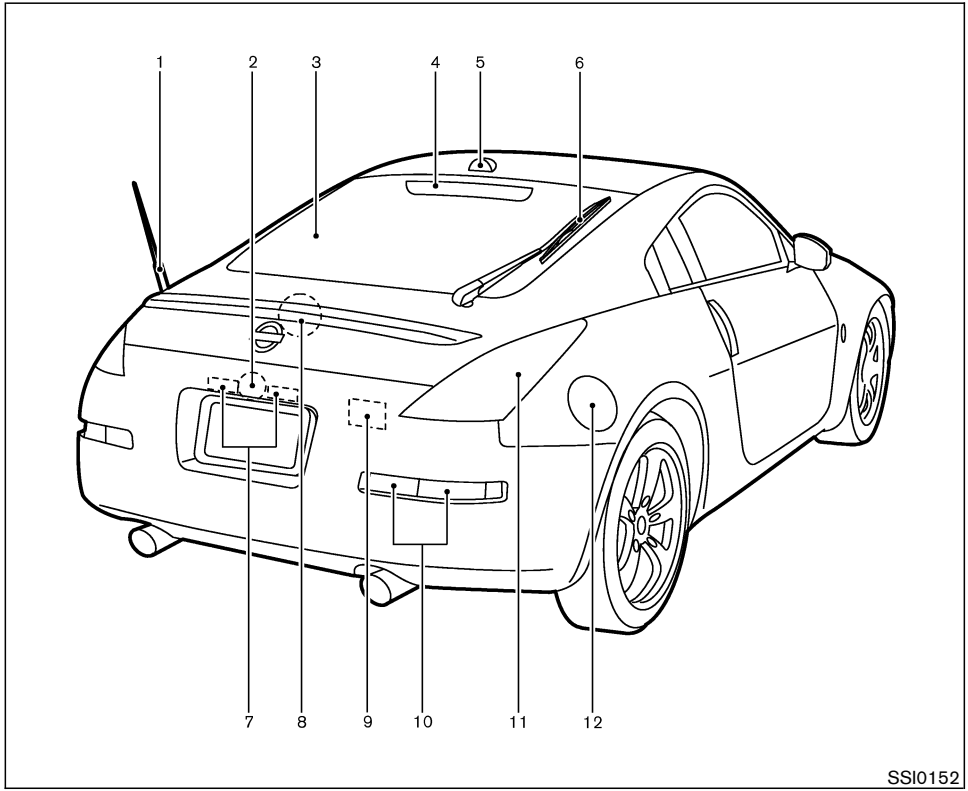

COUPE MODELS

1. Antenna (P.4-30)
2. Rear hatch release switch (P.3-9)
3. Rear window defroster (P.2-23)
4. High-mounted stop light (Bulb) (P.8-27)
5. Satellite radio antenna* (P.4-13)
6. Rear window wiper and washer
   — Switch (P.2-22)
   — Washer fluid (P.8-14)
7. License plate lights (Bulb) (P.8-27)
8. Rear hatch release (secondary) (P.3-10)
9. Luggage compartment light (P.2-42, P.8-27)
10. Back-up, Turn signal light (Bulb) (P.8-27)
11. Side marker, Stop/Tail light (Bulb) (P.8-27)
12. Fuel
    — Fuel-filler door (P.3-23)
    — Fuel recommendation (P.9-3)

*: if so equipped

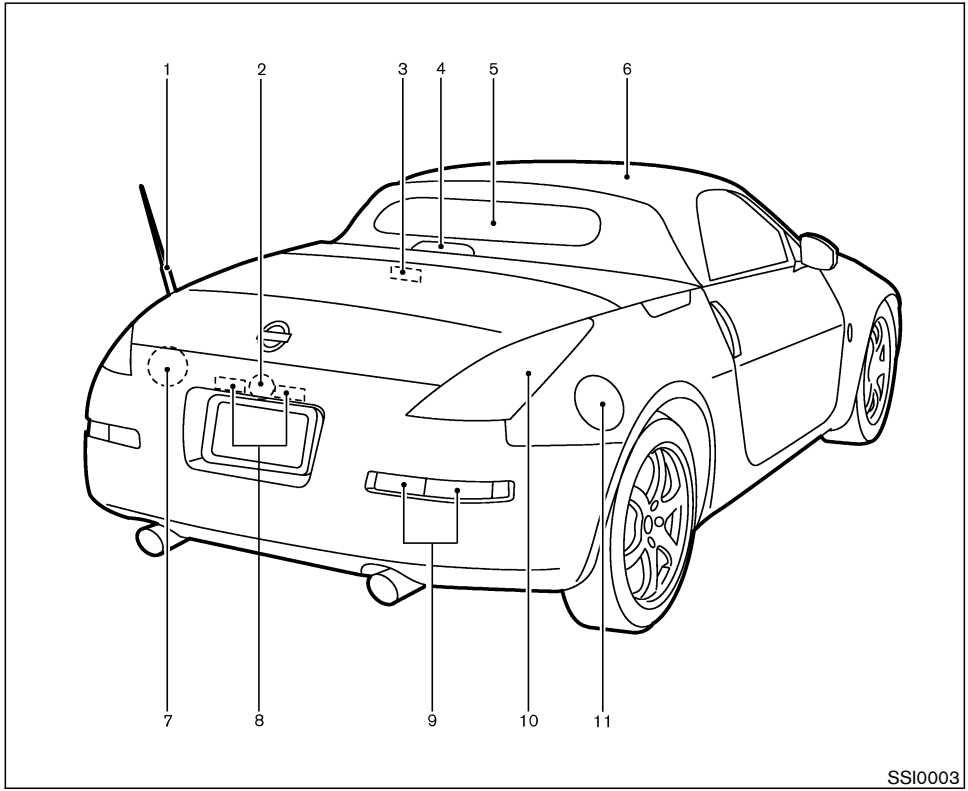

ROADSTER MODELS

1. Antenna (P.4-30)
2. Trunk lid release switch (P.3-10)
3. Trunk light (P.2-42, P.8-27)
4. High-mounted stop light (Bulb) (P.8-27)
5. Rear window defroster (P.2-23)
6. Soft top (P.3-13)
7. Interior trunk lid release (P.3-11)
8. License plate lights (Bulb) (P.8-27)
9. Back-up, Turn signal light (Bulb) (P.8-27)
10. Side marker, Stop/Tail light (Bulb) (P.8-27)
11. Fuel
    — Fuel-filler door (P.3-23)
    — Fuel recommendation (P.9-3)

PASSENGER COMPARTMENT

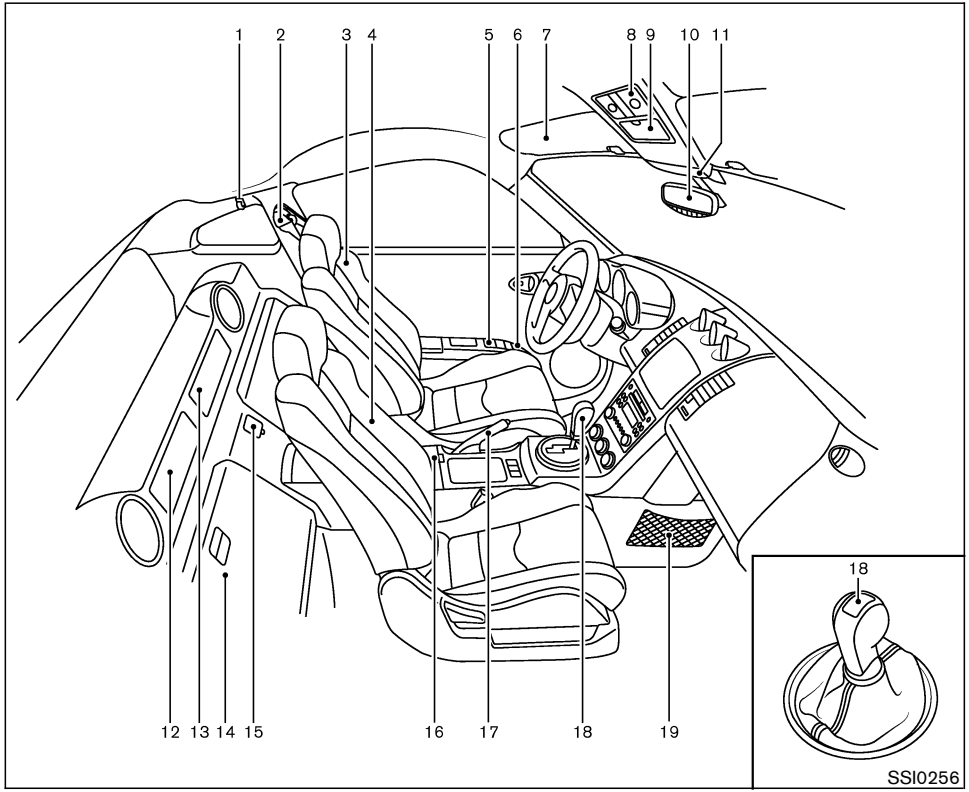

COUPE MODELS

1. Coat hook (P.2-38)
2. Seat belts (P.1-10)
3. Seats
   — Manual seats adjustment (P.1-3)
   — Power seats adjustment (P.1-3)
4. Passenger seat
   — Tilt lever for passenger seat (seatback) (P.1-7)
5. Power window switch (P.2-39)/Power door lock switch (P.3-4)
6. Outside mirror remote control switch (P.3-27)
7. Sun visor (P.3-25)
8. Interior light (P.2-41)
9. Sunglasses holder (P.2-32)
10. Inside mirror (P.3-26)
    — Automatic anti-glare inside mirror* (P.3-26)
    — HomeLink® universal transceiver* (P.2-43)
11. Front passenger air bag status light (P.1-36)/Microphone (Bluetooth® Hands-Free Phone System*) (P.4-31)
12. Rear parcel box (P.2-37)
13. Rear parcel box or Navigation system*1
14. Rear floor box (P.2-35)
15. Power outlet (P.2-31)
16. Console box (P.2-35)
17. Parking brake
    — Operation (P.5-15)

— Parking/Parking on hills (P.5-19)
— Checking (P.8-20)

18. Selector lever or shift lever
    — Automatic transmission (P.5-10)
    — Manual transmission (P.5-13)
19. Cargo net (P.2-33)

*: if so equipped

*1: Refer to the separate Navigation System Owner's Manual.

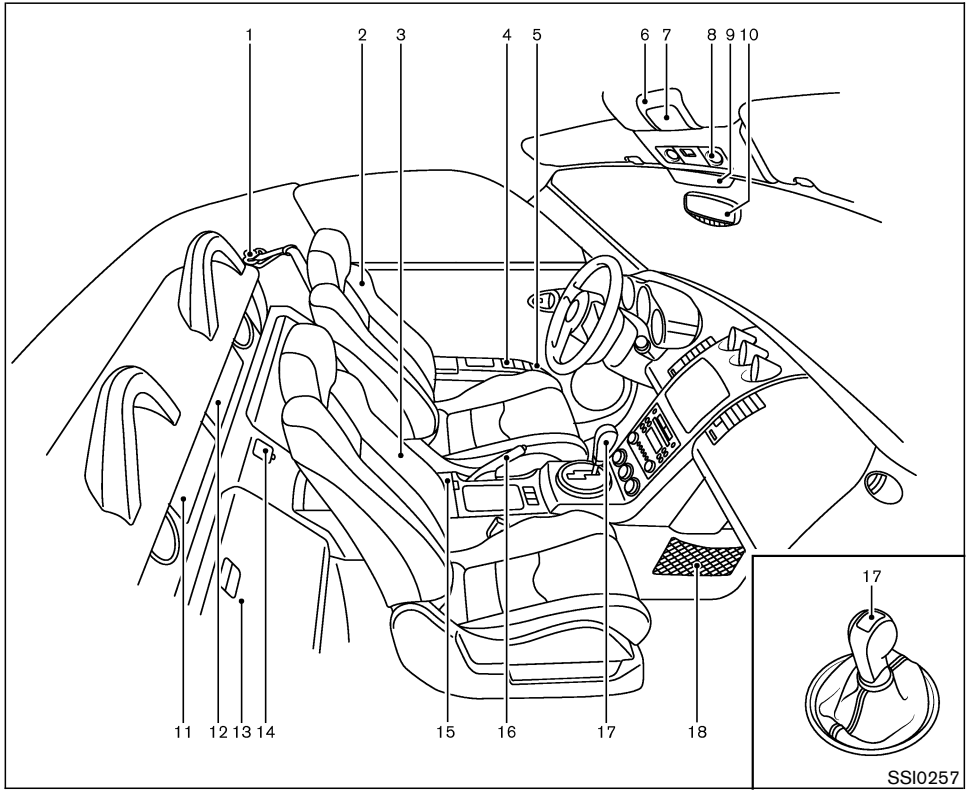

ROADSTER MODELS

1. Seat belts (P.1-10)
2. Seats
   — Power seats adjustment (P.1-4)
   — Ventilated net seats* (P.1-6)
3. Passenger seat
   — Power seatback tilt switch (P.1-7)
   — Cancel switch (P.1-8)
4. Power window switch (P.2-39)/Power door lock switch (P.3-4)
5. Outside mirror remote control switch (P.3-27)
6. Soft top latch lever (P.3-16)
7. Safety switch for soft top latch lever (P.3-16)
8. Interior light (P.2-41)
9. Front passenger air bag status light (P.1-36)
10. Inside mirror (P.3-26)
    — Automatic anti-glare inside mirror* (P.3-26)
    — HomeLink® universal transceiver* (P.2-43)
11. Rear parcel box (P.2-37)
12. Rear parcel box or Navigation system*1
13. Rear floor box (P.2-35)
    — Trunk lid cancel switch (P.3-11)
    — Secondary trunk lid release (P.3-12)
14. Power outlet (P.2-31)
15. Console box (P.2-35)
16. Parking brake
    — Operation (P.5-15)
    — Parking/Parking on hills (P.5-19)
    — Checking (P.8-20)

17. Selector lever or shift lever
    — Automatic transmission (P.5-10)
    — Manual transmission (P.5-13)
18. Cargo net (P.2-33)

*: if so equipped

*1: Refer to the separate Navigation System Owner's Manual.

INSTRUMENT PANEL

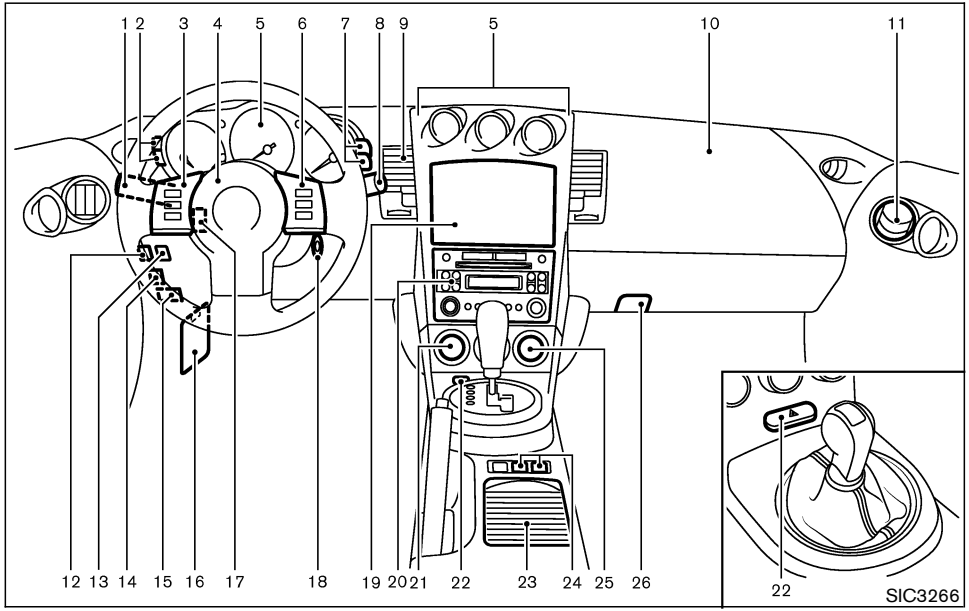

1. Headlight/turn signal switch (P.2-24)
2. Instrument brightness control switch (P.2-26)
3. Steering wheel switch for audio control* (P.4-29) or switch for Bluetooth® Hands-Free Phone System* (P.4-31)
4. Driver supplemental air bag (P.1-28)/Horn (P.2-27)
5. Meters/gauges (P.2-3)
6. Cruise control main/set switch* (P.5-16)
7. Trip computer mode/setting switch (P.2-8)
8. Wiper/washer switch (P.2-21)
9. Center ventilator (P.4-8)
10. Passenger supplemental air bag (P.1-28)
11. Side ventilators (P.4-8)
12. Soft top operating switch (for Roadster models) (P.3-13)
13. VDC (Vehicle dynamic control) OFF switch* (P.2-29) or TCS (Traction control system) OFF switch* (P.2-29)
14. Fuel-filler door opener switch (P.3-23)
15. Hood lock release handle (P.3-8)
16. Fuse box (P.8-23)
17. Tilting steering wheel lock lever (P.3-25)
18. Ignition switch (P.5-6)
19. Navigation system display (P.4-2)*1 or Instrument pocket (P.2-32)
20. Audio system (P.4-12)/Clock (P.2-30)
21. Rear window and outside mirror defroster switch (P.2-23)
22. Hazard warning flasher switch (P.2-27)
23. Cup holder (P.2-33)
24. Heated seat switch* (P.2-28)
25. Heater/air conditioner control (P.4-9)
26. Power outlet (P.2-30)

*: if so equipped

*1: Refer to the separate Navigation System Owner's Manual.

METERS AND GAUGES

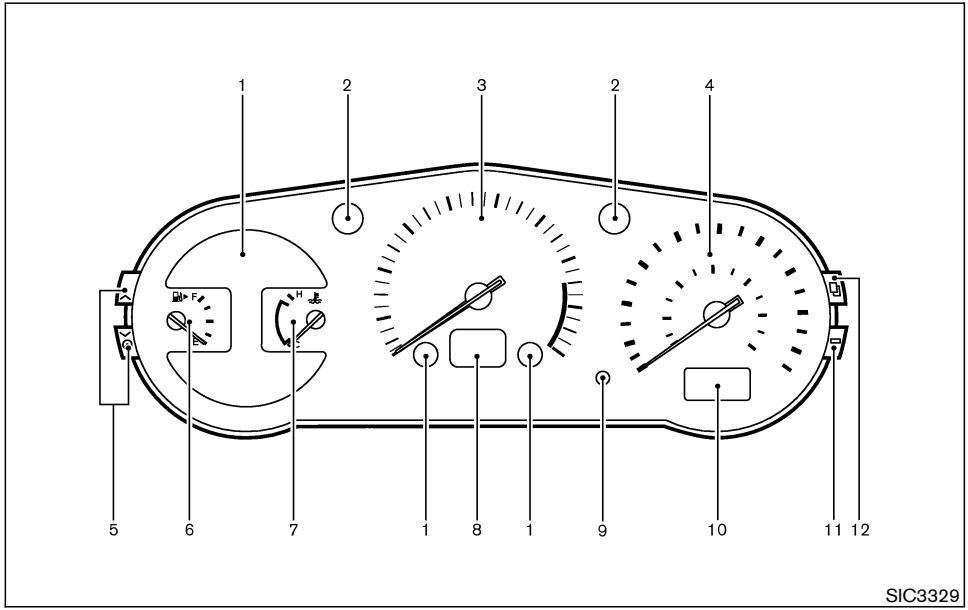

Combination meter

1. Warning/Indicator lights (P.2-11)
2. Turn signal/hazard indicator lights (P.2-26)
3. Tachometer (P.2-5)
4. Speedometer (P.2-4)
5. Instrument brightness control switch (P.2-26)
6. Fuel gauge (P.2-6)
7. Engine coolant temperature gauge (P.2-5)

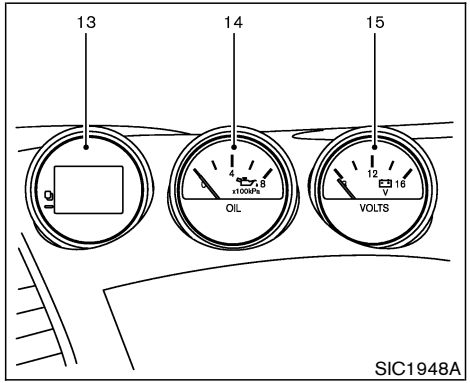

Triple meter

8. Automatic transmission position indicator (P.2-15, P.5-10) or Manual transmission up-shift indicator (P.2-10, P.5-14)
9. Reset knob for trip odometer (P.2-4)
10. Odometer (Total/Twin trip) (P.2-4)
11. Trip computer setting switch (P.2-8)
12. Trip computer mode switch (P.2-8)
13. Trip computer (P.2-8)
14. Engine oil pressure gauge (P.2-7)
15. Volt meter (P.2-8)

ENGINE COMPARTMENT

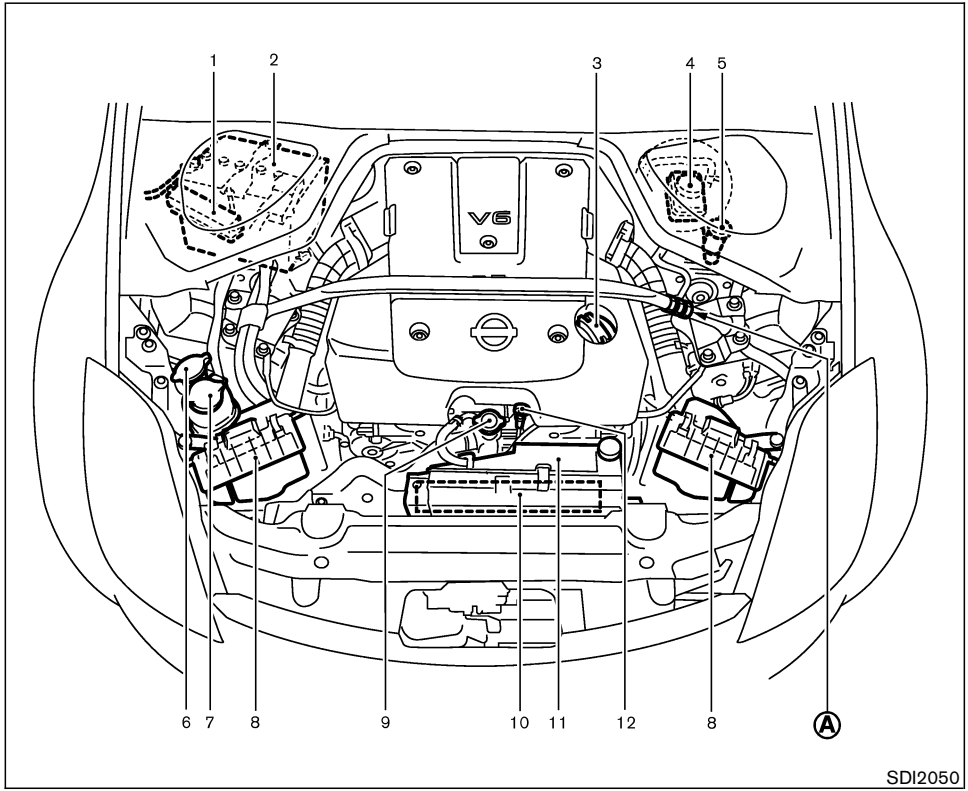

1. Fuse/fusible link holder (P.8-21)
2. Battery (P.8-15)
3. Engine oil filler cap (P.8-9)
4. Brake fluid reservoir (P.8-13)
5. Clutch fluid reservoir (M/T models) (P.8-13)
6. Window washer fluid reservoir (P.8-14)
7. Power steering fluid reservoir (P.8-12)
8. Air cleaner (P.8-18)
9. Radiator filler cap (P.8-8)
10. Engine drive belts (P.8-16)
11. Engine coolant reservoir (P.8-8)
12. Engine oil dipstick (P.8-9)

Do not tamper with the strut tower bar adjustment Ⓐ. The strut tower bar has been adjusted to the most suitable position at the factory.

1 Safety — Seats, seat belts and supplemental restraint system

Seats 1-2
Front manual seat adjustment (for Coupe models) 1-3
Front power seat adjustment (for Coupe models — if so equipped) 1-3
Front power seat adjustment (for Roadster models) 1-4
Seat lifter (for driver's seat) 1-6
Tilting and reclining passenger's seat from driver's seat 1-7
Head restraint adjustment 1-9
Active head restraint (except for ventilated net seats) 1-10
Seat belts 1-10
Precautions on seat belt usage 1-10
Child safety 1-12
Pregnant women 1-13
Injured persons 1-14
Three-point type seat belt with retractor 1-14
Seat belt extenders 1-16
Seat belt maintenance 1-16
Child restraints 1-17
Precautions on child restraints 1-17
Child restraint installation on front passenger seat (Coupe models only) 1-20
Top tether strap child restraint (Coupe models only) 1-24
Booster seats 1-25
Precautions on booster seats 1-25
Booster seat installation on front passenger seat 1-27
Supplemental restraint system 1-28
Precautions on supplemental restraint system 1-28
Supplemental air bag warning labels 1-42
Supplemental air bag warning light 1-43

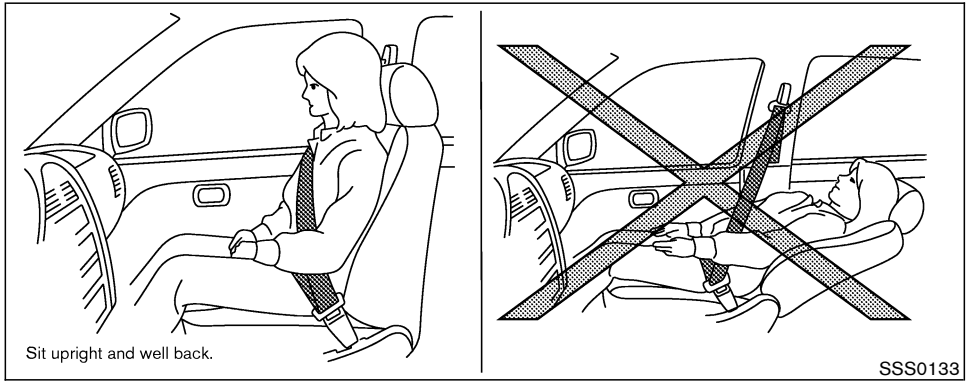

WARNING

- **Do not ride in a moving vehicle when the seatback is reclined. This can be dangerous. The shoulder belt will not be against your body. In an accident, you could be thrown into it and receive neck or other serious injuries. You could also slide under the lap belt and receive serious internal injuries.**
- **For the most effective protection when the vehicle is in motion, the seat should be upright. Always sit well back in the seat with both feet on the floor and adjust the seat belt properly. See "Precautions on seat belt usage" later in this section.**
- **After adjustment, gently rock in the seat to make sure it is securely locked.**
- **Do not leave children unattended inside the vehicle. They could unknowingly activate switches or controls. Unattended children could become involved in serious accidents.**

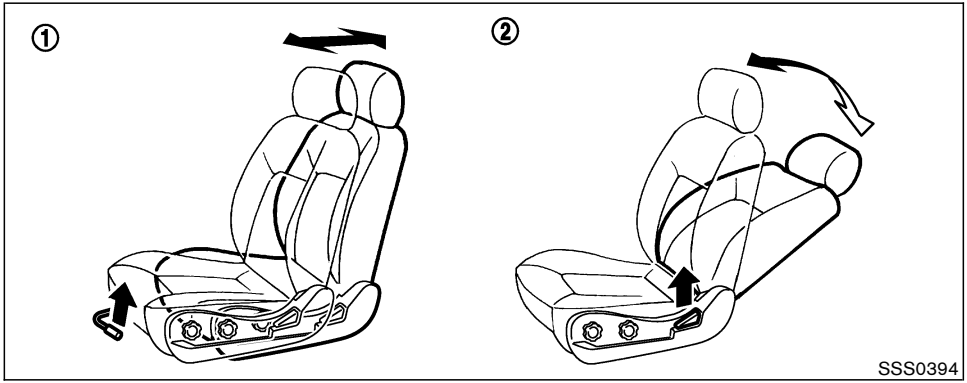

FRONT MANUAL SEAT ADJUSTMENT (for Coupe models)

① Forward and backward

Pull the lever up while you slide the seat forward or backward to the desired position. Release the lever to lock the seat in position.

When sliding the passenger's seat backward, be careful not to crush items in the seatback pocket against the rear floor box.

② Reclining

To recline the seatback, pull the lever up and lean back. To bring the seatback forward again, pull the lever and move your body forward. The seatback will move forward.

The reclining feature allows adjustment of the seatback for occupants of different sizes for added comfort and to help obtain proper seat belt fit. See "Precautions on seat belt usage" later in this section. The seatback may also be reclined to allow occupants to rest when the vehicle is parked.

FRONT POWER SEAT ADJUSTMENT (for Coupe models — if so equipped)

Operating tips

- The seat motor has an auto-reset overload protection circuit. If the motor stops during operation, wait 30 seconds, then reactivate the switch.
- Do not operate the power support seat for a long period of time when the engine is off. This will discharge the battery.

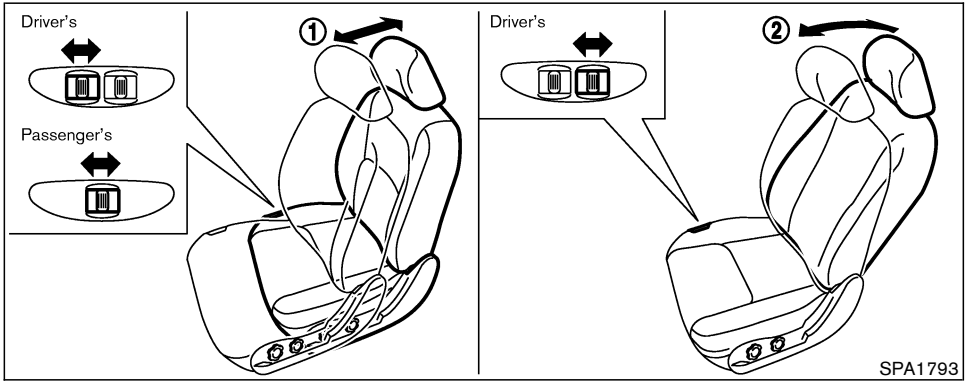

① Forward and backward

Moving the sliding switch forward or backward will slide the seat forward or backward to the desired position.

When sliding the passenger's seat backward, be careful not to crush items in the seatback pocket against the rear floor box.

② Reclining (for driver's seat)

Move the reclining switch backward until the desired angle is obtained. To bring the seatback forward, move the switch forward and move your body forward. The seatback will move forward.

② Reclining (for passenger's seat)

The passenger's seat is equipped with a manual lever for reclining. See "Front manual seat adjustment" earlier in this section.

The reclining feature allows adjustment of the seatback for occupants of different sizes for added comfort and to help obtain proper seat belt fit. See "Precautions on seat belt usage" later in this section. The seatback may also be reclined to allow occupants to rest when the vehicle is parked.

FRONT POWER SEAT ADJUSTMENT (for Roadster models)

Operating tips

- The seat motor has an auto-reset overload protection circuit. If the motor stops during operation, wait 30 seconds, then reactivate the switch.
- Do not operate the power support seat for a long period of time when the engine is off. This will discharge the battery.

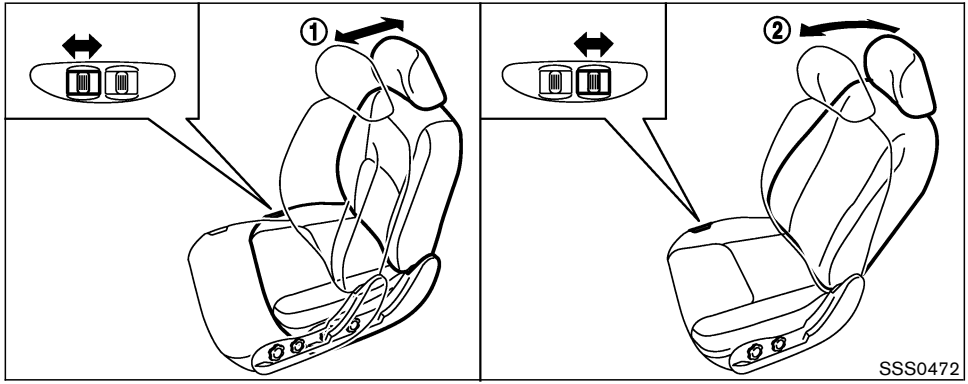

① Forward and backward

Moving the sliding switch forward or backward will slide the seat forward or backward to the desired position.

When sliding the passenger's seat backward, be careful not to crush items in the seatback pocket against the rear floor box.

② Reclining

Move the reclining switch backward until the desired angle is obtained. To bring the seatback forward, move the switch forward and move your body forward. The seatback will move forward.

The reclining feature allows adjustment of the seatback for occupants of different sizes for added comfort and to help obtain proper seat belt fit. See "Precautions on seat belt usage" later in this section. The seatback may also be reclined to allow occupants to rest when the vehicle is parked.

Automatic passenger seatback tilt function

The passenger seatback will automatically tilt forward and backward during the soft top open/close operation. If you need to cancel this function or when a child restraint is installed in the passenger's seat, push the seatback tilt cancel switch to the CANCEL position. For more information about operation conditions, see "Soft top" in the "3. Pre-driving checks and adjustments" section. For the cancel switch, see "Tilting and reclining passenger's seat from driver's seat" later in this section.

Ventilated net seats (if so equipped)

The ventilated net seats are designed for good ventilation while driving. Net cloth is used on the surface of the seatback and the cushion as shown.

CAUTION

- **The seat is made of netted materials. Be careful not to snag your jewelry, such as a ring, bracelet or watch, on the seat.**
- **When using these seats, avoid wearing clothing with soft fabrics (wool, etc.). Clothing may be damaged as it rubs against the netted material.**

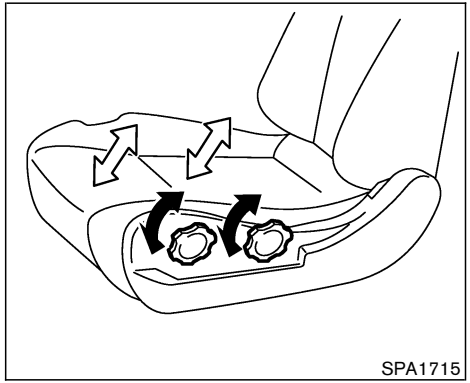

Type A

SEAT LIFTER (for driver's seat)

Type A (except for ventilated net seat)

Turn either dial to adjust the angle and height of the seat cushion to the desired position.

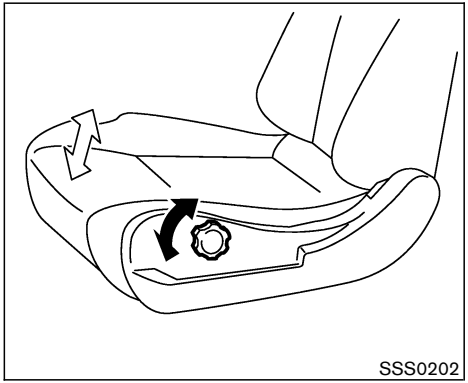

Type B

Type B (for ventilated net seat)

Turn the dial and adjust the angle of the seat cushion to the desired position.

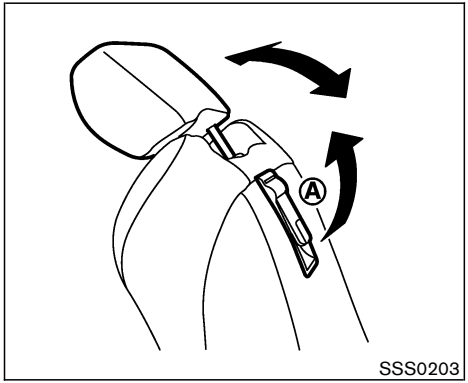

Coupe models

TILTING AND RECLINING PASSENGER'S SEAT FROM DRIVER'S SEAT

The passenger seatback can be adjusted from the driver's seat to make it easier for the driver to use the rear parcel box or rear floor box, or to help the passenger get in the vehicle.

Coupe models (manual type)

To tilt or recline the passenger seatback, pull up the lever (A) located on the back side of it, and move the seatback forward or backward.

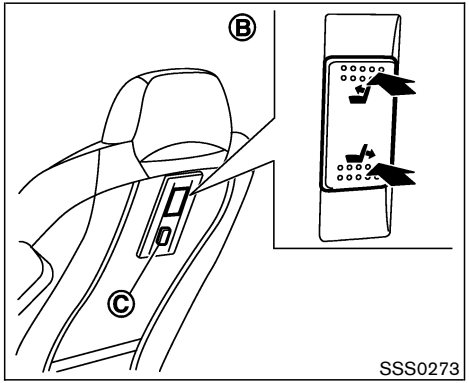

Roadster models — Type A

Roadster models (power type)

The power seatback tilt switch (B) and the seatback tilt cancel switch (C) are located on the back side of the passenger seatback as shown.

Tilting/reclining operation:

To tilt the passenger seatback forward, push the top (side) of the power seatback tilt switch (B) for more than 0.5 second. The seatback will automatically tilt forward. To stop the movement, push the top or bottom of the switch.

To tilt or adjust the seatback backward, push and hold the bottom (side) of the power

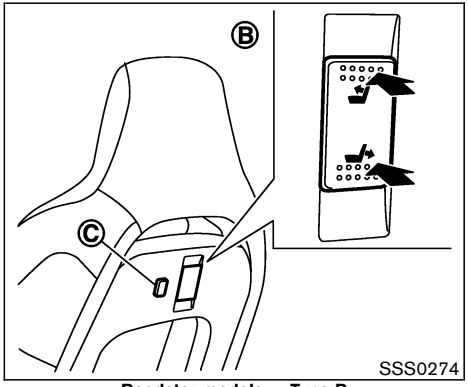

Roadster models — Type B

seatback tilt switch. While the switch is held down, the seatback will move backward to the original position that was last selected using the reclining switch (located on the seat cushion). Release the switch to stop the movement.

Operation conditions:

The power seatback tilt switch does not activate under the following conditions.

- when the passenger seat sliding/reclining switches on the seat cushion are being operated.
- when the seat tilt cancel switch is in the CANCEL position. (See “Seatback tilt cancel switch” later in this section.)
- when the passenger seat belt is fastened.
- when the vehicle speed reaches 4 MPH (7 km/h) and more.

The automatic tilting/reclining movement will be stopped:

- when any of the above 4 conditions occur.
- when the power seatback tilt switch (top or bottom) is pushed again.
- when the seatback is moved with the soft top open/close operation.

When this interruption occurs, you cannot move the seatback backward from the stopped position with the power seatback tilt switch. Use the reclining switch (on the seat cushion) to select the seatback position.

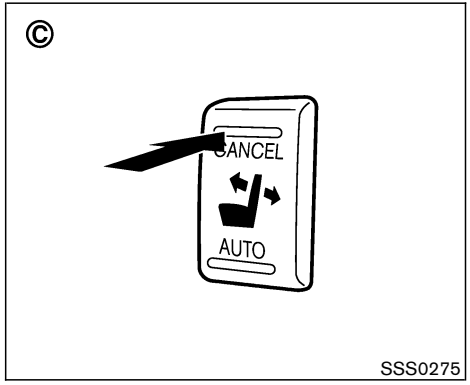

Seatback tilt cancel switch:

When the seatback tilt cancel switch (C) is pushed to the CANCEL position, the tilting/reclining operation using the power seatback tilt switch (B) will be cancelled. Only the sliding/reclining switches (located on the seat cushion) are operational. Push the seatback tilt cancel switch to the AUTO position to reactivate the power seatback tilt switch.

This cancel switch is linked with the automatic passenger seatback tilt function of the soft top operation. See “Soft top” in the “3. Pre-driving checks and adjustments” section.

CAUTION

When a child restraint is installed in the passenger seat, be sure to turn the seat-back tilt cancel switch to the CANCEL position. Otherwise, the child restraint may be damaged.

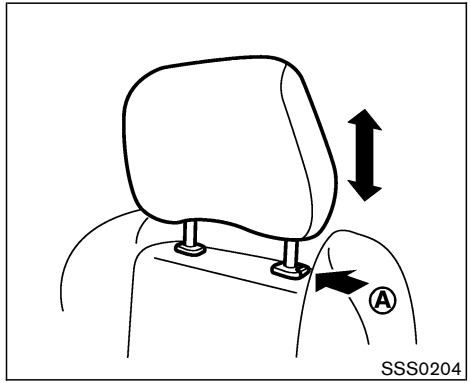

HEAD RESTRAINT ADJUSTMENT

To raise the head restraint, just pull it up. To lower, push the lock knob Ⓐ and push the head restraint down.

The ventilated net seats (if so equipped for Roadster models) have non-adjustable head restraints.

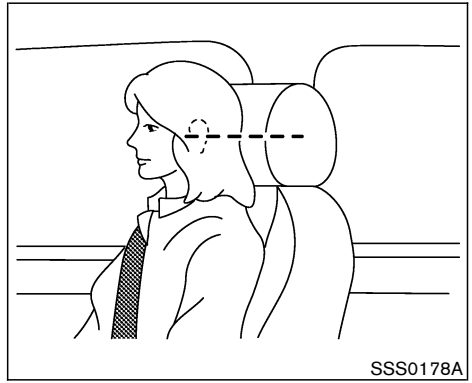

Adjust the head restraints so the center is level with the center of your ears.

WARNING

Head restraints should be adjusted properly as they may provide significant protection against injury in an accident. Do not remove them. Check the adjustment after someone else uses the seat.

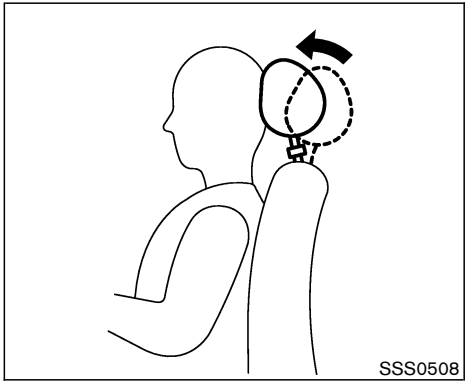

ACTIVE HEAD RESTRAINT (except for ventilated net seats)

WARNING

- **Always adjust the head restraints properly as specified in the previous section. Failure to do so can reduce the effectiveness of the active head restraint.**
- **Active head restraints are designed to supplement other safety systems. Always wear seat belts. No system can prevent all injuries in any accident.**
- **Do not attach anything to the head restraint stalks. Doing so could impair active head restraint function.**

The head restraint moves forward utilizing the force that the seatback receives from the occupant in a rear-end collision. The movement of the head restraint helps support the occupant's head by reducing its backward movement and helping absorb some of the forces that may lead to whiplash type injuries.

Active head restraints are effective for collisions at low to medium speeds in which it is said that whiplash injury occurs most.

Active head restraints operate only in certain rear-end collisions. After the collision, the head restraints return to their original positions.

Properly adjust the active head restraints as described in the previous section.

SEAT BELTS

PRECAUTIONS ON SEAT BELT USAGE

If you are wearing your seat belt properly adjusted and you are sitting upright and well back in your seat with both feet on the floor, your chances of being injured or killed in an accident and/or the severity of injury may be greatly reduced. NISSAN strongly encourages you and all of your passengers to buckle up every time you drive, even if your seating position includes a supplemental air bag.

Most U.S. states and Canadian provinces or territories require that seat belts be worn at all times when a vehicle is being driven.

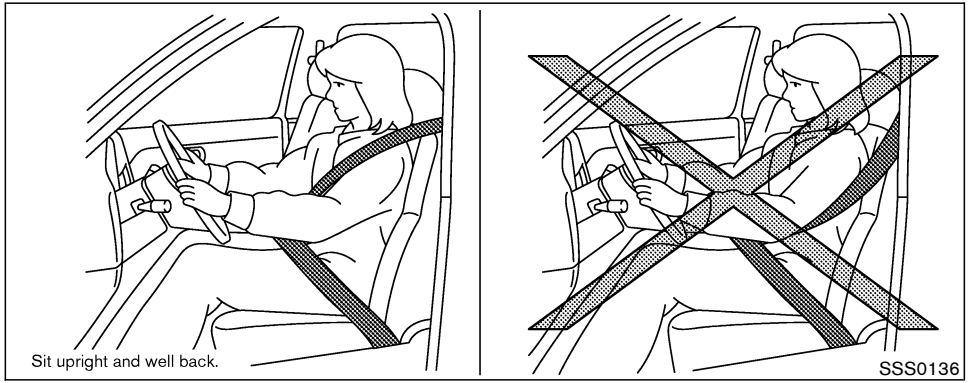

WARNING

- **Every person who drives or rides in this vehicle should use a seat belt at all times.**
- **The seat belt should be properly adjusted to a snug fit. Failure to do so may reduce the effectiveness of the entire restraint system and increase the chance or severity of injury in an accident. Serious injury or death can occur if the seat belt is not worn properly.**
- **Always route the shoulder belt over your shoulder and across your chest. Never run the belt behind your back, under your arm or across your neck. The belt should be away from your face and neck, but not falling off your shoulder.**
- **Position the lap belt as low and snug as possible AROUND THE HIPS, NOT THE WAIST. A lap belt worn too high could increase the risk of internal injuries in an accident.**
- **Be sure the seat belt tongue is securely fastened to the proper buckle.**
- **Do not wear the seat belt inside out or twisted. Doing so may reduce its effectiveness.**
- **Do not allow more than one person to use the same seat belt.**
- **Never carry more people in the vehicle than there are seat belts. This vehicle has only two seating positions. Never allow anyone to ride in the luggage area.**
- **If the seat belt warning light glows continuously while the ignition is turned ON with all doors closed and all seat belts fastened, it may indicate a malfunction in the system. Have the system checked by a NISSAN dealer.**

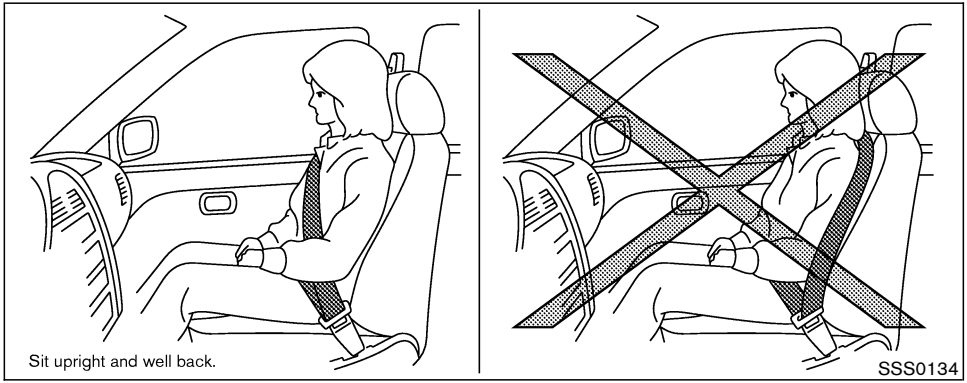

- **Once the pre-tensioner seat belt has activated, it cannot be reused and must be replaced together with the retractor. See a NISSAN dealer.**
- **Removal and installation of the pre-tensioner seat belt system components should be done by a NISSAN dealer.**
- **All seat belt assemblies, including retractors and attaching hardware, should be inspected after any collision by a NISSAN dealer. NISSAN recommends that all seat belt assemblies in use during a collision be replaced unless the collision was minor and the belts show no damage and continue to operate properly. Seat belt assemblies not in use during a collision should also be inspected and replaced if either damage or improper operation is noted.**

CHILD SAFETY

Children need adults to help protect them. They need to be properly restrained.

In addition to the general information in this manual, child safety information is available from many other sources, including doctors, teachers, government traffic safety offices, and community organizations. Every child is different, so be sure to learn the best way to transport your child.

There are three basic types of child restraint systems:

- Rear facing child restraint (should not be installed in this vehicle)
- Front facing child restraint (should not be installed in the Roadster models)
- Booster seat

WARNING

- **Never let an infant who requires the use of a rear facing child restraint ride in this vehicle. Do not attempt to hold a child in your lap or arms.**
- **Roadster models do not have an anchor for a top tether strap required**

for most front facing child restraints. Never let children who require the use of a front facing child restraint ride in Roadster models.

- **Children need special protection. The vehicle's seat belts may not fit them properly. The shoulder belt may come too close to the face or neck. The lap belt may not fit over their small hip bones. In an accident, an improperly fitting seat belt could cause serious or fatal injury. Always use appropriate child restraints.**
- **Never let a child stand or kneel on any seat and do not allow a child in the cargo areas while the vehicle is moving. The child could be seriously injured or killed in an accident or sudden stop.**

Your vehicle is equipped with a supplemental front impact air bag system for the front passenger. See "Supplemental restraint system" later in this section. The passenger seat is not suitable for use with a rear facing child restraint needed for infants. Therefore, infants should not be transported in this vehicle.

All US states and provinces of Canada require the use of approved child restraints for infants and small children. (See "Child restraints" later in this section.)

Also, there are other types of child restraints available for larger children for additional protection.

Infants

Infants up to at least 1 year old should be placed in a rear facing child restraint. Because a rear facing child restraint is not suitable for use in this vehicle, infants should not be transported in it.

Small children

Children that are over 1 year old and weigh at least 20 lbs (9 kg) can be placed in a forward facing child restraint (except Roadster models). Refer to the manufacturer's instructions for minimum and maximum weight and height recommendations. NISSAN recommends that small children be placed in child restraints that comply with Federal Motor Vehicle Safety Standards or Canadian Motor Vehicle Safety Standards. You should choose a child restraint that fits your vehicle and always follow the manufacturer's instructions for installation and use.

Larger children

Children who are too large for child restraint systems should be seated and restrained by the seat belts which are provided. The seat belt may not fit properly if the child is less than 4 ft 9 in (142.5 cm) tall and weighs between 40 lbs (18 kg) and 80 lbs (36 kg). A booster seat should be used to obtain proper seat belt fit.

NISSAN recommends that a child be placed in a commercially available booster seat if the shoulder belt in the child's seating position fits close to the face or neck or if the lap portion of the seat belt goes across the abdomen. The booster seat should raise the child so that the shoulder belt is properly positioned across the top, middle portion of the shoulder and the lap belt is low on the hips. A booster seat can only be used in seating positions that have a three-point type seat belt. The booster seat should fit the vehicle seat and have a label certifying that it complies with Federal Motor Vehicle Safety Standards or Canadian Motor Vehicle Safety Standards. Once the child has grown so the shoulder belt is no longer on or near the face and neck, use the shoulder belt without the booster seat.

PREGNANT WOMEN

NISSAN recommends that pregnant women use seat belts. The seat belt should be worn snug, and always position the lap belt as low as

possible around the hips, not the waist. Place the shoulder belt over your shoulder and across your chest. Never run the lap/shoulder belt over your abdominal area. Contact your doctor for specific recommendations.

INJURED PERSONS

NISSAN recommends that injured persons use seat belts, depending on the injury. Check with your doctor for specific recommendations.

THREE-POINT TYPE SEAT BELT WITH RETRACTOR

WARNING

- **Every person who drives or rides in this vehicle should use a seat belt at all times.**
- **Do not ride in a moving vehicle when the seatback is reclined. This can be dangerous. The shoulder belt will not be against your body. In an accident, you could be thrown into it and receive neck or other serious injuries. You could also slide under the lap belt and receive serious internal injuries.**
- **For the most effective protection when the vehicle is in motion, the seat should be upright. Always sit well back in the seat with both feet on the floor and adjust the seat belt properly.**

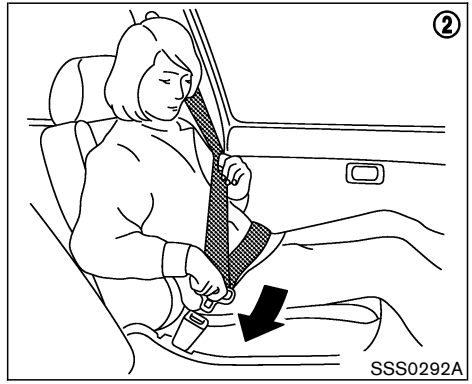

Fastening the seat belts

1. Adjust the seat. See “Seats” earlier in this section.
2. Slowly pull the seat belt out of the retractor and insert the tongue into the buckle until it clicks.

- **The retractor is designed to lock during a sudden stop or on impact. A slow pulling motion will permit the belt to move, and allow you some freedom of movement in the seat.**
- **If the seat belt cannot be pulled from its fully retracted position, firmly pull the**

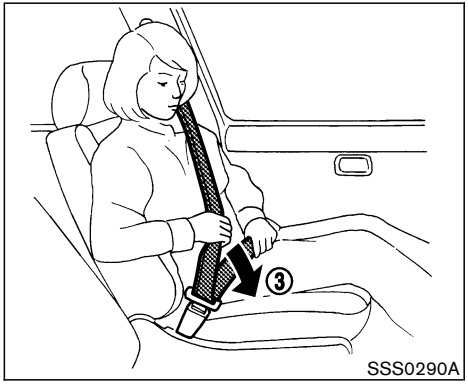

belt and release it. Then smoothly pull the belt out of the retractor.

3. Position the lap belt portion **low and snug on the hips** as shown.
4. Pull the shoulder belt portion toward the retractor to take up extra slack. Be sure the shoulder belt is routed over your shoulder and across your chest.

The front passenger seat belt has a locking mechanism for child restraint installation. It is referred to as the automatic locking mode.

When the locking mechanism is activated the seat belt cannot be extended again until the seat belt tongue is detached from the buckle and fully retracted. For additional information, see “Child restraints” later in this section.

The automatic locking mode should be used only for child restraint installation. During normal seat belt use by a passenger, the locking mode should not be activated. If it is activated it may cause uncomfortable seat belt tension.

WARNING

When fastening the seat belts, be certain that the seatbacks are completely secured in the latched position. If they are not completely secured, passengers may be injured in an accident or sudden stop.

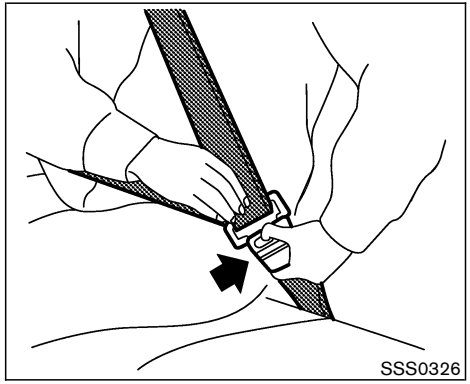

Unfastening the seat belts

To unfasten the belt, push the button on the buckle. The seat belt will automatically retract.

Checking seat belt operation

Your seat belt retractors are designed to lock belt movement using two separate methods:

- when the belt is pulled quickly from the retractor.
- when the vehicle slows down rapidly.

You can check their operation as follows:

- grasp the shoulder belt and pull quickly for-

ward. The retractor should lock and restrict further belt movement.

If the retractor does not lock during this check or if you have any questions about belt operation, see a NISSAN dealer.

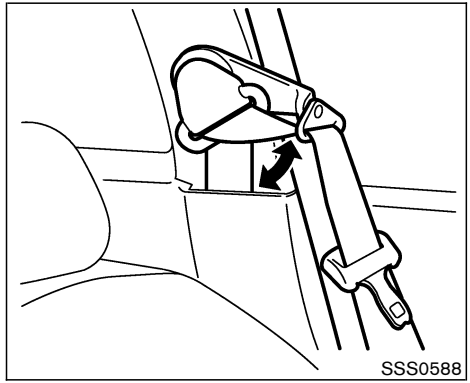

Shoulder belt arm

The shoulder belt arm should be adjusted to the position best for you. (See “Precautions on seat belt usage” earlier in this section.)

To adjust, pull the shoulder belt arm. Pulling the arm forward will allow an easy access to the belt.

SEAT BELT EXTENDERS

If, because of body size or driving position, it is not possible to properly fit the lap-shoulder belt and fasten it, an extender is available. The extender adds approximately 8 in (200 mm) of length and may be used for either the driver or passenger seating position. See a NISSAN dealer for assistance if the extender is required.

WARNING

- **Only NISSAN seat belt extenders, made by the same company which made the original equipment seat belts, should be used with NISSAN seat belts.**
- **Persons who can use the standard seat belt should not use an extender. Such unnecessary use could result in serious personal injury in the event of an accident.**
- **Never use seat belt extenders to install child restraints. If the child restraint is not secured properly, the child could be seriously injured in a collision or a sudden stop.**

SEAT BELT MAINTENANCE

- **To clean the seat belt webbings,** apply a mild soap solution or any solution recommended for cleaning upholstery or carpets. Then brush the webbing, wipe it with a cloth and allow it to dry in the shade. Do not allow

the seat belts to retract until they are completely dry.

- If dirt builds up in the shoulder belt guide of the seat belt anchors, the seat belts may retract slowly. Wipe the shoulder belt guide with a clean, dry cloth.
- **Periodically check to see that the seat belt and the metal components** such as buckles, tongues, retractors, flexible wires and anchors work properly. If loose parts, deterioration, cuts or other damage on the webbing is found, the entire belt assembly should be replaced.

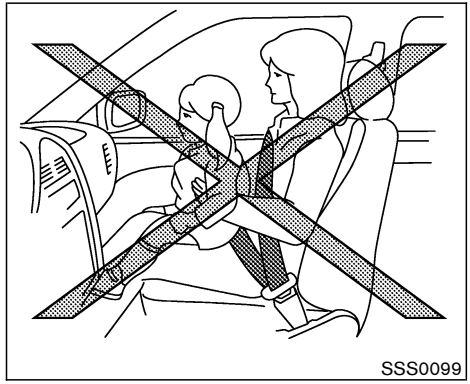

PRECAUTIONS ON CHILD RESTRAINTS

WARNING

- **Children should always be placed in an appropriate child restraint while riding in the vehicle. Failure to use a child restraint can result in serious injury or death.**
- **Children should never be carried on your lap. It is not possible for even the strongest adult to resist the forces of a severe accident. The child could be crushed between the adult and parts of the vehicle. Also, do not put the same seat belt around both your child and yourself.**

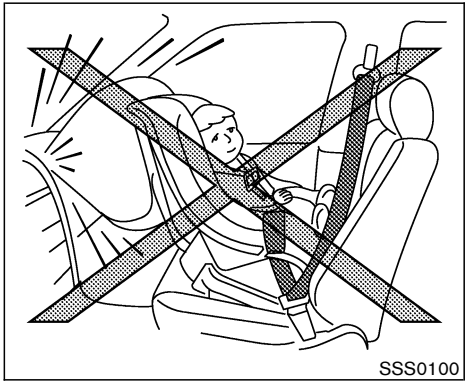

- Even with the NISSAN Advanced Air Bag System, never install a rear-facing child restraint in the front seat. An inflating supplemental air bag could seriously injure or kill your child.
- Never let an infant who requires the use of a rear facing child restraint ride in this vehicle.
- Roadster models do not have an anchor for a top tether strap required for most front facing child restraints. Never let children who require the use of a front facing child restraint ride in Roadster models.
- Improper use or improper installation of a child restraint can increase the risk or severity of injury for both the child and other occupants of the vehicle and can lead to serious injury or death in an accident.
- Follow all of the child restraint manufacturer's instructions for installation and use. When purchasing a child restraint, be sure to select one which will fit your child and vehicle. It may not be possible to properly install some types of child restraints in your vehicle.
- If the child restraint is not anchored properly, the risk of a child being injured in a collision or a sudden stop greatly increases.
- Child restraint anchor point is designed to withstand only those loads imposed by correctly fitted child restraint. Under no circumstances is it to be used for adult seat belts or harnesses.
- Adjustable seatbacks should be positioned to fit the child restraint, but as upright as possible.
- After attaching the child restraint, test it before you place the child in it. Push it from side to side while holding the seat by the seat belt path. Try to tug it forward and check to see if the belt holds the restraint in place. The child restraint should not move more than 1 in (25 mm). If the restraint is not secure, tighten the belt as necessary, or put the restraint in another seating position and test it again. You may need to try a different child restraint. Not all child restraints fit in all types of vehicles.
- When your child restraint is not in use, keep it secured with a seat belt to prevent it from being thrown around in case of a sudden stop or accident.

CAUTION

- **For Roadster models, when installing a booster seat, be sure to turn off the automatic passenger seatback tilt function with the seatback tilt cancel switch (located on the back of the passenger seatback). Otherwise, the booster seat may be damaged. See "Tilting and reclining passenger's seat from driver's seat" earlier in this section for detailed information.**
- **Remember that a child restraint left in a closed vehicle can become very hot. Check the seating surface and buckles before placing your child in the child restraint.**

In general, child restraints are designed to be installed with the lap portion of a lap/shoulder seat belt.

Several manufacturers offer child restraints for children of various sizes. When selecting any child restraint, keep the following points in mind:

- Choose only a restraint with a label certifying that it complies with Federal Motor Vehicle Safety Standard 213 or Canadian Motor Vehicle Safety Standard 213.
- Check the child restraint in your vehicle to be sure it is compatible with the vehicle's seat and seat belt system.
- If the child restraint is compatible with your vehicle, place your child in the child restraint and check the various adjustments to be sure the child restraint is compatible with your child. Choose a child restraint that is designed for your child's height and weight. Always follow all recommended procedures.

The passenger seat is not suitable for use with a rear facing child restraint for infants. Therefore, infants should not be transported in this vehicle.

All U.S. states and Canadian provinces or territories require that infants and small children be restrained in approved child restraint at all times while the vehicle is being operated.

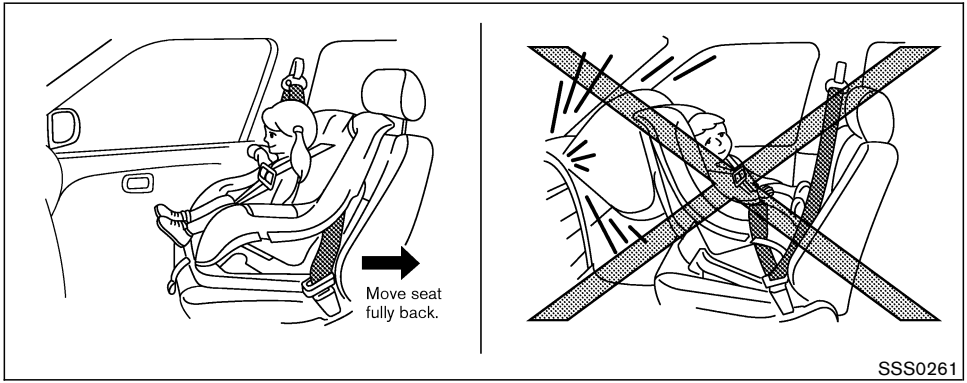

- **The three-point seat belt in your vehicle is equipped with an automatic locking mode retractor which must be used when installing a child restraint.**
- **Failure to use the retractor's locking mode will result in the child restraint not being properly secured. The restraint could tip over or otherwise be unsecured and cause injury to the child in a sudden stop or collision.**

CHILD RESTRAINT INSTALLATION ON FRONT PASSENGER SEAT (Coupe models only)

WARNING

- **Even with the NISSAN Advanced Air Bag System, never install a rear-facing child restraint in the front passenger seat. Supplemental front air bags inflate with great force. A rear-facing child restraint could be struck by the supplemental front air bag in a crash and could seriously injure or kill your child.**
- **If you must install a forward facing child restraint in the front passenger seat, move the passenger seat to the rearmost position. Also, be sure the front passenger air bag status light is illuminated to indicate the passenger air bag is OFF. See "Front passenger air bag and status light" in this section for details.**

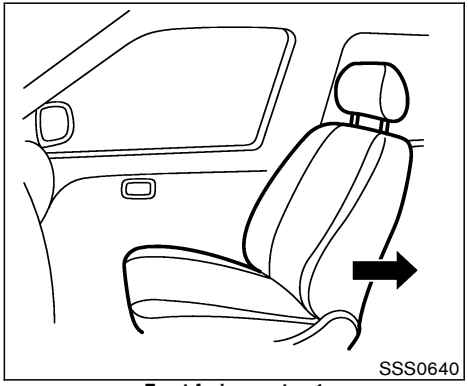

Front facing — step 1

Front facing

If you must install a child restraint in the front seat, follow these steps:

1. Position the child restraint on the front passenger seat. **Move the seat to the rearmost position.** Adjust the head restraint to its highest position (if so equipped). Always follow the restraint manufacturer's instructions.

   The back of the child restraint should be secured against the vehicle seatback. If necessary, adjust or remove the head restraint to obtain the correct child restraint fit. See "Head restraint adjustment" earlier in this section. If the head restraint is removed, store it in a secure place. Be sure to install the head restraint when the child restraint is removed. If the seating position does not have an adjustable head restraint and it is interfering with the proper child restraint fit, try a different child restraint.

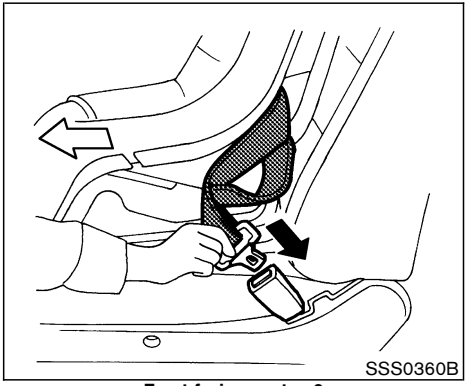

Front facing — step 2

2. Route the seat belt tongue through the child restraint and insert it into the buckle until you hear and feel the latch engage. Be sure to follow the child restraint manufacturer's instructions for belt routing.

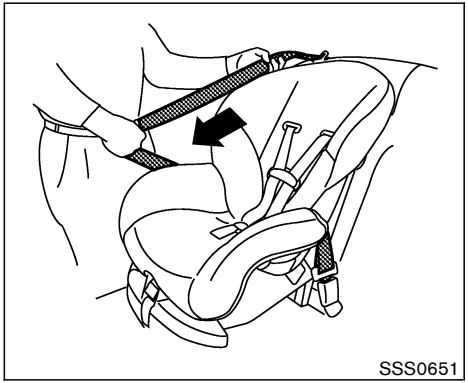

Front facing — step 3

3. Pull the shoulder belt until the belt is fully extended. At this time, the seat belt retractor is in the automatic locking mode (child restraint mode). It reverts to emergency locking mode when the seat belt is fully retracted.

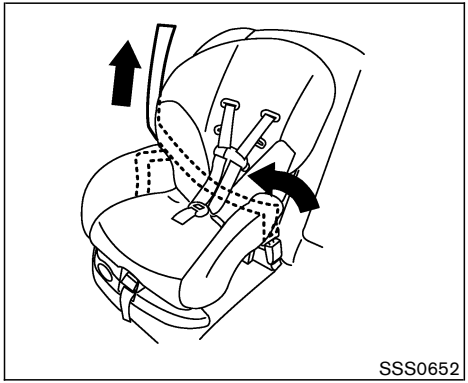

Front facing — step 4

4. Allow the seat belt to retract. Pull up on the shoulder belt to remove any slack in the belt.

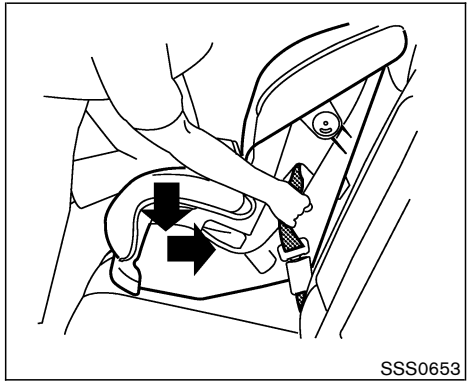

Front facing — step 5

5. Remove any additional slack from the seat belt; press downward and rearward firmly in the center of the child restraint with your knee to compress the vehicle seat cushion and seatback while pulling up on the seat belt.

6. If the child restraint is equipped with a top tether strap, route the top tether strap and secure the tether strap to the tether anchor point. See “Top tether strap child restraint” in this section.

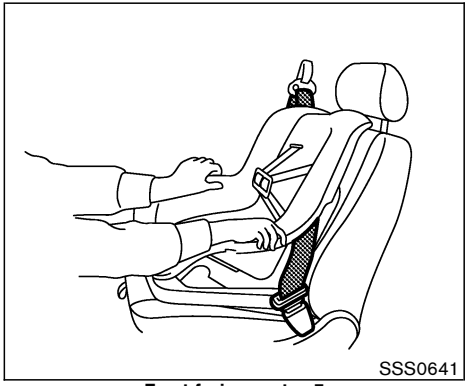

Front facing — step 7

7. Before placing the child in the child restraint, hold the child restraint near the seat belt path and use force to push the child restraint from side to side, and tug it forward to make sure that it is securely held in place. It should not move more than 1 in (25 mm). If it does move more than 1 in (25 mm), pull again on the shoulder belt to further tighten the child restraint. If you are unable to properly secure the restraint, try a different child restraint. Not all child restraints fit in all types of vehicles.

8. Check that the retractor is in the automatic locking mode by trying to pull more seat belt out of the retractor. If you cannot pull any more belt webbing out of the retractor, the retractor is in the automatic locking mode.

9. Check to make sure the child restraint is properly secured prior to each use. If the seat belt is not locked, repeat steps 2 through 7.

Front facing — step 10

10. Turn the ignition switch to the ON position. The front passenger air bag status light PASS AIR BAG OFF 2 should illuminate. If this light is not illuminated, see “Front passenger air bag and status light” in this section. Try a different child restraint. Have the system checked by a NISSAN dealer.

After the child restraint is removed and the seat belt is fully retracted, the automatic locking mode (child restraint mode) is canceled.

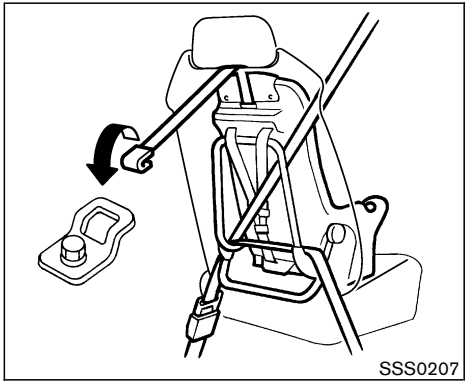

TOP TETHER STRAP CHILD RESTRAINT (Coupe models only)

An anchor for a child restraint with a top tether is provided in this vehicle.

If your child restraint has a top tether strap, it must be secured to the provided anchor point. Secure the child restraint with the seat belt. Guide the top tether strap under the head restraint as illustrated, and secure it to the anchor bracket. Tighten the strap according to manufacturer instructions to remove any slack.

WARNING

Child restraint anchor point is designed to withstand only those loads imposed by correctly fitted child restraints. Under no circumstance is it to be used for adult seat belts or harnesses.

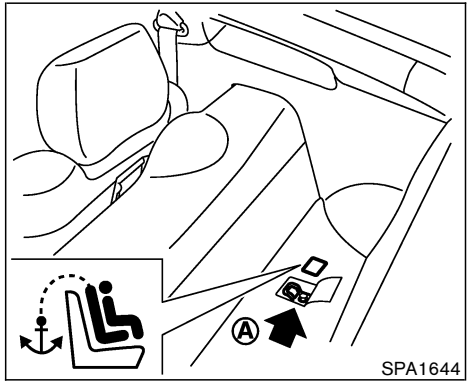

Anchor point location

The anchor point (A) is located on the luggage area floor.

A flap is provided in the carpet for easy access and is marked with the label shown.

If you have any questions when installing a top tether strap child restraint on the passenger seat, consult a NISSAN dealer for details.

BOOSTER SEATS

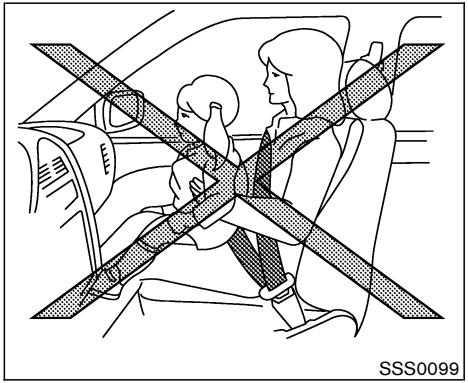

PRECAUTIONS ON BOOSTER SEATS

WARNING

- **Children should always be placed in an appropriate child restraint while riding in the vehicle. Failure to use a child restraint or booster seat can result in serious injury or death.**
- **Children should never be carried on your lap. It is not possible for even the strongest adult to resist the forces of a severe accident. The child could be crushed between the adult and parts of the vehicle. Also, do not put the same seat belt around both your child and yourself.**
- **A booster seat must only be installed in a seating position that has a lap/shoulder belt. Failure to use a three-point type seat belt with a booster seat can result in a serious injury in sudden stop or collision.**
- **Improper use or improper installation of a booster seat can increase the risk or severity of injury for both the child and other occupants of the vehicle and can lead to serious injury or death in an accident.**
- **Do not use towels, books, pillows or other items in place of a booster seat. Items such as these may move during normal driving or a collision and result in serious injury or death. Booster seats are designed to be used with a lap/shoulder belt. Booster seats are designed to properly route the lap and shoulder portions of the seat belt over the strongest portions of a child's body to provide the maximum protection during a collision.**
- **Follow all of the booster seat manufacturer's instructions for installation and use. When purchasing a booster seat, be sure to select one which will fit your child and vehicle. It may not be possible to properly install some types of booster seats in your vehicle.**
- **If the booster seat and seat belt are not used properly, the risk of a child being injured in a collision or a sudden stop greatly increases.**
- **Adjustable seatbacks should be positioned to fit the booster seat, but as upright as possible.**
- **After placing the child in the booster seat and fastening the seat belt, make sure the shoulder portion of**

the belt is away from the child's face and neck and the lap portion of the belt does not cross the abdomen.

- **Do not put the shoulder belt behind the child or under the child's arm. If you must install a booster seat in the front seat, see "Booster seat installation on front passenger seat" later in this section.**
- **When your booster seat is not in use, keep it secured with a seat belt to prevent it from being thrown around in case of a sudden stop or accident.**

CAUTION

- **For Roadster models, when installing a booster seat, be sure to turn off the automatic passenger seatback tilt function with the seatback tilt cancel switch (located on the back of the passenger seatback). Otherwise, the booster seat may be damaged. See "Tilting and reclining passenger's seat from driver's seat" earlier in this section for detailed information.**
- **Remember that a booster seat left in a closed vehicle can become very hot. Check the seating surface and buckles before placing your child in the booster seat.**

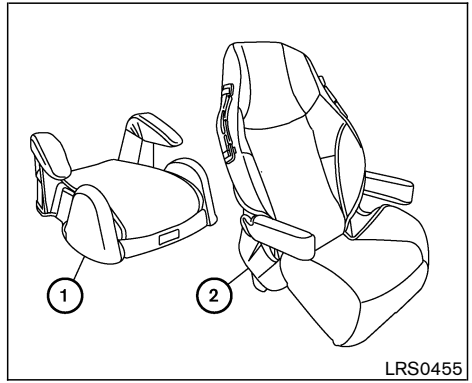

Booster seats of various sizes are offered by several manufacturers. When selecting any booster seat, keep the following points in mind:

- Choose only a booster seat with a label certifying that it complies with Federal Motor Vehicle Safety Standard 213 or Canadian Motor Vehicle Safety Standard 213.

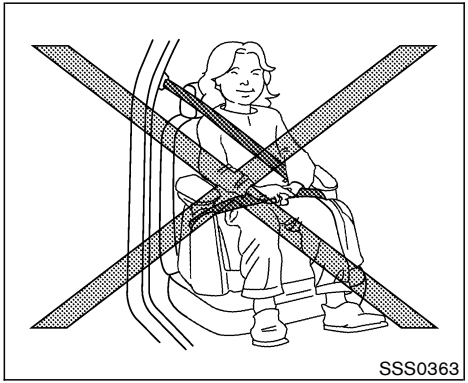
SSS0363

- Check the booster seat in your vehicle to be sure it is compatible with the vehicle's seat and seat belt system.
- Make sure the child's head will be properly supported by the booster seat or vehicle seat. The seatback must be at or above the center of the child's ears. For example, if a low back booster seat (1) is chosen, the vehicle seatback must be at or above the center of the child's ears. If the seatback is lower than the center of the child's ears, a high back booster seat (2) should be used.

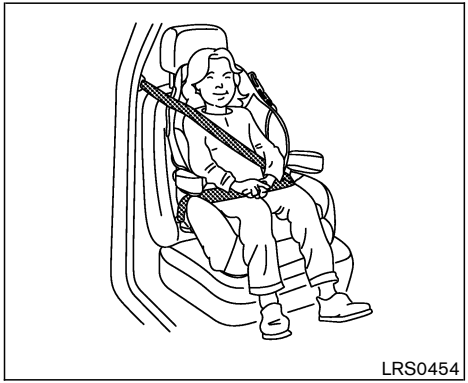
LRS0454

- If the booster seat is compatible with your vehicle, place your child in the booster seat and check the various adjustments to be sure the booster seat is compatible with your child. Always follow all recommended procedures.

All U.S. states and Canadian provinces or territories require that infants and small children be restrained in an approved child restraint at all times while the vehicle is being operated.

BOOSTER SEAT INSTALLATION ON FRONT PASSENGER SEAT

CAUTION

Do not use the lap/shoulder belt automatic locking mode when using a booster seat with the seat belts.

Follow these steps to install a booster seat in the front passenger seat:

If you must install a booster seat in the front passenger seat, move the passenger seat to the rearmost position.

1. Turn the seatback tilt cancel switch to the CANCEL position. (Roadster models only)
2. Position the booster seat on the seat. Only place it in a front facing direction. Always follow the booster seat manufacturer's instructions.

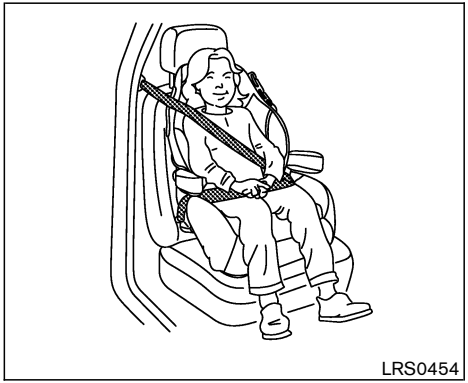

3. The booster seat should be positioned on the vehicle seat so that it is stable. If necessary, adjust or remove the head restraint to obtain the correct booster seat fit. See “Head restraint adjustment” earlier in this section. If the head restraint is removed, store it in a secure place. Be sure to install the head restraint when the booster seat is removed. If the seating position does not have an adjustable head restraint and it is interfering with the proper booster seat fit, try a different booster seat.
4. Position the lap portion of the seat belt low and snug on the child’s hips. Be sure to follow the booster seat manufacturer’s instructions for adjusting the belt routing.
5. Pull the shoulder belt portion of the seat belt toward the retractor to take up extra slack. Be sure the shoulder belt is positioned across the top, middle portion of the child’s shoulder. Be sure to follow the booster seat manufacturer’s instructions for adjusting the belt routing.
6. Follow the warnings, cautions and instructions for properly fastening a seat belt shown in the “Three-point type seat belt with retractor” earlier in this section.
7. If the booster seat is installed in the front passenger seat, turn the ignition switch to the ON position. The front passenger air bag status light PASS AIR BAG OFF may or may not illuminate depending on the size of the child and the type of booster seat used. See “Front passenger air bag and status light” later in this section.

SUPPLEMENTAL RESTRAINT SYSTEM

PRECAUTIONS ON SUPPLEMENTAL RESTRAINT SYSTEM

This Supplemental Restraint System (SRS) section contains important information concerning the driver and passenger supplemental front impact air bags (NISSAN Advanced Air Bag System), supplemental side-impact air bags, curtain side-impact air bags and pre-tensioner seat belts.

Supplemental front-impact air bag system: NISSAN advanced air bag system can help cushion the impact force to the head and chest of the driver and front passenger in certain frontal collisions.

Supplemental side-impact air bag system (if so equipped): This system can help cushion the impact force to the chest area of the driver and front passenger in certain side impact collisions. The front seat side-impact supplemental air bags are designed to inflate on the side where the vehicle is impacted.

Supplemental curtain side-impact air bag system (if so equipped for Coupe models): This system can help cushion the impact force to the head of occupants in certain side impact collisions. The curtain side-impact air bags are designed to inflate on the side where the vehicle is impacted.

The supplemental restraint system is designed to **supplement** the crash protection provided by the driver and passenger seat belts and is **not a substitute** for them. Seat belts should always be correctly worn and the occupant seated a suitable distance away from the steering wheel, instrument panel, door finishers and side roof rails. (See “Seat belts” earlier in this section for instructions and precautions on seat belt usage.)

The supplemental air bags operate only when the ignition switch is in the ON or START position.

After turning the ignition key to the ON position, the supplemental air bag warning light illuminates. The supplemental air bag warning light will turn off after about 7 seconds if the systems are operational.

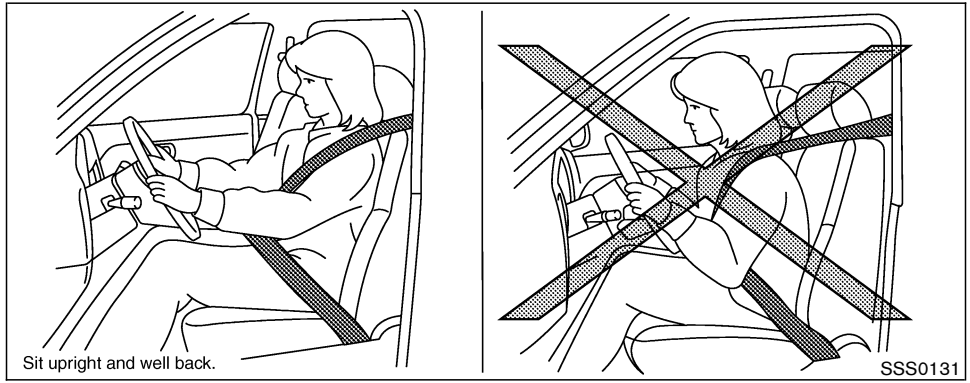

WARNING

- **The supplemental front air bags ordinarily will not inflate in the event of a side impact, rear impact, rollover, or lower severity frontal collision. Always wear your seat belts to help reduce the risk or severity of injury in various kinds of accidents.**
- **The front passenger air bag will not inflate if the passenger air bag status light is lit or if the front passenger seat is unoccupied. See “Front passenger air bag and status light” later in this section.**
- **The seat belts and the supplemental front air bags are most effective when you are sitting well back and upright in the seat with both feet on the floor. The front air bags inflate with great force. Even with the NISSAN advanced air bag system, if you are unrestrained, leaning for-**

ward, sitting sideways or out of position in any way, you are at greater risk of injury or death in a crash. You may also receive serious or fatal injuries from the supplemental front air bag if you are up against it when it inflates. Always sit back against the seatback and as far away as practical from the steering wheel or instrument panel. Always use the seat belts.

- The driver and front passenger seat belt buckles are equipped with sensors that detect if the seat belts are fastened. The advanced air bag system monitors the severity of a collision and seat belt usage then inflates the air bags. Failure to properly wear seat belts can increase the risk or severity of injury in an accident.
- The front passenger seat is equipped with an occupant classification sensor (pattern sensor) that turns the front passenger air bag OFF under some conditions. This sensor is only used in this seat. Failure to be properly seated and wearing the seat belt can increase the risk or severity of injury in an accident. See “Front Passenger air bag and status light” later in this section.
- Keep hands on the outside of the steering wheel. Placing them inside the steering wheel rim could increase the risk that they are injured when the supplemental front air bag inflates.

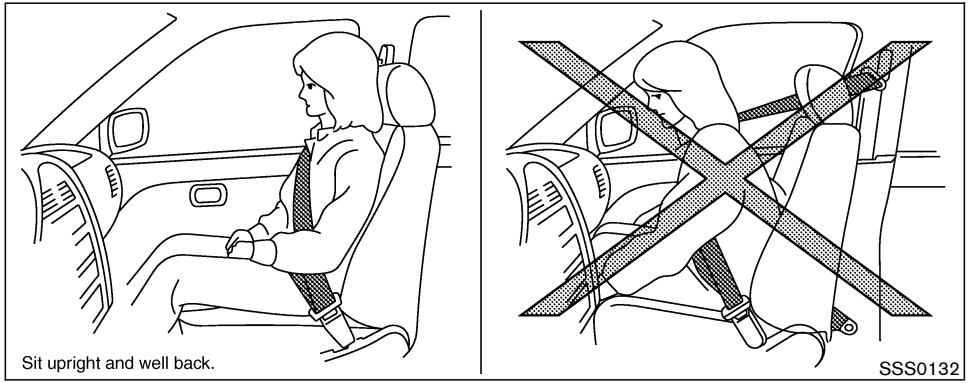
Sit upright and well back.
SSS0132

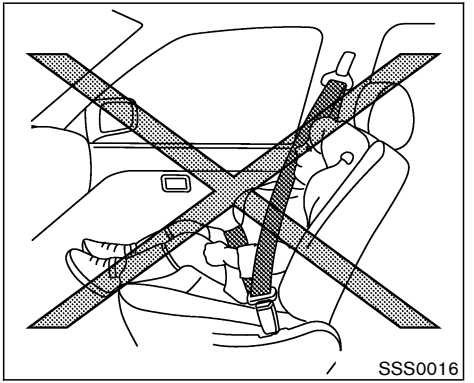
SSS0016

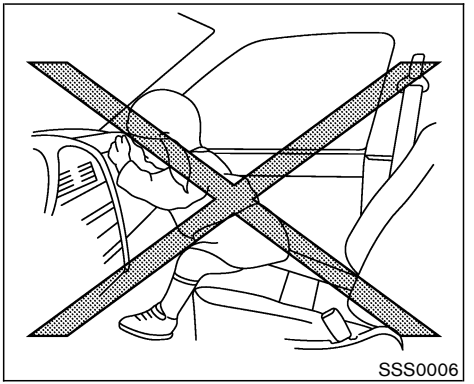
SSS0006

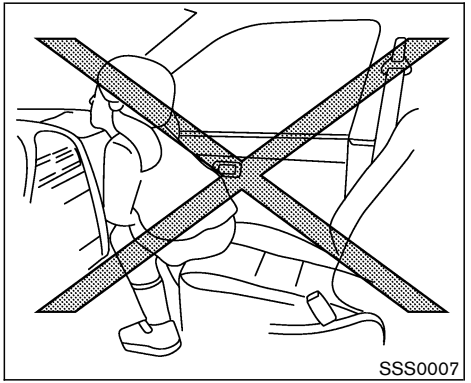
SSS0007

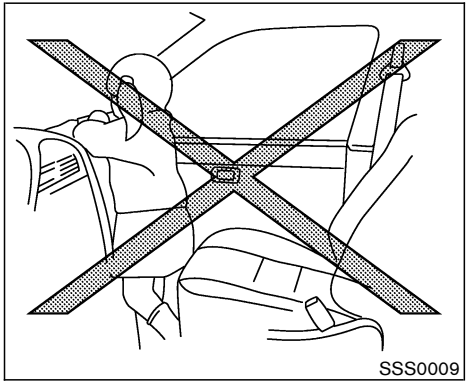
SSS0009

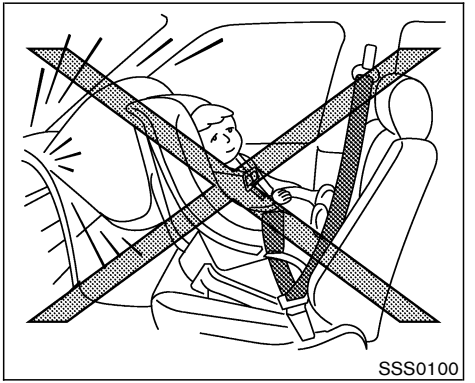
SSS0100

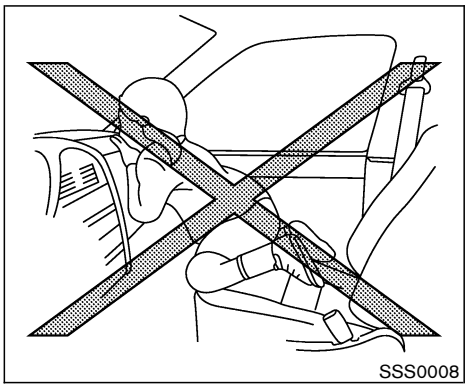
SSS0008

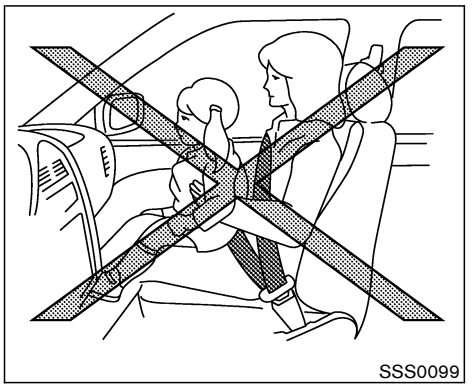
SSS0099

WARNING

- **Never let an infant who requires the use of a rear facing child restraint ride in this vehicle. Do not attempt to hold a child in your lap or arms. Some examples of dangerous riding positions are shown in the previous illustrations.**
- **Roadster models do not have an anchor for a top tether strap required**

for most front facing child restraints. Never let children who require the use of a front facing child restraint ride in Roadster models.

- Children may be severely injured or killed when the supplemental front air bags or side air bags or curtain side-impact air bags inflate if they are not properly restrained.
- Even with the NISSAN Advanced Air Bag System, never install a rear-facing child restraint in the front seat. An inflating supplemental front air bag could seriously injure or kill your child. See “Child restraints” earlier in this section for details.

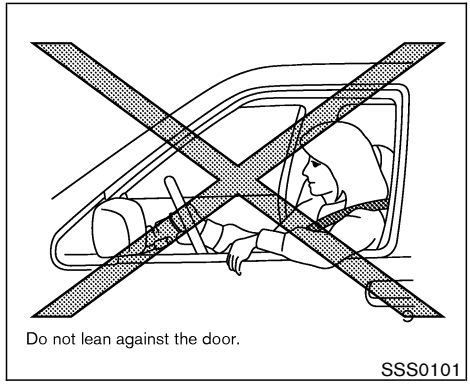
Do not lean against the door.
SSS0101

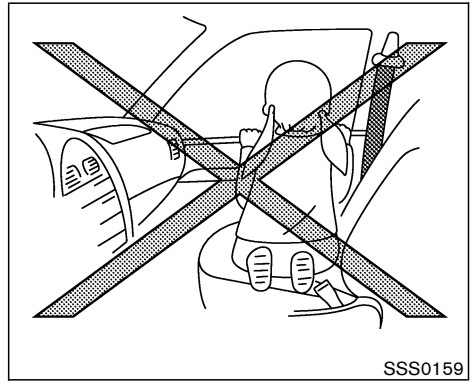
SSS0159

WARNING

Supplemental side air bag and curtain side-impact air bag (if so equipped):

- The supplemental side air bag and curtain side-impact air bag ordinarily will not inflate in the event of a frontal impact, rear impact, rollover or lower severity side collision. Always wear your seat belts to help reduce the risk or severity of injury in various kinds of accidents.
- The seat belts, the supplemental side air bags and curtain side-impact air bags are most effective when you are sitting well back and upright in the seat. The side air bag and curtain side-impact air bag inflate with great force. Do not allow anyone to place their hand, leg or face near the side air bag on the side of the seatback of the front seat or near the side roof rails. Do not allow anyone sitting in the front seat to extend their hand

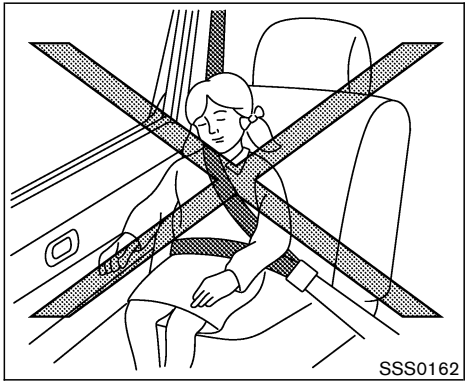

out of the window or lean against the door. Some examples of dangerous riding positions are shown in the previous illustrations.

- **Do not use seat covers on the front seatbacks. They may interfere with supplemental side air bag inflation.**

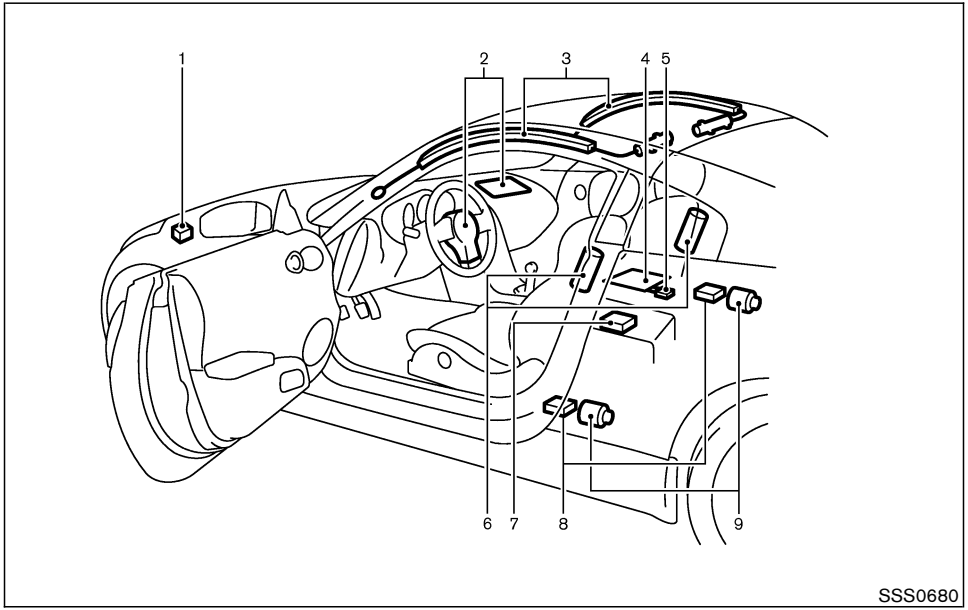

1. Crash zone sensor
2. Supplemental front air bag modules
3. Supplemental curtain side-impact air bag modules (if so equipped for Coupe models)
4. Occupant classification sensor (pattern sensor)
5. Occupant classification system control unit
6. Supplemental side air bag modules (if so equipped)

7. Diagnosis sensor unit
8. Satellite sensors
9. Seat belt pre-tensioner retractor

NISSAN advanced air bag system

This vehicle is equipped with the NISSAN advanced air bag system for the driver and front passenger seats. This system is designed to meet certification requirements under U.S. regulations. It is also permitted in Canada. **However, all of the information, cautions and warnings in this manual still apply and must be followed.**

The driver supplemental front air bag is located in the center of the steering wheel. The front passenger supplemental front air bag is mounted in the instrument panel. The supplemental front air bags are designed to inflate in higher severity frontal collisions, although they may inflate if the forces in another type of collision are similar to those of a higher severity frontal impact. They may not inflate in certain frontal collisions. Vehicle damage (or lack of it) is not always an indication of proper supplemental air bag system operation.

The NISSAN advanced air bag system has dual stage air bag inflators. It also monitors information from the crash zone sensor, the diagnosis sensor unit, seat belt buckle sensors and the occupant classification sensor (pattern sensor). Inflator operation is based on the severity of a collision and seat belt usage for the driver. For the front passenger, the occupant classification sensor is also monitored. Based on information from the sensors, only one front air bag may inflate in a crash, depending on the crash severity and whether the front occupants are belted or unbelted. Additionally, the front passenger air bag may be automatically turned OFF under some conditions, depending on the information provided by the occupant classification sensor. If the front passenger air bag is OFF, the passenger air bag status light will be illuminated (if the seat is unoccupied, the light will not be illuminated, but the air bag will be off.). See “Front passenger air bag and status light” later in this section for further details. One front air bag inflating does not indicate improper performance of the system.

If you have any questions about your air bag system, contact NISSAN or a NISSAN dealer. If you are considering modifications of your vehicle due to a disability, you may also contact NISSAN. Contact information is contained in the front of this Owner’s Manual.

When a front air bag inflates, a fairly loud noise may be heard, followed by release of smoke. This smoke is not harmful and does not indicate a fire. Care should be taken not to inhale it, as it may cause irritation and choking. Those with a history of a breathing condition should get fresh air promptly.

Supplemental front air bags, along with the use of seat belts, help to cushion the impact force on the head and chest of the front occupants. They can help save lives and reduce serious injuries. However, an inflating front air bag may cause facial abrasions or other injuries. Front air bags do not provide restraint to the lower body.

Even with NISSAN advanced air bags, seat belts should be correctly worn and the driver and passenger seated upright as far as practical away from the steering wheel or instrument panel. The supplemental front air bags inflate quickly in order to help protect the front occupants. Because of this, the force of the front air bag inflating can increase the risk of injury if the occupant is too close to, or is against, the air bag module during inflation.

The air bag will deflate quickly after a collision.

The supplemental front air bags operate only when the ignition switch is in the ON or START position.

After turning the ignition key to the ON position, the supplemental air bag warning light illuminates. The supplemental air bag

warning light will turn off after about 7 seconds if the system is operational.

Front passenger air bag status light

Front passenger air bag and status light

WARNING

The front passenger air bag is designed to automatically turn OFF under some conditions. Read this section carefully to learn how it operates. Proper use of the seat, seat belt and child restraints is necessary for most effective protection.

Failure to follow all instructions in this manual concerning the use of seats, seat belts and child restraints can increase the risk or severity of injury in an accident.

Status light:

The front passenger air bag status light PASS AIR BAG OFF 2 is located on the overhead console. The light operates as follows:

- Unoccupied passenger seat: The PASS AIR BAG OFF 2 is OFF and the front passenger air bag is OFF and will not inflate in a crash.
- Passenger seat occupied by a small adult, child or child restraint as outlined in this section: The PASS AIR BAG OFF 2 illuminates to indicate that the front passenger air bag is OFF and will not inflate in a crash.
- Occupied passenger seat and the passenger meets the conditions outlined in this section: The PASS AIR BAG OFF 2 is OFF to indicate that the front passenger air bag is operational.

Front passenger air bag:

The front passenger air bag is designed to automatically turn OFF when the vehicle is operated under some conditions as described

below in accordance with U.S. regulations. If the front passenger air bag is OFF, it will not inflate in a crash. The driver air bag and other air bags in your vehicle are not part of this system.

The purpose of the regulation is to help reduce the risk of injury or death from an inflating air bag to certain front passenger seat occupants, such as children, by requiring the air bag to be automatically turned OFF.

The occupant classification sensor (pattern sensor) is in the front passenger seat cushion and is designed to detect an occupant and objects on the seat. For example, if a child is in the front passenger seat, the advanced air bag system is designed to turn the passenger air bag OFF in accordance with the regulations. Also, if a child restraint of the type specified in the regulations is on the seat, the occupant classification sensor can detect it and cause the air bag to turn OFF.

Front passenger seat adult occupants who are properly seated and using the seat belt as outlined in this manual should not cause the passenger air bag to be automatically turned OFF. For small adults it may be turned OFF, however, if the occupant does not sit in the seat properly (for example, by not sitting upright, by sitting on an edge of the seat, or by otherwise being out of position), this could cause the sensor to turn the air bag OFF. Always be sure to be seated and wearing the seat belt properly for the most effective protection by the seat belt and supplemental air bag.

The occupant classification sensor is designed to operate as described above to turn the front passenger air bag OFF for specified child restraints as required by the regulations. Failing to properly secure child restrains and to use the automatic locking mode (child restraint mode) may allow the restraint to tip or move in an accident or sudden stop. This can also result in the passenger air bag inflating in a crash instead of being OFF. See “Child restraints” earlier in this section for proper use and installation.

If the front passenger seat is not occupied, the passenger air bag is designed not to inflate in a crash. However, heavy objects placed on the seat could result in air bag inflation, because of the object being detected by the occupant classification sensor. Other conditions could also result in air bag inflation, such as if a child is standing on the seat, or if two children are on the seat, contrary to the instructions in this manual. Always be sure that you and all vehicle occupants are seated and restrained properly.

Using the passenger air bag status light, you can monitor when the front passenger air bag is automatically turned OFF with the seat occupied. The light will not illuminate when the front passenger seat is unoccupied.

If an adult occupant is in the seat but the passenger air bag status light is illuminated (indicating that the air bag is OFF), it could be that the person is a small adult, or is not sitting on the seat properly.

If a child restraint must be used in the front seat, the passenger air bag status light may or may not be illuminated, depending on the size of the child and the type of child restraint being used. If the air bag status light is not illuminated (indicating that the air bag might inflate in a crash), it could be that the child restraint or seat belt is not being used properly. Make sure that the child restraint is installed properly, the seat belt is used properly and the occupant is positioned properly. If the air bag status light is still not illuminated, try a different child restraint.

If the passenger air bag status light will not illuminate even though you believe that the child restraint, the seat belts and the occupant are properly positioned, the system may be sensing an unoccupied seat (in which case the air bag is OFF). A NISSAN dealer can check that the system is OFF by using a special tool. However, until you have confirmed with your dealer that your air bag is working properly, do not transport a child in this vehicle.

The air bag system and passenger air bag status

light will take a few seconds to register a change in the passenger seat status. However, if the seat becomes unoccupied, the air bag status light will remain off.

If a malfunction occurs in the front passenger air bag system, the supplemental air bag warning light , located in the meter and gauges area, will blink. Have the system checked by a NISSAN dealer.

Other supplemental front air bag precautions

WARNING

- **Do not place any objects on the steering wheel pad or on the instrument panel. Also, do not place any objects between any occupant and the steering wheel or instrument panel. Such objects may become dangerous projectiles and cause injury if the supplemental front air bag inflates.**
- **Do not place objects with sharp edges on the seat. Also, do not place heavy objects on the seat that will leave permanent impressions in the seat. Such objects can damage the seat or occupant classification sensor (pattern sensor). This can affect the operation of the air bag system and result in serious personal injury.**
- **Do not use water or acidic cleaners (hot steam cleaners) on the seat. This can damage the seat or occupant classification sensor. This can also affect the operation of the air bag system and result in serious personal injury.**
- **Immediately after inflation, several front air bag system components will be hot. Do not touch them; you may severely burn yourself.**
- **No unauthorized changes should be made to any components or wiring of the supplemental air bag system. This is to prevent accidental inflation of the supplemental air bag or damage to the supplemental air bag system.**
- **Do not make unauthorized changes to your vehicle's electrical system, suspension system or front end structure. This could affect proper operation of the supplemental front air bag system.**
- **Tampering with the supplemental front air bag system may result in serious personal injury. Tampering includes changes to the steering wheel and the instrument panel assembly by placing material over the steering wheel pad and above the instrument panel or by installing additional trim material around the air bag system.**
- **Modifying or tampering with the front passenger seat may result in serious personal injury. For example, do not change the front seats by placing material on the seat cushion or by installing additional trim material, such as seat covers, on the seat that are not specifically designed to assure proper air bag operation. Addi-**

tionally, do not stow any objects under the front passenger seat or the seat cushion and seatback. Such objects may interfere with the proper operation of the occupant classification sensor.

- **No unauthorized changes should be made to any components or wiring of the seat belt system. This may affect the supplemental front air bag system. Tampering with the seat belt system may result in serious personal injury.**
- **Work on and around the supplemental front air bag system should be done by a NISSAN dealer. Installation of electrical equipment should also be done by a NISSAN dealer. The Supplemental Restraint System (SRS) wiring should not be modified or disconnected. Unauthorized electrical test equipment and probing devices should not be used on the air bag system.**
- **A cracked windshield should be replaced immediately by a qualified repair facility. A cracked windshield could affect the function of the supplemental air bag system.**
- **The SRS wiring harness connectors are yellow and orange for easy identification.**

When selling your vehicle, we request that you inform the buyer about the supplemental front air bag system and guide the buyer to the appropriate sections in this Owner's Manual.

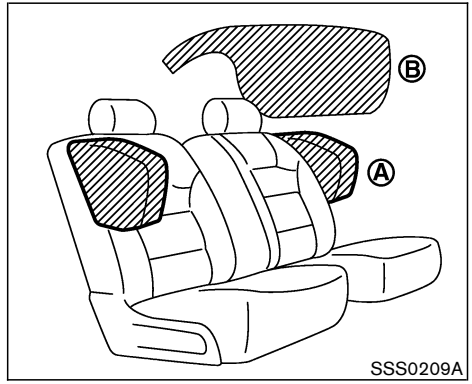

Supplemental side air bag and curtain side-impact air bag system (if so equipped)

This section includes the information about both the supplemental side air bag system (A) and the supplemental curtain side-impact air bag system (B). Curtain side-impact air bags are not available on Roadster models.

The supplemental side air bags are located in the outside of the seatback of the front seats. The supplemental curtain side-impact air bags are located in the side roof rails. These systems are designed to meet voluntary guidelines to help reduce the risk of injury to out-of-position

occupants. **However, all of the information, cautions and warnings in this manual still apply and must be followed.** The supplemental side air bags and curtain side-impact air bags are designed to inflate in higher severity side collisions on the side that the vehicle is impacted, although they may inflate if the forces in another type of collision are similar to those of a higher severity side impact. They are designed to inflate on the side where the vehicle is impacted. They may not inflate in certain side collisions.

Vehicle damage (or lack of it) is not always an indication of proper supplemental side air bag and curtain side-impact air bag operation.

When the supplemental side air bag and curtain side-impact air bag inflate, a fairly loud noise may be heard, followed by release of smoke. This smoke is not harmful and does not indicate a fire. Care should be taken not to inhale it, as it may cause irritation and choking. Those with a history of a breathing condition should get fresh air promptly.

Supplemental side air bags, along with the use of seat belts, help to cushion the impact force on the chest of the front occupants. Curtain side-impact air bags help to cushion the impact force to the head of occupants. They can help save lives and reduce serious injuries. However, an inflating side air bag and curtain side-impact air bag may cause abrasions or other injuries. Supplemental side air bags and curtain side-impact air bags do not provide restraint to the lower body.

The seat belts should be correctly worn and the driver and passenger seated upright as far as practical away from the supplemental side air bag, and seated as far away as practical from the door finishers and side roof rails. The side air bags and curtain side-impact air bag inflate quickly in order to help protect the front occupants. Because of this, the force of the side air bag and curtain side-impact air bag inflating can increase the risk of injury if the occupant is too close to, or is against these air bag modules during inflation. The side air bag and curtain side-impact air bag will deflate quickly after the collision is over.

The supplemental side air bags and curtain side-impact air bags operate only when the ignition switch is in the ON or START position.

After turning the ignition key to the ON position, the supplemental air bag warning light illuminates. The air bag warning light will turn off after about 7 seconds if the systems are operational.

WARNING

- **Do not place any objects near the seatback of the front seats. Also, do not place any objects (an umbrella, bag, etc.) between the front door finisher and the front seat. Such objects may become dangerous projectiles and cause injury if the side air bag inflates.**
- **Right after inflation, several side air bag and curtain side-impact air bag system components will be hot. Do not touch them; you may severely burn yourself.**
- **No unauthorized changes should be made to any components or wiring of the side air bag and curtain side-impact air bag system. This is to prevent accidental inflation of the side air bag and curtain side-impact air bag or damage to the side air bag and curtain side-impact air bag system.**
- **Do not make unauthorized changes**

to your vehicle's electrical system, suspension system or side panel. This could affect proper operation of the supplemental side air bag and curtain side-impact air bag system.

- **Tampering with the supplemental side air bag system may result in serious personal injury. For example, do not change the front seats by placing material near the seatback or by installing additional trim material, such as seat covers, around the side air bag.**
- **Work around and on the side air bag and curtain side-impact air bag system should be done by a NISSAN dealer. Installation of electrical equipment should also be done by a NISSAN dealer. The SRS wiring harnesses* should not be modified or disconnected. Unauthorized electrical test equipment and probing devices should not be used on the side air bag system.**

*** The SRS wiring harness connectors are yellow and orange for easy identification.**

When selling your vehicle, we request that you inform the buyer about the side air bag and curtain side-impact air bag system and guide the buyer to the appropriate sections in this Owner's Manual.

Pre-tensioner seat belt system

WARNING

- **The pre-tensioner seat belt cannot be reused after activation. It must be replaced together with the retractor and buckle as a unit.**
- **If the vehicle becomes involved in a frontal collision but the pre-tensioner is not activated, be sure to have the pre-tensioner system checked and, if necessary, replaced by a NISSAN dealer.**
- **No unauthorized changes should be made to any components or wiring of the pre-tensioner seat belt system. This is to prevent accidental activation of the pre-tensioner seat belt or damage to the pre-tensioner seat belt operation. Tampering with the pre-tensioner seat belt system may result in serious personal injury.**
- **Work around and on the pre-tensioner system should be done by a NISSAN dealer. Installation of electrical equipment should also be done by a NISSAN dealer. Unauthorized electrical test equipment and probing devices should not be used on the pre-tensioner seat belt system.**
- **If you need to dispose of the pre-tensioner or scrap the vehicle, contact a NISSAN dealer. Correct pre-tensioner disposal procedures are set forth in the appropriate NISSAN Service Manual. Incorrect disposal procedures could cause personal injury.**

The front seat pre-tensioner seat belt system activates in conjunction with the front supplemental air bag systems. Working with the seat

belt retractor, it helps tighten the seat belt when the vehicle becomes involved in certain types of collisions, helping to restrain front seat occupants.

The pre-tensioner is encased with the seat belt's retractor. These seat belts are used the same as conventional seat belts.

When the pre-tensioner seat belt activates, smoke is released and a loud noise may be heard. The smoke is not harmful and does not indicate a fire. Care should be taken not to inhale it as it may cause irritation and choking. Those with a history of a breathing condition should get fresh air promptly.

If any abnormality occurs in the pre-tensioner seat belt system, the supplemental air bag warning light will not come on, will flash intermittently or will turn on for 7 seconds and remain on after the ignition key has been turned to the ON or START position. In this case, the pre-tensioner seat belt may not function properly. They must be checked and repaired. Take your vehicle to a NISSAN dealer.

When selling your vehicle, we request that you inform the buyer about the pre-tensioner seat belt system and guide the buyer to the appropriate sections in this Owner's Manual.

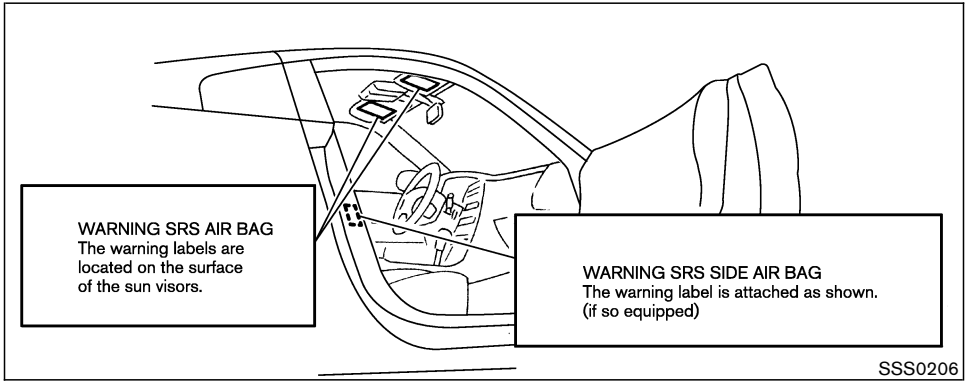

SUPPLEMENTAL AIR BAG WARNING LABELS

Warning labels about the supplemental air bag system are placed in the vehicle as shown in the illustration.

SUPPLEMENTAL AIR BAG WARNING LIGHT

The supplemental air bag warning light, displaying in the instrument panel, monitors the circuits of the supplemental front air bag, supplemental side air bag (if so equipped) and curtain side-impact air bag (if so equipped for Coupe models) systems, and pre-tensioner seat belt. The circuits monitored by the air bag warning light are the diagnosis sensor unit, crash zone sensor, satellite sensors, front air bag modules, side air bag modules, curtain side-impact air bag modules, pre-tensioner seat belt and all related wiring.

After turning the ignition key to the ON position, the supplemental air bag warning light illuminates. The supplemental air bag warning light will turn off after about 7 seconds if the system is operational.

If any of the following conditions occur, the supplemental front air bag, supplemental side air bag and curtain side-impact air bag systems, and pre-tensioner seat belt need servicing:

- The supplemental air bag warning light remains on after approximately 7 seconds.
- The supplemental air bag warning light flashes intermittently.
- The supplemental air bag warning light does not come on at all.

Under these conditions, the supplemental front air bags, supplemental side air bags, curtain side-impact air bags and/or pre-tensioner seat belt may not operate properly. They must be checked and repaired. Take your vehicle to a NISSAN dealer.

WARNING

If the supplemental air bag warning light is on, it could mean that the supplemental front air bag, supplemental side air bag, curtain side-impact air bag systems and/or pre-tensioner seat belt systems will not operate in an accident. To help avoid injury to yourself or others, have your vehicle checked by a NISSAN dealer as soon as possible.

Repair and replacement procedure

The supplemental front air bags, supplemental side air bags (if so equipped), curtain side-impact air bags (if so equipped for Coupe models) and pre-tensioner seat belt are designed to inflate on a one-time-only basis. As a reminder, unless it is damaged, the supplemental air bag warning light will remain illuminated after inflation has occurred. Repair and replacement of these systems should be done only by a NISSAN dealer.

When maintenance work is required on the vehicle, the supplemental front air bags, side air bags, curtain side-impact air bags, related parts and pre-tensioner seat belt should be pointed out to the person conducting the maintenance. The ignition key should always be in the LOCK position when working under the hood or inside the vehicle.

WARNING

- **Once a supplemental front air bag, supplemental side air bag or curtain side-impact air bag has inflated, the air bag module will not function again and must be replaced. Additionally, if any of the supplemental front air bags inflate, the activated pre-tensioner seat belts must also be replaced. The air bag module and pre-tensioner seat belt system should be replaced by a NISSAN dealer. The air bag module and pre-tensioner seat belt system cannot be repaired.**
- **The supplemental front air bag and side air bag, curtain side-impact air bag systems and pre-tensioner seat belt system should be inspected by a NISSAN dealer if there is any damage to the front end or side portion of the vehicle.**
- **If you need to dispose of these supplemental systems or scrap the vehicle, contact a NISSAN dealer.**

Correct disposal procedures are set forth in the appropriate NISSAN Service Manual. Incorrect disposal procedures could cause personal injury.

MEMO

2 Instruments and controls

Instrument panel 2-2
Meters and gauges 2-3
Speedometer and odometer 2-4
Tachometer 2-5
Engine coolant temperature gauge 2-5
Fuel gauge 2-6
Engine oil pressure gauge 2-7
Volt meter 2-8
Trip computer 2-8
Warning/indicator lights and audible reminders 2-11
Checking bulbs 2-11
Warning lights 2-11
Indicator lights 2-15
Audible reminders 2-17
Security systems 2-18
Vehicle security system 2-18
NISSAN Vehicle Immobilizer System 2-19
Windshield wiper and washer switch 2-21
Rear window wiper and washer switch (Coupe models) 2-22
Rear window and outside mirror defroster switch 2-23
Headlight and turn signal switch 2-24
Xenon headlights 2-24
Headlight switch 2-24
Daytime running light system (Canada only) 2-25
Turn signal switch 2-26
Instrument brightness control 2-26
Hazard warning flasher switch 2-27
Horn 2-27
Heated seats (if so equipped) 2-28
Vehicle Dynamic Control (VDC) off switch (if so equipped) 2-29
Traction Control System (TCS) off switch (if so equipped) 2-29
Clock 2-30
Adjusting the time 2-30
Power outlet 2-31
Storage 2-32
Instrument pocket (except for navigation system equipped models) 2-32
Sunglasses holder (Coupe models) 2-32
Cargo net 2-33
Cup holders 2-33
Console box 2-35
Rear floor box 2-35
Rear parcel box 2-37
Stowing golf bags 2-37
Coat hook (Coupe models) 2-38

Windows 2-39
Power windows 2-39
Automatic adjusting function 2-40
Interior lights 2-41
Room light 2-41
Map lights 2-41
Vanity mirror light 2-42
Luggage compartment light (Coupe models) 2-42
Trunk light (Roadster models)..... 2-42
HomeLink® Universal Transceiver (if so equipped).... 2-43
Programming HomeLink® 2-43
Programming HomeLink® for Canadian customers 2-45
Operating the HomeLink® Universal Transceiver 2-45
Programming trouble-diagnosis 2-45
Clearing the programmed information 2-45
Reprogramming a single HomeLink® button 2-45
If your vehicle is stolen 2-46

INSTRUMENT PANEL

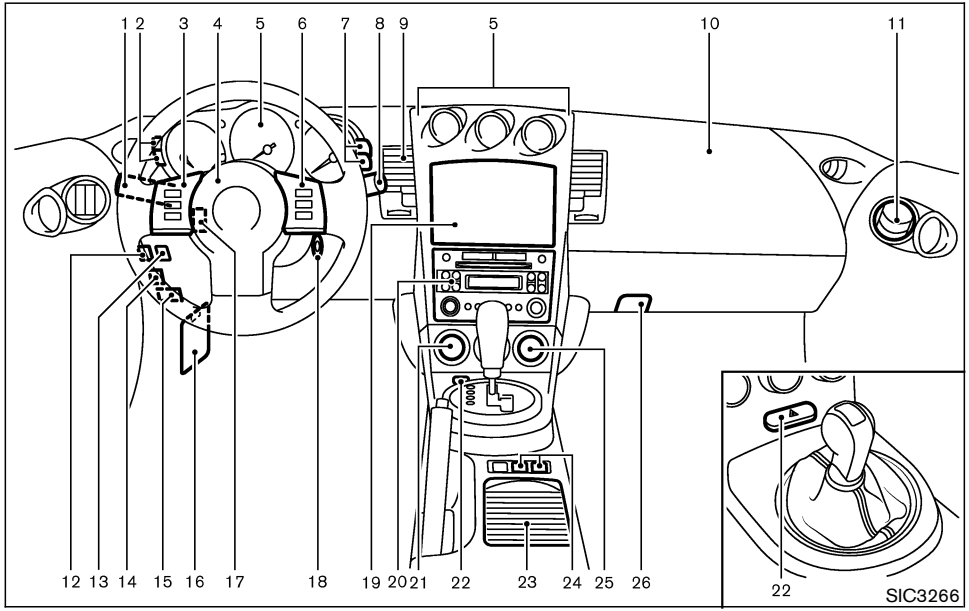

1. Headlight/turn signal switch
2. Instrument brightness control switch
3. Steering wheel switch for audio control (if so equipped) or switch for Bluetooth® Hands-Free Phone System (if so equipped)
4. Driver supplemental air bag/Horn
5. Meters/gauges
6. Cruise control main/set switch (if so equipped)
7. Trip computer mode/setting switch
8. Wiper/washer switch
9. Center ventilator
10. Passenger supplemental air bag
11. Side ventilator
12. Soft top operating switch (for Roadster models)
13. VDC (Vehicle dynamic control) OFF switch (if so equipped) or TCS (Traction control system) OFF switch (if so equipped)
14. Fuel-filler door opener switch
15. Hood lock release handle
16. Fuse box
17. Tilting steering wheel lock lever
18. Ignition switch/steering lock
19. Navigation system display* or Instrument pocket
20. Audio system/Clock
21. Rear window and outside mirror defroster switch
22. Hazard warning flasher switch
23. Cup holder
24. Heated seat switch (if so equipped)
25. Heater/air conditioner control
26. Power outlet

*: Refer to the separate Navigation System Owner's Manual.

METERS AND GAUGES

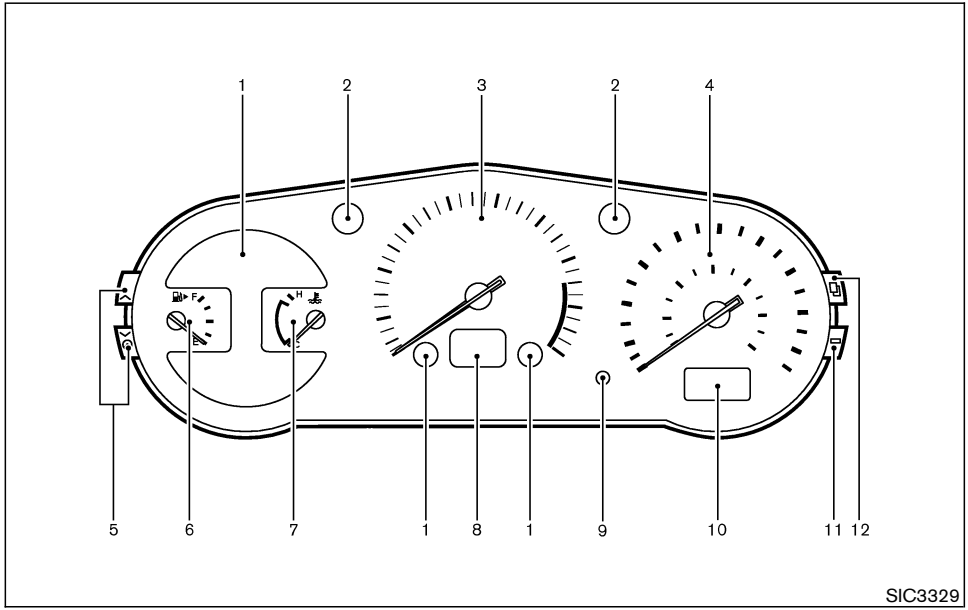

Combination meter:

1. Warning/Indicator lights
2. Turn signal/hazard indicator lights
3. Tachometer
4. Speedometer
5. Instrument brightness control switch
   (See “Headlight and turn signal switch” later in this section.)
6. Fuel gauge
7. Engine coolant temperature gauge
8. Automatic transmission position indicator or Manual transmission shift up indicator
   (See “Driving the vehicle” in the “5. Starting and driving” section.)
9. Reset knob for trip odometer
10. Odometer (Total/Twin trip)
11. Trip computer setting switch
    (See “Trip computer” later in this section.)
12. Trip computer mode switch
    (See “Trip computer” later in this section.)

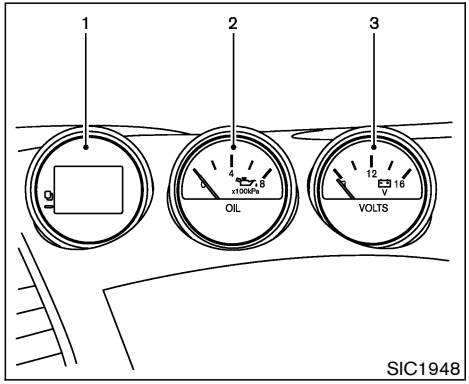

Triple meter:

1. Trip computer
2. Engine oil pressure gauge
3. Volt meter

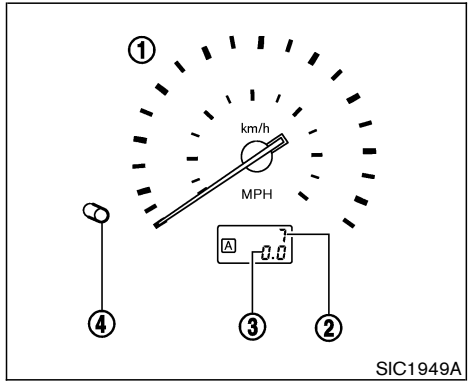

① Speedometer
② Odometer
③ Twin trip odometer
④ Reset knob for trip odometer

SPEEDOMETER AND ODOMETER

Speedometer

The speedometer indicates vehicle speed in miles per hour (MPH) and kilometers per hour (km/h).

Odometer/Twin trip odometer

The odometer/twin trip odometer are displayed when the ignition switch is in the ON position.

The odometer records the total distance the vehicle has been driven.

The twin trip odometer records the distance of individual trips.

Changing the display:

Pushing the reset knob changes the display as follows:

TRIP A → TRIP B → TRIP A

Resetting the trip odometer:

Pushing the reset knob for more than 1 second resets the trip odometer to zero.

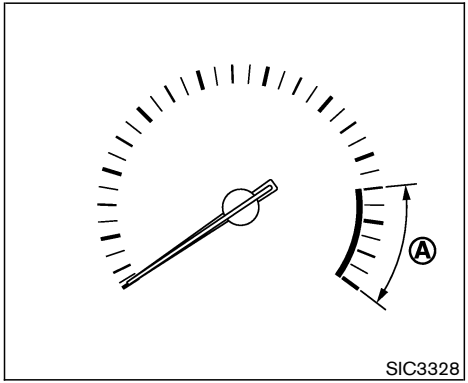

TACHOMETER

The tachometer indicates engine speed in revolutions per minute (rpm). Do not rev engine into the red zone (A).

CAUTION

When engine speed approaches the red zone, shift to a higher gear. Operating the engine in the red zone may cause serious engine damage.

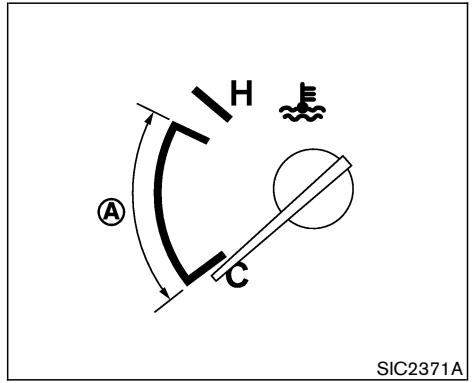

ENGINE COOLANT TEMPERATURE GAUGE

The gauge indicates the engine coolant temperature.

The engine coolant temperature is within the normal range (A) when the gauge needle points within the zone shown in the illustration.

The engine coolant temperature will vary with the outside air temperature and driving conditions.

CAUTION

If the gauge indicates a coolant temperature near the hot (H) end of the normal range, reduce vehicle speed to decrease the temperature. If the gauge is over the normal range, stop the vehicle as soon as safely possible. If the engine is overheated, continued operation of the vehicle may seriously damage the engine. See "If your vehicle overheats" in the "6. In case of emergency" section for immediate action required.

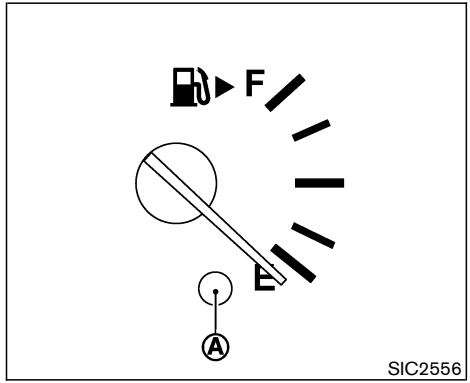

FUEL GAUGE

The gauge indicates the approximate fuel level in the tank.

The gauge may move slightly during braking, turning, acceleration, or going up or down hill.

The gauge needle is designed to move to the E (Empty) position when the ignition key is turned to the OFF position.

Refill the fuel tank before the gauge registers the E (Empty) position.

The low fuel warning light comes on when the fuel tank is getting low. Refuel as soon as it is convenient, preferably before the gauge reaches the E position. There will be a small reserve of fuel in the tank when the fuel gauge needle reaches the E position.

The ⛽▶ indicates that the fuel-filler door is located on the passenger's side of the vehicle.

CAUTION

- **If the vehicle runs out of fuel, the SERVICE ENGINE SOON malfunction indicator light (MIL) may come on. Refuel as soon as possible. After a few driving trips, the SERVICE ENGINE SOON light should turn off. If the light remains on after a few driving trips, have the vehicle inspected by a NISSAN dealer.**
- **For additional information, see "Malfunction indicator light (MIL)" later in this section.**

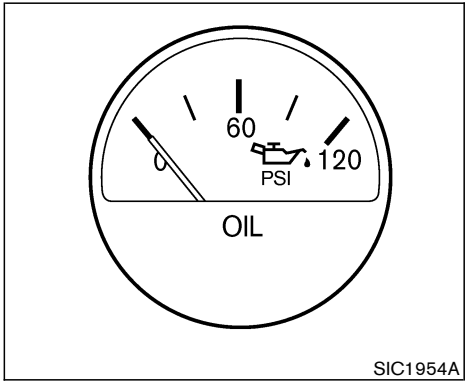

Type A

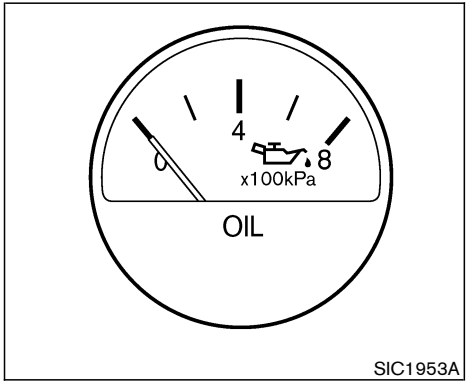

Type B

ENGINE OIL PRESSURE GAUGE

The gauge indicates the engine lubrication system oil pressure while the engine is running. When the engine speed is high, the engine oil pressure is also high. When it is low, the gauge indicates the low oil pressure.

CAUTION

- **This gauge is not designed to indicate low engine oil level. Use the dipstick to check the oil level. (See "Engine oil" in the "8. Maintenance and do-it-yourself" section.)**
- **If the gauge needle does not move with the proper amount of engine oil, have the vehicle checked by a NISSAN dealer. Continued vehicle operation in such a condition could cause serious damage to the engine.**

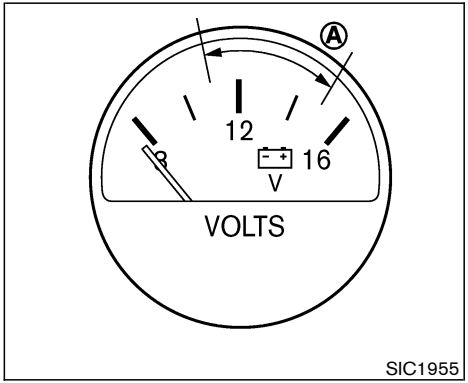

VOLT METER

When the ignition switch is turned to the ON position, the volt meter indicates the battery voltage; while the engine is running, it indicates the alternator voltage of 11 - 15 volts (normal range Ⓐ). However, while cranking the engine, the volts drop below the normal range.

If the needle is not in the normal range Ⓐ while the engine is running, it may indicate that the charging system is not functioning properly. Have the system checked by a NISSAN dealer.

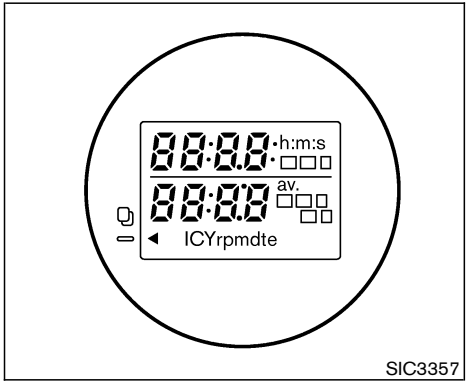

TRIP COMPUTER

The display of the trip computer is situated in the triple meter. When the ignition switch is turned to ON, the display scrolls all the modes of the trip computer and then shows the mode chosen before the ignition switch is turned OFF.

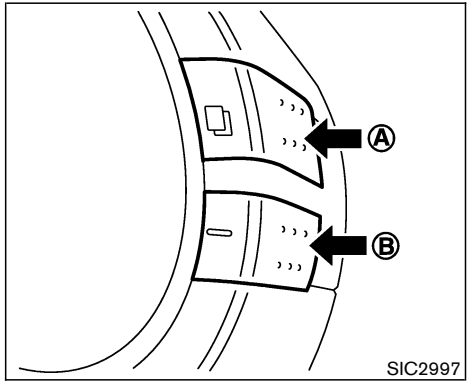

Switches for the trip computer are located on the side of the combination meter panel. To operate the trip computer, push the side of the switches as shown above.

Ⓐ: Trip computer mode switch
Ⓑ: Trip computer setting switch

When the ignition switch is turned to ON, modes of the trip computer can be selected by pushing the trip computer mode switch Ⓐ.

Each time the mode switch Ⓐ is pushed, the display will change as follows:

Speed indicator → Outside air temperature (ICY) → Distance to empty (dte) → Average fuel

consumption and speed → Elapsed time and trip odometer → Stopwatch → Up-shift indicator setting (for M/T models) → Speed indicator

Speed indicator (mph or km/h)

The vehicle speed is displayed in MPH or km/h while driving.

The speed indicator in the trip computer indicates the reference speed. The actual speed indicated by the speedometer (combination meter) may differ from the one in the trip computer.

Outside air temperature (ICY — °F or °C)

The outside air temperature is displayed in °F or °C in the range of −22 to 131°F (−30 to 55°C).

The outside air temperature mode includes a low temperature warning feature: below 37°F (3°C), the outside air temperature mode is automatically selected and the ICY indicator will illuminate in order to draw the driver's attention. Push the mode switch Ⓐ if you wish to return to the mode that was selected before the warning occurred. The ICY indicator will continue blinking as long as the temperature remains below 39°F (4°C).

The ambient temperature sensor is located in front of the radiator. The sensor may be affected by road or engine heat, wind directions and other driving conditions. The display may differ from the actual ambient temperature or the temperature displayed on various signs or billboards.

Distance to empty (dte — mls or km)

The distance to empty (dte) mode provides you with an estimation of the distance that can be driven before refueling. The dte is constantly being calculated, based on the amount of fuel in the fuel tank and the actual fuel consumption.

The display is updated every 30 seconds.

The dte mode includes a low range warning feature: when the fuel level is low, the dte mode is automatically selected and the digits blink in order to draw the driver's attention. Press the mode switch Ⓐ if you wish to return to the mode that was selected before the warning occurred. The dte indicator will remain blinking until the vehicle is refueled.

When the fuel level drops even lower, the dte display will change to (----).

NOTE:

- **If the amount of fuel added while the ignition switch is OFF is small, the display just before the ignition switch is turned OFF may continue to be displayed.**
- **When driving uphill or rounding curves, the fuel in the tank shifts, which may momentarily change the display.**

Average fuel consumption (mpg or l (liter)/100 km) and speed (av. mph or av. km/h)

Fuel consumption:

The average fuel consumption mode shows the average fuel consumption since the last reset. Resetting is done by pushing the trip computer setting switch Ⓑ for more than approximately 1 second. (The average speed is also reset at the same time.)

The display is updated every 30 seconds. At about the first 1/3 miles (500 m) after a reset, the display shows (----).

Speed:

The average speed mode shows the average vehicle speed since the last reset. Resetting is done by pushing the setting switch Ⓑ for more than approximately 1 second. (The average fuel consumption is also reset at the same time.)

The display is updated every 30 seconds. The

first 30 seconds after a reset, the display shows (----).

Elapsed time (h:m:s) and trip odometer (mls or km)

Elapsed time:

The elapsed time mode shows the time since the last reset. The displayed time can be reset by pushing the trip computer setting switch (B) for more than approximately 1 second. (The trip odometer is also reset at the same time.)

Trip odometer:

The trip odometer mode shows the total distance the vehicle has been driven since the last reset. Resetting is done by pushing the setting switch (B) for more than approximately 1 second. (The elapsed time is also reset at the same time.)

Stopwatch (h:m:s)

You can use the trip computer as a stopwatch. Each time the trip computer setting switch (B) is pushed, the stopwatch will be operated as follows:

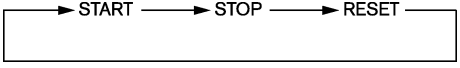

After 100 hours, the time will start from the reset display again.

Even if the display is switched to the other mode while the time is starting, the stopwatch continues to advance until you stop the time in the stopwatch mode. When the ignition switch is turned to the OFF position, the time is reset.

Up-shift indicator setting (rpm) (for manual transmission models)

The up-shift indicator setting mode is used to set the desired engine speed (rpm) for the up-shift indicator (situated in the tachometer) to illuminate. When the engine speed approaches or reaches the set figure, the up-shift indicator will flash or illuminate to show the driver the timing for shifting into a higher gear. See “Driving the vehicle” in the “5. Starting and driving” section for the use of the up-shift indicator.

When the up-shift indicator setting mode is selected, the rpm indicator blinks and the engine speed currently set is displayed. (The initial factory setting is 7,500 rpm.) The figure can be changed between 2,000 and 9,000 rpm by pushing trip computer setting switch (B). Pressing the switch for less than approximately 1 second will add the figure by 100 rpm. If pushing for more than approximately 1 second, the figure will increase by 500 rpm.

If the battery cable is disconnected, the set engine speed will be returned to the initial figure (7,500 rpm).

Display priority

If a low outside air temperature warning, low dte (distance to empty) range warning and low tire pressure warning occur simultaneously, other display modes switch automatically to the outside air temperature display.

When trip computer mode switch (A) is pressed, the display switches to the mode chosen before the warning display, but the ICY indicator will continue blinking.

WARNING/INDICATOR LIGHTS AND AUDIBLE REMINDERS

ABS or (ABS)	Anti-lock Braking System (ABS) warning light		Low washer fluid warning light		High beam indicator light (Blue)
A T CHECK	Automatic transmission check warning light (A/T models)		Seat belt warning light	SERVICE ENGINE SOON	Malfunction Indicator Light (MIL)
BRAKE or	Brake warning light		Supplemental air bag warning light	SLIP	Slip indicator light
	Charge warning light	M P	Automatic transmission position indicator light (A/T models)	TCS OFF	Traction Control System (TCS) off indicator light (if so equipped)
	Door open warning light	CRUISE	Cruise main switch indicator light (if so equipped)	VDC OFF	Vehicle Dynamic Control (VDC) off indicator light (if so equipped)
	Engine oil pressure warning light	SET	Cruise set switch indicator light (if so equipped)		Soft top indicator light (Roadster models)
	Low tire pressure warning light	PASS AIR BAG OFF	Front passenger air bag status light		Turn signal/hazard indicator lights

CHECKING BULBS

Apply the parking brake and turn the ignition key to ON without starting the engine. The following lights will come on:

, BRAKE or , , SERVICE ENGINE SOON

The following lights come on briefly and then go off:

, ABS or , , SLIP , TCS OFF , VDC OFF , A T CHECK

If any light fails to come on, it may indicate a burned-out bulb or an open circuit in the electrical system. Have the system repaired promptly.

WARNING LIGHTS

ABS or (ABS) Anti-lock Braking System (ABS) warning light

When the ignition switch is in the ON position, the Anti-lock Braking System (ABS) warning light illuminates and then turns off. This indicates the ABS is operational.

If the ABS warning light illuminates while the engine is running, or while driving, it may indicate the ABS is not functioning properly. Have the system checked by a NISSAN dealer.

If an ABS malfunction occurs, the anti-lock function is turned off. The brake system then operates normally, but without anti-lock assistance. See “Brake system” in the “5. Starting and driving” section.

AT CHECK Automatic transmission check warning light (A/T models)

When the ignition switch is turned to the ON position, the automatic transmission check warning light comes on and then turns off. This indicates that the automatic transmission system is operational.

If the light comes on while the engine is running or while driving, it may indicate that the automatic transmission system is not functioning properly. Have a NISSAN dealer check and repair the transmission.

BRAKE or Brake warning light

This light functions for both the parking brake and the foot brake systems.

Parking brake indicator:

When the ignition switch is in the ON position, the light comes on when the parking brake is applied.

Low brake fluid warning light:

The light warns of a low brake fluid level. If the light comes on while the engine is running with the parking brake not applied, stop the vehicle and perform the following:

1. Check the brake fluid level. Add brake fluid as necessary. See “Brake and clutch fluid” in the “8. Maintenance and do-it-yourself” section.

WARNING

- **Your brake system may not be working properly if the warning light is on. Driving could be dangerous. If you judge it to be safe, drive carefully to the nearest service station for repairs. Otherwise, have your vehicle towed because driving it could be dangerous.**
- **Pressing the brake pedal with the engine stopped and/or a low brake fluid level may increase your stopping distance and braking will require greater pedal effort as well as pedal travel.**
- **If the brake fluid level is below the MINIMUM or MIN mark on the brake fluid reservoir, do not drive until the brake system has been checked at a NISSAN dealer.**

2. If the brake fluid level is correct, have the warning system checked by a NISSAN dealer.

Anti-lock Braking System (ABS) warning indicator:

When the parking brake is released and the brake fluid level is sufficient, if both the brake warning light and the ABS warning light illuminate, it may indicate the ABS is not functioning properly. Have the brake system checked by a NISSAN dealer. See “Anti-lock Braking System (ABS) warning light” earlier in this section.

Charge warning light

If the light comes on while the engine is running, it may indicate that the charging system is not functioning properly. Turn the engine off and check the alternator belt. If the belt is loose, broken, missing or if the light remains on, see a NISSAN dealer immediately.

CAUTION

Do not continue driving if the belt is loose, broken or missing.

Door open warning light

This light comes on when any of the doors and/or rear hatch are not closed securely while the ignition switch is in the ON position.

Engine oil pressure warning light

This light warns of low engine oil pressure. If the light flickers or comes on during normal driving, pull off the road in a safe area, stop the engine **immediately** and call a NISSAN dealer or other authorized repair shop.

The engine oil pressure warning light is not designed to indicate a low oil level. Use the dipstick to check the oil level. See "Engine oil" in the "8. Maintenance and do-it-yourself" section.

CAUTION

Running the engine with the engine oil pressure warning light on could cause serious damage to the engine almost immediately. Turn off the engine as soon as it is safe to do so.

Low tire pressure warning light

Your vehicle is equipped with a tire pressure monitoring system (TPMS) that monitors the tire pressure of all tires except the spare.

The low tire pressure warning light warns of low tire pressure or indicates that the TPMS is not functioning properly.

After the ignition switch is turned ON, this light illuminates for about 1 second and turns off.

Low tire pressure warning:

If the vehicle is being driven with low tire pressure, the warning light will illuminate.

When the low tire pressure warning light illuminates, you should stop and adjust the tire pressure to the recommended COLD tire pressure shown on the Tire and Loading Information label. The low tire pressure warning light does not automatically turn off when the tire pressure is adjusted. After the tire is inflated to the recommended pressure, the vehicle must be driven at speeds above 16 MPH (25 km/h) to activate the TPMS and turn off the low tire pressure warning light. Use a tire pressure gauge to check the tire pressure.

For additional information, see "Tire pressure monitoring system (TPMS)" in the "5. Starting and driving" section and in the "6. In case of emergency" section.

TPMS malfunction:

If the TPMS is not functioning properly, the low tire pressure warning light will flash for approximately 1 minute when the ignition switch is turned ON. The light will remain on after the 1 minute. Have the system checked by a NISSAN dealer.

For additional information, see "Tire pressure monitoring system (TPMS)" in the "5. Starting and driving" section.

WARNING

- **If the light does not illuminate with the ignition switch turned ON, have the vehicle checked by a NISSAN dealer as soon as possible.**
- **If the light illuminates while driving, avoid sudden steering maneuvers or abrupt braking, reduce vehicle speed, pull off the road to a safe location and stop the vehicle as soon as possible. Serious vehicle damage could occur and may lead to an accident and could result in serious personal injury. Check the tire pressure for all four tires. Adjust the tire pressure to the recommended COLD tire pressure shown on the Tire and Loading Information label to turn the low tire**

pressure warning light OFF. If the light still comes on while driving after adjusting the tire pressure, a tire may be flat. If you have a flat tire, replace it with a spare tire as soon as possible.

- **When a spare tire is mounted or a wheel is replaced, the TPMS will not function and the low tire pressure warning light will flash for approximately 1 minute. The light will remain on after the 1 minute. Contact your NISSAN dealer as soon as possible for tire replacement and/or system resetting.**
- **Replacing tires with those not originally specified by NISSAN could affect the proper operation of the TPMS.**

CAUTION

- **The TPMS is not a substitute for the regular tire pressure check. Be sure to check the tire pressure regularly.**
- **If the vehicle is being driven at speeds of less than 16 MPH (25 km/h), the TPMS may not operate correctly.**
- **Be sure to install the specified size of tires to the front and rear.**

Low washer fluid warning light

This light comes on when the washer fluid is at a low level. Add washer fluid as necessary. See “Window washer fluid” in the “8. Maintenance and do-it-yourself” section.

Seat belt warning light

The seat belt warning light and chime remind you to fasten seat belts. The light illuminates whenever the ignition key is turned to ON, and will remain illuminated until the driver’s seat belt is fastened.

The seat belt warning light may also illuminate if the front passenger’s seat belt is not fastened when the front passenger’s seat is occupied. For 5 seconds after the ignition switch is in the ON position, the system does not activate the warning light for the front passenger.

See “Seat belts” in the “1. Safety — Seats, seat belts and supplemental restraint system” section for precautions on seat belt usage.

Supplemental air bag warning light

After turning the ignition key to the ON position, the supplemental air bag warning light will illuminate. The supplemental air bag warning light will turn off after about 7 seconds if the system is operational.

If any of the following conditions occur, the supplemental front air bag, supplemental side air bag (if so equipped) and curtain side-impact air bag (if so equipped), and pre-tensioner seat belt systems need servicing and your vehicle must be taken to a NISSAN dealer.

- The supplemental air bag warning light remains on after approximately 7 seconds.
- The supplemental air bag warning light flashes intermittently.
- The supplemental air bag warning light does not come on at all.

Unless checked and repaired, the supplemental restraint system (air bag system) and/or the pre-tensioner seat belt may not function properly. For additional information, see “Supplemental restraint system” in the “1. Safety — Seats,

seat belts and supplemental restraint system” section.

WARNING

If the supplemental air bag warning light is on, it could mean that the supplemental front air bag, supplemental side air bag, curtain side-impact air bag systems and/or pre-tensioner seat belt systems will not operate in an accident. To help avoid injury to yourself or others, have your vehicle checked by a NISSAN dealer as soon as possible.

INDICATOR LIGHTS

Automatic transmission position indicator light (A/T models)

When the ignition key is turned to the ON position, the indicator in the tachometer shows the automatic transmission selector lever position. See “Driving the vehicle” (automatic transmission) in the “5. Starting and driving” section.

Cruise main switch indicator light (if so equipped)

The light comes on when the cruise control main switch is pushed. The light goes out when the main switch is pushed again. When the cruise main switch indicator light comes on, the cruise control system is operational.

Cruise set switch indicator light (if so equipped)

The light comes on while the vehicle speed is controlled by the cruise control system. If the light blinks while the engine is running, it may indicate the cruise control system is not functioning properly. Have the system checked by a NISSAN dealer.

Front passenger air bag status light

The front passenger air bag status light ( ) will be lit and the passenger front air bag will be OFF depending on how the front passenger seat is being used.

For front passenger air bag status light operation, see “NISSAN advanced air bag system” in the “1. Safety — Seats, seat belts and supplemental restraint system” section of this manual.

High beam indicator light (Blue)

This light comes on when the headlight high beam is on and goes out when the low beam is selected.

Malfunction Indicator Light (MIL)

If the Malfunction Indicator Light (MIL) comes on steady or blinks while the engine is running, it may indicate a potential emission control malfunction.

The malfunction indicator light may also come on steady if the fuel-filler cap is loose or missing, or if the vehicle runs out of fuel. Check to make sure the fuel-filler cap is installed and closed tightly, and that the vehicle has at least 3 US gallons (14 liters) of fuel in the fuel tank.

After a few driving trips, the light should turn off if no other potential emission control system malfunction exists.

If this indicator light comes on steady for 20 seconds and then blinks for 10 seconds when the engine is not running, it indicates that the vehicle is not ready for an emission control system inspection/maintenance test. See “Readiness for inspection/maintenance (I/M) test” in the “9. Technical and consumer informa-

tion" section of this manual.

Operation

The malfunction indicator light will come on in one of two ways:

- Malfunction indicator light on steady — An emission control system malfunction has been detected. Check the fuel-filler cap. If the fuel-filler cap is loose or missing, tighten or install the cap and continue to drive the vehicle. The SERVICE ENGINE SOON light should turn off after a few driving trips. If the SERVICE ENGINE SOON light does not turn off after a few driving trips, have the vehicle inspected by a NISSAN dealer. You do not need to have your vehicle towed to the dealer.
- Malfunction indicator light blinking — An engine misfire has been detected which may damage the emission control system. To reduce or avoid emission control system damage:

  a) Do not drive at speeds above 45 MPH (72 km/h).
  b) Avoid hard acceleration or deceleration.
  c) Avoid steep uphill grades.
  d) If possible, reduce the amount of cargo being hauled or towed.

  The malfunction indicator light may stop blinking and come on steady.

  Have the vehicle inspected by a NISSAN dealer. You do not need to have your vehicle towed to the dealer.

CAUTION

Continued vehicle operation without having the emission control system checked and repaired as necessary could lead to poor driveability, reduced fuel economy, and possible damage to the emission control system.

SLIP Slip indicator light

The light will blink when the Vehicle Dynamic Control (VDC) system or the Traction Control System (TCS) is operating, thus alerting the driver to the fact that the road surface is slippery and the vehicle is nearing its traction limits.

This light also comes on when the ignition switch is turned to the ON position. The light will turn off if the VDC or TCS is operational.

TCS OFF Traction Control System (TCS) off indicator light (if so equipped)

The light comes on when the Traction Control System (TCS) off switch is pushed to OFF. This indicates the TCS is not operating.

This light also comes on when the ignition switch is turned to the ON position. The light will turn off if the TCS is operational.

When the TCS off indicator light and slip indicator light come on with the TCS turned on, this light alerts the driver to the fact that the system's fail-safe mode is operating, that is the TCS may not be functioning properly. Have the system checked by a NISSAN dealer. If a malfunction occurs in the system, the traction control function will be canceled but the vehicle is still driveable. For additional information, see "Traction Control System (TCS)" in the "5. Starting and driving" section of this manual.

VDC OFF Vehicle Dynamic Control (VDC) off indicator light (if so equipped)

The light comes on when the Vehicle Dynamic Control (VDC) off switch is pushed to OFF. This indicates the VDC system and Traction Control System (TCS) are not operating.

This light also comes on when the ignition switch is turned to the ON position. The light will turn off if the VDC system is operational.

When the VDC off indicator light and slip indi-

cator light come on with the VDC system turned on, this light alerts the driver to the fact that the system's fail-safe mode is operating, that is the VDC system may not be functioning properly. Have the system checked by a NISSAN dealer. If a malfunction occurs in the system, the VDC system function will be canceled but the vehicle is still driveable. For additional information, see "Vehicle Dynamic Control (VDC) system" in the "5. Starting and driving" section of this manual.

Soft top indicator light (Roadster models)

This light illuminates when the soft top is being operated or it is stopped before reaching a full open/close state. When the top is fully opened, the light will turn off. When the top is fully closed, the light will flash.

The soft top can be moved with the soft top operating switch only under all of the following conditions:

- When the vehicle is stopped.
- When the foot brake pedal is depressed.
- When the ignition switch is ON.

CAUTION

Operate the soft top with the engine running to prevent a discharged battery.

When the soft top is in motion, and any of the above conditions are discontinued or the passenger power seat switches (on the cushion or the seatback) are operated, the top will stop moving. Remove your hand from the operating switch, and push it again under the above conditions until the top is fully opened or closed. The soft top indicator light will turn off when the top open operation is completely finished. When closing the top, the light, which is illuminated, will begin to flash when the top close operation is completely finished. Securely engage the top to the vehicle by operating the top latch lever. The light will turn off.

If the soft top indicator light flashes with the ignition switch ON (whether the top is operated or not, and when the top is engaged), it may indicate the electric soft top control unit is not functioning properly. Have your vehicle checked by a NISSAN dealer as soon as possible.

For more details about the electric soft top operation, see "Soft top" in the "3. Pre-driving checks and adjustments" section.

Turn signal/hazard indicator lights

The light flashes when the turn signal switch lever or hazard switch is turned on.

AUDIBLE REMINDERS

Key reminder chime

The chime will sound if the driver's side door is opened while the key is left in the ignition switch (ignition switch is turned off). Remove the key and take it with you when leaving the vehicle.

Light reminder chime

The chime will sound when the driver's door is opened with the headlight switch on unless the key is in the ignition switch. Make sure to turn the light switch off when you leave the vehicle.

Seat belt warning chime

The chime will sound for about 6 seconds unless the driver's seat belt is securely fastened.

Brake pad wear warning

The disc brake pads have audible wear warnings. When a brake pad requires replacement, it will make a high pitched scraping sound when the vehicle is in motion whether or not the brake pedal is depressed. Have the brakes checked as

soon as possible if the warning sound is heard.

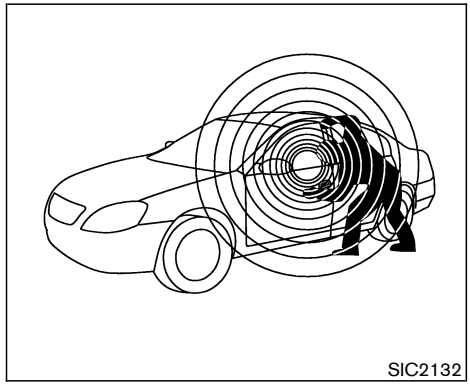

Your vehicle has two types of security systems, as follows:

- Vehicle Security System
- NISSAN Vehicle Immobilizer System

The security condition will be shown by the security indicator light.

VEHICLE SECURITY SYSTEM

The vehicle security system provides visual and audible alarm signals if someone opens the doors or rear hatch/trunk lid when the system is armed. It is not, however, a motion detection type system that activates when a vehicle is moved or when a vibration occurs.

The system helps deter vehicle theft but cannot prevent it, nor can it prevent the theft of interior or exterior vehicle components in all situations. Always secure your vehicle even if parking for a brief period. Never leave your keys in the vehicle, and always lock the vehicle when unattended. Be aware of your surroundings, and park in secure, well-lit areas whenever possible.

Many devices offering additional protection, such as component locks, identification markers, and tracking systems, are available at auto supply stores and specialty shops. A NISSAN dealer may also offer such equipment. Check with your insurance company to see if you may be eligible for discounts for various theft protection features.

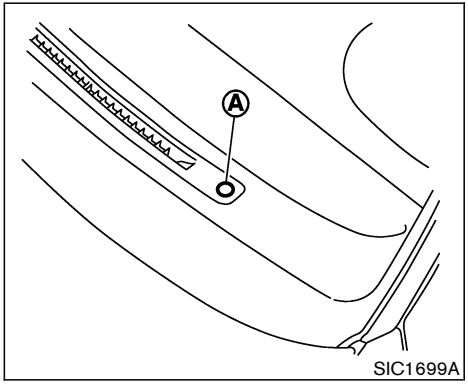

Security indicator light

This light (A) blinks whenever the ignition switch is in the LOCK, OFF or ACC position. This is normal.

How to arm the vehicle security system

1. Close all windows.

The system can be activated even if the windows are open.

2. Remove the key from the ignition switch.
3. Close and lock all doors and rear hatch/trunk lid.

   Lock all doors by using the key or the keyfob. When using the keyfob, the hazard indicators flash twice to indicate all doors are locked.
4. Confirm that the security indicator light comes on. The security indicator light glows for about 30 seconds and then blinks. The system is now activated. If, during this 30 second time period, the door is unlocked by the key or the keyfob, or the ignition key is turned to ACC or ON, the system will not activate.

Even when the driver and/or passengers are in the vehicle, the system will activate with all doors and rear hatch/trunk lid locked and ignition key off. Turn the ignition key to ACC to turn the system off.

Vehicle security system activation

The security system will give the following alarm:

- The headlights blink and the horn sounds intermittently.
- The alarm automatically turns off after approximately 50 seconds. However, the alarm reactivates if the vehicle is tampered with again. The alarm can be shut off by unlocking a door with the key, or by pushing the UNLOCK button on the keyfob.

The alarm is activated by:

- Opening the door without using the key or keyfob.
- Opening the rear hatch or the trunk lid without using the keyfob.

How to stop an activated alarm

The alarm will stop only by unlocking a door with the key, or by pushing the UNLOCK button on keyfob. The alarm will not stop if the ignition key is turned to ACC or ON.

If the system does not operate as described above, have it checked by a NISSAN dealer.

NISSAN VEHICLE IMMOBILIZER SYSTEM

The NISSAN Vehicle Immobilizer System will not allow the engine to start without the use of the registered key.

If the engine fails to start using the registered key (for example, when interference is caused by another registered key, an automated toll road device or automated payment device on the key ring), restart the engine using the following procedures:

1. Leave the ignition switch in the ON position for approximately 5 seconds.
2. Turn the ignition switch to the OFF or LOCK position and wait approximately 10 seconds.
3. Repeat steps 1 and 2.
4. Restart the engine while holding the device (which may have caused the interference) separate from the registered key.

   If this procedure allows the engine to start, NISSAN recommends placing the registered key on a separate key ring to avoid interference from other devices.

Statement related to section 15 of FCC rules for NISSAN Vehicle Immobilizer System (CONT ASSY-BCM, ANT ASSY-IMMOBILIZER)

This device complies with part 15 of the FCC Rules and RSS-210 of Industry Canada. Operation is subject to the following two conditions;

(1) This device may not cause harmful interference, and (2) this device must accept any interference received, including interference that may cause undesired operation of the device.

CHANGES OR MODIFICATIONS NOT EXPRESSLY APPROVED BY THE PARTY RESPONSIBLE FOR COMPLIANCE COULD VOID THE USER'S AUTHORITY TO OPERATE THE EQUIPMENT.

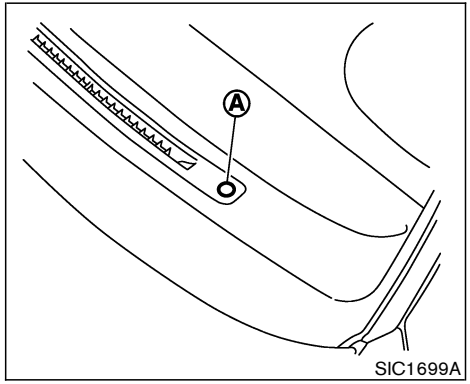

Security indicator light

This light (A) blinks whenever the ignition switch is in the LOCK, OFF or ACC position. This function indicates the security system equipped on the vehicle is operational.

If the NISSAN Vehicle Immobilizer System is malfunctioning, this light will remain on while the ignition switch is in the ON position.

If the light still remains on and/or the engine will not start, see a NISSAN dealer for NISSAN Vehicle Immobilizer System service as soon as possible. Bring all registered keys that you have when visiting a

NISSAN dealer for service.

WINDSHIELD WIPER AND WASHER SWITCH

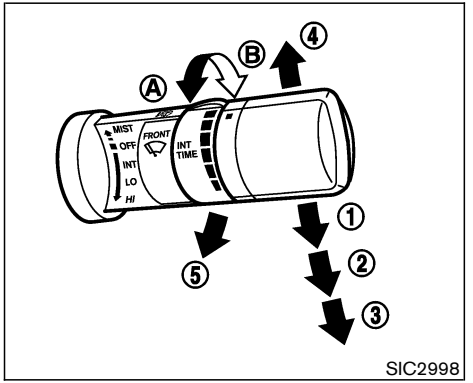

The windshield wiper and washer operates when the ignition switch is in the ON position.

Push the lever down to operate the wiper at the following speed:

1. Intermittent (INT) — intermittent operation can be adjusted by turning the knob toward A (Slower) or B (Faster).
2. Low (LO) — continuous low speed operation
3. High (HI) — continuous high speed operation

Push the lever up 4 to have one sweep operation (MIST) of the wiper.

Pull the lever toward you 5 to operate the washer. Then the wiper will also operate several times.

WARNING

In freezing temperatures the washer solution may freeze on the windshield and obscure your vision which may lead to an accident. Warm the windshield with the defroster before you wash the windshield.

CAUTION

- **Do not operate the washer continuously for more than 30 seconds.**
- **Do not operate the washer if the reservoir tank is empty.**
- **Do not fill the window washer reservoir tank with washer fluid concentrates at full strength. Some methyl alcohol based washer fluid concentrates may permanently stain the grille if spilled while filling the window washer reservoir tank.**

- **Pre-mix washer fluid concentrates with water to the manufacturer's recommended levels before pouring the fluid into the window washer reservoir tank. Do not use the window washer reservoir tank to mix the washer fluid concentrate and water.**

REAR WINDOW WIPER AND WASHER SWITCH (Coupe models)

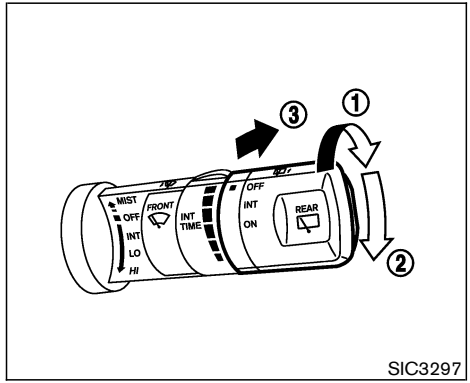

The rear window wiper and washer operate when the ignition switch is in the ON position.

Turn the switch clockwise from the OFF position to operate the wiper.

(1) Intermittent (INT) — intermittent operation (not adjustable)

(2) Low (ON) — continuous low speed operation

Push the switch forward (3) to operate the washer. Then the wiper will also operate several times.

WARNING

In freezing temperatures the washer solution may freeze on the rear window and obscure your vision. Warm the rear window with the defroster before you wash the rear window.

CAUTION

- **If the rear window wiper operation is interrupted by snow or ice, the wiper may stop moving to protect its motor. If this occurs, turn the wiper switch to OFF and remove the snow or ice on and around the wiper arms. After about 1 minute, turn the switch ON again to operate the wiper.**
- **Do not operate the washer continuously for more than 30 seconds.**
- **Do not operate the washer if the reservoir tank is empty.**
- **Do not fill the window washer reser-**

voir tank with washer fluid concentrates at full strength. Some methyl alcohol based washer fluid concentrates may permanently stain the grille if spilled while filling the window washer reservoir tank.

- Pre-mix washer fluid concentrates with water to the manufacturer's recommended levels before pouring the fluid into the window washer reservoir tank. Do not use the window washer reservoir tank to mix the washer fluid concentrate and water.

REAR WINDOW AND OUTSIDE MIRROR DEFROSTER SWITCH

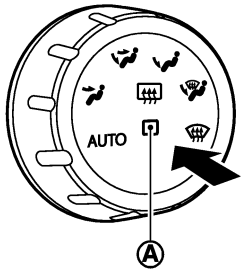

SIC3000

To defog/defrost the rear window glass and outside mirrors, start the engine and push the switch on. The indicator light (A) will come on. Push the switch again to turn the defroster off.

It will automatically turn off in approximately 15 minutes.

CAUTION

- When cleaning the inner side of the rear window, be careful not to scratch or damage the rear window defroster.
- Do not use the rear window defroster switch while the soft top is being operated or fully opened. The heat may damage the top material and/or components. (for Roadster models)

HEADLIGHT AND TURN SIGNAL SWITCH

XENON HEADLIGHTS

WARNING

HIGH VOLTAGE

- **When xenon headlights are on, they produce a high voltage. To prevent an electric shock, never attempt to modify or disassemble. Always have your xenon headlights replaced at a NISSAN dealer.**
- **Xenon headlights provide considerably more light than conventional headlights. If they are not correctly aimed, they might temporarily blind an oncoming driver or the driver ahead of you and cause a serious accident. If headlights are not aimed correctly, immediately take your vehicle to a NISSAN dealer and have the headlights adjusted correctly.**

When the xenon headlight is initially turned on, its brightness or color varies slightly. However, the color and brightness will soon stabilize.

- **The life of xenon headlights will be shortened by frequent on-off operation. It is generally desirable not to turn off the headlights for short intervals (for example, when the vehicle stops at a traffic signal). Even when the daytime running lights are active (Canada only), the xenon headlights do not turn on. This way the life of the xenon headlights is not reduced.**
- **If the xenon headlight bulb is close to burning out, the brightness will drastically decrease, the light will start blinking, or the color of the light will become reddish. If one or more of the above signs appear, contact a NISSAN dealer.**

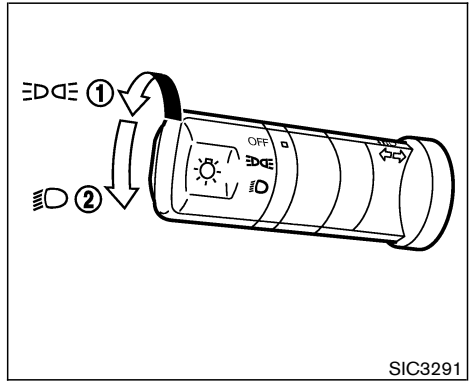

HEADLIGHT SWITCH

Lighting

(1) Turn the switch to the position:

The front park, side marker, tail, license plate and instrument lights will come on.

(2) Turn the switch to the position:

Headlights will come on and all the other lights remain on.

CAUTION

Use the headlights with the engine running to avoid discharging the vehicle battery.

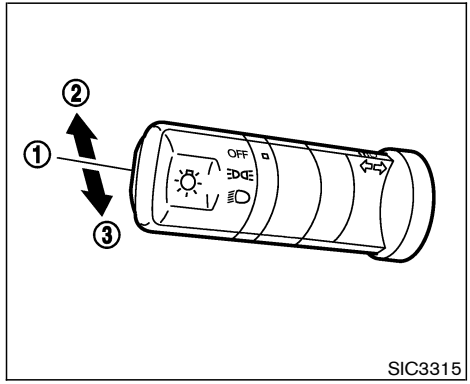

Headlight beam select

1. To select the high beam, push the lever forward. The high beam lights come on and the high beam indicator light illuminates.
2. Pull the lever back to select the low beam.
3. Pulling the lever toward you will flash the headlight high beam.

Battery saver system

- When the headlight switch is in the or position while the ignition switch is in the ON position, the lights will automatically turn off 5 minutes after the ignition switch has been turned to the OFF position.
- After the headlights automatically turn off with the headlight switch in the or position, the headlights will illuminate again for 5 minutes if the headlight switch is turned to the OFF position and then turned to the or position.

CAUTION

Even though the battery saver feature automatically turns off the headlights after a period of time, you should turn the headlight switch to the OFF position when the engine is not running to avoid discharging the vehicle battery.

DAYTIME RUNNING LIGHT SYSTEM (Canada only)

The headlights (low beam) automatically illuminate when the engine is started with the parking brake released. The daytime running lights operate with the headlight switch in the OFF position or in the position.

If the parking brake is applied before the engine is started, the daytime running lights do not

illuminate. The daytime running lights illuminate once the parking brake is released. The daytime running lights will remain on until the ignition switch is turned off.

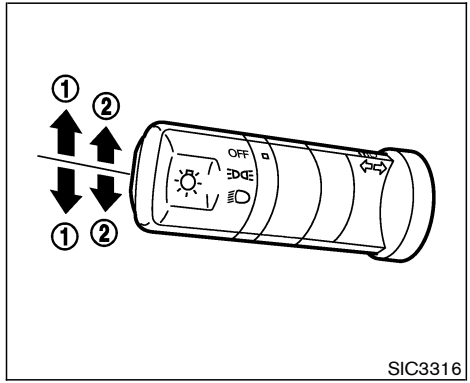

TURN SIGNAL SWITCH

① Turn signal

Move the lever up or down to signal the turning direction. When the turn is completed, the turn signals cancel automatically.

② Lane change signal

To indicate a lane change, move the lever up or down to the point where lights begin flashing.

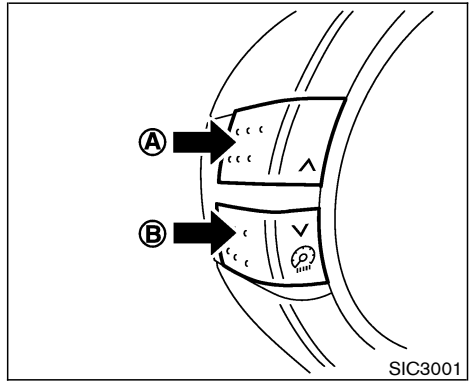

INSTRUMENT BRIGHTNESS CONTROL

The instrument brightness control operates when the light switch is in the ≡DC≡ or ≣D position and the ignition switch is in the ON position.

To adjust the brightness of instrument panel lights, press the control switches located on the left side of the meter panel. Pressing the upper switch Ⓐ will brighten the lights. The lower switch Ⓑ will dim the lights. Repeatedly pressing the lower switch will turn the lights off.

HAZARD WARNING FLASHER SWITCH

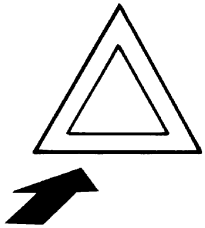

SIC2475

Push the switch (located on the front part of the center console) on to warn other drivers when you must stop or park under emergency conditions. All turn signal lights will flash.

Some state or provincial laws may prohibit the use of the hazard warning flasher switch while driving.

WARNING

- **If stopping for an emergency, be sure to move the vehicle well off the road.**
- **Do not use the hazard warning flashers while moving on the highway unless unusual circumstances force you to drive so slowly that your vehicle might become a hazard to other traffic.**
- **Turn signals do not work when the hazard warning flasher lights are on.**

The flasher will operate with the ignition switch in any position.

HORN

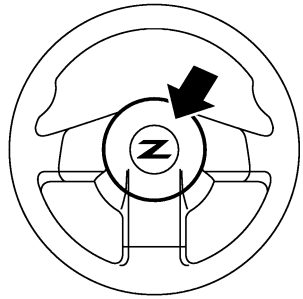

SIC2195

To sound the horn, push the center pad area of the steering wheel.

WARNING

Do not disassemble the horn. Doing so could affect proper operation of the supplemental front air bag system. Tampering with the supplemental front air bag system may result in serious personal injury.

HEATED SEATS (if so equipped)

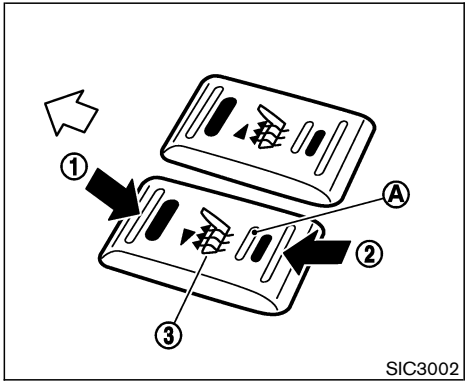

The seats are warmed by built-in heaters. The switches are located on the center console.

1. Start the engine.
2. Select heat range.

   (1) For high heat, push the ▬ (High) side of the switch.

   (2) For low heat, push the ▬ (Low) side of the switch.

   (3) For no heat, the switch has a center OFF position between low and high.

   The indicator light (A) in the switch will illuminate when low or high is selected.

   The heater is controlled by a thermostat, automatically turning the heater on and off. The indicator light will remain on as long as the switch is on.

3. When the vehicle's interior is warmed, or before you leave the vehicle, be sure to turn the switch to the OFF position (3).

An optional ventilated net seat has this built-in heater only in the seat cushion part, not in the seatback.

⚠ CAUTION

- **The battery could be discharged if the seat heater is operated while the engine is not running.**
- **Do not use the seat heater for extended periods or when no one is using the seat.**
- **Do not put anything on the seat which insulates heat, such as a blanket, cushion, seat cover, etc. Otherwise, the seat may become overheated.**
- **Do not place anything hard or heavy on the seat or pierce it with a pin or similar object. This may result in damage to the heater.**
- **Any liquid spilled on the heated seat should be removed immediately with a dry cloth.**
- **When cleaning the seat, never use gasoline, benzine, thinner, or any similar materials.**
- **If any abnormalities are found or the heated seat does not operate, turn the switch off and have the system checked by a NISSAN dealer.**

VEHICLE DYNAMIC CONTROL (VDC) OFF SWITCH (if so equipped)

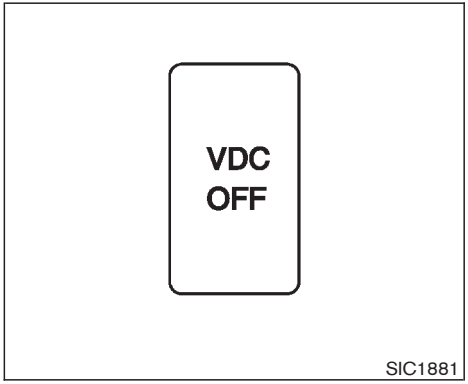

The vehicle should be driven with the Vehicle Dynamic Control (VDC) system on for most driving conditions.

If the vehicle is stuck in mud or snow, the VDC system reduces the engine output to reduce wheel spin. The engine speed will be reduced even if the accelerator is depressed to the floor. If maximum engine power is needed to free a stuck vehicle, turn the VDC system off.

To turn off the VDC system, push the VDC OFF switch (located on the lower side of the instrument panel). The VDC OFF indicator light will come on.

Push the VDC OFF switch again or restart the engine to turn on the system. See “Vehicle Dynamic Control (VDC) system” in the “5. Starting and driving” section.

TRACTION CONTROL SYSTEM (TCS) OFF SWITCH (if so equipped)

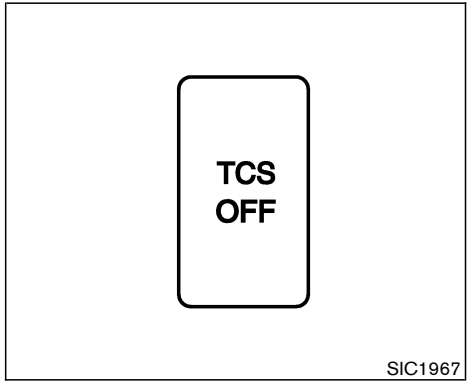

The vehicle should be driven with the Traction Control System (TCS) on for most driving conditions.

If the vehicle is stuck in mud or snow, the TCS reduces the engine output to reduce wheel spin. The engine speed will be reduced even if the accelerator is depressed to the floor. If maximum engine power is needed to free a stuck vehicle, turn the TCS off.

To turn off the TCS, push the TCS OFF switch (located on the lower side of the instrument panel). The TCS OFF indicator light will come on. Push it again or restart the engine to turn the system back on.

See “Traction Control System (TCS)” in the “5. Starting and driving” section.

CLOCK

The digital clock (in the audio unit) displays time when the ignition switch is in the ACC or ON position.

If the battery cable is disconnected, the clock will reset its time and the correct time will not be indicated. Readjust the time.

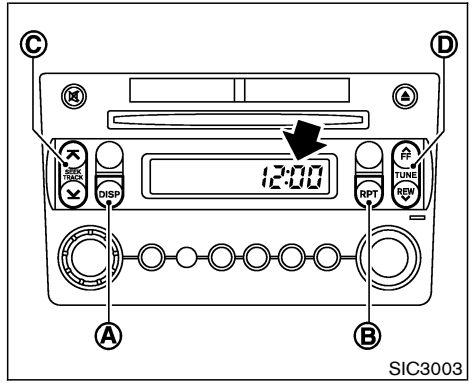

ADJUSTING THE TIME

Adjust the time in the following steps:

1. Switch the display to the clock adjusting mode.
   Type A (audio with 1 CD player):
   Push and hold the DISP (Clock) button Ⓐ until the clock display starts to flash.

   Type B (audio with 6 CD changer):
   Push and hold the RPT button Ⓑ until the clock display starts to flash.
2. Push the SEEK/TRACK button Ⓒ (⌅ , ⌄) to adjust the hour. Push the TUNE button Ⓓ (⌃ , ⌄) to adjust the

minute. Pushing the ⌅ or ⌃ side will advance the time and the ⌄ or ⌄ side will turn back the time.

3. Push the DISP button Ⓐ (Type A), or RPT Ⓑ button (Type B) to finish the adjustment.

Resetting

Type A (audio with 1 CD player):
Push the DISP Ⓐ and TUNE Ⓓ buttons.

Type B (audio with 6 CD changer):
Push the RPT Ⓑ and TUNE Ⓓ buttons.

The time will be set to a time signal.

For example, if these buttons are pushed while the time is between 8:00 and 8:29, the display will be reset to 8:00. If pushed while it is between 8:30 and 8:59, the display will be reset to 9:00. At the same time the display will return to the previous audio mode.

POWER OUTLET

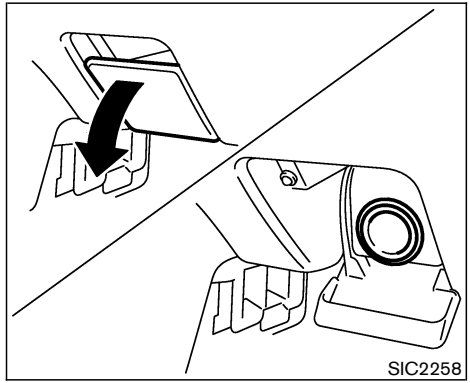

Front

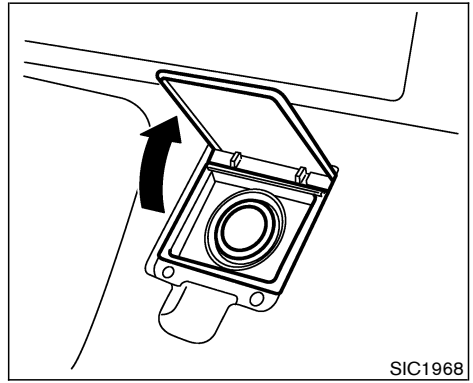

Rear

The power outlet is for powering electrical accessories such as cellular telephones.

CAUTION

- **The outlet and plug may be hot during or immediately after use.**
- **This power outlet is not designed for use with a cigarette lighter unit.**
- **Do not use accessories that exceed a combined power draw of 12 volt, 120W (10A) for both the front and rear power outlets. Do not use double adapters or more than one accessory with a single power outlet.**
- **Use power outlet with the engine running to avoid discharging the vehicle battery.**
- **Avoid using power outlets when the air conditioner, headlights or rear window defroster is on.**
- **Before inserting or disconnecting a plug, be sure to turn off the power switch of electrical accessory being**

used or the ACC power of the vehicle.

- **Push the plug in as far as it will go. If good contact is not made, the plug may overheat or the internal temperature fuse may open.**
- **Do not allow water to contact the outlet. When not in use, be sure to close the lid.**

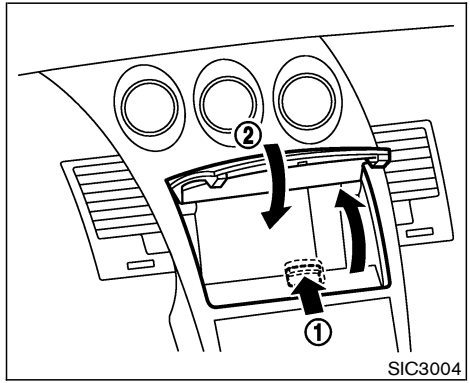

INSTRUMENT POCKET (except for navigation system equipped models)

To open the lid, push the knob up (1).

To close, pull the lid down (2).

WARNING

Keep the pocket lid closed while driving to help prevent injury in an accident or a sudden stop.

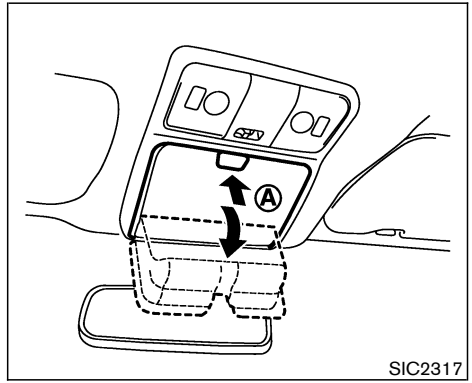

SUNGLASSES HOLDER (Coupe models)

The sunglasses holder can be opened by pushing the button (A).

WARNING

Keep the sunglasses holder closed while driving to prevent an accident.

CAUTION

- **Do not use for anything other than glasses.**
- **Do not leave sunglasses in the sunglasses holder while parking in direct sunlight. The heat may damage the sunglasses.**

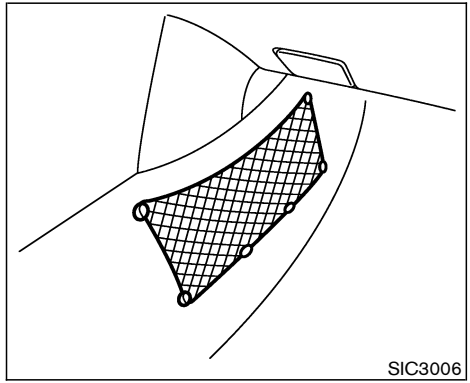

CARGO NET

The net located under the instrument panel (passenger's side) can be used to hold small objects.

The net can be removed when necessary.

WARNING

- **Do not place sharp objects in the net. Such objects may become dangerous projectiles and cause injury when the vehicle is moving or if the vehicle is involved in a collision.**
- **The cargo restrained in the net must not exceed 4 lb (2 kg) or the net may not stay secured.**

CUP HOLDERS

CAUTION

- **Avoid abrupt starting and braking when the cup holder is being used to prevent spilling the drink. If the liquid is hot, it can scald you or your passenger.**
- **Use only soft cups in the cup holder. Hard objects can injure you in an accident.**

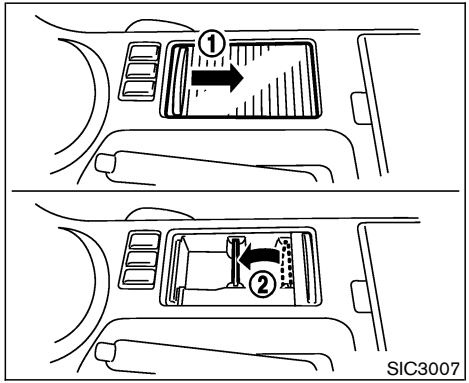

Front

Type A:

To open the cup holder, slide the lid (1).

Install the partition plate into the slit (2).

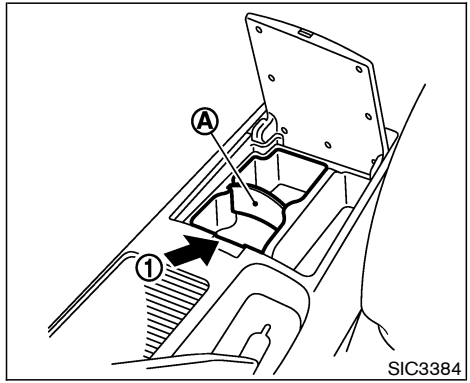

Type B:

Larger containers can be placed in the console box. Push the button (1) to open the console box lid. The partition (A) can be removed.

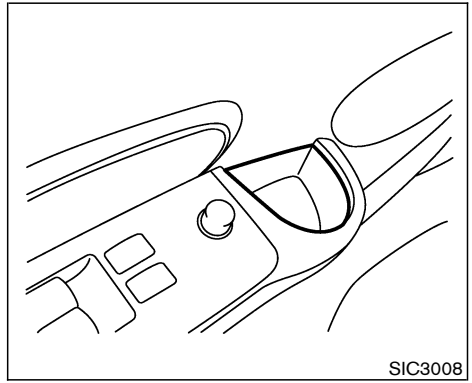

Soft bottle holder

CAUTION

- **Do not use bottle holder for any other objects that could be thrown about in the vehicle and possibly injure people during sudden braking or an accident.**
- **Do not use bottle holder for open liquid containers.**

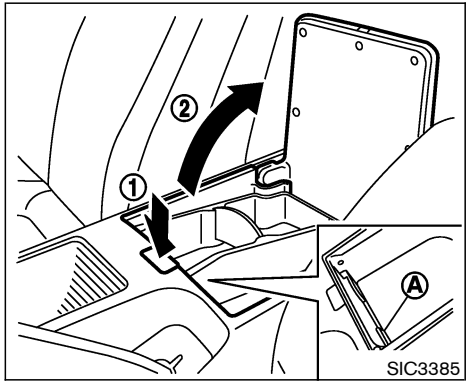

CONSOLE BOX

Pushing the button (1) will open the lid slightly, then pull up the lid manually (2). The center console box is equipped with a card holder (A).

The inside tray (cup holder and partitions) can be removed by pulling it up.

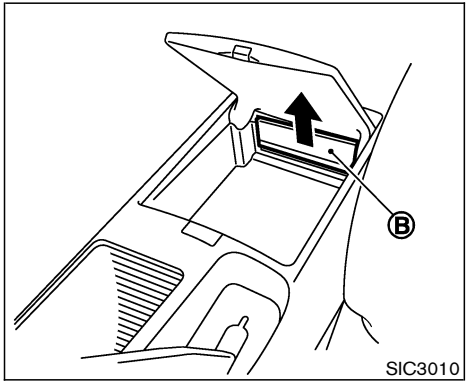

If objects (coins, etc.) fall into the rear section of the center console box, remove the rear wall (B) of the box as shown, and pick up the objects.

CAUTION

Be careful not to pinch your fingers when removing the rear wall (B).

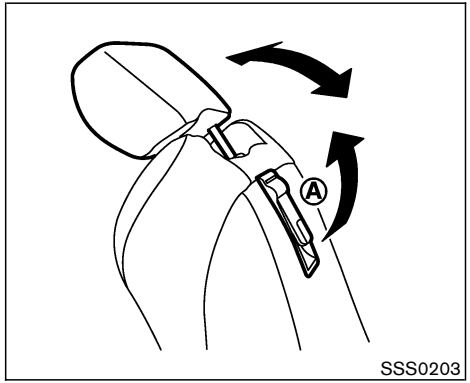

Coupe model

REAR FLOOR BOX

The rear floor box is located behind the passenger's seat.

Fold the passenger's seatback forward to access the rear floor box.

Coupe model: Pull on the lever (A).

Roadster model: Push the upper portion of the power seatback tilt switch (B).

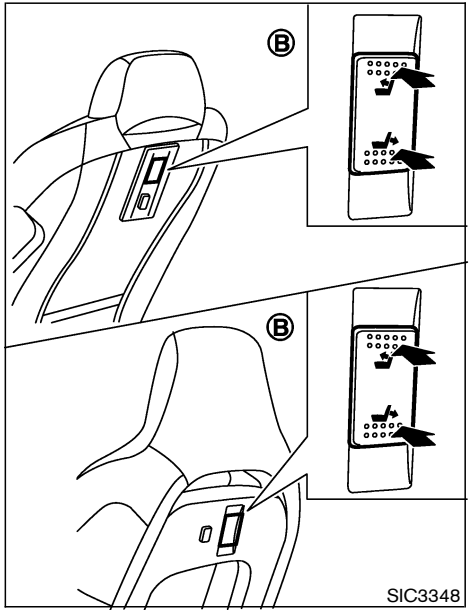

Roadster model

Return the passenger's seatback to a locked position after using the rear floor box.

Coupe model: Pull up on the lever (A) and return the seatback.

Roadster model: Push the lower portion of the power seatback tilt switch (B).

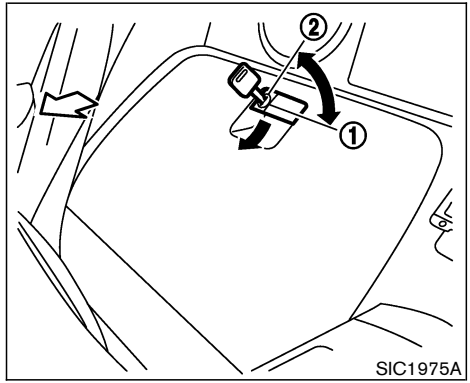

The rear floor box may be opened by pulling the handle. The rear floor box light illuminates when the box lid is opened with the headlight switch ON.

When locking (1) or unlocking (2) the rear floor box, use the master key.

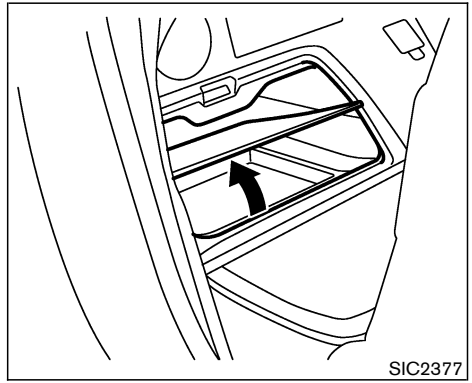

The rear floor box has additional space under the bottom plate.

WARNING

Keep rear floor box lid closed while driving to help prevent injury in an accident or a sudden stop.

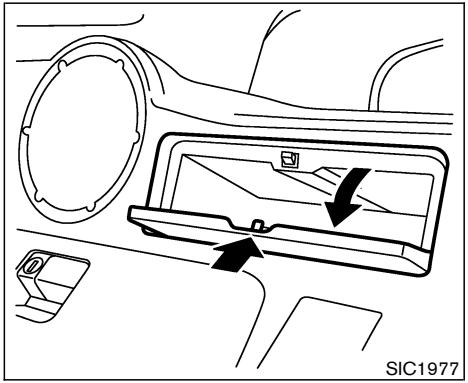

REAR PARCEL BOX

Push the upper part of the lid to open the rear parcel box. For models without the Navigation system, two boxes are available.

WARNING

Keep rear parcel box lid closed while driving to help prevent injury in an accident or a sudden stop.

STOWING GOLF BAGS

Follow the instructions here to stow golf bags in the rear cargo space of your vehicle. Normally two bags can be stowed in the luggage area (Coupe models) or one bag in the trunk (Roadster models).

However, in some cases you may not be able to stow the above number of golf bags in your vehicle, depending on their sizes or types.

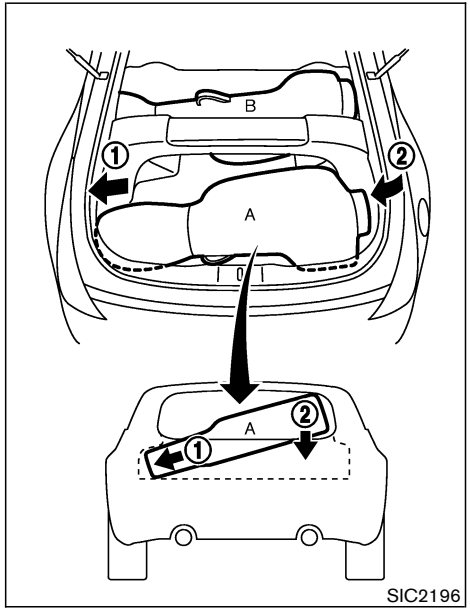

Coupe models

Normally, two standard golf bags can be stowed across the strut tower bar in the luggage area as illustrated (A and B). When stowing a golf bag A in the rear space, insert the top of the golf bag

into left side of the luggage area ① then put the bag down ②.

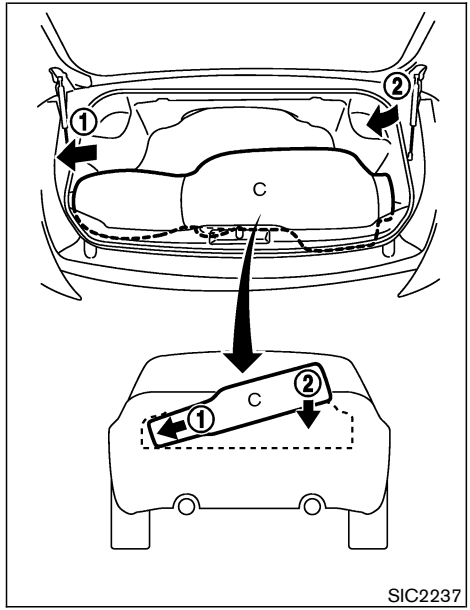

Roadster models

Normally, one standard golf bag C can be stowed in the trunk. Insert the top of the golf bag into left side of the trunk ① then put the bag down ②.

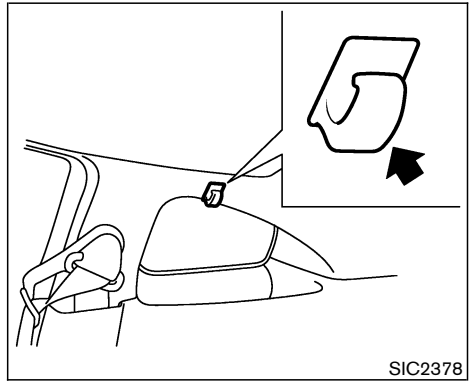

COAT HOOK (Coupe models)

The hooks are locked above the side windows as shown in the illustration.

CAUTION

Do not apply a total load of more than 2 lb (1 kg) to a single hook.

POWER WINDOWS

WARNING

- **Make sure that all passengers have their hands, etc. inside the vehicle while it is in motion and before closing the windows. Use the window lock switch to prevent unexpected use of the power windows.**
- **Do not leave children unattended inside the vehicle. They could unknowingly activate switches or controls and become trapped in a window. Unattended children could become involved in serious accidents.**

The power windows operate when the ignition key is in the ON position and for about 45 seconds, after the ignition key is turned to the OFF position. If the driver's door or the front passenger's door is opened during this period of about 45 seconds, power to the windows is canceled.

The power window switches will be deactivated during the soft top operation. (Roadster models)

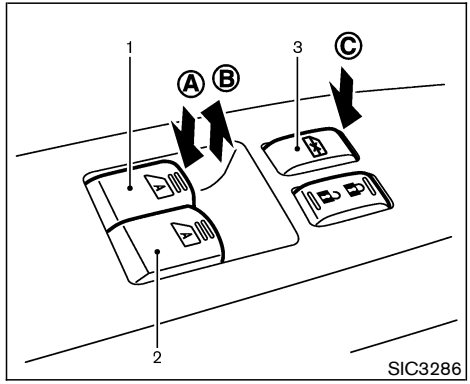

Driver's side power window switch

1. Driver side window
2. Passenger side window
3. Window lock button

To open or close the window, push down (A) or pull up (B) the switch and hold it. The main switch (driver side switches) will open or close all the windows.

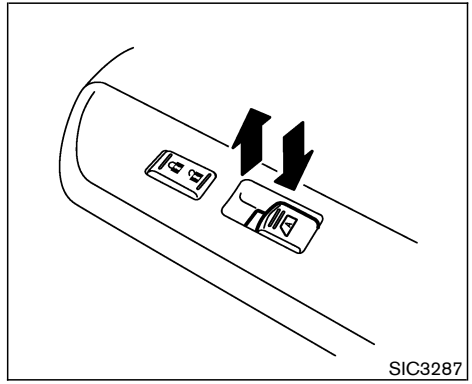

Passenger side power window switch

The passenger side switch will open or close only the corresponding window. To open or close the window, hold the switch down or up.

Locking passenger's window

When the lock button (C) is pushed in, only the driver side window can be opened or closed. Push it in again to cancel.

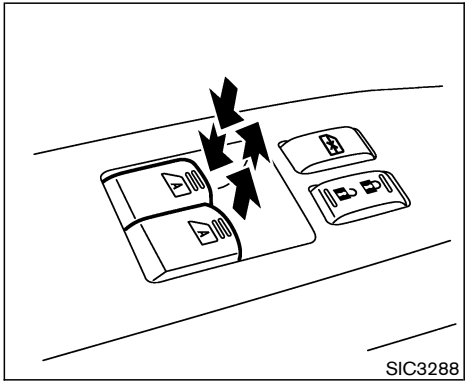

Automatic operation

To fully open or close the window, completely press or lift the switch and release it; it need not be held. The window will automatically open or close all the way. To stop the window, just press or lift the switch on the opposite side.

Auto reverse function

If the control unit detects something caught in a window as it moves up, the window will be immediately lowered.

The auto reverse function can be activated when a window is closed by automatic operation when the ignition key is in the ON position or for about 45 seconds after the ignition key is turned to the OFF position.

Depending on the environment or driving conditions, the auto reverse function may be activated if an impact or load similar to something being caught in the window occurs.

WARNING

There are some small distances immediately before the closed position which cannot be detected. Make sure that all passengers have their hands, etc., inside the vehicle before closing the window.

Automatic window lowering (Roadster models)

When the soft top operating switch is pressed, the power windows will automatically be lowered completely. The windows do not rise automatically after the soft top open/close operation is completed. Use the power window switches to raise them.

AUTOMATIC ADJUSTING FUNCTION

CAUTION

When the battery cable is removed from the battery terminal, do not close either of the front doors. The automatic window adjusting function will not work, and the side roof panel/top side rail may be damaged.

The power window has an automatic adjusting function. When the door is being opened, the window is automatically lowered slightly to avoid contact between the window and the side roof panel/top side rail. When the door is closed, the window is automatically raised slightly.

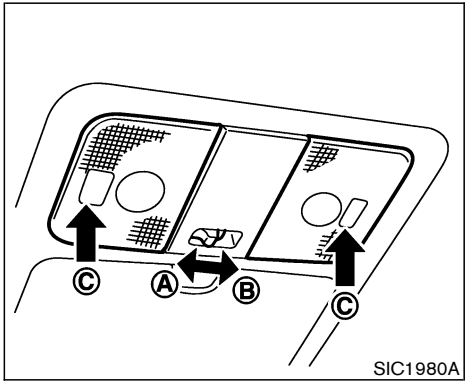

Coupe models

ROOM LIGHT

The interior light has a two-position switch. (Ⓐ: DOOR, Ⓑ: OFF)

When the switch is in the DOOR position, the light will illuminate when a door is opened.

The light will stay on for about 30 seconds when:

- The doors are unlocked by the keyfob, a key or the power door lock switch while all doors are closed.
- The driver's door is opened and then closed while the key is removed from the ignition switch.

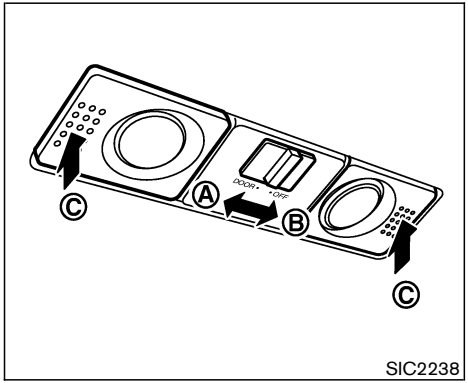

Roadster models

- The key is removed from the ignition switch while all doors are closed.

The interior light will turn off while the 30 second timer is activated, when:

- The driver's door is locked either with the keyfob, a key or the power door lock switch.
- The ignition switch is turned ON.

MAP LIGHTS

To turn on the light, push the plastic surface Ⓒ of the light. Push it again to turn off the light.

When the map light stays on, it will automatically turn off 30 minutes after the ignition switch has been turned to the OFF position. To turn on the light again, turn the ignition switch to the ON position.

The map and vanity mirror lights will automatically turn off 30 minutes after the latest operation of the following with the ignition switch in the ACC or OFF position:

- Opening or closing any door
- Locking or unlocking with the keyfob, a key or the power door lock switch
- Inserting or removing a key from the ignition switch

These lights will turn on again when any of the above operations is performed after the lights have turned off automatically. (The lights will turn off 30 minutes after the latest operation of the above as well.)

CAUTION

- **Turn off the lights when you leave the vehicle.**
- **Do not use for extended periods of time with the engine stopped. This could result in a discharged battery.**

VANITY MIRROR LIGHT

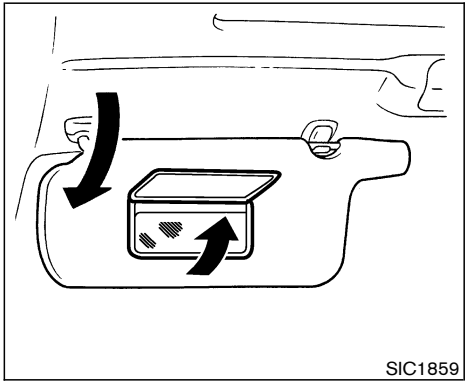

The light on the vanity mirror will turn on when the cover on the vanity mirror is opened.

When the vanity mirror light stays on, it will automatically turn off 30 minutes after the ignition switch has been turned to the OFF position. To turn on the light again, turn the ignition switch to the ON position.

LUGGAGE COMPARTMENT LIGHT (Coupe models)

The light illuminates when the rear hatch is opened. When the rear hatch is closed, the light will go off.

TRUNK LIGHT (Roadster models)

The light illuminates when the trunk lid is opened. When the trunk lid is closed, the light will go off.

HomeLink® UNIVERSAL TRANSCEIVER (if so equipped)

The HomeLink® Universal Transceiver provides a convenient way to consolidate the functions of up to three individual hand-held transmitters into one built-in device.

HomeLink® Universal Transceiver:

- Will operate most Radio Frequency (RF) devices such as garage doors, gates, home and office lighting, entry door locks and security systems.
- Is powered by your vehicle's battery. No separate batteries are required. If the vehicle's battery is discharged or is disconnected, HomeLink® will retain all programming.

Once the HomeLink® Universal Transceiver is programmed, retain the original transmitter for future programming procedures (for example, new vehicle purchases). Upon sale of the vehicle, the programmed HomeLink® Universal Transceiver buttons should be erased for security purposes. For additional information, refer to "Programming HomeLink®" later in this section.

WARNING

- **Do not use the HomeLink® Universal Transceiver with any garage door opener that lacks safety stop and reverse features as required by federal safety standards. (These standards became effective for opener models manufactured after April 1, 1982). A garage door opener which cannot detect an object in the path of a closing garage door and then automatically stop and reverse, does not meet current federal safety standards. Using a garage door opener without these features increases the risk of serious injury or death.**
- **During the programming procedure, your garage door or security gate will open or close (if the transmitter is within range). Make sure that people and objects are clear of the garage door, gate, etc. that you are programming.**
- **Your vehicle's engine should be turned off while programming the HomeLink® Universal Transceiver.**

PROGRAMMING HomeLink®

To program your HomeLink® Transceiver to operate a garage door, gate, or entry door opener, home or office lighting, you need to be at the same location as the device. Note: Garage door openers (manufactured after 1996) have "rolling code protection". To program a garage door opener equipped with "rolling code protection"; you will need to use a ladder to get up to the garage door opener motor to be able to access the training button.

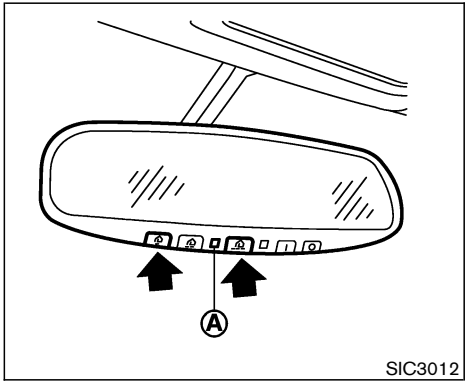

1. To begin, press and hold the 2 outer HomeLink® buttons (to clear the memory) until the indicator light Ⓐ blinks (after 20 seconds). Release both buttons.
2. Position the end of the hand-held transmitter 1 - 3 in (26 - 76 mm) away from the HomeLink® surface.

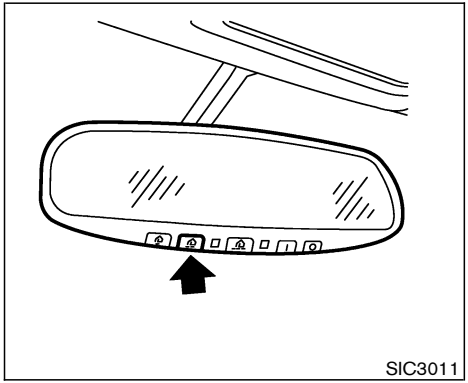

3. Using both hands, simultaneously press and hold both the HomeLink® button you want to program and the hand-held transmitter button.
   DO NOT release the buttons until step 4 has been completed.
4. Hold down both buttons until the indicator light on the HomeLink® flashes, changing from a “slow blink” to a “rapid blink”. When the indicator light flashes rapidly, both buttons may be released. The rapidly flashing light indicates successful programming. To activate the garage door or other programmed device, press and hold the programmed HomeLink® button - releasing when the device begins to activate.
5. If the indicator light on the HomeLink® blinks rapidly for two seconds and then turns solid, HomeLink® has picked up a “rolling code” garage door opener signal. You will need to proceed with the next steps to train the HomeLink® to complete the programming which may require a ladder and another person for convenience.
6. Press and release the training button located on the garage door opener’s motor to activate the “training mode”. This button is usually located near the antenna wire that hangs down from the motor. If the wire originates from under a light lens, you will need to remove the lens to access the training button.

NOTE:

Once you have pressed and released the training button on the garage door opener’s motor and the “training light” is lit, you have 30 seconds in which to perform step 7. Use the help of a second person for convenience to assist when performing this step.

7. Quickly within 30 seconds of pressing and releasing the garage door opener program button, firmly press and release the HomeLink® button you’ve just programmed.

Press and release the HomeLink® button up to three times to complete the training.

8. Your HomeLink® button should now be programmed.

To program the remaining HomeLink® buttons for additional door or gate openers, follow steps 2-8 only.

NOTE:

Do not repeat step 1 unless you want to "clear" all previously programmed HomeLink® buttons.

If you have any questions or are having difficulty programming your HomeLink® buttons, refer to the HomeLink® web site at: www.homelink.com or call 1-800-355-3515.

PROGRAMMING HomeLink® FOR CANADIAN CUSTOMERS

Prior to 1992, D.O.C. regulations required hand-held transmitters to stop transmitting after 2 seconds. To program your hand-held transmitter to HomeLink®, continue to press and hold the HomeLink® button (note steps 2 through 4 under "Programming HomeLink®") while you press and re-press ("cycle") your hand-held transmitter every 2 seconds until the indicator light flashes rapidly (indicating successful programming).

NOTE:

When programming a garage door opener, etc., it is advised to unplug the device during the "cycling" process to prevent possible damage to the garage door opener components.

OPERATING THE HomeLink® UNIVERSAL TRANSCEIVER

The HomeLink® Universal Transceiver (once programmed) may now be used to activate the garage door, etc. To operate, simply press the appropriate programmed HomeLink® Universal Transceiver button. The red indicator light will illuminate while the signal is being transmitted.

PROGRAMMING TROUBLE-DIAGNOSIS

If the HomeLink® does not quickly learn the hand-held transmitter information:

- replace the hand-held transmitter batteries with new batteries.
- position the hand-held transmitter with its battery area facing away from the HomeLink® surface.
- press and hold both the HomeLink® and hand-held transmitter buttons without interruption.
- position the hand-held transmitter 2 to 5 in (50 to 127 mm) away from the HomeLink® surface. Hold the transmitter in that position for up to 15 seconds. If HomeLink® is not programmed within that time, try holding the transmitter in another position - keeping the indicator light in view at all times.

If you continue to have programming difficulties, please contact the NISSAN Consumer Affairs Department. The phone numbers are located in the Foreword of this Owner's Manual.

CLEARING THE PROGRAMMED INFORMATION

Individual buttons cannot be cleared, however to clear all programming, press and hold the two outside buttons and release when the indicator light begins to flash (approximately 20 seconds).

REPROGRAMMING A SINGLE HomeLink® BUTTON

To reprogram a HomeLink® Universal Transceiver button, complete the following.

1. Press and hold the desired HomeLink® button. **Do not** release the button until step 4 has been completed.
2. When the indicator light begins to flash slowly (after 20 seconds), position the hand-held transmitter 2 to 5 in (50 to 127 mm)

away from the HomeLink® surface.

3. Press and hold the hand-held transmitter button.
4. The HomeLink® indicator light will flash, first slowly and then rapidly. When the indicator light begins to flash rapidly, release both buttons.

The HomeLink® Universal Transceiver button has now been reprogrammed. The new device can be activated by pushing the HomeLink® button that was just programmed. This procedure will not affect any other programmed HomeLink® buttons.

IF YOUR VEHICLE IS STOLEN

If your vehicle is stolen, you should change the codes of any non-rolling code device that has been programmed into HomeLink®. Consult the Owner's Manual of each device or call the manufacturer or dealer of those devices for additional information.

When your vehicle is recovered, you will need to reprogram the HomeLink® Universal Transceiver with your new transmitter information.

FCC Notice:

This device complies with FCC rules part 15. Operation is subject to the following two conditions: (1) This device may not cause harmful interference and (2) This device must accept any interference that may be received, including interference that may cause undesired operation.

The transmitter has been tested and complies with FCC and DOC/MDC rules. Changes or modifications not expressly approved by the party responsible for compliance could void the user's authority to operate the device.

DOC: ISTC 1763K1313

FCC I.D.: CB2V67690

MEMO

MEMO

3 Pre-driving checks and adjustments

Keys 3-2
NISSAN Vehicle Immobilizer System keys 3-2
Doors 3-3
Locking with key 3-3
Locking with inside lock knob 3-4
Locking with power door lock switch 3-4
Remote keyless entry system 3-5
How to use remote keyless entry system 3-5
Hood 3-8
Rear hatch (Coupe models) 3-9
Opener operation 3-9
Secondary rear hatch release 3-10
Trunk lid (Roadster models) 3-10
Opener operation 3-10
Interior trunk lid release 3-11
Secondary trunk lid release 3-12
Soft top (Roadster models) 3-13
Before operating the top 3-13
When operating the top 3-15
Opening the top 3-18
Closing the top 3-19
If the top does not open or close electrically 3-19
Care of the soft top and the vehicle body 3-22
Fuel-filler door 3-23
Opener operation 3-23
Fuel-filler cap 3-23
Steering wheel 3-25
Tilt operation 3-25
Sun visors 3-25
Mirrors 3-26
Inside mirror 3-26
Automatic anti-glare inside mirror (if so equipped) 3-26
Outside mirrors 3-27

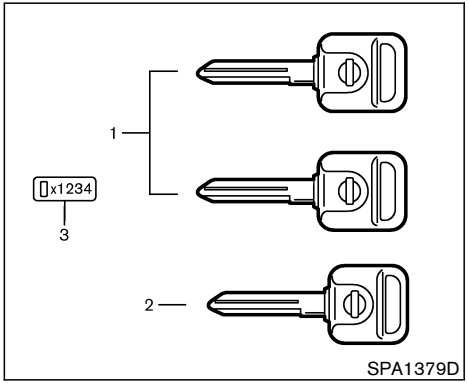

1. Master keys*
2. Valet key*
3. Key number plate

(* With built-in transponder chip)

A key number plate is supplied with your keys. Record the key number and keep it in a safe place (such as your wallet), not in the vehicle. If you lose your keys, see a NISSAN dealer for duplicates by using the key number. NISSAN does not record any key numbers so it is very important to keep track of your key number plate.

A key number is only necessary when you have lost all keys and do not have one to duplicate from. If you still have a key, this key can be duplicated by a NISSAN dealer.

NISSAN VEHICLE IMMOBILIZER SYSTEM KEYS

You can only drive your vehicle using the master or valet keys which are registered to the NISSAN Vehicle Immobilizer System components in your vehicle. These keys have a transponder chip in the key head.

The master key can be used for all the locks.

The valet key cannot be used for the rear floor box lock. To protect belongings when you leave a key with someone, give them the valet key only.

Never leave these keys in the vehicle.

Additional or replacement keys:

If you still have a key, the key number is not necessary when you need extra NISSAN Vehicle Immobilizer System keys. Your dealer can duplicate your existing key. As many as 5 keys can be used with one vehicle. You should bring all the registered keys that you have to a NISSAN dealer for registration. This is because the registration process will erase the memory of all key codes previously registered into the NISSAN Vehicle Immobilizer System. After the registration process, these components will only recognize keys coded into the NISSAN Vehicle Immobilizer System during registration. Any key that is not given to your dealer at the time of registration will no longer be able to start your vehicle.

CAUTION

Do not allow the NISSAN Vehicle Immobilizer System key, which contains an electrical transponder, to come in contact with salt water. This could cause the system to malfunction.

WARNING

- **Always have the doors locked while driving. Along with the use of seat belts, this provides greater safety in the event of an accident by helping to prevent persons from being thrown from the vehicle. This also helps keep children and others from unintentionally opening the doors, and will help keep out intruders.**
- **Before opening any door, always look for and avoid oncoming traffic.**
- **Do not leave children unattended inside the vehicle. They could unknowingly activate switches or controls. Unattended children could become involved in serious accidents.**

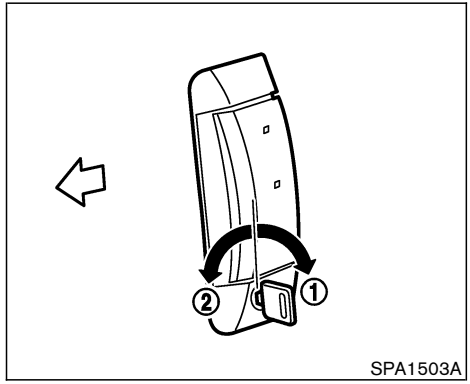

LOCKING WITH KEY

The power door lock system allows you to lock or unlock all doors including the rear hatch/trunk lid simultaneously.

- Turning the driver's door key to the rear of the vehicle (1) will lock all doors including the rear hatch/trunk lid.
- Turning the driver's door key one time to the front of the vehicle (2) will unlock the driver's door and rear hatch/trunk lid. From that position, returning the key to neutral (where the key can only be removed and inserted) and turning it to the front again within 5 seconds will unlock the passenger's door.

Opening and closing windows

Turn the driver's door key towards the front of the vehicle (UNLOCK position) and hold for about 1 second, all door windows will begin to lower.

To close all door windows, turn the key to the LOCK position and hold for about 1 second.

To stop opening or closing, turn the key to the neutral position.

In the event of a hand in the way, or other obstruction, the auto reverse function will activate.

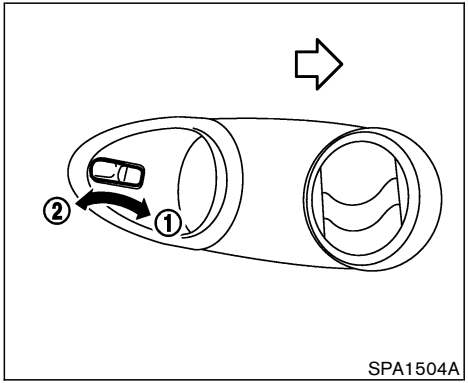

LOCKING WITH INSIDE LOCK KNOB

Pushing the door inside lock knob to the LOCK ① or UNLOCK ② position will lock or unlock the corresponding door. (The rear hatch/trunk lid lock is linked with the driver side door lock.)

To individually lock the doors from the outside (without a key), move the inside lock knob to the LOCK position. Then close the door.

When locking the door without a key, be sure not to leave the key inside the vehicle.

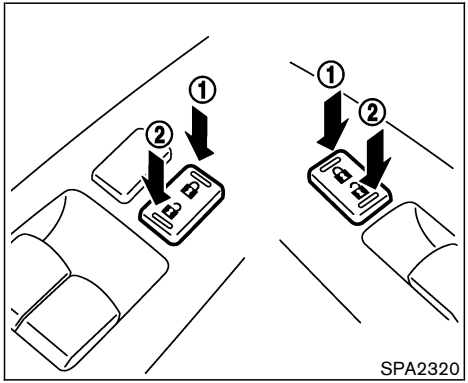

LOCKING WITH POWER DOOR LOCK SWITCH

All doors will be locked when the power door lock switch is pushed to the LOCK position ① with the driver's or front passenger's door open. Then close the door and all doors will be locked.

When locking the door this way, be certain not to leave the key inside the vehicle.

To unlock, push the power door lock switch to the UNLOCK position ②.

Lockout protection

When the power door lock switch (driver or front passenger) is moved to the LOCK position ① with the key in the ignition and any door open, all doors will lock and unlock automatically. This helps to prevent the keys from being accidentally locked inside the vehicle.

REMOTE KEYLESS ENTRY SYSTEM

It is possible to lock/unlock all doors (including the rear hatch/trunk lid), release the rear hatch/trunk lid and activate the panic alarm by using the keyfob from outside the vehicle.

Before locking the doors, make sure the key is not left in the vehicle.

The keyfob can operate at a distance of approximately 33 ft (10 m) from the vehicle. (The effective distance depends upon the conditions around the vehicle.)

As many as 5 keyfobs can be used with one vehicle. For information concerning the purchase and use of additional keyfobs, contact a NISSAN dealer.

The keyfob will not function when:

- the battery is discharged,
- the distance between the vehicle and the keyfob is over 33 ft (10 m).

The panic alarm and the rear hatch/trunk lid release will not activate when the key is in the ignition switch.

CAUTION

The following conditions or occurrences will damage the keyfob.

- **Do not allow the keyfob to become wet.**
- **Do not drop the keyfob.**
- **Do not strike the keyfob sharply against another object.**
- **Do not place the keyfob for an extended period in an area where temperatures exceed 140°F (60°C).**

If a keyfob is lost or stolen, NISSAN recommends erasing the ID code of that keyfob. This will prevent the keyfob from unauthorized use to unlock the vehicle. For information regarding the erasing procedure, please contact a NISSAN dealer.

For information regarding the replacement of a battery, see “Keyfob battery replacement” in the “8. Maintenance and do-it-yourself” section.

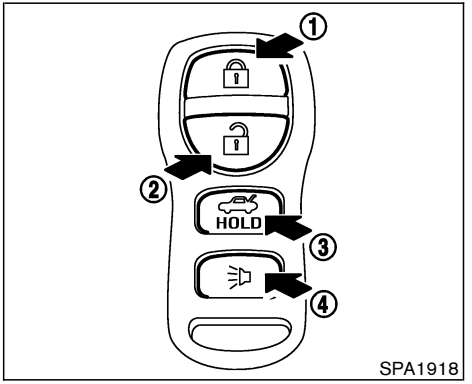

1 LOCK button

2 UNLOCK button

3 HATCH/TRUNK button

4 PANIC button

HOW TO USE REMOTE KEYLESS ENTRY SYSTEM

Locking doors

1. Remove the ignition key.*1 *2
2. Close all the doors.*3
3. Push the LOCK button on the keyfob.

4. All the doors will lock.

All of the doors will lock when the LOCK button on the keyfob is pushed even though a door remains open and/or the ignition switch is in the ON position.

5. The hazard indicator flashes twice and the horn chirps once.

- When the LOCK button is pushed with all doors locked, the hazard indicator flashes twice and the horn chirps once as a reminder that the doors are already locked.

*1: Doors lock with the keyfob while a key is in the ignition switch. However, the panic alarm and the rear hatch/trunk lid release will not activate when the key is in the ignition switch.
*2: Doors lock with the keyfob while the ignition switch is in the ON position. However, the hazard indicator and horn will not function.
*3: Doors lock with the keyfob while any door is open. However, the hazard indicator and horn will not function.

Unlocking doors

1. Push the UNLOCK button on the keyfob once.

- The driver's door and rear hatch/trunk lid unlock.
- The hazard indicator flashes once if all doors are completely closed with the ignition switch in any position except the ON position.
- The interior light turns on and the light timer activates for 30 seconds when the switch is in the DOOR position with the ignition switch in any position except the ON position.

2. Push the UNLOCK button on the keyfob again within 5 seconds.

- Passenger's door unlocks.
- The hazard indicator flashes once if all doors are completely closed.

All doors will be locked automatically unless one of the following operations is performed within 1 minute of pushing the UNLOCK button.

- Any door or rear hatch/trunk lid is opened.
- The ignition switch is turned to the ON position.

The interior light can be turned off without waiting for 30 seconds by turning the ignition switch to the ON position or by locking the doors with the keyfob.

Opening the windows

Push the UNLOCK button on the keyfob and the driver's door will unlock.

Continue to push the UNLOCK button for 3 seconds. All the door windows will start to be lowered. Keep pushing the UNLOCK button until the windows are fully open.

To stop lowering the windows, release the UNLOCK button. To start lowering the windows again, push the UNLOCK button again for 3 more seconds.

Releasing the rear hatch/trunk lid

1. Push the HATCH/TRUNK HOLD button on the keyfob for longer than 0.5 second with the key removed from the ignition switch.
2. The rear hatch (Coupe) or trunk lid (Roadster) opens.

Using the panic alarm

If you are near your vehicle and feel threatened, you may activate the alarm to call attention by pushing and holding the PANIC button on the keyfob for **longer than 0.5 second** (with the key removed from the ignition switch).

The theft warning alarm and headlights will stay on for 30 seconds.

The panic alarm stops when:

- It has run for 30 seconds, or
- The LOCK button or the UNLOCK button is pushed, or
- The PANIC button or the HATCH/TRUNK HOLD button is pushed on the keyfob for longer than 0.5 second.

OPERATION GUIDE

MODE (Push "LOCK" and "UNLOCK" buttons for more than 2 seconds to switch)		Switching indicator	LOCK	UNLOCK
Hazard indicator and horn →	HAZARD INDICATOR ONLY	HAZARD – 3 times	HAZARD – twice	No operation
Hazard indicator only →	HAZARD INDICATOR AND HORN	HAZARD – once HORN – once	HAZARD – twice HORN – once	HAZARD – once

SPA1260

Setting hazard indicator and horn mode

This vehicle is set in hazard indicator and horn mode when you first receive the vehicle.

In hazard indicator and horn mode, when the LOCK button is pushed, the hazard indicator flashes twice and the horn chirps once. When the UNLOCK button is pushed, the hazard indicator flashes once.

If hazard indicator and horn mode is not necessary, you can switch to hazard indicator only mode by following the switching procedure.

In hazard indicator only mode, when the LOCK button is pushed, the hazard indicator flashes twice. When the UNLOCK button is pushed, neither the hazard indicator nor the horn operates.

(Switching procedure)

Push the LOCK and UNLOCK buttons on the keyfob simultaneously for more than 2 seconds to switch from one mode to the other.

When pushing the buttons to set hazard indicator only mode, the hazard indicator flashes 3 times.

When pushing the buttons to set hazard indicator and horn mode, the hazard indicator flashes

once and the horn chirps once.

HOOD

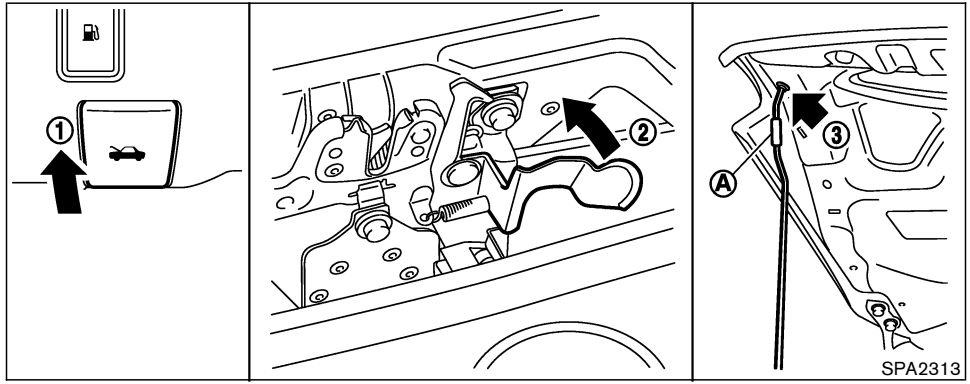

1. Pull the hood lock release handle (1) located below the instrument panel; the hood will then spring up slightly.
2. Raise the lever (2) at the front of the hood with your fingertips and raise the hood.
3. Insert the assist bar into the slot (3) in the front edge of the hood.
4. When closing the hood, reset the assist bar to its original position, then slowly close the hood and make sure it locks into place.

Hold the coated part (A) when removing or resetting the support rod. Avoid direct contact with the metal parts, as they may be hot immediately after the engine has been stopped.

WARNING

- **Make sure the hood is completely closed and latched before driving. Failure to do so could cause the hood to fly open and result in an accident.**
- **If you see steam or smoke coming from the engine compartment, to avoid injury do not open the hood.**

REAR HATCH (Coupe models)

WARNING

Do not drive with the rear hatch open. This could allow dangerous exhaust gases to be drawn into the vehicle. See "Precautions when starting and driving" in the "5. Starting and driving" section for exhaust gas.

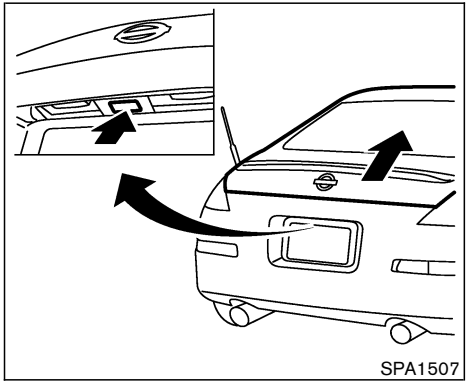

OPENER OPERATION

The rear hatch release switch is located between the license plate lights.

To open the rear hatch, unlock it with one of the following operations then push the release switch:

- Push the UNLOCK button on the keyfob once. (Pushing the HATCH/TRUNK HOLD button on the keyfob can open the rear hatch at once without pushing the release switch.)
- Insert the key into the door key cylinder and turn the door key counterclockwise once.
- Push the power door lock switch to the UNLOCK side.

The rear hatch employs a spring component which enables you to lift up the hatch by one hand. Because of this, sometimes the rear hatch may clatter when the lock is released, but it is not a malfunction.

To close, push the rear hatch down securely.

The rear hatch release switch is linked with the driver side door lock. To open the rear hatch, unlock the driver side door.

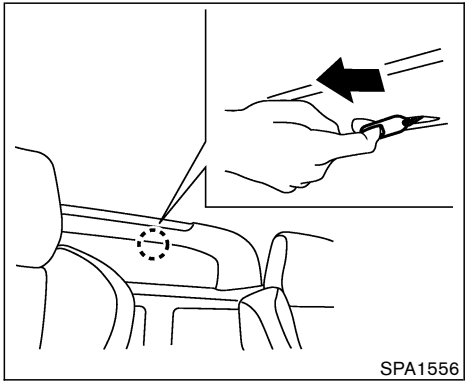

SECONDARY REAR HATCH RELEASE

The secondary rear hatch release mechanism allows opening the rear hatch in the event of discharged battery or emergency.

The release (string) handle is located under the strut tower bar inside the luggage compartment.

To open the rear hatch from the inside, firmly pull the release handle to the direction shown above until the lock releases.

WARNING

- **Do not drive with the trunk lid open. This could allow dangerous exhaust gases to be drawn into the vehicle. See "Precautions when starting and driving" in the "5. Starting and driving" section for exhaust gas.**
- **Closely supervise children when they are around cars to prevent them from playing and becoming locked in the trunk where they could be seriously injured. Keep the car locked, with the trunk closed when not in use, and prevent children's access to car keys.**

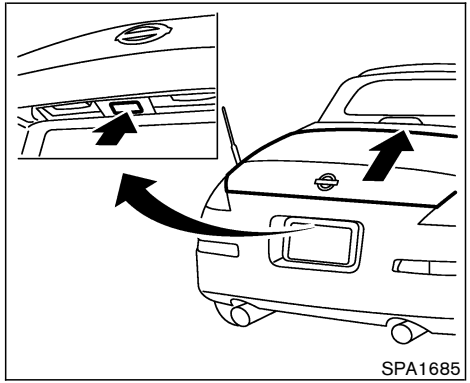

OPENER OPERATION

The trunk lid release switch is located between the license plate lights.

To open the trunk lid, unlock it with one of the following operations then push the release switch:

- Push the UNLOCK button on the keyfob once. (Pushing the HATCH/TRUNK HOLD button on the keyfob can open the trunk lid at once without pushing the release switch.)
- Insert the key into the door key cylinder and turn it counterclockwise once.

- Push the power door lock switch to the UNLOCK side. (After locking the doors with a keyfob, this switch is not available due to the security system.)

To close, push the trunk lid down securely.

The trunk lid release switch is linked with the driver side door lock. To open the trunk lid, unlock the driver side door.

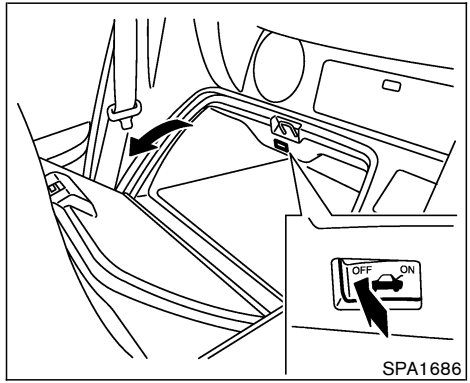

Cancel switch

When the cancel switch (located inside the rear floor box) is OFF, the trunk lid cannot be opened with the release switch. It can be opened only by pushing the HATCH/TRUNK HOLD button on the keyfob.

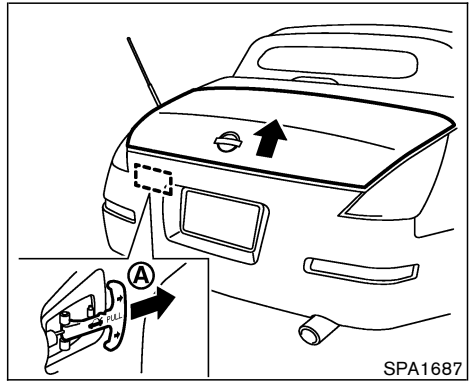

INTERIOR TRUNK LID RELEASE

WARNING

Closely supervise children when they are around cars to prevent them from playing and becoming locked in the trunk where they could be seriously injured. Keep the car locked, with the trunk closed when not in use, and prevent children's access to car keys.

The interior trunk lid release mechanism provides a means of escape for children and adults in the event they become locked inside the trunk.

The handle (A) is located inside the trunk compartment as illustrated.

To open the trunk lid from the inside, pull the release handle towards you until the lock releases and push up on the trunk lid. The release lever is made of a material that glows in the dark after a brief exposure to ambient light.

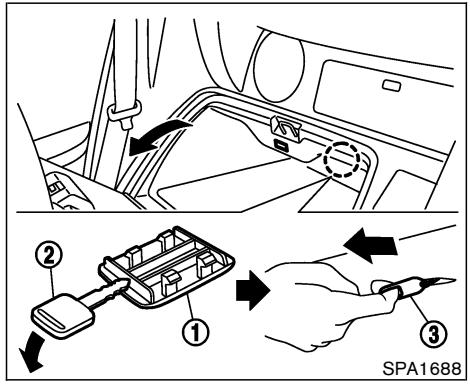

SECONDARY TRUNK LID RELEASE

The secondary trunk lid release mechanism allows opening the trunk lid in the event of discharged battery or emergency.

Remove the cover (1) (located inside of the rear floor box) using a suitable tool (2) as shown. Access the release (string) handle (3).

To open the trunk lid from the inside, firmly pull the release handle to the direction shown above until the lock releases.

SOFT TOP (Roadster models)

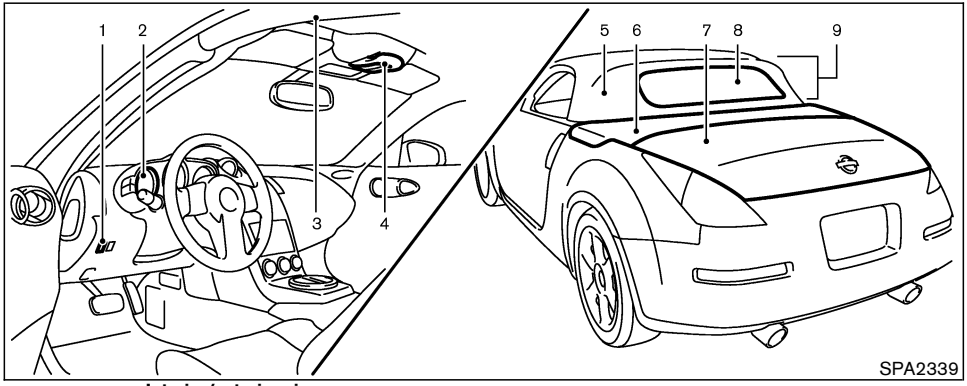

Interior/exterior view

1. Soft top operating switch
2. Soft top indicator light (on the combination meter)
3. Top side rail
4. Top latch lever
5. Soft top
6. Top storage lid
7. Trunk lid
8. Rear window
9. Rear section of the top

BEFORE OPERATING THE TOP

The soft top of your 350Z Roadster is electrically operated. You can fully open or close the top only by pressing the operating switch (on the lower side of the instrument panel).

The soft top operating switch must be operated under all of the following conditions:

- When the foot brake pedal is depressed.
- When the vehicle is stopped.
- When the engine is running.

CAUTION

Always keep the engine running while operating the soft top. The top will also operate when the ignition switch is in the ON position, but run the engine to prevent a discharged battery.

Be sure to follow the operating instructions, and all the warnings and cautions in this section. **Improper operation of the top could cause a system malfunction, damage, or deterioration of the top material and related parts.**

WARNING

- **Park the vehicle in a safe and level place and apply the parking brake.**
- **Make sure the area is clear of obstacles and there is enough clearance over the top (for example, in a garage or a covered area). More than approximately 6.6 ft (2 m) from the ground is required to open or close the top safely. Otherwise, the top may damage any objects above it**

while moving. The top operating system could also be damaged.

- Do not operate the top in a strong wind. It could be blown by the wind, striking someone or damage the top.
- Do not allow anyone to stand up or extend any portion of their body out of the opening while the vehicle is in motion or while the top is being operated.
- In an accident you could be thrown from the vehicle with an open top. Always use seat belts and proper child restraints.

CAUTION

- Do not operate the top when the temperature is below 32°F (0°C). This may result in damage to the top material or operating system.
- Remove water drops, snow, ice or sand from the top, and dry the surface of the top completely before opening it.
- Do not open the top when it is wet or damp. This may cause interior water damage, stains or mildew on the top material.
- Be sure to turn off the rear window defroster switch. Never turn it on while the top is being operated or fully opened. The heat may damage the top material.

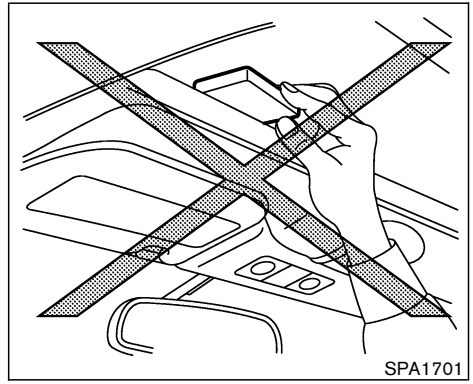

CAUTION

- Do not place any objects between the top cloth and the structure. Doing so could interfere with top operation and cause damage to the top operating system or the objects.
- Do not place anything on the top and the storage lid. Even small items may interfere with the top operation and could cause damage to the top or the

vehicle body.

- **Do not place anything in the top storage area. The top will not fit there properly, and this could damage the top and/or the vehicle body.**
- **Do not sit or place excessive weight on the top and the storage lid, especially when the top is being operated. The top may be damaged.**
- **Do not drive the vehicle with the top partially opened. Always make sure the top is either fully opened or closed before driving.**
- **Secure items so that they cannot be blown from the vehicle while driving with the top open.**
- **When a child restraint is installed in the passenger seat, be sure to turn the seatback tilt cancel switch (located on the passenger seatback) to the CANCEL position, or the child restraint may be damaged.**

Make sure the trunk lid is securely closed before operating the top.

WHEN OPERATING THE TOP

WARNING

Keep hands and other parts of the body away from moving parts such as the top, storage lid and power windows.

CAUTION

Keep all parts of the top linkage clear of obstructions, or the top latch may not be securely locked.

NOTE:

- **In case of low battery or low temperature, the top may temporarily stop moving during the operation. This functions to protect the top control mechanism, and it is not a malfunction.**
- **If the top is opened and closed repeatedly in a short period of time, it may stop moving to protect the top motor. Wait for a few minutes before operating the top again.**

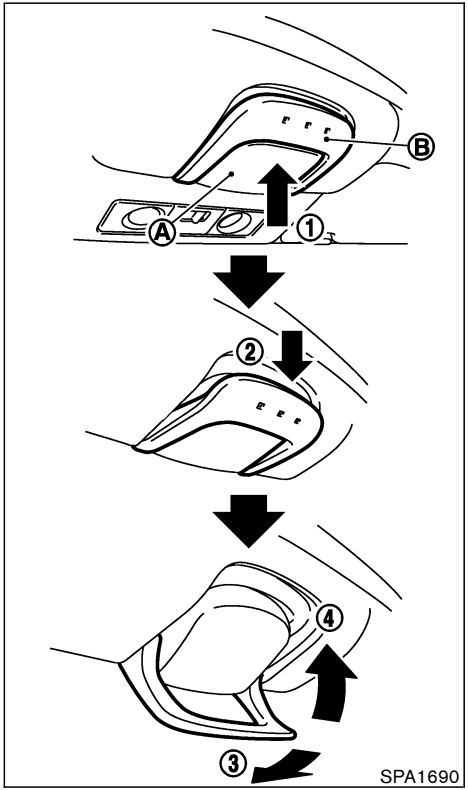

Top latch lever

The soft top has three locking points to engage the front edge of the top to the vehicle body. Operating the top latch lever enables you to lock or unlock all three locking points at the same time.

CAUTION

Before opening the top, be sure to release the top latch. After closing, securely engage the top to the vehicle body.

To release the latch (before opening the top):

1. Push the safety switch Ⓐ .
2. The latch lever Ⓑ is lowered.
3. Swing the lever forward until the latch is released.

To engage the latch (after closing the top):

Check that the top is in the fully closed position.

1. Push the safety switch Ⓐ .
2. The latch lever Ⓑ is lowered.
3. Rotate the lever forward until the front edge of the top is completely joined to the vehicle body.
4. Rotate the lever toward you and push it up into the stored position. Make sure the top is securely engaged to the vehicle body.

   The soft top indicator light will flash with the ignition switch ON when the top is not engaged. See “Soft top indicator light” later in this section.

When releasing or engaging the top latch, you may hear the latch operating. This is normal and not a malfunction.

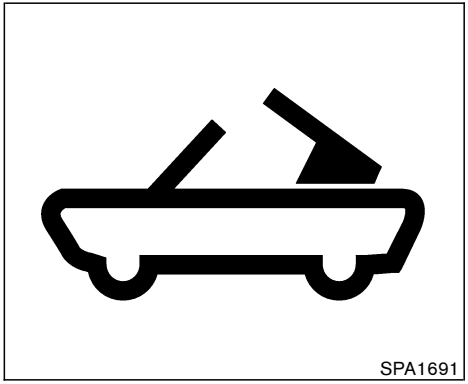

Soft top indicator light

The soft top indicator light in the instrument panel shows the conditions of top operation. The light illuminates when the soft top is being operated or if it is stopped before reaching the fully opened or closed position. When the top is fully opened, the light will turn off. When the top is fully closed, the light will flash.

When the soft top is in motion, and any of the following conditions occur, the top will stop moving:

- The vehicle is moved.
- The ignition switch is turned to OFF.
- The foot brake pedal is released.
- The passenger power seat switch (on the cushion or the seatback) is operated.

Remove your hand from the soft top operating switch, and push the switch again to move the top to the fully opened or closed position. The soft top indicator light will turn off when the top open operation is completely finished. When closing the top, the light, which is illuminated, will begin to flash when the top close operation is completely finished. Securely engage the top to the vehicle body by operating the top latch lever. The light will turn off.

If the soft top indicator light flashes with the ignition switch ON (whether the top is operated or not, and when the top is engaged), it may indicate the top operating system is not functioning properly. Have your vehicle checked by a NISSAN dealer as soon as possible.

Automatic passenger seatback tilt function

The passenger seatback will automatically tilt forward when the soft top is operated. This function is designed to draw your passenger's attention to the rear section of the top, which will come into the passenger compartment from behind during the top operation. The seatback will return to the original position when the entire top operation is completed.

This automatic seatback movement will be stopped:

- When the passenger seat sliding or reclining switch (on the seat cushion) is operated.
- When the power seatback tilt switch (on the seatback) is operated.
- When the seatback tilt cancel switch is turned to the CANCEL position.

Remove your hand from the soft top operating switch, and push it again to resume operation. The passenger seatback will start tilting forward again from the present position, and the soft top will start opening or closing. If the top movement is interrupted at this time, the next time you resume top operation, the seatback will first tilt forward from the present position, then the top will start moving again.

If you need to cancel this function or when a child restraint is installed in the passenger seat, push the seatback tilt cancel switch to the CANCEL position. For the seatback tilt cancel switch, see "Tilting and reclining passenger's seat from driver's seat" in the "1. Safety — Seats, seat belts and supplemental restrain system" section.

If the seatback tilt cancel switch is in the CAN-

CEL position and the passenger seat is occupied, ask the passenger to sit forward when the top is being opened or closed.

Automatic window lowering

When the soft top operating switch is pressed, the power windows will automatically be lowered completely. The windows do not rise automatically after the top operation is completed. Use the power window switches to raise them.

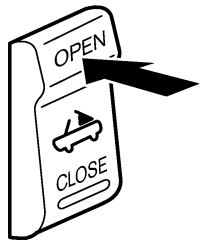

SPA1692

OPENING THE TOP

1. Apply the parking brake and move the selector lever to the P (Park) position (for the automatic transmission model) or the shift lever to the N (Neutral) position (for the manual transmission model).
2. Start the engine.
3. Depress the foot brake pedal.
4. Release the front edge of the top from the vehicle body with the top latch lever.
5. Push OPEN on the soft top operating switch and hold it until the top is fully opened.
   - The soft top indicator light will illuminate while the top is in motion. (In about 20 seconds, the opening movement will finish and the indicator light turns off.)
   - Windows will automatically be fully opened.
   - The passenger seatback will automatically move forward, unless the seatback tilt cancel switch is in the CANCEL position. It will return to the original position after the top operation. (See “Automatic passenger seatback tilt function” shown on the previous page of this section.)
6. Release the switch when the top is fully opened. (The indicator light turns off.)

NOTE:

If you release the switch and press it again while the top is being opened, the top will slightly move to the closing direction, then start moving to the opening direction again. The top is designed to move in this way. It is not a malfunction.

SPA1693

CLOSING THE TOP

1. Apply the parking brake and move the selector lever to the P (Park) position (for the automatic transmission model) or the shift lever to the N (Neutral) position (for the manual transmission model).
2. Start the engine.
3. Depress the foot brake pedal.
4. Push CLOSE on the soft top operating switch and hold it until the top is fully closed.
   - The soft top indicator light will illuminate while the top is in motion. (In about 20 seconds, the closing movement will finish.)
   - Windows will automatically be fully opened.
   - The passenger seatback will automatically move forward, unless the seatback tilt cancel switch is in the CANCEL position. It will return to the original position after the top operation. (See “Automatic passenger seatback tilt function” shown on the previous page of this section.)
5. Release the switch when the top is fully closed. (The indicator light, which is illuminated, will begin to flash.)
6. Securely engage the front edge of the top to the vehicle body with the top latch lever. (The indicator light turns off.)

IF THE TOP DOES NOT OPEN OR CLOSE ELECTRICALLY

If you cannot operate the soft top with the operating switch, first check whether all the following operating conditions are completed:

- foot brake pedal is depressed
- vehicle is stopped
- ignition switch is ON (Run the engine when operating the top.)

If the top still does not move under the above conditions or has any system malfunction, see a NISSAN dealer as soon as possible. When you must close the top by yourself, in the event of emergency or when an immediate dealer service is not available, close the top manually according to the procedures shown in this section.

When closing the soft top manually:

- Move the vehicle to a safe place, away from traffic.
- Two people should perform this procedure, as some of the top parts are extremely heavy.

The top cannot be opened manually.

WARNING

- **Do not drive with the top partially opened.**
- **If the top cannot be operated properly, see a NISSAN dealer as soon as possible to have your vehicle checked.**

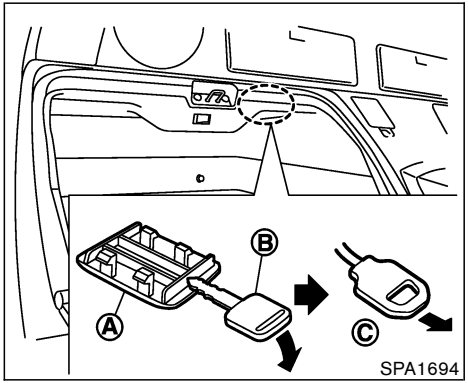

1. Open the trunk lid. In the event of discharged battery, you need to open the trunk lid as follows:

a. Open the rear floor box behind the passenger seat.

b. Remove the cap Ⓐ using a suitable tool Ⓑ.

c. Pull the string handle (secondary trunk lid release) Ⓒ until the trunk lid lock is released.

d. Lift up the trunk lid.

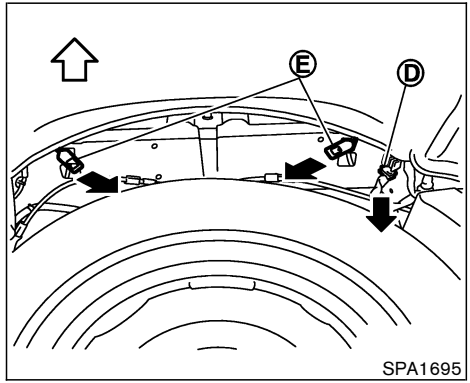

2. Open the top storage lid

a. Remove floorboard inside of the trunk.

b. Remove the harness connector Ⓓ of the storage lid motor installed on the back right side of the trunk by pulling in a downward direction.

c. Pull down the lock release cable (right and left) Ⓔ.

d. Listen for a clicking sound of the lock releasing.

e. Pull up the storage lid from the left and right side of vehicle by hand.

CAUTION

The storage lid is extremely heavy. Pulling it up should be done by two people.

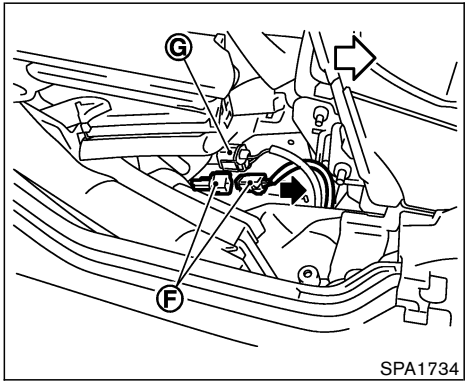

Right side

3. Close the soft top.

a. Remove the harness connectors of the top motor, Ⓕ (right side of the vehicle) and Ⓗ (left side).

CAUTION

Two harness connectors are installed on the right side and three on the left side as shown. Only the harness connectors Ⓕ and Ⓗ should be removed. (Do not remove the other harness connectors Ⓖ, Ⓘ and Ⓙ.)

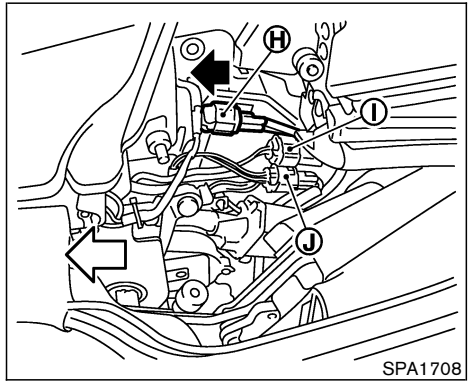

Left side

b. A person on each side of the vehicle should slowly pull the top to the closed position.

c. Latch the front edge of the top to the vehicle body with the top latch lever.

4. Push the storage lid down to the vehicle body panel and close it. (Listen for locking sounds from both right and left sides of the lid.)

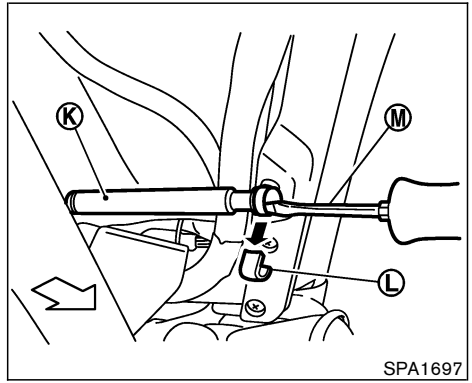

5. Lower the rear section of the top.

a. Remove the shock absorber Ⓚ which supports the rear section of the top from the vehicle body. (Both the left and right side must be removed — the figure above shows the left side.) To remove the shock absorber, remove the holder Ⓛ on the terminal part using a flat-bladed screwdriver Ⓜ.

CAUTION

When the shock absorber is removed, the rear section of the top loses support

and falls simultaneously. Support the top by hand so it does not strike the body.

b. Lower the rear part of the top and push it onto the top storage lid. The top is locked to the storage lid, but the bottom of the rear part is not closed tightly.

CAUTION

- **After closing the top manually, have the system checked and/or repaired by a NISSAN dealer as soon as possible.**
- **Avoid leaving the vehicle outside for long periods or driving at high speeds. The rear of the top is not locked completely, and this may allow wind and rain to get into your vehicle.**

CARE OF THE SOFT TOP AND THE VEHICLE BODY

To use your Roadster safely and comfortably, you need to observe all the warnings and cautions shown in the previous pages. Also, to maintain a good appearance of the soft top and the vehicle body, you need to care for them by cleaning and/or washing properly.

CAUTION

- **Do not use an automatic car wash or a high-pressure car wash to clean your vehicle. The top may be damaged and water may leak into the inside of the vehicle.**
- **Store the vehicle with the top closed if it is not to be used for long periods. Keeping the top stowed for long periods may cause wrinkles on the surface of the top.**

See “Cleaning exterior” in the “7. Appearance and care” section for detailed instructions.

- A protective clear tape is applied to the top storage lid painted surface where the soft top contacts the surface. When the top is fully closed, the tape may transmit some light, visible from the inside of the vehicle. This does not affect the water and air tightness of the seal.
- The inner surface of the trunk and top storage lids may show a fibrous, or marbled pattern. This is the normal appearance of the material used in these parts.

FUEL-FILLER DOOR

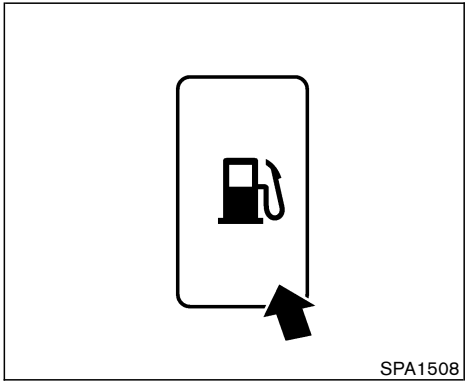

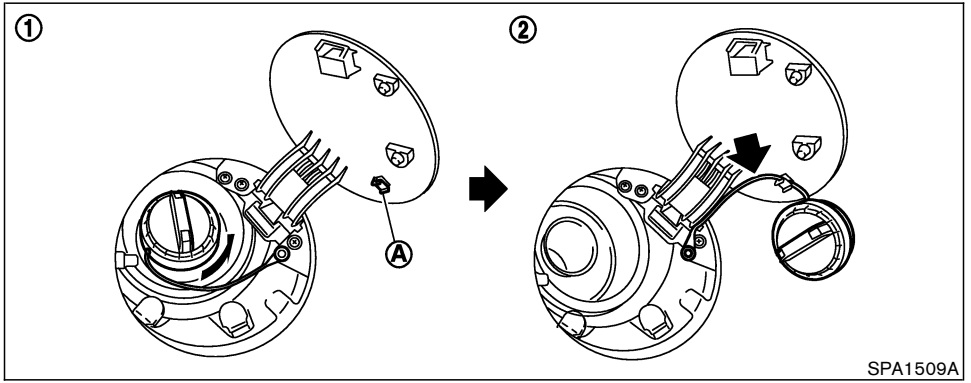

OPENER OPERATION

To open the fuel-filler door, push the opener switch located below the instrument panel. To lock, close the fuel-filler door securely.

FUEL-FILLER CAP

1. To remove the fuel-filler cap, turn it counter-clockwise.
2. Hang the string of the cap on the hook (A) as shown while refueling.

The fuel-filler cap is a ratcheting type. Tighten the cap clockwise until ratcheting clicks are heard.

WARNING

- **Gasoline is extremely flammable and highly explosive under certain conditions. You could be burned or seriously injured if it is misused or mishandled. Always stop the engine and do not smoke or allow open flames or sparks near the vehicle when refueling.**
- **Fuel may be under pressure. Turn the cap a third of a turn, and wait for any "hissing" sound to stop to prevent fuel from spraying out and possibly causing personal injury. Then remove**

the cap.

- Do not attempt to top off the fuel tank after the fuel pump nozzle shuts off automatically. Continued refueling may cause fuel overflow, resulting in fuel spray and possibly a fire.
- Use only an original equipment type fuel-filler cap as a replacement. It has a built-in safety valve needed for proper operation of the fuel system and emission control system. An incorrect cap can result in a serious malfunction and possible injury. It could also cause the malfunction indicator light to come on.
- Do not fill a portable fuel container in the vehicle or trailer. Static electricity can cause an explosion of flammable liquid, vapor or gas in any vehicle or trailer. To reduce the risk of serious injury or death when filling portable fuel containers:
  - Always place the container on the ground when filling.
  - Do not use electronic devices when filling.
  - Keep the pump nozzle in contact with the container while you are filling it.
  - Use only approved portable fuel containers for flammable liquid.
- Never pour fuel into the throttle body to attempt to start your vehicle.

CAUTION

- If fuel is spilled on the vehicle body, flush it away with water to avoid paint damage.
- Tighten until the fuel-filler cap clicks. Failure to tighten the fuel-filler cap properly may cause the SERVICE ENGINE SOON malfunction indicator light (MIL) to illuminate. If the SERVICE ENGINE SOON light illuminates because the fuel-filler cap is loose or missing, tighten or install the cap and continue to drive the vehicle. The SERVICE ENGINE SOON light should turn off after a few driving trips. If the SERVICE ENGINE SOON light does not turn off after a few driving trips, have the vehicle inspected by a NISSAN dealer.
- For additional information, see the “Malfunction Indicator Light (MIL)” in the “2. Instruments and controls” section.

STEERING WHEEL

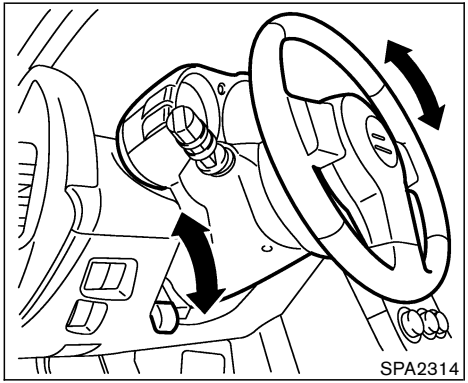

TILT OPERATION

Push the lock lever down and adjust the steering wheel up or down to the desired position.

Push the lock lever up securely to lock the steering wheel in place.

WARNING

Do not adjust the steering wheel while driving. You could lose control of your vehicle and cause an accident.

SUN VISORS

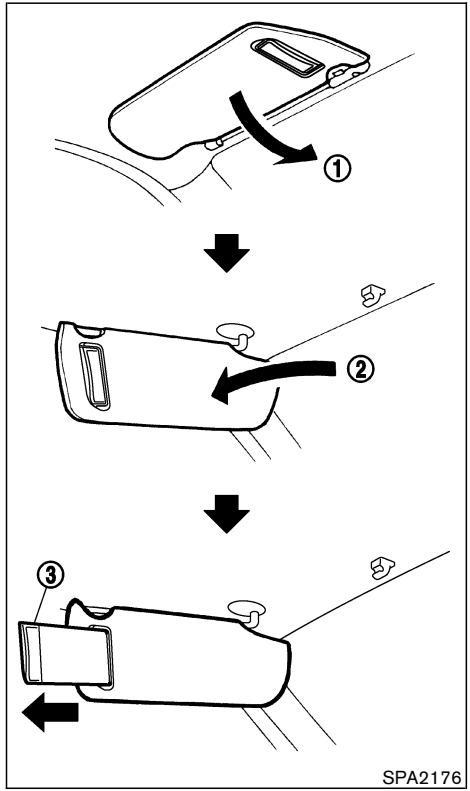

1. To block out glare from the front, swing down the main sun visor (1).
2. To block glare from the side, remove the main sun visor from the center mount and swing it to the side (2).
3. To use the extension sun visor (3) (if so equipped), pull it out from the main sun visor as shown.

CAUTION

Do not store the main sun visor before storing the extension sun visor.

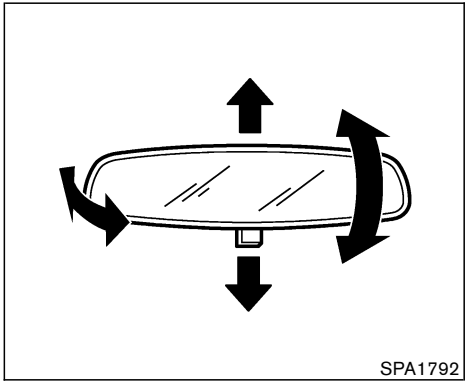
SPA1792

INSIDE MIRROR

Adjust the height and the angle of the inside mirror to the desired position.

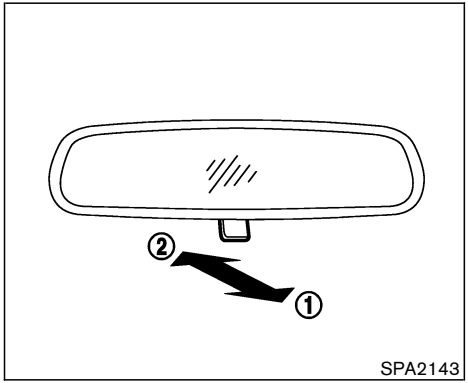

SPA2143

The night position (1) will reduce glare from the headlights of vehicles behind you at night.

Use the day position (2) when driving in daylight hours.

WARNING

Use the night position only when necessary, because it reduces rear view clarity.

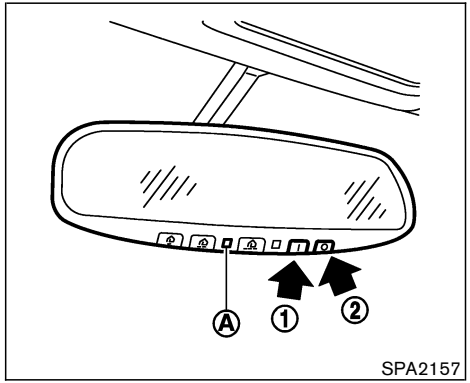

SPA2157

AUTOMATIC ANTI-GLARE INSIDE MIRROR (if so equipped)

The inside mirror is designed so that it automatically changes reflection according to the intensity of the headlight of the following vehicle.

When the inside mirror is in the “I” (AUTO) position (1), excessive glare from the headlights of the vehicle behind you will be reduced. The AUTO indicator light (A) (green) will be on. When the switch of the inside mirror is in the “◯” (OFF) position (2), the inside mirror will operate normally.

For HomeLink® Universal Transceiver, see the

description in the “2. Instruments and controls” section.

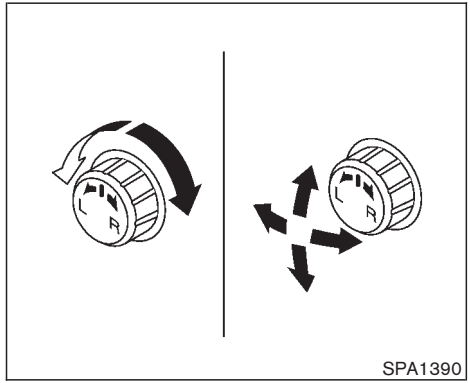

SPA1390

OUTSIDE MIRRORS

WARNING

Objects viewed in the outside mirror on the passenger side are closer than they appear. Be careful when moving to the right. Using only this mirror could cause an accident. Use the inside mirror or glance over your shoulder to properly judge distances to other objects.

The outside mirror will operate only when the ignition switch is in the ACC or ON position.

Turn the control knob (located on the driver side door armrest) to right or left to select the right or left outside mirror, then adjust using the knob.

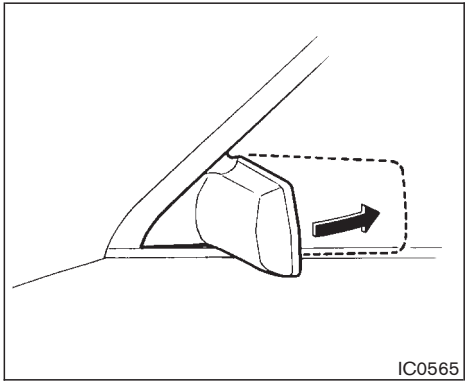

Foldable outside mirrors

Fold the outside mirror by pushing it toward the rear of the vehicle.

4 Display screen, heater, air conditioner and audio systems

Safety note 4-2
Control panel buttons — with navigation system 4-2
Names of the components 4-2
How to use joystick and “ENTER” button 4-3
How to use “BACK” button 4-3
Setting up the start-up screen 4-3
How to use “INFO” button 4-3
How to use “SETTING” button 4-5
How to use the “☀/☽” button 4-8
Ventilators 4-8
Center ventilators 4-8
Side ventilators 4-8
Heater and air conditioner (Automatic) 4-9
Automatic operation 4-10
Manual operation 4-10
Operating tips 4-11
Servicing air conditioner 4-12
Audio system 4-12
Radio 4-12
FM radio reception 4-13
AM radio reception 4-13
Satellite (SAT) radio reception (if so equipped) 4-13
Audio operation precautions 4-14
FM-AM radio with compact disc (CD) player 4-19
FM-AM-SAT radio with compact disc (CD) changer 4-23
CD care and cleaning 4-29
Steering wheel switch for audio control (if so equipped) 4-29
Antenna 4-30
Car phone or CB radio 4-31
Bluetooth® Hands-Free Phone System with NISSAN voice recognition (if so equipped) 4-31
Using the system 4-33
Control buttons 4-35
Getting started 4-35
List of voice commands 4-37
Speaker adaptation (SA) mode 4-42
Troubleshooting guide 4-45

SAFETY NOTE

WARNING

- **Do not disassemble or modify this system. If you do, it may result in accidents, fire, or electric shock.**
- **Do not use this system if you notice any abnormality, such as a frozen screen or lack of sound. Continued use of the system may result in accident, fire or electric shock.**
- **In case you notice any foreign object in the system hardware, spill liquid on it, or notice smoke or smell coming from it, stop using the system immediately and contact a NISSAN dealer. Ignoring such conditions may lead to accidents, fire, or electric shock.**

CONTROL PANEL BUTTONS — WITH NAVIGATION SYSTEM

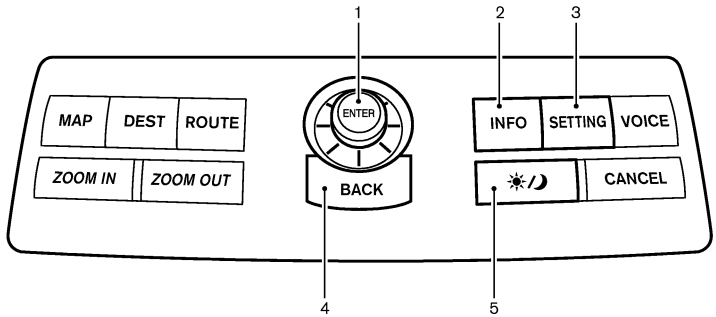

SAA1289

When you use this system, make sure the engine is running.

If you use the system with the engine not running (ignition ON or ACC) for a long time, it will use up all the battery power, and the engine will not start.

Reference symbols:

"ENTER" button

This is a button on the control panel.

"Display" key

This is a select key on the screen. By selecting this key you can proceed to the next function.

NAMES OF THE COMPONENTS

1. JOYSTICK and "ENTER" button
2. "INFO" button
3. "SETTING" button
4. "BACK" button
5. "☀/☽" brightness control button

For Navigation System control buttons (other than above), refer to the separate Navigation System Owner's Manual.

HOW TO USE JOYSTICK AND “ENTER” BUTTON

Choose an item on the display using the joystick and push the ENTER button for operation.

HOW TO USE “BACK” BUTTON

This button has two functions.

To return to the previous screen:

When this button is pushed during setup, setup will be canceled, and the screen will return to the previous screen.

To finish the set-up:

When this button is pushed after setup is completed, the settings will be renewed as directed, and the screen will return to the map.

INFO:

When the “BACK” button must be pushed, (for example, after the setup is finished) instructions are given in the operation procedure of each section in this manual. If the “BACK” button is pushed when not finished with the setup, the setting will be canceled, and the screen will return to the previous screen.

SETTING UP THE START-UP SCREEN

When you turn the ignition key to the ACC position, the SYSTEM START-UP warning is displayed on the screen. Read the warning and select the “**OK**” key then push the “ENTER” button.

If you do not push the ENTER button, this system will not proceed to the next step display.

To proceed to the next step, refer to the separate Navigation System Owner’s Manual.

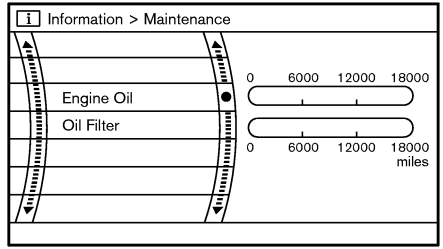

SAA1290

HOW TO USE “INFO” BUTTON

When the “INFO” button is pushed, the “**Maintenance**” screen will be displayed.

Maintenance information

To set the maintenance interval for the Engine Oil or Oil Filter, choose an item using the joystick and push the “ENTER” button.

You can also set to display a message to remind you that the maintenance needs to be performed.

The following example shows how to set the engine oil change interval. Use the same steps

to set the other maintenance information.

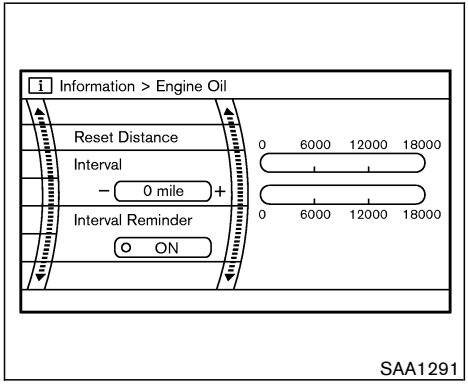

1. Reset the driving distance to the new maintenance schedule.
2. Set the interval (mileage) of the maintenance schedule. To determine the recommended maintenance interval, refer to your “NISSAN Service and Maintenance Guide”.
3. To display the MAINTENANCE INFORMATION automatically when the set trip distance is reached, highlight the “**Interval Reminder**” key with the joystick and push the “ENTER” button.
4. To return the display to the “**Maintenance**” screen, push the “BACK” button.

“**Maintenance**” display cannot be operated when the vehicle is moving. Stop the vehicle in a safe place to see the information.

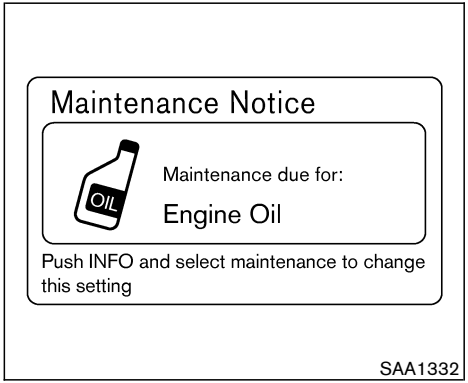

Maintenance notice

The "**Maintenance Notice**" screen ("ENGINE OIL" or "OIL FILTER") will be automatically displayed as shown when both of the following conditions are met:

- the vehicle is driven the set distance and the ignition switch is turned OFF.
- the ignition switch is turned ON the next time the vehicle will be driven.

To return to the previous display after the "**Maintenance Notice**" screen is displayed, push the "BACK" button.

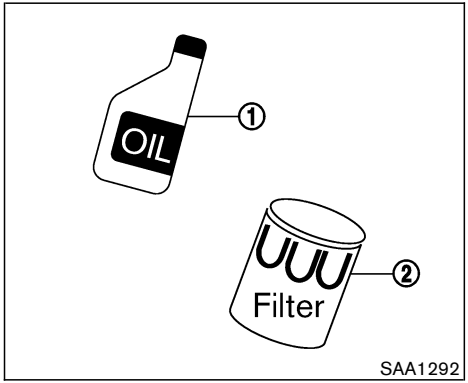

Engine Oil ①/Oil Filter ②

The "**Maintenance Notice**" screen displays each time the ignition switch is turned ON until one of the following conditions are met:

- "**Reset Distance**" is selected.
- "**Interval Reminder**" is set OFF.
- the maintenance interval is set again.

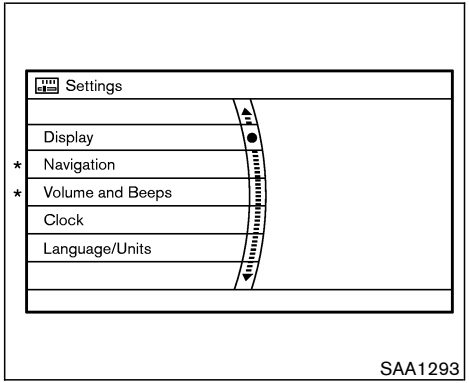

*: Refer to the separate Navigation System Owner's Manual.

HOW TO USE "SETTING" BUTTON

The "**Settings**" screen will appear when the "SETTING" button is pushed.

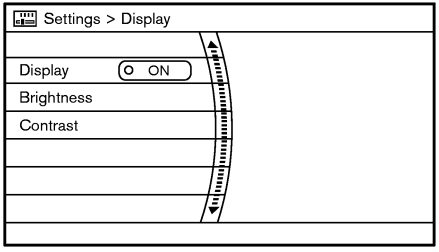

SAA1540

Display settings

The following menu will appear when pushing the “SETTING” button, selecting “**Display**” key and pushing the “ENTER” button.

Display:

To turn off the screen, select the “**Display**” key and push the “ENTER” button to turn off the “**ON**” indicator. When any mode button is pushed with the screen off, the screen turns on for further operation. The screen will turn off automatically 5 seconds after the operation is finished on the map display.

To turn on the screen, select the “**Display**” key and turn on the “**ON**” indicator.

Brightness/Contrast:

To adjust the brightness and contrast of the screen, select the “**Brightness**” or “**Contrast**” key and push the “ENTER” button. Then you can adjust the brightness to darker or brighter and the contrast to lower or higher using the joystick.

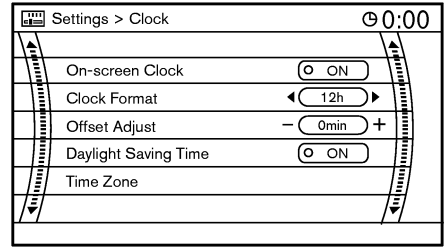

SAA1091

Clock settings

The following display will appear when pushing the “SETTING” button, selecting the “**Clock**” key and pushing the “ENTER” button.

On-screen Clock:

When this item is turned to ON, a clock is always displayed in the upper right corner of the screen.

This clock will indicate the time almost exactly because it is always adjusted by the GPS system.

Clock Format:

Choose either the 12-hour clock display or the 24-hour clock display.

Offset Adjust:

Adjust the time by increasing or decreasing per minute.

Daylight Saving Time:

Turn this item to ON for daylight saving time application.

Time Zone:

Choose the time zone from the following

- Pacific
- Mountain
- Central
- Eastern
- Atlantic
- Newfoundland

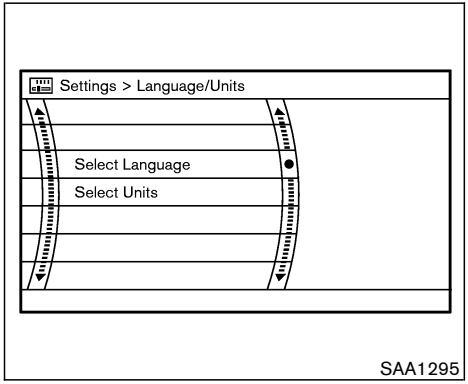

Language/Units settings

The Language/Units settings screen will appear when selecting the "**Language/Units**" key and pushing the "ENTER" button.

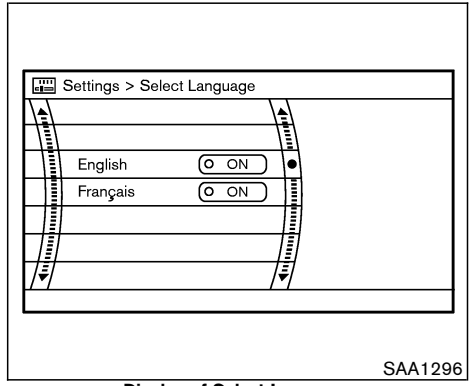

Display of Select Language

Select the "**Select Language**" or "**Select Units**" key and push the "ENTER" button.

Language: "English" or "Français"

Unit: "US" — Mile, °F, MPG
"Metric" — km, °C, L/100 km

Select the "**ON**" key of the desired language or units and push the "ENTER" button.

HOW TO USE THE "☀/☽" BUTTON

Push the "☀/☽" (DAY/NIGHT) button to switch the display brightness to the daytime or night-time mode, and adjust the brightness by moving the joystick right or left.

If no operation is done within 10 seconds, or if the "BACK" button is pushed, the display will return to the previous display.

Push the "☀/☽" button for more than 2 seconds to turn the display off. Push the button again for more than 2 seconds to turn the display on.

VENTILATORS

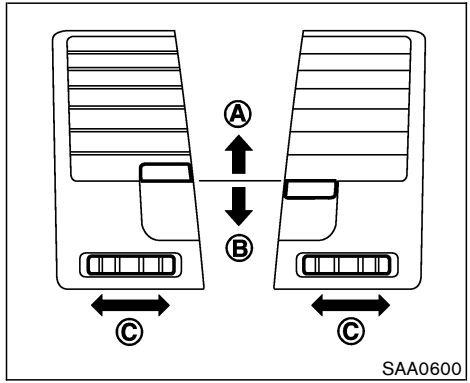

CENTER VENTILATORS

Adjust the air flow direction of ventilators.

Moving the lever up or down will open (A) or close (B) the vents.

To change the air flow direction, turn the dial (C).

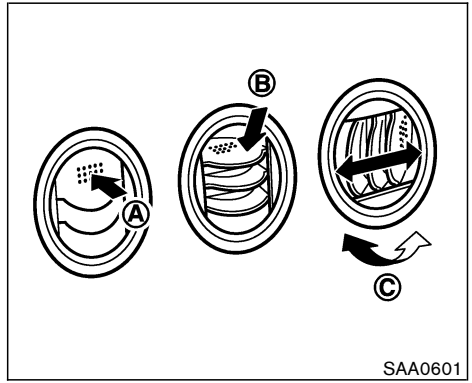

SIDE VENTILATORS

Adjust the air flow direction of ventilators by (A) opening, (B) closing or (C) rotating as illustrated.

HEATER AND AIR CONDITIONER (Automatic)

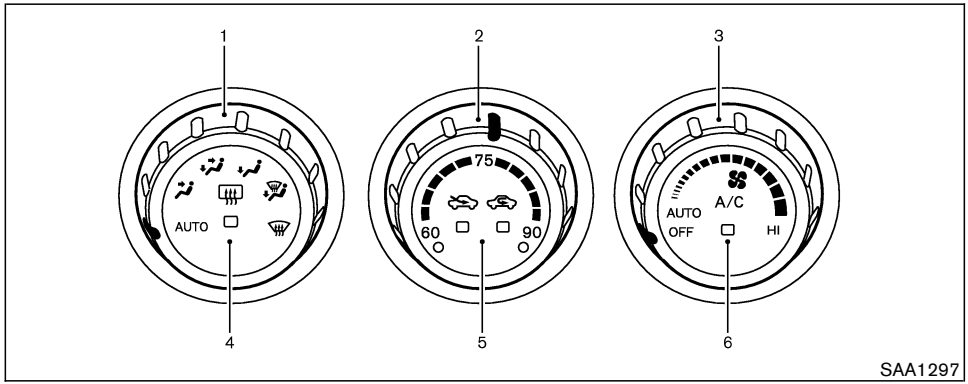

1. Air flow control dial
2. Temperature control dial*

* The display of degrees:
"60-75-90" is used for °F (US).
"18-25-32" is used for °C (Canada).

3. Fan speed control dial
4. Rear window defroster button
   (See the "2. Instruments and controls" section.)
5. Air intake button
   (Air recirculation and Fresh air)
6. A/C (air conditioner) button

WARNING

- **The air conditioner cooling function operates only when the engine is running.**
- **On hot, sunny days, temperatures in a closed vehicle could quickly become high enough to cause severe or possibly fatal injuries to people or animals. Do not leave children or adults who would normally require the assistance of others in your vehicle. Unattended pets should also not be left alone.**
- **Do not use the recirculation mode for long periods as it may cause the interior air to become stale and the windows to fog up.**

Start the engine and operate the controls to activate the air conditioner.

NOTE:

In your vehicle, the air conditioner system is designed to automatically activate the cooling function when operating the air flow control dial, the fan speed control dial or the air intake button. (The indicator light on the A/C button will illuminate.) Push the A/C button off when the cooling function is not necessary.

AUTOMATIC OPERATION

Cooling and/or dehumidified heating (AUTO)

This mode may be normally used all year round as the system automatically works to keep a constant temperature. Air flow distribution and fan speed are also controlled automatically.

1. Turn the fan speed control dial and air flow control dial to the AUTO position. The air conditioner will automatically turn on. (The A/C button indicator light illuminates.)
2. Turn the temperature control dial to set the desired temperature.

- Adjust the temperature to about 75°F (24°C) for normal operation.
- The temperature of the passenger compartment will be maintained automatically. Air flow distribution and fan speed are also controlled automatically.

A visible mist may be seen coming from the ventilators in hot, humid conditions as the air is cooled rapidly. This does not indicate a malfunction.

Heating (AUTO; A/C off)

The air conditioner does not activate. When you need to heat only, use this mode.

1. Turn the fan speed control dial and air flow control dial to the AUTO position. (The air conditioner will turn on.)
2. Push the A/C button to turn off the air conditioner. (The A/C button indicator light will turn off.)
3. Turn the temperature control dial to set the desired temperature.

- The temperature of the passenger compartment will be maintained automatically. Air flow distribution and fan speed are also controlled automatically.
- Do not set the temperature lower than the outside air temperature. Otherwise the system may not work properly.
- Not recommended if windows fog up.

Dehumidified defrosting or defogging

1. Turn the fan speed control dial to the desired position.
2. Turn the air flow control dial to the DEF position.
3. Turn the temperature control dial to set the desired temperature.

- To quickly remove ice from the outside of the windows, turn the fan speed control dial to the maximum position.
- As soon as possible after the windshield is clean, turn the air flow control dial to the AUTO position to return to the auto mode.
- When the air flow control dial is turned to the or position, the air conditioner will automatically be turned on at outside temperatures above 23°F (−5°C) to defog the windshield, and the air recirculation mode will automatically be turned off.

  Outside air is drawn into the passenger compartment to improve the defogging performance.

MANUAL OPERATION

Fan speed control

Turn the fan speed control dial to manually control the fan speed.

Turn the dial to the AUTO position to return to automatic control of the fan speed.

Air recirculation/Fresh air

Each time the air intake button is pushed, the indicator light on the button will alternate (Air recirculation) and (Fresh air).

When the indicator light is on, the interior

air is recirculated. (When the air recirculation mode is selected with the A/C indicator off while the fan speed control dial is in the AUTO position, the air conditioner will turn on.)

When the indicator light is on, the outside air is drawn into the passenger compartment.

- When the air intake button is pushed for longer than 1.5 seconds, both indicator lights (and) will flash twice, and then the intake air will be controlled automatically. During this AUTO mode, the indicator light of the currently selected mode illuminates.
- When the air flow control dial is in the or position, the air recirculation mode does not activate.

Air flow control

Turning the air flow control dial selects the air outlet to:

: Air flows from center and side ventilators.

: Air flows from center and side ventilators and foot outlets.

: Air flows mainly from foot outlets.

: Air flows from defroster and foot outlets.

: Air flows mainly from defroster outlets.

To turn the system off

Turn the fan speed control dial to the OFF position.

OPERATING TIPS

When the engine coolant temperature and outside air temperature are low, the air flow from the foot outlets may not operate for a maximum of 150 seconds. However, this is not a malfunction. After the coolant temperature warms up, the air flow from the foot outlets will operate normally.

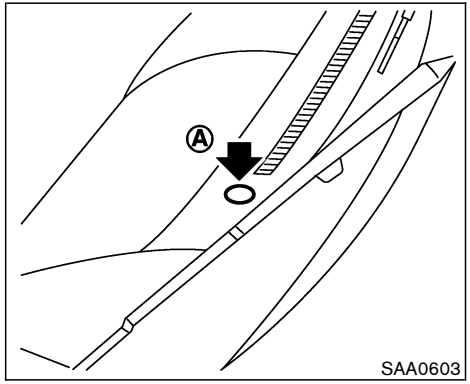

Sensor (A) on the instrument panel helps maintain a constant temperature; do not put anything on or around this sensor.

SERVICING AIR CONDITIONER

The air conditioning system in your NISSAN vehicle is charged with a refrigerant designed with the environment in mind. **This refrigerant will not harm the earth's ozone layer.** However, special charging equipment and lubricant are required when servicing your NISSAN air conditioner. Using improper refrigerants or lubricants will cause severe damage to your air conditioning system. See "Capacities and recommended fuel/lubricants" in the "9. Technical and consumer information" section for air conditioning system refrigerant and lubricant recommendations.

A NISSAN dealer will be able to service your environmentally friendly air conditioning system.

WARNING

The air conditioner system contains refrigerant under high pressure. To avoid personal injury, any air conditioner service should be done only by an experienced technician with proper equipment.

AUDIO SYSTEM

RADIO

Turn the ignition key to ACC or ON and press the POWER, FM or AM button to turn on the radio. If you listen to the radio with the engine not running, the key should be turned to the ACC position.

Radio reception is affected by station signal strength, distance from radio transmitter, buildings, bridges, mountains and other external influences. Intermittent changes in reception quality normally are caused by these external influences.

Using a cellular phone in or near the vehicle may influence radio reception quality.

Radio reception

Your radio system is equipped with state-of-the-art electronic circuits to enhance radio reception. These circuits are designed to extend reception range, and to enhance the quality of that reception.

However there are some general characteristics of FM, AM and SAT (satellite — if so equipped) radio signals that can affect radio reception quality in a moving vehicle, even when the finest equipment is used. These characteristics are completely normal in a given reception area, and do not indicate any malfunction in your radio system.

Remember that a moving vehicle is not the ideal place to listen to a radio. Because of the movement, reception conditions will constantly change. Buildings, terrain, signal distance and interference from other vehicles can work against ideal reception. Described below are some of the factors that can affect your radio reception.

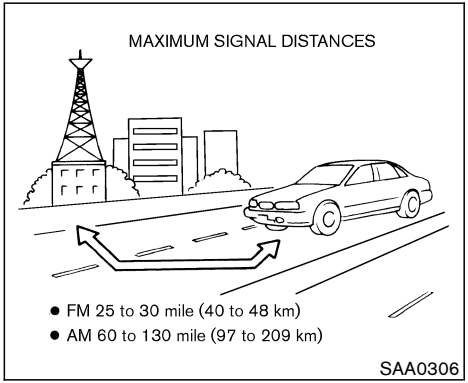

FM RADIO RECEPTION

Range: FM range is normally limited to 25 to 30 miles (40 to 48 km), with monaural (single channel) FM having slightly more range than stereo FM. External influences may sometimes interfere with FM station reception even if the FM station is within 25 miles (40 km). The strength of the FM signal is directly related to the distance between the transmitter and receiver. FM signals follow a line-of-sight path, exhibiting many of the same characteristics as light. For example they will reflect off objects.

Fade and drift: As your vehicle moves away from a station transmitter, the signals will tend to fade and/or drift.

Static and flutter: During signal interference from buildings, large hills or due to antenna position, usually in conjunction with increased distance from the station transmitter, static or flutter can be heard. This can be reduced by adjusting the treble control counterclockwise to reduce treble response.

Multipath reception: Because of the reflective characteristics of FM signals, direct and reflected signals reach the receiver at the same time. The signals may cancel each other, resulting in momentary flutter or loss of sound.

AM RADIO RECEPTION

AM signals, because of their low frequency, can bend around objects and skip along the ground. In addition, the signals can be bounced off the ionosphere and bent back to earth. Because of these characteristics. AM signals are also subject to interference as they travel from transmitter to receiver.

Fading: Occurs while the vehicle is passing through freeway underpasses or in areas with many tall buildings. It can also occur for several seconds during ionospheric turbulence even in areas where no obstacles exist.

Static: Caused by thunderstorms, electrical power lines, electric signs and even traffic lights.

SATELLITE (SAT) RADIO RECEPTION (if so equipped)

When the satellite radio is first installed or the battery has been replaced, the satellite radio may not work properly. This is not a malfunction. Wait more than 10 minutes with the satellite radio ON for the satellite radio to receive all of the necessary data.

No satellite radio reception is available when the SAT band option is selected unless optional satellite receiver and antenna are installed, and an XM® or SIRIUS™ satellite radio service subscription is active.

Satellite radio performance may be affected if cargo carried on the roof blocks the satellite radio signal.

If possible, do not put cargo over the satellite antenna.

Satellite radio is not available in Alaska and Hawaii.

AUDIO OPERATION PRECAUTIONS

Compact Disc (CD) player

CAUTION

- **Do not force a compact disc into the CD insert slot. This could damage the CD and/or CD changer/player.**
- **Trying to load a CD with the CD door closed could damage the CD and/or CD changer.**

- **During cold weather or rainy days, the player may malfunction due to the humidity. If this occurs, remove the CD and dehumidify or ventilate the player completely.**
- **The player may skip while driving on rough roads.**
- **The CD player sometimes cannot function when the passenger compartment temperature is extremely high. Decrease the temperature before use.**

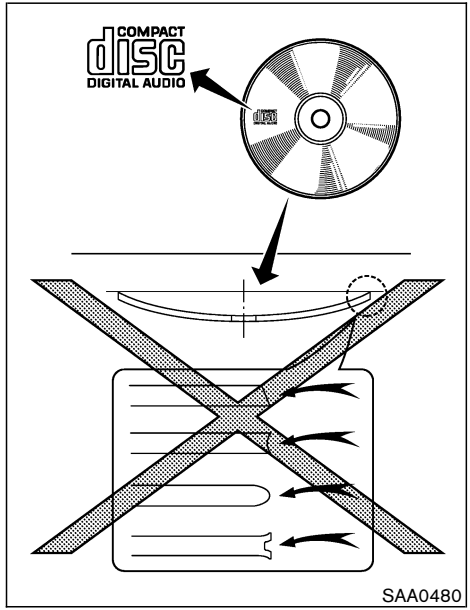

- **Only use high quality 4.7 in (12 cm) round discs that have the "COMPACT disc DIGITAL AUDIO" logo on the disc or packaging.**
- **Do not expose the CD to direct sunlight.**
- **CDs that are of poor quality, dirty, scratched, covered with fingerprints, or that have pin holes may not work properly.**
- **The following CDs may not work properly:**
  - **Copy control compact discs (CCCD)**
  - **Recordable compact discs (CD-R)**
  - **Rewritable compact discs (CD-RW)**
- **Do not use the following CDs as they may cause the CD player to malfunction.**
  - **3.1 in (8 cm) discs**
  - **CDs that are not round**
  - **CDs with a paper label**
  - **CDs that are warped, scratched, or have abnormal edges**
- **This audio system can only play prerecorded CDs. CDs with MP3 or WMA format cannot be written in this audio system.**
- **If the CD cannot be played, one of the following messages will be displayed.**

CHECK DISC:

- **Confirm that the CD is inserted correctly (the label side is facing up, etc.).**
- **Confirm that the CD is not bent or warped and it is free of scratches.**

PUSH EJECT:

This is a malfunction due to excessive temperature inside the player. Remove the CD by pushing the EJECT button. After a short time, reinsert the CD. The CD can be played when the temperature of the player returns to normal.

UNPLAYABLE:

The file is unplayable in this audio system (only MP3 or WMA CD in the audio system with a CD changer).

Compact Disc (CD) with MP3 or WMA (for the audio system with a 6CD changer)

Explanation of terms:

- MP3 — MP3 is short for Moving Pictures Experts Group Audio Layer 3. MP3 is the most well-known compressed digital audio file format. This format allows for near "CD quality" sound, but at a fraction of the size of normal audio files. MP3 conversion of an audio track from CD-ROM can reduce the file size by approximately 10:1 ratio (Sampling: 44.1 kHz, Bit rate: 128 kbps) with virtually no perceptible loss in quality. MP3 compression removes the redundant and irrelevant parts of a sound signal that the human ear doesn't hear.
- WMA — Windows Media Audio (WMA) is a compressed audio format created by Microsoft as an alternative to MP3. The WMA codec offers greater file compression than the MP3 codec, enabling storage of more digital audio tracks in the same amount of space when compared to MP3s at the same level of quality.
- Bit rate — Bit rate denotes the number of bits per second used by a digital music file. The size and quality of a compressed digital audio file is determined by the bit rate used when encoding the file.
- Sampling frequency — Sampling frequency is the rate at which the samples of a signal are converted from analog to digital (A/D conversion) per second.
- Multisession — Multisession is one of the methods for writing data to media. Writing data once to the media is called a single session, and writing more than once is called a multisession.
- ID3/WMA Tag — The ID3/WMA tag is the part of the encoded MP3 or WMA file that contains information about the digital music file such as song title, artist, album title, encoding bit rate, track time duration, etc. ID3 tag information is displayed on the Album/Artist/Track title line on the display.

* Windows® and Windows Media® are either registered trademarks and trademarks of Microsoft Corporation in the United States and/or other countries.

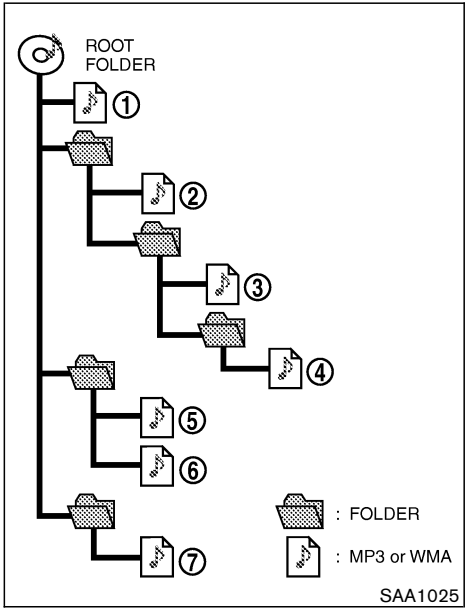

Playback order:

Playback order of the CD with compressed files (MP3/WMA) is as illustrated above.

- The names of folders not containing MP3/WMA files are not shown in the display.
- If there is a file in the top level of the disc, “ROOT” is displayed.
- The playback order is the order in which the files were written by the writing software. Therefore, the files might not play in the desired order.

Specification chart:

Supported media			CD, CD-R, CD-RW
Supported file systems			ISO9660 LEVEL1, ISO9660 LEVEL2, Romeo, Joliet * ISO9660 Level 3 (packet writing) is not supported.
Supported versions*1	MP3	Version	MPEG1, MPEG2, MPEG2.5
		Sampling frequency	8 kHz - 48 kHz
		Bit rate	8 kbps - 320 kbps, VBR
	WMA	Version	WMA7, WMA8, WMA9
		Sampling frequency	32 kHz - 48 kHz
		Bit rate	48 kbps - 192 kbps, VBR
Tag information (Song title and Artist name)			ID3 tag VER1.0, VER1.1, VER2.2, VER2.3 (MP3 only)
Folder levels			Folder levels: 8, Folders: 255 (including root folder), Files: 512 (Max. 255 files for one folder)
Text character number limitation			128 characters
Displayable character codes*2			01: ASCII, 02: ISO-8859-1, 03: UNICODE (UTF-16 BOM Big Endian), 04: UNICODE (UTF-16 Non-BOM Big Endian), 05: UNICODE (UTF-8), 06: UNICODE (Non-UTF-16 BOM Little Endian)

*1 Files created with a combination of 48 kHz sampling frequency and 64 kbps bit rate cannot be played.

*2 Available codes depend on what kind of media, versions and information are going to be displayed.

Troubleshooting guide:

Symptom	Cause and Countermeasure
Cannot play	Check if the disc was inserted correctly.
	Check if the disc is scratched or dirty.
	Check if there is condensation inside the player. If there is, wait until the condensation is gone (about 1 hour) before using the player.
	If there is a temperature increase error, the CD player will play correctly after it returns to the normal temperature.
	If there is a mixture of music CD files (CD-DA data) and MP3/WMA files on a CD, only the music CD files (CD-DA data) will be played.
	Files with extensions other than “.MP3”, “.WMA”, “.mp3” or “.wma” cannot be played. In addition, the character codes and number of characters for folder names and file names should be in compliance with the specifications.
	Check if the disc or the file is generated in an irregular format. This may occur depending on the variation or the setting of MP3/WMA writing applications or other text editing applications.
	Check if the finalization process, such as session close and disc close, is done for the disc.
	Check if the disc is protected by copyright.
Poor sound quality	Check if the disc is scratched or dirty.
	Bit rate may be too low.
It takes a relatively long time before the music starts playing.	If there are many folder or file levels on the MP3/WMA disc, or if it is a multisession disc, some time may be required before the music starts playing.
Music cuts off or skips	The writing software and hardware combination might not match, or the writing speed, writing depth, writing width, etc., might not match the specifications. Try using the slowest writing speed.
Skipping with high bit rate files	Skipping may occur with large quantities of data, such as for high bit rate data.
Move immediately to the next song when playing.	When a non-MP3/WMA file has been given an extension of “.MP3”, “.WMA”, “.mp3” or “.wma”, or when play is prohibited by copyright protection, there will be approximately 5 seconds of no sound and then the player will skip to the next song.
The songs do not play back in the desired order.	The playback order is the order in which the files were written by the writing software. Therefore, the files might not play in the desired order.

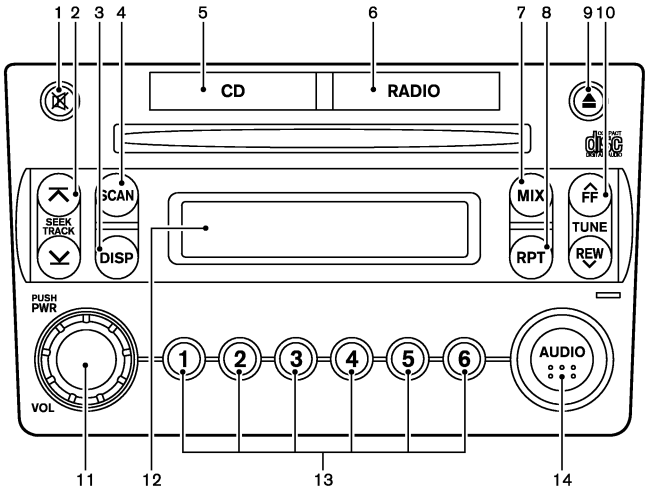

SAA1298

FM-AM RADIO WITH COMPACT DISC (CD) PLAYER

1. MUTE button
2. SEEK/APS REW, APS FF/TRACK CHANGE button
3. DISP (Display) CHANGE button
4. SCAN tuning button
5. CD play button
6. RADIO (FM/AM) band select button
7. MIX play button
8. RPT (Repeat) play button
9. CD EJECT button
10. TUNE/FF·REW button
11. ON·OFF/VOL (Volume) control knob
12. Audio/Clock display
13. Station and preset select button
14. AUDIO button

Audio main operation

For all operation precautions, see “Audio operation precautions” earlier in this section.

ON·OFF/Volume control:

Turn the ignition key to ACC or ON, and then push the ON·OFF/VOL (Volume) control knob while the system is off to call up the mode (radio or CD) which was playing immediately before the system was turned off. When no CD is loaded, the radio will come on. While the system is on, pushing the ON·OFF/VOL control knob turns the system off.

Turn the ON·OFF/VOL control knob to adjust the volume.

AUDIO button (BASS, TREBLE, FADER, BALANCE):

Press the AUDIO button to change the selecting mode as follows.

BASS → TREBLE → FADE → BALANCE

To adjust Bass, Treble, Fader and Balance, push the AUDIO button until the desired mode (BASS, TREBLE, FADER or BALANCE) appears in the display. Push the TUNE (∨ , ∧) or SEEK (⊻ , ⊼) button to adjust Bass and Treble to the desired level. Use the TUNE or SEEK button also to adjust Fader or Balance modes. Fader adjusts the sound level between the front and rear speakers and Balance adjusts the sound between the right and left speakers.

After 10 seconds, the radio or CD display reappears. Once the sound quality is set to the desired level, push the AUDIO button repeatedly until the radio or CD display appears.

MUTE button:

Push the MUTE button to mute the audio sound. Push the MUTE button again to release the mute.

DISP DISPLAY CHANGE:

Push the DISP button for more than 1.5 seconds to adjust the digital clock display. See “Clock” in the “2. Instruments and controls” section for the clock adjustment operation.

When the DISP button is pushed for less than 1.5 seconds while the compact disc is being played, the display will show the CD play time.

FM-AM radio operation

RADIO (FM/AM) band select:

Pushing the RADIO band select button will change the band as follows:

AM → FM1 → FM2 → AM

When RADIO band select button is pushed while the ignition switch is in the ACC or ON, the radio will come on at the station last played.

The last station played will also come on when the power knob is turned to ON.

If a compact disc is playing when the RADIO band select button is pushed, the compact disc will automatically be turned off and the last radio station played will come on.

The FM stereo indicator ST will glow during FM stereo reception. When the stereo broadcast signal is weak, the radio will automatically change from stereo to monaural reception.

TUNE (Tuning) :

Push the TUNE button ∨ or ∧ for manual tuning. To move quickly through the channels, push and hold either side of the TUNE button down for more than 0.5 second.

SEEK tuning:

Push the SEEK button ⊻ or ⊼ to tune from high to low or low to high frequencies and stops at the next broadcasting station.

SCAN tuning:

Push the SCAN tuning button to tune from low to high frequencies and stops at each broadcasting station for 5 seconds. Pushing the button again during this 5 second period will stop SCAN tuning and the radio will remain tuned to that station.

If the SCAN tuning button is not pushed within 5 seconds, SCAN tuning moves to the next station.

Station memory operations:

Twelve stations can be set for the FM band (six for FM1, six for FM2) and six stations can be set for the AM band.

1. Tune to the desired station using the SEEK, SCAN or TUNE button.
2. Select the desired station and keep pushing any of the desired station select buttons (1 to 6) until a beep sound is heard. (The radio mutes when the select button is pushed.)
3. The channel indicator will then come on and

the sound will resume. Memorizing is now complete.

4. Other buttons can be set in the same manner.

If the battery cable is disconnected, or if the fuse blows, the radio memory will be erased. In that case, reset the desired stations.

Compact disc (CD) player operation

Turn the ignition key to the ACC or ON position and insert the compact disc into the slot with the label side facing up. The compact disc will be guided automatically into the slot and start playing.

After loading the disc, the number of tracks on the disc will appear on the display.

If the radio is already operating, it will automatically turn off and the compact disc will play.

If the system has been turned off while the compact disc was playing, pushing the ON·OFF/VOL control knob will start the compact disc.

3.1 in (8 cm) diameter compact discs can also be used without an adapter.

CD PLAY:

When the CD (CD play) button is pushed with the system off and the compact disc loaded, the system will turn on and the compact disc will start to play.

When the CD button is pushed with the compact disc loaded but the radio playing, the radio will automatically be turned off and the compact disc will start to play.

CD PLAY TIME:

Push the DISP button for less than 1.5 seconds while the compact disc is being played to show the play time on the display.

FF (Fast Forward), REW (Rewind):

When the ∧ (fast forward) or ∨ (rewind) button is pushed while the compact disc is being played, the compact disc will play while fast forwarding or rewinding. When the button is released, the compact disc will return to normal play speed.

APS (Automatic Program Search) FF, APS REW/ TRACK CHANGE:

When the ⊼ (APS FF) button is pushed while the compact disc is being played, the program next to the present one will start to play from its beginning. Push several times to skip through programs. The compact disc will advance the number of times the button is pushed. (When the last program on the compact disc is skipped through, the first program will be played.) When the ⊻ (APS REW) button is pushed, the program being played returns to its beginning. Push several times to skip back through programs. The compact disc will go back the number of times the button is pushed.

SCAN tuning:

When the SCAN tuning button is pushed while the CD is being played, the beginning of all the tracks of CD will be played for 10 seconds in sequence.

Pushing the button again during this 10 second period will stop SCAN tuning. If the SCAN tuning button is not pushed within 10 seconds, SCAN tuning moves to the next CD program.

MIX play:

When the MIX button is pushed while the compact disc is being played, programs will be played at random, not following the sequence on the compact disc. The same program may be repeated twice. Push the MIX button again to return to the normal play mode.

REPEAT (RPT) play:

When the RPT button is pushed while the compact disc is being played, the play pattern can be changed as follows:

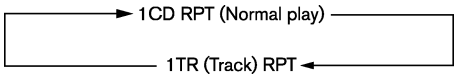

The display shows the following symbol; (no mark): 1 CD RPT (Repeat)

1: 1 TR (Track) RPT

CD EJECT:

When the CD EJECT button is pushed with the compact disc loaded, the compact disc will be ejected.

When this button is pushed while the compact disc is being played, the compact disc will come out and the system will turn off.

If the compact disc comes out and is not removed, it will be pulled back into the slot to protect it. (except for 3.1 in [8 cm] diameter compact discs)

If the following message appears on the display, push the EJECT button:

- CHECK DISC — Eject the disc, and check whether it is damaged or inserted upside-down.
- CD ERR F * — Eject the disc, and check whether it is a proper audio CD. (* shows a different number according to the audio condition.)

CD IN indicator:

CD IN indicator appears on the display when the CD is loaded.

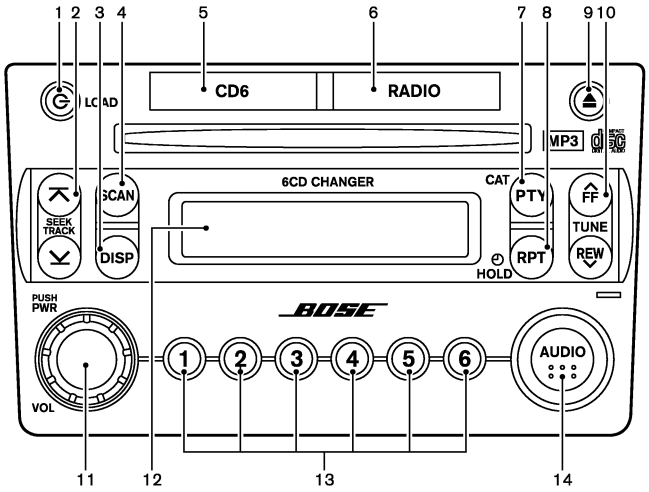

SAA1299

FM-AM-SAT RADIO WITH COMPACT DISC (CD) CHANGER

1. CD LOAD button
2. SEEK/APS REW, APS FF/TRACK CHANGE button
3. DISP (Display) CHANGE button
4. SCAN tuning button
5. CD PLAY button
6. RADIO (FM/AM/SAT*) band select button
7. PTY (Program type), CAT (Category)* select button
8. RPT (Repeat) play/CLOCK button
9. CD EJECT button
10. TUNE/FF·REW button
11. ON·OFF/VOL (Volume) control knob
12. Audio/Clock display
13. Station and preset (FM/AM/SAT*)/CD insert or CD play select button
14. AUDIO button

* No satellite radio reception is available when the SAT band option is selected unless optional satellite receiver and antenna are installed, and an XM® or SIRIUS™ satellite radio service subscription is active.

It may take some time to receive the activation signal after subscribing to the XM® or SIRIUS™ satellite radio provider. After receiving the activation signal, an available channel list will be automatically updated in the radio. For XM®, turn the ignition switch from the LOCK to ACC position to update the channel list.

Satellite radio is not available in Alaska and Hawaii.

Audio main operation

For all operation precautions, see “Audio operation precautions” earlier in this section.

Head unit:

The auto loudness circuit enhances the low

frequency range automatically in both radio reception and CD playback.

This audio system has an active noise compensation feature called “Audio Pilot”. The Audio Pilot uses a microphone to detect external road noise and automatically adjusts the amplifier to compensate for any competing high, midrange, or low frequency noise.

ON·OFF/Volume control:

Turn the ignition key to ACC or ON, and then push the ON·OFF/VOL (Volume) control knob while the system is off to call up the mode (radio or CD) which was playing immediately before the system was turned off. When no CD is loaded, the radio will come on. While the system is on, pushing the ON·OFF/VOL control knob turns the system off.

Turn the ON·OFF/VOL control knob to adjust the volume.

AUDIO button:

Push the AUDIO button to change the selecting mode as follows.

BASS → TREBLE → FADE → BALANCE → AUDIOP

To adjust Bass, Treble, Fader and Balance, push the AUDIO button until the desired mode (BASS, TREBLE, FADER or BALANCE) appears in the display. Push the TUNE (∨ , ∧) or SEEK (⌄ , ⌃) button to adjust Bass and Treble to the desired level. Use the TUNE or SEEK button also to adjust Fader or Balance modes. Fader adjusts the sound level between the front and rear speakers and Balance adjusts the sound between the right and left speakers.

To change the AUDIOP (Audio Pilot) mode to OFF or ON, push the TUNE or SEEK button.

Once you have adjusted the sound quality to the desired level, push the AUDIO button repeatedly until the radio or CD display reappears. Otherwise, the radio or CD display will automatically reappear after about 10 seconds.

RPT CLOCK adjusting:

Push the RPT button for more than 1.5 seconds to adjust the digital clock display.

When the clock adjusting display is selected, the time (hour or minute) will start flashing. See “Clock” in the “2. Instruments and controls” section for the detailed clock adjustment operation.

DISP DISPLAY CHANGE:

This button will work during satellite radio (if so equipped) and CD operation. Find the detailed function in the description of each item.

FM-AM-SAT radio operation

RADIO RADIO (FM/AM/SAT) band select:

Pushing the RADIO band select button will change the band as follows:

(Without satellite radio)

AM → FM1 → FM2 → AM

(With satellite radio)

AM → FM1 → FM2 → SAT1 → SAT2 → AM

No satellite operation is available during scrolling of modes, unless optional satellite receiver and antenna are installed, and an XM® or SIRIUS™ satellite radio service subscription is active.

When RADIO band select button is pushed while the ignition switch is in the ACC or ON, the radio will come on at the station last played.

The last station/channel played will also come on when the ON·OFF/VOL control knob is pushed to ON.

If a compact disc is playing when the RADIO band select button is turned to ON, the compact disc will automatically be turned off and the last radio station/channel played will come on.

The FM stereo indicator ST will glow during FM stereo reception. When the stereo broadcast signal is weak, the radio will automatically

change from stereo to monaural reception.

If the satellite radio signal is lost due to interference while driving, in a parking structure or tunnel for example, “NO SIGNAL” will be displayed and no satellite radio station will be available.

TUNE (Tuning):

Push the TUNE button ∨ or ∧ for manual tuning. To move quickly through the channels, push and hold either side of the TUNE button down for more than 0.5 second.

SEEK tuning:

(For FM and AM radio)

Push the SEEK button ⊻ or ⊼ to tune from high to low or low to high frequencies and stops at the next broadcasting station.

(For satellite radio)

Push the SEEK button ⊻ or ⊼ to seek channels of the next or previous category.

SCAN tuning:

Push the SCAN tuning button to tune from low to high frequencies and stops at each broadcasting station for 5 seconds. Pushing the button again during this 5 second period will stop SCAN tuning and the radio will remain tuned to that station.

If the SCAN tuning button is not pushed within 5 seconds, SCAN tuning moves to the next station.

DISP SAT radio display change (if so equipped):

- Pushing the DISP button will display additional information (for example: Title, Artist name) about the satellite radio broadcast.
- Pushing the DISP button for more than 1.5 seconds will change the display mode as follows:

  Channel number → Channel name → Artist name → Song title → Channel number

Station memory operations:

Twelve stations/channels can be set for the FM band (6 for FM1, 6 for FM2) and the SAT radio (6 for SAT1, 6 for SAT2), and 6 stations can be set for the AM band.

1. Tune to the desired station/channel using the SEEK, SCAN or TUNE button.
2. Select the desired station/channel and keep pushing any of the desired station/channel and preset buttons (1 to 6) until a beep sound is heard. (The radio mutes when the station and preset button is pushed.)
3. The channel indicator will then come on and the sound will resume. Memorizing is now complete.
4. Other buttons can be set in the same manner.

If the battery cable is disconnected, or if the fuse blows, the radio memory will be erased. In that case, reset the desired stations.

Radio data system (RDS):

RDS stands for Radio Data System, and is a data information service transmitted by some radio stations on the FM band (not AM band) and/or SAT encoded within a regular radio broadcast. Currently, most RDS stations are in large cities, but many stations are now considering broadcasting RDS data.

RDS can display:

- Station call sign, such as “WHFR 98.3”.
- Station name, such as “The Groove”.
- Music or programming type such as “Classical”, “Country”, or “Rock”.
- Traffic reports about delays or construction.

If the station broadcasts RDS information, the RDS icon is displayed.

PTY Program type (PTY)/Category (CAT) select:

When PTY button is pushed during FM mode, the PTY (CAT) name of the current tuned station is displayed. When the PTY (CAT) button is pushed during satellite radio mode (if so equipped), the category name of the current channel is displayed. During this time if the PTY data code is zero, or the data is unreadable, the display will show “NONE”.

1. PTY (CAT) selection mode

PTY (CAT) name selection can be done by the up/down TUNE button ⌃ or ⌄ in the PTY (CAT) selection mode.

It is possible to shift the PTY (CAT) name by one step, with one push of the up/down TUNE button ⌃ or ⌄ .

After selecting a PTY (CAT) name, push the SEEK button or SCAN button within 10 seconds. Tuning to the PTY (CAT) station will start. If you do not push the TUNE button within the 10 second period, the PTY (CAT) mode will be cancelled.

PTY (CAT) name selection can also be achieved by pushing the preset buttons.

Initial PTY (CAT) names are stored in the preset buttons, but these can be changed by pushing the preset buttons for more than 1.5 seconds when the desired PTY (CAT) name is in the display.

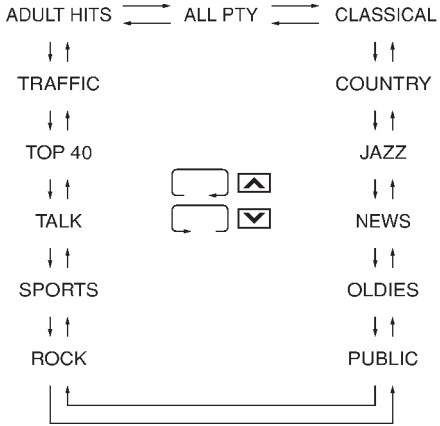

2. PTY (CAT) SEEK tuning mode

After selecting a PTY (CAT) name, push the SEEK button ⌄ or ⌃ within 10 seconds. Tuning to the PTY (CAT) station will start. If you do not push the SEEK button within the 10 second period, the PTY (CAT) mode will be cancelled.

3. PTY (CAT) SCAN tuning mode

Push the SCAN tuning button to tune the PTY (CAT) name station, and stop at each broadcasting station for 5 seconds. Pushing the button again during this 5 second period will stop SCAN tuning and the radio will remain tuned to that station. If the SCAN tuning button is not pushed within 5 seconds, SCAN tuning moves to the next station.

Compact disc (CD) changer operation

Turn the ignition key to the ACC or ON position, push the LOAD button and insert the compact disc into the slot with the label side facing up. The compact disc will be guided automatically into the slot and start playing.

After loading the disc, the number of tracks on the disc will appear on the display.

If the radio is already operating, it will automatically turn off and the compact disc will play.

⚠ CAUTION

Do not use 3.1 in (8 cm) discs.

If the system has been turned off while the compact disc was playing, pushing the

ON·OFF/VOL control knob will start the compact disc.

LOAD CD LOAD:

To insert a CD in the CD changer, push the LOAD button for less than 1.5 seconds. Select the loading slot by pushing the CD insert select button (1 to 6), then insert the CD.

To insert 6 CDs to the CD changer in succession, push the LOAD button for more than 1.5 seconds.

The inserted slot numbers will illuminate on the display.

CD6 CD PLAY:

When the CD6 (CD play) button is pushed with the system off and the compact disc loaded, the system will turn on and the compact disc will start to play.

When the CD6 button is pushed with the compact disc loaded but the tape or the radio playing, the tape or radio will automatically be turned off and the compact disc will start to play.

DISP CD PLAY INFORMATION:

When the DISP button is pushed for less than 1.5 seconds while the compact disc is being played, the play time will be displayed.

When the DISP button is pushed for more than 1.5 seconds while the CD is being played, the disc information display will change.

CD:

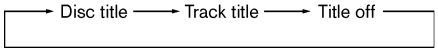

CD with MP3 or WMA:

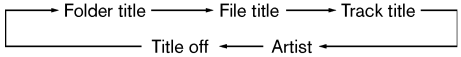

FF (Fast Forward), REW (Rewind):

CD:

When the ∧ (fast forward) or ∨ (rewind) button is pushed while the compact disc is being played, the compact disc will play while fast forwarding or rewinding. When the button is released, the compact disc will return to normal play speed.

CD with MP3 or WMA:

When the ∧ or ∨ button is pushed for less than 1.5 seconds while the compact disc is being played, the folders in the compact disc will change.

When the ∧ or ∨ button is pushed for more than 1.5 seconds while the compact disc is being played, the compact disc will play while forwarding or rewinding. When the button is released, the compact disc will return to the normal play speed.

APS (Automatic Program Search) FF, APS REW:

When the ⊼ (APS FF) button is pushed while the compact disc is being played, the program next to the present one will start to play from its beginning. Push several times to skip through programs. The compact disc will advance the number of times the button is pushed. (When the last program on the compact disc is skipped through, the first program will be played.) When the ⊻ (APS REW) button is pushed, the program being played returns to its beginning. Push several times to skip back through programs. The compact disc will go back the number of times the button is pushed.

CD PLAY select button:

To change CD, push the CD play select button (1 to 6).

SCAN SCAN tuning:

When the SCAN tuning button is pushed for less than 1.5 seconds while the CD is being played, the beginning of all the tracks of CDs will be played for 10 seconds in sequence.

When the SCAN tuning button is pushed for more than 1.5 seconds while the CD is being

played, the first program in all the CDs will be played for 10 seconds.

Pushing the button again during this 10 second period will stop SCAN tuning.

If the SCAN tuning button is not pushed within 10 seconds, SCAN tuning moves to the next disc program.

RPT REPEAT (RPT):

When the RPT play button is pushed while the compact disc is played, the play pattern can be changed.

CD:

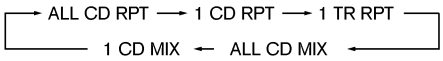

CD with MP3 or WMA:

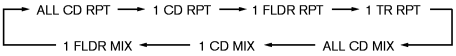

The display shows the following symbols.

(no mark): ALL CD RPT (Repeat)

1 DISC: 1 CD RPT

1: 1 TR (Track) RPT or 1 FLDR (Folder) RPT

MIX: ALL CD MIX

1 DISC MIX: 1 CD MIX

1 MIX: 1 FLDR MIX

CD EJECT:

When the CD EJECT button is pushed with the compact disc loaded, the compact disc will be ejected.

To eject the discs selected by the CD select button, push the EJECT button for less than 1.5 seconds.

To eject all the discs in succession, push the EJECT button for more than 1.5 seconds.

When this button is pushed while the compact disc is being played, the compact disc will come out and the system will turn off.

If the compact disc comes out and is not removed, it will be pulled back into the slot to protect it.

If either of the following messages appear on the display, push the EJECT button:

- PUSH EJECT — Eject the disc, and insert it again.
- CHECK DISC — Eject the disc, and check whether it is damaged or inserted upside-down.
- CD ERR F * — Eject the disc, and check whether it is a proper audio CD. (* shows a different number according to the audio condition.)

CD IN indicator:

CD IN indicator (inserted slot number 1 - 6) appears on the display when the CD is loaded.

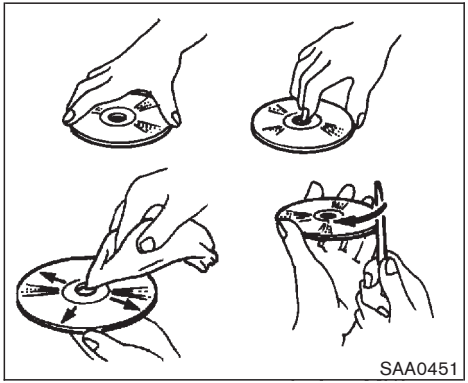

CD CARE AND CLEANING

- Handle a CD by its edges. Never touch the surface of the disc. Do not bend the disc.
- Always place the discs in the storage case when they are not being used.
- To clean a disc, wipe the surface from the center to the outer edge using a clean, soft cloth. Do not wipe the disc using a circular motion.
  Do not use a conventional record cleaner or alcohol intended for industrial use.
- A new disc may be rough on its inner and outer edges. Remove the rough edges using the side of a pen or pencil as illustrated.

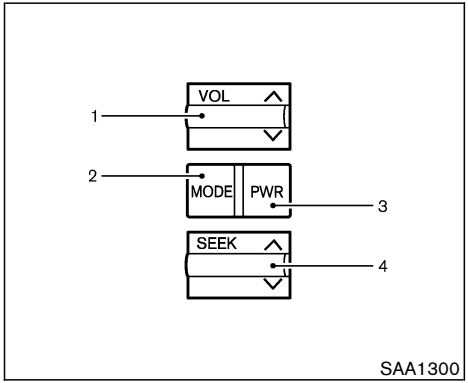

Type A

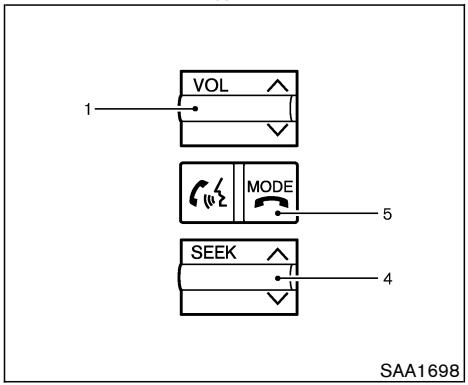

Type B

1. VOLUME control switch
2. MODE select switch
3. POWER on/off switch
4. Tuning switch
5. POWER on/MODE select switch

STEERING WHEEL SWITCH FOR AUDIO CONTROL (if so equipped)

The audio system can be operated using the controls on the steering wheel.

POWER on/off switch (for Type A)

With the ignition switch turned to the ACC or ON position, push the POWER on/off switch to turn the audio system on or off.

POWER on/MODE select switch (for Type B)

With the ignition switch turned to the ACC or ON position, push the POWER on/MODE select switch to turn the audio system on. Push the switch to change the mode in the sequence of AM, FM1, FM2, SAT1 (if so equipped), SAT2 (if so equipped) and CD.

MODE select switch (for Type A)

Push the MODE select switch to change the mode.

Without satellite radio:

AM, FM1, FM2 and CD or CD changer

With satellite radio:

AM, FM1, FM2, SAT1, SAT2 and CD changer

VOLUME control switches

Push up or down the VOLUME control switch to increase or decrease the volume.

∨ ∧ Tuning switch

Memory change (radio):

Push up or down the tuning switch for less than 1.5 seconds to change the radio frequency.

SEEK tuning (radio):

Push up or down the tuning switch for more than 1.5 seconds to seek the next or previous radio station.

APS (Automatic Program Search) FF, APS REW (CD or CD changer):

Push up or down the tuning switch for less than 1.5 seconds to return to the beginning of the present program or skip to the next program. Push several times to skip back or skip through programs.

This system searches for the blank intervals between selections. If there is a blank interval within one program or there is no interval between programs, the system may not stop in the desired or expected location.

FOLDER change (CD changer/CD with MP3 or WMA):

Push up or down the tuning switch for more than 1.5 seconds to change the folders (if there are any folders).

DISC change (CD changer/CD without MP3 or WMA):

Push up or down the tuning switch for more than 1.5 seconds to change the playing disc up or down.

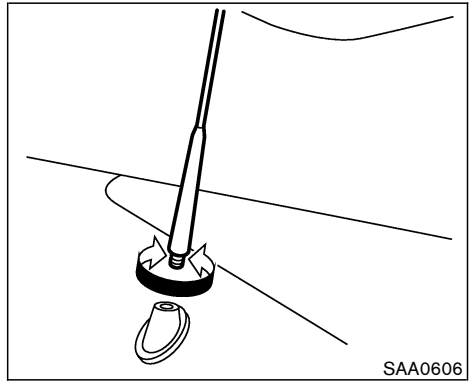

ANTENNA

The antenna is located at the rear of the vehicle. To remove the antenna, turn it counterclockwise. To reinstall it, screw it securely into the base.

⚠ CAUTION

Be sure to remove the antenna before entering a low-roof garage or an automatic car wash. Otherwise the antenna may be damaged.

CAR PHONE OR CB RADIO

When installing a CB, ham radio or car phone in your NISSAN vehicle, be sure to observe the following cautions, otherwise the new equipment may adversely affect the Engine Control system and other electronic parts.

WARNING

- **A cellular telephone should not be used while driving so full attention may be given to vehicle operation. Some jurisdictions prohibit the use of cellular telephones while driving.**
- **If you must make a call while your vehicle is in motion, the hands free cellular phone operational mode (if so equipped) is highly recommended. Exercise extreme caution at all times so full attention may be given to vehicle operation.**
- **If a conversation in a moving vehicle requires you to take notes, pull off the road to a safe location and stop your vehicle before doing so.**

CAUTION

- **Keep the antenna as far away as possible from the electronic control modules.**
- **Keep the antenna wire more than 8 in (20 cm) away from the electronic control system harnesses. Do not route the antenna wire next to any harness.**
- **Adjust the antenna standing-wave ratio as recommended by the manufacturer.**
- **Connect the ground wire from the CB radio chassis to the body.**
- **For details, consult a NISSAN dealer.**

BLUETOOTH® HANDS-FREE PHONE SYSTEM WITH NISSAN VOICE RECOGNITION (if so equipped)

WARNING

- **Use a phone after stopping your vehicle in a safe location. If you have to use a phone while driving, exercise extreme caution at all times so full attention may be given to vehicle operation.**
- **If a conversation in a moving vehicle requires you to take notes, pull off the road to a safe location and stop your vehicle before doing so.**

CAUTION

To avoid draining the vehicle battery, use a phone after starting the engine.

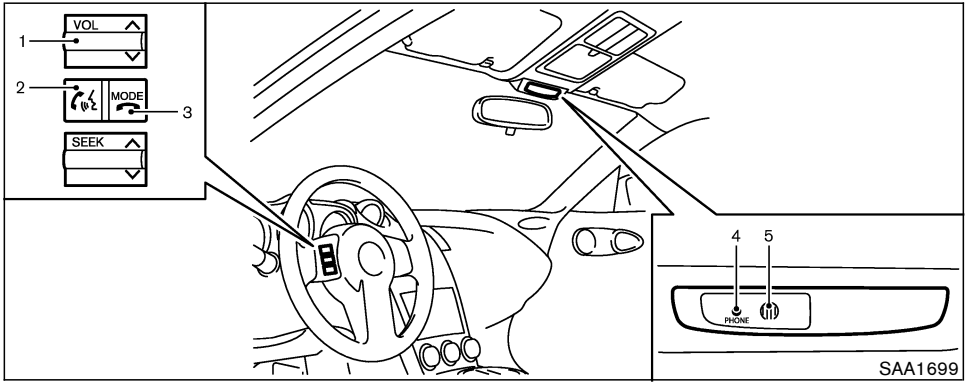

1. Volume control switch –/+
2. PHONE SEND button
3. PHONE END MODE button
4. Indicator light
5. Microphone

Your vehicle is equipped with the Bluetooth® Hands-Free Phone System. If you are an owner of a Bluetooth® enabled cellular phone, you can set up the wireless connection between your cellular phone and the in-vehicle phone module. With Bluetooth® wireless technology, you can make or receive a hands-free telephone call with your cellular phone in the vehicle.

Once your cellular phone is paired to the in-vehicle phone module, no other phone connecting procedure is required. Your phone is automatically connected with the in-vehicle phone module when the ignition switch is turned to the ON position with the paired cellular phone turned on and carried in the vehicle.

You can register up to 5 different Bluetooth® cellular phones to the in-vehicle phone module. However, you can talk on only one cellular phone at a time.

Before using the Bluetooth® Hands-Free Phone System, refer to the following notes.

- Set up the wireless connection between a cellular phone and the in-vehicle phone module before using the Bluetooth® Hands-Free Phone System.
- Some Bluetooth® enabled cellular phones may not be recognized by the in-vehicle phone module. Please visit www.nissanusa.com/bluetooth for a recommended phone list.
- You will not be able to use a hands-free phone under the following conditions:
  - Your vehicle is outside of the telephone service area.
  - Your vehicle is in an area where it is difficult to receive radio waves; such as in a tunnel, in an underground parking garage, near a tall building or in a mountainous area.
  - Your cellular phone is locked to prevent it from being dialed.

When the radio wave condition is not ideal or ambient sound is too loud, it may be difficult to hear the other person's voice during a call.

Do not place the cellular phone in an area surrounded by metal or far away from the in-vehicle phone module to prevent tone quality degradation and wireless connection disruption.

While a cellular phone is connected through the

Bluetooth® wireless connection, the battery power of the cellular phone may discharge quicker than usual. The Bluetooth® Hands-Free Phone System cannot charge cellular phones.

If the Bluetooth® Hands-Free Phone System seems to be malfunctioning, please refer to "Troubleshooting guide" later in this section. You can also visit www.nissanusa.com/bluetooth for troubleshooting help.

Refer to the cellular phone Owner's Manual regarding the telephone charges, cellular phone antenna and body, etc.

This device complies with Part 15 of the FCC Rules. Operation is subject to the following two conditions: (1) this device may not cause harmful interference, and (2) this device must accept any interference received, including interference that may cause undesired operation.

FCC Radiation Exposure Statement:

This equipment complies with FCC radiation exposure limits set forth for an uncontrolled environment. This equipment should be installed and operated with minimum distance 8 in (20 cm) between the radiator and your body. This Transmitter must not be co-located or operating in conjunction with any other antenna or transmitter.

USING THE SYSTEM

The NISSAN Voice Recognition system allows hands-free operation of the Bluetooth® Hands-Free Phone System.

If the vehicle is in motion, some commands may not be available so full attention may be given to vehicle operation.

Initialization

When the ignition switch is turned to the ON position, NISSAN Voice Recognition is initialized, which takes a few seconds. When completed, the amber light on the overhead console illuminates and the system is ready to accept voice commands. If the button is pushed before the initialization completes, the system will announce "Hands-free phone system not ready" and will not react to voice commands.

Operating tips

To get the best performance out of the NISSAN Voice Recognition system, observe the following:

- Keep the interior of the vehicle as quiet as possible. Close the windows to eliminate surrounding noises (traffic noises, vibration sounds, etc.), which may prevent the system from recognizing voice commands correctly.
- Wait until the tone sounds before speaking a command. Otherwise, the command will not be received properly.
- Start speaking a command within 5 seconds after the tone sounds.
- Speak in a natural voice without pausing between words.

Giving voice commands

To operate NISSAN Voice Recognition, push and release the button located on the steering wheel. The light on the overhead console flashes to signal you have entered a voice recognition (VR) session. After the tone sounds, speak a command.

The command given is picked up by the microphone, and voice feedback is given when the command is accepted.

- If you need to hear the available commands for the current menu again, say "Help" and the system will repeat them.
- If a command is not recognized, the system announces, "Command not recognized. Please try again." Repeat the command in a clear voice.
- If you want to go back to the previous command, you can say "Go back" or "Cor-

rection" anytime the system is waiting for a response.

- You can cancel a command when the system is waiting for a response by saying, "Cancel" or "Quit." The system announces "Cancel" and ends the VR session. You can also push the MODE button on the steering wheel at any time. Whenever the VR session is cancelled, a double beep is played to indicate you have exited the system.
- If you want to adjust the volume of the voice feedback, push the volume control switch (+ or –) on the steering wheel while being provided with feedback. You can also use the radio volume control knob.

How to say numbers

NISSAN Voice Recognition requires a certain way to speak numbers in voice commands. Refer to the rules and examples below.

- Either "zero" or "oh" can be used for "0".

  Example: 1-800-662-6200

  — "One eight oh oh six six two six two oh oh", or

  — "One eight zero zero six six two six two oh oh"

- Words can be used for the first 4 digits places only.

  Example: 1-800-662-6200

  — "One eight hundred six six two six two oh oh",

  — NOT "One eight hundred six six two sixty two hundred, and

  — NOT "One eight oh oh six six two sixty two hundred.

- Numbers can be spoken in small groups. The system will prompt you to continuing entering digits, if desired.

  Example: 1-800-662-6200

  — "One eight oh oh"

  The system repeats the numbers and prompts you to enter more.

  — "six six two"

  The system repeats the numbers and prompts you to enter more.

  — "six two oh oh"

- You can say "Star" for * and "Pound" for # at anytime in any position of the phone number.

  Example: 1-555-1212 *123

  — "One five five five one two one two star one two three"

NOTE:

For best results, say phone numbers as single digits.

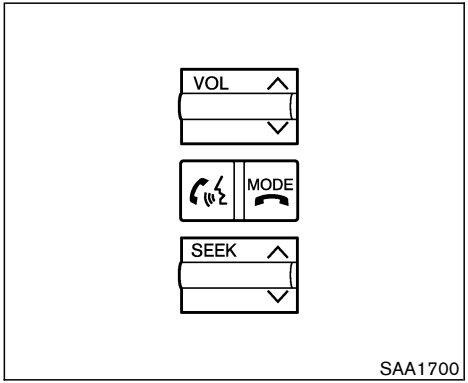

CONTROL BUTTONS

The control buttons for the Bluetooth® Hands-Free Phone System are located on the steering wheel.

TALK/PHONE SEND

Push the button to initiate a VR session or answer an incoming call.

You can also use the button to skip through system feedback and to enter commands during a call. See “List of voice commands” and “During a call” later in this section for more information.

MODE/PHONE END

Push the MODE button to cancel a VR session or end a call.

GETTING STARTED

The following procedures will help you get started using the Bluetooth® Hands-Free Phone System with NISSAN Voice Recognition. For additional command options, refer to “List of voice commands” later in this section.

Choosing a language

You can interact with the Bluetooth® Hands-Free Phone System using English, Spanish or French.

To change the language, perform the following.

1. Press and hold the button for more than 5 seconds.
2. The system announces: “Press the PHONE SEND ( ) button for the hands-free phone system to enter the speaker adaptation mode or press the PHONE END (MODE) button to select a different language.”
3. Press the MODE button.

   For information on speaker adaptation, see “Speaker adaptation (SA) mode” later in this section.
4. The system announces the current language and gives you the option to change the language to Spanish (in Spanish) or French (in French). Use the following chart to select the language.

NOTE:

You must press the button or the MODE button within 5 seconds to change the language.

Current language	Press (TALK/PHONE SEND) to select	Press MODE (MODE/PHONE END) to select
English	Spanish	French
Spanish	English	French
French	English	Spanish

5. If you decide not to change the language, do not press either button. After 5 seconds, the VR session will end, and the language will not be changed.

Pairing procedure

```
Main menu
   "Setup" (A)
      "Pair Phone" (B)
         "New Phone" (C)
            Initiate from handset (D)
               Name phone (E)
                  Assign priority (F)
                     Choose ringtone (G)
```

1. Push the button on the steering wheel. The system announces the available commands.
2. Say: "Setup" (A). The system acknowledges the command and announces the next set of available commands.
3. Say: "Pair phone" (B). The system acknowledges the command and announces the next set of available commands.
4. Say: "New phone" (C). The system acknowledges the command and asks you to initiate pairing from the phone handset (D).

   When you are asked to enter a PIN code for pairing your Bluetooth® cellular phone, operate it to enter the code "1234".

   The code is always "1234" regardless of the number of phones paired.

   The pairing procedure of the cellular phone varies according to each cellular phone. See the cellular phone Owner's Manual for details. You can also visit www.nissanusa.com/bluetooth for instructions on pairing NISSAN recommended cellular phones.
5. The system asks you to say a name for the phone (E).

   If the name is too long or too short, the system tells you, then prompts you for a name again.

   Also, if more than one phone is paired and the name sounds too much like a name already used, the system tells you, then prompts you for a name again.
6. The system asks you to assign a priority level (F). The priority level determines which phone is active when more than one paired Bluetooth® phone is in the vehicle. Follow the instructions provided by the system or refer to "Setup" later in this section for more information on changing priorities.
7. The system will ask if you would like to select a custom ring tone (G). Follow the instructions provided by the system or refer to "Setup" later in this section for more information on selecting ringtones.

Making a call by entering a phone number

```
Main menu
   "Call" (A)
      Number (speak digits) (B)
         "Dial" (C)
```

1. Push the button on steering wheel. A tone will sound.
2. Say: "Call" (A). The system acknowledges the command and announces the next set of available commands.
3. Say the number you wish to call (B). For example, 555-1212 can be said as "five five five one two one two." See "How to say numbers" earlier in this section for more information.
4. When you have finished speaking the phone number, the system repeats it back and announces the available commands.
5. Say: "Dial" (C). The system acknowledges the command and makes the call.

For additional command options, see "List of voice commands" later in this section.

Receiving a call

When you hear the ring tone, press the button on the steering wheel.

Once the call has ended, press the MODE button on the steering wheel.

NOTE:

If you do not wish to take the call when you hear the ring tone, press the MODE button on the steering wheel to reject the call.

For additional command options, see “List of voice commands” later in this section.

LIST OF VOICE COMMANDS

Main menu
“Call”
“Phone Book”
“Memo Pad”
“Setup”

When you push and release the button on the steering wheel, you can choose from the commands on the Main Menu. The following pages describe these commands and the commands in each sub-menu.

Remember to wait for the tone before speaking.

You can say “Help” to hear the list of commands currently available anytime the system is waiting for a response.

If you want to end an action without completing it, you can say “Cancel” or “Quit” at anytime the system is waiting for a response. The system will end the VR session. Whenever the VR session is cancelled, a double beep is played to indicate you have exited the system.

If you want to go back to the previous command, you can say “Go back” or “Correction” anytime the system is waiting for a response.

When you get used to the menus in the system, you can talk ahead by saying more than one command at a time. For example, say, “Call five five five one two one two” or “Memo pad record.”

Also, when you get used to the system responses, you can skip ahead to the tone by pressing the button on the steering wheel. However, if you press the button when the system is waiting for a response from you it will end the VR session.

“Call”

Main menu		
	“Call”	
		Name (speak name) Ⓐ
		Number (speak digits) Ⓑ
		“Redial” Ⓒ
		“Call Back” Ⓓ

Name (speak name) Ⓐ

If you have stored entries in the Phone Book, you can dial a number associated with a name and location.

See “Phone book” later in this section to learn how to store entries.

When prompted by the system, say the name of the phone book entry you wish to call. The system acknowledges the name.

If there are multiple locations associated with the name, the system asks you to choose the location.

Once you have confirmed the name and location, the system begins the call.

Number (speak digits) Ⓑ

When prompted by the system, say the number

you wish to call. Refer to “How to say numbers” and “Making a call by entering a phone number” earlier in this section for more details.

“Redial” (C)

Use the Redial command to call the last number that was dialed within the vehicle.

NOTE:

The system will not redial the last number dialed by the handset keypad.

The system acknowledges the command, repeats the number and begins dialing.

If a redial number does not exist, the system announces, “There is no number to redial” and ends the VR session.

“Call back” (D)

Use the Call Back command to dial the number of the last incoming call within the vehicle.

The system acknowledges the command, repeats the number and begins dialing. If a call back number does not exist, the system announces, “There is no number to call back” and ends the VR session.

During a call

During a call there are several command options available. Press the button on the steering wheel to mute the receiving voice and enter commands.

- “Help” — The system announces the available commands.
- “Go back/Correction” — The system announces “Go back,” ends the VR session and returns to the call.
- “Cancel/Quit” — The system announces “Cancel,” ends the VR session and returns to the call.
- “Send/Enter/Call/Dial” — Use the Send command to enter numbers during a call. For example, if you were directed to dial an extension by an automated system:

  Say: “Send one two three four.”

  The system acknowledges the command and sends the tones associated with the numbers. The system then ends the VR session and returns to the call.
- “Transfer call” — Use the Transfer Call command to transfer the call from the Bluetooth® Hands-Free Phone System to the cellular phone when privacy is desired.

  The system announces, “Transfer call. Call transferred to privacy mode.” The system then ends the VR session.

  You can also issue the Transfer Call command again to return to a hands-free call through the vehicle.
- “Mute” — Use the Mute command to mute your voice so the other party cannot hear it. Use the mute command again to unmute your voice.

NOTE:

If the other party ends the call or the cellular phone network connection is lost while the Mute feature is on, the Mute feature may need to be reset to “off.”

“Phone book”

Main menu
- “Phone Book”
  - “New Entry” (A)
  - “Edit” (B)
  - “Delete” (C)
  - “List Names” (D)

The Phone Book stores up to 40 names for each phone paired with the system. Each name can have up to 4 locations/phone numbers associated with it.

NOTE:

Each phone has its own separate phone book. You cannot access Phone A's phone book if you are currently connected with Phone B.

"New entry" Ⓐ

Use the New Entry command to store a new name in the system.

When prompted by the system, say the name you would like to give the new entry.

For example, say: "Mary."

If the name is too long or too short, the system tells you, then prompts you for a name again.

Also, if the name sounds too much like a name already stored, the system tells you, then prompts you for a name again.

Once the system accepts the name and you confirm it is correct, the system asks for a location (Home, Office, Mobile or Other).

For example, say: "Home."

The system acknowledges the location. The system will ask you to say a phone number or to transfer a phone number stored in the cellular phone's memory.

To enter a phone number by voice command:

For example, say: "five five five one two one two." See "How to say numbers" earlier in this section for more information.

To transfer a phone number stored in the cellular phone's memory (if so equipped):

Say: "Transfer entry."

The system acknowledges the command and asks you to initiate the transfer from the phone handset. The new contact phone number will be transferred from the cellular phone via the Bluetooth® communication link.

The transfer procedure varies according to each cellular phone. See the cellular phone Owner's Manual for details. You can also visit www.nissanusa.com/bluetooth for instructions on transferring phone numbers from NISSAN recommended cellular phones.

The system repeats the number and prompts you for the next command. When you have finished entering numbers, choose "Store."

The system confirms the name, location and number. The system then asks if you would like to store another location for the same name. If you do not wish to store another location, the system ends the VR session.

"Edit" Ⓑ

Use the Edit command to alter an existing phone book entry or to add a 2nd, 3rd or 4th phone number to an existing entry.

When prompted by the system, say the name of the entry you wish to edit.

The system acknowledges the name and asks you for the location you would like to edit.

Say the name of the location. The system acknowledges the location. The system will ask you to say a phone number or to transfer a phone number stored in the cellular phone's memory.

To enter a phone number by voice command:

For example, say: "five five five one two one two." See "How to say numbers" earlier in this section for more information.

To transfer a phone number stored in the cellular phone's memory (if so equipped):

Say: "Transfer entry."

The system acknowledges the command and asks you to initiate the transfer from the phone handset. The new contact phone number will be transferred from the cellular phone via the Bluetooth® communication link.

The transfer procedure varies according to each cellular phone. See the cellular phone Owner's Manual for details. You can also visit www.nissanusa.com/bluetooth for instructions

on transferring phone numbers from NISSAN recommended cellular phones.

The system repeats the number and prompts you for the next command. When you have finished entering numbers, choose “Store.”

The system confirms the name, location and number, then announces that the entry has been stored. The system then ends the VR session.

“Delete” Ⓒ

Use the Delete command to erase one entry from the phone book, all entries from the phone book, the current redial number or the current call back number.

To delete entries from the phone book, say a name or “All entries” when prompted by the system.

The system acknowledges the command and asks you to confirm the deletion.

To delete the current redial number or call back number, say “redial number” or “call back number” when prompted by the system.

If a redial number or a call back number exists, the system deletes them without asking for confirmation.

If there is no number for the entry you are trying to delete, the system says so and ends the VR session.

“List names” Ⓓ

Use the List Names command to hear all the names and locations in the phone book.

The system recites the phone book entries but does not include the actual phone numbers. When the playback of the list is complete, the system returns to the main menu.

You can stop the playback of the list at any time by pressing the MODE button on the steering wheel. The system ends the VR session.

“Memo pad”

Main menu
- “Memo Pad”
  - “Play” Ⓐ
  - “Record” Ⓑ
  - “Delete” Ⓒ

The Memo Pad records a maximum of 6 voice memos, each up to 20 seconds long.

“Play” Ⓐ

The system plays back all the memos in the order of newest to oldest. The system ends the VR session.

If there are no memos recorded, the system announces “No messages to play.” The system ends the VR session.

“Record” Ⓑ

The system announces “Recording” and a tone sounds signaling you to begin.

Speak the information you wish to record clearly. When you are done, press the or MODE button on the steering wheel.

A tone sounds and the system announces “Memo recorded.” Another tone sounds to end the VR session.

If the memo pad is full, the system asks if you wish to record over the oldest memo.

“Delete” Ⓒ

The Delete command erases all memos. The system asks you to confirm this action before deleting all memos.

“Setup”

Main menu
- “Setup”
  - “Pair Phone” Ⓐ
  - “List Phones” Ⓑ
  - “Select Phone” Ⓒ
  - “Change Priority” Ⓓ
  - “Delete Phone” Ⓔ
  - “Select Ringtone” Ⓕ
  - “Bluetooth Off” Ⓖ

Use the Setup command to change options associated with the Bluetooth® Hands-Free Phone System.

“Pair phone” Ⓐ

Use the Pair Phone command to pair a phone to the Bluetooth® Hands-Free Phone System.

When you are asked to enter a PIN code for pairing your Bluetooth® cellular phone, operate it to enter the code “1234”.

The code is always “1234” regardless of the number of phones paired.

Up to 5 phones can be paired. If you try to pair a sixth phone, the system announces that you must first delete one phone or replace an existing phone.

If you try to pair a phone that has already been paired to your vehicle’s system, the system announces the name the phone is already using. The pairing procedure will then be cancelled.

When prompted by the system, choose from the following commands:

- “New phone” — Refer to “Pairing a phone” earlier in this section.
- “Replace phone” — The system announces the names of the phones already paired and asks which you would like to replace.

  Once you say the name of the phone you wish to replace, the paring procedure will begin. Refer to “Pairing procedure” earlier in this section.
- “List phones” — See the description below.

“List phones” Ⓑ

Use the List Phones command to hear the names of the phones currently paired. If no phones are paired, the system announces, “No paired phones to list.” The system then ends the VR session.

“Select phone” Ⓒ

Use the Select Phone command to select a phone of lesser priority when two or more phones paired with Bluetooth® Hands-Free Phone System are in the vehicle at the same time.

The system asks you to name the phone and confirm the selection.

Once the selection is confirmed, the selected phone remains active until the ignition switch is turned OFF or you select a new phone.

“Change priority” Ⓓ

Use the Change Priority command to change the priority level of the active phone.

The priority level determines which phone is active when more than one paired Bluetooth® phone is in the vehicle.

The system states the priority level of the active phone and asks for a new priority level (1, 2, 3, 4, 5).

If the new priority level is already being used for another phone, the two phones will swap priority levels.

For example, if the current priority levels are:

Priority Level 1 = Phone A
Priority Level 2 = Phone B
Priority Level 3 = Phone C

and you change the priority level of Phone C to Level 1, then:

Priority Level 1 = Phone C
Priority Level 2 = Phone B
Priority Level 3 = Phone A

“Delete phone” (E)

Use the Delete Phone command to delete a specific phone or all phones from the Bluetooth® Hands-Free Phone System.

The system announces the names of the phones already paired with the system and their priority level. The system then gives you the option to delete a specific phone, all phones or listen to the list again.

Once you chose to delete a phone or all phones, the system asks you to confirm this action.

NOTE:

When you delete a phone, the associated phone book for that phone will also be deleted.

“Select ringtone” (F)

Use the Select Ringtone command to select the tone heard in the vehicle when an incoming call is received.

The system announces the name of the active phone and asks you to choose from the following commands:

- “Ringtone” — The system plays a ringtone and asks if you would like to select that tone. If you say no, the system plays the next ringtone available and continues to cycle through the ringtones until you select one or quit.
- “Silent” — The system asks you to confirm your wish to disable the ringtone.

“Bluetooth off” (G)

Use the Bluetooth Off command to turn off the Bluetooth® Hands-Free Phone System.

When Bluetooth® Hands-Free Phone System is off, you will not be able to make or receive calls using NISSAN Voice Recognition. Also, you will not have access to the Phone Book.

You can still use the Memo Pad and access Setup.

To turn on the system again, choose the Bluetooth On command from the Setup command.

SPEAKER ADAPTATION (SA) MODE

Speaker Adaptation allows up to two out-of dialect users to train the system to improve recognition accuracy. By repeating a number of commands, the users can create a voice model of their own voice that is stored in the system. The system is capable of storing a different speaker adaptation model for memory A and memory B.

If memory A is available, the system will use memory A to store the model. If memory A is in use and memory B is available, the system will use memory B to store the model. If both of the memory locations are in use, the system will ask the user to select which memory location should be overwritten.

Training procedure

The procedure for training a voice is as follows.

1. Position the vehicle in a reasonably quiet outdoor location.
2. Sit in the driver’s seat with the engine running, the parking brake on, and the transmission in Park.
3. Press and hold the button for more than 5 seconds.
4. The system announces: “Press the PHONE SEND ( ) button for the hands-free phone system to enter the speaker adaptation mode or press the PHONE END (MODE) button to select a different language.”
5. Press the button.

For information on selecting a different language, see “Choosing a language” earlier in this section.

6. Voice memory A or memory B is selected automatically. If both memory locations are already in use, the system will prompt you to overwrite one. Follow the instructions provided by the system.
7. When preparation is complete and you are ready to begin, press the button.
8. The SA mode will be explained. Follow the instructions provided by the system.
9. When training is finished, the system will tell you an adequate number of phrases have been recorded.
10. The system will ask you to say your name. Follow the instructions to register your name.
11. The system will announce that speaker adaptation has been completed and the system is ready.

The SA mode will stop if:

- The button is pressed for more than 5 seconds in SA mode.
- The vehicle is driven during SA mode.
- The ignition switch is turned to the OFF or LOCK position.

Training phrases

During the SA mode, the system instructs you to say the following phrases.

(The system will prompt you for each phrase.)

- phone book new entry
- dial three oh four two nine
- delete call back number
- setup pair phone
- memo pad play
- eight pause nine three two pause seven
- delete all entries
- call seven two four zero nine
- phone book delete entry
- memo pad record
- dial star two one seven oh
- Yes
- No
- select ring tone
- dial eight five six nine two
- Bluetooth on
- setup change priority
- call three one nine oh two
- nine seven pause pause three oh eight
- Cancel
- call back number
- call star two zero nine five
- delete phone
- dial eight three zero five one
- Home
- four three pause two nine pause zero
- delete redial number
- phone book list names
- call eight oh five four one
- Correction
- setup change ring tone
- dial seven four oh one eight
- setup main menu
- Delete
- dial nine seven two six six
- memo pad delete
- call seven six three oh one
- go back

- call five six two eight zero
- dial six six four three seven

TROUBLESHOOTING GUIDE

The system should respond correctly to all voice commands without difficulty. If problems are encountered, try the following solutions.

Where the solutions are listed by number, try each solution in turn, starting with number 1, until the problem is resolved.

Symptom	Solution
System fails to interpret the command correctly.	1. Ensure that the command is valid. See “List of voice commands” earlier in this section.
	2. Ensure that the command is spoken after the tone.
	3. Speak clearly without pausing between words and at a level appropriate to the ambient noise level in the vehicle.
	4. Ensure that the ambient noise level is not excessive (for example, windows open or defroster on). NOTE: If it is too noisy to use the phone, it is likely that the voice commands will not be recognized.
	5. If more than one command was said at a time, try saying the commands separately.
	6. If the system consistently fails to recognize commands, the voice training procedure should be carried out to improve the recognition response for the speaker. See “Speaker adaptation (SA) mode” earlier in this section.
The system consistently selects the wrong entry from the phone book.	1. Ensure that the phone book entry name requested matches what was originally stored. This can be confirmed by using the “List Names” command. See “Phone book” earlier in this section.
	2. Replace one of the names being confused with a new name.

MEMO

5 Starting and driving

Precautions when starting and driving 5-2
Exhaust gas (Carbon monoxide) 5-2
Three-way catalyst 5-3
Tire pressure monitoring system (TPMS) 5-3
Avoiding collision and rollover 5-5
Drinking alcohol/drugs and driving 5-6
Ignition switch 5-6
Automatic transmission 5-7
Manual transmission 5-7
Key positions 5-8
NISSAN Vehicle Immobilizer System 5-8
Before starting the engine 5-9
Starting the engine 5-9
Driving the vehicle 5-10
Automatic transmission 5-10
Manual transmission 5-13
Parking brake 5-15
Cruise control (if so equipped) 5-16
Precautions on cruise control 5-16
Cruise control operations 5-17
Break-in schedule 5-18
Increasing fuel economy 5-18
Parking/parking on hills 5-19
Power steering 5-20
Brake system 5-21
Braking precautions 5-21
Anti-lock Braking System (ABS) 5-21
Traction Control System (TCS) (if so equipped) 5-23
Vehicle Dynamic Control (VDC) system
(if so equipped) 5-23
Cold weather driving 5-25
Freeing a frozen door lock 5-25
Anti-freeze 5-25
Battery 5-25
Draining of coolant water 5-25
Tire equipment 5-25
Special winter equipment 5-26
Driving on snow or ice 5-26
Engine block heater (if so equipped) 5-26

PRECAUTIONS WHEN STARTING AND DRIVING

WARNING

- **Do not leave children or adults who would normally require the support of others alone in your vehicle. Pets should not be left alone either. They could accidentally injure themselves or others through inadvertent operation of the vehicle. Also, on hot, sunny days, temperatures in a closed vehicle could quickly become high enough to cause severe or possibly fatal injuries to people or animals.**
- **Properly secure all cargo to help prevent it from sliding or shifting. Do not place cargo higher than the seatbacks. In a sudden stop or collision, unsecured cargo could cause personal injury. (Coupe models)**
- **Closely supervise children when they are around cars to prevent them from playing and becoming locked in the trunk where they could be seriously injured. Keep the car locked with the trunk closed when not in use, and prevent children's access to car keys. (Roadster models)**

EXHAUST GAS (Carbon monoxide)

WARNING

Do not breathe exhaust gases; they contain colorless and odorless carbon monoxide. Carbon monoxide is dangerous. It can cause unconsciousness or death.

- **If you suspect that exhaust fumes are entering the vehicle, drive with all windows fully open, and have the vehicle inspected immediately.**
- **Do not run the engine in closed spaces such as a garage.**
- **Do not park the vehicle with the engine running for any extended length of time.**
- **Keep the rear hatch/trunk lid closed while driving, otherwise exhaust gases could be drawn into the passenger compartment. If you must drive with the rear hatch/trunk lid open, follow these precautions:**
  1. **Open all the windows.**
  2. **Set the air recirculation mode OFF and the fan control at the maximum position to circulate the air.**
- **If electrical wiring or other cable connections must pass to a trailer through the seal on the rear hatch/trunk lid or the body, follow the manufacturer's recommendation to prevent carbon monoxide entry into the vehicle.**
- **If a special body, camper, or other equipment is added for recreational or other usage, follow the manufacturer's recommendation to prevent carbon monoxide entry into the vehicle. Some recreational vehicle appliances such as stoves, refrigerators, heaters, etc. may also generate carbon monoxide.**

- **The exhaust system and body should be inspected by a qualified mechanic whenever:**
  - **The vehicle is raised for service.**
  - **You suspect that exhaust fumes are entering into the passenger compartment.**
  - **You notice a change in the sound of the exhaust system.**
  - **You have had an accident involving damage to the exhaust system, underbody, or rear of the vehicle.**

THREE-WAY CATALYST

The three-way catalyst is an emission control device installed in the exhaust system. Exhaust gases in the converter are burned at high temperatures to help reduce pollutants.

WARNING

- **The exhaust gas and the exhaust system are very hot. Keep people, animals or flammable materials away from the exhaust system components.**
- **Do not stop or park the vehicle over flammable materials such as dry grass, waste paper or rags. They may ignite and cause a fire.**

CAUTION

- **Do not use leaded gasoline. Deposits from leaded gasoline will seriously reduce the three-way catalyst's ability to help reduce exhaust pollutants.**
- **Keep your engine tuned up. Malfunctions in the ignition, fuel injection, or electrical systems can cause overrich fuel flow into the three-way catalyst, causing it to overheat. Do not keep driving if the engine misfires, or if noticeable loss of performance or other unusual operating conditions are detected. Have the vehicle inspected promptly by a NISSAN dealer.**
- **Avoid driving with an extremely low fuel level. Running out of fuel could cause the engine to misfire, damaging the three-way catalyst.**
- **Do not race the engine while warming it up.**
- **Do not push or tow your vehicle to start the engine.**

TIRE PRESSURE MONITORING SYSTEM (TPMS)

Each tire, including the spare (if provided), should be checked monthly when cold and inflated to the inflation pressure recommended by the vehicle manufacturer on the vehicle placard or tire inflation pressure label. (If your vehicle has tires of a different size than the size indicated on the vehicle placard or tire inflation pressure label, you should determine the proper tire inflation pressure for those tires.)

As an added safety feature, your vehicle has been equipped with a tire pressure monitoring system (TPMS) that illuminates a low tire pressure telltale when one or more of your tires is significantly under-inflated. Accordingly, when the low tire pressure telltale illuminates, you should stop and check your tires as soon as

possible, and inflate them to the proper pressure. Driving on a significantly under-inflated tire causes the tire to overheat and can lead to tire failure. Under-inflation also reduces fuel efficiency and tire tread life, and may affect the vehicle's handling and stopping ability.

Please note that the TPMS is not a substitute for proper tire maintenance, and it is the driver's responsibility to maintain correct tire pressure, even if under-inflation has not reached the level to trigger illumination of the TPMS low tire pressure telltale.

Your vehicle has also been equipped with a TPMS malfunction indicator to indicate when the system is not operating properly. The TPMS malfunction indicator is combined with the low tire pressure telltale. When the system detects a malfunction, the telltale will flash for approximately one minute and then remain continuously illuminated. This sequence will continue upon subsequent vehicle start-ups as long as the malfunction exists. When the malfunction indicator is illuminated, the system may not be able to detect or signal low tire pressure as intended. TPMS malfunctions may occur for a variety of reasons, including the installation of replacement or alternate tires or wheels on the vehicle that prevent the TPMS from functioning properly. Always check the TPMS malfunction telltale after replacing one or more tires or wheels on your vehicle to ensure that the replacement or alternate tires and wheels allow the TPMS to continue to function properly.

Additional information

- The TPMS does not monitor the tire pressure of the spare tire.
- The TPMS will activate only when the vehicle is driven at speeds above 16 MPH (25 km/h). Also, this system may not detect a sudden drop in tire pressure (for example a flat tire while driving).
- The low tire pressure warning light does not automatically turn off when the tire pressure is adjusted. After the tire is inflated to the recommended pressure, the vehicle must be driven at speeds above 16 MPH (25 km/h) to activate the TPMS and turn off the low tire pressure warning light. Use a tire pressure gauge to check the tire pressure.
- Tire pressure rises and falls depending on the heat caused by the vehicle's operation and the outside temperature. Low outside temperature can lower the temperature of the air inside the tire which can cause a lower tire inflation pressure. This may cause the low tire pressure warning light to illuminate. If the warning light illuminates in low ambient temperature, check the tire pressure for all four tires.

For additional information, see "Low tire pressure warning light" in the "2. Instruments and controls" section and "Tire pressure monitoring system (TPMS)" in the "6. In case of emergency" section.

WARNING

- **If the low tire pressure warning light illuminates while driving, avoid sudden steering maneuvers or abrupt braking, reduce vehicle speed, pull off the road to a safe location and stop the vehicle as soon as possible. Serious vehicle damage could occur and may lead to an accident and could result in serious personal injury. Check the tire pressure for all four tires. Adjust the tire pressure to the recommended COLD tire pressure shown on the Tire and Loading Information label to turn the low tire pressure warning light OFF. If you have a flat tire, replace it with a spare tire as soon as possible. (See "Flat**

tire" in the "6. In case of emergency" section for changing a flat tire.)

- **When a spare tire is mounted or a wheel is replaced, the TPMS will not function and the low tire pressure warning light will flash for approximately 1 minute. The light will remain on after the 1 minute. Contact your NISSAN dealer as soon as possible for tire replacement and/or system resetting.**
- **Replacing tires with those not originally specified by NISSAN could affect the proper operation of the TPMS.**
- **Do not inject any tire liquid or aerosol tire sealant into the tires, as this may cause a malfunction of the tire pressure sensors.**

CAUTION

Do not place metalized film or any metal parts (antenna, etc.) on the windows. This may cause poor reception of the signals from the tire pressure sensors, and the TPMS will not function properly.

Some devices and transmitters may temporarily interfere with the operation of the TPMS and cause the low tire pressure warning light to illuminate. Some examples are:

- Facilities or electric devices using similar radio frequencies are near the vehicle.
- If a transmitter set to similar frequencies is being used in or near the vehicle.
- If a computer (or similar equipment) or a DC/AC converter is being used in or near the vehicle.

FCC Notice:

Changes or modifications not expressly approved by the party responsible for compliance could void the user's authority to operate the equipment.

This device complies with Part 15 of the FCC Rules and RSS-210 of Industry Canada.

Operation is subject to the following two conditions: (1) This device may not cause harmful interference, and (2) this device must accept any interference received, including interference that may cause undesired operation of the device.

AVOIDING COLLISION AND ROLLOVER

WARNING

Failure to operate this vehicle in a safe and prudent manner may result in loss of control or an accident.

Be alert and drive defensively at all times. Obey all traffic regulations. Avoid excessive speed, high speed cornering, or sudden steering maneuvers, because these driving practices could cause you to lose control of your vehicle. **As with any vehicle, a loss of control could result in a collision with other vehicles or objects, or cause the vehicle to rollover, particularly if the loss of control causes the vehicle to slide sideways.** Be attentive at all times, and avoid driving when tired. Never drive when under the influence of alcohol or drugs (including prescription or over-the-counter drugs which may cause drowsiness). Always wear your seat belt as outlined in the "1. Safety — Seats, seat belts and supplemental restraint

system" section and also instruct your passengers to do so.

Seat belts help reduce the risk of injury in collisions and rollovers. **In a rollover crash, an unbelted or improperly belted person is significantly more likely to be injured or killed than a person properly wearing a seat belt.**

DRINKING ALCOHOL/DRUGS AND DRIVING

WARNING

Never drive under the influence of alcohol or drugs. Alcohol in the bloodstream reduces coordination, delays reaction time and impairs judgement. Driving after drinking alcohol increases the likelihood of being involved in an accident injuring yourself and others. Additionally, if you are injured in an accident, alcohol can increase the severity of the injury.

NISSAN is committed to safe driving. You must not drive under the influence of alcohol. Every year thousands of people are injured or killed in alcohol related accidents. Although the local laws vary on what is considered to be legally intoxicated, the fact is that alcohol affects all people differently and most people underestimate the effects of alcohol.

Remember, drinking and driving don't mix! And that is true for drugs, too (over the counter, prescription, and illegal drugs). Don't drive if your ability to operate your vehicle is impaired by alcohol, drugs, or some other physical condition.

WARNING

Never remove or turn the key to the LOCK position while driving. The steering wheel will lock. This may cause the driver to lose control of the vehicle and could result in serious vehicle damage or personal injury.

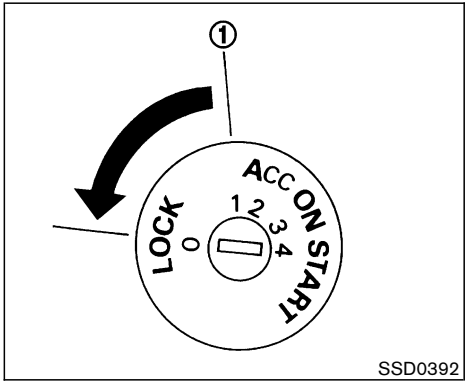

AUTOMATIC TRANSMISSION

The ignition lock is designed so the key cannot be turned to the LOCK position and removed until the selector lever is moved to the P (Park) position.

When removing the key from the ignition switch, make sure the selector lever is in the P (Park) position.

If the selector lever is not returned to the P (Park) position, the key cannot be moved to the LOCK position.

When the key cannot be turned to the LOCK position, proceed as follows to remove the key:

1. Move the selector lever into the P (Park) position.
2. Turn the ignition key slightly toward the ON direction.
3. Turn the key to the LOCK position.
4. Remove the key.

If the key is removed from the ignition switch, the selector lever cannot be moved from P (Park) position. **The selector lever can be moved if the ignition switch is in the ON position and the foot brake pedal is depressed.**

There is an OFF position (1) in between the LOCK and ACC positions. The OFF position is indicated by a “1” on the key cylinder. When the ignition switch is in the OFF position, the steering wheel is not locked.

In order for the steering wheel to be locked, it must be turned about 1/6 of a turn counterclockwise from the straight up position.

To lock the steering wheel, turn the key to the LOCK position. Remove the key. To unlock the steering wheel, insert the key and turn it gently while rotating the steering wheel slightly right and left.

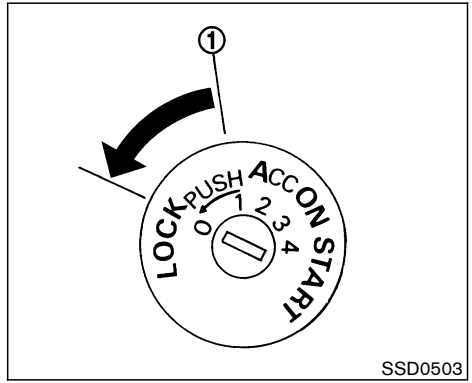

MANUAL TRANSMISSION

The ignition switch includes a device that helps prevent accidental removal of the key while driving.

The key can only be removed when the ignition switch is in the LOCK position.

To turn the ignition switch to the LOCK position from the ACC or ON position, turn the key to the OFF position, push the key in, then turn the key to the LOCK position.

There is an OFF position (1) in between the LOCK and ACC positions. The OFF position is indicated by a “1” on the key cylinder.

In order for the steering wheel to be locked, it must be turned about 1/6 of a turn clockwise from the straight up position.

To lock the steering wheel, turn the key to the LOCK position. Remove the key. To unlock the steering wheel, insert the key and turn it gently while rotating the steering wheel slightly right and left.

KEY POSITIONS

The switch includes an anti-theft steering lock device.

LOCK (Normal parking position) (0)

The ignition key can only be removed when the switch is in this position.

OFF (1)

The engine can be turned off without locking the steering wheel.

The ignition lock is designed so that the key cannot be turned to LOCK and removed until the selector lever is moved to the P (Park) position.

ACC (Accessories) (2)

This position activates electrical accessories such as the radio when the engine is not running.

ON (Normal operating position) (3)

This position turns on the ignition system and the electrical accessories.

START (4)

This position activates the starter motor, starting the engine.

NISSAN VEHICLE IMMOBILIZER SYSTEM

The NISSAN Vehicle Immobilizer System will not allow the engine to start without the use of the registered key.

If the engine fails to start using a registered key (for example, when interference is caused by another registered key, an automated toll road device or automated payment device on the key ring), restart the engine using the following procedures:

1. Leave the ignition switch in the ON position for approximately 5 seconds.
2. Turn the ignition switch to the OFF or LOCK position and wait approximately 10 seconds.
3. Repeat steps 1 and 2.
4. Restart the engine while holding the device (which may have caused the interference) separate from the registered key.

If this procedure allows the engine to start, NISSAN recommends placing the registered key on a separate key ring to avoid interference from other devices.

BEFORE STARTING THE ENGINE

- Make sure the area around the vehicle is clear.
- Maintenance items should be checked periodically, for example, each time you check engine oil.
- Check that all windows and lights are clean.
- Visually inspect tires for their appearance and condition. Also check tires for proper inflation.
- Lock all doors.
- Position seat and adjust head restraints.
- Adjust inside and outside mirrors.
- Fasten seat belts and ask all passengers to do likewise.
- Check the operation of warning lights when the ignition key is turned to the ON position. See "Warning/indicator lights and audible reminders" in the "2. Instruments and controls" section.

STARTING THE ENGINE

1. Apply the parking brake.
2. **Automatic transmission:**

   Move the selector lever to P (Park) or N (Neutral). (P preferred.)

   The starter is designed not to operate if the selector lever is in one of the driving positions.

   Manual transmission:

   Move the shift lever to N (Neutral) position, and depress the clutch pedal to the floor while cranking the engine.

   The starter is designed not to operate unless the clutch pedal is fully depressed.
3. Crank the engine **with your foot off the accelerator pedal** by turning the ignition key to START. Release the key when the engine starts. If the engine starts, but fails to run, repeat the above procedure.

- If the engine is very hard to start in extremely cold weather or when restarting, depress the accelerator pedal a little (approximately 1/3 to the floor) and hold it then crank the engine. Release the key and the accelerator pedal when the engine starts.
- If the engine is very hard to start because it is flooded, depress the accelerator pedal all the way to the floor and hold it. Crank the engine for 5 to 6 seconds. After cranking the engine, release the accelerator pedal. Crank the engine **with your foot off the accelerator pedal** by turning the ignition key to START. Release the key when the engine starts. If the engine starts, but fails to run, repeat the above procedure.

CAUTION

Do not operate the starter for more than 15 seconds at a time. If the engine does not start, turn the key off and wait 10 seconds before cranking again, otherwise the starter could be damaged.

4. **Warm-up**

   Allow the engine to idle for at least 30 seconds after starting. Do not race the engine while warming it up. Drive at moderate speed for a short distance first, especially in cold weather.

   In cold weather, keep the engine running for a minimum of 2 to 3 minutes before shutting it off. Starting and stopping the engine over a short period of time may make the vehicle more difficult to start.

AUTOMATIC TRANSMISSION

5-speed automatic transmission

The automatic transmission in your vehicle is electronically controlled by a transmission control module to produce maximum power and smooth operation.

Shown on the following pages are the recommended operating procedures for this transmission. Follow these procedures for maximum vehicle performance and driving enjoyment.

Starting the vehicle

After starting the engine, fully depress the foot brake pedal and push the selector lever button before shifting the selector lever to the R (Reverse), N (Neutral), D (Drive) or Manual shift mode position. Be sure the vehicle is fully stopped before shifting the selector lever.

This automatic transmission model is designed so that the foot brake pedal must be depressed before shifting from P (Park) to any drive position while the ignition switch is ON.

The selector lever cannot be moved out of P (Park) position and into any of the other gear positions if the ignition key is turned to the LOCK, OFF or ACC position or if the key is removed from the ignition switch.

1. Keep the foot brake pedal depressed and push the selector lever button to shift into a driving gear.
2. Release the parking brake and foot brake, then gradually start the vehicle in motion.

WARNING

- **Do not depress the accelerator pedal while shifting from P (Park) or N (Neutral) to R (Reverse), D (Drive) or manual shift mode. Always depress the brake pedal until shifting is completed. Failure to do so could cause you to lose control and have an accident.**
- **Cold engine idle speed is high, so use caution when shifting into a forward or reverse gear before the engine has warmed up.**
- **On slippery roads, do not downshift. This may cause a loss of control.**
- **Never shift to P (Park) or R (Reverse) while the vehicle is moving forward.**

Never shift to P (Park) or D (Drive) while vehicle is moving backward. These could cause an accident.

CAUTION

When stopping the vehicle on an uphill grade, do not hold the vehicle by depressing the accelerator pedal. The foot brake should be used for this purpose.

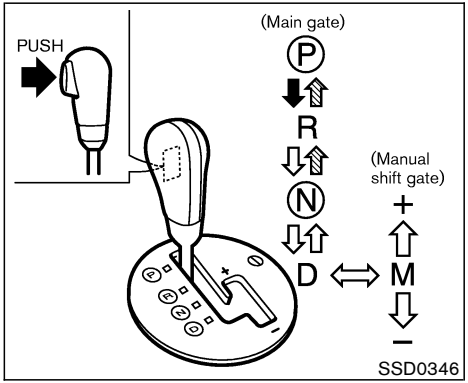

To move the selector lever,

➡ : Push the button while depressing the brake pedal,
⇨ : Push the button,
⇨ : Just move the selector lever.

Shifting

After starting the engine, fully depress the brake pedal and shift the selector lever from P (Park) to R (Reverse), N (Neutral), D (Drive), or Manual shift mode position.

Push the button to shift into P (Park) or R (Reverse). All other positions can be selected without pushing the button.

⚠ WARNING

Apply the parking brake if the selector lever is in any position while the engine is not running. Failure to do so could cause the vehicle to move unexpectedly or roll away and result in serious personal injury or property damage.

If the key is turned to OFF or ACC for any reason while the vehicle is in R (Reverse), N (Neutral), or any D (Drive) position, the key cannot be turned to LOCK and be removed from the ignition switch. Move the selector lever to the P (Park) position, then the key can be turned to LOCK.

P (Park):

Use this selector position when the vehicle is parked or when starting the engine. Make sure the vehicle is completely stopped. **The brake pedal must be depressed and the selector lever button pushed in to move the selector lever from N (Neutral) or any drive position to P (Park).** Apply the parking brake. When parking on a hill, first depress the foot brake pedal, apply the parking brake, then shift into the P (Park) position.

⚠ CAUTION

Use this position only when the vehicle is completely stopped.

R (Reverse):

Use this position to back up. Always be sure the vehicle is completely stopped before selecting R (Reverse). **The brake pedal must be depressed and the selector lever button pushed in to move the selector lever from P (Park), N (Neutral) or any drive position to R (Reverse).**

N (Neutral):

Neither forward nor reverse gear is engaged. The engine can be started in this position. You may shift to N (Neutral) and restart a stalled engine while the vehicle is moving.

D (Drive):

Use this position for all normal forward driving.

Manual shift mode

When the selector lever is shifted from D to the manual shift gate with the vehicle stopped or while driving, the transmission enters the manual

shift mode. Shift range can be selected manually.

In the manual shift mode, the shift range is displayed on the position indicator in the meter.

Shift ranges up or down one by one as follows:

$_M1 \rightleftarrows {}_M2 \rightleftarrows {}_M3 \rightleftarrows {}_M4 \rightleftarrows {}_M5$

$_M5$ (5th):

Use this position for all normal forward driving.

$_M4$ (4th):

Use this position when driving up long slopes, or for engine braking when driving down long slopes.

$_M3$ (3rd) and $_M2$ (2nd):

Use for hill climbing or engine braking on downhill grades.

$_M1$ (1st):

Use this position when climbing steep hills slowly or driving slowly through deep snow, sand or mud, or for maximum engine braking on steep downhill grades.

- Remember not to drive at high speeds for extended periods of time in lower than $_M4$ range. This reduces fuel economy.
- When shifting up, move the selector lever to the + (up) side. (Shifts to higher range.)
- When shifting down, move the selector lever to the – (down) side. (Shifts to lower range.)
- Moving the selector lever to the same side twice will shift the ranges in succession. However, if this motion is rapidly done, the second shifting may not be completed properly.
- **In the manual shift mode, the transmission automatically shifts down to 1st gear before the vehicle comes to a stop. When accelerating again, it is necessary to shift up to the desired range.**
- When canceling the manual shift mode, return the selector lever to the D position. The transmission returns to the normal driving mode.
- **In the manual shift mode, the transmission may not shift to the selected gear. This helps maintain driving performance and reduces the chance of vehicle damage or loss of control.**

Accelerator downshift — In D position —

For passing or hill climbing, fully depress the accelerator pedal to the floor. This shifts the transmission down into the lower gear, depending on the vehicle speed.

Fail-safe

When fail-safe operation occurs, the automatic transmission will be locked in 4th gear.

If the vehicle is driven under extreme conditions, such as excessive wheel spinning and subsequent hard braking, the fail-safe system may be activated. This will occur even if all electrical circuits are functioning properly. In this case, turn the ignition key OFF and wait for 3 seconds. Then turn the key back to the ON position. The vehicle should return to its normal operating condition. If it does not return to its normal operating condition, have a NISSAN dealer check the transmission and repair if necessary.

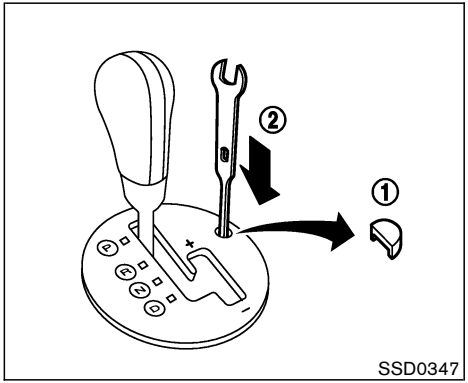

Shift lock release

If the battery charge is low or discharged, the select lever may not be moved from the P (Park) position even with the brake pedal depressed.

To move the selector lever, depress the brake pedal, apply the parking brake, and push the shift lock release button by using a suitable tool as shown. Push the selector lever button, then the selector lever can be moved to N (Neutral). This allows the vehicle to be moved if the battery is discharged.

If the lever cannot be moved out of P (Park), have a NISSAN dealer check the automatic transmission system as soon as possible.

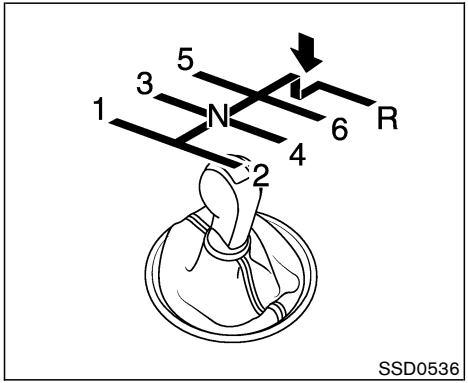

MANUAL TRANSMISSION

Shifting

To change gears, or when upshifting or downshifting, fully depress the clutch pedal, shift into the appropriate gear then slowly and smoothly release the clutch.

This vehicle is equipped with a short throw shifter manual transmission. To ensure smooth gear changes, fully depress the clutch pedal before operating the shift lever. If the clutch pedal is not fully depressed before the transmission is shifted, a gear noise may be heard. Transmission damage could occur.

Start the vehicle in 1st gear and shift to 2nd, 3rd, 4th and 5th up to 6th gear in sequence according to the vehicle speed.

To back up, depress the shift lever and then move it to the R (Reverse) position after stopping the vehicle completely.

If it is difficult to move the shift lever into R (Reverse) or 1 (Low gear), shift to N (Neutral), then release the clutch pedal. Fully depress the clutch pedal again and shift into R or 1.

WARNING

- **Do not downshift abruptly on slippery roads. This may cause a loss of control.**
- **Do not over-rev the engine when shifting to a lower gear. This may cause a loss of control or engine damage.**

CAUTION

- **Do not rest your foot on the clutch pedal while driving. This may damage the clutch.**

- **Fully depress the clutch pedal before shifting to help prevent transmission damage.**
- **Stop your vehicle completely before shifting into R (Reverse).**
- **When the vehicle is stopped with the engine running (for example, at a stop light), shift to N (Neutral) and release the clutch pedal with the foot brake applied.**

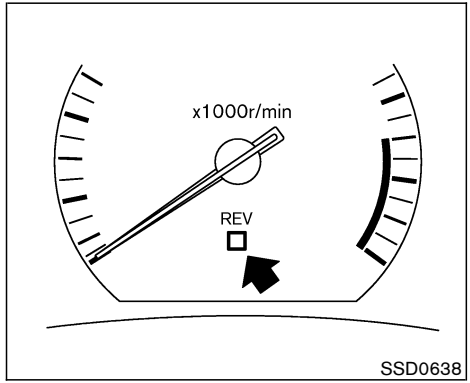

Up-shift indicator

The manual transmission up-shift indicator is located in the tachometer and shows the driver the timing to shift into a higher gear by illuminating. The use of the up-shift indicator will help you to upshift at a constant engine speed (rpm) from any gear.

The up-shift indicator will start flashing when the engine speed is within about 500 rpm of the set figure while driving, and then illuminate after the engine speed reaches the set figure.

The engine speed in revolutions per minute (rpm) for upshifting can be set on the trip computer display. See “Trip computer” in the “2. Instruments and controls” section for the display setting information.

Use the up-shift indicator when driving as follows:

- If the maximum engine speed is desired, set the figure at 7,500 rpm. (The indicator starts flashing from about 7,000 rpm and comes on steady at 7,500 rpm.)
- If the maximum engine torque is desired, set the figure at 4,800 rpm. (The indicator starts flashing from about 4,300 rpm and comes on steady at 4,800 rpm.)
- If you want to break in your vehicle, use of the up-shift indicator with a rather low figure will help you to avoid the high engine speed.

To make the up-shift indicator not come on, set the figure at above 8,100 rpm.

There may be a slight difference between the timing of the up-shift indicator illumination and the tachometer indication.

Suggested up-shift speeds

Shown below are suggested vehicle speeds for shifting into a higher gear. These suggestions relate to fuel economy and vehicle performance. Actual up-shift speeds will vary according to road conditions, the weather and individual driving habits.

For normal acceleration in low altitude areas [less than 4,000 ft (1,219 m)]:

Gear change	MPH (km/h)
1st to 2nd	8 (13)
2nd to 3rd	16 (26)
3rd to 4th	25 (40)
4th to 5th	28 (45)
5th to 6th	33 (53)

For quick acceleration in low altitude areas or in high altitude areas [over 4,000 ft (1,219 m)]:

Gear change	MPH (km/h)
1st to 2nd	15 (24)
2nd to 3rd	25 (40)
3rd to 4th	40 (64)
4th to 5th	45 (72)
5th to 6th	50 (80)

Suggested maximum speed in each gear

Downshift to a lower gear if the engine is not running smoothly, or if you need to accelerate.

Do not exceed the maximum suggested speed (shown below) in any gear. For level road driving, use the highest gear suggested for that speed. Always observe posted speed limits, and drive according to the road conditions, which will ensure safe operation. Do not over-rev the engine when shifting to a lower gear as it may cause engine damage or loss of vehicle control.

Gear	MPH (km/h)
1st	40 (65)
2nd	66 (106)
3rd	95 (152)
4th	—
5th	—
6th	—

PARKING BRAKE

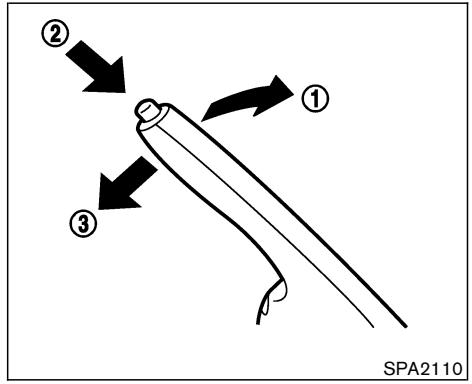

To apply: pull the parking brake lever up (1).

To release:

1. Firmly apply the foot brake.
2. **Automatic transmission models:**

   Move the selector lever to the P (Park) position.

   Manual transmission models:

   Place the shift lever in the N (Neutral) position.
3. While pulling up on the parking brake lever slightly, push the button (2) and lower the lever completely (3).

4. Before driving, be sure the brake warning light goes out.

WARNING

- **Be sure the parking brake is fully released before driving. Failure to do so can cause brake failure and lead to an accident.**
- **Do not release the parking brake from outside the vehicle.**
- **Do not use the gear shift in place of the parking brake. When parking, be sure the parking brake is fully engaged.**
- **Do not leave children unattended in a vehicle. They could release the parking brake and cause an accident.**

CRUISE CONTROL (if so equipped)

WARNING

Do not use the cruise control when driving under the following conditions:

- **When it is not possible to keep the vehicle at a set speed.**
- **In heavy traffic or in traffic that varies in speed.**
- **On winding or hilly roads.**
- **On slippery roads (rain, snow, ice, etc.).**
- **In very windy areas.**

Doing so could cause a loss of vehicle control and result in an accident.

CAUTION

On manual transmission models, do not shift into N (Neutral) without depressing the clutch pedal when the cruise control is set. Should this occur, depress the clutch pedal and turn the main switch off immediately. Failure to do so may cause engine damage.

PRECAUTIONS ON CRUISE CONTROL

- If the cruise control system malfunctions, it cancels automatically. The SET indicator light on the meter panel then blinks to warn the driver.
- If the engine coolant temperature becomes excessively high, the cruise control system will be canceled automatically.
- If the SET indicator light blinks, turn the cruise control MAIN (ON·OFF) switch off and have the system checked by a NISSAN dealer.
- The SET indicator light may blink when the cruise control MAIN switch is turned on while pushing the RES/ACCEL, COAST/SET, or CANCEL switch. To properly set the cruise control system, perform the preceding steps in the order indicated.

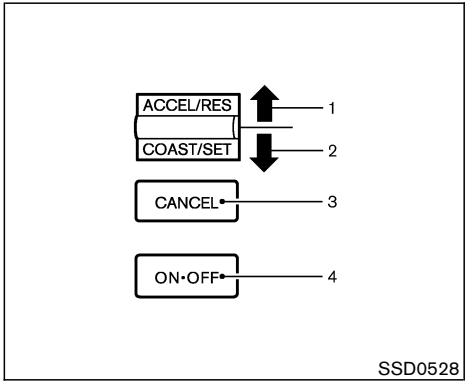

1. ACCEL or RESUME switch
2. COAST or SET switch
3. CANCEL switch
4. MAIN (ON·OFF) switch

CRUISE CONTROL OPERATIONS

The cruise control allows driving at a speed between 25 to 89 MPH (40 to 144 km/h) without keeping your foot on the accelerator pedal.

To turn on the cruise control, push the MAIN switch on. The CRUISE indicator light on the meter panel will come on.

To set cruising speed, accelerate the vehicle to the desired speed, push the COAST/SET switch and release it. (The SET indicator light will come on.) Take your foot off the accelerator pedal. Your vehicle will maintain the set speed.

- **To pass another vehicle,** depress the accelerator pedal. When you release the pedal, the vehicle will return to the previously set speed.
- The vehicle may not maintain the set speed when going up or down steep hills. If this happens, drive without the cruise control.

To cancel the preset speed, use one of the following three methods:

a) Push the CANCEL switch; The SET indicator light will go out.

b) Tap the brake pedal; The SET indicator light will go out.

c) Turn the MAIN switch off. Both the CRUISE indicator and SET indicator lights will go out.

- If you depress the brake pedal while pushing the ACCEL/RES set switch and reset at the cruising speed, turn the MAIN switch off once and then turn it on again.
- The cruise control will automatically be cancelled if the vehicle slows down more than approximately 8 MPH (13 km/h) below the set speed.
- If you depress the clutch pedal (manual transmission) or move the selector lever to N (Neutral) position (automatic transmission), the cruise control will be canceled.

To reset at a faster cruising speed, use one of the following three methods:

a) Depress the accelerator pedal. When the vehicle attains the desired speed, push and release the COAST/SET switch.

b) Push and hold the ACCEL/RES set switch. When the vehicle attains the speed you desire, release the switch.

c) Push, then quickly release the ACCEL/RES set switch. Each time you do this, the set speed will increase by about 1 MPH (1.6 km/h).

To reset at a slower cruising speed, use one of the following three methods:

a) Lightly tap the brake pedal. When the vehicle attains the desired speed, push the COAST/SET switch and release it.

b) Push and hold the COAST/SET switch. Release the switch when the vehicle slows down to the desired speed.

c) Push, then quickly release the COAST/SET switch. Each time you do this, the set speed will decrease by about 1 MPH (1.6 km/h).

To resume the preset speed, push and release the ACCEL/RES set switch. The vehicle will resume the last set cruising speed when the vehicle speed is over 25 MPH (40 km/h).

BREAK-IN SCHEDULE

CAUTION

During the first 1,200 miles (2,000 km), follow these recommendations to obtain maximum engine performance and ensure the future reliability and economy of your new vehicle. Failure to follow these recommendations may result in shortened engine life and reduced engine performance.

- Avoid driving for long periods at constant speed, either fast or slow. Do not run the engine over 4,000 rpm.
- Do not accelerate at full throttle in any gear.
- Avoid quick starts.
- Avoid hard braking as much as possible.
- Do not tow a trailer for the first 500 miles (800 km).

INCREASING FUEL ECONOMY

- Accelerate slowly and smoothly. Maintain cruising speeds with a constant accelerator position.
- Drive at moderate speeds on the highway. Driving at high speed will lower fuel economy.
- Avoid unnecessary stopping and braking. Maintain a safe distance behind other vehicles.
- Use a proper gear range which suits road conditions. On level roads, shift into high gear as soon as possible.
- Avoid unnecessary engine idling.
- Keep your engine tuned up.
- Follow the recommended periodic maintenance schedule.
- Keep the tires inflated to the correct pressure. Low tire pressure will increase tire wear and lower fuel economy.
- Keep the front wheels in correct alignment. Improper alignment will increase tire wear and lower fuel economy.
- Air conditioner operation lowers fuel economy. Use the air conditioner only when necessary.
- When cruising at highway speeds, it is more economical to use the air conditioner and

leave the windows closed to reduce drag.

- Use the recommended viscosity engine oil. See “Engine oil and oil filter recommendation” in the “9. Technical and consumer information” section.

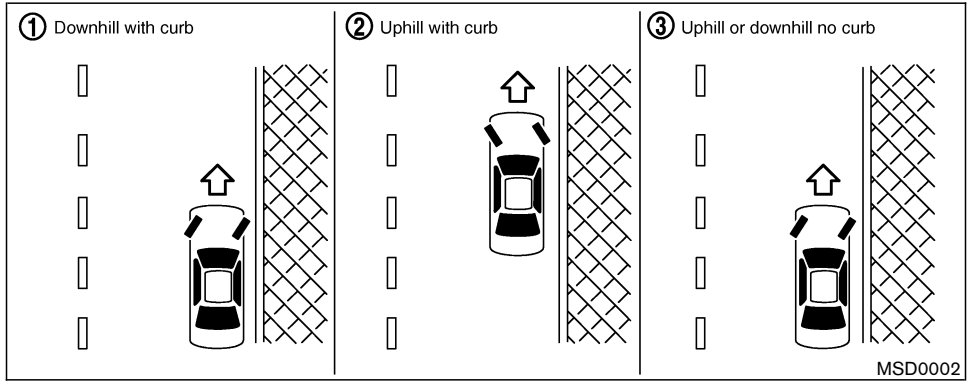

WARNING

- **Do not stop or park the vehicle over flammable materials such as dry grass, waste paper or rags. They may ignite and cause a fire.**
- **Never leave the engine running while the vehicle is unattended.**
- **Do not leave children unattended inside the vehicle.**

1. Firmly apply the parking brake.
2. **Automatic transmission models:**

   Move the selector lever to the P (Park) position.

   Manual transmission models:

   Place the shift lever in the R (Reverse) position. When parking on an uphill grade, place the shift lever in the 1 (Low gear) position.

WARNING

- **Safe parking procedures require that both the parking brake be set and the transmission placed into P (Park) for automatic transmission models or in an appropriate gear for manual transmission models. Failure to do so could cause the vehicle to move unexpectedly or roll away and result in an accident.**
- **Make sure the automatic transmission selector lever has been pushed as far forward as it can go and cannot be moved without depressing the button at the end of the lever.**

3. To help prevent the vehicle from rolling into the street when parked on a sloping drive way, it is a good practice to turn the wheels as illustrated.

- HEADED DOWNHILL WITH CURB: ①

  Turn the wheels into the curb and move the vehicle forward until the curb side wheel gently touches the curb.

- HEADED UPHILL WITH CURB: ②

  Turn the wheels away from the curb and move the vehicle back until the curb side wheel gently touches the curb.

- HEADED UPHILL OR DOWNHILL, NO CURB: ③

  Turn the wheels toward the side of the road so the vehicle will move away from the center of the road if it moves.

4. Turn the ignition key to the LOCK position and remove the key.

POWER STEERING

The power assisted steering uses a hydraulic pump, driven by the engine, to assist steering.

If the engine stops or drive belt breaks, you will still have control of the vehicle. However, much greater steering effort is needed, especially in sharp turns or at low speeds.

WARNING

If the engine is not running or is turned off while driving, the power assist for the steering will not work. Steering will be much harder to operate.

BRAKING PRECAUTIONS

The brake system has two separate hydraulic circuits. If one circuit malfunctions, you will still have braking at two wheels.

Vacuum assisted brakes

The brake booster aids braking by using engine vacuum. If the engine stops, you can stop the vehicle by depressing the brake pedal. However, greater foot pressure on the brake pedal will be required to stop the vehicle and the stopping distance will be longer.

Using the brakes

Avoid resting your foot on the brake pedal while driving. This overheats the brakes, increases wear on the brakes and pads, and reduces gas mileage.

To help save the brakes and to prevent the brakes from overheating, reduce speed and downshift to a lower gear before going down a slope or long grade. Overheated brakes may reduce braking performance and could result in loss of vehicle control.

WARNING

- **While driving on a slippery surface, be careful when braking, accelerating or downshifting. Abrupt braking or accelerating could cause the wheels to skid and result in an accident.**
- **If the engine is not running or is turned off while driving, the power assist for the brakes will not work. Braking will be harder.**

Wet brakes

When the vehicle is washed or driven through water, the brakes may get wet. As a result, your braking distance will be longer and the vehicle may pull to one side during braking.

To dry brakes, drive the vehicle at a safe speed while lightly pressing the brake pedal to heat-up the brakes. Do this until the brakes return to normal. Avoid driving the vehicle at high speeds until the brakes function correctly.

Parking brake break-in

Break in the parking brake shoes whenever the stopping effect of the parking brake is weakened or whenever the parking brake shoes and/or drums/rotors are replaced, in order to assure the best braking performance.

This procedure is described in the vehicle service manual and can be performed by a NISSAN dealer.

ANTI-LOCK BRAKING SYSTEM (ABS)

WARNING

- **The Anti-lock Braking System (ABS) is a sophisticated device, but it cannot prevent accidents resulting from careless or dangerous driving techniques. It can help maintain vehicle control during braking on slippery surfaces. Remember that stopping distances on slippery surfaces will be longer than on normal surfaces even with ABS. Stopping distances may also be longer on rough, gravel or snow covered roads, or if you are using tire chains. Always maintain a safe distance from the vehicle in**

front of you. Ultimately, the driver is responsible for safety.

- **Tire type and condition may also affect braking effectiveness.**

— **When replacing tires, install the specified size of tires on all four wheels.**

— **When installing a spare tire, make sure that it is the proper size and type as specified on the Tire and Loading Information label. See "Tire and Loading Information label" in the "9. Technical and consumer information" section of this manual.**

— **For detailed information, see "Wheels and tires" in the "8. Maintenance and do-it-yourself" section of this manual.**

The Anti-lock Braking System (ABS) controls the brakes so the wheels do not lock during hard braking or when braking on slippery surfaces. The system detects the rotation speed at each wheel and varies the brake fluid pressure to prevent each wheel from locking and sliding. By preventing each wheel from locking, the system helps the driver maintain steering control and helps to minimize swerving and spinning on slippery surfaces.

Using the system

Depress the brake pedal and hold it down. Depress the brake pedal with firm steady pressure, but do not pump the brakes. The ABS will operate to prevent the wheels from locking up. Steer the vehicle to avoid obstacles.

WARNING

Do not pump the brake pedal. Doing so may result in increased stopping distances.

Self-test feature

The ABS includes electronic sensors, electric pumps, hydraulic solenoids and a computer. The computer has a built-in diagnostic feature that tests the system each time you start the engine and move the vehicle at a low speed in forward or reverse. When the self-test occurs, you may hear a "clunk" noise and/or feel a pulsation in the brake pedal. This is normal and does not indicate a malfunction. If the computer senses a malfunction, it switches the ABS off and illuminates the ABS warning light on the instrument panel. The brake system then operates normally, but without anti-lock assistance.

If the ABS warning light illuminates during the self-test or while driving, have the vehicle checked by a NISSAN dealer.

Normal operation

The ABS operates at speeds above 3 to 6 MPH (5 to 10 km/h). The speed varies according to road conditions.

When the ABS senses that one or more wheels are close to locking up, the actuator rapidly applies and releases hydraulic pressure. This action is similar to pumping the brakes very quickly. You may feel a pulsation in the brake pedal and hear a noise from under the hood or feel a vibration from the actuator when it is operating. This is normal and indicates that the ABS is operating properly. However, the pulsation may indicate that road conditions are hazardous and extra care is required while driving.

TRACTION CONTROL SYSTEM (TCS) (if so equipped)

On slippery surfaces such as wet asphalt roads, vehicle wheels may spin when the vehicle is accelerated. This wheel spin reduces acceleration, or causes the vehicle to swerve, thus decreasing vehicle stability.

When the vehicle drive wheels begin to spin, the Traction Control System (TCS) controls the engine torque using an electronic control system, and it also controls automatic control shifting if necessary (for automatic transmission models). This reduces spinning of the drive wheels, and result in improved vehicle acceleration performance. It also improves the vehicle stability by swerving motion.

- When the TCS is operating, the “SLIP” indicator light in the meter panel blinks.
- If the “SLIP” indicator light blinks, the vehicle is under slippery conditions. Be sure to drive carefully. See “Slip indicator light” and “Traction Control System (TCS) off indicator light” in the “2. Instruments and controls” section.
- Indicator light
  If a malfunction occurs in the TCS, the “SLIP” and “TCS OFF” indicator lights come on in the instrument panel. As long as these indicator lights are illuminated, the traction control function (except the ABS) is canceled. The vehicle will behaves like a model without the TCS.

WARNING

The traction control system is designed to prevent the wheels from spinning. However, it does not prevent vehicle slipping or spinning due to abrupt steering operation at high speeds or by careless or dangerous driving techniques. Be especially careful when driving on slippery surfaces and always drive safely.

VEHICLE DYNAMIC CONTROL (VDC) SYSTEM (if so equipped)

When accelerating or driving on slippery surfaces, the tires may spin or slide. With the Vehicle Dynamic Control (VDC) system, sensors detect these movements and control the braking and engine output to help improve vehicle stability.

- When the VDC system is operating, the “SLIP” indicator in the instrument panel blinks.
- When only the Traction Control System (TCS) portion of the VDC system is operating, the “SLIP” indicator in the instrument panel blinks.
- If the “SLIP” indicator blinks, the road conditions are slippery. Be sure to adjust your speed and driving to these conditions. Be sure to drive carefully. See “Slip indicator light”, and “Vehicle Dynamic Control (VDC) OFF indicator light” in the “2. Instruments and controls” section.
- Indicator light
  If a malfunction occurs in the system, the “SLIP” and “VDC OFF” indicator lights illuminate in the instrument panel. As long as these indicators are illuminated, the VDC system function is canceled.

The VDC system uses an Active Brake Limited Slip (ABLS) system to improve vehicle traction.

The ABLS system works when one of the driving wheels is spinning on a slippery surface. The ABLS system brakes the spinning wheel, which distributes the driving power to the other driving wheel. If the vehicle is operated with the VDC system turned off, all VDC system functions and TCS functions will be turned off. The ABLS system and ABS will still operate with the VDC system off. When the ABLS system is activated, the "SLIP" indicator light will blink and you may hear a clunk noise and/or feel a pulsation in the brake pedal. This is normal and is not an indication of a malfunction.

While the VDC system is operating, you may feel a pulsation in the brake pedal and hear a noise or feel a vibration from under the hood. This is normal and indicates that the VDC system is working properly.

The VDC system computer has a built-in diagnostic feature that tests the system each time you start the engine and move the vehicle at a low speed forward or backward. When the self-test occurs, you may hear a clunk noise and/or feel a pulsation in the brake pedal. This is normal and is not an indication of a malfunction.

WARNING

- **The VDC system is designed to help improve driving stability but does not prevent accidents due to abrupt steering operation at high speeds or due to careless or dangerous driving techniques. Reduce vehicle speed and be especially careful when driving and cornering on slippery surfaces and always drive carefully.**
- **If engine related parts such as a muffler are not standard equipment or are extremely deteriorated, the "VDC OFF" indicator or "SLIP" indicator or both indicator lights may illuminate.**
- **Do not modify the vehicle's suspension. If suspension parts such as shock absorbers, struts, springs, stabilizer bars and bushings are not NISSAN-approved or are extremely deteriorated the VDC system may not operate properly. This could adversely affect vehicle handling performance, and the "VDC OFF" indicator or "SLIP" indicator or both indicator lights may illuminate.**
- **If brake related parts such as brake pads, rotors and calipers are not standard equipment or are extremely deteriorated, the "VDC OFF" indicator or "SLIP" indicator or both indicator lights may illuminate.**
- **When driving on extremely inclined surfaces such as higher banked corners, the VDC system may not operate properly and the "VDC OFF" indicator or "SLIP" indicator or both indicator lights may illuminate. Do not drive on these types of roads.**
- **When driving on an unstable surface such as a turntable, ferry, elevator or ramp, the "VDC OFF" indicator or "SLIP" indicator or both indicator lights may illuminate. This is not a malfunction. Restart the engine after driving onto a stable surface.**
- **If wheels or tires other than those recommended are used, the VDC sys-**

tem may not operate properly and the "VDC OFF" indicator or "SLIP" indicator or both indicator lights may illuminate.

- **The VDC system is not a substitute for winter tires or tire chains on a snow-covered road.**

FREEING A FROZEN DOOR LOCK

To prevent a door lock from freezing, apply deicer or glycerin to it through the key hole. If the lock becomes frozen, heat the key before inserting it into the key hole.

ANTI-FREEZE

In the winter when it is anticipated that the temperature will drop below 32°F (0°C), check anti-freeze to assure proper winter protection. For additional information, see "Engine Cooling System" in the "8. Maintenance and do-it-yourself" section.

BATTERY

If the battery is not fully charged during extremely cold weather conditions, the battery fluid may freeze and damage the battery. To maintain maximum efficiency, the battery should be checked regularly. For additional information, see "Battery" in the "8. Maintenance and do-it-yourself" section.

DRAINING OF COOLANT WATER

If the vehicle is to be left outside without anti-freeze, drain the cooling system by opening the drain plug located under the radiator. Refill before operating the vehicle. See "Engine cooling system" in the "8. Maintenance and do-it-yourself" section for changing engine coolant.

TIRE EQUIPMENT

1. SUMMER tires are of a tread design to provide superior performance on dry pavement. However, the performance of these tires will be substantially reduced in snowy and icy conditions. If you operate your vehicle on snowy or icy roads, NISSAN recommends the use of MUD & SNOW or ALL SEASON tires on all four wheels. Consult a NISSAN dealer for the tire type, size, speed rating and availability information.
2. For additional traction on icy roads, studded tires may be used. However, some provinces and states prohibit their use. Check local, state and provincial laws before installing studded tires.

   Skid and traction capabilities of studded snow tires, on wet or dry surfaces, may be poorer than that of non-studded snow tires.
3. Tire chains may be used. For details, see "Tire chains" in the "8. Maintenance and do-it-yourself" section of this manual.

SPECIAL WINTER EQUIPMENT

It is recommended that the following items be carried in the vehicle during winter:

- a scraper and stiff-bristled brush to remove ice and snow from the windows and wiper blades.
- a sturdy, flat board to be placed under the jack to give it firm support.
- a shovel to dig the vehicle out of snow-drifts.
- extra window washer fluid to refill the reservoir tank.

DRIVING ON SNOW OR ICE

WARNING

- **Wet ice (32°F, 0°C and freezing rain), very cold snow or ice can be slick and very hard to drive on. The vehicle will have much less traction or "grip" under these conditions. Try to avoid driving on wet ice until the road is salted or sanded.**
- **Whatever the condition, drive with caution. Accelerate and slow down with care. If accelerating or downshifting too fast, the drive wheels will lose even more traction.**
- **Allow more stopping distance under these conditions. Braking should be started sooner than on dry pavement.**
- **Allow greater following distances on slippery roads.**
- **Watch for slippery spots (glare ice). These may appear on an otherwise clear road in shaded areas. If a patch of ice is seen ahead, brake before reaching it. Try not to brake while on the ice, and avoid any sudden steering maneuvers.**
- **Do not use cruise control on slippery roads.**
- **Snow can trap dangerous exhaust gases under your vehicle. Keep snow clear of the exhaust pipe and from around your vehicle.**

ENGINE BLOCK HEATER (if so equipped)

Engine block heaters are available through NISSAN dealers to assist in cold temperature starting. The engine block heater should be used when the outside temperature is 20°F (−7°C) or lower.

To use the engine block heater:

1. Turn the engine off.
2. Open the hood and unwrap the engine block heater cord.
3. Plug the engine block heater cord into a grounded 3-wire, 3-pronged extension cord.
4. Plug the extension cord into a Ground Fault Interrupt (GFI) protected, grounded 110-volt AC (VAC) outlet.
5. The engine block heater must be plugged in for at least 2 - 4 hours, depending on outside temperatures, to properly warm the engine coolant. Use an appropriate timer to turn the engine block heater on.
6. Before starting the engine, unplug and properly store the cord to keep it away from moving parts.

WARNING

- **Do not use your engine block heater with an ungrounded electrical system or a 2-pronged adapter. You can be seriously injured by an electrical shock if you use an ungrounded connection.**
- **Disconnect and properly store the engine block heater cord before starting the engine. Damage to the cord could result in an electrical shock and can cause serious injury.**
- **Use a heavy-duty 3-wire, 3-pronged extension cord rated for at least 10 A. Plug the extension cord into a Ground Fault Interrupt (GFI) protected, grounded 110-VAC outlet. Failure to use the proper extension cord or a grounded outlet can result in a fire or electrical shock and cause serious personal injury.**

MEMO

6 In case of emergency

Flat tire 6-2
Tire pressure monitoring system (TPMS) 6-2
Changing a flat tire 6-2
Jump starting 6-7
Push starting 6-9
If your vehicle overheats 6-9
Towing your vehicle 6-10
Towing recommended by NISSAN 6-11
Vehicle recovery (Freeing a stuck vehicle) 6-12

TIRE PRESSURE MONITORING SYSTEM (TPMS)

This vehicle is equipped with the tire pressure monitoring system (TPMS). It monitors tire pressure of all tires except the spare. When the low tire pressure warning light is lit, one or more of your tires is significantly under-inflated. If the vehicle is being driven with low tire pressure, the TPMS will activate and warn you of it by the low tire pressure warning light (in the meter panel). This system will activate only when the vehicle is driven at speeds above 16 MPH (25 km/h). For more details, refer to "Warning/indicator lights and audible reminders" in the "2. Instruments and controls" section and "Tire pressure monitoring system (TPMS)" in the "5. Starting and driving" section.

WARNING

- **If the low tire pressure warning light illuminates while driving, avoid sudden steering maneuvers or abrupt braking, reduce vehicle speed, pull off the road to a safe location and stop the vehicle as soon as possible. Serious vehicle damage could occur and may lead to an accident and could result in serious personal injury. Check the tire pressure for all four tires. Adjust the tire pressure to the recommended COLD tire pressure shown on the Tire and Loading Information label to turn the low tire pressure warning light OFF. If you have a flat tire, replace it with a spare tire as soon as possible.**
- **When a spare tire is mounted or a wheel is replaced, the TPMS will not function and the low tire pressure warning light will flash for approximately 1 minute. The light will remain on after the 1 minute. Contact your NISSAN dealer as soon as possible for tire replacement and/or system resetting.**
- **Replacing tires with those not originally specified by NISSAN could affect the proper operation of the TPMS.**
- **Do not inject any tire liquid or aerosol tire sealant into the tires, as this may cause a malfunction of the tire pressure sensors.**

CHANGING A FLAT TIRE

If you have a flat tire, follow the instructions below.

Stopping the vehicle

1. Safely move the vehicle off the road away from traffic.
2. Turn on the hazard warning flashers.
3. Park on a level surface and apply the parking brake. Shift the manual transmission into R (Reverse) position (automatic transmission in P (Park) position).
4. Turn off the engine.
5. Raise the hood to warn other traffic, and to signal professional road assistance personnel that you need assistance.
6. Have all passengers get out of the vehicle and stand in a safe place, away from traffic and clear of the vehicle.

WARNING

- **Make sure the parking brake is securely applied and the manual transmission is shifted into R (Reverse), or the automatic transmission into P (Park).**
- **Never change tires when the vehicle is on a slope, ice or slippery areas. This is hazardous.**
- **Never change tires if oncoming traffic is close to your vehicle. Wait for professional road assistance.**

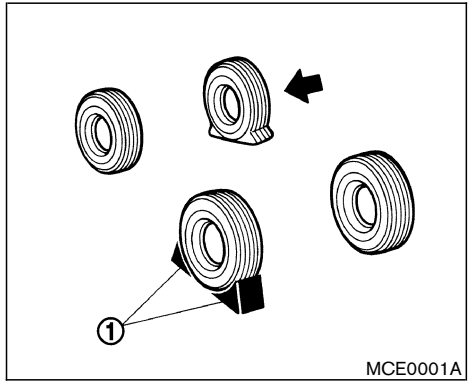

Blocking wheels

Place suitable blocks (1) at both the front and back of the wheel diagonally opposite the flat tire ⬅ to prevent the vehicle from moving when it is jacked up.

WARNING

Be sure to block the wheel as the vehicle may move and result in personal injury.

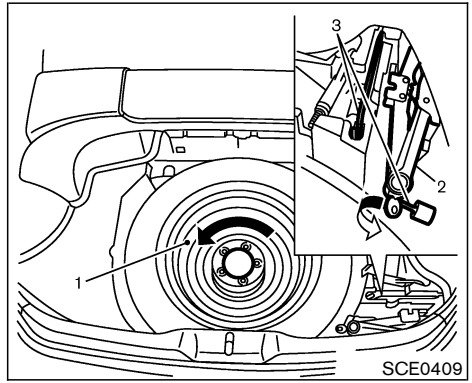

Coupe models

Getting the spare tire and tools

Remove jacking tools and spare tire from the storage area located in the luggage/trunk as illustrated.

Coupe models:

1. Spare tire — Turn the retainer counterclockwise to remove.
2. Jack — Turn it counterclockwise to remove.
3. Jacking tools

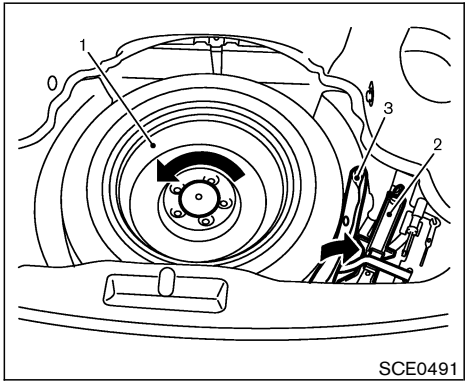

Roadster models

Roadster models:

1. Spare tire — Turn the retainer counterclockwise to remove.
2. Jack — Unfasten the belt and lift the jack up to remove.
3. Jacking tools — They are in the tool bag.

Jacking up the vehicle and removing the damaged tire

WARNING

- **Never get under the vehicle while it is supported only by the jack. If it is necessary to work under the vehicle, support it with safety stands.**
- **Use only the jack provided with your vehicle to lift the vehicle. Do not use the jack provided with your vehicle on other vehicles. The jack is designed for lifting only your vehicle during a tire change.**
- **Use the correct jack up points. Never use any other part of the vehicle for jack support.**
- **Never jack up the vehicle more than necessary.**
- **Never use blocks on or under the jack.**
- **Do not start or run the engine while vehicle is on the jack, as it may cause the vehicle to move. This is especially true for vehicles with limited slip differentials.**
- **Do not allow passengers to stay in the vehicle while it is on the jack.**

Carefully read the caution label attached to the jack body and the following instructions.

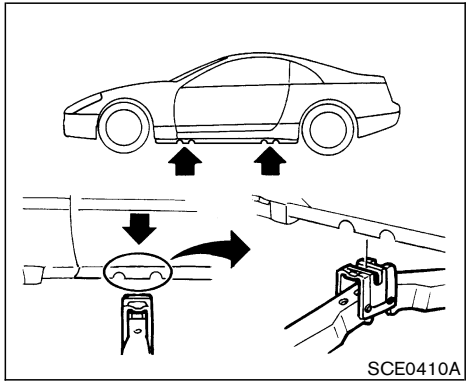

Jack-up point

1. Place the jack directly under the jack-up point as illustrated above so that top of the jack contacts the vehicle at the jack up point. Align the jack head between the two notches in the front or the rear as shown. Also fit the groove of the jack head between the notches as shown.

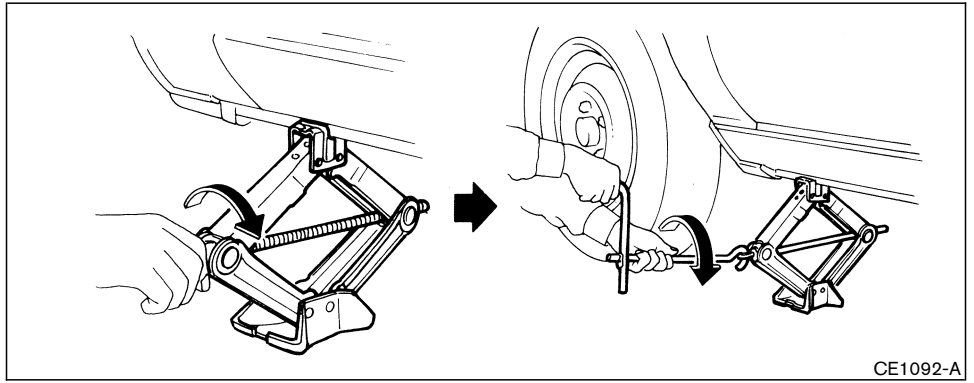

The jack should be used on level firm ground.

2. Loosen each wheel nut one or two turns by turning counterclockwise with the wheel nut wrench. **Do not remove the wheel nuts until the tire is off the ground.**
3. Carefully raise the vehicle until the tire clears the ground. To lift the vehicle, securely hold the jack lever and rod with both hands as shown above. Remove the wheel nuts, and then remove the tire.

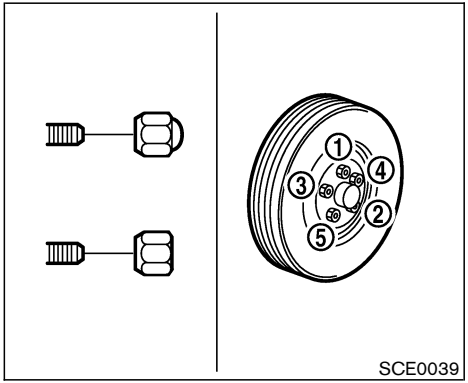

Installing the spare tire

The spare tire is designed for emergency use. See specific instructions under the heading "Wheels and tires" in the "8. Maintenance and do-it-yourself" section.

1. Clean any mud or dirt from the surface between the wheel and hub.
2. Carefully put the wheel on and tighten the wheel nuts finger tight. When replacing a front tire, make sure the hole in the spare tire wheel is aligned with the pin on the brake rotor.
3. With the wheel nut wrench, tighten wheel nuts alternately and evenly in the sequence illustrated (1 - 5) until they are tight.
4. Lower the vehicle slowly until the tire touches the ground. Then, with the wheel nut wrench, tighten the wheel nuts securely in the sequence as illustrated. Lower the vehicle completely.

WARNING

- **Incorrect wheel nuts or improperly tightened wheel nuts can cause the wheel to become loose or come off. This could cause an accident.**
- **Do not use oil or grease on the wheel studs or nuts. This could cause the nuts to become loose.**
- **Retighten the wheel nuts when the vehicle has been driven for 600 miles (1,000 km) (also in cases of a flat tire, etc.).**

As soon as possible tighten the wheel nuts to the specified torque with a torque wrench.

Wheel nut tightening torque:

80 ft-lb (108 N·m)

The wheel nuts must be kept tightened to specification at all times. It is recommended that wheel nuts be tightened to specification at each lubrication interval.

Adjust tire pressure to the COLD pressure.

COLD pressure:

After vehicle has been parked for three hours or more or driven less than 1 mile (1.6 km).

COLD tire pressures are shown on the Tire and Loading Information label affixed to the driver's side center pillar.

For models equipped with the tire pressure monitoring system (TPMS):

After adjusting tire pressure to the COLD tire pressure, the display of the tire pressure information may show higher pressure than the COLD tire pressure after the vehicle has been driven more than 1 mile (1.6 km). This is because the tire pressurizes as the tire temperature rises. This does not indicate a system malfunction.

Stowing the damaged tire and tools

Securely store the spare tire and jacking equipment in the vehicle.

JUMP STARTING

WARNING

- **Always make sure that the spare tire and jacking equipment are properly secured after use. Such items can become dangerous projectiles in an accident or sudden stop.**
- **The spare tire is designed for emergency use. See specific instructions under the heading "Wheels and tires" in the "8. Maintenance and do-it-yourself" section of this manual.**

To start your engine with a booster battery, the instructions and precautions below must be followed.

WARNING

- **If done incorrectly, jump starting can lead to a battery explosion, resulting in severe injury or death. It could also damage your vehicle.**
- **Explosive hydrogen gas is always present in the vicinity of the battery. Keep all sparks and flames away from the battery.**
- **Do not allow battery fluid to come into contact with eyes, skin, clothing or painted surfaces. Battery fluid is a corrosive sulfuric acid solution which can cause severe burns. If the fluid should come into contact with anything, immediately flush the contacted area with water.**
- **Keep battery out of the reach of children.**
- **The booster battery must be rated at 12 volts. Use of an improperly rated battery can damage your vehicle.**
- **Whenever working on or near a battery, always wear suitable eye protectors (for example, goggles or industrial safety spectacles) and remove rings, metal bands, or any other jewelry. Do not lean over the battery when jump starting.**
- **Do not attempt to jump start a frozen battery. It could explode and cause serious injury.**

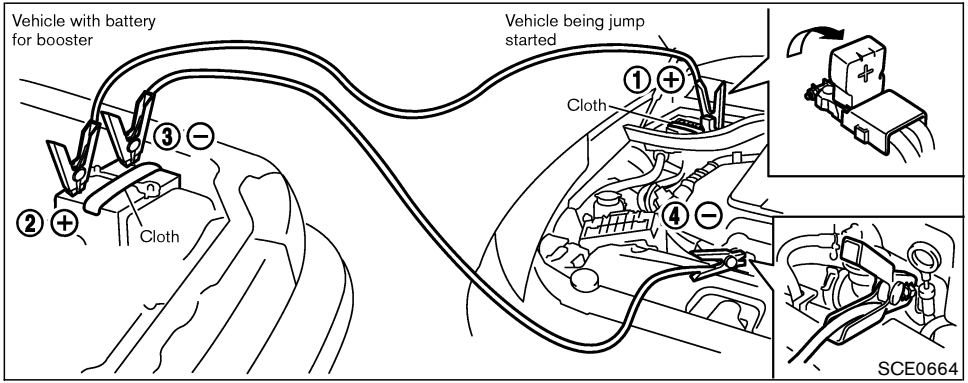

WARNING

Always follow the instructions below. Failure to do so could result in damage to the charging system and cause personal injury.

1. If the booster battery is in another vehicle, position the two vehicles to bring their batteries into close proximity to each other.

   Do not allow the two vehicles to touch.

2. Apply parking brake. Move the selector lever to the P (Park) position (automatic transmission models) or move the shift lever to the N (Neutral) position (manual transmission models). Switch off all unnecessary electrical systems (light, heater, air conditioner, etc.).
3. Remove vent caps on the battery (if so equipped). Cover the battery with an old cloth to reduce explosion hazard.
4. Connect jumper cables in the sequence as illustrated. (① - ④)

CAUTION

- **Always connect positive (+) to positive (+) and negative (–) to body ground (for example, strut mounting bolt, etc. — not to the battery).**
- **Make sure that the jumper cables do not touch moving parts in the engine compartment and that the cable clamps do not contact any other metal.**

5. Start the engine of the other vehicle and let it run for a few minutes.
6. Keep the engine speed of the other vehicle at about 2,000 rpm, and start your engine in the normal manner.

CAUTION

Do not keep the starter motor engaged for more than 10 seconds. If the engine does not start right away, turn the key off and wait 3 to 4 seconds before trying again.

7. After starting your engine, carefully disconnect the negative cable and then the positive cable.
8. Replace the vent caps (if so equipped). Be sure to dispose of the cloth used to cover the vent holes as it may be contaminated with corrosive acid.

PUSH STARTING

Do not attempt to start the engine by pushing.

CAUTION

- **Automatic transmission models cannot be push started. Attempting to do so may cause transmission damage.**
- **Three-way catalyst equipped models should not be started by pushing since the three-way catalyst may be damaged.**
- **Never try to start the vehicle by towing it; when the engine starts, the forward surge could cause the vehicle to collide with the tow vehicle.**

IF YOUR VEHICLE OVERHEATS

WARNING

- **Do not continue to drive if your vehicle overheats. Doing so could cause engine damage or a vehicle fire.**
- **To avoid the danger of being scalded, never remove the radiator cap while the engine is still hot. When the radiator cap is removed, pressurized hot water will spurt out, possibly causing serious injury.**
- **Do not open the hood if steam is coming out.**

If your vehicle is overheating (indicated by an extremely high temperature gauge reading), or if you feel a lack of engine power, detect abnormal noise, etc., take the following steps:

1. Move the vehicle safely off the road, apply the parking brake and move the shift lever to the N (Neutral) position (automatic transmission to the P (Park) position).

   Do not stop the engine.
2. Turn off the air conditioner. Open all the

windows, and move the temperature control to maximum hot and the fan control to high speed.

3. If engine overheating is caused by climbing a long hill on a hot day, run the engine at a fast idle (approximately 1,500 rpm) until the temperature gauge indication returns to normal.
4. Get out of the vehicle. Look and listen for steam or coolant escaping from the radiator before opening the hood. (If steam or coolant is escaping, turn off the engine.) Do not open the hood further until no steam or coolant can be seen.
5. Open the engine hood.

WARNING

If steam or water is coming from the engine, stand clear to prevent getting burned.

6. Visually check if the cooling fan is running. The radiator hoses and radiator should not leak water.

   If coolant is leaking or the cooling fan does not run, stop the engine.

WARNING

- **Be careful not to allow your hands, hair, jewelry or clothing to come into contact with, or get caught in, engine belts or the engine cooling fan.**
- **The engine cooling fan can start at any time when the coolant temperature is high.**

7. After the engine cools down, check the coolant level in the reservoir tank with the engine running. Add coolant to the reservoir tank if necessary. Have your vehicle repaired at a NISSAN dealer.

TOWING YOUR VEHICLE

When towing your vehicle, all State (Provincial in Canada) and local regulations for towing must be followed. Incorrect towing equipment could damage your vehicle. Towing instructions are available from a NISSAN dealer. Local service operators are generally familiar with the applicable laws and procedures for towing. To assure proper towing and to prevent accidental damage to your vehicle, NISSAN recommends having a service operator tow your vehicle. It is advisable to have the service operator carefully read the following precautions.

WARNING

- **Never ride in a vehicle that is being towed.**
- **Never get under your vehicle after it has been lifted by a tow truck.**

CAUTION

- **When towing, make sure that the transmission, axles, steering system and powertrain are in working condi-**

tion. If any unit is damaged, dollies must be used.

- **Always attach safety chains before towing.**

For information about towing your vehicle behind a recreational vehicle (RV), refer to “Flat towing” in the “9. Technical and consumer information” section of this manual.

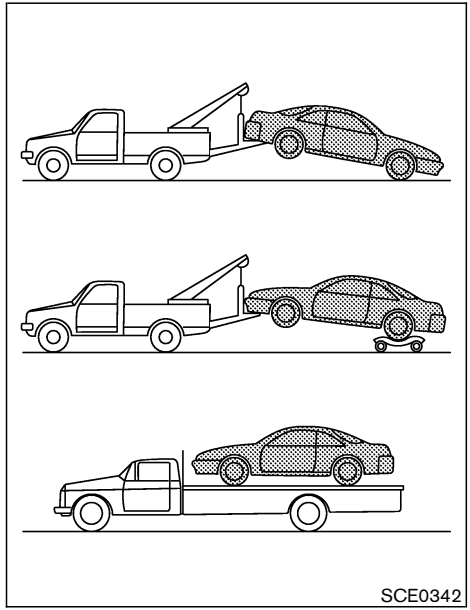

TOWING RECOMMENDED BY NISSAN

NISSAN recommends that your vehicle be towed with the driving (rear) wheels off the ground or place the vehicle on a flat bed truck as illustrated.

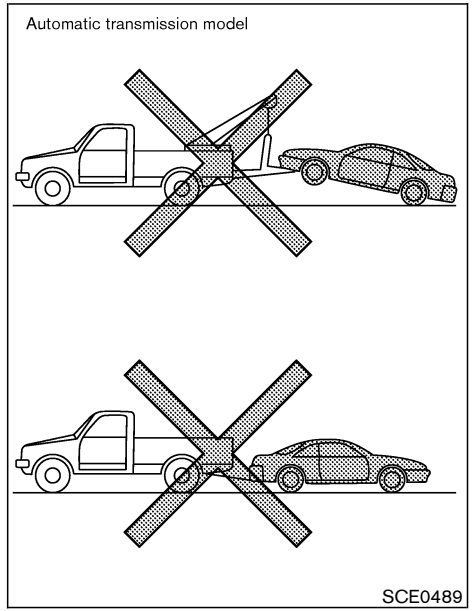

CAUTION

- **Never tow automatic transmission models with the rear wheels on the**

ground or four wheels on the ground (forward or backward) as this may cause serious and expensive damage to the transmission.
If it is necessary to tow the vehicle with the front wheels raised, always use towing dollies under the rear wheels.

- **When towing rear wheel drive models with the front wheels on the ground or on towing dollies:**

  Turn the ignition key to the OFF position, and secure the steering wheel in a straight ahead position with a rope or similar device. Never secure the steering wheel by turning the ignition key to the LOCK position. This may damage the steering lock mechanism.

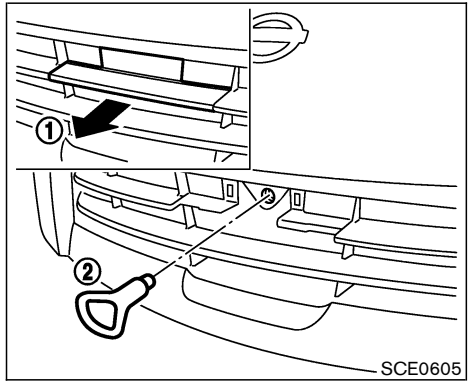

VEHICLE RECOVERY (Freeing a stuck vehicle)

Use the recovery hook by installing it in the front of the vehicle. (The rear has no towing points.)

1. Remove the front license plate (if so equipped).
2. Remove the recovery hook cover (1) from the bumper.
3. Securely install the recovery hook (2) stored with jacking tools.

Make sure that the hook is properly secured in the stored place after use.

WARNING

- **Stand clear of a stuck vehicle.**
- **Do not spin your tires at high speed. This could cause them to explode and result in serious injury. Parts of your vehicle could also overheat and be damaged.**

CAUTION

- **Tow chains or cables must be attached only to the vehicle recovery hooks or main structural members of the vehicle. Otherwise, the vehicle body will be damaged.**
- **Do not use the vehicle tie downs to free a vehicle stuck in sand, snow, mud, etc. Never tow a vehicle using the vehicle tie downs or recovery hooks.**
- **Always pull the cable straight out from the front of the vehicle. Never**

pull on the vehicle at an angle.

- **Pulling devices should be routed so they do not touch any part of the suspension, steering, brake or cooling systems.**
- **Pull devices such as ropes or canvas straps are not recommended for use in vehicle towing or recovery.**

If your vehicle is stuck in sand, snow, mud, etc., use the following procedure:

1. Turn off the Vehicle Dynamic Control (VDC) system or Traction Control System (TCS) (if so equipped).
2. Make sure the area in front and behind the vehicle is clear of obstructions.
3. Turn the steering wheel right and left to clear an area around the front tires.
4. Slowly rock the vehicle forward and backward.

- Shift back and forth between R (reverse) and D (drive) (automatic transmission models) or 1st (low) and R (reverse) (manual transmission models).
- Apply the accelerator as little as possible to maintain the rocking motion.
- Release the accelerator pedal before shifting between R and D (automatic transmission models) or 1st and R (manual transmission models).
- Do not spin the tires above 35 MPH (55 km/h).

5. If the vehicle cannot be freed after a few tries, contact a professional towing service to remove the vehicle.

MEMO

7 Appearance and care

Cleaning exterior 7-2
Washing 7-2
Waxing 7-3
Removing spots 7-3
Underbody 7-3
Glass 7-3
Aluminum alloy wheels 7-4
Chrome parts 7-4
Tire dressing 7-4
Cleaning interior 7-5
Floor mats 7-5
Seat belts 7-6
Corrosion protection 7-6
Most common factors contributing to vehicle corrosion 7-6
Environmental factors influence the rate of corrosion 7-6
To protect your vehicle from corrosion 7-6

CLEANING EXTERIOR

In order to maintain the appearance of your vehicle, it is important to take proper care of it.

In the following cases, please wash your vehicle as soon as possible to protect the paint surface.

- After a rainfall to prevent possible damage from acid rain
- After driving on coastal roads
- When contaminants such as soot, bird droppings, tree sap, metal particles or bugs get on the paint surface
- When dust or mud builds up on the surface

Whenever possible, store or park your vehicle inside a garage or in a covered area.

When it is necessary to park outside, park in a shady area or protect the vehicle with a body cover.

Be careful not to scratch the paint surface when putting on or removing the body cover.

WASHING

Wash dirt off the vehicle with a wet sponge and plenty of water. Clean the vehicle thoroughly using a mild soap, a special vehicle soap or a general purpose dish-washing liquid mixed with clean, lukewarm (never hot) water.

CAUTION

- **Do not use car washes that use acid in the detergent. Some car washes, especially brushless ones, use some acid for cleaning. The acid may react with some plastic vehicle components, causing them to crack. This could affect their appearance, and also could cause them not to function properly. Always check with your car wash to confirm that acid is not used.**
- **Do not use strong household soap, strong chemical detergents, gasoline or solvents.**
- **Do not wash the vehicle in direct sunlight or while the vehicle body is hot, as the surface may become water-spotted.**
- **Avoid using tight-napped or rough cloths, such as washing mitts. Care must be taken when removing caked-on dirt or other foreign substances so the paint surface is not scratched or damaged.**
- **For Roadster models, observe the following:**
  - **Do not use an automatic car wash or a high pressure car wash. The soft top may be damaged.**
  - **Avoid applying direct water pressure, such as high pressured water from household hoses, on the lining of the soft top and vehicle body. Avoid applying continuous water on the parts around the soft top and the windows. These may cause water to leak into the inside of your vehicle.**

Rinse the vehicle again with plenty of clean water.

Inside flanges, seams and folds on the doors, hatches and hood are particularly vulnerable to the effects of road salt. Therefore, these areas must be regularly cleaned. Make sure that the drain holes in the lower edge of the door are open. Spray water under the body and in the wheel wells to loosen the dirt and wash away road salt.

Avoid leaving water spots on the paint surface by using a damp chamois to dry the vehicle.

Soft top care and cleaning (Roadster models)

Proper care and handling should be observed to maintain a good appearance of the soft top. Improper care may cause the top cloth's surface to stiffen, stain, or mat. Follow the instructions shown in this section.

It is not necessary to wash the soft top every time you wash the vehicle body, but clean the top regularly before it becomes quite dirty. Leaving the soft top dirty or soiled for a long period will cause deterioration to the quality of the top material.

Remove dust or dirt on the soft top with a soft brush or sponge, then rinse it with plenty of clean water. When the top is quite dirty, wash using a mild detergent, such as a general cleaner especially made for a cloth top or a general purpose dish-washing liquid, mixed with clean, lukewarm (never hot) water. Rinse the top again with plenty of clean water to remove all traces of soap.

CAUTION

- **Do not use strong household soap, strong chemical detergents, gasoline or solvents.**
- **If glass cleaner gets on the soft top, immediately wash it off with clean water.**
- **Do not apply direct water pressure, such as high pressured water from household hoses, on the lining of the soft top and vehicle body, as this may cause water to leak into the inside of your vehicle.**

After cleaning, always be sure the top and its storage are completely **dry** before opening the top. Opening the top while it is wet or damp may cause interior water damage, water stains or mildew on the top.

WAXING

Regular waxing protects the paint surface and helps retain new vehicle appearance. Polishing is recommended to remove built-up wax residue and to avoid a weathered appearance before reapplying wax.

A NISSAN dealer can assist you in choosing the proper product.

- Wax your vehicle only after a thorough washing. Follow the instructions supplied with the wax.
- Do not use a wax containing any abrasives, cutting compounds or cleaners that may damage the vehicle finish.

Machine compounding or aggressive polishing on a base coat/clear coat paint finish may dull the finish or leave swirl marks.

REMOVING SPOTS

Remove tar and oil spots, industrial dust, insects, and tree sap as quickly as possible from the surface of the paint to avoid lasting damage or staining. Special cleaning products are available at a NISSAN dealer or any automotive accessory store.

UNDERBODY

In areas where road salt is used in winter, the underbody must be cleaned regularly. This will prevent dirt and salt from building up and causing underbody and suspension corrosion. Before the winter period and again in the spring, the underseal must be checked and, if necessary, re-treated.

GLASS

Use glass cleaner to remove smoke and dust film from the glass surfaces. It is normal for glass to

become coated with a film after the vehicle is parked in the hot sun. Glass cleaner and a soft cloth will easily remove this film.

CAUTION

- **When cleaning the inside of the windows, do not use sharp-edged tools, abrasive cleaners or chlorine-based disinfectant cleaners. They could damage the electrical conductors or rear window defroster elements.**
- **If glass cleaner gets on the soft top, immediately wash it off with clean water. (Roadster models)**

ALUMINUM ALLOY WHEELS

Wash regularly with a sponge dampened in a mild soap solution, especially during winter months in areas where road salt is used. Salt could discolor the wheels if not removed.

CAUTION

Follow the directions below to avoid staining or discoloring the wheels:

- **Do not use a cleaner that uses strong acid or alkali contents to clean the wheels.**
- **Do not apply wheel cleaners to the wheels when they are hot. The wheel temperature should be the same as ambient temperature.**
- **Rinse the wheel to completely remove the cleaner within 15 minutes after the cleaner is applied.**

CHROME PARTS

Clean all chrome parts regularly with a non-abrasive chrome polish to maintain the finish.

TIRE DRESSING

NISSAN does not recommend the use of tire dressings. Tire manufacturers apply a coating to the tires to help reduce discoloration of the rubber. If a tire dressing is applied to the tires, it may react with the coating and form a compound. This compound may come off the tire while driving and stain the vehicle paint.

If you choose to use a tire dressing, take the following precautions:

- Use a water-based tire dressing. The coating on the tire dissolves more easily with an oil-based tire dressing.
- Apply a light coat of tire dressing to help prevent it from entering the tire tread/grooves (where it would be difficult to remove).
- Wipe off excess tire dressing using a dry towel. Make sure the tire dressing is completely removed from the tire tread/grooves.
- Allow the tire dressing to dry as recommended by tire dressing manufacturer.

CLEANING INTERIOR

Occasionally remove loose dust from the interior trim, plastic parts and seats using a vacuum cleaner or soft bristled brush. Wipe the vinyl and leather surfaces with a clean, soft cloth dampened in mild soap solution, then wipe clean with a dry soft cloth.

Regular care and cleaning is required in order to maintain the appearance of the leather.

Before using any fabric protector, read the manufacturer's recommendations. Some fabric protectors contain chemicals that may stain or bleach the seat material.

Use a cloth dampened only with water, to clean the meter and gauge lens.

CAUTION

- **Never use benzine, thinner or any similar material.**
- **Small dirt particles can be abrasive and damaging to leather surfaces and should be removed promptly. Do not use saddle soap, car waxes, polishes, oils, cleaning fluids, solvents, detergents or ammonia-based cleaners as they may damage the leather natural finish.**
- **Never use fabric protectors unless recommended by the manufacturer.**
- **Do not use glass or plastic cleaner on meter or gauge lens covers. It may damage the lens cover.**

FLOOR MATS

The use of genuine NISSAN floor mats can extend the life of your vehicle carpet and make it easier to clean the interior. **No matter what mats are used, be sure they are fitted for your vehicle and are properly positioned in the footwell to prevent interference with pedal operation.** Mats should be maintained with regular cleaning and replaced if they become excessively worn.

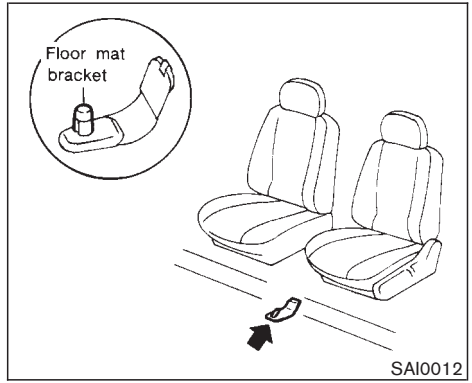

Floor mat positioning aid (driver's side only)

This model includes a front floor mat bracket to act as a floor mat positioning aid. NISSAN floor mats have been specially designed for your vehicle model. The driver's side floor mat has a grommet hole incorporated in it. Simply position the mat by placing the floor mat bracket through the floor mat grommet hole while centering the mat in the floorpan contour.

Periodically check to make certain that the mats are properly positioned.

SEAT BELTS

The seat belts can be cleaned by wiping them with a sponge dampened in a mild soap solution. Allow the belts to dry completely before using them. See “Seat belt maintenance” in the “1. Safety — Seats, seat belts and supplemental restraint system” section.

WARNING

Do not allow wet seat belts to roll up in the retractor. NEVER use bleach, dye or chemical solvents to clean the seat belts, since these may severely weaken the seat belt webbing.

MOST COMMON FACTORS CONTRIBUTING TO VEHICLE CORROSION

- The accumulation of moisture-retaining dirt and debris in body panel sections, cavities, and other areas.
- Damage to paint and other protective coatings caused by gravel and stone chips or minor traffic accidents.

ENVIRONMENTAL FACTORS INFLUENCE THE RATE OF CORROSION

Moisture

Accumulation of sand, dirt and water on the vehicle body underside can accelerate corrosion. Wet floor coverings will not dry completely inside the vehicle, and should be removed for drying to avoid floor panel corrosion.

Relative humidity

Corrosion will be accelerated in areas of high relative humidity, especially those areas where the temperatures stay above freezing and where atmospheric pollution exists and road salt is used.

Temperature

A temperature increase will accelerate the rate of corrosion to those parts which are not well ventilated.

Air pollution

Industrial pollution, the presence of salt in the air in coastal areas, or heavy road salt use will accelerate the corrosion process. Road salt will also accelerate the disintegration of paint surfaces.

TO PROTECT YOUR VEHICLE FROM CORROSION

- Wash and wax your vehicle often to keep the vehicle clean.
- Always check for minor damage to the paint and repair it as soon as possible.
- Keep drain holes at the bottom of the doors open to avoid water accumulation.
- Check the underbody for accumulation of sand, dirt or salt. If present, wash with water as soon as possible.

CAUTION

- **Never remove dirt, sand or other debris from the passenger compartment by washing it out with a hose. Remove dirt with a vacuum cleaner or broom.**
- **Never allow water or other liquids to come in contact with electronic components inside the vehicle as this may damage them.**

Chemicals used for road surface de-icing are extremely corrosive. They accelerate corrosion and deterioration of underbody components such as the exhaust system, fuel and brake lines, brake cables, floor pan and fenders.

In winter, the underbody must be cleaned periodically.

For additional protection against rust and corrosion, which may be required in some areas, consult a NISSAN dealer.

MEMO

8 Maintenance and do-it-yourself

Maintenance requirements 8-2
General maintenance 8-2
Explanation of general maintenance items 8-2
Maintenance precautions 8-5
Engine compartment check locations 8-7
Engine cooling system 8-8
Checking engine coolant level 8-8
Changing engine coolant 8-9
Engine oil 8-9
Checking engine oil level 8-9
Changing engine oil and filter 8-10
Automatic transmission fluid 8-12
Power steering fluid 8-12
Brake and clutch fluid 8-13
Brake fluid 8-13
Clutch fluid 8-13
Window washer fluid 8-14
Battery 8-15
Jump starting 8-16
Drive belts 8-16
Spark plugs 8-17
Replacing spark plugs 8-17
Air cleaners 8-18
Windshield wiper blades 8-18
Cleaning 8-18
Replacing 8-19
Brakes 8-20
Self-adjusting brakes 8-20
Brake pad wear indicators 8-20
Fuses 8-21
Engine compartment 8-21
Passenger compartment 8-23
Keyfob battery replacement 8-24
Lights 8-25
Headlights 8-26
Exterior and interior lights 8-27
Wheels and tires 8-29
Tire pressure 8-29
Tire labeling 8-33
Types of tires 8-35
Tire chains 8-36
Changing wheels and tires 8-36

MAINTENANCE REQUIREMENTS

Your new NISSAN has been designed to have minimum maintenance requirements with longer service intervals to save you both time and money. However, some day-to-day and regular maintenance is essential to maintain your NISSAN's good mechanical condition, as well as its emission and engine performance.

It is the owner's responsibility to make sure that scheduled maintenance, as well as general maintenance, is performed.

As the vehicle owner, you are the only one who can ensure that your vehicle receives the proper maintenance care. You are a vital link in the maintenance chain.

Scheduled maintenance:

For your convenience, both required and optional scheduled maintenance items are described and listed in your "NISSAN Service and Maintenance Guide". You must refer to that guide to ensure that necessary maintenance is performed on your NISSAN at regular intervals.

General maintenance:

General maintenance includes those items which should be checked during normal day-to-day operation. They are essential for proper vehicle operation. It is your responsibility to perform these procedures regularly as prescribed.

Performing general maintenance checks requires minimal mechanical skill and only a few general automotive tools.

These checks or inspections can be done by yourself, a qualified technician or, if you prefer, a NISSAN dealer.

Where to go for service:

If maintenance service is required or your vehicle appears to malfunction, have the systems checked and tuned by a NISSAN dealer.

NISSAN technicians are well-trained specialists and are kept up to date with the latest service information through technical bulletins, service tips, and in-dealership training programs. They are completely qualified to work on NISSAN vehicles **before** they work on your vehicle, rather than after they have worked on it.

You can be confident that a NISSAN dealer's service department performs the best job to meet the maintenance requirements of your vehicle — in a reliable and economic way.

GENERAL MAINTENANCE

During the normal day-to-day operation of the vehicle, general maintenance should be performed regularly as prescribed in this section. If you detect any unusual sounds, vibrations or smells, be sure to check for the cause or have a NISSAN dealer do it promptly. In addition, you should notify a NISSAN dealer if you think that repairs are required.

When performing any checks or maintenance work, closely observe the "Maintenance precautions" later in this section.

EXPLANATION OF GENERAL MAINTENANCE ITEMS

Additional information on the following items with "*" is found later in this section.

Outside the vehicle

The maintenance items listed here should be performed from time to time, unless otherwise specified.

Doors and engine hood: Check that all doors and the engine hood operate smoothly as well as the trunk lid or back hatch. Also make sure that all latches lock securely. Lubricate if necessary. Make sure that the secondary latch keeps the hood from opening when the primary latch is released.

When driving in areas using road salt or other

corrosive materials, check lubrication frequently.

Lights*: Clean the headlights on a regular basis. Make sure that the headlights, stop lights, tail lights, turn signal lights, and other lights are all operating properly and installed securely. Also check headlight aim.

Road wheel nuts (lug nuts)*: When checking the tires, make sure no nuts are missing, and check for any loose nuts. Tighten if necessary.

Tire rotation*: Tires cannot be rotated in this vehicle.

Tire, wheel alignment and balance: If the vehicle pulls to either side while driving on a straight and level road, or if you detect uneven or abnormal tire wear, there may be a need for wheel alignment.

If the steering wheel or seat vibrates at normal highway speeds, wheel balancing may be needed.

For additional information regarding tires, refer to "Important Tire Safety Information" (US) or "Tire Safety Information" (Canada) in the Warranty Information Booklet.

Tires*: Check the pressure with a gauge often and always prior to long distance trips. Adjust the pressure in all tires, including the spare, to the pressure specified. Check carefully for damage, cuts or excessive wear.

Windshield: Clean the windshield on a regular basis. Check the windshield at least every six months for cracks or other damage. Have a damaged windshield repaired by a qualified repair facility.

Windshield wiper blades*: Check for cracks or wear if they do not wipe properly.

Inside the vehicle

The maintenance items listed here should be checked on a regular basis, such as when performing periodic maintenance, cleaning the vehicle, etc.

Automatic transmission P (Park) position mechanism: On a fairly steep hill check that the vehicle is held securely with the selector lever in the P (Park) position without applying any brakes.

Accelerator pedal: Check the pedal for smooth operation and make sure the pedal does not catch or require uneven effort. Keep the floor mat away from the pedal.

Brake pedal: Check the pedal for smooth operation. If the brake pedal suddenly goes down further than normal, the pedal feels spongy or the vehicle seems to take longer to stop, see a NISSAN dealer immediately. Keep the floor mat away from the pedal.

Brakes: Check that the brakes do not pull the vehicle to one side when applied. Check the brake booster function. Be sure to keep floor mat away from the pedal.

Parking brake: Check the parking brake operation regularly. The vehicle should be securely held on a fairly steep hill with only the parking brake applied. If the parking brake needs to be adjusted, see a NISSAN dealer.

Seats: Check seat position controls such as seat adjusters, seatback recliner, etc. to ensure they operate smoothly and that all latches lock securely in every position. Check that the head restraints move up and down smoothly and that the locks (if equipped) hold securely in all latched positions.

Seat belts: Check that all parts of the seat belt system (for example, buckles, anchors, adjusters and retractors) operate properly and smoothly, and are installed securely. Check the belt webbing for cuts, fraying, wear or damage.

Steering wheel: Check for changes in the steering conditions, such as excessive free play, hard steering or strange noises.

Warning lights and chimes: Make sure that all warning lights and chimes are operating properly.

Windshield wiper and washer*: Check that the wipers and washer operate properly and that the wipers do not streak.

Windshield defroster: Check that the air comes out of the defroster outlets properly and in good quantity when operating the heater or air conditioner.

Under the hood and the vehicle

The maintenance items listed here should be checked periodically (for example, each time you check the engine oil or refuel).

Battery*: Check the fluid level in each cell. It should be between the MAX and MIN lines. Vehicles operated in high temperatures or under severe conditions require frequent checks of the battery fluid level.

Brake and clutch fluid levels*: Make sure that the brake and clutch fluid levels are between the MAX and MIN lines on the reservoir.

Engine coolant level*: Check the coolant level when the engine is cold.

Engine drive belts*: Make sure that no belt is frayed, worn, cracked or oily.

Engine oil level*: Check the level on the dipstick after parking the vehicle on a level spot, turning off the engine and waiting 10 minutes.

Exhaust system: Make sure there are no loose supports, cracks or holes. If the sound of the exhaust seems unusual or there is a smell of exhaust fumes, immediately locate the trouble and correct it. (See “Precautions when starting and driving” in the “5. Starting and driving” section for exhaust gas (carbon monoxide).)

Fluid leaks: Check under the vehicle for fuel, oil, water or other fluid leaks after the vehicle has been parked for a while. Water dripping from the air conditioner after use is normal. If you should notice any leaks or if gasoline fumes are evident, check for the cause and have it corrected immediately.

Power steering fluid level* and lines: Check the level in the reservoir tank with the engine off. Check the lines for proper attachment, leaks, cracks, etc.

Radiator and hoses: Check the front of the radiator and clean off any dirt, insects, leaves, etc., that may have accumulated. Make sure the hoses have no cracks, deformation, deterioration or loose connections.

Underbody: The underbody is frequently exposed to corrosive substances such as those used on icy roads or to control dust. It is very important to remove these substances, otherwise rust will form on the floor pan, frame, fuel lines and around the exhaust system. At the end of winter, the underbody should be thoroughly flushed with plain water, being careful to clean those areas where mud and dirt may accumulate. For additional information, see “Cleaning exterior” in the “7. Appearance and care” section.

Window washer fluid*: Check that there is adequate fluid in the tank.

MAINTENANCE PRECAUTIONS

When performing any inspection or maintenance work on your vehicle, always take care to prevent serious accidental injury to yourself or damage to the vehicle. The following are general precautions which should be closely observed.

WARNING

- **Park the vehicle on a level surface, apply the parking brake securely and block the wheels to prevent the vehicle from moving. For manual transmission models, move the shift lever to N (Neutral) position. For automatic transmission models, move the selector lever to P (Park).**
- **Be sure the ignition key is in the OFF or LOCK position when performing any parts replacement or repairs.**
- **Never connect or disconnect the battery or any transistorized component while the ignition switch is in the ON position.**
- **Never leave the engine or automatic transmission related component harnesses disconnected while the ignition switch is in the ON position.**
- **If you must work with the engine running, keep your hands, clothing, hair and tools away from moving fans, belts and any other moving parts.**
- **It is advisable to secure or remove any loose clothing and remove any jewelry, such as rings, watches, etc. before working on your vehicle.**
- **Always wear eye protection whenever you work on your vehicle.**
- **If you must run the engine in an enclosed space such as a garage, be sure there is proper ventilation for exhaust gases to escape.**
- **Never get under the vehicle while it is supported only by a jack. If it is necessary to work under the vehicle, support it with safety stands.**
- **Keep smoking materials, flame and sparks away from the fuel tank and battery.**
- **On gasoline engine models with the multiport fuel injection (MFI) system, the fuel filter or fuel lines should be serviced by a NISSAN dealer because the fuel lines are under high pressure even when the engine is off.**

CAUTION

- **Do not work under the hood while the engine is hot. Turn the engine off and wait until it cools down.**
- **Avoid contact with used engine oil and coolant. Improperly disposed engine oil, engine coolant and/or other vehicle fluids can damage the environment. Always conform to local regulations for disposal of vehicle fluid.**

This “8. Maintenance and do-it-yourself” section gives instructions regarding only those items which are relatively easy for an owner to perform.

A genuine NISSAN Service Manual is also available. See “Owner’s Manual/Service Manual or-

der information” in the “9. Technical and consumer information” section.

You should be aware that incomplete or improper servicing may result in operating difficulties or excessive emissions, and could affect your warranty coverage. **If in doubt about any servicing, have it done by a NISSAN dealer.**

ENGINE COMPARTMENT CHECK LOCATIONS

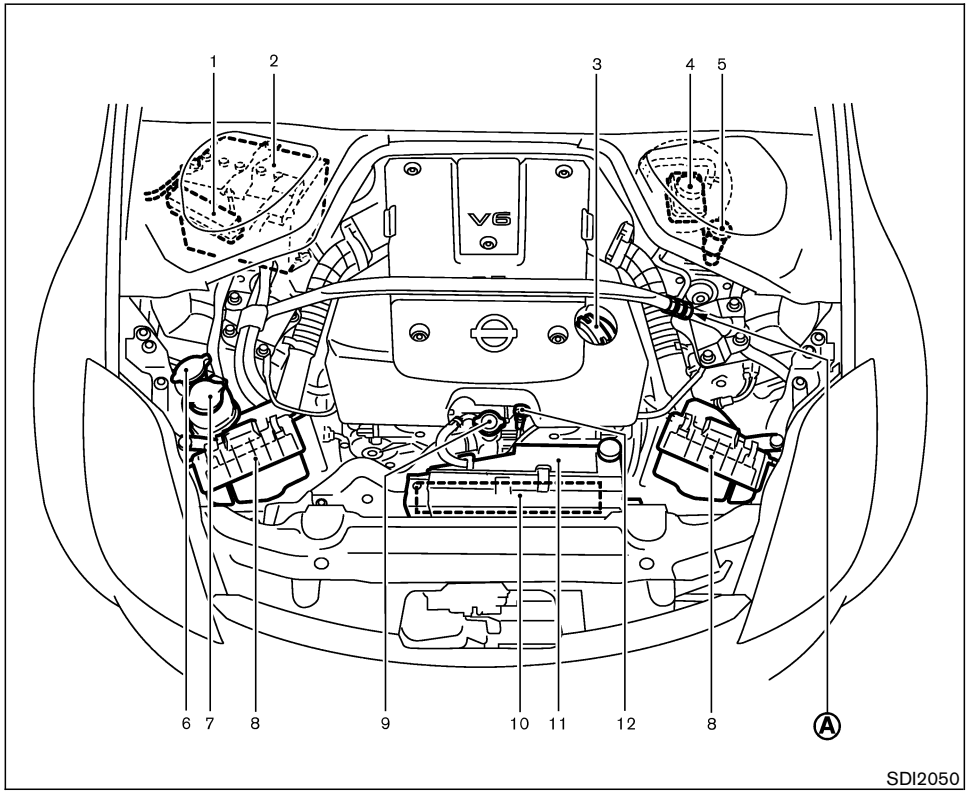

1. Fuse/fusible link holder
2. Battery
3. Engine oil filler cap
4. Brake fluid reservoir
5. Clutch fluid reservoir (M/T models)
6. Window washer fluid reservoir
7. Power steering fluid reservoir
8. Air cleaner
9. Radiator filler cap
10. Engine drive belts
11. Engine coolant reservoir
12. Engine oil dipstick

Do not tamper with the strut tower bar adjustment Ⓐ. The strut tower bar has been adjusted to the most suitable position at the factory.

CAUTION

Tampering with the strut tower bar adjustment may cause a noise while driving or damage to the hood or engine.

ENGINE COOLING SYSTEM

The engine cooling system is filled at the factory with a high-quality, year-round, anti-freeze coolant solution. The anti-freeze solution contains rust and corrosion inhibitors, therefore additional cooling system additives are not necessary.

WARNING

- **Never remove the radiator or coolant reservoir cap when the engine is hot. Wait until the engine and radiator cool down. Serious burns could be caused by high pressure fluid escaping from the radiator. See precautions in "If your vehicle overheats" found in the "6. In case of emergency" section of this manual.**
- **The radiator is equipped with a pressure type radiator cap. To prevent engine damage, use only a genuine NISSAN radiator cap.**

Outside temperature down to		Anti-freeze	Demineralized water/ distilled water
°C	°F		
–35	–30	50%	50%

CAUTION

When adding or replacing coolant, be sure to use only a Genuine NISSAN Long Life Antifreeze/Coolant (green) or equivalent with the proper mixture ratio of 50% anti-freeze and 50% demineralized water/distilled water. The use of other types of coolant solutions may damage your engine cooling system.

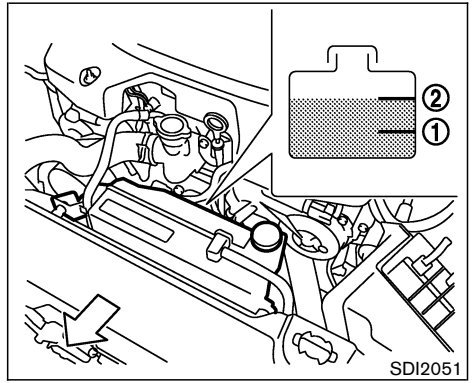

CHECKING ENGINE COOLANT LEVEL

Check the coolant level in the reservoir tank when the engine is cold. If the coolant level is below MIN ①, add coolant up to the MAX ② level. If the reservoir tank is empty, check the coolant level in the radiator **when the engine is cold.** If there is insufficient coolant in the radiator, fill the radiator with coolant up to the filler opening and also add it to the reservoir tank up to the MAX ② level.

Tighten the cap securely after adding engine coolant.

If the engine cooling system frequently requires coolant, have it checked by a NISSAN dealer.

CHANGING ENGINE COOLANT

Contact a NISSAN dealer if replacement is required.

- Major cooling system repairs should be performed by a NISSAN dealer. The service procedures can be found in the appropriate NISSAN Service Manual.
- Improper servicing can result in reduced heater performance and engine overheating.

WARNING

- **To avoid being scalded, never change the coolant when the engine is hot.**
- **Never remove the radiator cap when the engine is hot. Serious burns could be caused by high pressure fluid escaping from the radiator.**
- **Avoid direct skin contact with used coolant. If skin contact is made, wash thoroughly with soap or hand cleaner as soon as possible.**
- **Keep coolant out of reach of children and pets.**

Engine coolant must be disposed of properly. Check your local regulations.

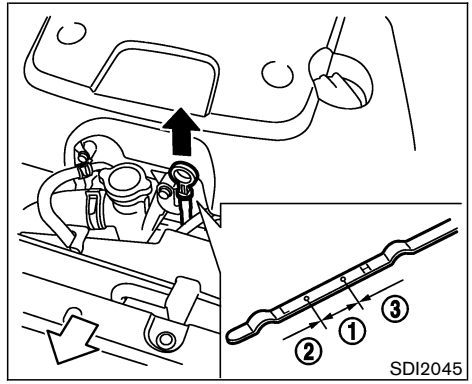

CHECKING ENGINE OIL LEVEL

1. Park the vehicle on a level surface and apply the parking brake.
2. Start the engine and let it idle until it reaches the operating temperature.
3. Turn off the engine. **Wait more than 10 minutes for the oil to drain back into the oil pan.**
4. Remove the dipstick and wipe it clean. Reinsert it all the way.

5. Remove the dipstick again and check the oil level. It should be between the H and L marks ①. If the oil level is below the L mark ②, remove the oil filler cap and pour recommended oil through the opening. **Do not overfill ③.**
6. Recheck oil level with the dipstick.

It is normal to add some oil between oil maintenance intervals or during the break-in period, depending on the severity of operating conditions.

CAUTION

Oil level should be checked regularly. Operating the engine with an insufficient amount of oil can damage the engine, and such damage is not covered by warranty.

CHANGING ENGINE OIL AND FILTER

Change the engine oil and filter according to the maintenance log shown in the “NISSAN Service and Maintenance Guide”.

Vehicle set-up

1. Park the vehicle on a level surface and apply the parking brake.
2. Start the engine and let it idle until it reaches the operating temperature.
3. Turn the engine off and wait more than 10 minutes.
4. Raise and support the vehicle using a suitable floor jack and safety jack stands.

- Place the safety jack stands under the vehicle jack-up points.
- A suitable adapter should be attached to the jack stand saddle.

5. Remove the plastic engine undercover.

a. Remove the small plastic clip at the center point of the undercover.

b. Then remove the other bolts that hold the undercover in place.

CAUTION

Make sure the correct lifting and support points are used to avoid vehicle damage.

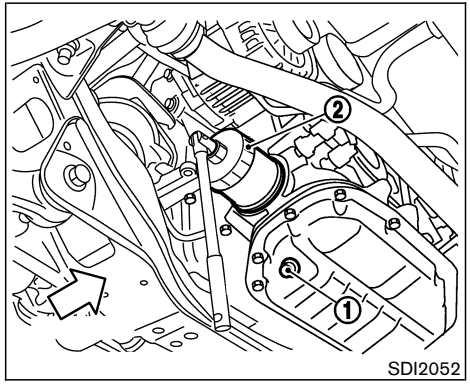

Engine oil and filter

1. Place a large drain pan under the drain plug ①.
2. Remove the oil filler cap.
3. Remove the drain plug with a wrench and completely drain the oil.

WARNING

- **Prolonged and repeated contact with used engine oil may cause skin cancer.**

- **Try to avoid direct skin contact with used oil. If skin contact is made, wash thoroughly with soap or hand cleaner as soon as possible.**
- **Keep used engine oil out of reach of children.**

CAUTION

Be careful not to burn yourself, as the engine oil is hot.

- **Waste oil must be disposed of properly.**
- **Check your local regulations.**

4. Loosen the oil filter with an oil filter wrench (2). Remove the oil filter by turning it by hand.
5. Wipe the engine oil filter mounting surface with a clean rag.

   Be sure to remove any old rubber gasket remaining on the mounting surface of the engine.
6. Coat the gasket on the new filter with clean engine oil.
7. Screw in the oil filter clockwise until a slight resistance is felt, then tighten additionally more than 2/3 turn.

   Oil filter tightening torque:

   11 to 15 ft-lb
   (14.7 to 20.5 N·m)
8. Clean and re-install the drain plug and a new washer. Securely tighten the drain plug with a wrench.

   Drain plug tightening torque:

   22 to 29 ft-lb
   (29 to 39 N·m)

   Do not use excessive force.
9. Refill engine with recommended oil and install the cap securely.

CAUTION

The dipstick must be inserted in place to prevent oil spillage from the dipstick hole while filling the engine with oil.

See “Capacities and recommended fuel/lubricants” in the “9. Technical and consumer information” section for drain and refill capacity. The drain and refill capacity depends on the oil temperature and drain time. Use these specifications for reference only. Always use the dipstick to determine the proper amount of oil in the engine.

10. Start the engine and check for leakage around the drain plug and the oil filter. Correct as required.
11. Turn the engine off and wait more than 10 minutes. Check the oil level with the dipstick. Add engine oil if necessary.

After the operation

1. Install the engine undercover into position as outlined in the following steps.

a. Pull the center of the small plastic clip out.

b. Hold the engine undercover into position.

c. Insert the clip through the undercover into the hole in the frame, then push the center of the clip in to lock the clip in place.

d. Install the other bolts that hold the undercover in place. Be careful not to strip the bolts or over-tighten them.

2. Lower the vehicle carefully to the ground.
3. Dispose of waste oil and filter properly.

AUTOMATIC TRANSMISSION FLUID

When checking or replacement is required, we recommend a NISSAN dealer for servicing.

CAUTION

- **Use only Genuine NISSAN Matic J ATF. Do not mix with other fluids.**
- **Using automatic transmission fluid other than Genuine NISSAN Matic J ATF will cause deterioration in drive-ability and automatic transmission durability, and may damage the automatic transmission, which is not covered by the NISSAN new vehicle limited warranty.**

The specified automatic transmission fluid is also described on caution labels located in the engine compartment.

POWER STEERING FLUID

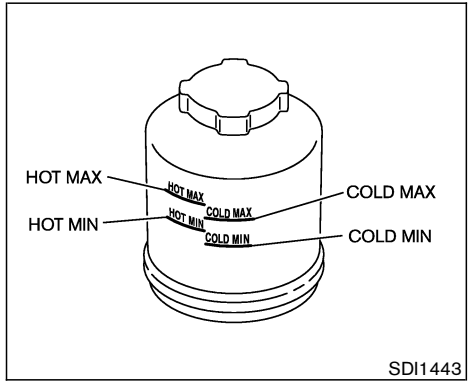

Check the fluid level in the reservoir tank.

The fluid level should be checked using the HOT range at fluid temperatures of 122 - 176°F (50 - 80°C) or using the COLD range at fluid temperatures of 32 - 86°F (0 - 30°C).

If the fluid is below the MIN line, add Genuine NISSAN PSF fluid. Remove the cap and fill through the opening.

CAUTION

- **Do not overfill.**
- **Recommended fluid is Genuine NISSAN PSF or equivalent.**

For more information regarding suitable equivalents, see “Capacities and recommended fuel/lubricants” in the “9. Technical and consumer information” section.

BRAKE AND CLUTCH FLUID

For additional brake and clutch fluid information, refer to “Capacities and recommended fuel/lubricants” in the “9. Technical and consumer information” section of this manual.

WARNING

- **Use only new fluid from a sealed container. Old, inferior or contaminated fluid may damage the brake and clutch systems. Do not add synthetic brake fluid. The use of improper fluids can damage the brake system and affect the vehicle’s stopping ability.**
- **Be sure to clean the filler cap before removing.**

CAUTION

Do not spill the fluid on any painted surfaces. This will damage the paint. If fluid is spilled, immediately wash the surface with water.

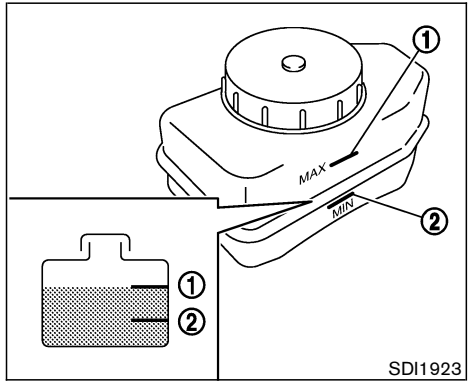

BRAKE FLUID

Check the fluid level in the reservoir. If the fluid is below the MIN line (2) or the brake warning light comes on, add Genuine NISSAN Super Heavy Duty Brake Fluid or equivalent **DOT 3** fluid up to the MAX line (1). If fluid must be added frequently, the system should be thoroughly checked by a NISSAN dealer.

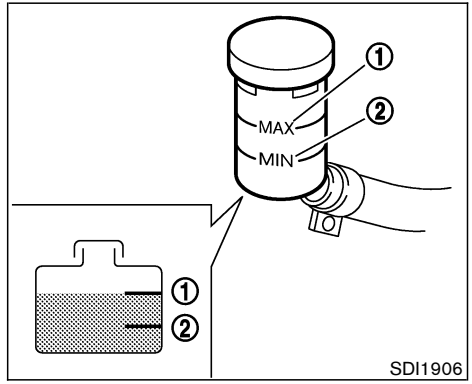

CLUTCH FLUID

Check the fluid level in the reservoir. If the fluid level is below the MIN line (2), add Genuine NISSAN Super Heavy Duty Brake Fluid or equivalent **DOT 3** fluid up to the MAX line (1).

If fluid is added frequently, the system should be thoroughly checked by a NISSAN dealer.

WINDOW WASHER FLUID

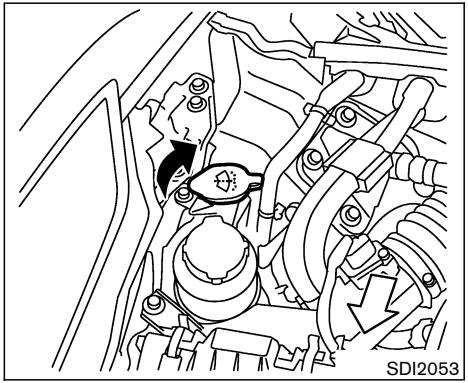

Add fluid when the low washer fluid warning light comes on.

Add a washer solvent to the washer fluid for better cleaning. In the winter season, add a windshield washer anti-freeze. Follow the manufacturer's instructions for the mixture ratio.

Recommended fluid is Genuine NISSAN Windshield Washer Concentrate Cleaner & Anti-freeze or equivalent.

WARNING

Anti-freeze is poisonous and should be stored carefully in marked containers out of the reach of children.

CAUTION

- **Do not substitute engine anti-freeze coolant for window washer solution. This may result in damage to the paint.**
- **Do not fill the window washer reservoir tank with washer fluid concentrates at full strength. Some methyl alcohol based washer fluid concentrates may permanently stain the grille if spilled while filling the window washer reservoir tank.**
- **Pre-mix washer fluid concentrates with water to the manufacturer's recommended levels before pouring the fluid into the window washer reservoir tank. Do not use the window washer reservoir tank to mix the washer fluid concentrate and water.**

- Keep the battery surface clean and dry. Clean the battery with a solution of baking soda and water.
- Make certain the terminal connections are clean and securely tightened.
- If the vehicle is not to be used for 30 days or longer, disconnect the (–) negative battery terminal to prevent discharging it.

CAUTION

When the battery cable is removed from the battery terminal, do not close either of the front doors. The automatic window adjusting function will not work, and the side roof panel/top side rail may be damaged by doing so.

To disconnect the negative (–) battery terminal, perform the procedure in the following order. Otherwise, the window and the side roof panel/top side rail may contact and be damaged.

1. **Close the windows.**
2. **Open the hood.**
3. **Close and lock all the doors using the key or keyfob.**
4. **Disconnect the negative (–) battery terminal.**
5. **Securely close the hood.**

To connect the negative (–) battery terminal, perform the procedure in the following order. Otherwise, the window and the side roof panel/top side rail may contact and be damaged.

1. **Unlock (using the key) and open the driver side door. Do not close the door.**
2. **Open the hood.**
3. **Connect the negative (–) battery terminal. Then close the hood.**
4. **Fully open the driver side door window.**
5. **Close the driver side door and the window.**

WARNING

- **Do not expose the battery to flames or electrical sparks. Hydrogen gas, generated by battery fluid, is explosive. Do not allow battery fluid to contact your skin, eyes, fabrics, or painted surfaces. After touching a battery or battery cap, do not touch or rub your eyes. Thoroughly wash your hands. If the acid contacts your eyes, skin or clothing, immediately flush with water for at least 15 minutes and seek medical attention.**
- **Do not operate the vehicle if the fluid in the battery is low. Low battery fluid can cause a higher load on the battery which can generate heat, reduce battery life, and in some cases lead to an explosion.**
- **When working on or near a battery, always wear suitable eye protection and remove all jewelry.**
- **Battery posts, terminals and related accessories contain lead and lead compounds. Wash hands after handling.**
- **Keep the battery out of the reach of children.**

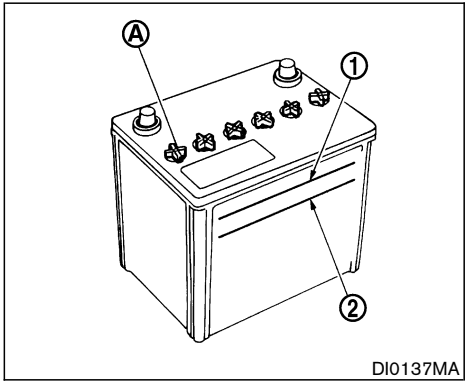

Check the fluid level in each cell. It should be between the UPPER LEVEL (1) and LOWER LEVEL (2) lines.

If it is necessary to add fluid, add only distilled water to bring the level to the indicator in each filler opening. **Do not overfill.**

Vehicles operated in high temperatures or under severe conditions require frequent checks of the battery fluid level.

1. Remove the cell plugs (A).
2. Add distilled water up to the UPPER LEVEL line (1).
3. Tighten cell plugs.

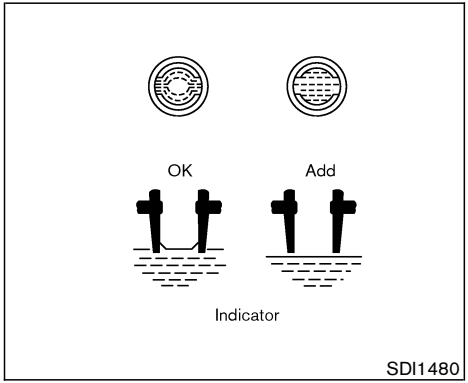

JUMP STARTING

If jump starting is necessary, see “Jump starting” in the “6. In case of emergency” section. If the engine does not start by jump starting, the battery may have to be replaced. Contact a NISSAN dealer.

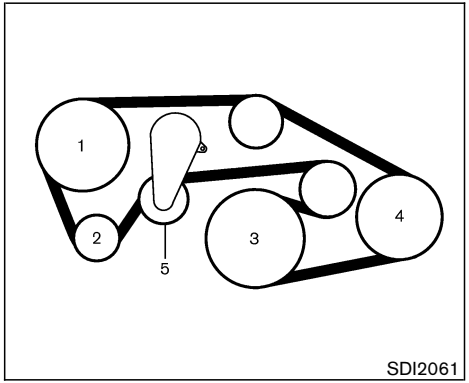

1. Power steering fluid pump
2. Alternator
3. Crankshaft pulley
4. Air conditioner compressor
5. Drive belt auto-tensioner

WARNING

Be sure the ignition key is in the OFF or LOCK position before servicing drive belts. The engine could rotate

unexpectedly.

1. Visually inspect each belt for signs of unusual wear, cuts, fraying, oil adhesion or looseness. If the belt is in poor condition or loose, have it replaced or adjusted by a NISSAN dealer.
2. Have the belts checked regularly for condition.

REPLACING SPARK PLUGS

If replacement is required, see a NISSAN dealer for servicing.

WARNING

Be sure the engine and ignition switch are off and that the parking brake is engaged securely.

CAUTION

Be sure to use the correct socket to remove the spark plugs. An incorrect socket can damage the spark plugs.

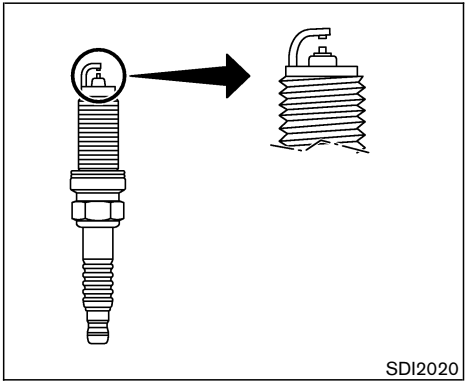

Iridium-tipped spark plugs

It is not necessary to replace the iridium-tipped spark plugs as frequently as the conventional type spark plugs since they will last much longer. Follow the maintenance log shown in the “NISSAN Service and Maintenance Guide”, but do not service iridium-tipped spark plugs by cleaning or regapping.

Always replace spark plugs with recommended or equivalent ones.

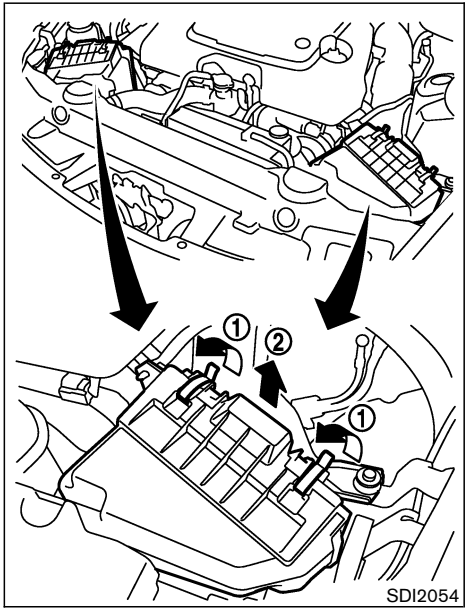

To remove the filter from the air cleaner, pull off the retainers ① and pull the unit upward ②.

The filter element should not be cleaned and reused. Replace it according to the maintenance log shown in the "NISSAN Service and Maintenance Guide". When replacing the filter, wipe the inside of the air cleaner housing and the cover with a damp cloth.

WARNING

- **Operating the engine with the air cleaner removed can cause you or others to be burned. The air cleaner not only cleans the air, it stops the flame if the engine backfires. If it is not there, and the engine backfires, you could be burned. Do not drive with the air cleaner removed, and be careful when working on the engine with the air cleaner removed.**
- **Never pour fuel into the throttle body or attempt to start the engine with the air cleaner removed. Doing so could result in serious injury.**

CAUTION

- **After wiper blade replacement, return the wiper arm to its original position.**

  Otherwise it may be damaged when the engine hood is opened.
- **Make sure the wiper blades contact the glass; otherwise the arms may be damaged from wind pressure.**
- **Worn windshield wiper blades can damage the windshield and impair driver vision.**

CLEANING

If your windshield is not clear after using the windshield washer or if a wiper blade chatters when running, wax or other material may be on the blade or windshield.

Clean the outside of the windshield with a washer solution or a mild detergent. Your windshield is clean if beads do not form when rinsing with clear water.

Clean the blade by wiping it with a cloth soaked in a washer solution or a mild detergent. Then

rinse the blade with clear water. If your windshield is still not clear after cleaning the blades and using the wiper, replace the blades.

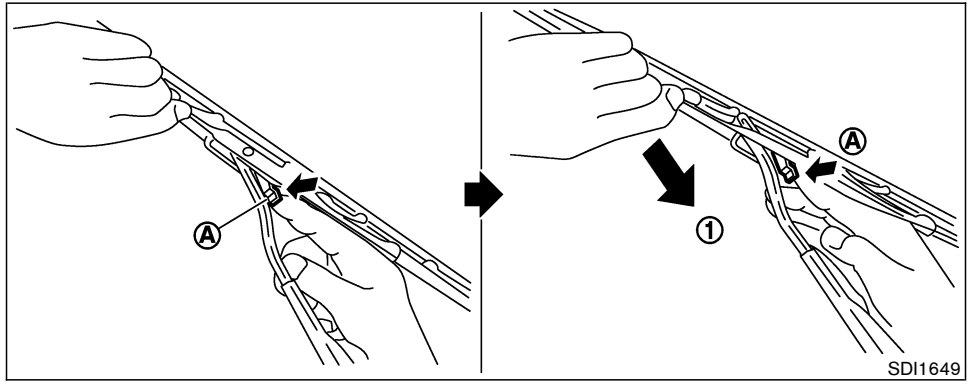

REPLACING

Replace the wiper blades if they are worn.

1. Pull the wiper arm.
2. Push the release tab (A), then move the wiper blade down the wiper arm to remove (1).
3. Insert the new wiper blade onto the wiper arm until a click sounds.

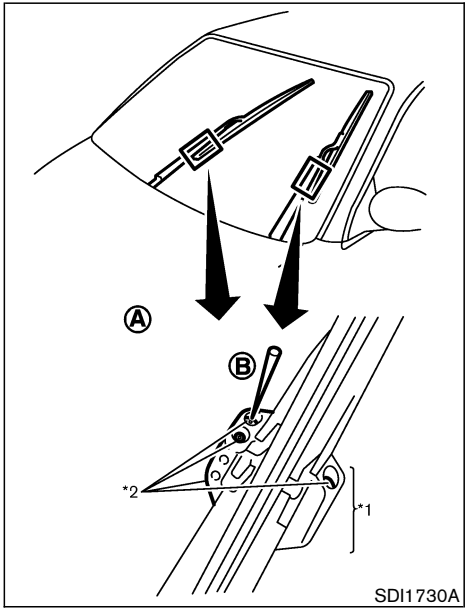

If necessary, clean the windshield washer nozzle Ⓐ with a needle or small pin Ⓑ.

*1: Only for passenger's side wiper arm
*2: Adjustable washer nozzles

If the brakes do not operate properly, have the brakes checked by a NISSAN dealer.

SELF-ADJUSTING BRAKES

Your vehicle is equipped with self-adjusting brakes.

The disc-type brakes self-adjust every time the brake pedal is applied.

WARNING

See a NISSAN dealer for a brake system check if the brake pedal height does not return to normal.

BRAKE PAD WEAR INDICATORS

The disc brake pads on your vehicle have audible wear indicators. When a brake pad requires replacement, it will make a high pitched scraping or screeching sound when the vehicle is in motion whether or not the brake pedal is depressed. Have the brakes checked as soon as possible if the wear indicator sound is heard.

Under some driving or climate conditions, occasional brake squeak, squeal or other noise may be heard. Occasional brake noise during light to moderate stops is normal and does not affect the function or performance of the brake system.

Proper brake inspection intervals should be followed. For additional information, see the appropriate maintenance log shown in the NISSAN Service and Maintenance Guide.

FUSES

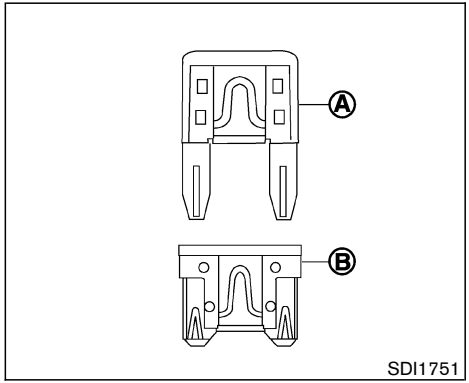

Some vehicles are equipped with engine compartment and passenger compartment fuse boxes that use only type Ⓐ fuses. Other vehicles are equipped with type Ⓐ fuses in the engine compartment fuse box and type Ⓑ fuses in the passenger compartment fuse box.

Type Ⓐ fuses are provided as spare fuses. They are stored in the passenger compartment fuse box.

Type Ⓐ fuses can be installed in the engine compartment and passenger compartment fuse boxes.

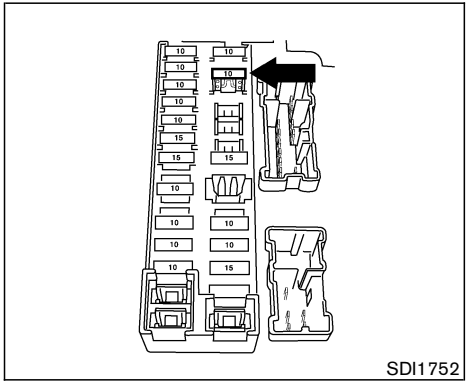

If a type Ⓐ fuse is used to replace a type Ⓑ fuse, the type Ⓐ fuse will not be level with the fuse pocket as shown in the illustration. This will not affect the performance of the fuse. Make sure the fuse is installed in the fuse box securely.

Type Ⓑ fuses cannot be installed in the underhood fuse boxes. Only use type Ⓐ fuses in the underhood fuse boxes.

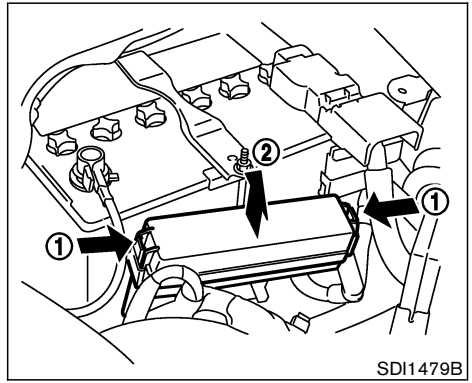

ENGINE COMPARTMENT

CAUTION

Never use a fuse of a higher or lower amperage rating than that specified on the fuse box cover. This could damage the electrical system or cause a fire.

If any electrical equipment does not operate, check for an open fuse.

1. Be sure the ignition switch and headlight switch are OFF.

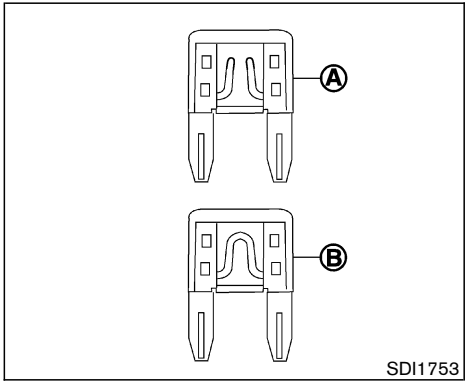

2. Open the engine hood and remove the cover on the battery and the fuse/fusible link holder.
3. Remove the fuse/fusible link holder cover by pushing the tabs (1) and lifting the cover (2).
4. Remove the fuse with the fuse puller. The fuse puller is located in the passenger compartment fuse box.
5. If the fuse is open (A), replace it with a new fuse (B). Spare fuses are stored in the passenger compartment fuse box.
6. If a new fuse also opens, have the electrical system checked and repaired by a NISSAN dealer.

Fusible links

If any electrical equipment does not operate and fuses are in good condition, check the fusible links. If any of these fusible links are melted, replace only with genuine NISSAN parts.

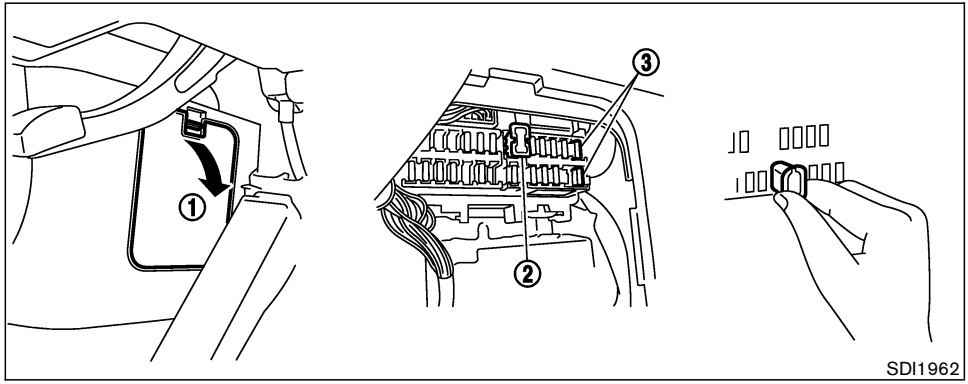

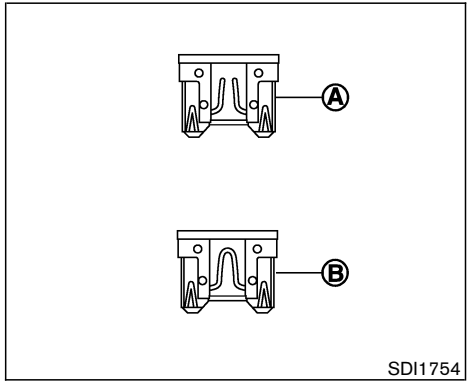

PASSENGER COMPARTMENT

CAUTION

Never use a fuse of a higher or lower amperage rating than that specified on the fuse box cover. This could damage the electrical system or cause a fire.

If any electrical equipment does not operate, check for an open fuse.

1. Be sure the ignition switch and the headlight switch are OFF.
2. Open the fuse box lid (1).
3. Pinch the fuse perpendicularly with the fuse puller (2) and pull it out.
4. If the fuse is open (A), replace it with a new fuse (B). Spare fuses (3) are stored in the fuse box.
5. If a new fuse also opens, have the electrical system checked and repaired by a NISSAN dealer.

KEYFOB BATTERY REPLACEMENT

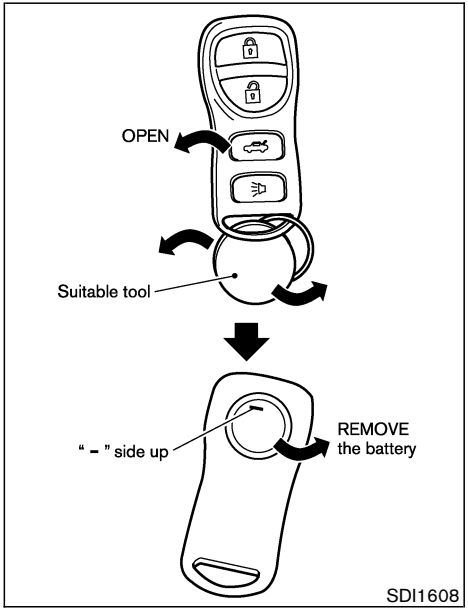

Replace the battery as follows:

1. Open the lid using a suitable tool.
2. Replace the battery with a new one. Recommended battery: CR2025 or equivalent

   Make sure that the ⊕ side faces the bottom case.
3. Close the lid securely.
4. Push the keyfob button two or three times to check its operation.

See a NISSAN dealer if you need any assistance for replacement.

If the battery is removed for any reason other than replacement, perform step 4 above.

- **Be careful not to touch the circuit board and the battery terminal.**
- **An improperly disposed battery can harm the environment. Always confirm local regulations for battery disposal.**
- **The keyfob is water-resistant; however, if it gets wet, immediately wipe it completely dry.**
- **When changing batteries, do not let dust or oil get on the keyfob.**

FCC Notice:

Changes or modifications not expressly approved by the party responsible for compliance could void the user's authority to operate the equipment.

This device complies with Part 15 of the FCC Rules and RSS-210 of Industry Canada.

Operation is subject to the following two conditions: (1) This device may not cause harmful interference, and (2) this device must accept any interference received, including interference that may cause undesired operation of the device.

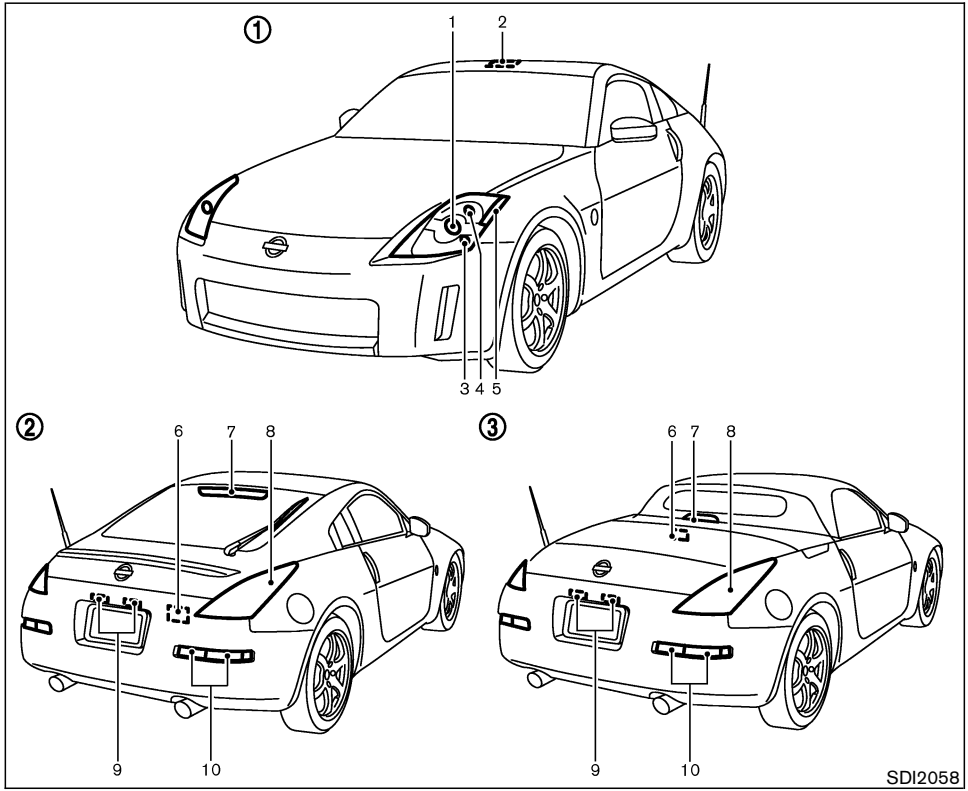

① Front view

1. Headlight (low-beam, high-beam)
2. Spot light
3. Front park light
4. Front turn signal light
5. Front side marker light

② Rear view (Coupe),

③ Rear view (Roadster)

6. Luggage compartment light (Coupe) or Trunk light (Roadster)
7. High-mounted stop light
8. Rear combination light (Side marker, Stop/Tail)
9. License plate lights
10. Rear combination light (Back-up, Turn signal)

HEADLIGHTS

Replacing

If replacement is required, see a NISSAN dealer.

Xenon headlight bulb:

WARNING

HIGH VOLTAGE

When xenon headlights are on, they produce a high voltage. To prevent an electric shock, never attempt to modify or disassemble. Always have your xenon headlights replaced at a NISSAN dealer. For additional information, see "Headlight and turn signal switch" in the "2. Instruments and controls" section.

CAUTION

Use the same number and wattage as originally installed:
Bulb no. (Wattage)
D2S (35W) - Xenon low/high-beam

Fog may temporarily form inside the lens of the exterior lights in the rain or in a car wash. A temperature difference between the inside and the outside of the lens causes the fog. This is not a malfunction. If large drops of water collect inside the lens, contact a NISSAN dealer.

EXTERIOR AND INTERIOR LIGHTS

Item	Wattage (W)	Bulb No.
Front turn signal light*	28/8	3457NA
Front park light*	5	T10
Front side marker light*	(LED)	—
Rear combination light (Upper)		
Stop/Tail*	(LED)	—
Side marker*	(LED)	—
Rear combination light (Lower)		
Back-up*	21	T20
Turn signal*	21	T20
License plate light (x 2)	5	T10
High-mounted stop light*	(LED)	—
Spot light	8	—
Luggage compartment light (Coupe)	5	—
Trunk light (Roadster)*	3.4	—
Vanity mirror light	1.8	—
Cup holder light*	1.1	—
Rear floor box light*	1.4	—

*: See a NISSAN dealer for replacement.

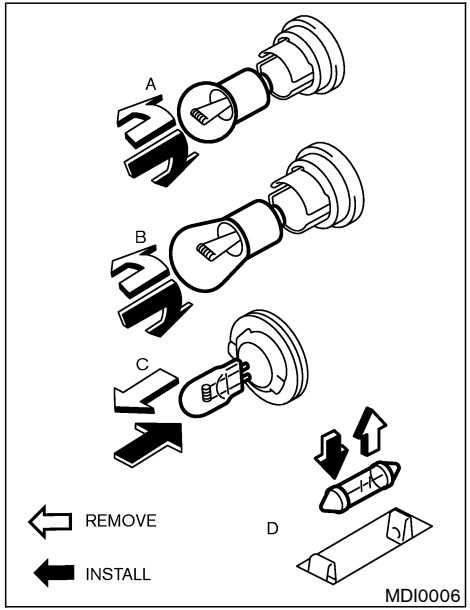

Replacement procedures

All other lights are either type A, B, C or D. When replacing a bulb, first remove the lens and/or cover.

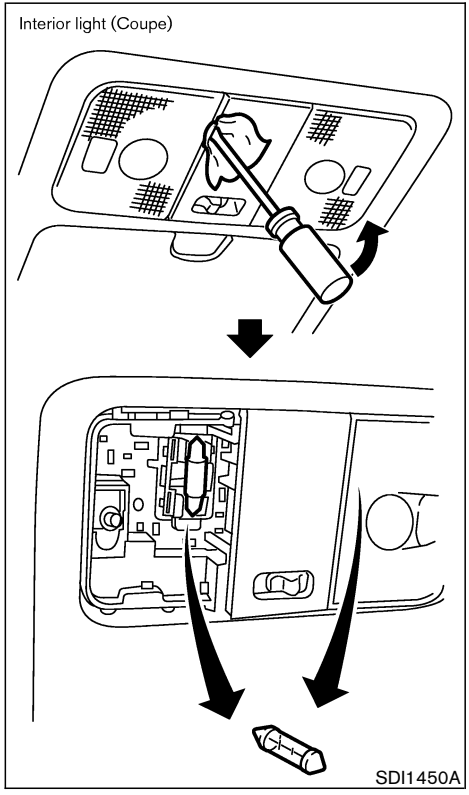

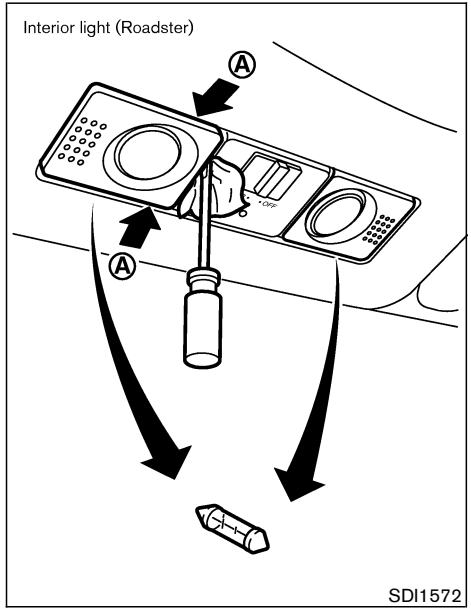

Interior light (Roadster)

Be careful not to snap the nails (A) on the plastic cover when removing it.

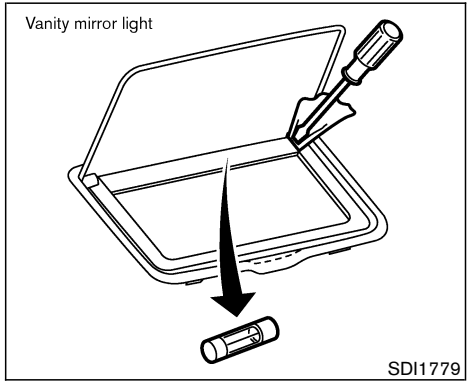

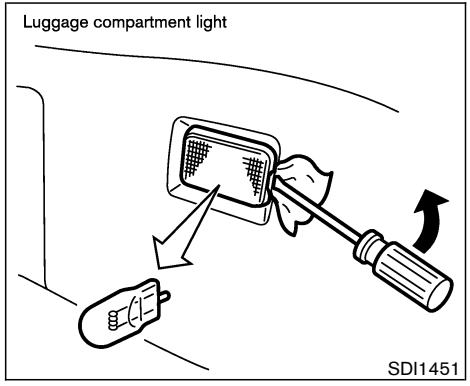

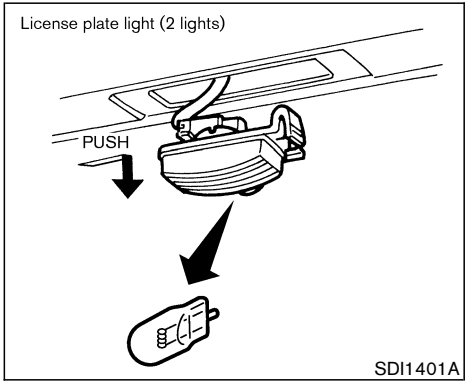

TIRE PRESSURE

Tire pressure monitoring system (TPMS)

This vehicle is equipped with the tire pressure monitoring system (TPMS). It monitors tire pressure of all tires except the spare. When the low tire pressure warning light is lit, one or more of your tires is significantly under-inflated.

The TPMS will activate only when the vehicle is driven at speeds above 16 MPH (25 km/h). Also, this system may not detect a sudden drop in tire pressure (for example a flat tire while driving).

For more details, refer to “Low tire pressure warning light” in the “2. Instruments and controls” section, “Tire pressure monitoring system (TPMS)” in the “5. Starting and driving” section, and “Flat tire” in the “6. In case of emergency” section.

Tire inflation pressure

Check the tire pressures (including the spare) often and always prior to long distance trips. The recommended tire pressure specifications are shown on the Tire and Loading Information label under the “COLD TIRE PRESSURE” heading. The Tire and Loading Information label is affixed to the driver side center pillar. Tire pressures should be checked regularly because:

- Most tires naturally lose air over time.
- Tires can lose air suddenly when driven over potholes or other objects or if the vehicle strikes a curb while parking.

The tire pressures should be checked when the tires are cold. The tires are considered COLD after the vehicle has been parked for 3 or more hours, or driven less than 1 mile (1.6 km) at moderate speeds.

Incorrect tire pressure, including under inflation, may adversely affect tire life and vehicle handling.

WARNING

- **Improperly inflated tires can fail suddenly and cause an accident.**
- **The Gross Vehicle Weight Rating (GVWR) is located on the F.M.V.S.S./C.M.V.S.S. label. The vehicle weight capacity is indicated on the Tire and Loading Information label. Do not load your vehicle beyond this capacity. Overloading your vehicle may result in reduced tire life, unsafe operating conditions due to premature tire failure, or unfavorable handling characteristics and could also lead to a serious accident. Loading beyond the specified capacity may also result in failure of other vehicle components.**
- **Before taking a long trip, or whenever you heavily load your vehicle, use a tire pressure gauge to ensure that the tire pressures are at the specified level.**
- **Do not drive your vehicle over 85 MPH (137 km/h) unless it is equipped with high speed rated tires. Driving faster than 85 MPH (137 km/h) may result in tire failure, loss of control and possible injury.**
- **For additional information regarding tires, refer to "Important Tire Safety Information" (US) or "Tire Safety Information" (Canada) in the Warranty Information Booklet.**

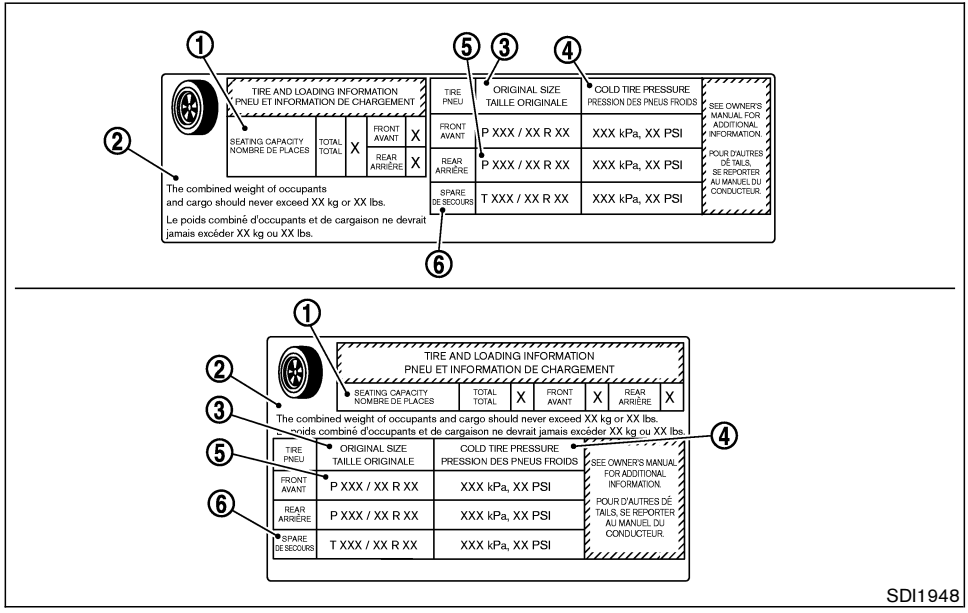

Tire and loading information label

① Seating capacity: The maximum number of occupants that can be seated in the vehicle.

② Vehicle load limit: See loading information in the “Technical and consumer information” section.

③ Original size: The size of the tires originally installed on the vehicle at the factory.

④ Cold tire pressure: Inflate the tires to this pressure when the tires are cold. Tires are considered COLD after the vehicle has been parked for 3 or more hours, or driven less than 1 mile (1.6 km) at moderate speeds. The recommended cold tire inflation is set by the manufacturer to provide the best balance of tire wear, vehicle handling, driveability, tire noise, etc., up to the vehicle’s GVWR.

⑤ Tire size — refer to “Tire labeling” later in this section.

⑥ Spare tire size or compact spare tire size (if so equipped).

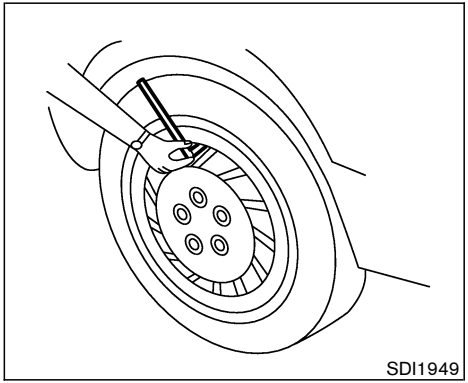

Checking the tire pressure

1. Remove the valve stem cap from the tire.
2. Press the pressure gauge squarely onto the valve stem. Do not press too hard or force the valve stem sideways, or air will escape. If the hissing sound of air escaping from the tire is heard while checking the pressure, reposition the gauge to eliminate this leakage.
3. Remove the gauge.
4. Read the tire pressure on the gauge stem and compare it to the specification shown on the Tire and Loading Information label.
5. Add air to the tire as needed. If too much air is added, press the core of the valve stem briefly with the tip of the gauge stem to release pressure. Recheck the pressure and add or release air as needed.
6. Install the valve stem cap.
7. Check the pressure of all other tires, including the spare.

Coupe model	Size	Cold Tire Inflation Pressure
Front Original Tire	225/45R18 245/40R18	240 kPa (35 psi)
Rear Original Tire	245/45R18 265/35R19	240 kPa (35 psi)
Spare Tire	T145/80D17	420 kPa (60 psi)

Roadster model	Size	Cold Tire Inflation Pressure
Front Original Tire	225/45R18	240 kPa (35 psi)
Rear Original Tire	245/45R18	240 kPa (35 psi)
Spare Tire	T145/80D17	420 kPa (60 psi)

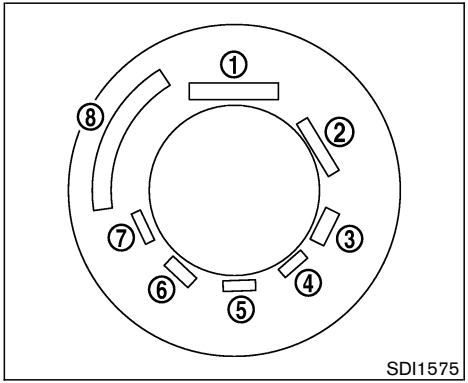

Example

TIRE LABELING

Federal law requires tire manufacturers to place standardized information on the sidewall of all tires. This information identifies and describes the fundamental characteristics of the tire and also provides the tire identification number (TIN) for safety standard certification. The TIN can be used to identify the tire in case of a recall.

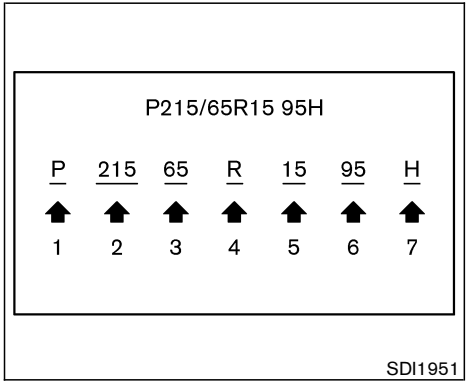

Example

① Tire size (example: P215/65R15 95H)

1. P: The “P” indicates the tire is designed for passenger vehicles. (Not all tires have this information.)
2. Three-digit number (215): This number gives the width in millimeters of the tire from sidewall edge to sidewall edge.
3. Two-digit number (65): This number, known as the aspect ratio, gives the tire’s ratio of height to width.
4. R: The “R” stands for radial.
5. Two-digit number (15): This number is the wheel or rim diameter in inches.
6. Two- or three-digit number (95): This number is the tire’s load index. It is a measurement of how much weight each tire can support. You may not find this information on all tires because it is not required by law.
7. Tire Speed Rating. You should not drive the vehicle faster than the tire speed rating.

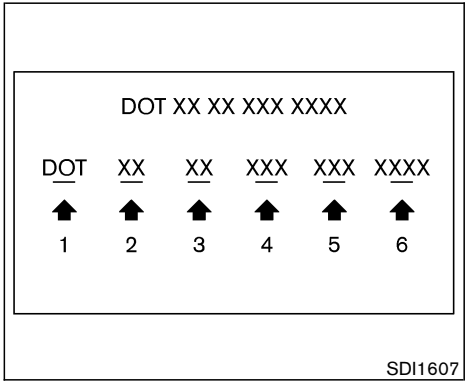

Example

② TIN (Tire Identification Number) for a new tire (example: DOT XX XX XXX XXXX)

1. DOT: Abbreviation for the “Department of Transportation”. The symbol can be placed above, below or to the left or right of the Tire Identification Number.
2. Two-digit code: Manufacturer’s identification mark
3. Two-digit code: Tire size
4. Three-digit code: Tire type code (Optional)
5. Three-digit code: Date of Manufacture
6. Four numbers represent the week and year the tire was built. For example, the numbers 3103 means the 31st week of 2003. If these numbers are missing, then look on the other sidewall of the tire.

③ Tire ply composition and material
The number of layers or plies of rubber-coated fabric in the tire. Tire manufacturers also must indicate the materials in the tire, which include steel, nylon, polyester, and others.

④ Maximum permissible inflation pressure
This number is the greatest amount of air pressure that should be put in the tire. Do not exceed the maximum permissible inflation pressure.

⑤ Maximum load rating
This number indicates the maximum load in kilograms and pounds that can be carried by the tire. When replacing the tires on the vehicle, always use a tire that has the same load rating as the factory installed tire.

⑥ Term of “tubeless” or “tube type”
Indicates whether the tire requires an inner tube (“tube type”) or not (“tubeless”).

⑦ The word “radial”
The word “radial” is shown if the tire has radial structure.

⑧ Manufacturer or brand name
Manufacturer or brand name is shown.

Other tire-related terminology:

In addition to the many terms that are defined throughout this section, Intended Outboard Sidewall is (1) the sidewall that contains a whitewall, bears white lettering or bears manufacturer, brand, and/or model name molding that is higher or deeper than the same molding on the

other sidewall of the tire, or (2) the outward facing sidewall of an asymmetrical tire that has a particular side that must always face outward when mounted on a vehicle.

TYPES OF TIRES

WARNING

- **When changing or replacing tires, be sure all four tires are of the same type (i.e., Summer, All Season or Snow) and construction. A NISSAN dealer may be able to help you with information about tire type, size, speed rating and availability.**
- **Replacement tires may have a lower speed rating than the factory equipped tires, and may not match the potential maximum vehicle speed. Never exceed the maximum speed rating of the tire.**
- **Replacing tires with those not originally specified by NISSAN could affect the proper operation of the tire pressure monitoring system (TPMS).**
- **For additional information regarding tires, refer to "Important Tire Safety Information" (US) or "Tire Safety Information" (Canada) in the Warranty Information Booklet.**

All season tires

NISSAN specifies all season tires on some models to provide good performance for use all year round, including snowy and icy road conditions. All season tires are identified by ALL SEASON and/or M&S on the tire sidewall. Snow tires have better snow traction than all season tires and may be more appropriate in some areas.

Summer tires

NISSAN specifies summer tires on some models to provide superior performance on dry roads. Summer tire performance in snow and ice will be substantially reduced. Summer tires do not have the tire traction rating M&S on the tire sidewall.

If you operate your vehicle in snowy or icy conditions, NISSAN recommends the use of snow or all season tires on all four wheels.

Snow tires

If snow tires are needed, it is necessary to select tires equivalent in size and load rating to the original equipment tires. If you do not, it can adversely affect the safety and handling of your vehicle.

Generally, snow tires will have lower speed ratings than factory equipped tires and may not match the potential maximum vehicle speed. Never exceed the maximum speed rating of the tire.

If you operate your vehicle in snowy or icy conditions, NISSAN recommends the use of snow or all season tires on all four wheels.

For additional traction on icy roads, studded tires may be used. However, some provinces and states prohibit their use. Check local, state and provincial laws before installing studded tires. Skid and traction capabilities of studded snow tires, on wet or dry surfaces, may be poorer than that of non-studded snow tires.

TIRE CHAINS

CAUTION

Tire chains/cables should not be installed on 265/35R19 size tires. Installation of the tire chains/cables on 265/35R19 size tires will cause damage to the vehicle. If you plan to use tire chains/cables, you should install 245/45R18 size tires on your vehicle.

Use of tire chains may be prohibited according to location. Check the local laws before installing tire chains. When installing tire chains, make sure they are of proper size for the tires on your vehicle and are installed according to the chain manufacturer's suggestions. **Use only SAE class "S" chains.** Class "S" chains are used on vehicles with restricted tire to vehicle clearance. Vehicles that can use Class "S" chains are designed to meet the SAE standard minimum clearances between the tire and the closest vehicle suspension or body component required to accommodate the use of a winter traction device (tire chains or cables). The minimum clearances are determined using the factory equipped tire size. Other types may damage your vehicle. Use chain tensioners when recommended by the tire chain manufacturer to ensure a tight fit. Loose end links of the tire chain must be secured or removed to prevent the possibility of whipping action damage to the fenders or undercarriage. If possible, avoid fully loading your vehicle when using tire chains. In addition, drive at a reduced speed. Otherwise, your vehicle may be damaged and/or vehicle handling and performance may be adversely affected.

- **Never install the tire chains on a T-type spare tire.**
- **Do not use the tire chains on dry roads.**
- **Tire chains must be installed only on the rear wheels and not on the front wheels.**

CHANGING WHEELS AND TIRES

Tire rotation

Tires cannot be rotated in this vehicle, as front tires are different size from rear tires and the direction of wheel rotation is fixed in each tire.

A pin is on the front brake rotor to prevent the rear wheels from being installed in place of the front wheels. The spare tire can be installed in place of the front and rear wheels. When installing the spare tire in the front wheel, the hole in the spare tire wheel must be aligned with the pin on the brake rotor.

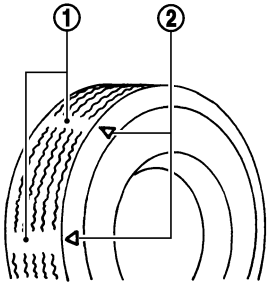

SDI1663

1. Wear indicator
2. Wear indicator location mark

Tire wear and damage

WARNING

- **Tires should be periodically inspected for wear, cracking, bulging or objects caught in the tread. If excessive wear, cracks, bulging or deep cuts are found, the tire(s) should be replaced.**
- **The original tires have built-in tread wear indicators. When the wear indicators are visible, the tire(s) should be replaced.**
- **Tires degrade with age and use. Have tires, including the spare, over 6 years old checked by a qualified technician because some tire damage may not be obvious. Replace the tires as necessary to prevent tire failure and possible personal injury.**
- **Improper service of the spare tire may result in serious personal injury. If it is necessary to repair the spare tire, contact a NISSAN dealer.**
- **For additional information regarding tires, refer to "Important Tire Safety Information" (US) or "Tire Safety Information" (Canada) in the Warranty Information Booklet.**

Replacing wheels and tires

When replacing a tire, use the same size, speed rating and load carrying capacity as originally equipped. See "Specifications" in the "9. Technical and consumer information" section for recommended types and sizes of tires and wheels.

WARNING

- **The use of tires other than those recommended or the mixed use of tires of different brands, construction (bias, bias-belted or radial), or tread patterns can adversely affect the ride, braking, handling, ground clearance, body-to-tire clearance, tire chain clearance, speedometer calibration, headlight aim and bumper height. Some of these effects may lead to accidents and could result in serious personal injury.**
- **If the wheels are changed for any**

reason, always replace with wheels which have the same off-set dimension. Wheels of a different off-set could cause premature tire wear, possibly degraded vehicle handling characteristics and/or interference with the brake discs/drums. Such interference can lead to decreased braking efficiency and/or early brake pad/shoe wear.

- **When a spare tire is mounted or a wheel is replaced, the TPMS will not function and the low tire pressure warning light will flash for approximately 1 minute. The light will remain on after the 1 minute. Contact your NISSAN dealer as soon as possible for tire replacement and/or system resetting.**
- **Replacing tires with those not originally specified by NISSAN could affect the proper operation of the TPMS.**
- **Do not install a deformed wheel or tire even if it has been repaired. Such wheels or tires could have structural damage and could fail without warning.**
- **The use of retread tire is not recommended.**
- **For additional information regarding tires, refer to "Important Tire Safety Information" (US) or "Tire Safety Information" (Canada) in the Warranty Information Booklet.**

Wheel balance

Unbalanced wheels may affect vehicle handling and tire life. Even with regular use, wheels can get out of balance. Therefore, they should be balanced as required.

Wheel balance service should be performed with the wheels off the vehicle. Spin balancing the front wheels on the vehicle could lead to transmission damage.

For additional information regarding tires, refer to "Important Tire Safety Information" (US) or "Tire Safety Information" (Canada) in the Warranty Information booklet.

Care of wheels

- Wash the wheels when washing the vehicle to maintain their appearance.
- Clean the inner side of the wheels when the wheel is changed or the underside of the vehicle is washed.
- Do not use abrasive cleaners when washing the wheels.
- Inspect wheel rims regularly for dents or corrosion. Such damage may cause loss of pressure or poor seal at the tire bead.
- NISSAN recommends that the road wheels be waxed to protect against road salt in areas where it is used during winter.

Spare tire (T-type spare tire)

Observe the following precautions if the T-type spare tire must be used, otherwise your vehicle could be damaged or involved in an accident.

CAUTION

- **The T-type spare tire should be used for emergency use only. It should be replaced by the standard tire at the first opportunity.**

- **Drive carefully while the T-type spare tire is installed.**
  Avoid sharp turns and abrupt braking while driving.
- **Periodically check the T-type spare tire inflation pressure, and always keep it at 60 psi (420 kPa, 4.2 bar).**
- **Do not drive your vehicle at speeds faster than 50 MPH (80 km/h).**
- **Do not use tire chains on a T-type spare tire. Tire chains will not fit properly on the T-type spare tire and may cause damage to the vehicle.**
- **Tire tread of the T-type spare tire will wear at a faster rate than the standard tire. Replace the T-type spare tire as soon as the tread wear indicators appear.**
- **Because the T-type spare tire is smaller than the original tire, ground clearance is reduced. To avoid damage to the vehicle, do not drive over obstacles. Also, do not drive the vehicle through an automatic car wash since it may get caught.**
- **Do not use the T-type spare tire on other vehicles.**
- **Do not use more than one T-type spare tire at the same time.**
- **Do not tow a trailer while the T-type spare tire is installed.**

MEMO

9 Technical and consumer information

Capacities and recommended fuel/lubricants 9-2
Fuel recommendation 9-3
Engine oil and oil filter recommendation 9-5
Air conditioner system refrigerant and lubricant recommendations 9-6
Specifications 9-7
Engine 9-7
Wheels and tires 9-8
Dimensions and weights 9-8
When traveling or registering your vehicle in another country 9-9
Vehicle identification 9-9
Vehicle identification number (VIN) plate 9-9
Vehicle identification number (chassis number) 9-9
Engine serial number 9-10
F.M.V.S.S./C.M.V.S.S. certification label 9-10
Emission control information label 9-10
Tire and loading information label 9-11
Air conditioner specification label 9-11
Installing front license plate 9-12
Vehicle loading information 9-13
Terms 9-13
Vehicle load capacity 9-14
Loading tips 9-16
Measurement of weights 9-16
Towing a trailer 9-17
Maximum load limits 9-17
Towing safety 9-18
Flat towing 9-21
Automatic transmission 9-22
Manual transmission 9-22
Uniform tire quality grading 9-22
Emission control system warranty 9-23
Reporting safety defects (US only) 9-23
Readiness for inspection/maintenance (I/M) test (US only) 9-24
Event data recorders 9-25
Owner's Manual/Service Manual order information ... 9-25
In the event of a collision 9-26

CAPACITIES AND RECOMMENDED FUEL/ LUBRICANTS

The following are approximate capacities. The actual refill capacities may be a little different. When refilling, follow the procedure instructed in the “8. Maintenance and do-it-yourself” section to determine the proper refill capacity.

	Capacity (Approximate)			Recommended specifications
	US measure	Imp measure	Liter	
Fuel	20 gal	16-5/8 gal	76	Unleaded premium gasoline with an octane rating of at least 91 AKI (RON 96)*1
Engine oil (Drain and refill)*2				
With oil filter change	5-1/8 qt	4-3/8 qt	4.9	• Engine oil with API Certification Mark*3 • Viscosity SAE 5W-30
Without oil filter change	4-7/8 qt	4 qt	4.6	
Cooling system				
With reservoir	9-1/2 qt	7-7/8 qt	9.0	50% Genuine NISSAN Long Life Antifreeze/Coolant or equivalent 50% Demineralized or distilled water
Reservoir	7/8 qt	3/4 qt	0.8	
Automatic transmission fluid	—	—	—	Genuine NISSAN Matic J ATF*4
Manual transmission gear oil	—	—	—	Genuine NISSAN Manual Transmission Fluid (MTF) HQ Multi 75W-85 or API GL-4, Viscosity SAE 75W-85 or 75W-90
Differential gear oil	—	—	—	Genuine NISSAN Differential Oil Hypoid Super GL-5 80W-90 or API GL-5, Viscosity SAE 80W-90*5
Power steering fluid (PSF)	Refill to the proper fluid level according to the instructions in the “8. Maintenance and do-it-yourself” section.			Genuine NISSAN PSF or equivalent*6
Brake and clutch fluid				Genuine NISSAN Super Heavy Duty Brake Fluid*7 or equivalent DOT 3
Multi-purpose grease	—	—	—	NLGI No. 2 (Lithium soap base)
Air conditioning system refrigerant	—	—	—	HFC-134a (R-134a)*8
Air conditioning system lubricants	—	—	—	NISSAN A/C System Oil Type S or exact equivalent
Windshield washer fluid	—	—	—	Genuine NISSAN Windshield Washer Concentrate Cleaner & Anti-freeze or equivalent

*1: For additional information, see “Fuel recommendation” later in this section.
*2: For additional information, see “Engine oil” in the “8. Maintenance and do-it-yourself” section for changing engine oil.
*3: For additional information, see “Engine oil and oil filter recommendation” later in this section.
*4: **Using automatic transmission fluid other than Genuine NISSAN Matic J ATF will cause deterioration in driveability and automatic transmission durability, and may damage the automatic transmission, which is not covered by the NISSAN new vehicle limited warranty.**
*5: For hot areas, viscosity SAE 90 is suitable for ambient temperatures above 32°F (0°C).
*6: DEXRON™ VI or equivalent ATF may also be used. For Canada, NISSAN Automatic Transmission Fluid (ATF) is available.
*7: Available in mainland US through a NISSAN dealer.
*8: For additional information, see “Vehicle identification” in this section for air conditioner specification label.

FUEL RECOMMENDATION

Use unleaded premium gasoline with an octane rating of at least 91 AKI (Anti-Knock Index) number (Research octane number 96).

If premium gasoline is not available, unleaded regular gasoline with an octane rating of 87 AKI number (Research octane number 91) may be temporarily used, but only under the following precautions:

- Have the fuel tank filled only partially with unleaded regular gasoline, and fill up with unleaded premium gasoline as soon as possible.
- Avoid full throttle driving and abrupt acceleration.

However, for maximum vehicle performance, the use of unleaded premium gasoline is recommended.

CAUTION

- **Using a fuel other than that specified could adversely affect the emission control system, and may also affect the warranty coverage.**
- **Under no circumstances should a leaded gasoline be used, because this will damage the three-way catalyst.**
- **Do not use E-85 fuel in your vehicle. Your vehicle is not designed to run on E-85 fuel. Using E-85 fuel can damage the fuel system components and is not covered by the NISSAN vehicle limited warranty.**

Gasoline specifications

NISSAN recommends using gasoline that meets the World-Wide Fuel Charter (WWFC) specifications where it is available. Many of the automobile manufacturers developed this specification to improve emission control system and vehicle performance. Ask your service station manager if the gasoline meets the WWFC specifications.

Reformulated gasoline

Some fuel suppliers are now producing reformulated gasolines. These gasolines are specially designed to reduce vehicle emissions. NISSAN supports efforts towards cleaner air and suggests that you use reformulated gasoline when available.

Gasoline containing oxygenates

Some fuel suppliers sell gasoline containing oxygenates such as ethanol, MTBE and methanol with or without advertising their presence. NISSAN does not recommend the use of fuels of which the oxygenate content and the fuel compatibility for your NISSAN cannot be readily determined. If in doubt, ask your service station manager.

If you use oxygenate-blend gasoline, please take the following precautions as the usage of such fuels may cause vehicle performance problems and/or fuel system damage.

- **The fuel should be unleaded and have an octane rating no lower than that recommended for unleaded gasoline.**
- **If an oxygenate-blend, excepting a methanol blend, is used, it should contain no more than 10% oxygenate. (MTBE may, however, be added up to 15%.)**
- **If a methanol blend is used, it should contain no more than 5% methanol (methyl alcohol, wood alcohol). It should also contain a suitable amount of appropriate cosolvents and corrosion in-**

hibitors. If not properly formulated with appropriate cosolvents and corrosion inhibitors, such methanol blends may cause fuel system damage and/or vehicle performance problems. At this time, sufficient data is not available to ensure that all methanol blends are suitable for use in NISSAN vehicles.

If any undesirable driveability problems such as engine stalling and hard hot starting are experienced after using oxygenate-blend fuels, immediately change to a non-oxygenate fuel or a fuel with a low blend of MTBE.

Take care not to spill gasoline during refueling. Gasoline containing oxygenates can cause paint damage.

E-85 fuel

E-85 fuel is a mixture of approximately 85% fuel ethanol and 15% unleaded gasoline. E-85 can only be used in a Flexible Fuel Vehicle (FFV). Do not use E-85 fuel in your vehicle. U.S. government regulations require fuel ethanol dispensing pumps to be identified by a small, square, orange and black label with the common abbreviation or the appropriate percentage for that region.

Aftermarket fuel additives

NISSAN does not recommend the use of any aftermarket fuel additives (for example, fuel injector cleaner, octane booster, intake valve deposit removers, etc.) which are sold commercially. Many of these additives intended for gum, varnish or deposit removal may contain active solvents or similar ingredients that can be harmful to the fuel system and engine.

Octane rating tips

Using unleaded gasoline with an octane rating lower than recommended can cause persistent, heavy spark knock. (Spark knock is a metallic rapping noise.) If severe, this can lead to engine damage. If you detect a persistent heavy spark knock even when using gasoline of the above stated octane rating, or if you hear steady spark knock while holding a steady speed on level roads, have your dealer correct the condition. Failure to correct the condition is misuse of the vehicle, for which NISSAN is not responsible.

Incorrect ignition timing will result in knocking, after-run or overheating. This in turn may cause excessive fuel consumption or damage to the engine. If any of the above symptoms are encountered, have your vehicle checked at a NISSAN dealer or other competent service facility.

However, now and then you may notice light spark knock for a short time while accelerating or driving up hills. This is no cause for concern, because you get the greatest fuel benefit when there is light spark knock for a short time under heavy engine load.

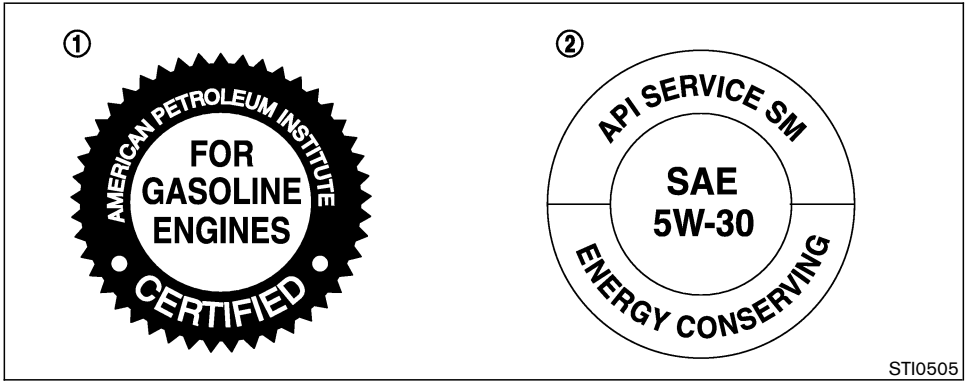

① API certification mark
② API service symbol

ENGINE OIL AND OIL FILTER RECOMMENDATION

Selecting the correct oil

It is essential to choose the correct grade, quality and viscosity engine oil to ensure satisfactory engine life and performance. See “Capacities and recommended fuel/lubricants” earlier in this section. NISSAN recommends the use of an energy conserving oil in order to improve fuel economy.

Select only engine oils that meet the American Petroleum Institute (API) certification or International Lubricant Standardization and Approval Committee (ILSAC) certification and SAE viscosity standard. These oils have the API certification mark on the front of the container. Oils which do not have the specified quality label should not be used as they could cause engine damage.

Oil additives

NISSAN does not recommend the use of oil additives. The use of an oil additive is not necessary when the proper oil type is used and maintenance intervals are followed.

Oil which may contain foreign matter or has been previously used should not be used.

Oil viscosity

The engine oil viscosity or thickness changes with temperature. Because of this, it is important that the engine oil viscosity be selected based on the temperatures at which the vehicle will be operated before the next oil change. Choosing an oil viscosity other than that recommended could cause serious engine damage.

Selecting the correct oil filter

Your new NISSAN vehicle is equipped with a high-quality genuine NISSAN oil filter. When replacing, use a genuine NISSAN oil filter or its equivalent for the reason described in “Change intervals”.

Change intervals

The oil and oil filter change intervals for your engine are based on the use of the specified quality oils and filters. Oil and filter other than the specified quality, or oil and filter change intervals longer than recommended could reduce engine life. Damage to engines caused by improper maintenance or use of incorrect oil and filter quality and/or viscosity is not covered by the new NISSAN vehicle limited warranties.

Your engine was filled with a high quality engine

oil when it was built. You do not have to change the oil before the first recommended change interval. Oil and filter change intervals depend upon how you use your vehicle.

Operation under the following conditions may require more frequent oil and filter changes:

- repeated short distance driving at cold outside temperatures
- driving in dusty conditions
- extensive idling
- towing a trailer
- stop and go commuting

Refer to the “NISSAN Service and Maintenance Guide” for the maintenance schedule.

AIR CONDITIONER SYSTEM REFRIGERANT AND LUBRICANT RECOMMENDATIONS

The air conditioner system in your NISSAN vehicle must be charged with the refrigerant HFC-134a (R-134a) and the lubricant, NISSAN A/C System Oil Type S or the exact equivalents.

CAUTION

The use of any other refrigerant or lubricant will cause severe damage to the air conditioning system and will require the replacement of all air conditioner system components.

The refrigerant HFC-134a (R-134a) in your NISSAN vehicle will not harm the earth’s ozone layer. Although this refrigerant does not affect the earth’s atmosphere, certain governmental regulations require the recovery and recycling of any refrigerant during automotive air conditioner system service. A NISSAN dealer has the trained technicians and equipment needed to recover and recycle your air conditioner system refrigerant.

Contact a NISSAN dealer when servicing your air conditioner system.

SPECIFICATIONS

ENGINE

Model		VQ35HR
Type		Gasoline, 4-cycle
Cylinder arrangement		6-cylinder, V-slanted at 60°
Bore x Stroke	in (mm)	3.760 x 3.205 (95.5 x 81.4)
Displacement	cu in (cm^3)	213.45 (3,498)
Firing order		1-2-3-4-5-6*1
Idle speed	rpm	See the emission control label on the underside of the hood.
Ignition timing (B.T.D.C.)	degree/rpm	
CO percentage at idle speed	[No air] %	
Spark plug	Standard	FXE22HR-11
Spark plug gap (Normal)	in (mm)	0.043 (1.1)
Camshaft operation		Timing chain

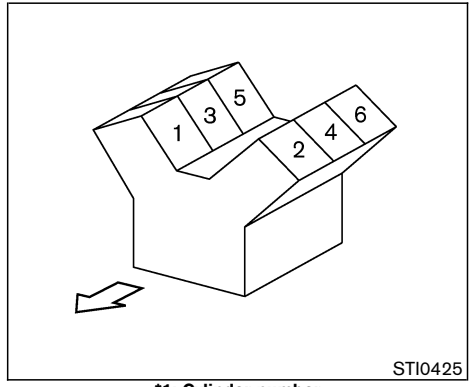

***1: Cylinder number**

The spark ignition system of this vehicle meets all requirements of the Canadian Interference-Causing Equipment Regulations.

WHEELS AND TIRES

Road wheel

Model	Type	Position	Size	Offset in (mm)
Coupe	Aluminum	Front	18 x 8JJ	1.18 (30)
		Rear	18 x 8-1/2JJ	1.30 (33)
		Front	18 x 9JJ*	1.18 (30)
		Rear	19 x 10JJ*	1.18 (30)
Roadster	Aluminum	Front	18 x 8JJ	1.18 (30)
		Rear	18 x 8-1/2JJ	1.30 (33)

Tire

Model	Type	Position	Size	Pressure (COLD)
Coupe	Conventional	Front	225/45R18 91W	240 kPa (35 psi)
		Rear	245/45R18 96W	240 kPa (35 psi)
		Front	245/40R18 93W*	240 kPa (35 psi)
		Rear	265/35R19 94W*	240 kPa (35 psi)
	Spare	—	T145/80D17 107M	420 kPa (60 psi)
Road-ster	Conventional	Front	225/45R18 91W	240 kPa (35 psi)
		Rear	245/45R18 96W	240 kPa (35 psi)
	Spare	—	T145/80D17 107M	420 kPa (60 psi)

*: For option

DIMENSIONS AND WEIGHTS

Vehicle body		Coupe	Roadster
Overall length	in (mm)	169.8 (4,314)	169.8 (4,314)
Overall width	in (mm)	71.5 (1,815)	71.5 (1,815)
Overall height	in (mm)	52.1 (1,323)	52.5 (1,333)
Front tread	in (mm)	60.5 (1,536)	60.5 (1,536)
Rear tread	in (mm)	60.6 (1,540)*1 60.9 (1,546)*2	60.6 (1,540)
Wheelbase	in (mm)	104.3 (2,650)	104.3 (2,650)
Gross vehicle weight rating (GVWR)	lb (kg)	See the F.M.V.S.S. or C.M.V.S.S. certification label on the driver's side lock pillar.	
Gross axle weight rating (GAWR)			
Front	lb (kg)		
Rear	lb (kg)		

*1: For model with 245/45R 18 tires
*2: For model with 265/35R 19 tires

WHEN TRAVELING OR REGISTERING YOUR VEHICLE IN ANOTHER COUNTRY

When planning to travel in another country, you should first find out if the fuel available is suitable for your vehicle's engine.

Using fuel with too low an octane rating may cause engine damage. All gasoline vehicles must be operated with unleaded engine gasoline. Therefore, avoid taking your vehicle to areas where appropriate fuel is not available.

When transferring the registration of your vehicle to another country, state, province or district, it may be necessary to modify the vehicle to meet local laws and regulations.

The laws and regulations for motor vehicle emission control and safety standards vary according to the country, state, province or district; therefore, vehicle specifications may differ.

When any vehicle is to be taken into another country, state, province or district and registered, its modifications, transportation, and registration are the responsibility of the user. NISSAN is not responsible for any inconvenience that may result.

VEHICLE IDENTIFICATION

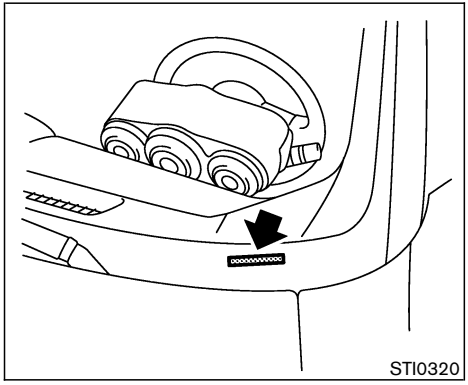

VEHICLE IDENTIFICATION NUMBER (VIN) PLATE

The vehicle identification number plate is attached as shown. This number is the identification for your vehicle and is used in the vehicle registration.

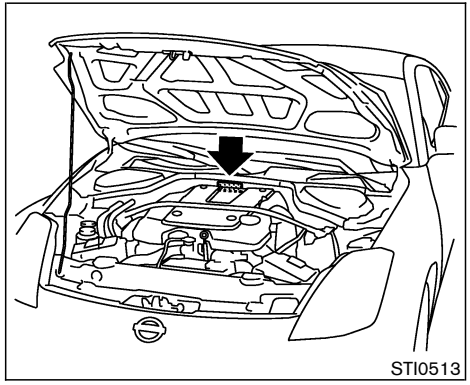

VEHICLE IDENTIFICATION NUMBER (chassis number)

The number is stamped as shown.

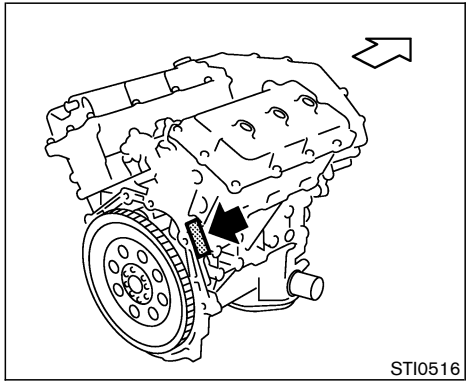

ENGINE SERIAL NUMBER

The number is stamped on the engine as shown.

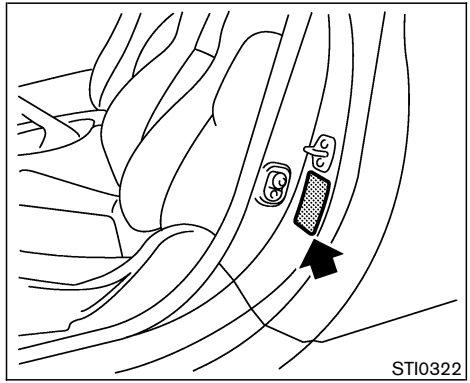

F.M.V.S.S./C.M.V.S.S. CERTIFICATION LABEL

The Federal Motor Vehicle Safety Standards (F.M.V.S.S.) or Canadian Motor Vehicle Safety Standards (C.M.V.S.S.) certification label is affixed as shown. This label contains valuable vehicle information, such as: Gross Vehicle Weight Ratings (GVWR), Gross Axle Weight Rating (GAWR), month and year of manufacture, Vehicle Identification Number (VIN), etc. Review it carefully.

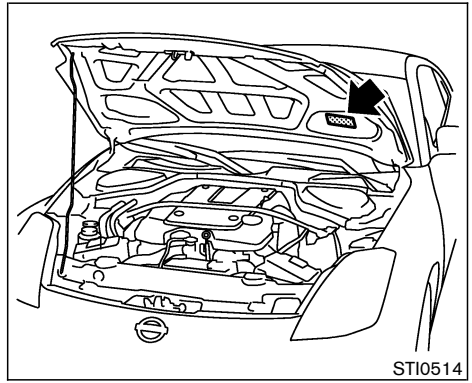

EMISSION CONTROL INFORMATION LABEL

The emission control information label is attached as shown.

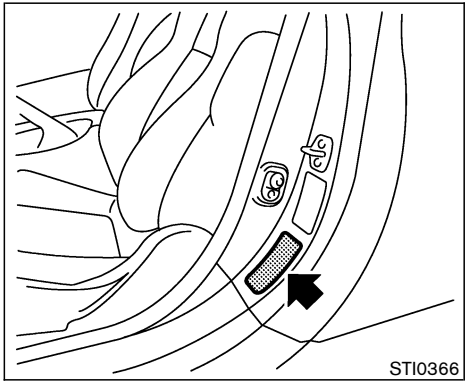

TIRE AND LOADING INFORMATION LABEL

The cold tire inflation pressure is shown on the Tire and Loading Information label affixed to the driver side center pillar.

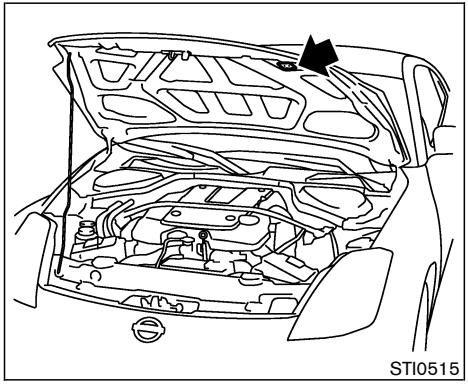

AIR CONDITIONER SPECIFICATION LABEL

The air conditioner specification label is affixed inside of the hood as shown.

INSTALLING FRONT LICENSE PLATE

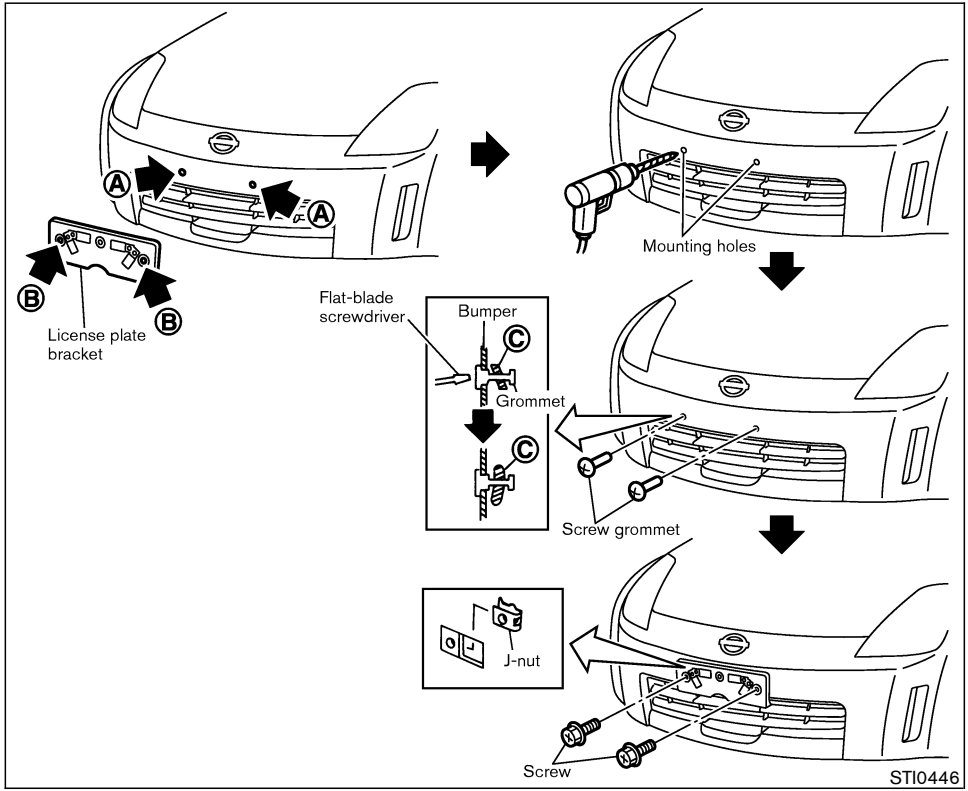

Use the following steps to mount the license plate:

Before mounting the license plate, confirm that the following parts are enclosed in the vinyl bag.

- License plate bracket
- J-nut x 2
- Screw x 2
- Screw grommet x 2

1. Temporarily place the license plate bracket while aligning points Ⓐ of the front bumper fascia with holes Ⓑ in the license plate bracket.
2. Remove the license plate bracket.
3. Carefully drill two shallow pilot holes Ⓐ using a 0.39 in (10 mm) drill bit at the marked locations. **(Be sure that the drill only goes through the fascia, or damage to the nut may occur.)**
4. Insert grommets into the hole on the fascia.
5. Insert a flat-blade screwdriver into the grommet hole to add 90° turn onto the part Ⓒ.
6. Insert a J-nut into the license plate bracket before placing the license plate bracket on the fascia.
7. Install the license plate bracket with screws.

8. Install the license plate with bolts that are no longer than 0.55 in (14 mm).

VEHICLE LOADING INFORMATION

WARNING

- **It is extremely dangerous to ride in a cargo area inside a vehicle. In a collision, people riding in these areas are more likely to be seriously injured or killed.**
- **Do not allow people to ride in any area of your vehicle that is not equipped with seats and seat belts.**
- **Be sure everyone in your vehicle is in a seat and using a seat belt properly.**

TERMS

It is important to familiarize yourself with the following terms before loading your vehicle:

- Curb Weight (actual weight of your vehicle) - vehicle weight including: standard and optional equipment, fluids, emergency tools, and spare tire assembly. This weight **does not** include passengers and cargo.
- GVW (Gross Vehicle Weight) - curb weight plus the combined weight of passengers and cargo.
- GVWR (Gross Vehicle Weight Rating) - maximum total combined weight of the unloaded vehicle, passengers, luggage, hitch, trailer tongue load and any other optional equipment. This information is located on the F.M.V.S.S./C.M.V.S.S. label.
- GAWR (Gross Axle Weight Rating) - maximum weight (load) limit specified for the front or rear axle. This information is located on the F.M.V.S.S./C.M.V.S.S. label.
- GCWR (Gross Combined Weight Rating) - maximum total weight rating of the vehicle, passengers, cargo and trailer.
- Vehicle Capacity Weight, Load limit,

Total load capacity - maximum total weight limit specified of the load (passengers and cargo) for the vehicle. This is the maximum combined weight of occupants and cargo that can be loaded into the vehicle. If the vehicle is used to tow a trailer, the trailer tongue weight must be included as part of the cargo load. This information is located on the Tire and Loading Information label.

- Cargo capacity - permissible weight of cargo, the subtracted weight of occupants from the load limit.

VEHICLE LOAD CAPACITY

Do not exceed the load limit of your vehicle shown as “The combined weight of occupants and cargo” on the Tire and Loading Information label. Do not exceed the number of occupants shown as “Seating Capacity” on the Tire and Loading Information label.

To get “the combined weight of occupants and cargo”, add the weight of all occupants, then add the total luggage weight. Examples are shown in the following illustration.

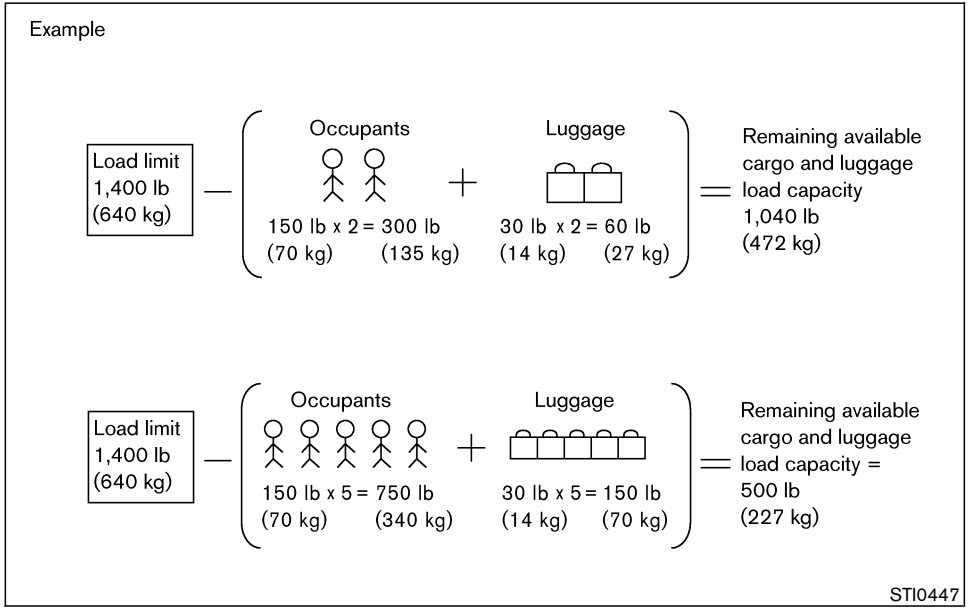

Steps for determining correct load limit

1. Locate the statement “The combined weight of occupants and cargo should never exceed XXX kg or XXX lbs” on your vehicle’s placard.
2. Determine the combined weight of the driver and passengers that will be riding in your vehicle.
3. Subtract the combined weight of the driver and passengers from XXX kg or XXX lbs.
4. The resulting figure equals the available amount of cargo and luggage load capacity. For example, if the XXX amount equals 1400 lbs. and there will be five 150 lb. passengers in your vehicle, the amount of available cargo and luggage load capacity is 650 lbs. (1400 – 750 (5 × 150) = 650 lbs) or (640 – 340 (5 × 70) = 300 kg)
5. Determine the combined weight of luggage and cargo being loaded on the vehicle. That weight may not safely exceed the available cargo and luggage load capacity calculated in Step 4.
6. If your vehicle will be towing a trailer, load from your trailer will be transferred to your vehicle. Consult this manual to determine how this reduces the available cargo and luggage load capacity of your vehicle.

Before driving a loaded vehicle, confirm that you do not exceed the Gross Vehicle Weight Rating (GVWR) or the Gross Axle Weight Rating (GAWR) for your vehicle. See “Measurement of Weights” later in this section.

Also check tires for proper inflation pressures. See the Tire and Loading Information label.

LOADING TIPS

- The GVW must not exceed GVWR or GAWR as specified on the F.M.V.S.S./C.M.V.S.S. certification label.
- Do not load the front and rear axle to the GAWR. Doing so will exceed the GVWR.

WARNING

- **Properly secure all cargo with ropes or straps to help prevent it from sliding or shifting. Do not place cargo higher than the seatbacks. In a sudden stop or collision, unsecured cargo could cause personal injury.**
- **Do not load your vehicle any heavier than the GVWR or the maximum front and rear GAWRs. If you do, parts of your vehicle can break, tire damage could occur, or it can change the way your vehicle handles. This could result in loss of control and cause personal injury.**
- **Overloading not only could shorten the life of your vehicle and the tire, but can also cause unsafe vehicle handling and long braking distances. This may cause a premature tire failure, which could result in a serious accident and personal injury. Failures caused by over loading are not covered by the vehicle’s warranty.**

MEASUREMENT OF WEIGHTS

Secure loose items to prevent weight shifts that could affect the balance of your vehicle. When the vehicle is loaded, drive to a scale and weigh the front and the rear wheels separately to determine axle loads. Individual axle loads should not exceed either of the gross axle weight ratings (GAWR). The total of the axle loads should not exceed the gross vehicle weight rating (GVWR). These ratings are given on the vehicle certification label. If weight ratings are exceeded, move or remove items to bring all weights below the ratings.

TOWING A TRAILER

Roadster model:

Do not tow a trailer with your vehicle.

Coupe model:

Your new vehicle was designed to be used primarily to carry passengers and cargo. Remember that towing a trailer places additional loads on your vehicle's engine, drive train, steering, braking and other systems.

A NISSAN Towing Guide (U.S. only) is available on the website at www.nissanusa.com. This guide includes information on trailer towing capability and the special equipment required for proper towing.

WARNING

Overloading or improper loading of a trailer and its cargo can adversely affect vehicle handling, braking and performance and may lead to accidents.

CAUTION

- **Do not tow a trailer or haul a heavy load for the first 500 miles (800 km).**

  Your engine, axle or other parts could be damaged.

- **For the first 500 miles (800 km) that you tow a trailer, do not drive over 50 mph (80 km/h) and do not make starts at full throttle. This helps the engine and other parts of your vehicle wear in at the heavier loads.**

MAXIMUM LOAD LIMITS

Maximum trailer loads

Never allow the total trailer load to exceed 1,000 lb (454 kg). The total trailer load equals trailer weight plus its cargo weight. Towing loads greater than 1,000 lb (454 kg) or using improper towing equipment could adversely affect vehicle handling, braking and performance.

The ability of a vehicle to tow a trailer is not only related to the maximum trailer loads, but also the places you plan to tow. Tow weights appropriate for level highway driving may have to be reduced on very steep grades or in low traction situations (for example, on slippery boat ramps).

CAUTION

Vehicle damage resulting from improper towing procedures are not covered by NISSAN warranties.

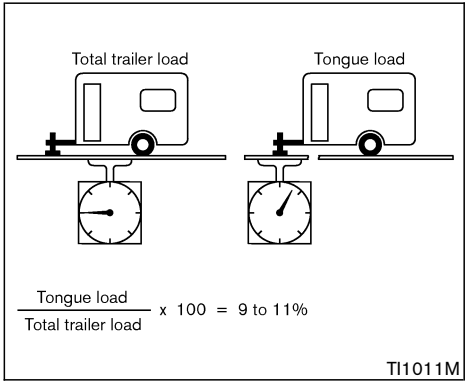

Tongue load

Keep the tongue load between 9 and 11% of the total trailer load within the maximum tongue load limits shown in the following Towing Load/Specification chart. If the tongue load becomes excessive, rearrange cargo to allow for proper tongue load.

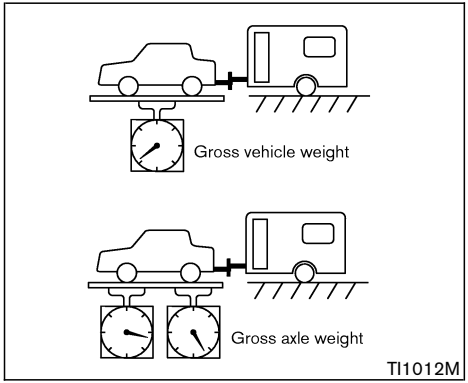

Maximum gross vehicle weight/ maximum gross axle weight

The gross vehicle weight of the towing vehicle must not exceed. GVWR shown on the F.M.V.S.S./C.M.V.S.S. certification label. The gross vehicle weight equals the combined weight of the unloaded vehicle, passengers, luggage, hitch, trailer tongue load and any other optional equipment. In addition, front or rear gross axle weight must not exceed GAWR shown on the F.M.V.S.S./C.M.V.S.S. certification label.

TOWING LOAD/SPECIFICATION CHART Unit: lb (kg)	
MAXIMUM TOWING LOAD	1,000 (454)
MAXIMUM TONGUE LOAD	100 (45.4)

TOWING SAFETY

Trailer hitch

Choose a proper hitch for a vehicle and trailer. Make sure the trailer hitch is securely attached to the vehicle, to help avoid personal injury or property damage due to sway caused by cross-winds, rough road surfaces or passing trucks.

Hitch ball

Choose a hitch ball of the proper size and weight rating for your trailer:

- The required hitch ball size is stamped on most trailer couplers. Most hitch balls also have the size printed on top of the ball.
- Choose the proper class hitch ball based on the trailer weight.
- The diameter of the threaded shank of the hitch ball must be matched to the ball mount hole diameter. The hitch ball shank should be

no more than 1/16″ smaller than the hole in the ball mount.

- The threaded shank of the hitch ball must be long enough to be properly secured to the ball mount. There should be at least 2 threads showing beyond the lock washer and nut.

Class I hitch

Class I trailer hitch equipment (receiver, ball mount and hitch ball) can be used to tow trailers of a maximum weight of 2,000 lb (909 kg).

You may add Class I trailer hitch equipment to the vehicle that has a 2,000 lb (909 kg) maximum weight rating, but your vehicle is only capable of towing the maximum trailer weights shown in the Towing Load/Specification Chart earlier in this section.

CAUTION

- **Do not use axle-mounted hitches.**
- **The hitch should not be attached to or affect the operation of the impact-absorbing bumper.**
- **Do not modify the vehicle exhaust system, brake system, etc. to install a trailer hitch.**
- **To reduce the possibility of additional damage if a vehicle is struck from the rear, where practical, remove the hitch and/or receiver when not in use.**
- **After the hitch is removed, seal the bolt holes to prevent exhaust fumes, water or dust from entering the passenger compartment.**
- **Regularly check that all trailer hitch mounting bolts are securely mounted.**

Tire pressures

- When towing a trailer, inflate the vehicle tires to the recommended cold tire pressure indicated on the Tire and Loading Information label.
- Trailer tire condition, size, load rating and proper inflation pressure should be in accordance with the trailer and tire manufacturers' specifications.

Safety chains

Always use a suitable chain between a vehicle and the trailer. The safety chain should be crossed and should be attached to the hitch, not to the vehicle bumper or axle. Be sure to leave enough slack in the chain to permit turning corners.

Trailer lights

CAUTION

When splicing into the vehicle electrical system, a commercially available power-type module/converter must be used to provide power for all trailer lighting. This unit uses the vehicle battery as a direct power source for all trailer lights while using the vehicle tail light, stoplight and turn signal circuits as a signal source. The module/converter must draw no more than 15 milliamps from the stop and tail lamp circuits. Using a module/converter that exceeds these power requirements may damage the vehicle's electrical system. See a reputable trailer dealer to obtain

the proper equipment and to have it installed.

Trailer lights should comply with federal and/or local regulations. When wiring the vehicle for towing, connect the stop and tail light pickup into the vehicle electrical circuit at a point between the sensor and stop light or light switch.

Trailer brakes

If your trailer is equipped with a braking system, make sure it conforms to federal and/or local regulations and that it is properly installed.

WARNING

Never connect a trailer brake system directly to the vehicle brake system.

Pre-towing tips

- Be certain a vehicle maintains a level position when a loaded and/or unloaded trailer is hitched. Do not drive the vehicle if it has an unusual nose-up or nose-down condition; check for improper tongue load, overload, worn suspension or other possible causes of these conditions.
- Always secure items in the trailer to prevent load shifts while driving.
- Load the trailer so approximately 60% of the trailer load is in the front half and 40% is in the back half.
- Check your hitch, trailer tire pressure, vehicle tire pressure, trailer light operation, and trailer wheel lug nuts every time you attach a trailer to the vehicle.
- Be certain your rear view mirrors conform to all federal, state and/or local regulations. If not, install any mirrors required for towing before driving the vehicle.

Trailer towing tips

In order to gain skill and an understanding of the vehicle's behavior, you should practice turning, stopping and backing up in an area which is free from traffic. Steering stability, and braking performance will be somewhat different than under normal driving conditions.

- Always secure items in the trailer to prevent load shift while driving.
- Avoid abrupt starts, acceleration or stops.
- Avoid sharp turns or lane changes.
- Always drive a vehicle at a moderate speed. Some states or provinces have specific speed limits for vehicles that are towing trailers. Obey the local speed limits.
- When backing up, hold the bottom of the steering wheel with one hand. Move your hand in the direction in which you want the trailer to go. Make small corrections and back up slowly. If possible, have someone guide you when you are backing up.
- Always block the wheels on both vehicle and trailer when parking. Parking on a slope is not recommended; however, if you must do so, and if a vehicle is equipped with automatic transmission, first apply the parking brake and block the wheels, and then move the transmission selector lever into the P (Park) position. If you move the selector lever to the P (Park) position before blocking the wheels and applying the parking brake, the transmission may get damaged.
- When going down a hill, shift into a lower gear and use the engine braking effect. When going up a long grade, downshift the transmission to a lower gear and reduce speed to reduce chances of engine overloading and/or overheating.
- If the engine coolant rises to an extremely high temperature when the air conditioning system is on, turn off the air conditioner. Coolant heat can be additionally vented by

opening the windows, switching the fan control to high and setting the temperature control to the HOT position.

- Trailer towing consumes more fuel than normal circumstances.
- Avoid towing a trailer for the first 500 miles (800 km).
- Have a vehicle serviced more often than at intervals specified in the recommended maintenance schedule.
- When making a turn, your trailer wheels will be closer to the inside of the turn than your vehicle wheels. To compensate for this, make a larger than normal turning radius during the turn.
- Crosswinds and rough roads will adversely affect vehicle/trailer handling, possibly causing vehicle sway. When being passed by larger vehicles, be prepared for possible changes in crosswinds that could affect vehicle handling. If swaying does occur, firmly grip the steering wheel, steer straight ahead, and immediately (but gradually) reduce vehicle speed. This combination will help stabilize the vehicle. Never increase speed.
- Be careful when passing other vehicles. Passing while towing a trailer requires considerably more distance than normal passing. Remember the length of the trailer must also pass the other vehicle before you can safely change lanes.
- To maintain engine braking efficiency and electrical charging performance, do not use 6th gear (manual transmission) or 5th position (automatic transmission).
- Avoid holding the brake pedal down too long or too frequently. This could cause the brakes to overheat, resulting in reduced braking efficiency.
- Increase your following distance to allow for greater stopping distances while towing a trailer. Anticipate stops and brake gradually.
- Do not use cruise control while towing a trailer.
- Check your hitch, trailer wiring harness connections, and trailer wheel lug nuts after 50 miles (80 km) of travel and at every break.
- When stopped in traffic for long periods of time in hot weather, put the vehicle in the P (Park) position.

When towing a trailer, change transmission oil more frequently. For additional information, see the “8. Maintenance and do-it-yourself” section.

FLAT TOWING

Towing your vehicle with all four wheels on the ground is sometimes called flat towing. This method is sometimes used when towing a vehicle behind a recreational vehicle, such as a motor home.

CAUTION

- **Failure to follow these guidelines can result in severe transmission damage.**
- **Whenever flat towing your vehicle, always tow forward, never backward.**
- **DO NOT tow any automatic transmission vehicle with all four wheels on the ground (flat towing). Doing so WILL DAMAGE internal transmission parts due to lack of transmission lubrication.**
- **For emergency towing procedures, refer to “Towing recommended by NISSAN” in the “6. In case of emergency” section of this manual.**

AUTOMATIC TRANSMISSION

To tow a vehicle equipped with an automatic transmission, an appropriate vehicle dolly **MUST** be placed under the towed vehicle's drive wheels. **Always** follow the dolly manufacturer's recommendations when using their product.

MANUAL TRANSMISSION

- Always tow with the manual transmission in Neutral.
- After towing 500 miles, start and idle the engine with the transmission in Neutral for two minutes. Failure to idle the engine after every 500 miles of towing may cause damage to internal transmission parts.

UNIFORM TIRE QUALITY GRADING

DOT (Department Of Transportation) Quality Grades: All passenger car tires must conform to federal safety requirements in addition to these grades.

Quality grades can be found where applicable on the tire sidewall between tread shoulder and maximum section width. For example:

Treadwear 200 Traction AA Temperature A

Treadwear

The treadwear grade is a comparative rating based on the wear rate of the tire when tested under controlled conditions on a specified government test course. For example, a tire graded 150 would wear one and one-half (1 1/2) times as well on the government course as a tire graded 100. The relative performance of tires depends upon the actual conditions of their use, however, and may depart significantly from the norm due to variations in driving habits, service practices and differences in road characteristics and climate.

Traction AA, A, B and C

The traction grades, from highest to lowest, are AA, A, B, and C. Those grades represent the tire's ability to stop on wet pavement as measured under controlled conditions on specified government test surfaces of asphalt and concrete. A tire marked C may have poor traction performance.

WARNING

The traction grade assigned to this tire is based on straight-ahead braking traction tests, and does not include acceleration, cornering, hydroplaning, or peak traction characteristics.

Temperature A, B and C

The temperature grades are A (the highest), B, and C, representing the tire's resistance to the generation of heat and its ability to dissipate heat when tested under controlled conditions on a specified indoor laboratory test wheel. Sustained high temperature can cause the material of the tire to degenerate and reduce tire life, and excessive temperature can lead to sudden tire failure. The grade C corresponds to a level of performance which all passenger car tires must meet under the Federal Motor Safety Standard No. 109. Grades B and A represent higher levels of performance on the laboratory test wheel than the minimum required by law.

WARNING

The temperature grade for this tire is established for a tire that is properly inflated and not overloaded. Excessive speed, under-inflation, or excessive loading, either separately or in combination, can cause heat build-up and possible tire failure.

EMISSION CONTROL SYSTEM WARRANTY

Your NISSAN vehicle is covered by the following emission warranties.

For US:

- Emission Defects Warranty
- Emissions Performance Warranty (See Warranty Information Booklet for details.)

For Canada:

- Emission Control System Warranty

Details of these warranties may be found with other vehicle warranties in your Warranty Information Booklet that comes with your NISSAN vehicle. If you did not receive a Warranty Information Booklet, or it has become lost, you may obtain a replacement by writing to:

- Nissan North America, Inc.
  Consumer Affairs Department
  P.O. Box 685003
  Franklin, TN 37068-5003
- Nissan Canada Inc.
  5290 Orbitor Drive
  Mississauga, Ontario, L4W 4Z5

REPORTING SAFETY DEFECTS (US only)

If you believe that your vehicle has a defect which could cause a crash or could cause injury or death, you should immediately inform the National Highway Traffic Safety Administration (NHTSA) in addition to notifying NISSAN.

If NHTSA receives similar complaints, it may open an investigation, and if it finds that a safety defect exists in a group of vehicles, it may order a recall and remedy campaign. However, NHTSA cannot become involved in individual problems between you, your dealer, or NISSAN.

To contact NHTSA, you may call the Vehicle Safety Hotline toll-free at 1-888-327-4236 (TTY: 1-800-424-9153); go to http://www.safercar.gov; or write to: Administrator, NHTSA, 400 Seventh Street, SW., Washington, DC 20590. You can also obtain other information about motor vehicle safety from http://www.safercar.gov.

You may notify NISSAN by contacting our Consumer Affairs Department, toll-

free, at 1-800-NISSAN-1 (1-800-647-7261).

READINESS FOR INSPECTION/ MAINTENANCE (I/M) TEST (US only)

Due to legal requirements in some states/ areas, your vehicle may be required to be in what is called the “ready condition” for an Inspection/ Maintenance (I/M) test of the emission control system.

The vehicle is set to the “ready condition” when it is driven through certain driving patterns. Usually, the “ready condition” can be obtained by ordinary usage of the vehicle.

If a powertrain system component is repaired or the battery is disconnected, the vehicle may be reset to a not “ready condition”. Before taking the I/M test, check the vehicle’s inspection/ maintenance test readiness condition. Turn the ignition switch ON without starting the engine. If the Malfunction Indicator Light (MIL) comes on steady for 20 seconds and then blinks for 10 seconds, the I/M test condition is “not ready”. If the MIL does not blink after 20 seconds, the I/M test condition is “ready”.

If the MIL indicates the vehicle is in a “not ready” condition, drive the vehicle through the following pattern to set the vehicle to the ready condition. If you cannot or do not want to perform the driving pattern, a NISSAN dealer can conduct it for you.

WARNING

Always drive the vehicle in a safe and prudent manner according to traffic conditions and obey all traffic laws.

1. Start the engine. Allow the engine to idle until the engine coolant temperature gauge needle points between the C and H (normal operating temperature).
2. Accelerate the vehicle to 55 MPH (88 km/h), then quickly release the accelerator pedal completely and keep it released for at least 10 seconds.
3. Quickly depress the accelerator pedal for a moment, then drive the vehicle at a speed of 53 to 60 MPH (86 to 96 km/h) for at least 9 minutes.
4. Stop the vehicle. Leave the engine running.
5. Accelerate the vehicle to 35 MPH (55 km/h) and maintain the speed for 20 seconds.
6. Repeat steps 4 and 5 at least 10 times.
7. Accelerate the vehicle to 55 MPH (88 km/h) and maintain the speed for at least 3 minutes.
8. Stop the vehicle. Place the automatic trans-

mission gear selector lever in the P (Park) or N (Neutral) position or the manual transmission shift lever in the N position.

9. Turn the engine off.
10. Repeat steps 1 through 8 at least one more time.

If step 1 through 7 is interrupted, repeat the preceding step. Any safe driving mode is acceptable between steps. Do not stop the engine until step 7 is completed.

EVENT DATA RECORDERS

Your vehicle is equipped with a variety of computers that monitor and control a number of systems to optimize performance and help service technicians with diagnosis and repair. Some of the computers monitor emission control systems, braking systems, engine systems, transmission systems, tire pressure systems and air bag systems. Some data about vehicle operation may be stored in the computers for use during servicing. Other data may be stored if a crash event occurs. For example, vehicle speed, brake application, steering angle, air bag readiness, air bag performance and seat belt use by the driver or passenger may be recorded. These types of systems are sometimes called Event Data Recorders.

Special equipment can be used to access the electronic data that may be stored in the vehicle's computers (sounds are not recorded). NISSAN and NISSAN dealers have equipment to access some of this data; others may also have this equipment. The data may be retrieved during routine vehicle servicing or for special research. It might also be accessed with the consent of the vehicle owner or lessee, in response to a request by law enforcement, or as otherwise required or permitted by law.

OWNER'S MANUAL/SERVICE MANUAL ORDER INFORMATION

A genuine NISSAN Service Manual is the best source of service and repair information for your vehicle. Filled with wiring diagrams, illustrations and step-by-step diagnostic and adjustment procedures, this manual is the same one used by the factory trained technicians working at NISSAN dealerships. Also available are genuine NISSAN Owner's Manuals, and genuine NISSAN Service and Owner's Manuals for older NISSAN models.

For USA:

For current pricing and availability of genuine **NISSAN Service Manuals** for the 2000 model year and later, contact:

Tweddle Litho Company
1-800-450-9491
www.nissan-techinfo.com

For current pricing and availability of genuine **NISSAN Service Manuals** for the 1999 model year and prior, see a NISSAN dealer, or contact:

Resolve Corporation
20770 Westwood Drive
Strongsville, OH 44149
1-800-247-5321

For current pricing and availability of genuine **NISSAN Owner's Manuals** for this model year and prior, see a NISSAN dealer, or contact:

Resolve Corporation
20770 Westwood Drive
Strongsville, OH 44149
1-800-247-5321

For Canada:

To purchase a copy of a genuine NISSAN Service Manual or Owner's Manual, please contact a NISSAN dealer. For the phone number and location of a NISSAN dealer in your area call the NISSAN Information Center at 1-800-387-0122 and a bilingual NISSAN representative will assist you.

Also available are Genuine NISSAN Service and Owner's Manuals for older NISSAN models.

IN THE EVENT OF A COLLISION

Unfortunately, accidents do occur. In this unlikely event, there is some important information you should know. Many insurance companies routinely authorize the use of non-genuine collision parts in order to cut costs, among other reasons.

Insist on the use of Genuine NISSAN Collision Parts!

If you want your vehicle to be restored using parts made to NISSAN's original exacting specifications — if you want to help it to last and hold its resale value, the solution is simple. **Tell your insurance agent and your repair shop to only use Genuine NISSAN Collision Parts.** NISSAN does not warrant non-NISSAN parts, nor does NISSAN's warranty apply to damage caused by a non-genuine part.

Using Genuine NISSAN Parts can help protect your personal safety, preserve your warranty protection and maintain the resale value of your vehicle. And if your vehicle was leased, using Genuine NISSAN Parts may prevent or limit unnecessary excess wear and tear expenses at the end of your lease.

NISSAN designs its hoods with crumple zones to minimize the risk that the hood will penetrate the windshield of your vehicle in an accident. Non-genuine (imitation) parts may not provide such built-in safeguards. Also, non-genuine parts often show premature wear, rust and corrosion.

Why should you take a chance?

In over 40 states, the law says you must be advised if non-genuine parts are used to repair your vehicle. And some states have enacted laws that restrict insurance companies from authorizing the use of non-genuine collision parts during the new vehicle warranty. These laws help protect you, so you can take action to protect yourself.

It's your right!

If you should need further information visit us at: **www.nissanusa.com** (for U.S. customers) or **www.nissan.ca** (for Canadian customers).

10 Index

A

ABS (Anti-lock Braking System) 5-21
Advanced air bag system 1-35
Air bag system
- Advanced air bag system 1-35
- Front passenger air bag and status light 1-36
- Side and curtain (See supplemental side air bag and curtain side-impact air bag system) 1-39

Air bag warning labels 1-42
Air bag warning light 1-43, 2-14
Air cleaner housing filter 8-18
Air conditioner
- Air conditioner operation 4-9
- Air conditioner service 4-9, 4-12
- Air conditioner specification label 9-11
- Air conditioning system refrigerant and lubricant recommendations 4-12, 9-6
- Heater and air conditioner (automatic) 4-9

Alarm, How to stop alarm (see vehicle security system) 2-19
Alcohol, drugs and driving 5-6
Anchor point location, Top tether strap 1-24
Antenna 4-30
Anti-lock Braking System (ABS) 5-21
Anti-lock Braking System (ABS) warning light 2-11
Appearance care
- Exterior appearance care 7-2
- Interior appearance care 7-5

Audible reminders 2-17
Audio operation precautions 4-14
Audio system 4-12
- Steering wheel audio controls 4-29

Autochanger
- Compact Disc (CD) 4-26

Automatic
- Anti-glare inside mirror 3-26
- Automatic adjusting function (front windows) 2-40
- Automatic passenger seatback tilt function 1-5, 3-17
- Automatic transmission fluid (ATF) 8-12
- Driving with automatic transmission 5-7, 5-10

Avoiding collision and rollover 5-5

B

Battery 8-15
- Battery saver system 2-25
- Keyfob 8-24

Before starting the engine 5-9
Belts (See drive belts) 8-16
Bluetooth® Hands-Free Phone System 4-31
Booster seats 1-25
Brake
- Anti-lock Braking System (ABS) 5-21
- Brake and clutch fluid 8-13
- Brake fluid 8-13
- Brake system 5-21
- Parking brake operation 5-15
- Warning light 2-12

Break-in schedule 5-18
Brightness control, Instrument panel 2-26
Bulb check/instrument panel 2-11
Bulb replacement 8-25

C

Capacities and recommended fuel/lubricants 9-2
Car phone or CB radio 4-31
Cargo (See vehicle loading information) 2-33
Cargo net 2-33
Catalytic converter, Three way catalyst 5-3
CD care and cleaning 4-29
Child restraints 1-17
- Booster seats 1-25
- Installation on front passenger seat 1-20
- Precautions on child restraints 1-17
- Top tether strap 1-24
- Top tether strap anchor point location 1-24

Child safety 1-12
Chimes, Audible reminders 2-17
Circuit breaker, Fusible link 8-22

Cleaning exterior and interior 7-2, 7-5
Clock 2-30
Clutch fluid 8-13
Coat hooks 2-38
Cold weather driving 5-25
Command (See Bluetooth® Hands-Free Phone System) 4-37
Compact Disc (CD) changer (See audio system) 4-26
Compact Disc (CD) player (See audio system) 4-21
Compact spare tire 8-38
Console box 2-35
Control panel buttons (models with navigation system) 4-2
Controls
  Control panel buttons (display with navigation system) 4-2
  Heater and air conditioner controls (automatic) 4-9
  Steering wheel audio controls 4-29
Coolant
  Capacities and recommended fuel/lubricants 9-2
  Changing engine coolant 8-9
  Checking engine coolant level 8-8
Corrosion protection 7-6
Cruise control 5-16
Cup holders 2-33
Curtain side-impact air bag system 1-39

D

Daytime running light system 2-25
Defroster switch, Rear window and outside mirror defroster switch 2-23
Dimensions and weights 9-8
Display controls (See control panel buttons), With navigation system 4-2
Door open warning light 2-12
Drive belts 8-16
Driving
  Cold weather driving 5-25
  Driving with automatic transmission 5-7, 5-10
  Driving with manual transmission 5-7, 5-13
  Precautions when starting and driving 5-2

E

Economy, Fuel 5-18
Elapsed time 2-10
Emission control information label 9-10
Emission control system warranty 9-23
Engine
  Before starting the engine 5-9
  Break-in schedule 5-18
  Capacities and recommended fuel/lubricants 9-2
  Changing engine coolant 8-9
  Changing engine oil and filter 8-10
  Checking engine coolant level 8-8
  Checking engine oil level 8-9
  Coolant temperature gauge 2-5
  Engine block heater 5-26
  Engine compartment check locations 8-7
  Engine cooling system 8-8
  Engine oil 8-9
  Engine oil and oil filter recommendation 9-5
  Engine oil viscosity 9-5
  Engine serial number 9-10
  Engine specifications 9-7
  If your vehicle overheats 6-9
  Oil pressure gauge 2-7
  Starting the engine 5-9
Event data recorders 9-25
Exhaust gas (Carbon monoxide) 5-2

F

F.M.V.S.S./C.M.V.S.S. certification label 9-10
Filter, Air cleaner housing filter 8-18
Filter, Changing engine oil and filter 8-10
Flashers (See hazard warning flasher switch) 2-27
Flat tire 6-2
Flat towing 9-21
Floor mat cleaning 7-5
Fluid
  Automatic transmission fluid (ATF) 8-12
  Brake and clutch fluid 8-13
  Brake fluid 8-13
  Capacities and recommended fuel/lubricants 9-2
  Engine coolant 8-8
  Engine oil 8-9
  Power steering fluid 8-12
  Window washer fluid 8-14
FM-AM radio with Compact Disc (CD) player 4-19
FM-AM-SAT radio with Compact Disc (CD) changer 4-23
Front manual seat adjustment 1-3
Front passenger air bag and status light 1-36

Front power seat adjustment 1-3, 1-4
Fuel
Average fuel consumption 2-9
Capacities and recommended fuel/ lubricants 9-2
Distance to empty 2-9
Fuel economy 5-18
Fuel octane rating 9-3
Fuel recommendation 9-3
Fuel-filler cap 3-23
Fuel-filler door 3-23
Gauge 2-6
Fuses 8-21
Fusible links 8-22

G

Garage door opener, HomeLink® Universal Transceiver 2-43
Gas cap 3-23
Gauge 2-3
Engine coolant temperature gauge 2-5
Engine oil pressure gauge 2-7
Fuel gauge 2-6
Odometer 2-4
Speedometer 2-4
Tachometer 2-5
Trip computer 2-8
Volt meter 2-8
General maintenance 8-2
Golf bag stowing 2-37

H

Hands-free phone system, Bluetooth® 4-31
Hatch, Rear hatch 3-9
Hazard warning flasher switch 2-27
Head restraints 1-9
Headlights
Bulb replacement 8-26
Headlight switch 2-24
Xenon headlights 2-24
Heated seats 2-28
Heater
Engine block heater 5-26
Heater and air conditioner (automatic) 4-9
HomeLink® Universal Transceiver 2-43
Hood release 3-8
Hook, Coat hooks 2-38
Horn 2-27

I

Ignition switch 5-6
Automatic transmission models 5-7, 5-10
Key positions 5-8
Manual transmission models 5-7, 5-13
Immobilizer system 2-19
Indicator lights 2-15
Inside
Automatic anti-glare mirror 3-26
Mirror 3-26
Inspection/maintenance (I/M) test 9-24
Instrument brightness control 2-26
Instrument panel 2-2
Instrument pocket 2-32
Interior light replacement 8-27
Interior lights 2-41
Interior trunk lid release 3-11

J

Jump starting 6-7

K

Keyfob battery replacement 8-24
Keyless entry (See remote keyless entry system) 3-5
Keys 3-2

L

Labels
Air bag warning labels 1-42
Air conditioner specification label 9-11
Emission control information label 9-10
Engine serial number 9-10
F.M.V.S.S./C.M.V.S.S. certification label 9-10
Tire and Loading Information label 8-31, 9-11
Vehicle identification number (VIN) 9-9
License plate, Installing front license plate 9-12
Light
Air bag warning light 1-43
Bulb replacement 8-25
Headlight switch 2-24
Headlights bulb replacement 8-26
Indicator lights 2-15

Interior lights 2-41
Luggage compartment light 2-42
Map lights 2-41
Replacement 8-25
Room light 2-41
Trunk light 2-42
Vanity mirror light 2-42
Warning/indicator lights and audible reminders 2-11
Xenon headlights 2-24
Lights, Exterior and interior light replacement 8-27
Loading information (See vehicle loading information) 9-13
Lock
Door locks 3-3
Power door lock 3-3
Rear floor box 2-35
Rear hatch lock 3-9
Top latch lever 3-16
Trunk lid 3-10
Low tire pressure warning light 2-13
Low tire pressure warning system (See tire pressure monitoring system (TPMS)) 5-3
Luggage compartment light 2-42

M

Maintenance
Battery 8-15
General maintenance 8-2
Inside the vehicle 8-3
Maintenance information (display) 4-3
Maintenance precautions 8-5
Maintenance requirements 8-2
Outside the vehicle 8-2
Seat belt maintenance 1-16
Under the hood and vehicle 8-4
Malfunction indicator light (MIL) 2-15
Manual front seat adjustment 1-3
Map lights 2-41
Meter, Trip computer 2-8
Meters and gauges 2-3
Meters and gauges, Instrument brightness control 2-26
Mirror
Automatic anti-glare inside mirror 3-26
Inside mirror 3-26
Outside mirrors 3-27

N

Net
Cargo net 2-33
Ventilated net seats 1-6
New vehicle break-in 5-18
NISSAN Vehicle Immobilizer System 2-19
NISSAN Vehicle Immobilizer System, Engine start 5-8

O

Odometer 2-4
Oil
Capacities and recommended fuel/lubricants 9-2
Changing engine oil and filter 8-10
Checking engine oil level 8-9
Engine oil 8-9
Engine oil pressure gauge 2-7
Engine oil viscosity 9-5
Opening the soft top 3-13
Outside air temperature display 2-9
Outside mirrors 3-27
Overheat, If your vehicle overheats 6-9
Owner's Manual/Service Manual order information 9-25

P

Parking
Brake break-in 5-21
Parking brake operation 5-15
Parking on hills 5-19
Phone, Bluetooth® Hands-Free Phone System 4-31
Phone, Car phone or CB radio 4-31
Power
Front seat adjustment 1-3, 1-4
Power door lock 3-3
Power outlet 2-31
Power steering fluid 8-12
Power steering system 5-20
Power windows 2-39
Pre-tensioner seat belt system 1-41
Precautions
Audio operation 4-14
Braking precautions 5-21
Child restraints 1-17
Cruise control 5-16
Maintenance 8-5
Seat belt usage 1-10
Supplemental restraint system 1-28

When starting and driving 5-2
Push starting 6-9

R

Radio 4-12
Car phone or CB radio 4-31
FM-AM radio with Compact Disc (CD) changer 4-23
FM-AM radio with Compact Disc (CD) player 4-19
Steering wheel audio controls 4-29
Readiness for inspection/maintenance (I/M) test (US only) 9-24
Rear floor box 2-35
Rear hatch 3-9
Rear hatch opener 3-9
Rear parcel box 2-37
Rear power point 2-31
Rear window and outside mirror defroster switch 2-23
Rear window wiper and washer switch 2-22
Recorders, Event data 9-25
Registering your vehicle in another country 9-9
Remote keyless entry system 3-5
Reporting safety defects (US only) 9-23
Rollover 5-5
Roof, Soft top 3-13
Room light 2-41

S

Safety
Child seat belts 1-12
Reporting safety defects (US only) 9-23
Towing safety 9-18
Seat adjustment, Front manual seat adjustment 1-3
Seat adjustment, Front power seat adjustment 1-3, 1-4
Seat belt(s)
Child safety 1-12
Infants 1-13
Injured persons 1-14
Larger children 1-13
Pre-tensioner seat belt system 1-41
Precautions on seat belt usage 1-10
Pregnant women 1-13
Seat belt cleaning 7-6
Seat belt extenders 1-16
Seat belt maintenance 1-16
Seat belt warning light 2-14
Seat belts 1-10
Shoulder belt arm 1-16
Small children 1-13
Three-point type with retractor 1-14
Seat lever, Tilting passenger's seat 1-7
Seat(s)
Heated seats 2-28
Seats 1-2
Ventilated net seats 1-6
Seatback tilt cancel switch 1-8
Secondary rear hatch release 3-10
Secondary trunk lid release 3-12
Security system (NISSAN Vehicle Immobilizer System), Engine start 2-19
Security system, Vehicle security system 2-18
Selector lever, Shift lock release 5-13
Servicing air conditioner 4-9, 4-12
Shift lock release, Transmission 5-13
Shifting
Automatic transmission 5-7, 5-10
Manual transmission 5-7, 5-13
Shoulder belt arm 1-16
Side air bag system 1-39
Soft top, Care and cleaning 7-3
Soft top, If the top does not open or close 3-19
Soft top, Soft top indicator light 2-17, 3-17
Soft top, Soft top operation 3-13
Spare tire 9-8
Spark plugs 8-17
Speed, Speed indicator 2-9
Speedometer 2-4
Starting
Before starting the engine 5-9
Jump starting 6-7
Precautions when starting and driving 5-2
Push starting 6-9
Starting the engine 5-9
Status light, Front passenger air bag 1-36
Steering
Power steering fluid 8-12
Power steering system 5-20
Steering wheel switch for audio controls 4-29
Tilting steering wheel 3-25
Stopwatch 2-10
Storage 2-32
Stowing golf bags 2-37
Sun visors 3-25
Sunglasses holder 2-32
Supplemental air bag warning labels 1-42
Supplemental air bag warning light 1-43, 2-14

Supplemental restraint system 1-28
Precautions on supplemental restraint system 1-28
Supplemental side and curtain side-impact air bag system 1-39
Switch
Audio control steering wheel switch 4-29
Hazard warning flasher switch 2-27
Headlight switch 2-24
Ignition switch 5-6
Ignition switch automatic transmission models 5-7, 5-10
Ignition switch manual transmission models 5-7, 5-13
Power door lock switch 3-4
Rear window and outside mirror defroster switch 2-23
Traction control system (TCS) off switch 2-29
Turn signal switch 2-26
Vehicle dynamic control (VDC) off switch 2-29

T

Tachometer 2-5
Temperature display 2-9
Temperature gauge, Engine coolant temperature gauge 2-5
Theft (NISSAN Vehicle Immobilizer System), Engine start 2-19
Three-way catalyst 5-3
Tilting passenger's seat 1-7
Tilting steering wheel 3-25
Tire pressure, Low tire pressure warning light 2-13
Tires
Flat tire 6-2
Low tire pressure warning system 5-3
Spare tire 8-38
Tire and Loading information label 8-31
Tire and Loading Information label 9-11
Tire chains 8-36
Tire dressing 7-4
Tire pressure 8-29
Tire pressure monitoring system (TPMS) 5-3, 6-2
Tire rotation 8-36
Types of tires 8-35
Uniform tire quality grading 9-22
Wheel/tire size 9-8
Wheels and tires 8-29
Top tether strap child restraints 1-24
Top, Soft top 3-13
Towing
Flat towing 9-21
Tow truck towing 6-10
Towing a trailer 9-17
Towing load/specification chart 9-17
Towing safety 9-18
TPMS, Tire pressure monitoring system 5-3
TPMS, Tire pressure warning system 6-2
Traction control system (TCS) 5-23
Traction control system (TCS) off switch 2-29
Trailer towing 9-17
Transceiver, HomeLink® Universal Transceiver 2-43
Transmission
Automatic transmission fluid (ATF) 8-12
Driving with automatic transmission 5-7, 5-10
Driving with manual transmission 5-7, 5-13
Transmission selector lever lock release 5-13
Transmitter (See remote keyless entry system) 3-5
Traveling or registering your vehicle in another country 9-9
Trip computer 2-8
Trip odometer 2-10
Trunk
Interior trunk lid release 3-11
Light 2-42
Secondary trunk lid release 3-12
Trunk lid 3-10
Turn signal switch 2-26

U

Underbody cleaning 7-3
Uniform tire quality grading 9-22
Up-shift indicator (M/T models) 5-14
Up-shift indicator setting (rpm) (M/T models) 2-10

V

Vanity mirror light 2-42
Vehicle
Dimensions and weights 9-8
Identification number (VIN) 9-9
Loading information 9-13
Recovery (freeing a stuck vehicle) 6-12
Security system 2-18
Vehicle dynamic control (VDC) off switch 2-29
Vehicle dynamic control (VDC) system 5-23
Ventilated net seats 1-6

Ventilators 4-8
Voice command (See Bluetooth® Hands-Free Phone System) 4-37
Volt meter 2-8

W

Warning labels, Air bag warning labels 1-42
Warning light
- Air bag warning light 1-43, 2-14
- Anti-lock Braking System (ABS) warning light 2-11
- Brake warning light 2-12
- Door open warning light 2-12
- Low tire pressure warning light 2-13
- Seat belt warning light 2-14

Warning lights 2-11
Warning, Hazard warning flasher switch 2-27
Warning, Tire pressure monitoring system (TPMS) 5-3, 6-2
Warning, Warning/indicator lights and audible reminders 2-11
Warranty, Emission control system warranty 9-23
Washer switch
- Rear window wiper and washer switch 2-22
- Windshield wiper and washer switch 2-21

Washing 7-2
Waxing 7-3
Weights (See dimensions and weights) 9-8
Wheel/tire size 9-8
Wheels and tires 8-29
- Cleaning aluminum alloy wheels 7-4

Window washer fluid 8-14
Window(s)
- Automatic adjusting function 2-40
- Cleaning 7-3
- Power windows 2-39

Windshield wiper and washer switch 2-21
Wiper
- Rear window wiper and washer switch 2-22
- Windshield wiper and washer switch 2-21
- Wiper blades 8-18

X

Xenon headlights 2-24

MEMO

GAS STATION INFORMATION

FUEL RECOMMENDATION:

Use unleaded premium gasoline with an octane rating of at least 91 AKI (Anti-Knock Index) number (Research octane number 96).

If premium gasoline is not available, unleaded regular gasoline with an octane rating of 87 AKI number (Research octane number 91) may be temporarily used, but only under the following precautions:

- Have the fuel tank filled only partially with unleaded regular gasoline, and fill up with unleaded premium gasoline as soon as possible.
- Avoid full throttle driving and abrupt acceleration.

However, for maximum vehicle performance, the use of unleaded premium gasoline is recommended.

CAUTION

- **Using a fuel other than that specified could adversely affect the emission control system, and may also affect the warranty coverage.**
- **Under no circumstances should a leaded gasoline be used, because this will damage the three-way catalyst.**
- **Do not use E-85 fuel in your vehicle. Your vehicle is not designed to run on E-85 fuel. Using E-85 fuel can damage the fuel system components and is not covered by the NISSAN vehicle limited warranty.**

For additional information, see “Capacities and recommended fuel/lubricants” in the “9. Technical and consumer information” section.

ENGINE OIL RECOMMENDATION:

- Engine oil with API Certification Mark
- Viscosity SAE 5W-30

See “Capacities and recommended fuel/lubricants” in the “9. Technical and consumer information” section for engine oil and oil filter recommendation.

COLD TIRE INFLATION PRESSURES:

See Tire and Loading Information label affixed to the driver’s side center pillar.

NEW VEHICLE BREAK-IN PROCEDURES RECOMMENDATION:

During the first 1,200 miles (2,000 km) of vehicle use, follow the recommendations outlined in the “Break-in schedule” information found in the “5. Starting and driving” section of this Owner’s Manual. Follow these recommendations for the future reliability and economy of your new vehicle.

QUICK REFERENCE

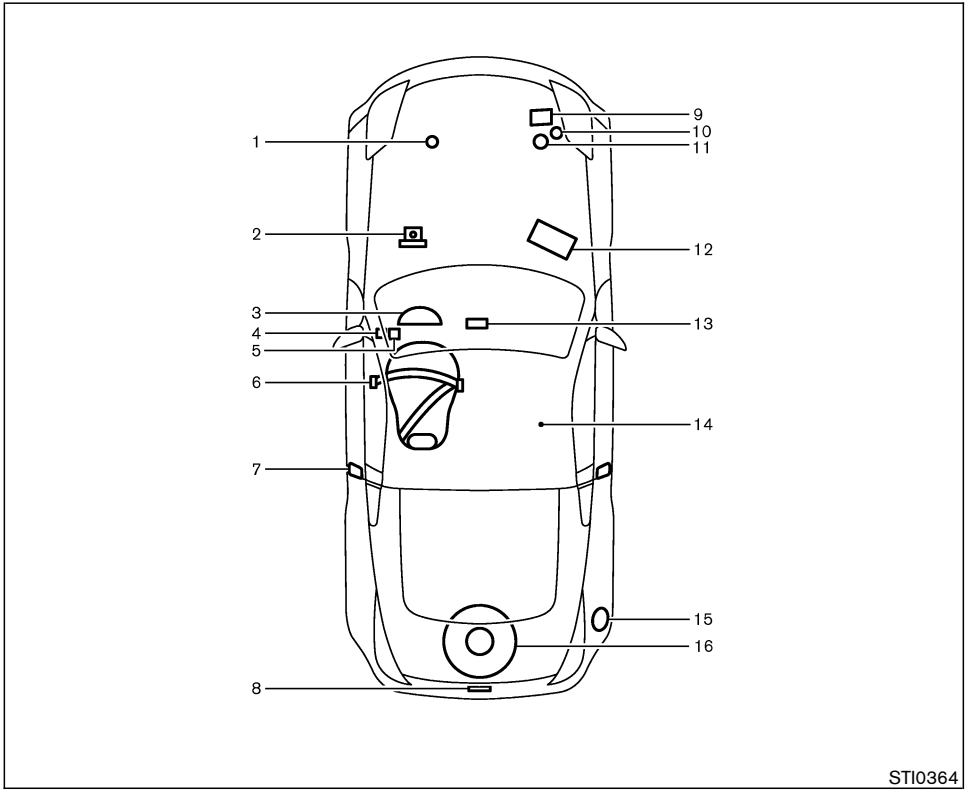

1. Engine oil (P.8-9)
2. Brake fluid (P.8-13)
3. Meters and gauges (P.2-3)
4. Fuel-filler door release (P.3-23)
5. Hood release (P.3-8)
6. Seat belt (P.1-10)
7. Door lock/key (P.3-2)
8. Rear hatch release (Coupe) (P.3-9) or Trunk lid release (Roadster) (P.3-10)
9. Engine coolant (P.8-8)
10. Window washer fluid (P.8-14)
11. Power steering fluid (P.8-12)
12. Battery (P.8-15)
13. Audio system (P.4-12)/ Heater and air conditioner (P.4-9)
14. Soft top (Roadster models) (P.3-13)
15. Fuel (P.3-23, P.9-3)
16. Spare tire (P.6-3, P.8-38)