2015 Journey

OWNER'S MANUAL

VEHICLES SOLD IN CANADA

With respect to any Vehicles Sold in Canada, the name Chrysler Group LLC shall be deemed to be deleted and the name Chrysler Canada Inc. used in substitution therefore.

DRIVING AND ALCOHOL

Drunken driving is one of the most frequent causes of accidents.

Your driving ability can be seriously impaired with blood alcohol levels far below the legal minimum. If you are drinking, don't drive. Ride with a designated non-drinking driver, call a cab, a friend, or use public transportation.

WARNING!
Driving after drinking can lead to an accident. Your perceptions are less sharp, your reflexes are slower, and your judgment is impaired when you have been drinking. Never drink and then drive.

This manual illustrates and describes the operation of features and equipment that are either standard or optional on this vehicle. This manual may also include a description of features and equipment that are no longer available or were not ordered on this vehicle. Please disregard any features and equipment described in this manual that are not on this vehicle.

Chrysler Group LLC reserves the right to make changes in design and specifications, and/or make additions to or improvements to its products without imposing any obligation upon itself to install them on products previously manufactured.

Copyright © 2014 Chrysler Group LLC

TABLE OF CONTENTS

SECTION		PAGE
1	INTRODUCTION	3
2	THINGS TO KNOW BEFORE STARTING YOUR VEHICLE	9
3	UNDERSTANDING THE FEATURES OF YOUR VEHICLE	109
4	UNDERSTANDING YOUR INSTRUMENT PANEL	293
5	STARTING AND OPERATING	403
6	WHAT TO DO IN EMERGENCIES	509
7	MAINTAINING YOUR VEHICLE	539
8	MAINTENANCE SCHEDULES	603
9	IF YOU NEED CONSUMER ASSISTANCE	611
10	INDEX	621

INTRODUCTION

CONTENTS

- INTRODUCTION 4
- HOW TO USE THIS MANUAL 4
- WARNINGS AND CAUTIONS 6
- VEHICLE IDENTIFICATION NUMBER 6
- VEHICLE MODIFICATIONS/ALTERATIONS 7

INTRODUCTION

Congratulations on selecting your new Chrysler Group LLC vehicle. Be assured that it represents precision workmanship, distinctive styling, and high quality - all essentials that are traditional to our vehicles.

This Owner's Manual has been prepared with the assistance of service and engineering specialists to acquaint you with the operation and maintenance of your vehicle. It is supplemented by Warranty Information, and various customer-oriented documents. Please take the time to read these publications carefully. Following the instructions and recommendations in this manual will help assure safe and enjoyable operation of your vehicle.

NOTE: After reviewing the owner information, it should be stored in the vehicle for convenient referencing and remain with the vehicle when sold.

When it comes to service, remember that your authorized dealer knows your vehicle best, has factory-trained technicians and genuine parts, and cares about your satisfaction.

HOW TO USE THIS MANUAL

Consult the Table of Contents to determine which section contains the information you desire.

Since the specification of your vehicle depends on the items of equipment ordered, certain descriptions and illustrations may differ from your vehicle's equipment.

The detailed index at the back of this Owner's Manual contains a complete listing of all subjects.

Consult the following table for a description of the symbols that may be used on your vehicle or throughout this Owner's Manual:

WATER IN FUEL
REAR WINDOW WIPER
WINDSHIELD WIPER INTERMITTENT
EXTERIOR BULB FAILURE
HIGH BEAM
TURN SIGNALS
UPPER AIR OUTLET
HEATED SEAT LOW
DOOR LOCK
ADJUSTABLE PEDALS
ELECTRONIC SPEED CONTROL
ESP BAS
ELECTRONIC STABILITY PROGRAM / BRAKE ASSIST SYSTEM
FUEL
REAR WINDOW INTERMITTENT WIPER
WINDSHIELD WASHER
MASTER LIGHTING SWITCH
LOW BEAM
KEY ACTIVATE (POWER OUTLET)
UPPER AND LOWER AIR OUTLET
HEATED SEAT HIGH
WINDOW LIFT
TIRE PRESSURE MONITOR
HILL DESCENT CONTROL
BRAKE
BRAKE SYSTEM WARNING PARKING BRAKE
FUEL FILL SIDE
REAR WINDOW WASHER
WINDSHIELD WASHER FLUID LEVEL
DOME LIGHT
FRONT FOG LIGHT
HOOD RELEASE
LOWER AIR OUTLET
RECIRCULATION
CONVERTIBLE 4 WINDOW DOWN
ELECTRONIC STABILITY CONTROL
AWD!
ALL WHEEL DRIVE
ABS
FAILURE OF ANTI-LOCK BRAKING SYSTEM
ENGINE OIL
REAR WINDOW DEFROST
WINDSHIELD, ELECTRICALLY HEATED
PARK LIGHTS
REAR FOG LAMP
LIFTGATE RELEASE AND LIFTGATE OPEN
DEFROST AND LOWER AIR OUTLET
VENTILATING FAN
WINDOW LOCK
ELECTRONIC THROTTLE CONTROL
4WD!
FOUR WHEEL DRIVE
BRAKE
BRAKE SYSTEM WARNING PARKING BRAKE
BATTERY CHARGING
HEATED MIRROR
WINDSHIELD DEFROST
INSTRUMENT PANEL ILLUMINATION
SEAT BELT
SLIDING DOOR
TRUNK / DECK RELEASE
AIR CONDITIONING
CHILD SEAT TETHER ANCHOR
VOICE RECOGNITION BUTTON
WARNING
TOW/ HAUL
TOW / HAUL
GLOW PLUG
POWER STEERING FLUID
WINDSHIELD WIPER AND WASHER
SIDE AIRBAG
AIRBAG
SLIDING DOOR
EMERGENCY RELEASE HANDLE
LIGHTER
LOWER ANCHORS AND TETHER FOR CHILDREN (LATCH)
UCONNECT™ BUTTON
HAZARD
4 LOW
FOUR WHEEL DRIVE LOW
MALFUNCTION INDICATOR LIGHT
TRANS OIL TEMP
ENGINE COOLANT TEMPERATURE
SRS AIRBAG
SUPPLEMENTAL RESTRAINT SYSTEM
PASSENGER AIRBAG OFF
DOOR AJAR
CONVERTIBLE TOP DOWN
CONVERTIBLE TOP UP
HORN
SEE OWNER'S MANUAL ISO
A/C PUSH
AIR CONDITIONER
OFF
ELECTRONIC STABILITY CONTROL OFF

010533317

WARNINGS AND CAUTIONS

This Owners Manual contains **WARNINGS** against operating procedures that could result in a collision or bodily injury. It also contains **CAUTIONS** against procedures that could result in damage to your vehicle. If you do not read this entire Owners Manual, you may miss important information. Observe all Warnings and Cautions.

VEHICLE IDENTIFICATION NUMBER

The Vehicle Identification Number (VIN) is on the left front corner of the instrument panel and is visible from outside of the vehicle through the windshield. This number also appears stamped on the right front door sill under the sill moulding and printed on the Automobile Information Disclosure Label affixed to a window on your vehicle, the vehicle registration and title.

The VIN is also stamped on either right or left hand side of the engine block.

VIN Location

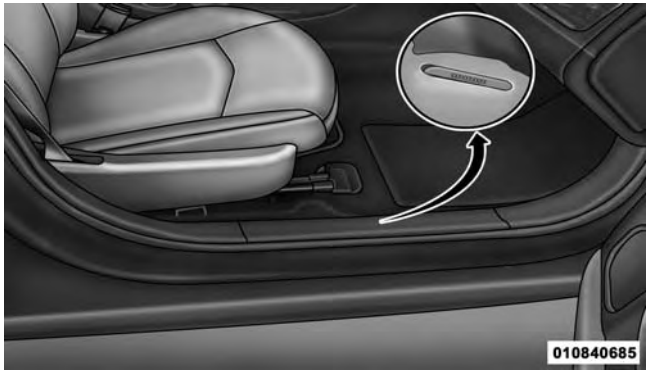

Stamped VIN Location

NOTE: It is illegal to remove or alter the VIN.

VEHICLE MODIFICATIONS/ALTERATIONS

WARNING!

Any modifications or alterations to this vehicle could seriously affect its roadworthiness and safety and may lead to a collision resulting in serious injury or death.

THINGS TO KNOW BEFORE STARTING YOUR VEHICLE

CONTENTS

■ A WORD ABOUT YOUR KEYS 11
- □ Keyless Ignition Node (KIN) 11
- □ Key Fob 12
- □ Ignition Or Accessory On Message 13

■ SENTRY KEY® 15
- □ Replacement Keys 16
- □ Customer Key Programming 16
- □ General Information 16

■ VEHICLE SECURITY ALARM — IF EQUIPPED . . .17
- □ Rearming Of The System 17
- □ To Arm The System. 17
- □ To Disarm The System. 18
- □ Security System Manual Override. 19

■ ILLUMINATED ENTRY 19

■ REMOTE KEYLESS ENTRY (RKE) 20
- □ To Unlock The Doors And Liftgate 21
- □ To Lock The Doors And Liftgate. 22
- □ Using The Panic Alarm 22
- □ Programming Additional Transmitters 23
- □ Transmitter Battery Replacement 23

- General Information 24

■ REMOTE STARTING SYSTEM — IF EQUIPPED . .25

- How To Use Remote Start 25

■ DOOR LOCKS 28

- Manual Door Locks 28
- Power Door Locks 30
- Child-Protection Door Lock System — Rear Doors 32

■ KEYLESS ENTER-N-GO™ 34

■ WINDOWS 39

- Power Windows 39
- Wind Buffeting 42

■ LIFTGATE 42

■ OCCUPANT RESTRAINT SYSTEMS 44

- Important Safety Precautions 44
- Seat Belt Systems 46
- Supplemental Restraint System (SRS) 61
- Child Restraints 76
- Transporting Pets 102

■ ENGINE BREAK-IN RECOMMENDATIONS . . .102

■ SAFETY TIPS 103

- Transporting Passengers 103
- Exhaust Gas 104
- Safety Checks You Should Make Inside The Vehicle 105
- Periodic Safety Checks You Should Make Outside The Vehicle 107

A WORD ABOUT YOUR KEYS

Your vehicle uses a keyless ignition system. This system consists of a Key Fob with Remote Keyless Entry (RKE) transmitter and a Keyless Ignition Node (KIN).

Keyless Enter-N-Go™ Feature

This vehicle is equipped with the Keyless Enter-N-Go™ feature, (refer to "Keyless Enter-N-Go™" in "Things To Know Before Starting Your Vehicle" for further information).

Keyless Ignition Node (KIN)

This feature allows the driver to operate the ignition switch with the push of a button, as long as the Remote Keyless Entry (RKE) transmitter is in the passenger compartment.

The Keyless Ignition Node (KIN System) has four operating positions, three of which are labeled and will illuminate when in position. The three positions are OFF, ACC, and ON/RUN. The fourth position is START, during start RUN will illuminate.

NOTE: In case the ignition switch does not change with the push of a button, the RKE transmitter (Key Fob) may have a low or dead battery. In this situation a back up method can be used to operate the ignition switch. Put the nose side (side opposite of the emergency key) of the Key Fob against the ENGINE START/STOP button and push to operate the ignition switch.

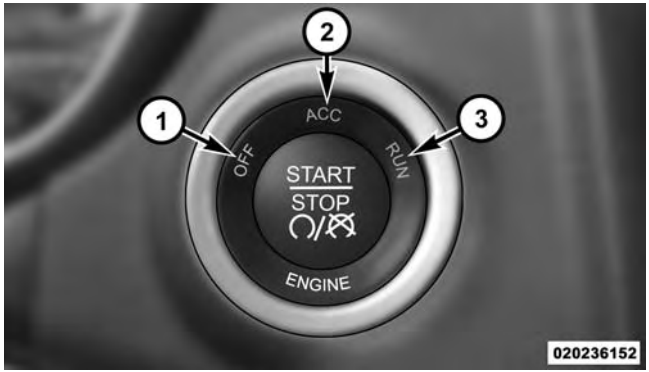

Keyless Ignition Node (KIN System)

1 — OFF
2 — ACC (ACCESSORY)
3 — ON/RUN

Key Fob

The Key Fob also contains the Remote Keyless Entry (RKE) transmitter and an emergency key, which stores in the rear of the Key Fob.

The emergency key allows for entry into the vehicle should the battery in the vehicle or the Key Fob go dead. The emergency key is also for locking the glove box. You can keep the emergency key with you when valet parking.

To remove the emergency key, slide the mechanical latch on the back of the Key Fob sideways with your thumb and then pull the key out with your other hand.

Emergency Key Removal

NOTE: You can insert the double-sided emergency key into the lock cylinders with either side up.

Ignition Or Accessory On Message

Opening the driver's door when the ignition is in ACC or ON (engine not running), a chime will sound to remind you to cycle the ignition to OFF. In addition to the chime, the ignition or accessory on message will display in the cluster.

NOTE: With the Uconnect® system, the power window switches, radio, power sunroof (if equipped), and power outlets will remain active for up to 10 minutes after the ignition is cycled to the OFF position. Opening either front door will cancel this feature. The time for this feature is programmable. Refer to "Uconnect® Settings" in "Understanding Your Instrument Panel" for further information.

WARNING!

- **Before exiting a vehicle, always apply the parking brake, shift the transmission into PARK, and push ignition button to place ignition in OFF mode. When leaving the vehicle, always lock your vehicle.**
- **Never leave children alone in a vehicle, or with access to an unlocked vehicle.**
- **Allowing children to be in a vehicle unattended is dangerous for a number of reasons. A child or others could be seriously or fatally injured. Children should be warned not to touch the parking brake, brake pedal or the transmission gear selector.**

(Continued)

WARNING! ***(Continued)***

- **Do not leave the Key Fob in or near the vehicle, or in a location accessible to children, and do not leave the ignition of a vehicle equipped with Keyless Enter-N-Go™ in the ACC or ON/RUN mode. A child could operate power windows, other controls, or move the vehicle.**
- **Do not leave children or animals inside parked vehicles in hot weather. Interior heat build-up may cause serious injury or death.**

CAUTION!

An unlocked car is an invitation to thieves. Always remove the Key Fob from vehicle, cycle the ignition OFF and lock all doors when leaving the vehicle unattended.

SENTRY KEY®

The Sentry Key® Immobilizer system prevents unauthorized vehicle operation by disabling the engine. The system does not need to be armed or activated. Operation is automatic, regardless of whether the vehicle is locked or unlocked.

The system uses a Key Fob with a factory-mated Remote Keyless Entry (RKE) transmitter, a Keyless Ignition Node (KIN) and a RF receiver to prevent unauthorized vehicle operation. Therefore, only Key Fobs that are programmed to the vehicle can be used to start and operate the vehicle. The system will not allow the engine to crank if an invalid Key Fob.

After placing the ignition to the ON/RUN position, the Vehicle Security Light will turn on for three seconds for a bulb check. If the light remains on after the bulb check, it indicates that there is a problem with the system. In addition, if the light begins to flash after the bulb check, it indicates that someone used an invalid Key Fob to start the engine. Either of these conditions will result in the engine being shut off after two seconds.

If the Vehicle Security Light turns on during normal vehicle operation (vehicle running for longer than 10 seconds), it indicates that there is a fault in the system. Should this occur, have the vehicle serviced as soon as possible by an authorized dealer.

CAUTION!

- **Do not make modifications or alterations to the immobilizer system. Modifications or alterations to the immobilization system may result in a loss of security protection.**
- **The Sentry Key® Immobilizer system is not compatible with some aftermarket remote starting systems. Use of these systems may result in vehicle starting problems and loss of security protection.**

All of the Key Fobs provided with your new vehicle have been programmed to the vehicle electronics.

Replacement Keys

NOTE: Only Key Fobs that are programmed to the vehicle electronics can be used to start and operate the vehicle. Once a Key Fob is programmed to a vehicle, it cannot be programmed to any other vehicle.

CAUTION!

- **Always remove the Key Fobs from the vehicle and lock all doors when leaving the vehicle unattended.**
- **For vehicles equipped with Keyless Enter-N-Go™, always remember to place the ignition in the OFF position.**

At the time of purchase, the original owner is provided with a four-digit Personal Identification Number (PIN). Keep the PIN in a secure location. This number is required for authorized dealer replacement of Key Fobs. Duplication of Key Fobs may be performed at an authorized dealer. This procedure consists of programming a blank Key Fob to the vehicle electronics. A blank Key Fob is one that has never been programmed.

NOTE: When having the Sentry Key® Immobilizer System serviced, bring all vehicle keys with you to an authorized dealer.

Customer Key Programming

Programming Key Fobs or RKE transmitters may be performed at an authorized dealer.

General Information

The Sentry Key® system complies with FCC rules part 15 and with RSS-210 of Industry Canada. Operation is subject to the following conditions:

- This device may not cause harmful interference.

- This device must accept any interference that may be received, including interference that may cause undesired operation.

NOTE: Changes or modifications not expressly approved by the party responsible for compliance could void the user's authority to operate the equipment.

VEHICLE SECURITY ALARM — IF EQUIPPED

The Vehicle Security Alarm monitors the vehicle doors and liftgate for unauthorized entry and the Keyless Enter-N-Go™ Start/Stop button for unauthorized operation. While the Vehicle Security Alarm is armed, interior switches for door locks are disabled. If something triggers the alarm, the Vehicle Security Alarm will provide the following audible and visible signals: the horn will pulse, the headlights will turn on, the park lamps and/or turn signals will flash, and the Vehicle Security Light in the instrument cluster will flash.

Rearming Of The System

If something triggers the alarm, and no action is taken to disarm it, the Vehicle Security Alarm will turn the horn off after 3 minutes, turn all of the visual signals off after 15 additional minutes, and then the Vehicle Security Alarm will rearm itself.

To Arm The System

Follow these steps to arm the Vehicle Security Alarm:

1. Make sure the vehicle ignition system is "OFF" (refer to "Starting Procedures" in "Starting And Operating" for further information).
2. Perform one of the following methods to lock the vehicle:
   - Push LOCK on the interior power door lock switch with the driver and/or passenger door open.

- Push the LOCK button on the exterior Passive Entry Door Handle with a valid Key Fob available in the same exterior zone (refer to "Keyless Enter-N-Go™" in "Things To Know Before Starting Your Vehicle" for further information).
- Push the LOCK button on the Remote Keyless Entry (RKE) transmitter.

3. If any doors are open, close them.

To Disarm The System

The Vehicle Security Alarm can be disarmed using any of the following methods:

- Push the UNLOCK button on the Remote Keyless Entry (RKE) transmitter.
- Grasp the Passive Entry Unlock Door Handle with a valid Key Fob within 5 ft (1.5 m) of the passive entry door handle (if equipped, refer to "Keyless Enter-N-Go™" in "Things To Know Before Starting Your Vehicle" for further information).
- Cycle the vehicle ignition system out of the OFF position.
  - For vehicles equipped with Keyless Enter-N-Go™, push the Keyless Enter-N-Go™ Start/Stop button (requires at least one valid Key Fob in the vehicle).
  - For vehicles not equipped with Keyless Enter-N-Go™, insert a valid key into the ignition switch and turn the key to the ON position.

NOTE:

- The driver's door key cylinder and the liftgate button on the RKE transmitter cannot arm or disarm the Vehicle Security Alarm.
- When the Vehicle Security Alarm is armed, the interior power door lock switches will not unlock the doors.

The Vehicle Security Alarm is designed to protect your vehicle; however, you can create conditions where the system will give you a false alarm. If one of the previously described arming sequences has occurred, the Vehicle Security Alarm will arm regardless of whether you are in the vehicle or not. If you remain in the vehicle and open a door, the alarm will sound. If this occurs, disarm the Vehicle Security Alarm.

If the Vehicle Security Alarm is armed and the battery becomes disconnected, the Vehicle Security Alarm will remain armed when the battery is reconnected; the exterior lights will flash, the horn will sound. If this occurs, disarm the Vehicle Security Alarm.

Tamper Alert

If something has triggered the Vehicle Security Alarm in your absence, the horn will sound three times and the exterior lights will blink three times when you disarm the Vehicle Security Alarm. Check the vehicle for tampering.

Security System Manual Override

The Vehicle Security Alarm will not arm if you lock the doors using the manual door lock plunger.

ILLUMINATED ENTRY

The courtesy lights will turn on when you use the Remote Keyless Entry (RKE) transmitter to unlock the doors or open any door or liftgate.

This feature also turns on the approach lighting in the outside mirrors (if equipped). Refer to “Mirrors” in “Understanding The Features Of Your Vehicle” for further information.

The interior lights will fade to off after approximately 30 seconds or they will immediately fade to off once the ignition is cycled to the ON/RUN position from the OFF position.

NOTE:

- The front courtesy overhead console and door courtesy lights will turn on if the dimmer control is in the "Dome ON" position (extreme top position).
- The Illuminated Entry system will not operate if the dimmer control is in the "Dome defeat" position (extreme bottom position).

REMOTE KEYLESS ENTRY (RKE)

The RKE system allows you to lock or unlock the doors, open the liftgate, or activate the Panic Alarm from distances up to approximately 66 ft (20 m) using a hand-held Key Fob with RKE transmitter. The RKE transmitter does not need to be pointed at the vehicle to activate the system.

NOTE: Driving at speeds 5 mph (8 km/h) and above disables the system from responding to all RKE transmitter buttons for all RKE transmitters.

Key Fob With RKE Transmitter

To Unlock The Doors And Liftgate

Push and release the UNLOCK button on the RKE transmitter once to unlock the driver's door or twice within five seconds to unlock all doors and liftgate. The turn signal lights will flash to acknowledge the unlock signal. The illuminated entry system will also turn on.

If the vehicle is equipped with Passive Entry, refer to "Keyless Enter-N-Go™" in "Things To Know Before Starting Your Vehicle" for further information.

1st Push Of Key Fob Unlocks

This feature lets you program the system to unlock either the driver's door or all doors on the first push of the UNLOCK button on the RKE transmitter. To change the current setting, refer to "Uconnect® Settings" in "Understanding Your Instrument Panel" for further information.

Flash Lamps With Lock

This feature will cause the turn signal lights to flash when the doors are locked or unlocked with the RKE transmitter. This feature can be turned on or turned off. To change the current setting, refer to "Uconnect® Settings" in "Understanding Your Instrument Panel" for further information.

Headlight Illumination On Approach

This feature activates the headlights for up to 90 seconds when the doors are unlocked with the RKE transmitter. The time for this feature is programmable on vehicles equipped through Uconnect®. To change the current setting, refer to "Uconnect® Settings" in "Understanding Your Instrument Panel" for further information.

To Lock The Doors And Liftgate

Push and release the LOCK button on the RKE transmitter to lock all doors and liftgate. The turn signal lights will flash and the horn will chirp to acknowledge the signal.

If the vehicle is equipped with Passive Entry, refer to "Keyless Enter-N-Go™" in "Things To Know Before Starting Your Vehicle" for further information.

Sound Horn With Lock

This feature will cause the horn to chirp when the doors are locked with the RKE transmitter. This feature can be turned on or turned off. To change the current setting, refer to "Uconnect® Settings" in "Understanding Your Instrument Panel" for further information.

Using The Panic Alarm

To turn the Panic Alarm feature on or off, push and hold the PANIC button on the RKE transmitter for at least one second and release. When the Panic Alarm is activated, the turn signals will flash, the horn will pulse on and off, and the interior lights will turn on.

The Panic Alarm will stay on for three minutes unless you turn it off by either pushing the PANIC button a second time or drive the vehicle at a speed of 15 mph (24 km/h) or greater.

NOTE:

- The interior lights will turn off if you cycle the ignition switch to the ACC or ON/RUN position while the Panic Alarm is activated. However, the exterior lights and horn will remain on.
- You may need to be less than 35 ft (11 m) from the vehicle when using the RKE transmitter to turn off the Panic Alarm due to the radio frequency noises emitted by the system.

Programming Additional Transmitters

Programming Key Fobs or RKE transmitters may be performed at an authorized dealer.

Transmitter Battery Replacement

The recommended replacement battery is one CR2032 battery.

NOTE:

- Perchlorate Material — special handling may apply. See www.dtsc.ca.gov/hazardouswaste/perchlorate
- Do not touch the battery terminals that are on the back housing or the printed circuit board.

1. Remove the emergency key by sliding the mechanical latch on the back of the RKE transmitter sideways with your thumb and then pull the key out with your other hand.

0202005474

Keyless Ignition Node (KIN) Emergency Key Removal

2. Insert the tip of the emergency key or a #2 flat blade screwdriver into the slot and gently pry the two halves

of the RKE transmitter apart. Make sure not to damage the seal during removal.

Separating RKE Transmitter Case

3. Remove the battery by turning the back cover over (battery facing downward) and tapping it lightly on a solid surface such as a table or similar, then replace the battery. When replacing the battery, match the + sign on the battery to the + sign on the inside of the battery clip, located on the back cover. Avoid touching the new battery with your fingers. Skin oils may cause battery deterioration. If you touch a battery, clean it with rubbing alcohol.
4. To assemble the RKE transmitter case, snap the two halves together.

General Information

This device complies with Part 15 of the FCC rules and RSS 210 of Industry Canada. Operation is subject to the following conditions:

- This device may not cause harmful interference.
- This device must accept any interference received, including interference that may cause undesired operation.

NOTE: Changes or modifications not expressly approved by the party responsible for compliance could void the user's authority to operate the equipment.

If your RKE transmitter fails to operate from a normal distance, check for these two conditions:

1. A weak battery in the transmitter. The expected life of the battery is a minimum of three years.
2. Closeness to a radio transmitter such as a radio station tower, airport transmitter, and some mobile or CB radios.

REMOTE STARTING SYSTEM — IF EQUIPPED

This system uses the Remote Keyless Entry (RKE) transmitter to start the engine conveniently from outside the vehicle while still maintaining security. The system has a range of approximately 300 ft (91 m).

NOTE:

- The vehicle must be equipped with an automatic transmission to be equipped with Remote Start.
- Obstructions between the vehicle and the Key Fob may reduce this range.

How To Use Remote Start

All of the following conditions must be met before the engine will remote start:

- Shift lever in PARK
- Doors closed
- Hood closed
- Liftgate closed
- HAZARD switch off
- BRAKE switch inactive (brake pedal not pushed)

- Battery at an acceptable charge level
- RKE PANIC button not pushed
- System not disabled from previous remote start event
- Vehicle Security Alarm not active
- Ignition in OFF position

WARNING!

- **Do not start or run an engine in a closed garage or confined area. Exhaust gas contains Carbon Monoxide (CO) which is odorless and colorless. Carbon Monoxide is poisonous and can cause serious injury or death when inhaled.**
- **Keep Remote Keyless Entry (RKE) transmitters away from children. Operation of the Remote Start System, windows, door locks or other controls could cause serious injury or death.**

Remote Start Abort Message On Electronic Vehicle Information Center (EVIC) — If Equipped

The following messages will display in the EVIC if the vehicle fails to remote start or exits remote start prematurely:

- Remote Start Aborted — Door Ajar
- Remote Start Aborted — Hood Ajar
- Remote Start Aborted — Fuel Low
- Remote Start Aborted — L/Gate Ajar
- Remote Start Disabled — Start Vehicle To Reset

The EVIC message stays active until the ignition is cycled to the ON/RUN position.

To Enter Remote Start Mode

Push and release the REMOTE START button on the RKE transmitter twice within five seconds. The vehicle doors will lock, the parking lights will flash and the horn will chirp twice (if programmed). Then, the engine will start and the vehicle will remain in the Remote Start mode for a 15-minute cycle.

NOTE:

- If an engine fault is present or fuel level is low, the vehicle will start and then shut down in 10 seconds.
- The park lamps will turn on and remain on during Remote Start mode.
- For security, power window and power sunroof operation (if equipped) are disabled when the vehicle is in the Remote Start mode.
- The engine can be started two consecutive times (two 15-minute cycles) with the RKE transmitter. However, the ignition must be cycled to the RUN position before you can repeat the start sequence for a third cycle.

To Exit Remote Start Mode Without Driving The Vehicle

Push and release the REMOTE START button one time or allow the engine to run for the entire 15-minute cycle.

NOTE: To avoid unintentional shutdowns, the system will disable the one time push of the REMOTE START button for two seconds after receiving a valid Remote Start request.

To Exit Remote Start Mode And Drive The Vehicle

Before the end of 15-minute cycle, push and release the UNLOCK button on the RKE transmitter to unlock the doors and disarm the Vehicle Security Alarm (if

equipped). Then, prior to the end of the 15-minute cycle, push and release the START/STOP button.

NOTE: The message "Push Start Button" will display in the EVIC until you push the START button.

Remote Start Comfort Systems — If Equipped

When remote start is activated, the driver heated seat feature will automatically turn on in cold weather. This feature will stay on through the duration of remote start or until the ignition switch is turned to the ON/RUN position.

The Remote Start Comfort System can be activated and deactivated through the Uconnect® system. For more information on Remote Start Comfort System operation refer to "Uconnect® Settings — Customer Programmable Features" in "Understanding Your Instrument Panel".

DOOR LOCKS

Manual Door Locks

To lock each door, push the door lock knob on each door trim panel downward. To unlock the front doors, pull the inside door handle to the first detent. To unlock the rear doors, pull the door lock knob on the door trim panel upward.

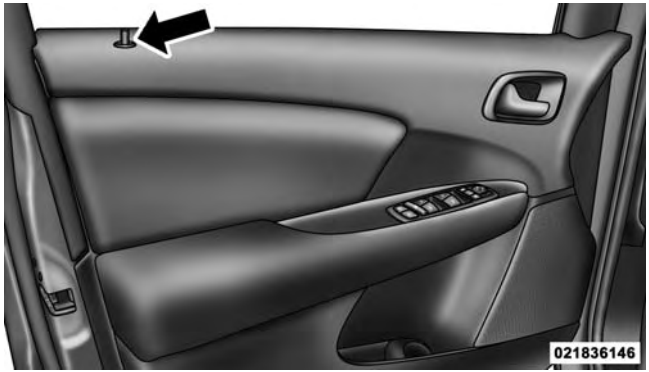

Manual Door Lock Knob

If the door lock knob is down when you shut the door, the door will lock. Therefore, make sure the Key Fob is not inside the vehicle before closing the door.

NOTE: The manual door locks will not lock or unlock the liftgate.

WARNING!

- **For personal security and safety in the event of a collision, lock the vehicle doors before you drive as well as when you park and leave the vehicle.**
- **When leaving the vehicle, always remove the Key Fob from the vehicle and lock your vehicle. Unsupervised use of vehicle equipment may cause severe personal injuries or death.**
- **Never leave children alone in a vehicle, or with access to an unlocked vehicle. Allowing children to be in a vehicle unattended is dangerous for a number of reasons. A child or others could be seriously or fatally injured. Children should be warned not to touch the parking brake, brake pedal or the transmission gear selector.**

(Continued)

WARNING! *(Continued)*

- **Do not leave the Key Fob in or near the vehicle or in a location accessible to children, and do not leave the ignition of a vehicle equipped with Keyless Enter-N-Go™ in the in the ACC or ON/RUN mode. A child could operate power windows, other controls, or move the vehicle.**

Power Door Locks

A power door lock switch is on each front door trim panel. Use this switch to lock or unlock the doors and liftgate.

Power Door Lock Switch Location

The doors can also be locked and unlocked with the Keyless Enter-N-Go™ (Passive Entry) system. For further information, refer to "Keyless Enter-N-Go™" in "Things To Know Before Starting Your Vehicle".

If you push the power door lock switch, with the ignition in the ON/RUN or ACC position and any front door is open, the power locks will not operate. This prevents you from accidentally locking the Key Fob in the vehicle. Turning off the ignition or closing the door will allow the locks to operate. If a door is open, and the ignition is in the ON/RUN or ACC position, a chime will sound as a reminder to remove the Key Fob.

Automatic Door Locks — If Equipped

The auto door lock feature default condition is enabled. When enabled, the door locks will lock automatically when the vehicle's speed exceeds 15 mph (24 km/h). The auto door lock feature can be enabled or disabled by your authorized dealer or through the Uconnect® Settings in your radio.

Auto Unlock On Exit

The doors will unlock automatically on vehicles with power door locks if:

1. The Automatic Unlock Doors On Exit feature is enabled.
2. The transmission was in gear and the vehicle speed returned to 0 mph (0 km/h).
3. The transmission is in PARK.
4. Any vehicle door is opened.
5. The doors were not previously unlocked.
6. The vehicle speed is 0 mph (0 km/h).

To change the current setting, refer to "Uconnect® Settings" in "Understanding Your Instrument Panel" for further information.

NOTE: Use the Automatic Unlock Doors On Exit feature in accordance with local laws.

Child-Protection Door Lock System — Rear Doors

To provide a safer environment for small children riding in the rear seats, the rear doors are equipped with a Child-Protection Door Lock system.

To Engage The Child-Protection Door Lock System

1. Open the rear door.
2. Insert the tip of the emergency key (or alike) into the child lock control and rotate it to the LOCK position.

Child-Protection Door Lock Location

Child-Protection Door Lock Function

3. Repeat steps 1 and 2 for the opposite rear door.

NOTE: When the Child-Protection Door Lock system is engaged, the door can be opened only by using the outside door handle even though the inside door lock is in the unlocked position.

WARNING!

Avoid trapping anyone in a vehicle in a collision. Remember that the rear doors can only be opened from the outside when the Child-Protection locks are engaged. Failure to follow this warning may result in serious injury or death.

NOTE:

- After engaging the Child-Protection Door Lock system, always test the door from the inside to make certain it is in the desired position.
- For emergency exit with the system engaged, move the lock knob up to the UNLOCK position, roll down the window, and open the door with the outside door handle.

To Disengage The Child-Protection Door Lock System

1. Open the rear door.
2. Insert the tip of the emergency key (or alike) into the child lock control and rotate it to the UNLOCK position.

Child-Protection Door Lock Function

3. Repeat steps 1 and 2 for the opposite rear door.

NOTE: After disengaging the Child-Protection Door Lock system, always test the door from the inside to make certain it is in the desired position.

KEYLESS ENTER-N-GO™

The Passive Entry system is an enhancement to the vehicle's Remote Keyless Entry (RKE) system and a feature of Keyless Enter-N-Go™. This feature allows you to lock and unlock the vehicle's door(s) without having to push the RKE transmitter lock or unlock buttons.

NOTE:

- Passive Entry may be programmed ON/OFF; refer to "Uconnect® Settings" in "Understanding Your Instrument Panel" for further information.

- If wearing gloves on your hands, or if it has been raining on the Passive Entry door handle, the unlock sensitivity can be affected, resulting in a slower response time.
- If the vehicle is unlocked by the RKE transmitter or Passive Entry and no door goes ajar within 60 seconds, the vehicle will re-lock and if equipped will arm the security alarm.

To Unlock From The Driver's Side:

With a valid Passive Entry RKE transmitter within 5 ft (1.5 m) of the driver's door handle, grab the driver's front door handle to unlock the driver's door automatically. The interior door panel lock knob will raise when the door is unlocked.

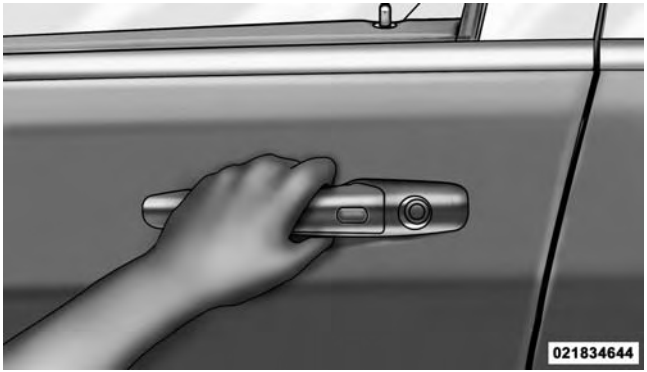

Grabbing The Driver's Door Handle

NOTE: If "Unlock All Doors 1st Push" is programmed all doors will unlock when you grab hold of the driver's front door handle. To select between "Unlock Driver Door 1st Push" and "Unlock All Doors 1st Push", refer to "Electronic Vehicle Information Center (EVIC)/Personal

Settings (Customer-Programmable Features)" in "Understanding Your Instrument Panel" for further information.

To Unlock From The Passenger Side:

With a valid Passive Entry RKE transmitter within 5 ft (1.5 m) of the passenger door handle, grab the front passenger door handle to unlock all four doors and the liftgate automatically.

NOTE: All doors and the liftgate will unlock when the front passenger door handle is grabbed regardless of the driver's door unlock preference setting ("Unlock Driver Door 1st Push" or "Unlock All Doors 1st Push").

Preventing Inadvertent Locking Of Passive Entry RKE Transmitter In Vehicle

To minimize the possibility of unintentionally locking a Passive Entry RKE transmitter inside your vehicle, the Passive Entry system is equipped with an automatic door unlock feature which will function if the ignition is OFF.

If one of the vehicle doors is open and the door panel switch is used to lock the vehicle, once all open doors have been closed the vehicle checks the inside and outside of the vehicle for any valid Passive Entry RKE transmitters. If one of the vehicle's Passive Entry RKE transmitters is detected inside the vehicle, and no other valid Passive Entry RKE transmitters are detected outside the vehicle, the Passive Entry System automatically unlocks all vehicle doors and chirps the horn three times (on the third attempt ALL doors will lock and the Passive Entry RKE transmitter can be locked in the vehicle).

To Enter The Liftgate

With a valid Passive Entry RKE transmitter within 3 ft (1.0 m) of the liftgate, push the button underneath the left side of the accent bar, which is located on the liftgate below the glass, to lock or unlock the vehicle.

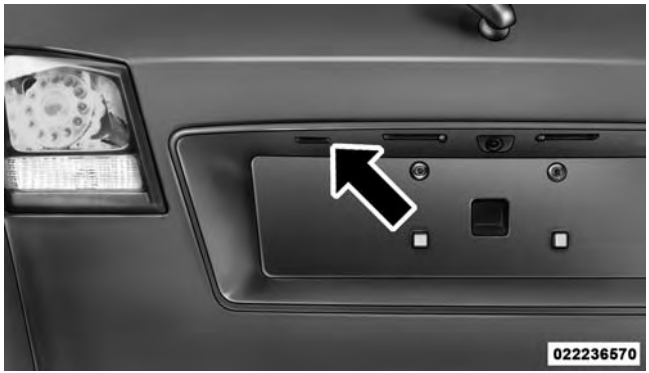

Liftgate Unlock/Lock Button

To Lock The Vehicle's Doors

With one of the vehicle's Passive Entry RKE transmitters within 5 ft (1.5 m) of the driver or passenger front door handle, push the door handle LOCK button to lock all four doors and liftgate.

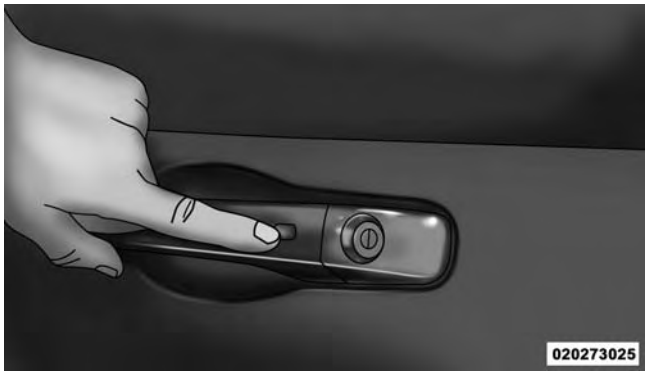

Push The Door Handle Button To Lock

Do NOT grab the door handle, when pushing the door handle button. This could unlock the door(s).

Do NOT Grab The Door Handle When Locking

NOTE:

- After pushing the door handle button, you must wait two seconds before you can lock or unlock the doors, using either Passive Entry door handle. This is done to allow you to check if the vehicle is locked by pulling the door handle, without the vehicle reacting and unlocking.
- If Passive Entry is disabled using Uconnect® System, the key protection described in "Preventing Inadvertent Locking of Passive Entry RKE Transmitter in Vehicle" remains active/functional.
- The Passive Entry system will not operate if the RKE transmitter battery is dead.

The vehicle doors can also be locked by using the RKE transmitter lock button or the lock button located on the vehicle's interior door panel.

WINDOWS

Power Windows

The window controls on the driver's door trim panel control all of the door windows.

Power Window Switches

There are single window controls on each passenger door trim panel, which operate the passenger door windows. The window controls will operate when the ignition is in the ON/RUN or ACC position.

NOTE: For vehicles equipped with the Uconnect®, the power window switches will remain active for up to 10 minutes after the ignition is cycled to the OFF position. Opening either front door will cancel this feature. The time is programmable. Refer to "Uconnect® Settings" in "Understanding Your Instrument Panel" for further information.

WARNING!

Never leave children unattended in a vehicle. Do not leave the Key Fob in or near the vehicle or in a location accessible to children, and do not leave the

(Continued)

WARNING! ***(Continued)***

ignition of a vehicle equipped with Keyless Enter-N-Go™ in the ACC or ON/RUN mode. Occupants, particularly unattended children, can become entrapped by the windows while operating the power window switches. Such entrapment may result in serious injury or death.

Auto-Down Feature

The driver's power window switch has an Auto-down feature. Push the window switch past the first detent, release, and the window will go down automatically.

To open the window part way, push the window switch to the first detent and release it when you want the window to stop.

To stop the window from going all the way down during the Auto-down operation, pull up on the switch briefly.

Auto-Up Feature With Anti-Pinch Protection

On some models, the driver and front passenger power window switches have an Auto-up feature. Pull the window switch up to the second detent, release, and the window will go up automatically.

To stop the window from going all the way up during the Auto-up operation, push down on the switch briefly.

To close the window part way, pull the window switch up to the first detent and release it when you want the window to stop.

NOTE:

- If the window runs into any obstacle during Auto-closure, it will reverse direction and then go back down. Remove the obstacle and use the window switch again to close the window.
- Any impact due to rough road conditions may trigger the auto-reverse function unexpectedly during auto-closure. If this happens, pull the switch lightly to the first detent and hold to close window manually.

WARNING!

There is no anti-pinch protection when the window is almost closed. To avoid personal injury, be sure to clear your arms, hands, fingers, and objects from the window path before closing the window. Such entrapment may result in serious injury.

Reset Auto-Up

Should the Auto Up feature stop working, the window probably needs to be reset. To reset Auto Up:

1. Pull the window switch up to close the window completely and continue to hold the switch up for an additional two seconds after the window is closed.
2. Push the window switch down firmly to the second detent to open the window completely and continue to hold the switch down for an additional two seconds after the window is fully open.

Window Lockout Switch

The window lockout switch on the driver's door trim panel allows you to disable the window control on the rear passenger doors. To disable the window controls, push and release the window lockout button (setting it in

the down position). To enable the window controls, push and release the window lockout button again (setting it in the up position).

Window Lockout Switch

Wind Buffeting

Wind buffeting can be described as the perception of pressure on the ears or a helicopter-type sound in the ears. Your vehicle may exhibit wind buffeting with the windows down, or the sunroof (if equipped) in certain open or partially open positions. This is a normal occurrence and can be minimized. If the buffeting occurs with the rear windows open, then open the front and rear windows together to minimize the buffeting. If the buffeting occurs with the sunroof open, adjust the sunroof opening to minimize the buffeting.

LIFTGATE

The liftgate can be unlocked or locked pushing the UNLOCK or LOCK button on the Remote Keyless Entry (RKE) transmitter, the Keyless Enter-N-Go™ (Passive Entry) LOCK/UNLOCK button underneath the left side of the accent bar, which is located on the liftgate below the glass or by activating the power door lock switch located on either front door trim panel.

For further information on Keyless Enter-N-Go™ (Passive Entry), refer to "Keyless Enter-N-Go™" in "Things To Know Before Starting Your Vehicle".

NOTE: The liftgate cannot be unlocked or locked with the manual door lock plungers on the door trim panels or the door lock cylinder on the driver's door.

To open the unlocked liftgate, squeeze the handle and pull the liftgate toward you. Gas props will raise and support the liftgate in the open position.

NOTE:

- In the event of a power malfunction to the liftgate, an emergency liftgate latch release can be used to open the liftgate. The emergency liftgate latch release can be accessed through a snap-in cover located on the liftgate trim panel.
- If liftgate is left open for an extended period of time, the liftgate may need to be closed manually to reset power liftgate functionality.

Liftgate Release

NOTE: Because the gas pressure drops with temperature, it may be necessary to assist the props when opening the liftgate in cold weather.

WARNING!

- **Driving with the liftgate open can allow poisonous exhaust gases into your vehicle. These fumes could injure you and your passengers. Keep the liftgate closed when you are operating the vehicle.**
- **If you are required to drive with the liftgate open, make sure that all windows are closed, and the blower switch on the climate control is set at high speed. Do not use the recirculation mode.**

OCCUPANT RESTRAINT SYSTEMS

Some of the most important safety features in your vehicle are the restraint systems:

- Seat Belt Systems
- Supplemental Restraint Systems (SRS) Air Bags
- Supplemental Active Head Restraints
- Child Restraints

Important Safety Precautions

Please pay close attention to the information in this section. It tells you how to use your restraint system properly, to keep you and your passengers as safe as possible.

Here are some simple steps you can take to minimize the risk of harm from a deploying air bag:

1. Children 12 years old and under should always ride buckled up in a vehicle with a rear seat.
2. If a child from 2 to 12 years old (not in a rear-facing child restraint) must ride in the front passenger seat, move the seat as far back as possible and use the proper child restraint. (Refer to “Child Restraints”)

3. Children that are not big enough to wear the vehicle seat belt properly (Refer to "Child Restraints") should be secured in a vehicle with a rear seat in child restraints or belt-positioning booster seats. Older children who do not use child restraints or belt-positioning booster seats should ride properly buckled up in a vehicle with a rear seat.
4. Never allow children to slide the shoulder belt behind them or under their arm.
5. You should read the instructions provided with your child restraint to make sure that you are using it properly.
6. All occupants should always wear their lap and shoulder belts properly.
7. The driver and front passenger seats should be moved back as far as practical to allow the Advanced Front Air Bags room to inflate.
8. Do not lean against the door or window. If your vehicle has side air bags, and deployment occurs, the side air bags will inflate forcefully into the space between you and the door and you could be injured.
9. If the air bag system in this vehicle needs to be modified to accommodate a disabled person, contact the Customer Center. Phone numbers are provided under "If You Need Assistance."

WARNING!

- **Never place a rear-facing child restraint in front of an air bag. A deploying Passenger Advanced Front Air Bag can cause death or serious injury to a child 12 years or younger, including a child in a rear-facing child restraint.**
- **Only use rear-facing child restraint in a vehicle with a rear seat.**

Seat Belt Systems

Buckle up even though you are an excellent driver, even on short trips. Someone on the road may be a poor driver and could cause a collision that includes you. This can happen far away from home or on your own street.

Research has shown that seat belts save lives, and they can reduce the seriousness of injuries in a collision. Some of the worst injuries happen when people are thrown from the vehicle. Seat belts reduce the possibility of ejection and the risk of injury caused by striking the inside of the vehicle. Everyone in a motor vehicle should be belted at all times.

Enhanced Seat Belt Use Reminder System (BeltAlert®)

BeltAlert® is a feature intended to remind the driver and outboard front passenger (if equipped with outboard front passenger BeltAlert®) to buckle their seat belts. The feature is active whenever the ignition switch is in the START or ON/RUN position. If the driver or outboard front seat passenger is unbelted, the Seat Belt Reminder Light will turn on and remain on until both outboard front seat belts are buckled.

The BeltAlert® warning sequence begins after the vehicle speed is over 5 mph (8 km/h) by blinking the Seat Belt Reminder Light and sounding an intermittent chime. Once the sequence starts, it will continue for the entire duration or until the respective seat belts are buckled. After the sequence completes, the Seat Belt Reminder Light remains illuminated until the respective seat belts are buckled. The driver should instruct all other occupants to buckle their seat belts. If an outboard front seat belt is unbuckled while traveling at speeds greater than 5 mph (8 km/h), BeltAlert® will provide both audio and visual notification.

The outboard front passenger seat BeltAlert® is not active when the outboard front passenger seat is unoccupied. BeltAlert® may be triggered when an animal or heavy object is on the outboard front passenger seat or when the seat is folded flat (if equipped). It is recommended that pets be restrained in the rear seat (if equipped) in pet harnesses or pet carriers that are secured by seat belts, and cargo is properly stowed.

BeltAlert® can be activated or deactivated by your authorized dealer. Chrysler Group LLC does not recommend deactivating BeltAlert®.

NOTE: If BeltAlert® has been deactivated, the Seat Belt Reminder Light will continue to illuminate while the driver's or outboard front passenger's (if equipped with BeltAlert®) seat belt remains unbuckled.

Lap/Shoulder Belts

All seating positions in your vehicle are equipped with lap/shoulder belts.

The seat belt webbing retractor will lock only during very sudden stops or collisions. This feature allows the shoulder part of the seat belt to move freely with you under normal conditions. However, in a collision the seat belt will lock and reduce your risk of striking the inside of the vehicle or being thrown out of the vehicle.

WARNING!

- **Relying on the air bags alone could lead to more severe injuries in a collision. The air bags work with your seat belt to restrain you properly. In some collisions, the air bags won't deploy at all. Always wear your seat belt even though you have air bags.**

(Continued)

WARNING! *(Continued)*

- **In a collision, you and your passengers can suffer much greater injuries if you are not properly buckled up. You can strike the interior of your vehicle or other passengers, or you can be thrown out of the vehicle. Always be sure you and others in your vehicle are buckled up properly.**
- **It is dangerous to ride in a cargo area, inside or outside of a vehicle. In a collision, people riding in these areas are more likely to be seriously injured or killed.**
- **Do not allow people to ride in any area of your vehicle that is not equipped with seats and seat belts.**
- **Be sure everyone in your vehicle is in a seat and using a seat belt properly.**

(Continued)

WARNING! *(Continued)*

- **Wearing your seat belt incorrectly could make your injuries in a collision much worse. You might suffer internal injuries, or you could even slide out of the seat belt. Follow these instructions to wear your seat belt safely and to keep your passengers safe, too.**
- **Two people should never be belted into a single seat belt. People belted together can crash into one another in a collision, hurting one another badly. Never use a lap/shoulder belt or a lap belt for more than one person, no matter what their size.**
- **A lap belt worn too high can increase the risk of injury in a collision. The seat belt forces won't be at the strong hip and pelvic bones, but across your abdomen. Always wear the lap part of your seat belt as low as possible and keep it snug.**

(Continued)

WARNING! *(Continued)*

- **A twisted seat belt may not protect you properly. In a collision, it could even cut into you. Be sure the seat belt is flat against your body, without twists. If you can't straighten a seat belt in your vehicle, take it to your authorized dealer immediately and have it fixed.**
- **A seat belt that is buckled into the wrong buckle will not protect you properly. The lap portion could ride too high on your body, possibly causing internal injuries. Always buckle your seat belt into the buckle nearest you.**
- **A seat belt that is too loose will not protect you properly. In a sudden stop, you could move too far forward, increasing the possibility of injury. Wear your seat belt snugly.**

(Continued)

WARNING! *(Continued)*

- **A seat belt that is worn under your arm is dangerous. Your body could strike the inside surfaces of the vehicle in a collision, increasing head and neck injury. A seat belt worn under the arm can cause internal injuries. Ribs aren't as strong as shoulder bones. Wear the seat belt over your shoulder so that your strongest bones will take the force in a collision.**
- **A shoulder belt placed behind you will not protect you from injury during a collision. You are more likely to hit your head in a collision if you do not wear your shoulder belt. The lap and shoulder belt are meant to be used together.**

(Continued)

WARNING! *(Continued)*

- **A frayed or torn seat belt could rip apart in a collision and leave you with no protection. Inspect the seat belt system periodically, checking for cuts, frays, or loose parts. Damaged parts must be replaced immediately. Do not disassemble or modify the seat belt system. Seat belt assemblies must be replaced after a collision.**

Lap/Shoulder Belt Operating Instructions

1. Enter the vehicle and close the door. Sit back and adjust the seat.
2. The seat belt latch plate is above the back of the front seat, and next to your arm in the rear seat (for vehicles equipped with a rear seat). Grasp the latch plate and pull out the seat belt. Slide the latch plate up the webbing as far as necessary to allow the seat belt to go around your lap.

Pulling Out The Latch Plate

3. When the seat belt is long enough to fit, insert the latch plate into the buckle until you hear a “click.”

Inserting Latch Plate Into Buckle

Positioning The Lap Belt

4. Position the lap belt so that it is snug and lies low across your hips, below your abdomen. To remove slack in the lap belt portion, pull up on the shoulder belt. To loosen the lap belt if it is too tight, tilt the latch plate and pull on the lap belt. A snug seat belt reduces the risk of sliding under the seat belt in a collision.
5. Position the shoulder belt across the shoulder and chest with minimal, if any slack so that it is comfortable and not resting on your neck. The retractor will withdraw any slack in the shoulder belt.
6. To release the seat belt, push the red button on the buckle. The seat belt will automatically retract to its

stowed position. If necessary, slide the latch plate down the webbing to allow the seat belt to retract fully.

Lap/Shoulder Belt Untwisting Procedure

Use the following procedure to untwist a twisted lap/shoulder belt.

1. Position the latch plate as close as possible to the anchor point.
2. At about 6 to 12 in (15 to 30 cm) above the latch plate, grasp and twist the seat belt webbing 180° to create a fold that begins immediately above the latch plate.
3. Slide the latch plate upward over the folded webbing. The folded webbing must enter the slot at the top of the latch plate.
4. Continue to slide the latch plate up until it clears the folded webbing and the seat belt is no longer twisted.

Adjustable Upper Shoulder Belt Anchorage

In the driver and front passenger seats, the top of the shoulder belt can be adjusted upward or downward to position the seat belt away from your neck. Push or squeeze the anchorage button to release the anchorage, and move it up or down to the position that serves you best.

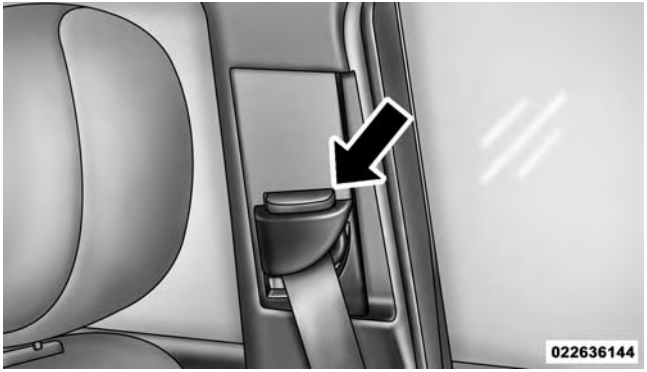

Adjustable Anchorage

As a guide, if you are shorter than average, you will prefer the shoulder belt anchorage in a lower position, and if you are taller than average, you will prefer the shoulder belt anchorage in a higher position. After you release the anchorage button, try to move it up or down to make sure that it is locked in position.

NOTE: The adjustable upper shoulder belt anchorage is equipped with an Easy Up feature. This feature allows the shoulder belt anchorage to be adjusted in the upward position without pushing or squeezing the release button. To verify the shoulder belt anchorage is latched, pull downward on the shoulder belt anchorage until it is locked into position.

Seat Belt Extender

If a seat belt is not long enough to fit properly, even when the webbing is fully extended and the adjustable upper shoulder belt anchorage (if equipped) is in its lowest position, your authorized dealer can provide you with a Seat Belt Extender. The Seat Belt Extender should be used only if the existing seat belt is not long enough. When the Seat Belt Extender is not required for a different occupant, it must be removed.

WARNING!

- **ONLY use a Seat Belt Extender if it is physically required in order to properly fit the original seat belt system. DO NOT USE the Seat Belt Extender if, when worn, the distance between the front edge of the Seat Belt Extender buckle and the center of the occupant's body is LESS than 6 inches.**
- **Using a Seat Belt Extender when not needed can increase the risk of serious injury or death in a collision. Only use the Seat Belt Extender when the lap belt is not long enough and only use in the recommended seating positions. Remove and store the Seat Belt Extender when not needed.**

Seat Belts And Pregnant Women

We recommend that pregnant women use the seat belts throughout their pregnancy. Keeping the mother safe is the best way to keep the baby safe.

Pregnant women should wear the lap part of the seat belt across the thighs and as snug across the hips as possible. Keep the seat belt low so that it does not come across the abdomen. That way the strong bones of the hips will take the force if there is a collision.

Seat Belt Pretensioner

The front seat belt system is equipped with pretensioning devices that are designed to remove slack from the seat belt in the event of a collision. These devices may improve the performance of the seat belt by removing slack from the seat belt early in a collision. Pretensioners work for all size occupants, including those in child restraints.

NOTE: These devices are not a substitute for proper seat belt placement by the occupant. The seat belt still must be worn snugly and positioned properly.

The pretensioners are triggered by the Occupant Restraint Controller (ORC). Like the air bags, the pretensioners are single use items. A deployed pretensioner or a deployed air bag must be replaced immediately.

Energy Management Feature

This vehicle has a seat belt system with an Energy Management feature in the front seating positions that may help further reduce the risk of injury in the event of a collision. This seat belt system has a retractor assembly that is designed to release webbing in a controlled manner.

Automatic Locking Retractor (ALR) — If Equipped

The seat belts in the passenger seating positions may be equipped with a Switchable Automatic Locking Retractors (ALR) which is used to secure a child restraint system. For additional information, refer to "Installing Child Restraints Using The Vehicle Seat Belt" under the "Child Restraints" section of this manual. The table below defines the type of feature for each seating position.

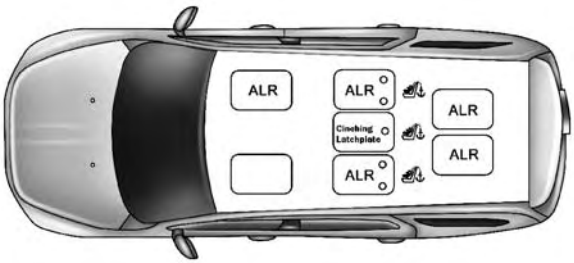

Third Row Shown — If Equipped

- ALR= Switchable Automatic Locking Retractor

If the passenger seating position is equipped with an ALR and is being used for normal usage:

Only pull the seat belt webbing out far enough to comfortably wrap around the occupant's mid-section so

as to not activate the ALR. If the ALR is activated, you will hear a clicking sound as the seat belt retracts. Allow the webbing to retract completely in this case and then carefully pull out only the amount of webbing necessary to comfortably wrap around the occupant's mid-section. Slide the latch plate into the buckle until you hear a "click."

In Automatic Locking Mode, the shoulder belt is automatically prelocked. The seat belt will still retract to remove any slack in the shoulder belt. The Automatic Locking Mode is available on all passenger seating positions with a combination lap/shoulder belt. Use the Automatic Locking Mode anytime a child restraint is installed in a seating position that has a seat belt with this feature. Children 12 years old and under should always be properly restrained in a vehicle with a rear seat.

WARNING!

- **Never place a rear-facing child restraint in front of an air bag. A deploying Passenger Advanced Front Air Bag can cause death or serious injury to a child 12 years or younger, including a child in a rear-facing child restraint.**
- **Only use rear-facing child restraint in a vehicle with a rear seat.**

How To Engage The Automatic Locking Mode

1. Buckle the combination lap and shoulder belt.
2. Grasp the shoulder portion and pull downward until the entire seat belt is extracted.
3. Allow the seat belt to retract. As the seat belt retracts, you will hear a clicking sound. This indicates the seat belt is now in the Automatic Locking Mode.

How To Disengage The Automatic Locking Mode

Unbuckle the combination lap/shoulder belt and allow it to retract completely to disengage the Automatic Locking Mode and activate the vehicle sensitive (emergency) locking mode.

WARNING!

- **The seat belt assembly must be replaced if the switchable Automatic Locking Retractor (ALR) feature or any other seat belt function is not working properly when checked according to the procedures in the Service Manual.**
- **Failure to replace the seat belt assembly could increase the risk of injury in collisions.**

(Continued)

WARNING! ***(Continued)***

- **Do not use the Automatic Locking Mode to restrain occupants who are wearing the seat belt or children who are using booster seats. The locked mode is only used to install rear-facing or forward-facing child restraints that have a harness for restraining the child.**

Supplemental Active Head Restraints (AHR)

These head restraints are passive, deployable components, and vehicles with this equipment cannot be readily identified by any markings, only through visual inspection of the head restraint. The head restraint will be split in two halves, with the front half being soft foam and trim, the back half being decorative plastic.

How The Active Head Restraints (AHR) Work

The Occupant Restraint Controller (ORC) determines whether the severity, or type of rear impact will require the Active Head Restraints (AHR) to deploy. If a rear impact requires deployment, both the driver and front passenger seat AHRs will be deployed.

When AHRs deploy during a rear impact, the front half of the head restraint extends forward to minimize the gap between the back of the occupant's head and the AHR. This system is designed to help prevent or reduce the extent of injuries to the driver and front passenger in certain types of rear impacts.

NOTE: The Active Head Restraints (AHR) may or may not deploy in the event of a front or side impact. However if during a front impact, a secondary rear impact occurs, the AHR may deploy based on the severity and type of the impact.

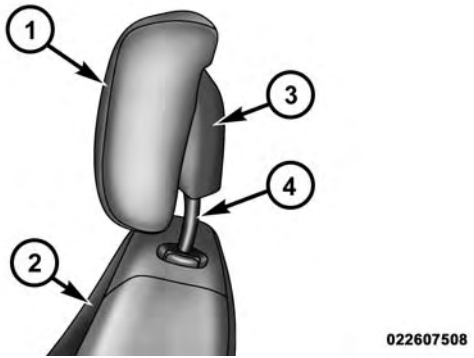

Active Head Restraint (AHR) Components

1 — Head Restraint Front Half (Soft Foam and Trim)	3 — Head Restraint Back Half (Decorative Plastic Rear Cover)
2 — Seatback	4 — Head Restraint Guide Tubes

WARNING!

All occupants, including the driver, should not operate a vehicle or sit in a vehicle's seat until the head restraints are placed in their proper positions in order to minimize the risk of neck injury in the event of a collision.

NOTE: For more information on properly adjusting and positioning the head restraint, refer to "Adjusting Active Head Restraints" in "Understanding The Features Of Your Vehicle."

Resetting Active Head Restraints (AHR)

If the Active Head Restraints are triggered in a collision, you must reset the head restraint on the driver's and front passenger's seat before driving. You can recognize when the Active Head Restraint has been triggered by the fact that they have moved forward (as shown in step three of the resetting procedure).

1. Grasp the deployed AHR from the rear seat.

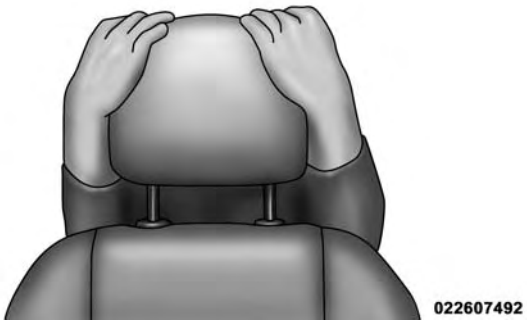

Hand Positioning Points On AHR

2. Position the hands on the top of the deployed AHR at a comfortable position.

3. Pull down then rearward towards the rear of the vehicle then down to engage the locking mechanism.

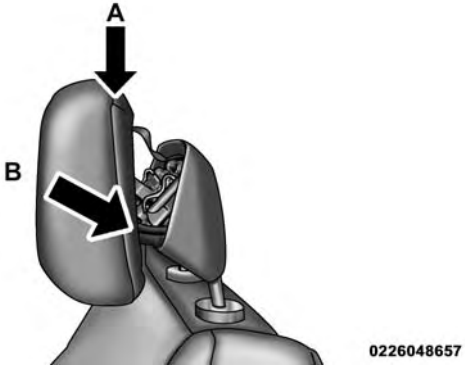

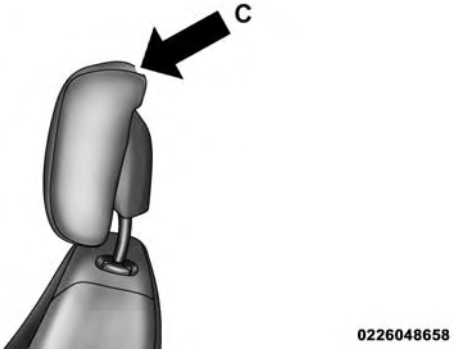

Review Table Below

A — Downward Movement
B — Rearward Movement
C — Final Downward Movement To Engage Locking Mechanism

4. The AHR front soft foam and trim half should lock into the back decorative plastic half.

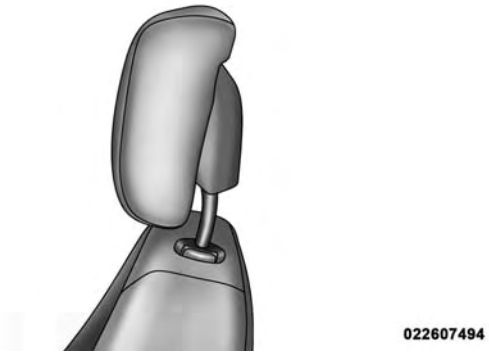

AHR In Reset Position

NOTE:

- If you have difficulties or problems resetting the Active Head Restraints, see an authorized dealer.
- For safety reasons, have the Active Head Restraints checked by a qualified specialist at an authorized dealer.

Supplemental Restraint System (SRS)

Air Bag System Components

Your vehicle may be equipped with the following air bag system components:

- Occupant Restraint Controller (ORC)
- Air Bag Warning Light
- Steering Wheel and Column
- Instrument Panel
- Knee Impact Bolsters
- Advanced Front Air Bags
- Supplemental Side Air Bags

- Supplemental Knee Air Bags
- Front and Side Impact Sensors
- Seat Belt Pretenioners
- Seat Belt Buckle Switch
- Seat Track Position Sensors

Advanced Front Air Bags

This vehicle has Advanced Front Air Bags for both the driver and front passenger as a supplement to the seat belt restraint systems. The driver's Advanced Front Air Bag is mounted in the center of the steering wheel. The passenger's Advanced Front Air Bag is mounted in the instrument panel, above the glove compartment. The words SRS AIRBAG are embossed on the air bag covers.

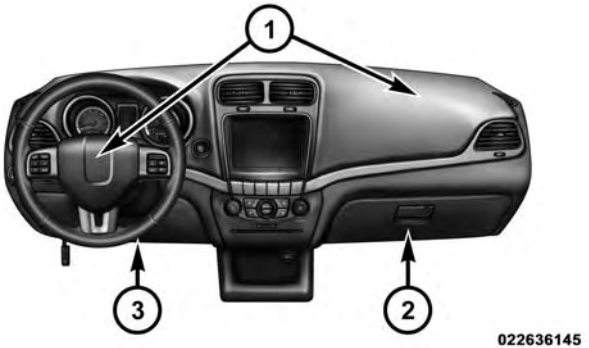

Advanced Front Air Bag And Knee Bolster Locations

1 — Driver And Passenger Advanced Front Air Bags
2 — Passenger Knee Impact Bolster
3 — Supplemental Driver Knee Air Bag/Driver Knee Impact Bolster

WARNING!

- **Being too close to the steering wheel or instrument panel during Advanced Front Air Bag deployment could cause serious injury, including death. Air bags need room to inflate. Sit back, comfortably extending your arms to reach the steering wheel or instrument panel.**
- **Never place a rear-facing child restraint in front of an air bag. A deploying Passenger Advanced Front Air Bag can cause death or serious injury to a child 12 years or younger, including a child in a rear-facing child restraint.**
- **Only use a rear-facing child restraint in a vehicle with a rear seat.**

Advanced Front Air Bag Features

The Advanced Front Air Bag system has multistage driver and front passenger air bags. This system provides output appropriate to the severity and type of collision as determined by the Occupant Restraint Controller (ORC), which may receive information from the front impact sensors or other system components.

The first stage inflator is triggered immediately during an impact that requires air bag deployment. A low energy output is used in less severe collisions. A higher energy output is used for more severe collisions.

This vehicle may be equipped with driver and/or front passenger seat track position sensors that may adjust the inflation rate of the Advanced Front Air Bags based upon seat position.

This vehicle may be equipped with a driver and/or front passenger seat belt buckle switch that detects whether the driver or front passenger seat belt is buckled. The seat belt buckle switch may adjust the inflation rate of the Advanced Front Air Bags.

WARNING!

- **No objects should be placed over or near the air bag on the instrument panel or steering wheel, because any such objects could cause harm if the vehicle is in a collision severe enough to cause the air bags to inflate.**
- **Do not put anything on or around the air bag covers or attempt to open them manually. You may damage the air bags and you could be injured because the air bags may no longer be functional. The protective covers for the air bag cushions are designed to open only when the air bags are inflating.**

(Continued)

WARNING! ***(Continued)***

- **Relying on the air bags alone could lead to more severe injuries in a collision. The air bags work with your seat belt to restrain you properly. In some collisions, air bags won't deploy at all. Always wear your seat belts even though you have air bags.**

Advanced Front Air Bag Operation

Advanced Front Air Bags are designed to provide additional protection by supplementing the seat belts. Advanced Front Air Bags are not expected to reduce the risk of injury in rear, side, or rollover collisions. The Advanced Front Air Bags will not deploy in all frontal collisions, including some that may produce substantial vehicle damage — for example, some pole collisions, truck underrides, and angle offset collisions.

On the other hand, depending on the type and location of impact, Advanced Front Air Bags may deploy in crashes with little vehicle front-end damage but that produce a severe initial deceleration.

Because air bag sensors measure vehicle deceleration over time, vehicle speed and damage by themselves are not good indicators of whether or not an air bag should have deployed.

Seat belts are necessary for your protection in all collisions, and also are needed to help keep you in position, away from an inflating air bag.

When the ORC detects a collision requiring the Advanced Front Air Bags, it signals the inflator units. A large quantity of non-toxic gas is generated to inflate the Advanced Front Air Bags.

The steering wheel hub trim cover and the upper right side of the instrument panel separate and fold out of the way as the air bags inflate to their full size. The Advanced Front Air Bags fully inflate in less time than it takes to blink your eyes. The air bags then quickly deflate while helping to restrain the driver and front passenger.

Knee Impact Bolsters

The Knee Impact Bolsters help protect the knees of the driver and front passenger, and position the front occupants for improved interaction with the Advanced Front Air Bags.

WARNING!

- **Do not drill, cut, or tamper with the knee impact bolsters in any way.**
- **Do not mount any accessories to the knee impact bolsters such as alarm lights, stereos, citizen band radios, etc.**

Supplemental Driver Knee Air Bag

This vehicle is equipped with a Supplemental Driver Knee Air Bag mounted in the instrument panel below the steering column. The Supplemental Driver Knee Air Bag provides enhanced protection during a frontal impact by working together with the seat belts, pretensioners, and Advanced Front Air Bags.

Supplemental Side Air Bags

Your vehicle is equipped with two types of side air bags:

1. Supplemental Seat-Mounted Side Air Bags (SABs): Located in the outboard side of the front seats. The SABs are marked with a SRS AIRBAG label sewn into the outboard side of the seats.

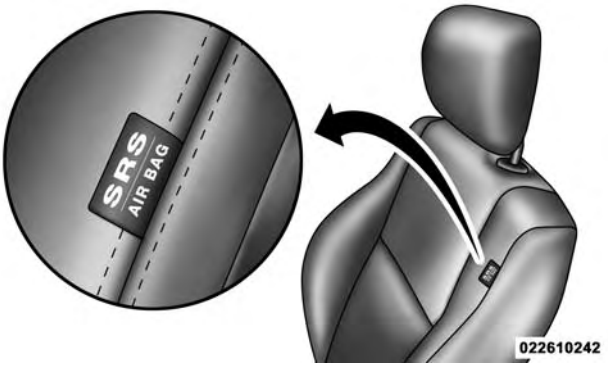

Front Supplemental Seat-Mounted Side Air Bag Label

The SABs may help to reduce the risk of occupant injury during certain side impact and certain rollover events, in addition to the injury reduction potential provided by the seat belts and body structure.

When the SAB deploys, it opens the seam on the outboard side of the seatback's trim cover. The inflating SAB deploys through the seat seam into the space between the occupant and the door. The SAB moves at a very high speed and with such a high force that it could injure you if you are not seated properly, or if items are positioned in the area where the SAB inflates. Children are at an even greater risk of injury from a deploying air bag.

WARNING!

Do not use accessory seat covers or place objects between you and the Side Air Bags; the performance could be adversely affected and/or objects could be pushed into you, causing serious injury.

2. Supplemental Side Air Bag Inflatable Curtains (SABICs): Located above the side windows. The trim covering the SABICs is labeled SRS AIRBAG.

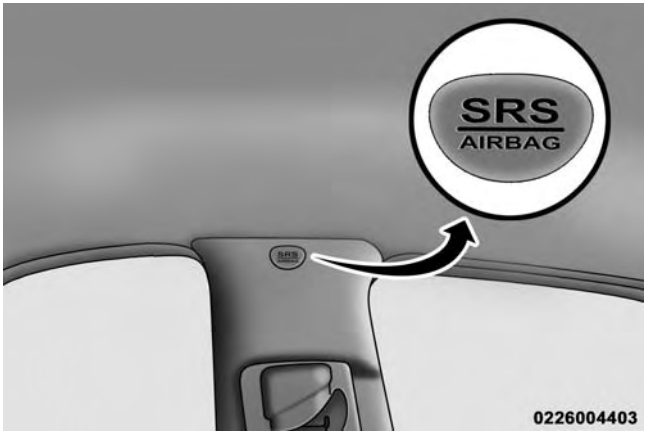

Supplemental Side Air Bag Inflatable Curtain (SABIC) Label Location

SABICs may help reduce the risk of head injury to front and rear seat outboard occupants. SABICs may reduce the risk of injuries in certain side impact and vehicle

rollover events, in addition to the injury reduction potential provided by the seat belts and body structure.

The SABICs deploy downward, covering the side windows. An inflating SABIC pushes the outside edge of the trim out of the way and covers the window. The SABICs inflate with enough force to injure you if you are not belted and seated properly, or if items are positioned in the area where the SABICs inflate. Children are at an even greater risk of injury from a deploying air bag.

The SABICs may help reduce the risk of partial or complete ejection of vehicle occupants through side windows in certain rollover or side impact events.

WARNING!

- **Your vehicle is equipped with left and right Supplemental Side Air Bag Inflatable Curtains (SABICs). Do not stack luggage or other cargo up high enough to block the deployment of the SABICs. The trim covering above the side windows where the SABIC and its deployment path are located should remain free from any obstructions.**
- **Your vehicle is equipped with SABICs. In order for the SABICs to work as intended, do not install any accessory items in your vehicle which could alter the roof. Do not add an aftermarket sunroof to your vehicle. Do not add roof racks that require permanent attachments (bolts or screws) for installation on the vehicle roof. Do not drill into the roof of the vehicle for any reason.**

The SABICs and SABs ("Side Air Bags") are designed to activate in certain side impacts and certain rollover events. The Occupant Restraint Controller ("ORC") determines whether the deployment of the Side Air Bags in a particular side impact or rollover event is appropriate, based on the severity and type of collision. Vehicle damage by itself is not a good indicator of whether or not Side Air Bags should have deployed.

Side Air Bags are a supplement to the seat belt restraint system. Side Air Bags deploy in less time than it takes to blink your eyes. Occupants, including children, who are up against or very close to Side Air Bags can be seriously injured or killed. Occupants, including children, should never lean on or sleep against the door, side windows, or area where the Side Air Bags inflate, even if they are in an infant or child restraint.

Seat belts (and child restraints where appropriate) are necessary for your protection in all collisions. They also help keep you in position, away from inflating Side Air Bags. To get the best protection from the Side Air Bags, occupants must wear their seat belts properly and sit upright with their backs against the seats. Children must be properly restrained in a child restraint or booster seat that is appropriate for the size of the child.

WARNING!

- **Side Air Bags need room to inflate. Do not lean against the door or window. Sit upright in the center of the seat.**
- **Being too close to the Side Air Bags during deployment could cause you to be severely injured or killed.**

(Continued)

WARNING! ***(Continued)***

- **Relying on the Side Air Bags alone could lead to more severe injuries in a collision. The Side Air Bags work with your seat belt to restrain you properly. In some collisions, Side Air Bags won't deploy at all. Always wear your seat belt even though you have Side Air Bags.**

NOTE: Air bag covers may not be obvious in the interior trim, but they will open during air bag deployment.

Side Impacts

In side impacts, the side impact sensors aid the ORC in determining the appropriate response to impact events. The system is calibrated to deploy the Side Air Bags on the impact side of the vehicle during impacts that require Side Air Bag occupant protection. In side impacts, the Side Air Bags deploy independently; a left side impact deploys the left Side Air Bags only and a right side impact deploys the right Side Air Bags only.

The Side Air Bags will not deploy in all side collisions, including some collisions at certain angles, or some side collisions that do not impact the area of the passenger compartment. The Side Air Bags may deploy during angled or offset frontal collisions where the Advanced Front Air Bags deploy.

Rollover Events

Side Air Bags are designed to activate in certain rollover events. The ORC determines whether the deployment of the Side Air Bags in a particular rollover event is appropriate, based on the severity and type of collision. Vehicle damage by itself is not a good indicator of whether or not Side Air Bags should have deployed.

The Side Air Bags will not deploy in all rollover events. The rollover sensing-system determines if a rollover

event may be in progress and whether deployment is appropriate. A slower-developing event may deploy the seat belt pretensioners on both sides of the vehicle. A faster-developing event may deploy the seat belt pretensioners as well as the SABs and SABICs on both sides of the vehicle. The rollover sensing-system may also deploy the seat belt pretensioners, with or without the SABs and SABICs, on both sides of the vehicle if the vehicle experiences a near rollover event.

If A Deployment Occurs

The Advanced Front Air Bags are designed to deflate immediately after deployment.

NOTE: Front and/or side air bags will not deploy in all collisions. This does not mean something is wrong with the air bag system.

If you do have a collision, which deploys the air bags, any or all of the following may occur:

- The air bag material may sometimes cause abrasions and/or skin reddening to the occupants as the air bags deploy and unfold. The abrasions are similar to friction rope burns or those you might get sliding along a carpet or gymnasium floor. They are not caused by contact with chemicals. They are not permanent and normally heal quickly. However, if you haven't healed significantly within a few days, or if you have any blistering, see your doctor immediately.
- As the air bags deflate, you may see some smoke-like particles. The particles are a normal by-product of the process that generates the non-toxic gas used for air bag inflation. These airborne particles may irritate the skin, eyes, nose, or throat. If you have skin or eye irritation, rinse the area with cool water. For nose or throat irritation, move to fresh air. If the irritation continues, see your doctor. If these particles settle on your clothing, follow the garment manufacturer's instructions for cleaning.

Do not drive your vehicle after the air bags have deployed. If you are involved in another collision, the air bags will not be in place to protect you.

WARNING!

Deployed air bags and seat belt pretensioners cannot protect you in another collision. Have the air bags, seat belt pretensioners, and the seat belt retractor assemblies replaced by an authorized dealer immediately. Also, have the Occupant Restraint Controller System serviced as well.

NOTE:

- Air bag covers may not be obvious in the interior trim, but they will open during air bag deployment.
- After any collision, the vehicle should be taken to an authorized dealer immediately.

Enhanced Accident Response System

In the event of an impact, if the communication network remains intact, and the power remains intact, depending on the nature of the event, the ORC will determine whether to have the Enhanced Accident Response System perform the following functions:

- Cut off fuel to the engine.
- Flash hazard lights as long as the battery has power or until the ignition switch is turned to the “OFF” position.
- Turn on the interior lights, which remain on as long as the battery has power or until the ignition switch is turned to the “OFF” position.
- Unlock the doors automatically.

System Reset Procedure

In order to reset the Enhanced Accident Response System functions after an event, the ignition switch must be changed from ignition START or ON/RUN to ignition OFF.

Air Bag Warning Light

The air bags must be ready to inflate for your protection in a collision. The Occupant Restraint Controller (ORC) monitors the internal circuits and interconnecting wiring associated with air bag system electrical components.

The ORC monitors the readiness of the electronic parts of the air bag system whenever the ignition switch is in the START or ON/RUN position. If the ignition switch is in the OFF position or in the ACC position, the air bag system is not on and the air bags will not inflate.

The ORC contains a backup power supply system that may deploy the air bags even if the battery loses power or it becomes disconnected prior to deployment.

The ORC turns on the Air Bag Warning Light in the instrument panel for approximately four to eight seconds for a self-check when the ignition switch is first turned to the ON/RUN position. After the self-check, the Air Bag Warning Light will turn off. If the ORC detects a malfunction in any part of the system, it turns on the Air Bag Warning Light, either momentarily or continuously. A single chime will sound to alert you if the light comes on again after initial startup.

The ORC also includes diagnostics that will illuminate the instrument panel Air Bag Warning Light if a malfunction is detected that could affect the air bag system. The diagnostics also record the nature of the malfunction. While the air bag system is designed to be maintenance

free, if any of the following occurs, have an authorized dealer service the air bag system immediately.

- The Air Bag Warning Light does not come on during the four to eight seconds when the ignition switch is first turned to the ON/RUN position.
- The Air Bag Warning Light remains on after the four to eight-second interval.
- The Air Bag Warning Light comes on intermittently or remains on while driving.

NOTE: If the speedometer, tachometer, or any engine related gauges are not working, the Occupant Restraint Controller (ORC) may also be disabled. In this condition the air bags may not be ready to inflate for your protection. Have an authorized dealer service the air bag system immediately.

WARNING!

Ignoring the Air Bag Warning Light in your instrument panel could mean you won't have the air bags to protect you in a collision. If the light does not come on as a bulb check when the ignition is first turned on, stays on after you start the vehicle, or if it comes on as you drive, have an authorized dealer service the air bag system immediately.

Maintaining Your Air Bag System

WARNING!

- **Modifications to any part of the air bag system could cause it to fail when you need it. You could be injured if the air bag system is not there to protect you. Do not modify the components or wiring, including adding any kind of badges or stickers to the steering wheel hub trim cover or the upper right side of the instrument panel. Do not modify the front bumper, vehicle body structure, or add aftermarket side steps or running boards.**
- **It is dangerous to try to repair any part of the air bag system yourself. Be sure to tell anyone who works on your vehicle that it has an air bag system.**

(Continued)

WARNING! ***(Continued)***

- **Do not attempt to modify any part of your air bag system. The air bag may inflate accidentally or may not function properly if modifications are made. Take your vehicle to an authorized dealer for any air bag system service. If your seat, including your trim cover and cushion, needs to be serviced in any way (including removal or loosening/tightening of seat attachment bolts), take the vehicle to your authorized dealer. Only manufacturer approved seat accessories may be used. If it is necessary to modify the air bag system for persons with disabilities, contact your authorized dealer.**

Event Data Recorder (EDR)

This vehicle is equipped with an event data recorder (EDR). The main purpose of an EDR is to record, in certain crash or near crash-like situations, such as an air

bag deployment or hitting a road obstacle, data that will assist in understanding how a vehicle's systems performed. The EDR is designed to record data related to vehicle dynamics and safety systems for a short period of time, typically 30 seconds or less. The EDR in this vehicle is designed to record such data as:

- How various systems in your vehicle were operating;
- Whether or not the driver and passenger safety belts were buckled/fastened;
- How far (if at all) the driver was pushing the accelerator and/or brake pedal; and,
- How fast the vehicle was traveling.

These data can help provide a better understanding of the circumstances in which crashes and injuries occur.

NOTE: EDR data are recorded by your vehicle only if a non-trivial crash situation occurs; no data are recorded by the EDR under normal driving conditions and no personal data (e.g., name, gender, age, and crash location) are recorded. However, other parties, such as law enforcement, could combine the EDR data with the type of personally identifying data routinely acquired during a crash investigation.

To read data recorded by an EDR, special equipment is required, and access to the vehicle or the EDR is needed. In addition to the vehicle manufacturer, other parties, such as law enforcement, that have the special equipment, can read the information if they have access to the vehicle or the EDR.

Child Restraints

Everyone in your vehicle needs to be buckled up at all times, including babies and children.

Every state in the United States, and every Canadian province, requires that small children ride in proper restraint systems. This is the law, and you can be prosecuted for ignoring it.

Children 12 years or younger should ride properly buckled up in a rear seat, if available. According to crash statistics, children are safer when properly restrained in the rear seats rather than in the front.

WARNING!

In a collision, an unrestrained child can become a projectile inside the vehicle. The force required to hold even an infant on your lap could become so great that you could not hold the child, no matter how strong you are. The child and others could be badly injured. Any child riding in your vehicle should be in a proper restraint for the child's size.

There are different sizes and types of restraints for children from newborn size to the child almost large enough for an adult seat belt. Always check the child seat Owner's Manual to make sure you have the correct seat for your child. Carefully read and follow all the instructions and warnings in the child restraint Owner's Manual and on all the labels attached to the child restraint.

Before buying any restraint system, make sure that it has a label certifying that it meets all applicable Safety Standards. You should also make sure that you can install it in the vehicle where you will use it.

NOTE:

- For additional information, refer to www.seatcheck.org or call 1–866–SEATCHECK (732–8243). Canadian residents should refer to Transport Canada's website for additional information:
- www.tc.gc.ca/eng/roadsafety/safedrivers-childsafety-index-53.htm

Summary Of Recommendations For Restraining Children In Vehicles

	Child Size, Height, Weight Or Age	Recommended Type Of Child Restraint
Infants and Toddlers	Children who are two years old or younger and who have not reached the height or weight limits of their child restraint	Either an Infant Carrier or a Convertible Child Restraint, facing rearward in the rear seat of the vehicle
Small Children	Children who are at least two years old or who have out-grown the height or weight limit of their rear-facing child restraint	Forward-Facing Child Restraint with a five-point Harness, facing forward in the rear seat of the vehicle
Larger Children	Children who have out-grown their forward-facing child restraint, but are too small to properly fit the vehicle's seat belt	Belt Positioning Booster Seat and the vehicle seat belt, seated in the rear seat of the vehicle
Children Too Large for Child Restraints	Children 12 years old or younger, who have out-grown the height or weight limit of their booster seat	Vehicle Seat Belt, seated in the rear seat of the vehicle

Infants And Child Restraints

Safety experts recommend that children ride rear-facing in the vehicle until they are two years old or until they reach either the height or weight limit of their rear-facing child restraint. Two types of child restraints can be used rear-facing: infant carriers and convertible child seats.

The infant carrier is only used rear-facing in the vehicle. It is recommended for children from birth until they reach the weight or height limit of the infant carrier. Convertible child seats can be used either rear-facing or forward-facing in the vehicle. Convertible child seats often have a higher weight limit in the rear-facing direction than infant carriers do, so they can be used rear-facing by children who have outgrown their infant carrier but are still less than at least two years old. Children should remain rear-facing until they reach the highest weight or height allowed by their convertible child seat.

WARNING!

- **Never place a rear-facing child restraint in front of an air bag. A deploying passenger Advanced Front Air Bag can cause death or serious injury to a child 12 years or younger, including a child in a rear-facing child restraint.**
- **Only use a rear-facing child restraint in a vehicle with a rear seat.**

Older Children And Child Restraints

Children who are two years old or who have outgrown their rear-facing convertible child seat can ride forward-facing in the vehicle. Forward-facing child seats and convertible child seats used in the forward-facing direction are for children who are over two years old or who have outgrown the rear-facing weight or height limit of their rear-facing convertible child seat. Children should

remain in a forward-facing child seat with a harness for as long as possible, up to the highest weight or height allowed by the child seat.

All children whose weight or height is above the forward-facing limit for the child seat should use a belt-positioning booster seat until the vehicle's seat belts fit properly. If the child cannot sit with knees bent over the vehicle's seat cushion while the child's back is against the seatback, they should use a belt-positioning booster seat. The child and belt-positioning booster seat are held in the vehicle by the seat belt.

WARNING!

- **Improper installation can lead to failure of an infant or child restraint. It could come loose in a collision. The child could be badly injured or killed. Follow the child restraint manufacturer's**

(Continued)

WARNING! ***(Continued)***

directions exactly when installing an infant or child restraint.

- **After a child restraint is installed in the vehicle, do not move the vehicle seat forward or rearward because it can loosen the child restraint attachments. Remove the child restraint before adjusting the vehicle seat position. When the vehicle seat has been adjusted, reinstall the child restraint.**
- **When your child restraint is not in use, secure it in the vehicle with the seat belt or LATCH anchorages, or remove it from the vehicle. Do not leave it loose in the vehicle. In a sudden stop or accident, it could strike the occupants or seatbacks and cause serious personal injury.**

Integrated Child Booster Seat — If Equipped

The Integrated Child Booster Seat is located in each outboard second-row passenger seat. The Booster Seat is designed for children weighing between 48 and 85 lbs (22 and 39 kg) and between 47 in (119 cm) and 57 in (145 cm) tall.

To position a child into the Integrated Child Booster Seat follow these steps:

1. Slide the second row seat to the full rear position to use the Integrated Child Booster Seat.

NOTE: The second row bench with Integrated Child Booster Seat must remain in the full rear position during use.

2. Pull the release loop forward to release the latch and seat cushion.

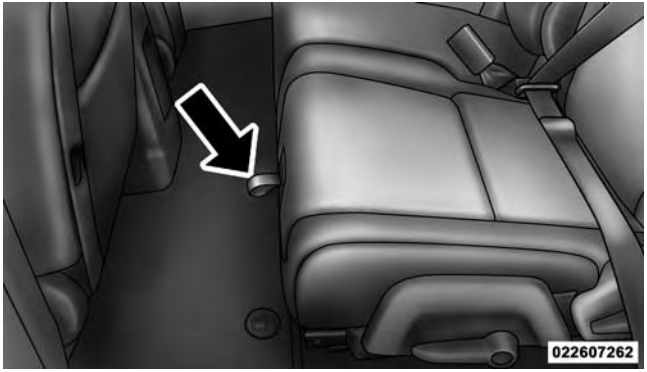

Release Loop

3. Lift the seat cushion up and push back to lock it in the booster seat position.

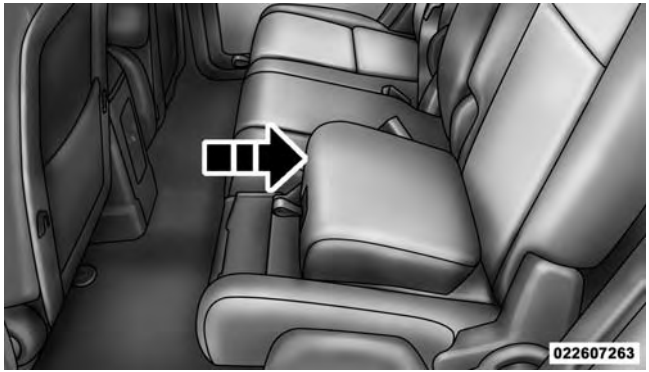

Booster Seat

4. Place the child upright in the seat with their back firmly against the seatback.
5. Grasp the latch plate and pull out the seat belt.
6. Slide the latch plate up the webbing as far as necessary to allow the seat belt to go around the child's lap.

NOTE: The lap portion of the seat belt should be low on the hips and as snug as possible.

7. Once the seat belt is long enough to fit properly, insert the latch plate into the buckle until you hear a "click."

Proper Belt Use

8. To remove the slack from the lap belt, pull upward on the shoulder portion of the seat belt.

9. To release the seat belt, push the red button on the buckle.

WARNING!

Securely lock the seat cushion into position before using the seat. Otherwise, the seat will not provide the proper stability for child seats and/or passengers. An improperly latched seat cushion could cause serious injury.

Children Too Large For Booster Seats

Children who are large enough to wear the shoulder belt comfortably, and whose legs are long enough to bend over the front of the seat when their back is against the seatback, should use the seat belt in a rear seat. Use this simple 5-step test to decide whether the child can use the vehicle's seat belt alone:

1. Can the child sit all the way back against the back of the vehicle seat?

2. Do the child's knees bend comfortably over the front of the vehicle seat – while they are still sitting all the way back?
3. Does the shoulder belt cross the child's shoulder between their neck and arm?
4. Is the lap part of the seat belt as low as possible, touching the child's thighs and not their stomach?
5. Can the child stay seated like this for the whole trip?

If the answer to any of these questions was "no," then the child still needs to use a booster seat in this vehicle. If the child is using the lap/shoulder belt, check seat belt fit periodically and make sure the seat belt buckle is latched. A child's squirming or slouching can move the seat belt out of position. If the shoulder belt contacts the face or neck, move the child closer to the center of the vehicle, or use a booster seat to position the seat belt on the child correctly.

WARNING!

Never allow a child to put the shoulder belt under an arm or behind their back. In a crash, the shoulder belt will not protect a child properly, which may result in serious injury or death. A child must always wear both the lap and shoulder portions of the seat belt correctly.

Recommendations For Attaching Child Restraints

Restraint Type	Combined Weight of the Child + Child Restraint	Use any attachment method shown with an "X" Below			
		LATCH – Lower Anchors Only	Seat Belt Only	LATCH – Lower Anchors + Top Tether Anchor	Seat Belt + Top Tether Anchor
Rear-Facing Child Restraint	Up to 65 lbs (29.5 kg)	X	X		
Rear-Facing Child Restraint	More than 65 lbs (29.5 kg)		X		
Forward-Facing Child Restraint	Up to 65 lbs (29.5 kg)			X	X
Forward-Facing Child Restraint	More than 65 lbs (29.5 kg)				X

Lower Anchors And Tethers For Children (LATCH) Restraint System

022668173

Your vehicle is equipped with the child restraint anchorage system called LATCH, which stands for Lower Anchors and Tethers for CHildren. The LATCH system has three vehicle anchor points for installing LATCH-equipped child seats. There are two lower anchorages located at the back of the seat cushion where it meets the seatback and one top tether anchorage located behind the seating position. These anchorages are used to install LATCH-equipped child seats without using the vehicle's seat belts. Some seating positions may have a top tether anchorage but no lower anchorages. In these seating positions, the seat belt must be used with the top tether anchorage to install the child restraint. Please see the following table for more information.

LATCH Positions For Installing Child Restraints In This Vehicle

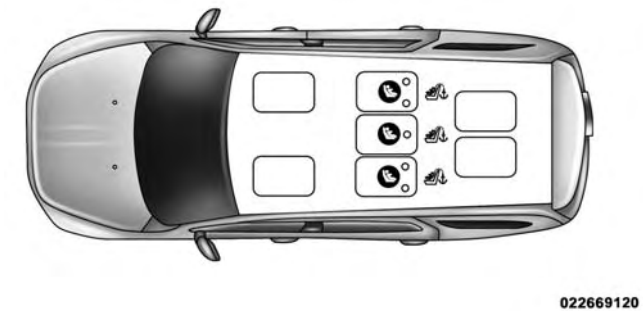

Lower Anchor / Top Tether Locations (Third Row Shown – If Equipped)

- Lower Anchorage Symbol 2 anchorages per seating position
- Top Tether Anchorage Symbol

Child Restraint LATCH Positions

What is the weight limit (child's weight + weight of the child restraint) for using the LATCH anchorage system to attach the child restraint?	65 lbs (29.5 kg)	Use the LATCH anchorage system until the combined weight of the child and the child restraint is 65 lbs (29.5 kg). Use the seat belt and tether anchor instead of the LATCH system once the combined weight is more than 65 lbs (29.5 kg).
Can the LATCH anchorages and the seat belt be used together to attach a rear-facing or forward-facing child restraint?	No	Do not use the seat belt when you use the LATCH anchorage system to attach a rear-facing or forward-facing child restraint.

Can two child restraints be attached using a common lower LATCH anchorage?	No	Never “share” a LATCH anchorage with two or more child restraints. If the center position does not have dedicated LATCH lower anchorages, use the seat belt to install a child seat in the center position next to a child seat using the LATCH anchorages in an outboard position.
Can the rear-facing child restraint touch the back of the front passenger seat?	Yes	The child seat may touch the back of the front passenger seat if the child restraint manufacturer also allows contact. See your child restraint owner’s manual for more information.
Can the head restraints be removed?	Yes	Second row outboard positions only, third row all positions.

Locating The LATCH Anchorages

The lower anchorages are round bars that are found at the rear of the seat cushion where it meets the seatback. They are just visible when you lean into the rear seat to install the child restraint. You will easily feel them if you run your finger along the gap between the seatback and seat cushion.

Rear Seat Lower Anchorages

Locating The Tether Anchorages

There are tether strap anchors located behind each second row rear seatback, near the floor.

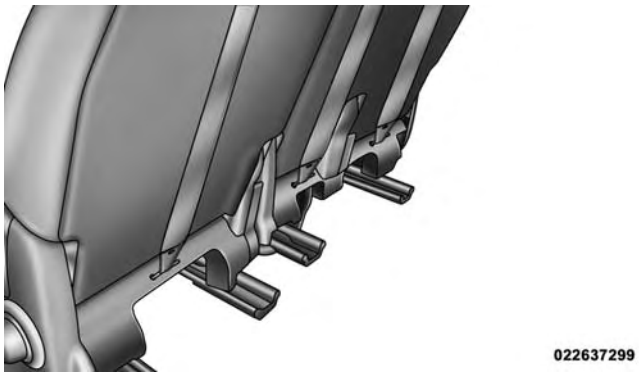

LATCH Anchorages
(Third Row 60/40 Anchorage Shown)

LATCH-compatible child restraint systems will be equipped with a rigid bar or a flexible strap on each side. Each will have a hook or connector to attach to the lower anchorage and a way to tighten the connection to the anchorage. Forward-facing child restraints and some rear-facing child restraints will also be equipped with a tether strap. The tether strap will have a hook at the end to attach to the top tether anchorage and a way to tighten the strap after it is attached to the anchorage.

Center Seat LATCH

This vehicle has 5 lower LATCH anchorages in the rear seat. Anchorages A and B are used for the right outboard position behind the front passenger (1). Anchorages D and E are used for the left outboard position behind the driver (3). Anchorages B and C are used for the center seating position (2). Do not install a LATCH-compatible child restraint using anchorages C and D. This is not a LATCH-compatible position in your vehicle.

You can install up to two child seats using the LATCH system at the same time. If you are installing three child restraints, you must use the seatbelt to install the center child restraint. You can use either the LATCH anchors for positions (1) and (3) or the vehicle's seat belt for installing the child seats in the outboard positions.

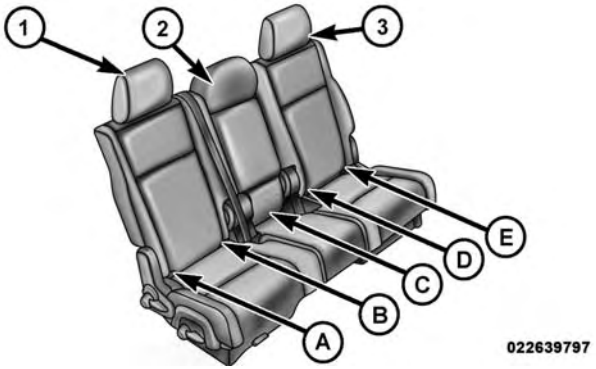

Options for installing two child seats using the LATCH anchorages in this vehicle:

1. Right and left outboard seating positions (1 and 3): Install the child seats in the right and left outboard seating positions using lower anchorages A and B, and D and E. Do not use the center seat anchorage, C. If the child seats do not block the center seat belt webbing and buckle, the center seat belt can be used to restraint an occupant or child restraint in the center seating position.

2. Left outboard and center seating positions (3 and 2): Install the first child seat in the left outboard seating position using lower anchorages D and E. Install the second child seat using the center anchorages, B and C. Do not use the outer anchorage closest to the opposite door, A. Do not use the remaining right outboard seating position (1) for any occupant. The

center child restraint will block the seat belt buckle for this position.

WARNING!

- **Use anchorages B and C to install a LATCH-compatible child restraint in the center seating position (2). Do not install a LATCH-compatible child restraint using anchorages C and D. This is not a LATCH-compatible position in your vehicle.**
- **A child restraint installed in the center position (2) will block the seat belt buckle for the empty right outboard seating position (1). Do not use this seat for another occupant.**
- **Never use the same lower anchorage to attach more than one child restraint.**

(Continued)

WARNING! ***(Continued)***

- **If you are installing three child restraints next to each other, you must use the seat belt and the center tether anchor for the center position. You can then use either the LATCH anchors or the vehicle's seat belt for installing the child seats in the outboard positions. Please refer to "Installing the LATCH-Compatible Child Restraint System" for typical installation instructions.**

Always follow the directions of the child restraint manufacturer when installing your child restraint. Not all child restraint systems will be installed as described here.

To Install A LATCH-Compatible Child Restraint

1. If the selected seating position has a Switchable Automatic Locking Retractor (ALR) seat belt, stow the seat belt following the instructions below. See the section

"Installing Child Restraints Using the Vehicle Seat Belt" to check what type of seat belt each seating position has.

2. Loosen the adjusters on the lower straps and on the tether strap of the child seat so that you can more easily attach the hooks or connectors to the vehicle anchorages.

3. Place the child seat between the lower anchorages for that seating position. For some second row seats, you may need to recline the seat and/or raise the head restraint to get a better fit. If the rear seat can be moved forward and rearward in the vehicle, you may wish to move it to its rear-most position to make room for the child seat. You may also move the front seat forward to allow more room for the child seat.

4. Attach the lower hooks or connectors of the child restraint to the lower anchorages in the selected seating position.

5. If the child restraint has a tether strap, connect it to the top tether anchorage. See the section "Installing Child Restraints Using the Top Tether Anchorage" for directions to attach a tether anchor.

6. Tighten all of the straps as you push the child restraint rearward and downward into the seat. Remove slack in the straps according to the child restraint manufacturer's instructions.

7. Test that the child restraint is installed tightly by pulling back and forth on the child seat at the belt path. It should not move more than 1 inch (25.4 mm) in any direction.

How To Stow An Unused ALR Seatbelt:

When using the LATCH attaching system to install a child restraint, stow all ALR seat belts that are not being used by other occupants or being used to secure child restraints. An unused belt could injure a child if they play

with it and accidentally lock the seatbelt retractor. Before installing a child restraint using the LATCH system, buckle the seat belt behind the child restraint and out of the child's reach. If the buckled seat belt interferes with the child restraint installation, instead of buckling it behind the child restraint, route the seat belt through the child restraint belt path and then buckle it. Do not lock the seatbelt. Remind all children in the vehicle that the seat belts are not toys and that they should not play with them.

WARNING!

- **Improper installation of a child restraint to the LATCH anchorages can lead to failure of the restraint. The child could be badly injured or killed. Follow the child restraint manufacturer's directions exactly when installing an infant or child restraint.**

(Continued)

WARNING! *(Continued)*

- **Child restraint anchorages are designed to withstand only those loads imposed by correctly-fitted child restraints. Under no circumstances are they to be used for adult seat belts, harnesses, or for attaching other items or equipment to the vehicle.**

Installing Child Restraints Using The Vehicle Seat Belt

The seat belts in the passenger seating positions are equipped with either a Switchable Automatic Locking Retractor (ALR) or a cinching latch plate or both. Both types of seat belts are designed to keep the lap portion of the seat belt tight around the child restraint so that it is not necessary to use a locking clip. The ALR retractor can be "switched" into a locked mode by pulling all of the webbing out of the retractor and then letting the webbing retract back into the retractor. If it is locked, the ALR will

make a clicking noise while the webbing is pulled back into the retractor. For additional information on ALR, refer to the "Automatic Locking Mode" description under "Occupant Restraints." The cinching latch plate is designed to hold the lap portion of the seatbelt tight when webbing is pulled tight and straight through a child restraint's belt path.

Please see the table below and the following sections for more information.

Lap/Shoulder Belt Systems For Installing Child Restraints In This Vehicle

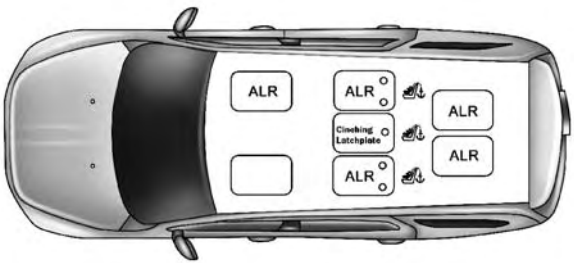

022669121

Third Row Shown – If Equipped

- ALR - Switchable Automatic Locking Retractor
- CINCH = Cinching Latchplate

What is the weight limit (child's weight + weight of the child restraint) for using the Tether Anchor with the seat belt to attach a forward facing child restraint?	Weight limit of the Child Restraint	Always use the tether anchor when using the seat belt to install a forward facing child restraint, up to the recommended weight limit of the child restraint.
Can the rear-facing child restraint touch the back of the front passenger seat?	Yes	Contact between the front passenger seat and the child restraint is allowed, if the child restraint manufacturer also allows contact.
Can the head restraints be removed?	Yes	The 2nd row and 3rd row center head restraints may be removed.
Can the buckle stalk be twisted to tighten the seat belt against the seat belt path of the child restraint?	Yes	In positions with cinching latch plates (CINCH), the buckle stalk may be twisted up to 3 full turns. Do not twist the buckle stalk in a seating position with an ALR retractor.

Installing A Child Restraint With A Switchable Automatic Locking Retractor (ALR)

1. Place the child seat in the center of the seating position. For some second row seats, you may need to recline the seat and/or raise the head restraint to get a better fit. If the rear seat can be moved forward and rearward in the vehicle, you may wish to move it to its rear-most position to make room for the child seat. You may also move the front seat forward to allow more room for the child seat.
2. Pull enough of the seat belt webbing from the retractor to pass it through the seat belt path of the child restraint. Do not twist the belt webbing in the seat belt path.
3. Slide the latch plate into the buckle until you hear a "click".
4. Pull on the webbing to make the lap portion tight against the child seat.
5. To lock the seat belt, pull down on the shoulder part of the seat belt until you have pulled all the seat belt webbing out of the retractor. Then, allow the webbing to retract back into the retractor. As the webbing retracts, you will hear a clicking sound. This means the seat belt is now in the Automatic Locking mode.
6. Try to pull the webbing out of the retractor. If it is locked, you should not be able to pull out any webbing. If the retractor is not locked, repeat step 5.
7. Finally, pull up on any excess webbing to tighten the lap portion around the child restraint while you push the child restraint rearward and downward into the vehicle seat.
8. If the child restraint has a top tether strap and the seating position has a top tether anchorage, connect

the tether strap to the anchorage and tighten the tether strap. See the section "Installing Child Restraints Using the Top Tether Anchorage" for directions to attach a tether anchor.

9. Test that the child restraint is installed tightly by pulling back and forth on the child seat at the seat belt path. It should not move more than 1 inch (25.4 mm) in any direction.

Any seat belt system will loosen with time, so check the seat belt occasionally, and pull it tight if necessary.

Installing A Child Restraint With A Cinching Latch Plate (CINCH) — If Equipped

1. Place the child seat in the center of the seating position. For some second row seats, you may need to recline the seat and / or raise the head restraint to get a better fit. If the rear seat can be moved forward and rearward in the vehicle, you may wish to move it to its rear-most position to make room for the child seat. You may also move the front seat forward to allow more room for the child seat.
2. Next, pull enough of the seat belt webbing from the retractor to pass it through the belt path of the child restraint. Do not twist the belt webbing in the belt path.
3. Slide the latch plate into the buckle until you hear a "click."
4. Finally, pull up on any excess webbing to tighten the lap portion around the child restraint while you push the child restraint rearward and downward into the vehicle seat.
5. If the child restraint has a top tether strap and the seating position has a top tether anchorage, connect the tether strap to the anchorage and tighten the tether

strap. See the section "Installing Child Restraints Using the Top Tether Anchorage" for directions to attach a tether anchor.

6. Test that the child restraint is installed tightly by pulling back and forth on the child seat at the belt path. It should not move more than 1 inch (25.4 mm) in any direction.

Any seat belt system will loosen with time, so check the belt occasionally, and pull it tight if necessary.

If the buckle or the cinching latch plate is too close to the belt path opening of the child restraint, you may have trouble tightening the seat belt. If this happens, disconnect the latch plate from the buckle and twist the short buckle-end belt up to three full turns to shorten it. Insert the latch plate into the buckle with the release button facing out, away from the child restraint. Repeat steps 4 to 6, above, to complete the installation of the child restraint.

If the belt still cannot be tightened after you shorten the buckle, disconnect the latch plate from the buckle, turn the buckle around one half turn, and insert the latch plate into the buckle again. If you still cannot make the child restraint installation tight, try a different seating position.

Installing Child Restraints Using The Top Tether Anchorage

1. Look behind the seating position where you plan to install the child restraint to find the tether anchorage. You may need to move the seat forward to provide better access to the tether anchorage. If there is no top tether anchorage for that seating position, move the child restraint to another position in the vehicle if one is available.

Seat Track Release Lever

2. Route the tether strap to provide the most direct path for the strap between the anchor and the child seat. If your vehicle is equipped with adjustable rear head restraints, raise the head restraint, and where possible, route the tether strap under the head restraint and between the two posts. If not possible, lower the head restraint and pass the tether strap around the outboard side of the head restraint.
3. Attach the tether strap hook of the child restraint to the top tether anchorage as shown in the diagram.

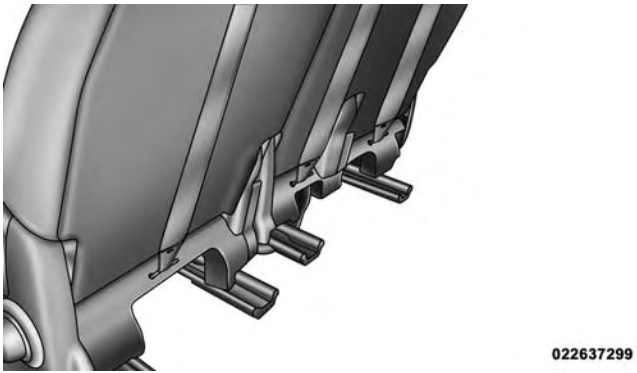

Rear Seat Tether Strap Mounting

4. Remove slack in the tether strap according to the child restraint manufacturer's instructions.

WARNING!

- **An incorrectly anchored tether strap could lead to increased head motion and possible injury to the child. Use only the anchorage position directly behind the child seat to secure a child restraint top tether strap.**
- **If your vehicle is equipped with a split rear seat, make sure the tether strap does not slip into the opening between the seatbacks as you remove slack in the strap.**

Transporting Pets

Air Bags deploying in the front seat could harm your pet. An unrestrained pet will be thrown about and possibly injured, or injure a passenger during panic braking or in a collision.

Pets should be restrained in the rear seat in pet harnesses or pet carriers that are secured by seat belts.

ENGINE BREAK-IN RECOMMENDATIONS

A long break-in period is not required for the engine and drivetrain (transmission and axle) in your vehicle.

Drive moderately during the first 300 mi (500 km). After the initial 60 mi (100 km), speeds up to 50 or 55 mph (80 or 90 km/h) are desirable.

While cruising, brief full-throttle acceleration, within the limits of local traffic laws contributes to a good break-in. Wide-open throttle acceleration in low gear can be detrimental and should be avoided.

The engine oil installed in the engine at the factory is a high-quality energy-conserving type lubricant. Oil changes should be consistent with anticipated climate conditions under which vehicle operations will occur. For the recommended viscosity and quality grades, refer to "Maintenance Procedures" in "Maintaining Your Vehicle". NON-DETERGENT OR STRAIGHT MINERAL OILS MUST NEVER BE USED.

A new engine may consume some oil during its first few thousand miles (kilometers) of operation. This should be considered a normal part of the break-in and not interpreted as an indication of difficulty.

SAFETY TIPS

Transporting Passengers

NEVER TRANSPORT PASSENGERS IN THE CARGO AREA.

WARNING!

- **Do not leave children or animals inside parked vehicles in hot weather. Interior heat build-up may cause serious injury or death.**
- **It is extremely dangerous to ride in a cargo area, inside or outside of a vehicle. In a collision, people riding in these areas are more likely to be seriously injured or killed.**
- **Do not allow people to ride in any area of your vehicle that is not equipped with seats and seat belts.**

(Continued)

WARNING! *(Continued)*

- **Be sure everyone in your vehicle is in a seat and using a seat belt properly.**
- **On seven passenger models, do not drive the vehicle with the second row passenger seat in the easy entry/exit position (seat cushion flipped upward and seat moved forward), as this position is only intended for entering and exiting the third row seats. Failure to follow this warning may result in personal injury.**
- **On seven passenger models, do not allow a passenger to sit in a third row seat with the second row seatback(s) folded flat. In a collision, the passenger could slide underneath the seat belt and be seriously or even fatally injured.**

Exhaust Gas

WARNING!

Exhaust gases can injure or kill. They contain carbon monoxide (CO), which is colorless and odorless. Breathing it can make you unconscious and can eventually poison you. To avoid breathing (CO), follow these safety tips:

- **Do not run the engine in a closed garage or in confined areas any longer than needed to move your vehicle in or out of the area.**
- **If you are required to drive with the trunk/liftgate/rear doors open, make sure that all windows are closed and the climate control BLOWER switch is set at high speed. DO NOT use the recirculation mode.**

(Continued)

WARNING! *(Continued)*

- **If it is necessary to sit in a parked vehicle with the engine running, adjust your heating or cooling controls to force outside air into the vehicle. Set the blower at high speed.**

The best protection against carbon monoxide entry into the vehicle body is a properly maintained engine exhaust system.

Whenever a change is noticed in the sound of the exhaust system, when exhaust fumes can be detected inside the vehicle, or when the underside or rear of the vehicle is damaged, have a competent mechanic inspect the complete exhaust system and adjacent body areas for broken, damaged, deteriorated, or mispositioned parts. Open seams or loose connections could permit exhaust fumes to seep into the passenger compartment. In addition, inspect the exhaust system each time the vehicle is raised for lubrication or oil change. Replace as required.

Safety Checks You Should Make Inside The Vehicle

Seat Belts

Inspect the seat belt system periodically, checking for cuts, frays, and loose parts. Damaged parts must be replaced immediately. Do not disassemble or modify the system.

Front seat belt assemblies must be replaced after a collision. Rear seat belt assemblies must be replaced after a collision if they have been damaged (i.e., bent retractor, torn webbing, etc.). If there is any question regarding belt or retractor condition, replace the seat belt.

Air Bag Warning Light

The light should turn on and remain on for four to six seconds as a bulb check when the ignition switch is first turned ON. If the light is

not lit during starting, or if the light stays on, flickers, or turns on while driving, have the system checked by an authorized dealer.

Defroster

Check operation by selecting the defrost mode and place the blower control on high speed. You should be able to feel the air directed against the windshield. See your authorized dealer for service if your defroster is inoperable.

Floor Mat Safety Information

Always use floor mats designed to fit the footwell of your vehicle. Use only floor mats that leave the pedal area unobstructed and that are firmly secured so that they cannot slip out of position and interfere with the pedals or impair safe operation of your vehicle in other ways.

WARNING!

Pedals that cannot move freely can cause loss of vehicle control and increase the risk of serious personal injury.

- **Always make sure that floor mats are properly attached to the floor mat fasteners.**
- **Never place or install floor mats or other floor coverings in the vehicle that cannot be properly secured to prevent them from moving and interfering with the pedals or the ability to control the vehicle.**
- **Never put floor mats or other floor coverings on top of already installed floor mats. Additional floor mats and other coverings will reduce the size of the pedal area and interfere with the pedals.**

(Continued)

WARNING! *(Continued)*

- **Check mounting of mats on a regular basis. Always properly reinstall and secure floor mats that have been removed for cleaning.**
- **Always make sure that objects cannot fall into the driver footwell while the vehicle is moving. Objects can become trapped under the brake pedal and accelerator pedal causing a loss of vehicle control.**
- **If required, mounting posts must be properly installed, if not equipped from the factory.**

Failure to properly follow floor mat installation or mounting can cause interference with the brake pedal and accelerator pedal operation causing loss of control of the vehicle.

Periodic Safety Checks You Should Make Outside The Vehicle

Tires

Examine tires for excessive tread wear and uneven wear patterns. Check for stones, nails, glass, or other objects lodged in the tread or sidewall. Inspect the tread for cuts and cracks. Inspect sidewalls for cuts, cracks and bulges. Check the wheel nuts for tightness. Check the tires (including spare) for proper cold inflation pressure.

Lights

Have someone observe the operation of brake lights and exterior lights while you work the controls. Check turn signal and high beam indicator lights on the instrument panel.

Door Latches

Check for positive closing, latching, and locking.

Fluid Leaks

Check area under vehicle after overnight parking for fuel, engine coolant, oil, or other fluid leaks. Also, if gasoline fumes are detected or if fuel, power steering fluid (if equipped), or brake fluid leaks are suspected, the cause should be located and corrected immediately.

UNDERSTANDING THE FEATURES OF YOUR VEHICLE

CONTENTS

■ MIRRORS 115

- □ Inside Day/Night Mirror — If Equipped 115
- □ Automatic Dimming Mirror — If Equipped . . .116
- □ Outside Mirrors 116
- □ Power Mirrors 117
- □ Power Folding Mirrors — If Equipped. 118
- □ Manual Folding Mirrors — If Equipped 119
- □ Heated Mirrors — If Equipped 119
- □ Illuminated Vanity Mirrors — If Equipped . . .120

■ Uconnect® PHONE (4.3) 120

- □ Uconnect® 4.3 120
- □ Operation 123
- □ Phone Call Features 130
- □ Uconnect® Phone Features 135
- □ Advanced Phone Connectivity 140
- □ Things You Should Know About Your Uconnect® Phone 140
- □ General Information 145

■ Uconnect® PHONE (8.4/8.4N) 146
- □ Uconnect® 8.4/8.4Nav 146
- □ Operation 149
- □ Phone Call Features 161
- □ Uconnect® Phone Features 165
- □ Advanced Phone Connectivity 170
- □ Things You Should Know About Your Uconnect® Phone 171
- □ General Information 183

■ VOICE COMMAND 183
- □ Uconnect® 8.4/8.4 Nav 183
- □ Uconnect® Voice Commands 186

■ SEATS 197
- □ Driver's Power Seat — If Equipped 198
- □ Power Lumbar — If Equipped 200
- □ Front Heated Seats — If Equipped 201
- □ Manual Front Seat Adjustments 202
- □ Recliner Adjustment 203
- □ Driver's Seat Height Adjustment — If Equipped 204
- □ Fold-Flat Front Passenger Seat — If Equipped 205
- □ Head Restraints 206
- □ Third Row Passenger Seats — Seven Passenger Models 211
- □ 60/40 Split Second-Row Passenger Seats 211

- 50/50 Split Third-Row Passenger Seats With Fold-Flat Feature — Seven Passenger Models . .218

■ TO OPEN AND CLOSE THE HOOD 220

■ LIGHTS 222

- Headlight Switch 222
- Automatic Headlights — If Equipped 223
- Headlights On With Wipers (Available With Automatic Headlights Only) 223
- Headlight Time Delay 224
- Daytime Running Lights (DRL) — If Equipped 224
- Lights-On Reminder 225
- Fog Lights — If Equipped 225
- Multifunction Lever 226
- Turn Signals 226
- Lane Change Assist 227
- High/Low Beam Switch 227
- Flash-To-Pass 227
- Interior Lights 227
- Map/Reading Lights 229

■ WINDSHIELD WIPERS AND WASHERS 229

- Intermittent Wiper System 230
- Windshield Wiper Operation 231
- Windshield Washers 232
- Mist Feature 233
- Headlights On With Wipers (Available With Automatic Headlights Only) 233

■ TILT/TELESCOPING STEERING COLUMN . . .234
■ HEATED STEERING WHEEL — IF EQUIPPED 235
■ ELECTRONIC SPEED CONTROL — IF EQUIPPED 236
□ To Activate 237
□ To Set A Desired Speed 237
□ To Deactivate 238
□ To Resume Speed 238
□ To Vary The Speed Setting 238
□ To Accelerate For Passing 239
■ PARKSENSE® REAR PARK ASSIST — IF EQUIPPED 240
□ ParkSense® Sensors 240
□ ParkSense® Warning Display 241
□ ParkSense® Display 241
□ Enabling And Disabling ParkSense® 244
□ Service The ParkSense® Rear Park Assist System 245
□ Cleaning The ParkSense® System 245
□ ParkSense® System Usage Precautions. 246
■ PARKVIEW® REAR BACK UP CAMERA — IF EQUIPPED 248
■ OVERHEAD CONSOLE 250
□ Courtesy/Reading Lights 251
□ Sunglasses Storage 252
□ Interior Observation Mirror 252
□ Power Sunroof Switch — If Equipped 253

■ GARAGE DOOR OPENER — IF EQUIPPED . . .253
□ Before You Begin Programming HomeLink® . .255
□ Programming A Rolling Code 256
□ Programming A Non-Rolling Code 258
□ Canadian/Gate Operator Programming 259
□ Using HomeLink® 261
□ Security 261
□ Troubleshooting Tips 261
□ General Information. 262
■ POWER SUNROOF — IF EQUIPPED 263
□ Opening Sunroof — Express 264
□ Opening Sunroof — Manual Mode 264
□ Closing Sunroof — Express. 265
□ Closing Sunroof — Manual Mode 265
□ Pinch Protect Feature 265
□ Venting Sunroof — Express 265
□ Sunshade Operation. 266
□ Wind Buffeting 266
□ Sunroof Maintenance 266
□ Ignition Off Operation 266
■ ELECTRICAL POWER OUTLETS 266
■ POWER INVERTER — IF EQUIPPED 271
□ Power Inverter Operation. 272
■ CUPHOLDERS 273
■ STORAGE 274
□ Glove Compartment 274

- Floor Console Storage 275
- Center Console Storage 276
- Flip 'n Stow™ Front Passenger Seat Storage — If Equipped. 278
- Second-Row Passenger Seat Temporary Storage Bin. 279
- Second-Row Map Pocket And Grocery Retainers — If Equipped 279
- In-Floor Storage Bin With Removable Liner . . .279

■ CARGO AREA FEATURES 280
- Rechargeable Flashlight — If Equipped 280
- Cargo Management System 282

■ REAR WINDOW FEATURES 286
- Rear Window Wiper/Washer 286
- Rear Window Defroster 288

■ ROOF LUGGAGE RACK — IF EQUIPPED 289

MIRRORS

Inside Day/Night Mirror — If Equipped

A single ball joint mirror is provided in the vehicle. It is a twist on mirror that has a fixed position at the windshield. The mirror installs on the windshield button with a counterclockwise rotation and requires no tools for mounting. The mirror head can be adjusted up, down, left, and right for various drivers. The mirror should be adjusted to center on the view through the rear window.

Headlight glare from vehicles behind you can be reduced by moving the small control under the mirror to the night position (toward the rear of the vehicle). The mirror should be adjusted while the small control under the mirror is set in the day position (toward the windshield).

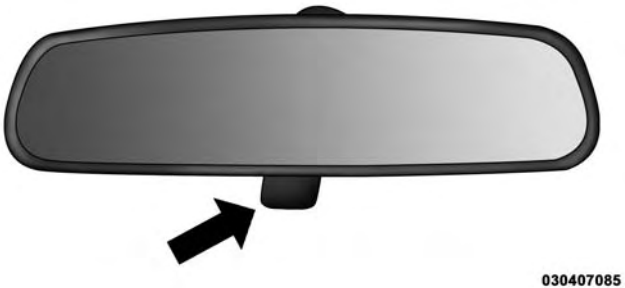

Adjusting Rearview Mirror

Automatic Dimming Mirror — If Equipped

This mirror automatically adjusts for headlight glare from vehicles behind you. This feature will be defaulted on, and only be disabled when the vehicle is moving in reverse.

030436523

Automatic Dimming Mirror

CAUTION!

To avoid damage to the mirror during cleaning, never spray any cleaning solution directly onto the mirror. Apply the solution onto a clean cloth and wipe the mirror clean.

Outside Mirrors

To receive maximum benefit, adjust the outside mirror(s) to center on the adjacent lane of traffic and a slight overlap of the view obtained from the inside mirror.

NOTE: The passenger side convex outside mirror will give a much wider view to the rear, and especially of the lane next to your vehicle.

WARNING!

Vehicles and other objects seen in the passenger side convex mirror will look smaller and farther away than they really are. Relying too much on your passenger side convex mirror could cause you to collide with another vehicle or other object. Use your inside mirror when judging the size or distance of a vehicle seen in the passenger side convex mirror.

Power Mirrors

The power mirror switch is located on the driver's door trim panel.

Power Mirror Switches

Models Without Express Window Feature

Press the mirror select button marked L (left) or R (right) and then press one of the four arrow buttons to move the mirror in the direction the arrow is pointing.

Models With Express Window Feature

Press and release the mirror select button marked L (left) or R (right) and then press one of the four arrow buttons to move the mirror in the direction the arrow is pointing. The selection times out after 30 seconds of inactivity in order to guard against accidentally changing a mirror position following an adjustment.

NOTE: A light in the selected button will illuminate indicating the mirror is activated and can be adjusted.

Power Folding Mirrors — If Equipped

The switch for the power folding mirrors is located between the power mirror switches L (left) and R (right). Press the switch once and the mirrors will fold in, pressing the switch a second time will return the mirrors to the normal driving position.

Power Folding Mirror Switch

NOTE: If the vehicle speed is greater than 10 mph (16 km/h) the folding feature will be disabled.

If the mirrors are in the folded position, and vehicle speed is equal or greater than 10 mph (16 km/h), they will automatically unfold.

Resetting the Power Folding Outside Mirrors

You may need to reset the power folding mirrors if the following occurs:

- The mirrors are accidentally blocked while folding.
- The mirrors are accidentally manually folded/unfolded.
- The mirrors come out of the unfolded position.
- The mirrors shake and vibrate at normal driving speeds.

To reset the power folding mirrors: Fold and unfold them by pressing the button. (This may require multiple button pushes). This resets them to their normal position.

Manual Folding Mirrors — If Equipped

Some models have exterior mirrors that are hinged. The hinge allows the mirror to pivot forward and rearward to resist damage. The hinge has three detent positions: forward, rearward and normal.

Heated Mirrors — If Equipped

These mirrors are heated to melt frost or ice. This feature can be activated whenever you turn on the rear window defroster (if equipped). Refer to “Rear Window Features” in “Understanding The Features Of Your Vehicle” for further information.

Illuminated Vanity Mirrors — If Equipped

An illuminated vanity mirror is on each sun visor. To use the mirror, rotate the sun visor downward and swing the mirror cover upward. The light will turn on automatically. Closing the mirror cover will turn off the light.

Illuminated Vanity Mirror

Sun Visor "Slide-On Rod" Feature — If Equipped

This feature allows for additional flexibility in positioning the visor to block out the sun.

1. Fold down the sun visor.
2. Unclip the visor from the center clip.
3. Pull the sun visor toward the inside rearview mirror to extend it.

Uconnect® PHONE (4.3)

Uconnect® 4.3

Uconnect® Phone is a voice-activated, hands-free, in-vehicle communications system. Uconnect® Phone allows you to dial a phone number with your mobile phone.

Uconnect® Phone supports the following features:

Voice Activated Features:

- Hands Free dialing via Voice ("Call John Smith Mobile" or, "Dial 248-555-1212")
- Redialing last dialed numbers ("Redial")
- Calling Back the last incoming call number ("Call Back")
- View Call logs on screen ("Show incoming calls," "Show Outgoing calls," "Show missed Calls," "Show Recent Calls")
- Searching Contacts phone number ("Search for John Smith Mobile")

Screen Activated Features:

- Dialing via Keypad using touchscreen
- Viewing and Calling contacts from Phonebooks displayed on the touchscreen
- Setting Favorite Contact Phone numbers so they are easily accessible on the Main Phone screen
- Viewing and Calling contacts from Recent Call logs
- Listen to Music on your Bluetooth® Device via the touchscreen
- Pairing up to 10 phones/audio devices for easy access to connect to them quickly

Your mobile phone's audio is transmitted through your vehicle's audio system; the system will automatically mute your radio when using the Uconnect® Phone.

For Uconnect® Customer Support:

- U.S. residents – visit UconnectPhone.com or call 1-877-855-8400.

- Canadian Residents - visit UconnectPhone.com or call, 1-800-465-2001 (English) or 1-800-387-9983 (French).

If your mobile phone only supports the Headset Profile you may not be able to use any Uconnect® Phone features. Refer to your mobile service provider or the phone manufacturer for details.

Uconnect® Phone allows you to transfer calls between the system and your mobile phone as you enter or exit your vehicle and enables you to mute the system's microphone for private conversation.

WARNING!

Any voice commanded system should be used only in safe driving conditions following all applicable

(Continued)

WARNING! *(Continued)*

laws, including laws regarding phone use. Your attention should be focused on safely operating the vehicle. Failure to do so may result in a collision causing serious injury or death.

The Uconnect® Phone is driven through your Bluetooth® "Hands-Free Profile" mobile phone. Uconnect® features Bluetooth® technology - the global standard that enables different electronic devices to connect to each other without wires or a docking station, so Uconnect® Phone works no matter where you stow your mobile phone (be it your purse, pocket, or briefcase), as long as your phone is turned on and has been paired to the vehicle's Uconnect® Phone. The Uconnect® Phone allows up to ten mobile phones or audio devices to be linked to the system. Only one linked (or paired) mobile

phone and one audio device can be used with the system at a time. The system is available in English, Spanish, or French languages.

Uconnect® Phone Button

The Uconnect® Phone Button is used to enter the phone mode and make calls, show recent, incoming, outgoing calls, view phonebook etc., When you press the button you will hear a BEEP. The beep is your signal to give a command.

Uconnect® Voice Command Button

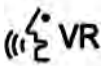

The Uconnect® Voice Command Button is only used for "barge in" and when you are already in a call and you want to send Tones or make another call.

The Uconnect® Phone is fully integrated with the vehicle's audio system. The volume of the Uconnect® Phone can be adjusted either from the radio volume control knob or from the steering wheel radio control (right switch), if so equipped.

Operation

Voice commands can be used to operate the Uconnect® Phone and to navigate through the Uconnect® Phone menu structure. Voice commands are required after most Uconnect® Phone prompts. There are two general methods for how Voice Command works:

1. Say compound commands like "Call John Smith mobile."
2. Say the individual commands and allow the system to guide you to complete the task.

You will be prompted for a specific command and then guided through the available options.

- Prior to giving a voice command, one must wait for the beep, which follows the "Listen" prompt or another prompt.

- For certain operations, compound commands can be used. For example, instead of saying "Call" and then "John Smith" and then "mobile," the following compound command can be said: "Call John Smith mobile."
- For each feature explanation in this section, only the compound command form of the voice command is given. You can also break the commands into parts and say each part of the command when you are asked for it. For example, you can use the compound command form voice command "Search for John Smith," or you can break the compound command form into two voice commands: "Search Contact" and when asked "John Smith." Please remember, the Uconnect® Phone works best when you talk in a normal conversational tone, as if speaking to someone sitting a few feet/meters away from you.

Natural Speech

Your Uconnect® Phone Voice system uses a Natural Language Voice Recognition (VR) engine.

Natural speech allows the user to speak commands in phrases or complete sentences. The system filters out certain non-word utterances and sounds such as "ah" and "eh." The system handles fill-in words such as "I would like to."

The system handles multiple inputs in the same phrase or sentence such as "make a phone call" and "to Kelly Smith." For multiple inputs in the same phrase or sentence, the system identifies the topic or context and provides the associated follow-up prompt such as "Who do you want to call?" in the case where a phone call was requested but the specific name was not recognized.

The system utilizes continuous dialog; when the system requires more information from the user it will ask a

question to which the user can respond without pushing the "Voice Command" button on your steering wheel.

Voice Command Tree

Refer to "Voice Tree" in this section.

Help Command

If you need assistance at any prompt, or if you want to know your options at any prompt, say "Help" following the beep.

To activate the Uconnect® Phone from idle, simply push the button on your steering wheel and say a command or say "help." All Uconnect® Phone sessions begin with a push of the button on the radio control head.

Cancel Command

At any prompt, after the beep, you can say "Cancel" and you will be returned to the main menu.

You can also push the or button on your steering wheel when the system is listening for a command and be returned to the main or previous menu.

Pair (Link) Uconnect® Phone To A Mobile Phone

To begin using your Uconnect® Phone, you must pair your compatible Bluetooth® enabled mobile phone.

To complete the pairing process, you will need to reference your mobile phone Owner's Manual. The Uconnect® website may also provide detailed instructions for pairing.

NOTE:

- You must have Bluetooth® enabled on your phone to complete this procedure.
- The vehicle must be in PARK.

1. You can do either of the following:
   a. Push the SETTINGS button on the faceplate, page down to the "Phone/Bluetooth®" button on the touchscreen, press it and you will see the Paired Phones screen. If there are no paired phones you will see <Empty> as the first device name.
   b. Push the MORE button on the faceplate, then press the "Phone" button on the touchscreen and you will go to the Uconnect® Phone main screen. Press the "Settings" button on the touchscreen. If there are no phones currently paired a pop-up will appear. If you select Yes you will go the Paired Phones screen, if you select No you will return to the Uconnect® Phone main menu.
2. At the Paired Phones screen press the "Add Device" button on the touchscreen and a pop-up with instructions will appear.
3. Search for available devices on your Bluetooth® enabled mobile phone. When prompted on the phone, select the "Uconnect®" device and enter the PIN.
4. When the pairing process has successfully completed, the system will prompt you to choose whether or not this is your favorite phone. Selecting Yes will make this phone the highest priority. This phone will take precedence over other paired phones within range.

Pair A Bluetooth® Streaming Audio Device

1. Push the PLAYER button on the faceplate to begin.
2. Press the "Source" button on the touchscreen.
3. Change the Source to Bluetooth®.
4. Press the "Add Device" button on the touchscreen.
5. Search for available devices on your Bluetooth® enabled Audio Device. When prompted on the device, select the "Uconnect®" device and enter the PIN.
6. Uconnect® Phone will display an in process screen while the system is connecting.
7. When the pairing process has successfully completed, the system will prompt you to choose whether or not this is your favorite device. Selecting Yes will make this device the highest priority. This device will take precedence over other paired devices within range.

NOTE: If No is selected, device priority is determined by the order in which it was paired. The latest device paired will have the higher priority.

You can also use the following VR command to bring up a list of paired audio devices.

- "Show Paired Audio Devices."

Connecting To A Particular Mobile Phone Or Audio Device

Uconnect® Phone will automatically connect to the highest priority paired phone and/or Audio Device within range. If you need to choose a particular Phone or Audio Device follow these steps:

1. Push the SETTINGS button on the faceplate.
2. Press the "Phone/Bluetooth®" button on the touchscreen.

3. Press to select the particular Phone or the "Phone/Audio" button on the touchscreen and then an Audio Device.
4. At the Options pop-up screen press the "Connect Device" button on the touchscreen.
5. Press the "X" to exit out of the Settings screen.

Disconnecting A Phone Or Audio Device

1. Push the SETTINGS button on the faceplate.
2. Press the "Phone/Bluetooth®" button on the touchscreen.
3. Select the Phone or Audio Device.
4. At the Options pop-up screen press the "Disconnect Device" button on the touchscreen.
5. Press the "X" to exit out of the Settings screen.

Deleting A Phone Or Audio Device

1. Push the SETTINGS button on the faceplate.
2. Press the "Phone/Bluetooth®" button on the touchscreen.
3. Select the Phone or Audio Device.
4. At the Options pop-up screen press the "Delete Device" button on the touchscreen.
5. Press the "X" to exit out of the Settings screen.

Making A Phone Or Audio Device A Favorite

1. Push the SETTINGS button on the faceplate.
2. Press the "Phone/Bluetooth®" button on the touchscreen.
3. Select a different Phone or Audio Device then the currently connected device.

4. At the Options pop-up screen press the "Make Favorite" button on the touchscreen; you will see the chosen device move to the top of the list.

5. Press the "X" to exit out of the Settings screen.

Phonebook Download (Automatic Phonebook Transfer From Mobile Phone) — If Equipped

If equipped and specifically supported by your phone, Uconnect® Phone automatically downloads names (text names) and number entries from the mobile phone's phonebook. Specific Bluetooth® Phones with Phone Book Access Profile may support this feature. See Uconnect® website, UconnectPhone.com, for supported phones.

- To call a name from a downloaded mobile phone book, follow the procedure in the Voice Recognition Quick Reference section.
- Automatic download and update of a phone book, if supported, begins as soon as the Bluetooth® wireless phone connection is made to the Uconnect® Phone, for example, after you start the vehicle.
- A maximum of 2000 entries per phone will be downloaded and updated every time a phone is connected to the Uconnect® Phone.
- Depending on the maximum number of entries downloaded, there may be a short delay before the latest downloaded names can be used. Until then, if available, the previously downloaded phonebook is available for use.
- Only the phonebook of the currently connected mobile phone is accessible.
- This downloaded phonebook cannot be edited or deleted on the Uconnect® Phone. These can only be

edited on the mobile phone. The changes are transferred and updated to Uconnect® Phone on the next phone connection.

Emergency And Towing Assistance

The 911/Help numbers can only be altered. These can not be deleted or the names can not be changed.

To change the 911/Help number follow these steps.

1. Press the "Phonebook" button on the touchscreen from the Phone main screen.
2. Press the "911/Help" button on the touchscreen. Press the appropriate listing to alter, Emergency for example.
3. Once Emergency is pressed, the "Edit" button on the touchscreen appears. Press the "Edit" button on the touchscreen and you will be given the choice to Edit Number or Reset to Default.
4. Follow the on-screen prompts to complete the task.

Phone Call Features

The following features can be accessed through the Uconnect® Phone if the feature(s) are available on your mobile service plan. For example, if your mobile service plan provides three-way calling, this feature can be accessed through the Uconnect® Phone. Check with your mobile service provider for the features that you have.

Ways To Initiate A Phone Call

Listed below are all the ways you can initiate a phone call with Uconnect® Phone.

- Redial
- Dial by pressing in the number
- Voice Commands (Dial by Saying a Number, Call by Saying a Phonebook Name, Redial, or Call Back)
- Mobile Phonebook
- Recent Call Log

NOTE: All of the above operations except Redial can be done with one call or less active.

Dial By Saying A Number

1. Push the button to begin.
2. After the "Listening" prompt and the following beep, say "Dial 248-555-1212."
3. The Uconnect® Phone will dial 248-555-1212.

Call By Saying A Phonebook Name

1. Push the "Phone" button on your steering wheel to begin.
2. After the "Listening" prompt and the following beep, say "Call John Doe Mobile."
3. The Uconnect® Phone will dial the number associated with John Doe, or if there are multiple numbers it will ask which number you want to call for John Doe.

Call Controls

The touchscreen allows you to control the following call features:

- Answer
- End
- Ignore
- Hold/unhold
- Mute/unmute
- Transfer the call to/from the phone
- Swap two active calls
- Join two active calls together

Touch-Tone Number Entry

1. Press the “Phone” button on the touchscreen.
2. Press the “Dial” button on the touchscreen.
3. The Touch-Tone screen will be displayed.
4. Use the numbered buttons on the touchscreen to enter the number and press “Call.”

To send a touch tone using Voice Recognition (VR), press the button while in a call and say “1234#” or you can say “Send Voicemail Password” if Voicemail password is stored in your mobile phonebook.

Recent Calls

You may browse up to 34 of the most recent of each of the following call types:

- Incoming Calls
- Outgoing Calls
- Missed Calls
- All Calls

These can be accessed by touching the recent calls button on the touchscreen on the Phone main screen.

You can also push the button and say “Show my incoming calls” from any screen and the Incoming calls will be displayed.

NOTE: Incoming can also be replaced with “Outgoing”, “Recent” or “Missed.”

Answer Or Reject An Incoming Call — No Call Currently In Progress

When you receive a call on your mobile phone, the Uconnect® Phone will interrupt the vehicle audio system, if on, and will display a pop-up showing Answer or

Ignore. Press the Answer button on the touchscreen or push the button on the steering wheel to accept the call.

Answer Or Reject An Incoming Call — Call Currently In Progress

If a call is currently in progress and you have another incoming call, you will hear the same network tones for call waiting that you normally hear when using your mobile phone. Uconnect® Phone will then interrupt the vehicle audio system, if on, and will display a pop-up showing Answer, Ignore or Transfer. Push the button to place the current call on hold and answer the incoming call.

NOTE: The Uconnect® Phone compatible phones in the market today do not support rejecting an incoming call when another call is in progress. Therefore, the user can only answer an incoming call or ignore it.

Making A Second Call While Current Call Is In Progress

To make a second call while you are currently on a call, push the VR button and say "Dial" or "Call" followed by the phone number or phonebook entry you wish to call. The first call will be on hold while the second call is in progress. Or you can place a call on hold by pressing the "Hold" button on the touchscreen, then dial a number from the dialpad, recent calls or from the phonebooks. To go back to the first call, refer to "Toggling Between Calls" in this section. To combine two calls, refer to "Join Calls" in this section.

Toggling Between Calls

If two calls are in progress (one active and one on hold), push the button until you hear a single beep, indicating that the active and hold status of the two calls have switched. Only one call can be placed on

hold at a time. Also you can press the "Swap" button on the touchscreen, on the Phone main screen.

Join Calls

When two calls are in progress (one active and one on hold), press the "Join Calls" button on the Phone main screen to combine all calls into a Conference Call.

Call Termination

To end a call in progress, momentarily press the "End" button on the touchscreen or the button. Only the active call(s) will be terminated and if there is a call on hold, it will become the new active call. If the active call is terminated by the far end, a call on hold may not become active automatically. This is cell phone-dependent.

Redial

1. Press the "Redial" button on the touchscreen, or push the button and after the "Listening" prompt and the following beep, say "Redial."
2. The Uconnect® Phone will call the last number that was dialed from your mobile phone.

Call Continuation

Call continuation is the progression of a phone call on the Uconnect® Phone after the vehicle ignition key has been switched to OFF.

- After the ignition key is switched to OFF, a call can continue on the Uconnect® Phone either until the call ends, or until the vehicle battery condition dictates cessation of the call on the Uconnect® Phone and transfer of the call to the mobile phone.

Uconnect® Phone Features

Emergency Assistance

If you are in an emergency and the mobile phone is reachable:

- Pick up the phone and manually dial the emergency number for your area.

If the phone is not reachable and the Uconnect® Phone is operational, you may reach the emergency number as follows:

- Push the button to begin,
- After the "Listening" prompt and the following beep, say "Emergency" and the Uconnect® Phone will instruct the paired mobile phone to call the emergency number. This feature is supported in the U.S., Canada, and Mexico.

NOTE:

- The emergency number dialed is based on the country where the vehicle is purchased (911 for the U.S. and Canada and 060 for Mexico). The number dialed may not be applicable with the available mobile service and area.
- The Uconnect® Phone does slightly lower your chances of successfully making a phone call as to that for the mobile phone directly.

WARNING!

Your phone must be turned on and connected to the Uconnect® Phone to allow use of this vehicle feature in emergency situations, when the mobile phone has network coverage and stays connected to the Uconnect® Phone.

Roadside Assistance/Towing Assistance

If you need roadside/towing assistance:

- Push the button to begin,
- After the "Listening" prompt and the following beep, say "Roadside Assistance" or say "Towing Assistance."

NOTE: The roadside/towing assistance number dialed is based on the country where the vehicle is purchased (1-800-528-2069 for the U.S., 1-800-363-4869 for Canada, 55-14-3454 for Mexico City and 1-800-712-3040 for outside Mexico City in Mexico). Please refer to the Chrysler Group LLC 24-Hour "Roadside Assistance" coverage details in the Warranty Information Booklet and on the 24-Hour Roadside Assistance Card.

Voice Mail Calling

To learn how to access your voice mail, refer to "Working with Automated Systems."

Working With Automated Systems

This method is used in instances where one generally has to push numbers on the mobile phone keypad while navigating through an automated telephone system.

You can use your Uconnect® Phone to access a voice mail system or an automated service, such as a paging service or automated customer service line. Some services require immediate response selection. In some instances, that may be too quick for use of the Uconnect® Phone.

When calling a number with your Uconnect® Phone that normally requires you to enter in a touch-tone sequence on your mobile phone keypad, you can utilize the touchscreen or push the button and say the word "Send" then the sequence you wish to enter. For

example, if required to enter your PIN followed with a pound, (3 7 4 6 #), you can push the VR button and say, "Send 3 7 4 6 #." Saying "Send" followed by a number, or sequence of numbers, is also to be used for navigating through an automated customer service center menu structure, and to leave a number on a pager.

You can also send stored mobile phonebook entries as tones for fast and easy access to voice mail and pager entries. For example, if you previously created a Phonebook entry and/or Last Name as "Voice Password," then if you push the VR button and say "Send Voicemail Password," the Uconnect® Phone will then send the corresponding phone number associated with the phonebook entry, as tones over the phone.

NOTE:

- The first number encountered for that contact will be sent. All other numbers entered for that contact will be ignored.
- You may not hear all of the tones due to mobile phone network configurations. This is normal.
- Some paging and voice mail systems have system time out settings that are too short and may not allow the use of this feature.
- Pauses, wait or other characters that are supported by some phones are not supported over Bluetooth®. These additional symbols will be ignored when dialing a numbered sequence.

Barge In — Overriding Prompts

The VR button can be used when you wish to skip part of a prompt and issue your voice command immediately. For example, if a prompt is asking "There are two numbers with the name John. Say the full name" you could push the VR button and say, "John Smith" to select that option without having to listen to the rest of the voice prompt.

Voice Response Length

It is possible for you to choose between Brief and Detailed Voice Response Length.

1. Push the MORE button on the faceplate, then press the "Settings" button on the touchscreen.
2. Press the "Display" button on the touchscreen, then scroll down to Voice Response Length.
3. Select either "Brief" or "Detailed" by pressing the box next to the selection. A check-mark will appear to indicate your selection.

Phone And Network Status Indicators

Uconnect® Phone will provide notification to inform you of your phone and network status when you are attempting to make a phone call using Uconnect® Phone. The status is given for network signal strength and phone battery strength.

Dialing Using The Mobile Phone Keypad

WARNING!

Driving while distracted can result in loss of vehicle control, accident and injury. It is strongly recommended that you use extreme caution when using any device or feature that may take your focus off the road or your hands off the steering wheel. Your primary responsibility is the safe operation of your vehicle. We recommend against the use of any hand-held device while driving, encourage the use of voice-operated systems when possible and that you become aware of applicable laws that may affect the use of electronic devices while driving.

You can dial a phone number with your mobile phone keypad and still use the Uconnect® Phone (while dialing via the mobile phone keypad, the user must exercise caution and take precautionary safety measures). By dialing a number with your connected Bluetooth® mobile phone, the audio will be played through your vehicle's audio system. The Uconnect® Phone will work the same as if you dial the number using voice a command.

NOTE: Certain brands of mobile phones do not send the dial ring to the Uconnect® Phone to play it on the vehicle audio system, so you will not hear it. Under this situation, after successfully dialing a number the user may feel that the call did not go through even though the call is in progress. Once your call is answered, you will hear the audio.

Mute/Un-Mute (Mute OFF)

When you mute the Uconnect® Phone, you will still be able to hear the conversation coming from the other party, but the other party will not be able to hear you. To mute the Uconnect® Phone simply press the "Mute" button on the Phone main screen.

Advanced Phone Connectivity

Transfer Call To And From Mobile Phone

The Uconnect® Phone allows ongoing calls to be transferred from your mobile phone to the Uconnect® Phone without terminating the call. To transfer an ongoing call from your connected mobile phone to the Uconnect® Phone or vice versa, press the "Transfer" button on the Phone main screen.

Connect Or Disconnect Link Between the Uconnect® Phone And Mobile Phone

If you would like to connect or disconnect the Bluetooth® connection between a Uconnect® Phone paired mobile phone and the Uconnect® Phone, follow the instructions described in your mobile phone User's Manual.

Things You Should Know About Your Uconnect® Phone

Voice Command

- For best performance, adjust the rearview mirror to provide at least ½ inch (1 cm) gap between the overhead console (if equipped) and the mirror.
- Always wait for the beep before speaking.

- Speak normally without pausing, just as you would speak to a person sitting a few feet/meters away from you.
- Make sure that no one other than you is speaking during a Voice Command period.

Performance is maximized under:

- Low-to-medium blower setting
- Low-to-medium vehicle speed
- Low road noise
- Smooth road surface
- Fully closed windows
- Dry weather condition

NOTE:

- Even though the system is designed for users speaking in North American English, French, and Spanish accents, the system may not always work for some.
- When navigating through an automated system such as voice mail, or when sending a page, at the end of speaking the digit string, make sure to say “Send.”
- Storing names in the phonebook when the vehicle is not in motion is recommended.
- It is not recommended to store similar sounding names in the Uconnect® Phonebook.
- Phonebook (Downloaded and Uconnect® Phone Local) name recognition rate is optimized when the entries are not similar.

- Numbers must be spoken in single digits. “800” must be spoken “eight-zero-zero” not “eight hundred.”
- You can say “O” (letter “O”) for “0” (zero).
- Even though international dialing for most number combinations is supported, some shortcut dialing number combinations may not be supported.
- In a convertible vehicle, system performance may be compromised with the convertible top down.

Far End Audio Performance

Audio quality is maximized under:

- Low-To-Medium Blower Setting
- Low-To-Medium Vehicle Speed
- Low Road Noise
- Smooth Road Surface
- Fully Closed Windows
- Dry Weather Conditions
- Operation From The Driver’s Seat
- Performance, such as audio clarity, echo, and loudness to a large degree rely on the phone and network, and not the Uconnect® Phone
- Echo at the phone far end can sometimes be reduced by lowering the in-vehicle audio volume
- In a convertible vehicle, system performance may be compromised with the convertible top down

Bluetooth® Communication Link

Mobile phones have been found to lose connection to the Uconnect® Phone. When this happens, the connection can generally be reestablished by switching the phone off/on. Your mobile phone is recommended to remain in Bluetooth® ON mode.

Power-Up

After switching the ignition key from OFF to either the ON or ACC position, or after a language change, you must wait at least 15 seconds prior to using the system.

Voice Tree

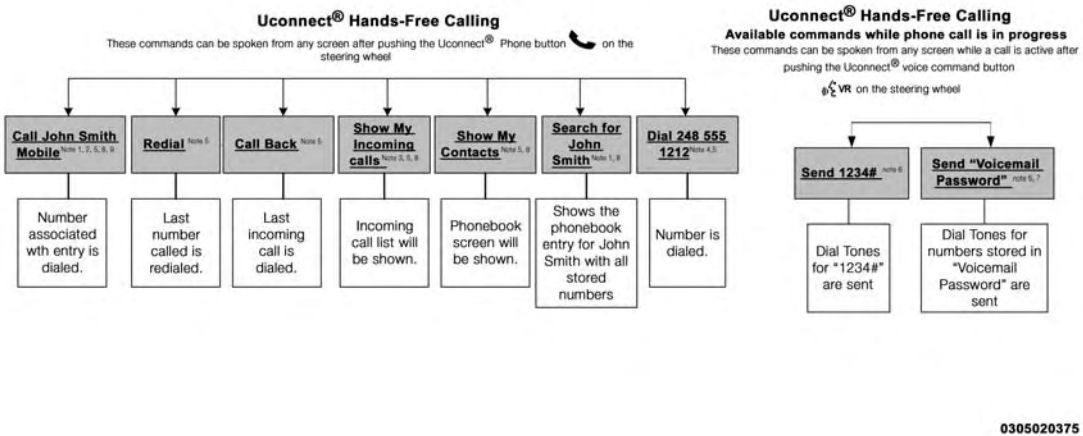
Uconnect® Hands-Free Calling
These commands can be spoken from any screen after pushing the Uconnect® Phone button on the steering wheel
Call John Smith Mobile Note 1, 2, 5, 8, 9
Redial Note 5
Call Back Note 5
Show My Incoming calls Note 3, 5, 8
Show My Contacts Note 5, 8
Search for John Smith Note 1, 8
Dial 248 555 1212 Note 4,5
Number associated wth entry is dialed.
Last number called is redialed.
Last incoming call is dialed.
Incoming call list will be shown.
Phonebook screen will be shown.
Shows the phonebook entry for John Smith with all stored numbers
Number is dialed.
Uconnect® Hands-Free Calling
Available commands while phone call is in progress
These commands can be spoken from any screen while a call is active after pushing the Uconnect® voice command button
VR on the steering wheel
Send 1234# Note 6
Send "Voicemail Password" Note 6, 7
Dial Tones for "1234#" are sent
Dial Tones for numbers stored in "Voicemail Password" are sent
0305020375

NOTE:

- You can replace “John Smith” with any name in your mobile or favorite phone book. You can also say “Send a message to John Smith” and the system will ask you which phone number you want to send a message to for John Smith.
- You can replace “Mobile” with “Home,” “Work” or “Other.”
- You can replace “Incoming Calls” with “Outgoing Calls” or “Missed Calls.”
- Messaging commands only work if the Uconnect® system is equipped with this feature and the mobile phone supports messaging over Bluetooth®.
- You can replace “248 555 1212” with any phone number supported by your Mobile phone.
- You can replace “4” with any message number shown on the screen.
- If your phone does not support phonebook download or call log download over Bluetooth® than these commands will return a response that the contact does not exist in the phonebook.
- Available Voice Commands are shown in bold face and underlined in the gray shaded boxes.

General Information

This device complies with Part 15 of the FCC rules and RSS 210 of Industry Canada. Operation is subject to the following conditions:

- Changes or modifications not expressly approved by the party responsible for compliance could void the user’s authority to operate the equipment.

- This device may not cause harmful interference.
- This device must accept any interference received, including interference that may cause undesired operation.

Uconnect® PHONE (8.4/8.4N)

Uconnect® 8.4/8.4Nav

Uconnect® Phone is a voice-activated, hands-free, in-vehicle communications system. Uconnect® Phone allows you to dial a phone number with your mobile phone.

Uconnect® Phone supports the following features:

Voice Activated Features:

- Hands Free dialing via Voice (“Call John Smith Mobile” or, “Dial 248 555 1212”).
- Hands Free text to speech listening of your incoming SMS messages.
- Hands Free text messaging (“Send a message to John Smith Mobile”).
- Redialing last dialed numbers (“Redial”).
- Calling Back the last incoming call number (“Call Back”).
- View Call logs on screen (“Show incoming calls,” “Show Outgoing calls,” “Show missed Calls,” “Show Recent Calls”).
- Searching Contacts phone number (“Search for John Smith Mobile”).

Screen Activated Features

- Dialing via Keypad using touchscreen.
- Viewing and Calling contacts from Phonebooks displayed on the touchscreen.
- Setting Favorite Contact Phone numbers so they are easily accessible on the Main Phone screen.
- Viewing and Calling contacts from Recent Call logs.
- Reviewing your recent Incoming SMS.
- Sending a text message via the touchscreen.
- Listen to Music on your Bluetooth® Device via the touchscreen.
- Pairing up to 10 phones/audio devices for easy access to connect to them quickly.

NOTE: Your phone must be capable of SMS messaging via Bluetooth® for messaging features to work properly. Your mobile phone's audio is transmitted through your vehicles audio system; the system will automatically mute your radio when using the Uconnect® Phone. For Uconnect® customer support, visit the following website:

- U.S. residents - visit UconnectPhone.com or call 1-877-855-8400.
- Canadian residents - visit UconnectPhone.com or call 1-800-465-2001 (English) or 1-800-387-9983 (French).

Uconnect® Phone allows you to transfer calls between the system and your mobile phone as you enter or exit your vehicle and enables you to mute the system's microphone for private conversation.

WARNING!

Any voice commanded system should be used only in safe driving conditions following all applicable laws, including laws regarding phone use. Your attention should be focused on safely operating the vehicle. Failure to do so may result in an accident causing serious injury or death.

The Uconnect® Phone is driven through your Bluetooth® "Hands-Free Profile" mobile phone. Uconnect® features Bluetooth® technology - the global standard that enables different electronic devices to connect to each other without wires or a docking station, so Uconnect® Phone works no matter where you stow your mobile phone (be it your purse, pocket, or briefcase), as long as your phone is turned on and has been paired to the vehicle's Uconnect® Phone. The Uconnect® Phone allows up to ten mobile phones or audio devices to be linked to the system. Only one linked (or paired) mobile phone and one audio device can be used with the system at a time. The system is available in English, Spanish, or French languages.

Uconnect® Phone Button

The Uconnect® Phone button is used to enter the phone mode and make calls, show recent, incoming, outgoing calls, view phonebook etc., When you push the button you will hear a BEEP. The beep is your signal to give a command.

Uconnect® Voice Command Button

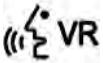

The Uconnect® Voice Command button is only used for "barge in" and when you are already in a call and you want to send Tones or make another call.

The button is also used to access the Voice Commands for the Uconnect® Voice Command features if

your vehicle is equipped. Please see the Uconnect® Voice Command section for direction on how to use the button.

The Uconnect® Phone is fully integrated with the vehicles audio system. The volume of the Uconnect® Phone can be adjusted either from the radio volume control knob or from the steering wheel radio control (right switch), if so equipped.

Operation

Voice commands can be used to operate the Uconnect® Phone and to navigate through the Uconnect® Phone menu structure. Voice commands are required after most Uconnect® Phone prompts. There are two general methods for how Voice Command works:

1. Say compound commands like “Call John Smith mobile.”
2. Say the individual commands and allow the system to guide you to complete the task.

You will be prompted for a specific command and then guided through the available options.

- Prior to giving a voice command, one must wait for the beep, which follows the “Listen” prompt or another prompt.
- For certain operations, compound commands can be used. For example, instead of saying “Call” and then “John Smith” and then “mobile”, the following compound command can be said: “Call John Smith mobile.”
- For each feature explanation in this section, only the compound command form of the voice command is given. You can also break the commands into parts and say each part of the command when you are asked for it. For example, you can use the compound command

form voice command "Search for John Smith," or you can break the compound command form into two voice commands: "Search Contact" and when asked "John Smith." Please remember, the Uconnect® Phone works best when you talk in a normal conversational tone, as if speaking to someone sitting a few feet/meters away from you.

Natural Speech

Your Uconnect® Phone Voice system uses a Natural Language Voice Recognition (VR) engine.

Natural speech allows the user to speak commands in phrases or complete sentences. The system filters out certain non-word utterances and sounds such as "ah" and "eh." The system handles fill-in words such as "I would like to."

The system handles multiple inputs in the same phrase or sentence such as "make a phone call" and "to Kelly Smith." For multiple inputs in the same phrase or sentence, the system identifies the topic or context and provides the associated follow-up prompt such as "Who do you want to call?" in the case where a phone call was requested but the specific name was not recognized.

The system utilizes continuous dialog; when the system requires more information from the user it will ask a question to which the user can respond without pushing the "Voice Command" VR button on your steering wheel.

Voice Command Tree

Refer to "Voice Tree" in this section.

Help Command

If you need assistance at any prompt, or if you want to know your options at any prompt, say “Help” following the beep.

To activate the Uconnect® Phone from idle, simply push the button on your steering wheel and say a command or say “help.” All Uconnect® Phone sessions begin with a push of the button on the radio control head.

Cancel Command

At any prompt, after the beep, you can say “Cancel” and you will be returned to the main menu.

You can also push the or VR button on your steering wheel when the system is listening for a command and be returned to the main or previous menu.

Pair (Link) Uconnect® Phone To A Mobile Phone

To begin using your Uconnect® Phone, you must pair your compatible Bluetooth® enabled mobile phone.

NOTE:

- You must have Bluetooth® enabled on your mobile phone to complete this procedure.
- The vehicle must be in PARK.

To complete the pairing process, you will need to reference your mobile phone Owner’s Manual. The Uconnect® website may also provide detailed instructions for pairing.

1. Press the “Phone” button on the touchscreen to begin.

2. If there is no phone currently connected with the system, a pop-up will appear.

Mobile Phone Pairing

3. Select "Yes" to begin the pairing process. Then, search for available devices on your Bluetooth® enabled mobile phone. When prompted on the phone, enter the name and PIN shown on the Uconnect® screen.
   - If "No" is selected, press the "Settings" button from the Uconnect® Phone main screen.
   - Press the "Add Device" button on the touchscreen.
   - Search for available devices on your Bluetooth® enabled mobile phone. When prompted on the phone, enter the name and PIN shown on the Uconnect® screen.
   - See step 4 to complete the process.
4. Uconnect® Phone will display an in progress screen while the system is connecting.

Mobile Phone Pairing Progress

5. When the pairing process has successfully completed, the system will prompt you to choose whether or not this is your favorite phone. Selecting "Yes" will make this phone the highest priority. This phone will take precedence over other paired phones within range.

Pair Additional Mobile Phones

1. Press the "Settings" button from the Phone main screen.
2. Press the "Add Device" button on the touchscreen.
3. Search for available devices on your Bluetooth® enabled mobile phone. When prompted on the phone, enter the name and PIN shown on the Uconnect® screen.
4. Uconnect® Phone will display an in process screen while the system is connecting.
5. When the pairing process has successfully completed, the system will prompt you to choose whether or not this is your favorite phone. Selecting "Yes" will make this phone the highest priority. This phone will take precedence over other paired phones within range.

NOTE: For phones which are not made a favorite, the phone priority is determined by the order in which it was paired. The latest phone paired will have the higher priority.

You can also use the following VR commands to bring up the Paired Phone screen from any screen on the radio:

- "Show Paired Phones"
- "Connect My Phone"

Pair A Bluetooth® Streaming Audio Device

1. Press the "Player" button on the touchscreen to begin.
2. Change the Source to Bluetooth®.
3. Press the "Bluetooth®" button on the touchscreen to display the Paired Audio Devices screen.
4. Press the "Add Device" button on the touchscreen.

NOTE: If there is no device currently connected with the system, a pop-up will appear.

5. Search for available devices on your Bluetooth® enabled audio device. When prompted on the device, enter the PIN shown on the Uconnect® screen.
6. Uconnect® Phone will display an in process screen while the system is connecting.
7. When the pairing process has successfully completed, the system will prompt you to choose whether or not this is your favorite device. Selecting "Yes" will make this device the highest priority. This device will take precedence over other paired devices within range.

NOTE: For devices which are not made a favorite, the device priority is determined by the order in which it was paired. The latest device paired will have the higher priority.

You can also use the following VR command to bring up a list of paired audio devices:

- "Show Paired Phones"
- "Connect My Phone"

Connecting To A Particular Mobile Phone Or Audio Device After Pairing

Uconnect® Phone will automatically connect to the highest priority paired phone and/or Audio Device within range. If you need to choose a particular phone or Audio Device follow these steps:

1. Press the "Settings" button on the touchscreen.
2. Press the "Paired Phones" or "Paired Audio Sources" button on the touchscreen.
3. Press to select the particular Phone or the particular Audio Device.
4. Press the "X" to exit out of the Settings screen.

Disconnecting A Phone Or Audio Device

1. Press the "Settings" button on the touchscreen.
2. Press the "Paired Phones" or "Paired Audio Devices" button on the touchscreen.
3. Press the settings icon button located to the right of the device name.
4. The options pop-up will be displayed.
5. Press the "Disconnect Device" button on the touchscreen.
6. Press the "X" to exit out of the Settings screen.

Deleting A Phone Or Audio Device

1. Press the “Settings” button on the touchscreen.
2. Press the “Pair Phones” or “Paired Audio Devices” button on the touchscreen.
3. Press the settings icon button located to the right of the device name for a different Phone or Audio Device than the currently connected device.
4. The options pop-up will be displayed.
5. Press the “Delete Device” button on the touchscreen.
6. Press the “X” to exit out of the Settings screen.

Making A Phone Or Audio Device A Favorite

1. Press the “Settings” button on the touchscreen.
2. Press the “Paired Phones” or “Paired Audio Devices” button on the touchscreen.
3. Press the settings icon button located to the right of the device name.
4. The options pop-up will be displayed.
5. Press the “Make Favorite” button on the touchscreen; you will see the chosen device move to the top of the list.
6. Press the “X” to exit out of the Settings screen.

Phonebook Download (Automatic Phonebook Transfer From Mobile Phone) — If Equipped

If equipped and specifically supported by your phone, Uconnect® Phone automatically downloads names (text names) and number entries from the mobile phone’s phonebook. Specific Bluetooth® Phones with Phone Book Access Profile may support this feature. See Uconnect® website, UconnectPhone.com, for supported phones.

- To call a name from a downloaded mobile phone book, follow the procedure in the Voice Recognition Quick Reference section.
- Automatic download and update of a phone book, if supported, begins as soon as the Bluetooth® wireless phone connection is made to the Uconnect® Phone, for example, after you start the vehicle.
- A maximum of 2000 entries per phone will be downloaded and updated every time a phone is connected to the Uconnect® Phone.
- Depending on the maximum number of entries downloaded, there may be a short delay before the latest downloaded names can be used. Until then, if available, the previously downloaded phonebook is available for use.
- Only the phonebook of the currently connected mobile phone is accessible.
- This downloaded phonebook cannot be edited or deleted on the Uconnect® Phone. These can only be edited on the mobile phone. The changes are transferred and updated to Uconnect® Phone on the next phone connection.

Managing Your Favorite Phonebook

There are three ways you can add an entry to your Favorite Phonebook.

1. During an active call of a number to make a favorite, press and hold a favorite button on the top of the phone main screen.
2. After loading the mobile phonebook, select Phonebook from the Phone main screen, then select the

appropriate number. Press the "+" next to the selected number to display the options pop-up. In the pop-up select "Add to Favorites."

Phonebook Favorites

NOTE: If the Favorites list is full, you will be asked to remove an existing favorite.

3. From the Phone main screen, select Phonebook. From the Phonebook screen, select the "Favorites" button on the touchscreen and then select the "+" button on the touchscreen located to the right of the phonebook record. Select an empty entry and press the "+" on that selected entry. When the Options pop-up appears, press "Add from Mobile." You will then be asked which contact and number to choose from your mobile phonebook. When complete the new favorite will be shown.

Add From Mobile

To Remove A Favorite

1. To remove a Favorite, select phonebook from the Phone main screen.
2. Next select Favorites on the left side of the screen and then press the "+" Options button on the touchscreen.
3. Press the "+" next to the Favorite you would like to remove.

Remove From Favorites

4. The Options pop-up will display, press "Remove from Favs."

Emergency And Towing Assistance

The Emergency and Towing Assistance Favorite numbers can only be altered. These cannot be deleted and the names cannot be changed.

To change the Emergency or Towing Assistance numbers follow these steps.

1. Press the "Phonebook" button from the Phone main screen.
2. Press the "Favorites" button on the touchscreen. Scroll to the bottom of the list to locate the Emergency and Towing Assistance Favorites.
3. Press the "+" Options button on the touchscreen.
4. Press the "+" next to appropriate Favorite that is to be altered.

0456012195

Emergency And Breakdown Assistance

5. The Options pop-up will appear and you can choose between Editing the number or resetting the number to default.

Phone Call Features

The following features can be accessed through the Uconnect® Phone if the feature(s) are available and supported by Bluetooth® on your mobile service plan. For example, if your mobile service plan provides three-way calling, this feature can be accessed through the Uconnect® Phone. Check with your mobile service provider for the features that you have.

Ways To Initiate A Phone Call

Listed below are all the ways you can initiate a phone call with Uconnect® Phone.

- Redial
- Dial by pressing in the number
- Voice Commands (Dial by Saying a Name, Call by Saying a Phonebook Name, Redial or Call Back)
- Favorites
- Mobile Phonebook
- Recent Call Log
- SMS Message Viewer

Dial By Saying A Number

1. Push the button to begin,
2. After the “Listening” prompt and the following beep, say “Dial 151 1234 5555,”
3. The Uconnect® Phone will dial the number 151-1234-5555.

Call By Saying A Phonebook Name

1. Push the “Phone” button on your steering wheel to begin.
2. After the “Listening” prompt and the following beep, say “Call John Doe Mobile.”

3. The Uconnect® Phone will dial the number associated with John Doe, or if there are multiple numbers it will ask which number you want to call for John Doe.

Call Controls

The touchscreen allows you to control the following call features:

- Answer
- End
- Ignore
- Hold/unhold
- Mute/unmute
- Transfer the call to/from the phone
- Swap two active calls
- Join two active calls together

Touch-Tone Number Entry

1. Press the "Phone" button on the touchscreen.
2. Press the "Dial" button on the touchscreen.
3. The Touch-Tone screen will be displayed.
4. Use the numbered buttons on the touchscreens to enter the number and press "Call."

To send a touch-tone using Voice Recognition (VR), push the "VR" button on your steering wheel while in a call and say "Send 1234#" or you can say "Send Voicemail Password" if Voicemail password is stored in your mobile phonebook.

Recent Calls

You may browse up to 34 of the most recent of each of the following call types:

Recent Calls

- Incoming Calls
- Outgoing Calls
- Missed Calls
- All Calls

These can be accessed by pressing the "recent calls" button on the touchscreen on the Phone main screen.

You can also push the button and say "Show my incoming calls" from any screen and the Incoming calls will be displayed.

You can also push the button and say "Show my recent calls" from any screen and the All calls screen will be displayed.

NOTE: Incoming can also be replaced with "Outgoing," "Recent" or "Missed."

Answer Or Ignore An Incoming Call — No Call Currently In Progress

When you receive a call on your mobile phone, the Uconnect® Phone will interrupt the vehicle audio system. Push the "Phone" button on the steering wheel to accept the call. You can also press the "answer" button on the touchscreen or press the caller ID box.

Answer Or Ignore An Incoming Call — Call Currently In Progress

If a call is currently in progress and you have another incoming call, you will hear the same network tones for call waiting that you normally hear when using your mobile phone. Push the "Phone" button on the steering wheel, or press the "answer" button on the touchscreen or caller ID box to place the current call on hold and answer the incoming call.

NOTE: The Uconnect® Phone compatible phones in the market today do not support rejecting an incoming call when another call is in progress. Therefore, the user can only answer an incoming call or ignore it.

Making A Second Call While Current Call Is In Progress

You can place a call on hold by pressing the "Hold" button on the Phone main screen, then dial a number from the dialpad, recent calls, SMS Inbox or from the phonebooks. To go back to the first call, refer to "Toggling Between Calls" in this section. To combine two calls, refer to "Join Calls" in this section.

Place/Retrieve A Call From Hold

During an active call, press the "Hold" button on the Phone main screen.

Toggling Between Calls

If two calls are in progress (one active and one on hold), press the "Swap" button on the Phone main screen. Only one call can be placed on hold at a time.

You can also press the "Phone" button to toggle between the active and held phone call.

Join Calls

When two calls are in progress (one active and one on hold), press the "Join Calls" button on the Phone main screen to combine all calls into a Conference Call.

Call Termination

To end a call in progress, momentarily press the "Phone" button or the "end" button on the touchscreen. Only the active call(s) will be terminated and if there is a call on hold, it will become the new active call.

Redial

Press the "Redial" button on the touchscreen, or push the "Phone" button and after the "Listening" prompt and the following beep, say "Redial."

The Uconnect® Phone will call the last number that was dialed from your mobile phone.

Call Continuation

Call continuation is the progression of a phone call on the Uconnect® Phone after the vehicle ignition key has been switched to OFF.

NOTE: The call will remain within the vehicle audio system until the phone becomes out of range for the Bluetooth® connection. It is recommended to press the "transfer" button on the touchscreen when leaving the vehicle.

Uconnect® Phone Features

Emergency Assistance

If you are in an emergency and the mobile phone is reachable:

- Pick up the phone and manually dial the emergency number for your area.

If the phone is not reachable and the Uconnect® Phone is operational, you may reach the emergency number as follows:

1. Push the button to begin.

2. After the "Listening" prompt and the following beep, say "Dial Emergency" and the Uconnect® Phone will instruct the paired mobile phone to call the emergency number. This feature is supported in the U.S., Canada, and Mexico.

NOTE:

- The Emergency call may also be initiated by using the touchscreen.
- The emergency number dialed is based on the country where the vehicle is purchased (911 for the U.S. and Canada and 060 for Mexico). The number dialed may not be applicable with the available mobile service and area.
- The Uconnect® Phone does slightly lower your chances of successfully making a phone call as to that for the mobile phone directly.

WARNING!

Your phone must be turned on and connected to the Uconnect® Phone to allow use of this vehicle feature in emergency situations, when the mobile phone has network coverage and stays connected to the Uconnect® Phone.

Roadside Assistance/Towing Assistance

If you need roadside/towing assistance:

1. Push the button to begin.
2. After the "Listening" prompt and the following beep, say "Roadside Assistance" or say "Towing Assistance."

NOTE: The roadside/towing assistance number dialed is based on the country where the vehicle is purchased (1-800-521-2779 for the U.S./Canada, 55-14-3454 for Mexico City and 1-800-712-3040 for outside Mexico City in Mexico). Please refer to the Chrysler Group LLC 24-Hour "Roadside Assistance" coverage details in the Warranty Information Booklet and in the Owner's Information Manual on the DVD under "Other References."

Voice Mail Calling

To learn how to access your voice mail, refer to "Working with Automated Systems."

Working With Automated Systems

This method is used in instances where one generally has to press numbers on the mobile phone keypad while navigating through an automated telephone system.

You can use your Uconnect® Phone to access a voice mail system or an automated service, such as a paging service or automated customer service line. Some services require immediate response selection. In some instances, that may be too quick for use of the Uconnect® Phone.

When calling a number with your Uconnect® Phone that normally requires you to enter in a touch-tone sequence on your mobile phone keypad, you can utilize the touchscreen or push the VR button and say the word "Send" then the sequence you wish to enter. For example, if required to enter your PIN followed with a pound, (3 7 4 6 #), you can push the VR button and say, "Send 3 7 4 6 #." Saying "Send" followed by a number, or sequence of numbers, is also to be used for navigating through an automated customer service center menu structure, and to leave a number on a pager.

You can also send stored mobile phonebook entries as tones for fast and easy access to voice mail and pager

entries. For example, if you previously created a Phonebook entry with First and/or Last Name as "Voicemail Password", then if you push the VR button and say "Send Voicemail Password" the Uconnect® Phone will then send the corresponding phone number associated with the phonebook entry, as tones over the phone.

NOTE:

- The first number encountered for that contact will be sent. All other numbers entered for that contact will be ignored.
- You may not hear all of the tones due to mobile phone network configurations. This is normal.
- Some paging and voice mail systems have system time out settings that are too short and may not allow the use of this feature.
- Pauses, wait or other characters that are supported by some phones are not supported over Bluetooth®. These additional symbols will be ignored in the dialing a numbered sequence.

Barge In — Overriding Prompts

The VR button can be used when you wish to skip part of a prompt and issue your voice command immediately. For example, if a prompt is asking "There are two numbers with the name John. Say the full name" you could push the VR button and say, "John Smith" to select that option without having to listen to the rest of the voice prompt.

Voice Response Length

It is possible for you to choose between Brief and Detailed Voice Response Length.

1. Press the "More" button on the touchscreen (where available), then press the "Settings" button on the touchscreen.
2. Press the "Display" button on the touchscreen, then scroll down to Voice Response Length.
3. Select either "Brief" or "Detailed" by pressing the box next to the selection. A check-mark will appear to indicate your selection.

Phone And Network Status Indicators

Uconnect® Phone will provide notification to inform you of your phone and network status when you are attempting to make a phone call using Uconnect® Phone. The status is given for network signal strength and phone battery strength.

Dialing Using The Mobile Phone Keypad

WARNING!

Driving while distracted can result in loss of vehicle control, accident and injury. It is strongly recommended that you use extreme caution when using any device or feature that may take your focus off the road or your hands off the steering wheel. Your primary responsibility is the safe operation of your vehicle. We recommend against the use of any hand-held device while driving, encourage the use of voice-operated systems when possible and that you become aware of applicable laws that may affect the use of electronic devices while driving.

You can dial a phone number with your mobile phone keypad and still use the Uconnect® Phone (while dialing via the mobile phone keypad, the user must exercise caution and take precautionary safety measures). By

dialing a number with your connected Bluetooth® mobile phone, the audio will be played through your vehicle's audio system. The Uconnect® Phone will work the same as if you dial the number using voice a command.

NOTE: Certain brands of mobile phones do not send the dial ring to the Uconnect® Phone to play it on the vehicle audio system, so you will not hear it. Under this situation, after successfully dialing a number the user may feel that the call did not go through even though the call is in progress. Once your call is answered, you will hear the audio.

Mute/Un-Mute (Mute ON/OFF)

When you mute the Uconnect® Phone, you will still be able to hear the conversation coming from the other party, but the other party will not be able to hear you. To mute the Uconnect® Phone simply press the "Mute" button on the Phone main screen.

Advanced Phone Connectivity

Transfer Call To And From Mobile Phone

The Uconnect® Phone allows ongoing calls to be transferred from your mobile phone to the Uconnect® Phone without terminating the call. To transfer an ongoing call from your connected mobile phone to the Uconnect® Phone or vice versa, press the "Transfer" button on the Phone main screen.

Connect Or Disconnect Link Between The Uconnect® Phone And Mobile Phone

If you would like to connect or disconnect the Bluetooth® connection between a Uconnect® Phone paired mobile phone and the Uconnect® Phone, follow the instructions described in your mobile phone User's Manual.

Things You Should Know About Your Uconnect® Phone

Voice Command

- For best performance, adjust the rearview mirror to provide at least ½ inch (1 cm) gap between the overhead console (if equipped) and the mirror.
- Always wait for the beep before speaking.
- Speak normally, without pausing, just as you would speak to a person sitting a few feet/meters away from you.
- Ensure that no one other than you is speaking during a voice command period.

Performance is maximized under:

- Low-To-Medium Blower Setting
- Low-To-Medium Vehicle Speed
- Low Road Noise
- Smooth Road Surface
- Fully Closed Windows
- Dry Weather Condition

Even though the system is designed for many languages and accents, the system may not always work for some. When navigating through an automated system such as voice mail, or when sending a page, before speaking the digit string, make sure to say “Send.”

NOTE: It is recommended that you do not store names in your favorites phonebook while the vehicle is in motion.

Phonebook (Mobile and Favorites) name recognition rate is optimized when the entries are not similar. You can say “O” (letter “O”) for “0” (zero).

Even though international dialing for most number combinations is supported, some shortcut dialing number combinations may not be supported.

Far End Audio Performance

Audio quality is maximized under:

- Low-To-Medium Blower Setting
- Low-To-Medium Vehicle Speed
- Low Road Noise
- Smooth Road Surface
- Fully Closed Windows
- Dry Weather Conditions
- Operation From The Driver's Seat

Performance such as audio clarity, echo, and loudness to a large degree rely on the phone and network, and not the Uconnect® Phone.

Echo at the far end can sometimes be reduced by lowering the in-vehicle audio volume.

In a convertible vehicle, system performance may be compromised with the convertible top down.

Voice Text Reply

Uconnect® Phone can read or send new messages on your phone.

Your phone must support SMS over Bluetooth® to use this feature. If the Uconnect® Phone determines your phone is not compatible with SMS messaging over Bluetooth® the "Messaging" button will be grayed out and the feature will not be available for use.

Voice Text List

NOTE: Uconnect® Phone SMS is only available when the vehicle is not moving.

Read Messages:

If you receive a new text message while your phone is connected to Uconnect® Phone, an announcement will be made to notify you that you have a new text message.

Voice Text Reply

3

Once a message is received and viewed or listened to, you will have the following options:

- Send a Reply
- Forward
- Call

Send Messages Using Buttons On The Touchscreen:

You can send messages using Uconnect® Phone. To send a new message:

1. Press the "Phone" button on the touchscreen.
2. Press the "messaging" button on the touchscreen then "New Message."
3. Press one of the 18 preset messages and the person you wish to send the message to.

Preset Message List

4. If multiple numbers are available for the contact select which number you would like to have the message sent.
5. Press "Send" or "Cancel."

Send Messages Using Voice Commands:

1. Push the button.
2. After the "Listening" prompt and the following beep, say "Send message to John Smith mobile."
3. After the system prompts you for what message you want to send, say the message you wish to send or say "List." There are 18 preset messages.

While the list of defined messages are being read, you can interrupt the system by pushing the VR button and saying the message you want to send.

After the system confirms that you want to send your message to John Smith, your message will be sent.

Preset Message List

List of Preset Messages:

1. Yes.
2. No.
3. Okay.

4. I can't talk right now.
5. Call me.
6. I'll call you later.
7. I'm on my way.
8. Thanks.
9. I'll be late.
10. I will be <number> minutes late.
11. See you in <number> minutes.
12. Stuck in traffic.
13. Start without me.
14. Where are you?
15. Are you there yet?
16. I need directions.
17. I'm lost.
18. See you later.

Bluetooth® Communication Link

Mobile phones have been found to lose connection to the Uconnect® Phone. When this happens, the connection can generally be re-established by switching the mobile phone OFF/ON. Your mobile phone is recommended to remain in Bluetooth® ON mode.

Power-Up

After switching the ignition key from OFF to either the ON or ACC position, or after a language change, you must wait at least 15 seconds prior to using the system.

Voice Tree

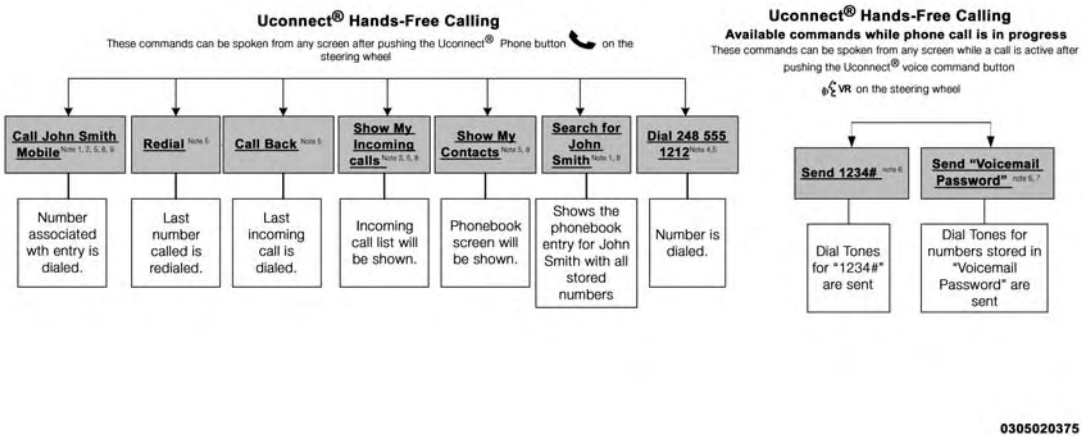
Uconnect® Hands-Free Calling
These commands can be spoken from any screen after pushing the Uconnect® Phone button on the steering wheel
Call John Smith Mobile Note 1, 2, 5, 8, 9
Redial Note 5
Call Back Note 5
Show My Incoming calls Note 3, 5, 8
Show My Contacts Note 5, 8
Search for John Smith Note 1, 8
Dial 248 555 1212 Note 4,5
Number associated wth entry is dialed.
Last number called is redialed.
Last incoming call is dialed.
Incoming call list will be shown.
Phonebook screen will be shown.
Shows the phonebook entry for John Smith with all stored numbers
Number is dialed.
Uconnect® Hands-Free Calling
Available commands while phone call is in progress
These commands can be spoken from any screen while a call is active after pushing the Uconnect® voice command button
VR on the steering wheel
Send 1234# Note 6
Send "Voicemail Password" Note 6, 7
Dial Tones for "1234#" are sent
Dial Tones for numbers stored in "Voicemail Password" are sent
0305020375

NOTE:

1. You can replace “John Smith” with any name in your mobile or favorite phone book. You can also say “Send a message to John Smith” and the system will ask you which phone number you want to send a message to for John Smith.
2. You can replace “Mobile” with “Home,” “Work” or “Other.”
3. You can replace “Incoming Calls” with “Outgoing Calls” or “Missed Calls.”
4. You can replace “248 555 1212” with any phone number supported by your Mobile phone.
5. These commands can be used during a phone call after pushing the Uconnect® Voice Command button on the steering wheel. Please note the call will be muted while the VR session is active.
6. Send dial tones for automated systems is available while a call is active. This is an example that uses a Phonebook Record named “Voicemail Password.”
7. Storing Dial tones in contact names is possible but only the first number encountered in a contact name will be sent. For example if there is a number stored in the Home and Work numbers for the contact “Voicemail password” only the Home number will be sent.
8. If your phone does not support phonebook download or call log download over Bluetooth® then these commands will return a response that the contact does not exist in the phonebook.

9. Emergency and Towing assistance are contacts that have been pre-loaded in the phonebook. Commands such as “Call Emergency” and “Call Towing Assistance” will call the corresponding number stored with those contacts.

NOTE: Available Voice Commands are shown in bold face and underlined in the gray shaded boxes.

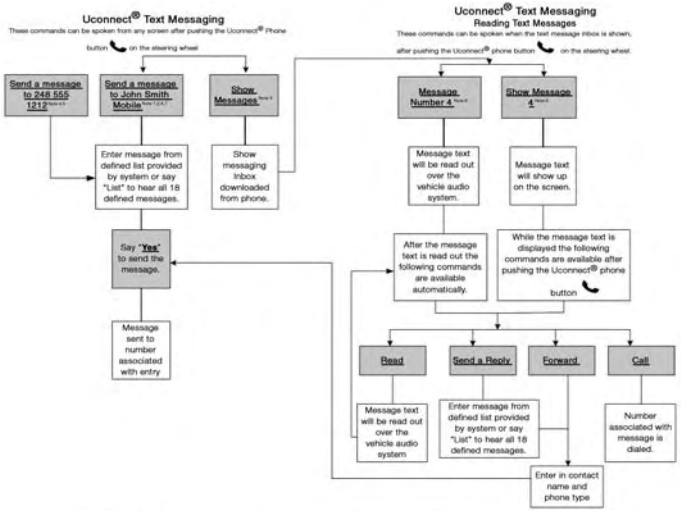

Note: Available Voice Commands are shown in bold face and are underlined in the shaded boxes

0475016870

NOTE:

1. You can replace “John Smith” with any name in your mobile or favorite phone book. You can also say “Send a message to John Smith” and the system will ask you which phone number you want to send a message to for John Smith.
2. You can replace “Mobile” with “Home,” “Work” or “Other.”
3. You can replace “Incoming Calls” with “Outgoing Calls” or “Missed Calls.”
4. Messaging commands only work if the Uconnect® system is equipped with this feature and the mobile phone supports messaging over Bluetooth®.
5. You can replace “248 555 1212” with any phone number supported by your Mobile phone.
6. You can replace “4” with any message number shown on the screen.
7. If your phone does not support phonebook download or call log download over Bluetooth® then these commands will return a response that the contact does not exist in the phonebook.

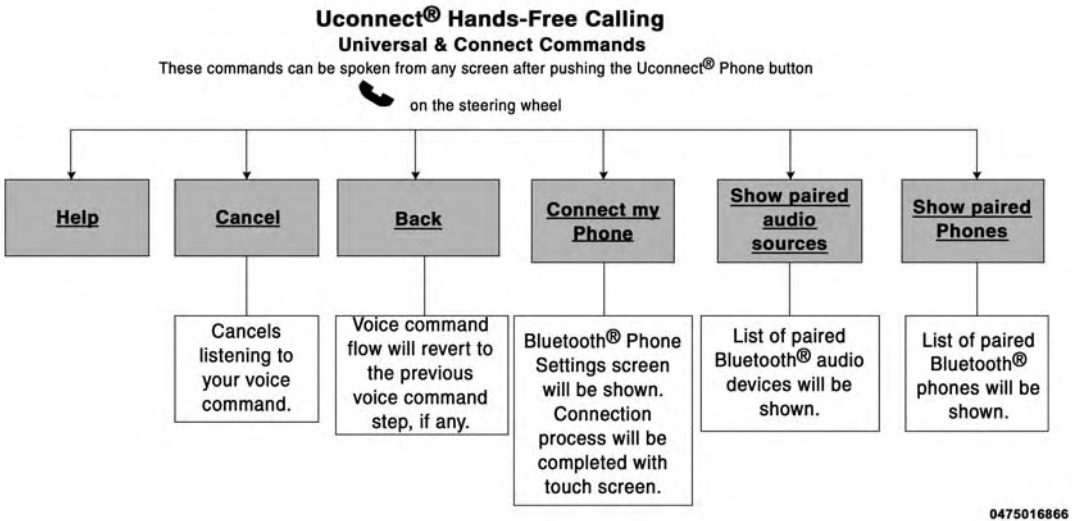
Uconnect® Hands-Free Calling
Universal & Connect Commands
These commands can be spoken from any screen after pushing the Uconnect® Phone button
on the steering wheel
Help
Cancel
Back
Connect my Phone
Show paired audio sources
Show paired Phones
Cancels listening to your voice command.
Voice command flow will revert to the previous voice command step, if any.
Bluetooth® Phone Settings screen will be shown. Connection process will be completed with touch screen.
List of paired Bluetooth® audio devices will be shown.
List of paired Bluetooth® phones will be shown.
0475016866

NOTE: Available Voice Commands are shown in bold face and underlined in the gray shaded boxes.

General Information

This device complies with Part 15 of the FCC rules and RSS 210 of Industry Canada. Operation is subject to the following conditions:

- Changes or modifications not expressly approved by the party responsible for compliance could void the user's authority to operate the equipment.
- This device may not cause harmful interference.
- This device must accept any interference received, including interference that may cause undesired operation.

VOICE COMMAND

Uconnect® 8.4/8.4 Nav

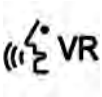

The Uconnect® Voice Command system allows you to control your AM, FM radio, satellite radio, disc player, SD Card, USB/iPod® and SiriusXM Travel Link.

NOTE: Take care to speak into the Voice Command system as calmly and normally as possible. The ability of the Voice Command system to recognize user voice commands may be negatively affected by rapid speaking or a raised voice level.

WARNING!
Any voice commanded system should be used only in safe driving conditions following all applicable

(Continued)

WARNING! ***(Continued)***

laws, including laws regarding phone use. Your attention should be focused on safely operating the vehicle. Failure to do so may result in a collision causing serious injury or death.

When you push the Uconnect® Voice Command VR button, you will hear a beep. The beep is your signal to give a command.

If no command is spoken the system will say one of two responses:

- I didn't understand
- I didn't get that, etc.

If a command is not spoken a second time, the system will respond with an error and give some direction as what can be said based on the context you are in. After three consecutive failures of a spoken command the VR session will end.

Pushing the Uconnect® Voice Command VR button while the system is speaking is known as "barging in." The system will be interrupted, and after the beep, you can say a command. This will become helpful once you start to learn the options.

NOTE: At any time, you can say the words "Cancel" or "Help."

These commands are universal and can be used from any menu. All other commands can be used depending upon the active application.

When using this system, you should speak clearly and at a normal speaking volume.

The system will best recognize your speech if the windows are closed, and the heater/air conditioning fan is set to low.

At any point, if the system does not recognize one of your commands, you will be prompted to repeat it.

To hear available commands, push the Uconnect® Voice Command VR button and say "Help." You will hear available commands for the screen displayed.

Natural Speech

Natural speech allows the user to speak commands in phrases or complete sentences. The system filters out certain non-word utterances and sounds such as "ah" and "eh." The system handles fill-in words such as "I would like to."

The system handles multiple inputs in the same phrase or sentence such as "make a phone call" and "to Kelly Smith." For multiple inputs in the same phrase or sentence, the system identifies the topic or context and provides the associated follow-up prompt such as "Who do you want to call?" in the case where a phone call was requested but the specific name was not recognized.

The system utilizes continuous dialog; when the system requires more information from the user it will ask a question to which the user can respond without pressing the Uconnect® Voice Command VR button.

Uconnect® Voice Commands

The Uconnect® Voice Command system understands two types of commands. Universal commands are available at all times. Local commands are available if the supported radio mode is active.

Start a dialogue by pushing the Uconnect® Voice Command VR button.

Changing The Volume

1. Start a dialogue by pushing the Voice Command VR button.
2. Say a command (e.g., “Help”).
3. Use the ON/OFF VOLUME rotary knob to adjust the volume to a comfortable level while the Voice Command system is speaking. Please note the volume setting for Voice Command is different than the audio system.

Starting Voice Recognition (VR) Session In Radio/Player Modes

In this mode, you can say the following commands:

NOTE: The commands can be said on any screen when a call is not active after pushing the Uconnect® Voice Command VR button.

Source

To switch to the audio source, say "Change source to Disc" for example. This command can be given in any mode or screen:

- "Track" (#) (to change the track)

Voice Tree

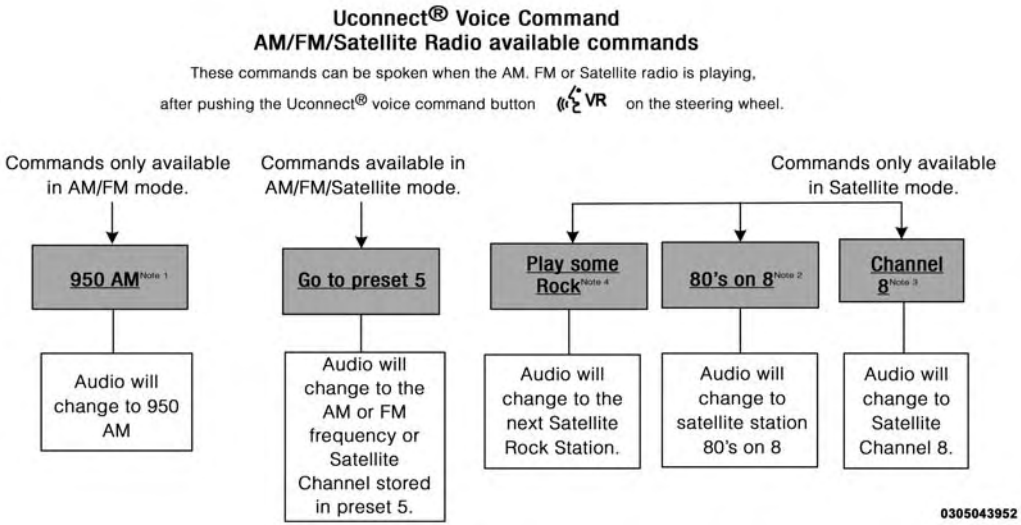
Uconnect® Voice Command
AM/FM/Satellite Radio available commands
These commands can be spoken when the AM. FM or Satellite radio is playing,
after pushing the Uconnect® voice command button VR on the steering wheel.
Commands only available in AM/FM mode.
Commands available in AM/FM/Satellite mode.
Commands only available in Satellite mode.
950 AM Note 1
Go to preset 5
Play some Rock Note 4
80's on 8 Note 2
Channel 8 Note 3
Audio will change to 950 AM
Audio will change to the AM or FM frequency or Satellite Channel stored in preset 5.
Audio will change to the next Satellite Rock Station.
Audio will change to satellite station 80's on 8
Audio will change to Satellite Channel 8.
0305043952

NOTE:

- You can replace “950 AM” with any other AM or FM frequency, such as “98.7 FM.”
- You can replace “80’s on 8” with any other satellite station name received by the radio.
- You can replace “8” with any other satellite channel number received by the radio.
- You can replace “rock” with any of the satellite music types.

NOTE: Available Voice Commands are shown in bold face and shaded grey.

Uconnect® Hands-Free Music Control

These commands can be spoken when playing music from your SD card, USB device, CD or iPod, after pushing the Uconnect® voice commands button VR on the steering wheel.

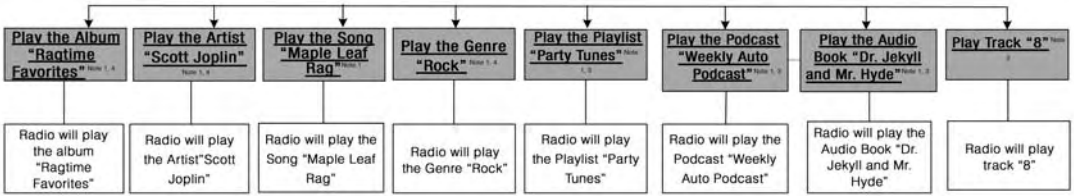

0475016865

NOTE:

- You can replace the album, artist, song, genre, playlist, podcast and audio book names with any corresponding names on the current device that is playing.
- You can replace “8” with any track on the CD that is currently playing. Command is only available when CD is playing.
- Playlist, Podcast and audio book commands are only available when the iPod® is connected and playing.
- VR commands, Albums, Artists, and Genre names are based on the music metadata contained on the loaded/connected device.

NOTE: Available Voice Commands are shown in bold face and shaded grey.

Uconnect® Voice Command
Travel Link commands

These commands can be said on any screen when a call is not active after pushing the Uconnect® voice command button VR on the steering wheel.

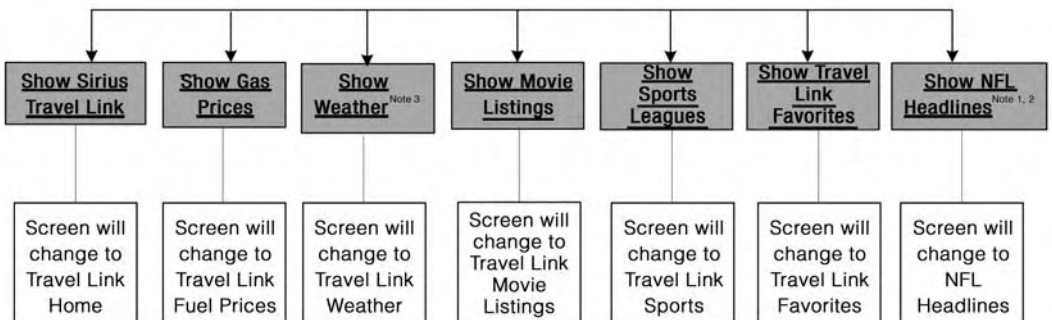

0475016864

NOTE:

- You can replace “NFL” with any league shown on the sports league screen. For example you can say “Show MLB headlines” or “Show PGA headlines.”
- You can replace “Headlines” with any menu items shown on a league screen. For example you can say “Show NFL Schedule and results” or “Show NCAA Basketball AP top 25” or “Show Major League Baseball Teams.”
- You can also say “Show Current Weather” or “Show extended weather” or “Show five day forecast” or “Show ski info” to get other forecasts.

NOTE: Available Voice Commands are shown in bold face and shaded grey.

Uconnect® Voice Command
Non-phone - Universal & Mode Commads

These commands can be spoken on any screen when not on a phone call,

after pushing the Uconnect® voice command button VR on the steering wheel.

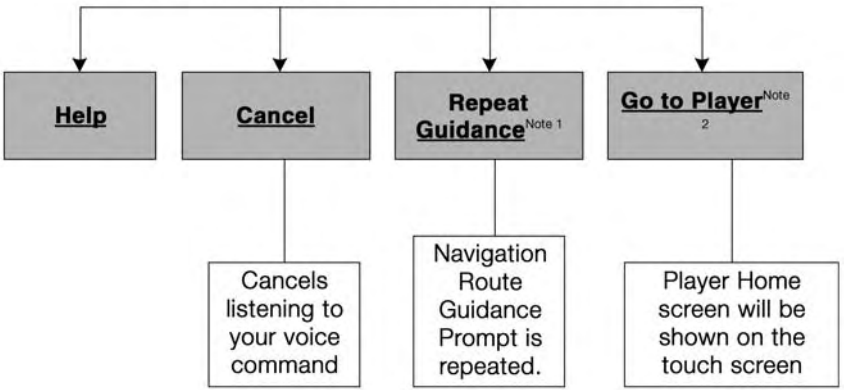

0475016869

NOTE:

- Only available with Navigation equipped vehicles.
- You can replace “Player” with “Radio,” “Navigation,” “Phone,” “Climate,” “More” or “Settings.”
- Navigation commands only work if equipped with Navigation.

NOTE: Available Voice Commands are shown in bold face and shaded grey.

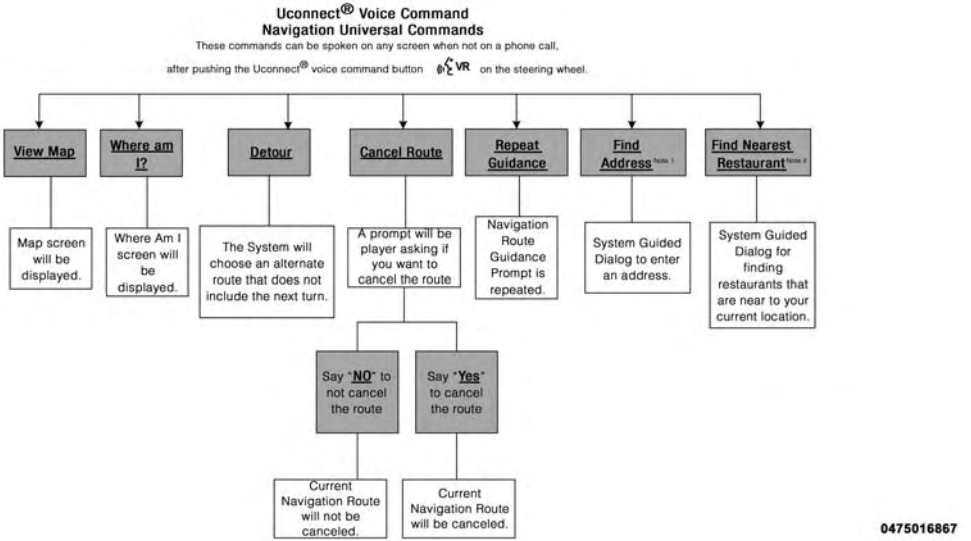
Uconnect® Voice Command
Navigation Universal Commands
These commands can be spoken on any screen when not on a phone call,
after pushing the Uconnect® voice command button VR on the steering wheel.
View Map
Where am I?
Detour
Cancel Route
Repeat Guidance
Find Address
Find Nearest Restaurant
Map screen will be displayed.
Where Am I screen will be displayed.
The System will choose an alternate route that does not include the next turn.
A prompt will be player asking if you want to cancel the route
Navigation Route Guidance Prompt is repeated.
System Guided Dialog to enter an address.
System Guided Dialog for finding restaurants that are near to your current location.
Say "NO" to not cancel the route
Say "Yes" to cancel the route
Current Navigation Route will not be canceled.
Current Navigation Route will be canceled.
0475016867

NOTE:

- You can also say "Find City," "Find Favorite," "Find Play by Category," "Find Play by Name," "Find Recently Found," "Where to?" or "Go Home."
- You can say "Find Nearest" then "Restaurant," "Fuel," "Transit," "Lodging," "Shopping," "Bank," "Entertainment," "Recreation," "Attractions," "Community," "Auto Services," "Hospitals," "Parking," "Airport," "Police Stations," "Fire Stations," or "Auto Dealers."

NOTE: Available Voice Commands are shown in bold face and shaded grey.

SEATS

Seats are a part of the Occupant Restraint System of the vehicle.

WARNING!

- **It is dangerous to ride in a cargo area, inside or outside of a vehicle. In a collision, people riding in these areas are more likely to be seriously injured or killed.**
- **Do not allow people to ride in any area of your vehicle that is not equipped with seats and seat belts. In a collision, people riding in these areas are more likely to be seriously injured or killed.**
- **Be sure everyone in your vehicle is in a seat and using a seat belt properly.**

Driver's Power Seat — If Equipped

The power seat switch is on the outboard side of the seat near the floor. Use this switch to move the seat up, down, forward, rearward or to tilt the seat.

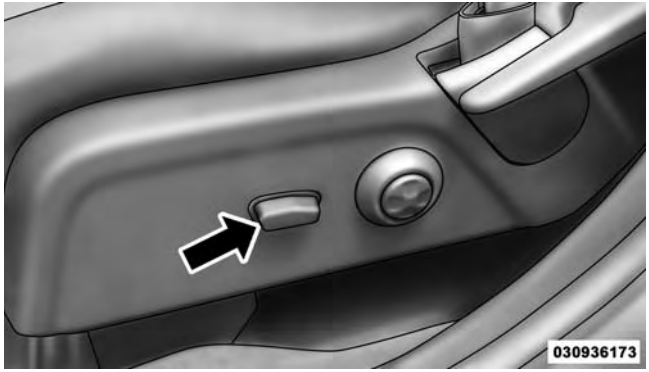

Power Seat Switch

Adjusting The Seat Forward Or Rearward

The seat can be adjusted both forward and rearward. Push the seat switch forward or rearward, the seat will move in the direction of the switch. Release the switch when the desired position has been reached.

Adjusting The Seat Up Or Down

The height of the seats can be adjusted up or down. Pull upward or push downward on the seat switch, the seat will move in the direction of the switch. Release the switch when the desired position is reached.

Tilting The Seat Up Or Down

The angle of the seat cushion can be adjusted in four directions. Pull upward or push downward on the front or rear of the seat switch; the front or rear of the seat cushion will move in the direction of the switch. Release the switch when the desired position is reached.

WARNING!

- **Adjusting a seat while driving may be dangerous. Moving a seat while driving could result in loss of control which could cause a collision and serious injury or death.**
- **Seats should be adjusted before fastening the seat belts and while the vehicle is parked. Serious injury or death could result from a poorly adjusted seat belt.**
- **Do not ride with the seatback reclined so that the shoulder belt is no longer resting against your chest. In a collision you could slide under the seat belt, which could result in serious injury or death.**

CAUTION!

Do not place any article under a power seat or impede its ability to move as it may cause damage to the seat controls. Seat travel may become limited if movement is stopped by an obstruction in the seat's path.

Power Lumbar — If Equipped

The Power Lumbar switch is located on the outboard side of the driver's seat. Push the switch forward to increase the lumbar support. Push the switch rearward to decrease the lumbar support. Pushing upward or downward on the switch will raise or lower the position of the support.

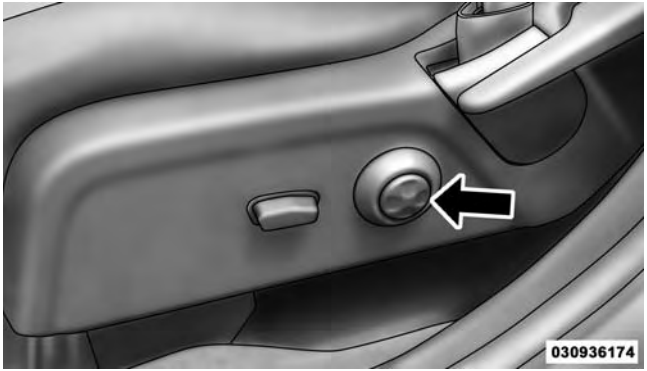

Power Lumbar Switch

Front Heated Seats — If Equipped

The front heated seats control buttons are located within the Uconnect® system. You can gain access to the control buttons through the climate screen or the controls screen.

- Press the heated seat button once to turn the High setting ON.
- Press the heated seat button a second time to turn the Low setting ON.
- Press the heated seat button a third time to turn the heating elements OFF.

When the HI-level setting is selected, the heater will provide a boosted heat level during the first four minutes of operation. Then, the heat output will drop to the normal HI-level. If the HI-level setting is selected, the system will automatically switch to LO-level after approximately 60 minutes of continuous operation. At that time, the display will change from HI to LO, indicating the change. The LO-level setting will turn OFF automatically after approximately 45 minutes.

NOTE: The engine must be running for the heated seats to operate.

Vehicles Equipped With Remote Start

On models that are equipped with remote start, the heated seats can be programed to come on during a remote start.

This feature can be programmed through the Uconnect® system. Refer to “Uconnect® Settings” in “Understanding Your Instrument Panel” for further information.

WARNING!

- **Persons who are unable to feel pain to the skin because of advanced age, chronic illness, diabetes, spinal cord injury, medication, alcohol use, exhaustion or other physical condition must exercise care when using the seat heater. It may cause burns even at low temperatures, especially if used for long periods of time.**
- **Do not place anything on the seat or seatback that insulates against heat, such as a blanket or cushion. This may cause the seat heater to overheat. Sitting in a seat that has been overheated could cause serious burns due to the increased surface temperature of the seat.**

Manual Front Seat Adjustments

For models equipped with manual seats, the driver and passenger seats can be adjusted forward or rearward by using a bar located by the front of the seat cushion, near the floor.

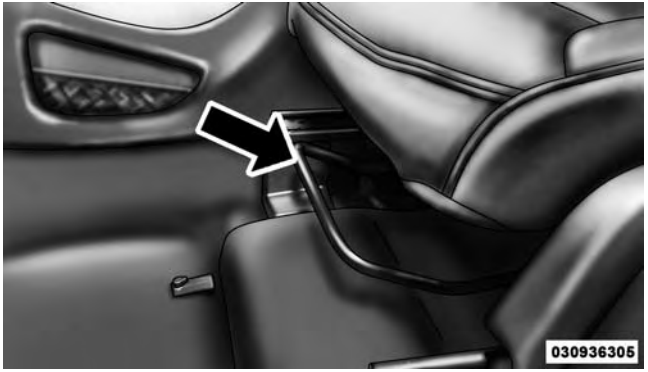

Manual Seat Adjustment

While sitting in the seat, lift up on the bar located and move the seat forward or rearward. Release the bar once the desired position has been reached. Then, using body pressure, move forward and rearward on the seat to be sure that the seat adjusters have latched.

WARNING!

- **Adjusting a seat while driving may be dangerous. Moving a seat while driving could result in loss of control which could cause a collision and serious injury or death.**
- **Seats should be adjusted before fastening the seat belts and while the vehicle is parked. Serious injury or death could result from a poorly adjusted seat belt.**

Recliner Adjustment

The recline lever is located on the outboard side of the seat. To recline the seat, lean forward slightly, lift the lever, lean back to the desired position and release the lever. To return the seatback to its normal upright position, lean forward and lift the lever. Release the lever once the seatback is in the upright position.

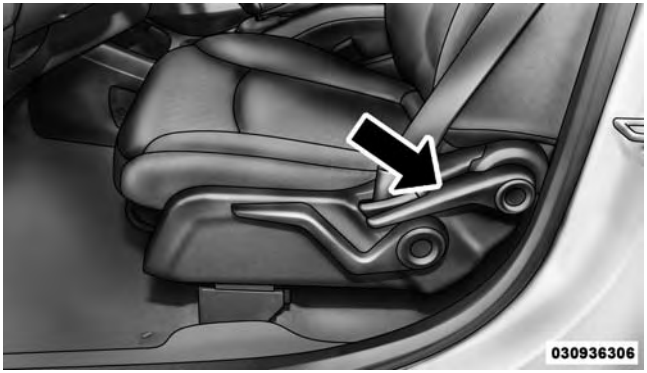

Seatback Release

WARNING!

- **Adjusting a seat while the vehicle is moving is dangerous. The sudden movement of the seat could cause you to lose control. The seat belt might not be adjusted properly and you could be injured. Adjust the seat only while the vehicle is parked.**
- **Do not ride with the seatback reclined so that the shoulder belt is no longer resting against your chest. In a collision you could slide under the seat belt and be seriously or even fatally injured. Use the recliner only when the vehicle is parked.**

Driver's Seat Height Adjustment — If Equipped

The seat height control lever is located on the outboard side of the seat. Raise the lever to raise the seat. Lower the lever to lower the seat. The total seat travel is approximately 2.15 in (55 mm).

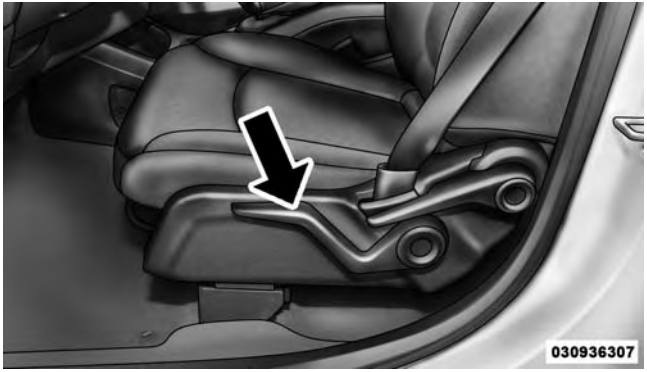

Seat Height Adjustment Lever

Fold-Flat Front Passenger Seat — If Equipped

This feature allows for extended cargo space. When the seat is folded flat, it is an extension of the load floor surface (allowing long cargo to fit from the rear hatch up to the instrument panel). The fold-flat seatback also has a hardback surface that you can use as a work surface when the seat is folded flat and the vehicle is not in motion.

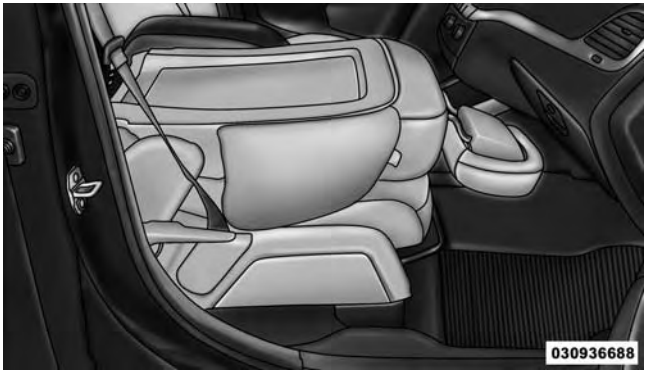

Fold-Flat Seat

Pull upward on the recline lever to fold or unfold the seat.

WARNING!

Adjusting a seat while the vehicle is moving is dangerous. The sudden movement of the seat could cause you to lose control. Adjust any seat only while the vehicle is parked.

Head Restraints

Head restraints are designed to reduce the risk of injury by restricting head movement in the event of a rear impact. Head restraints should be adjusted so that the top of the head restraint is located above the top of your ear.

WARNING!

The head restraints for all occupants must be properly adjusted prior to operating the vehicle or occupying a seat. Head restraints should never be adjusted while the vehicle is in motion. Driving a vehicle with the head restraints improperly adjusted or removed could cause serious injury or death in the event of a collision.

Active Head Restraints (AHR) — Front Seats

Active Head Restraints are passive, deployable components, and vehicles with this equipment can not be readily identified by any markings, only through visual inspection of the head restraint. The head restraint will be split in two halves, with the front half being soft foam and trim, the back half being decorative plastic.

When AHRs deploy during a rear impact, the front half of the head restraint extends forward to minimize the gap between the back of the occupant's head and the AHR. This system is designed to help prevent or reduce the extent of injuries to the driver and front passenger in certain types of rear impacts. Refer to "Occupant Restraints" in "Things To Know Before Starting" for further information.

To raise the head restraint, pull upward on the head restraint. To lower the head restraint, press the push button, located at the base of the head restraint, and push downward on the head restraint.

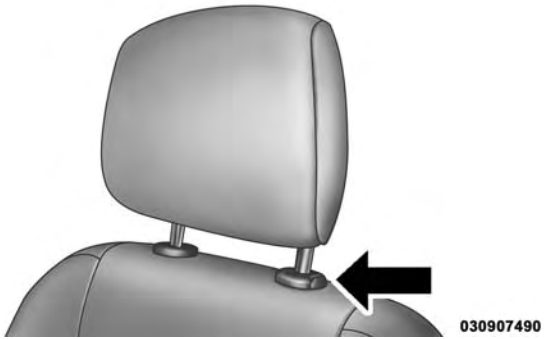

Push Button

For comfort, the Active Head Restraints can be tilted forward and backward. To tilt the head restraint closer to the back of your head, pull forward on the bottom of the head restraint. Push rearward on the bottom of the head restraint to move the head restraint away from your head.

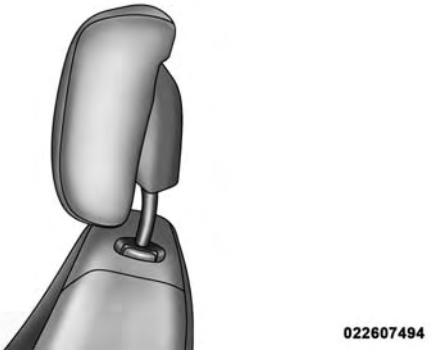

Active Head Restraint (Normal Position)

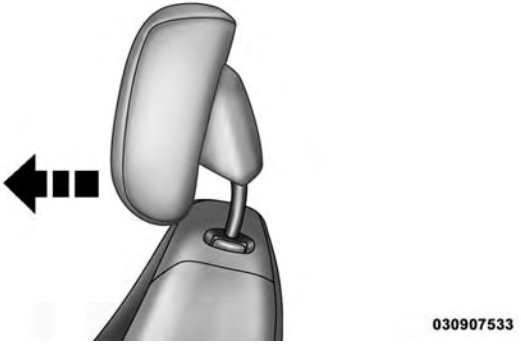

Active Head Restraint (Tilted)

NOTE:

- The head restraints should only be removed by qualified technicians, for service purposes only. If either of the head restraints require removal, see your authorized dealer.
- In the event of deployment of an Active Head Restraint, refer to "Occupant Restraints/Supplemental Active Head Restraints (AHR)/Resetting Active Head Restraints (AHR)" in "Things To Know Before Starting" for further information.

WARNING!

- **Do not place items over the top of the Active Head Restraint, such as coats, seat covers or portable DVD players. These items may interfere with the operation of the Active Head Restraint in the event of a collision and could result in serious injury or death.**
- **Active Head Restraints may be deployed if they are struck by an object such as a hand, foot or loose cargo. To avoid accidental deployment of the Active Head Restraint ensure that all cargo is secured, as loose cargo could contact the Active Head Restraint during sudden stops. Failure to follow this warning could cause personal injury if the Active Head Restraint is deployed.**

Head Restraints — Second Row Seats

The rear seats are equipped with adjustable head restraints. To raise the head restraint, pull upward on the head restraint. To lower the head restraint, press the adjustment button, located on the base of the head restraint, and push downward on the head restraint.

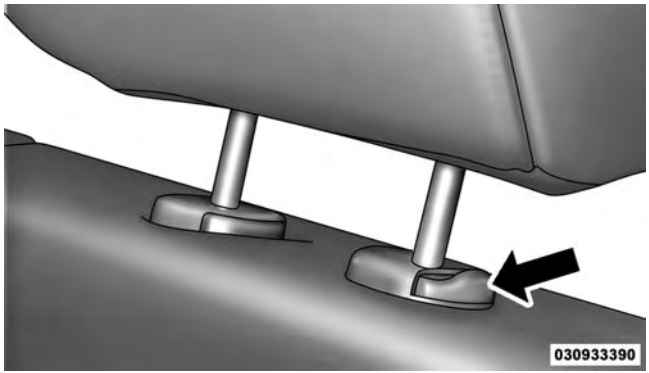

Adjustment Button

NOTE:

- The head restraints should only be removed by qualified technicians, for service purposes only. If any of the head restraints require removal, see your authorized dealer.
- For proper routing of a Child Seat Tether, refer to "Occupant Restraints" in "Things To Know Before Starting".

WARNING!

Driving a vehicle with the head restraints removed or improperly adjusted could cause serious injury or death in the event of a collision. The head restraints should be checked prior to operating the vehicle and never adjusted while the vehicle is in motion.

Third Row Passenger Seats — Seven Passenger Models

These head restraints are non-adjustable and non-removable. However, you can fold them forward when they are not in use by passengers. Refer to "50/50 Split Third-Row Passenger Seats With Fold-Flat Feature — Seven Passenger Models" for further information.

WARNING!

Do not allow a passenger to sit in a third row seat without having the head restraint unfolded and locked in place. Failure to follow this warning may result in personal injury to the passenger in the event of a collision.

60/40 Split Second-Row Passenger Seats

To provide additional storage area, each second-row passenger seat can be folded flat. This allows for extended cargo space and still maintains some seating room if needed.

NOTE: Prior to folding the second-row passenger seat, make sure the front seatback is not in a reclined position. This will allow the second-row seat to fold easily.

WARNING!

- **It is extremely dangerous to ride in a cargo area, inside or outside of a vehicle. In a collision, people riding in these areas are more likely to be seriously injured or killed.**

(Continued)

WARNING! ***(Continued)***

- **Do not allow people to ride in any area of your vehicle that is not equipped with seats and seat belts.**
- **Be sure everyone in your vehicle is in a seat and using a seat belt properly.**
- **On seven passenger models, do not allow a passenger to sit in a third row seat with the second row seatback(s) folded flat. In a collision, the passenger could slide underneath the seat belt and be seriously or even fatally injured.**

To Fold The Seat

1. Locate the control lever on the lower outboard side of the seat.

Seatback Release

2. Place one hand on the seatback and apply a gentle pressure.
3. Lift the control lever with the other hand, allow the seatback to move forward slightly, and then release the lever.

WARNING!

To prevent personal injury or damage to objects, keep your head, arms, and objects out of the folding path of the seatback.

4. Gently guide the seatback into the folded position.

To Unfold The Seat

Raise the seatback and lock it in place.

WARNING!

Be certain that the seatback is locked securely into position. Otherwise, the seat will not provide the proper stability for child seats and/or passengers. An improperly latched seat could cause serious injury.

Forward And Rearward Adjustment

The control lever is on the outboard side of the seat. Lift the lever to move the seat forward or rearward. Release the lever once the seat is in the desired position. Then, using body pressure, move forward and rearward on the seat to be sure that the seat adjusters have latched.

Manual Seat Adjustment

WARNING!

Adjusting a seat while the vehicle is moving is dangerous. The sudden movement of the seat could cause you to lose control. The seat belt might not be adjusted properly and you could be injured. Adjust any seat only while the vehicle is parked.

Recliner Adjustment

The recline lever is on the outboard side of the seat. To recline the seatback, lean back, lift the lever, position the seatback as desired, and then release the lever. To return the seatback to its normal upright position, lean back, lift the lever, lean forward, and then release the lever once the seatback is in the upright position.

Recline Lever

WARNING!

- **Adjusting a seat while the vehicle is moving is dangerous. The sudden movement of the seat could cause you to lose control. The seat belt might not be adjusted properly and you could be injured. Adjust the seat only while the vehicle is parked.**
- **Do not ride with the seatback reclined so that the shoulder belt is no longer resting against your chest. In a collision you could slide under the seat belt and be seriously or even fatally injured. Use the recliner only when the vehicle is parked.**

Seatback/Armrest — Second Row Passenger Seat

The latch release-loop is located at the top of the seatback/armrest. Pull the release-loop forward to release the latch and then downward to lower the seatback/armrest.

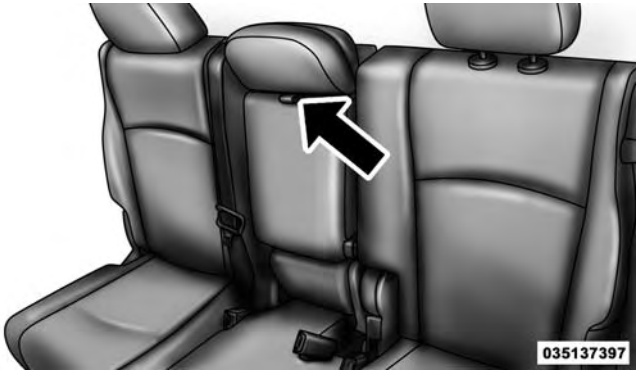

Seatback/Armrest

Raise the seatback/armrest and lock it in place when not in use, or when additional seating area is required.

WARNING!

Keep the latch clean and free of objects and be certain that the seatback/armrest is locked securely into position. Otherwise, the seat will not provide the proper stability for child seats and/or passengers. An improperly latched seat could cause serious injury.

Stadium Tip 'n Slide™ (Easy Entry/Exit Seat) — Seven Passenger Models

This feature allows passengers to easily enter or exit the third-row passenger seats from either side of the vehicle.

To Move The Second-Row Passenger Seat Forward

NOTE: Raise the seatback/armrest before moving the seat to allow for full seat travel.

Move the control lever on the upper outboard side of the seatback forward. Then, in one fluid motion, the seat cushion flips upward and the seat moves forward on its tracks.

Tip 'n Slide™ Control Lever

Tip 'n Slide™ Seat

NOTE: A hand-grip is molded into the front of each quarter trim panel near the door opening to assist entry and exit from the third-row passenger seats.

WARNING!

Do not drive the vehicle with the seat in this position, as it is only intended for entering and exiting the third row seats. Failure to follow this warning may result in personal injury.

To Unfold And Move The Second-Row Passenger Seat Rearward

Move the seatback rearward until it locks in place and then continue sliding the seat rearward on its tracks until it locks in place.

Push the seat cushion downward to lock it in place.

Adjust the seat track position as desired. Using body pressure, move forward and rearward on the seat to be sure that the seat adjusters have latched.

WARNING!

Be certain that the seatback and seat are locked securely into position. Otherwise, the seat will not provide the proper stability for child seats and/or passengers. An improperly latched seat could cause serious injury.

50/50 Split Third-Row Passenger Seats With Fold-Flat Feature — Seven Passenger Models

To provide additional storage area, each third-row passenger seatback can be folded flat. This allows for extended cargo space and still maintains some rear seating room if needed.

NOTE: Prior to folding the third-row passenger seatback, make sure the second-row passenger seatback is not in a reclined position. This will allow the seatback to fold easily.

To Fold The Seatback

Pull the latch release-loop located at the top of the seatback upward, push the seatback forward slightly, and release the release-loop. Then, continue to push the seatback forward. The head restraints will fold automatically as the seatback moves forward.

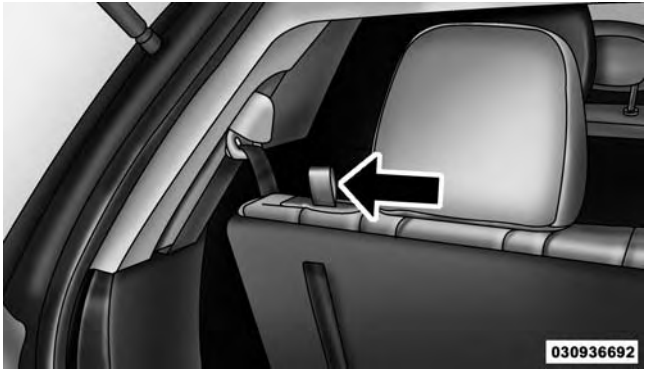

Seatback Release

To Unfold The Seatback

Grasp the assist strap loop on the seatback and pull it toward you to raise the seatback. Continue to raise the seatback until it locks in place. Raise the head restraint to lock it in place.

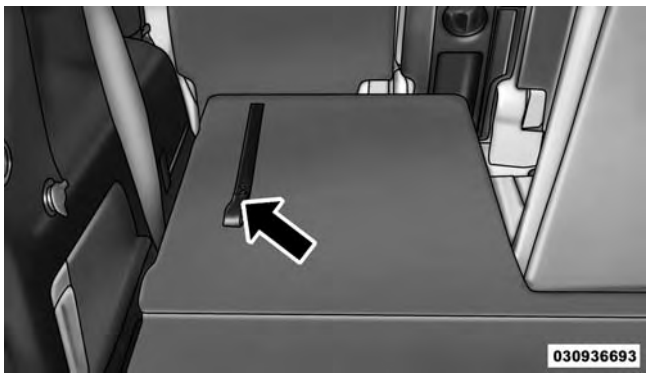

Assist Strap

The seatback can also be locked in the reclined position. To do so, pull the latch release-loop located at the top of the seatback upward, allow the seatback to recline, and release the release-loop.

WARNING!

- **Be certain that the seatback is locked securely into position. Otherwise, the seat will not provide the proper stability for passengers. An improperly latched seat could cause serious injury.**
- **Do not allow a passenger to sit in a third row seat without having the head restraint unfolded and locked in place. Failure to follow this warning may result in personal injury to the passenger in the event of a collision.**

(Continued)

WARNING! *(Continued)*

- **Do not allow a passenger to sit in a third row seat with the second row seatback(s) folded flat. In a collision, the passenger could slide underneath the seat belt and be seriously or even fatally injured.**

TO OPEN AND CLOSE THE HOOD

Two latches must be released to open the hood.

1. Pull the hood release lever located under the left side of the instrument panel.

Hood Release

2. Outside of the vehicle, locate the safety latch lever near the center of the grille between the grille and hood opening. Push the safety latch lever to the left and then raise the hood.

Underhood Safety Latch

3. Use the hood prop rod to secure the hood in the open position. Place the upper end of the prop rod in the hole on the underside of the hood.

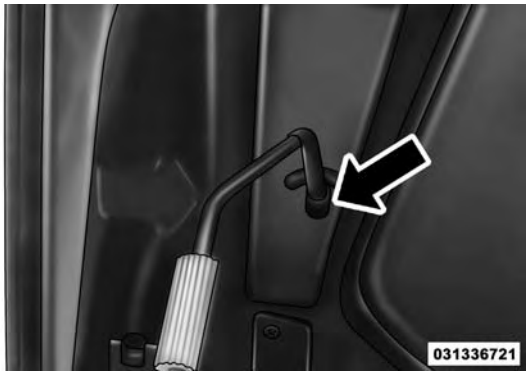

Hood Prop Rod

CAUTION!

To prevent possible damage:

- **Before closing hood, make sure the hood prop rod is fully seated into its storage retaining clips.**

(Continued)

CAUTION! *(Continued)*

- **Do not slam the hood to close it. Use a firm downward push at the center front edge of the hood to ensure that both latches engage. Never drive your vehicle unless the hood is fully closed, with both latches engaged.**

WARNING!

Be sure the hood is fully latched before driving your vehicle. If the hood is not fully latched, it could open when the vehicle is in motion and block your vision. Failure to follow this warning could result in serious injury or death.

LIGHTS

Headlight Switch

The headlight switch is located on the left side of the instrument panel. This switch controls the operation of the headlights, parking lights, instrument panel lights, instrument panel light dimming, interior lights and fog lights.

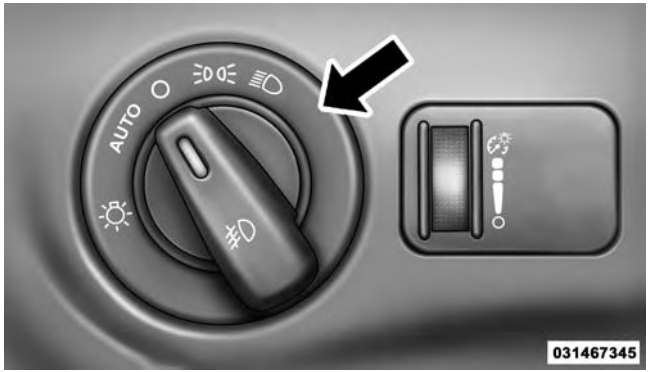

Headlight Switch

Rotate the headlight switch clockwise to the first detent for parking lights and instrument panel light operation. Rotate the headlight switch to the second detent for headlight, parking light and instrument panel light operation.

Automatic Headlights — If Equipped

This system automatically turns the headlights on or off according to ambient light levels. To turn the system on, rotate the headlight switch counterclockwise to the AUTO position. When the system is on, the headlight time delay feature is also on. This means the headlights will stay on for up to 90 seconds after you place the ignition into the OFF position. To turn the automatic system off, move the headlight switch out of the AUTO position.

NOTE: The engine must be running before the headlights will come on in the automatic mode.

Headlights On With Wipers (Available With Automatic Headlights Only)

When this feature is active, the headlights will turn on after the wipers are turned on if the headlight switch is placed in the AUTO position and programmable feature

is set to ON. In addition, the headlights will turn off when the wipers are turned off if they were turned on by this feature.

NOTE: The Headlights On with Wipers feature can be turned on or off using the Uconnect® System. Refer to "Uconnect® Settings/Customer Programmable Features" in "Understanding Your Instrument Panel" for further information.

Headlight Time Delay

This feature provides the safety of headlight illumination for up to 90 seconds when leaving your vehicle in an unlit area.

To activate the delay feature, turn OFF the ignition switch while the headlights are still on. Then, turn off the headlights within 45 seconds. The delay interval begins when the headlight switch is turned off.

NOTE: The lights must be turned off within 45 seconds of turning the ignition OFF to activate this feature.

If you turn the headlights, parking lights or ignition switch ON again, the system will cancel the delay.

If you turn the headlights off before the ignition, they will turn off in the normal manner.

NOTE: The Headlight Time Delay is programmable using the Uconnect® System, refer to "Uconnect® Settings — Customer Programmable Features" in "Understanding Your Instrument Panel" for further information.

Daytime Running Lights (DRL) — If Equipped

The Daytime Running Lights will turn ON the first time the vehicle is shifted out of PARK, and remain ON unless the parking brake is applied. Upon returning to the PARK position, the DRLs will turn OFF. DRLs will turn OFF when the ignition is switched OFF.

NOTE: The daytime running lights can be turned on and off using the Uconnect® System, refer to "Uconnect® Settings — Customer Programmable Features" in "Understanding Your Instrument Panel" for further information.

Lights-On Reminder

If the headlights or parking lights are on after the ignition is placed in the OFF position, a chime will sound to alert the driver when the driver's door is opened.

Fog Lights — If Equipped

The front fog light switch is built into the headlight switch.

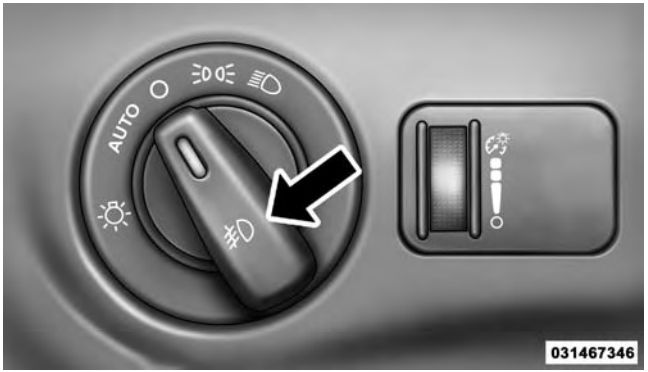

Fog Light Switch

To activate the front fog lights, turn on the parking lights or the low beam headlights and press the headlight switch. To turn off the front fog lights, either press the headlight switch a second time or turn off the headlight switch.

An indicator light in the instrument cluster illuminates when the fog lights are turned on.

NOTE: The fog lights will operate when the low beam headlights or parking lights are on. However, selecting the high beam headlights will turn off the fog lights.

Multifunction Lever

The multifunction lever controls the operation of the turn signals, headlight beam selection and passing lights. The multifunction lever is located on the left side of the steering column.

Multifunction Lever

Turn Signals

Move the multifunction lever up or down and the arrows on each side of the instrument cluster flash to show proper operation of the front and rear turn signal lights.

NOTE:

- If either light remains on and does not flash, or there is a very fast flash rate, check for a defective outside light bulb. If an indicator fails to light when the lever is moved, it would suggest that the indicator bulb is defective.
- A "Turn Signal On" message will appear in the Electronic Vehicle Information Center (EVIC) and a continuous chime will sound if the vehicle is driven more than 1 mile (1.6 km) with either turn signal on.

Lane Change Assist

Tap the lever up or down once, without moving beyond the detent, and the turn signal (right or left) will flash three times then automatically turn off.

High/Low Beam Switch

Push the multifunction lever away from you to switch the headlights to high beam. Pull the multifunction lever toward you to switch the headlights back to low beam.

Flash-To-Pass

You can signal another vehicle with your headlights by lightly pulling the multifunction lever toward you. This will turn on the high beams headlights until the lever is released.

Interior Lights

The interior lights come on when a door is opened.

To protect the battery, the interior lights will turn off automatically 10 minutes after the ignition is moved to the LOCK position. This will occur if the interior lights were switched on manually or are on because a door is open. This includes the glove box light, but not the trunk

light. To restore interior light operation, either place the ignition in the ON/RUN position or cycle the light switch.

Dimmer Controls

The dimmer control is part of the headlight switch and is located on the left side of the instrument panel. Rotating the dimmer control upward with the parking lights or headlights on will increase the brightness of the instrument panel lights, door map pockets and cupholders (if equipped).

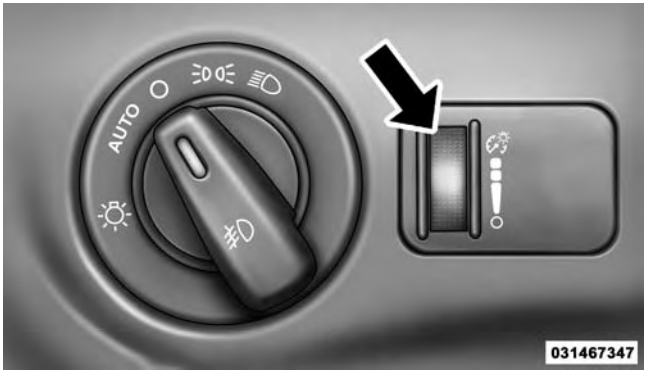

Dimmer Controls

Dome Light Position

Rotate the left dimmer control completely upward to the second detent to turn on the interior lights. The interior lights will remain on when the dimmer control is in this position.

Interior Light Defeat (OFF)

Rotate the dimmer control to the extreme bottom off position. The interior lights will remain off when the doors are open.

Parade Mode (Daytime Brightness Feature)

Rotate the dimmer control upward to the first detent. This feature brightens all text displays such as the odometer, Electronic Vehicle Information Center (EVIC), and radio when the parking lights or headlights are on.

Map/Reading Lights

These lights are mounted between the sun visors on the overhead console. Refer to “Overhead Console” in “Understanding The Features Of Your Vehicle” for further information.

WINDSHIELD WIPERS AND WASHERS

The windshield wiper/washer control lever is located on the left side of the steering column.

Windshield Wiper/Washer Lever

The front wipers are operated by rotating a switch, located at the end of the lever. For information on using

the rear window wiper/washer, refer to "Rear Window Features" in "Understanding The Features Of Your Vehicle".

Intermittent Wiper System

Use the intermittent wiper system when weather conditions make a single wiping cycle, with a variable pause between cycles, desirable. Rotate the end of the windshield wiper/washer control lever to one of the first five detents to select the desired delay interval.

Front Wiper Control

There are five delay settings, which allow you to regulate the wipe interval from a minimum of one cycle every two seconds to a maximum of approximately 36 seconds between cycles at vehicle speeds below 10 mph (16 km/h). At speeds greater than 10 mph (16 km/h), the

delay varies from a minimum of one cycle every second to a maximum of approximately 18 seconds between cycles.

NOTE: The wiper delay times depend on vehicle speed. If the vehicle is moving less than 10 mph (16 km/h), delay times will be doubled.

Windshield Wiper Operation

Rotate the end of the lever upward, to the first detent past the intermittent settings for low-speed wiper operation. Rotate the end of the lever upward to the second detent past the intermittent settings for high-speed wiper operation.

Front Wiper Control

NOTE: The wipers will automatically return to the "park" position if you turn OFF the ignition switch while they are operating. The wipers will resume operation when you turn the ignition switch back to the ON position.

CAUTION!

- **Turn the windshield wipers OFF when driving through an automatic car wash. Damage to the windshield wipers may result if the wiper control is left in any position other than OFF.**
- **In cold weather, always turn OFF the wiper switch and allow the wipers to return to the park position before turning OFF the engine. If the wiper switch is left ON and the wipers freeze to the windshield, damage to the wiper motor may occur when the vehicle is restarted.**
- **Always remove any buildup of snow that prevents the windshield wiper blades from returning to the "park" position. If the windshield wiper control is turned OFF, and the blades cannot return to the "park" position, damage to the wiper motor may occur.**

Windshield Washers

To use the windshield washer, push the washer knob, located on the end of the multifunction lever, inward to the second detent.

If you activate the washer while the wiper control is in the delay range, the wipers will operate in low-speed for two or three wipe cycles after releasing the lever and then resume the intermittent interval previously selected.

If you activate the washer while the wiper control is in the OFF position, the wipers will operate for two or three wipe cycles and then turn OFF.

WARNING!

Sudden loss of visibility through the windshield could lead to a collision. You might not see other vehicles or other obstacles. To avoid sudden icing of

(Continued)

WARNING! *(Continued)*

the windshield during freezing weather, warm the windshield with the defroster before and during windshield washer use.

Mist Feature

Push the washer knob, located on the end of the multi-function lever, inward to the first detent to activate a single wipe cycle to clear the windshield of road mist or spray from a passing vehicle. The wipers will continue to operate until you release the lever.

NOTE: The mist feature does not activate the washer pump; therefore, no washer fluid will be sprayed on the windshield. The wash function must be used in order to spray the windshield with washer fluid.

Headlights On With Wipers (Available With Automatic Headlights Only)

When this feature is active, the headlights will turn on after the wipers are turned on if the headlight switch is placed in the AUTO position and programmable feature is set to ON. In addition, the headlights will turn off when the wipers are turned off if they were turned on by this feature.

NOTE: The Headlights On with Wipers feature can be turned on or off using the Uconnect® System. Refer to "Uconnect® Settings/Customer Programmable Features" in "Understanding Your Instrument Panel" for further information.

TILT/TELESCOPING STEERING COLUMN

This feature allows you to tilt the steering column upward or downward. It also allows you to lengthen or shorten the steering column. The tilt/telescoping control handle is located below the steering wheel at the end of the steering column.

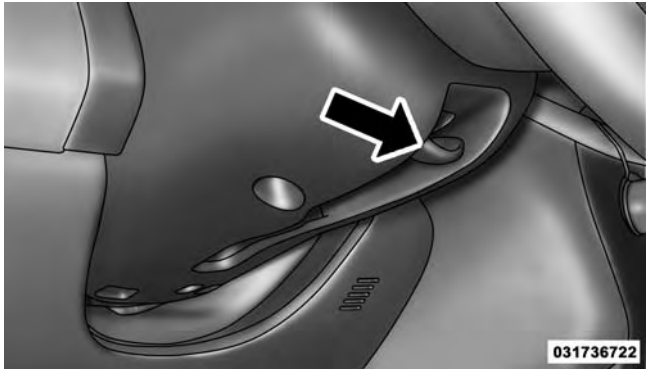

Tilt/Telescoping Steering Control Handle

To unlock the steering column, push the control handle downward. To tilt the steering column, move the steering wheel upward or downward as desired. To lengthen or shorten the steering column, pull the steering wheel outward or push it inward as desired. To lock the steering column in position, pull the control handle upward until fully engaged.

WARNING!

Do not adjust the steering column while driving. Adjusting the steering column while driving or driving with the steering column unlocked could cause the driver to lose control of the vehicle. Be sure the steering column is locked before driving your vehicle. Failure to follow this warning may result in serious injury or death.

HEATED STEERING WHEEL — IF EQUIPPED

The steering wheel contains a heating element that helps warm your hands in cold weather. The heated steering wheel has only one temperature setting. Once the heated steering wheel has been turned on it will operate for up to 80 minutes before automatically shutting off. The heated steering wheel can shut off early or may not turn on when the steering wheel is already warm.

The heated steering wheel control button is located within the Uconnect® system. You can gain access to the control button through the climate screen or the controls screen.

- Press the heated steering wheel button once to turn the heating element ON.
- Press the heated steering wheel button a second time to turn the heating element OFF.

NOTE: The engine must be running for the heated steering wheel to operate.

Vehicles Equipped With Remote Start

On models that are equipped with remote start, the heated steering wheel can be programmed to come on during a remote start through the Uconnect® system. Refer to "Uconnect® Settings" in "Understanding Your Instrument Panel" for further information.

WARNING!

- **Persons who are unable to feel pain to the skin because of advanced age, chronic illness, diabetes, spinal cord injury, medication, alcohol use, exhaustion, or other physical conditions must exercise care when using the steering wheel heater. It may cause burns even at low temperatures, especially if used for long periods.**
- **Do not place anything on the steering wheel that insulates against heat, such as a blanket or steering wheel covers of any type and material. This may cause the steering wheel heater to overheat.**

ELECTRONIC SPEED CONTROL — IF EQUIPPED

When engaged, the Electronic Speed Control takes over accelerator operations at speeds greater than 25 mph (40 km/h).

The Electronic Speed Control buttons are located on the right side of the steering wheel.

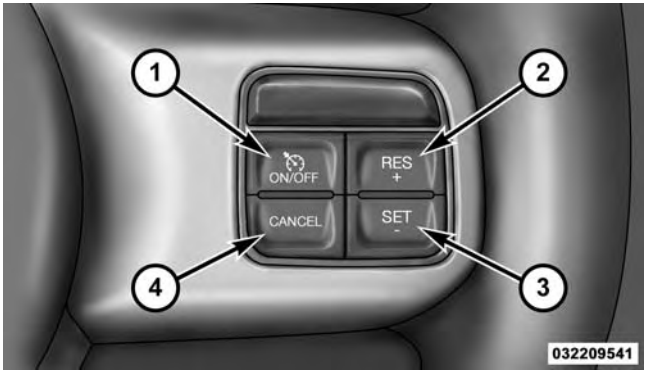

Electronic Speed Control Buttons

1 — ON/OFF	3 — SET -
2 — RES +	4 — CANCEL

NOTE: In order to ensure proper operation, the Electronic Speed Control System has been designed to shut down if multiple Speed Control functions are operated at the same time. If this occurs, the Electronic Speed Control System can be reactivated by pushing the Electronic Speed Control ON/OFF button and resetting the desired vehicle set speed.

To Activate

Push the ON/OFF button. The Cruise Indicator Light in the instrument cluster will illuminate. To turn the system off, push the ON/OFF button a second time. The Cruise Indicator Light will turn off. The system should be turned off when not in use.

WARNING!

Leaving the Electronic Speed Control system on when not in use is dangerous. You could accidentally set the system or cause it to go faster than you want. You could lose control and have an accident. Always leave the system OFF when you are not using it.

To Set A Desired Speed

Turn the Electronic Speed Control ON. When the vehicle has reached the desired speed, press the SET (-) button and release. Release the accelerator and the vehicle will operate at the selected speed.

NOTE: The vehicle should be traveling at a steady speed and on level ground before pressing the SET (-) button.

To Deactivate

A soft tap on the brake pedal, pushing the CANCEL button, or normal brake pressure while slowing the vehicle will deactivate the Electronic Speed Control without erasing the set speed from memory.

Pressing the ON/OFF button or turning the ignition switch OFF erases the set speed from memory.

To Resume Speed

To resume a previously set speed, push the RES (+) button and release. Resume can be used at any speed above 20 mph (32 km/h).

To Vary The Speed Setting

To Increase Speed

When the Electronic Speed Control is set, you can increase speed by pushing the RES (+) button.

The speed increment shown is dependant on the selected speed unit of U.S. (mph) or Metric (km/h):

U.S. Speed (mph)

- Pressing the RES (+) button once will result in a 1 mph increase in set speed. Each subsequent tap of the button results in an increase of 1 mph.
- If the button is continually pressed, the set speed will continue to increase until the button is released, then the new set speed will be established.

Metric Speed (km/h)

- Pressing the RES (+) button once will result in a 2 km/h increase in set speed. Each subsequent tap of the button results in an increase of 2 km/h.
- If the button is continually pressed, the set speed will continue to increase until the button is released, then the new set speed will be established.

To Decrease Speed

When the Electronic Speed Control is set, you can decrease speed by pushing the SET (-) button.

The speed decrement shown is dependant on the selected speed unit of U.S. (mph) or Metric (km/h):

U.S. Speed (mph)

- Pressing the SET (-) button once will result in a 1 mph decrease in set speed. Each subsequent tap of the button results in a decrease of 1 mph.
- If the button is continually pressed, the set speed will continue to decrease until the button is released, then the new set speed will be established.

Metric Speed (km/h)

- Pressing the SET (-) button once will result in a 2 km/h decrease in set speed. Each subsequent tap of the button results in a decrease of 2 km/h.
- If the button is continually pressed, the set speed will continue to decrease until the button is released, then the new set speed will be established.

To Accelerate For Passing

Press the accelerator as you would normally. When the pedal is released, the vehicle will return to the set speed.

Using Electronic Speed Control On Hills

The transmission may downshift on hills to maintain the vehicle set speed.

NOTE: The Electronic Speed Control system maintains speed up and down hills. A slight speed change on moderate hills is normal.

On steep hills, a greater speed loss or gain may occur so it may be preferable to drive without Electronic Speed Control.

WARNING!

Electronic Speed Control can be dangerous where the system cannot maintain a constant speed. Your vehicle could go too fast for the conditions, and you could lose control and have an accident. Do not use Electronic Speed Control in heavy traffic or on roads that are winding, icy, snow-covered or slippery.

PARKSENSE® REAR PARK ASSIST — IF EQUIPPED

The ParkSense® Rear Park Assist system provides visual and audible indications of the distance between the rear fascia and a detected obstacle when backing up, e.g. during a parking maneuver. Refer to "ParkSense® System Usage Precautions" in this section for limitations of this system and recommendations.

ParkSense® will retain the last system state (enabled or disabled) from the last ignition cycle when the ignition is changed to the ON/RUN position.

ParkSense® can be active only when the shift lever is in REVERSE. If ParkSense® is enabled at this shift lever position, the system will remain active until the vehicle speed is increased to approximately 7 mph (11 km/h) or above. The system will become active again if the vehicle speed is decreased to speeds less than approximately 6 mph (9 km/h).

ParkSense® Sensors

The four ParkSense® sensors, located in the rear fascia/bumper, monitor the area behind the vehicle that is within the sensors' field of view. The sensors can detect obstacles from approximately 12 in (30 cm) up to 79 in (200 cm) from the rear fascia/bumper in the horizontal direction, depending on the location, type and orientation of the obstacle.

ParkSense® Warning Display

The ParkSense® Warning screen will only be displayed if Sound and Display is selected from the Uconnect® System. Refer to "Uconnect® Settings" in "Understanding Your Instrument Panel" for further information.

The ParkSense® Warning screen is located within the Electronic Vehicle Information Center (EVIC). It provides visual warnings to indicate the distance between the rear fascia/bumper and the detected obstacle. Refer to "Electronic Vehicle Information Center (EVIC) Settings" in "Understanding Your Instrument Panel" for further information.

ParkSense® Display

When the vehicle is in REVERSE, the warning display will turn ON indicating the system status.

032769129

Park Assist Ready

032835529

Park Assist System Off

032835531

Slow Tone

The system will indicate a detected obstacle by showing three solid arcs and will produce a one-half second tone. As the vehicle moves closer to the obstacle, the EVIC display will show fewer arcs and the sound tone will change from slow, to fast, to continuous.

032769132

Fast Tone

032769133

Continuous Tone

The vehicle is close to the obstacle when the warning display shows one flashing arc and sounds a continuous tone. The following chart shows the warning alert operation when the system is detecting an obstacle:

WARNING ALERTS					
Rear Distance (in/cm)	Greater than 79 in (200 cm)	79-39 in (200-100 cm)	39-25 in (100-65 cm)	25-12 in (65-30 cm)	Less than 12 in (30 cm)
Audible Alert Chime	None	Single 1/2-Second Tone	Slow	Fast	Continuous
Arcs	None	3 Solid (Continuous)	3 Slow Flashing	2 Slow Flashing	1 Slow Flashing

Enabling And Disabling ParkSense®

ParkSense® can be enabled and disabled using the Uconnect® System. The available choices are: Off, Sound Only, or Sound and Display. Refer to "Uconnect® Settings" in "Understanding Your Instrument Panel" for further information.

When the ParkSense® button is pushed to disable the system, the EVIC will display the "PARK ASSIST SYSTEM OFF" message for approximately five seconds. Refer to "Electronic Vehicle Information Center (EVIC)" in "Understanding Your Instrument Panel" for further information. When the shift lever is moved to REVERSE

and the system is disabled, the EVIC will display the "PARK ASSIST SYSTEM OFF" message for as long as the vehicle is in REVERSE.

Service The ParkSense® Rear Park Assist System

During vehicle start up, when the ParkSense® Rear Park Assist system has detected a fault condition, the Electronic Vehicle Information Center (EVIC) will actuate a single chime, once per ignition cycle, and it will display the "CLEAN PARK ASSIST", "SERVICE PARK ASSIST", or "SERVICE PARK ASSIST SYSTEM" message. Refer to "Electronic Vehicle Information Center (EVIC)" in "Understanding Your Instrument Panel" for further information. When the shift lever is moved to REVERSE and the system has detected a fault condition, the EVIC will display the "CLEAN PARK ASSIST", "SERVICE PARK ASSIST", OR "SERVICE PARK ASSIST SYSTEM" messages for as long as the vehicle is in REVERSE. Under this condition, ParkSense® will not operate.

If "CLEAN PARK ASSIST" appears in the Electronic Vehicle Information Center (EVIC) make sure the outer surface and the underside of the rear fascia/bumper is clean and clear of snow, ice, mud, dirt or other obstruction and then cycle the ignition. If the message continues to appear see an authorized dealer.

If "SERVICE PARK ASSIST" or "SERVICE PARK ASSIST SYSTEM" appears in the EVIC, see an authorized dealer.

Cleaning The ParkSense® System

Clean the ParkSense® sensors with water, car wash soap and a soft cloth. Do not use rough or hard cloths. Do not scratch or poke the sensors. Otherwise, you could damage the sensors.

ParkSense® System Usage Precautions

NOTE:

- Ensure that the rear bumper is free of snow, ice, mud, dirt and debris to keep the ParkSense® system operating properly.
- Jackhammers, large trucks, and other vibrations could affect the performance of ParkSense®.
- When you turn ParkSense® off, the EVIC will display "PARK ASSIST SYSTEM OFF." Furthermore, once you turn ParkSense® off, it remains off until you turn it on again, even if you cycle the ignition key.
- When you move the shift lever to the REVERSE position and ParkSense® is turned off, the EVIC will display the "PARK ASSIST SYSTEM OFF" message for as long as the vehicle is in REVERSE.
- Clean the ParkSense® sensors regularly, taking care not to scratch or damage them. The sensors must not be covered with ice, snow, slush, mud, dirt or debris. Failure to do so can result in the system not working properly. The ParkSense® system might not detect an obstacle behind the fascia/bumper, or it could provide a false indication that an obstacle is behind the fascia/bumper.
- Ensure the ParkSense® system is OFF if objects such as bicycle carriers, trailer hitches, etc., are placed within 12 in (30 cm) from the rear fascia/bumper. Failure to do so can result in the system misinterpreting a close object as a sensor problem, causing the "SERVICE PARK ASSIST SYSTEM" message to be displayed in the EVIC.

CAUTION!

- **ParkSense® is only a parking aid and it is unable to recognize every obstacle, including small obstacles. Parking curbs might be temporarily detected or not detected at all. Obstacles located above or below the sensors will not be detected when they are in close proximity.**
- **The vehicle must be driven slowly when using ParkSense® in order to be able to stop in time when an obstacle is detected. It is recommended that the driver looks over his/her shoulder when using ParkSense®.**

WARNING!

- **Drivers must be careful when backing up even when using ParkSense®. Always check carefully behind your vehicle, look behind you, and be sure to check for pedestrians, animals, other vehicles, obstructions, and blind spots before backing up. You are responsible for safety and must continue to pay attention to your surroundings. Failure to do so can result in serious injury or death.**

(Continued)

WARNING! *(Continued)*

- **Before using ParkSense®, it is strongly recommended that the ball mount and hitch ball assembly is disconnected from the vehicle when the vehicle is not used for towing. Failure to do so can result in injury or damage to vehicles or obstacles because the hitch ball will be much closer to the obstacle than the rear fascia when the loudspeaker sounds the continuous tone. Also, the sensors could detect the ball mount and hitch ball assembly, depending on its size and shape, giving a false indication that an obstacle is behind the vehicle.**

PARKVIEW® REAR BACK UP CAMERA — IF EQUIPPED

Your vehicle may be equipped with the ParkView® Rear Back Up Camera that allows you to see an on-screen image of the rear surroundings of your vehicle whenever the shift lever is put into REVERSE. The ParkView® camera is located on the rear of the vehicle above the rear License plate. The image will be displayed in the touchscreen display along with a caution note to "check entire surroundings" across the top of the screen. After five seconds this note will disappear.

When the vehicle is shifted out of REVERSE, the rear camera mode is exited and the last selected touchscreen appears again.

If your vehicle is equipped with the Camera Delay feature and it is turned ON, the rear camera image will be displayed for up to 10 seconds when the vehicle is shifted out of REVERSE unless the forward vehicle speed exceeds 8 mph (13 km/h), the transmission is shifted into "PARK" or the vehicle's ignition is cycled to the OFF position.

Static grid lines will illustrate the width of the vehicle while a dashed center-line will indicate the center of the

vehicle to assist with parking or aligning to a hitch/receiver. The static grid lines will show separate zones that will help indicate the distance to the rear of the vehicle.

NOTE: The ParkView® Rear Back Up Camera has programmable modes of operation that may be selected through the Uconnect® System. Refer to "Uconnect® Settings" in "Understanding Your Instrument Panel" for further information.

Different colored zones indicate the distance to the rear of the vehicle.

The following table shows the approximate distances for each zone:

Zone	Distance to the rear of the vehicle
Red	0 - 1 ft (0 - 30 cm)
Yellow	1 ft - 3 ft (30 cm - 1 m)
Green	3 ft or greater (1 m or greater)

WARNING!

Drivers must be careful when backing up even when using the ParkView® Rear Back Up Camera. Always check carefully behind your vehicle, and be sure to check for pedestrians, animals, other vehicles, obstructions, or blind spots before backing up. You are responsible for the safety of your surroundings and must continue to pay attention while backing up. Failure to do so can result in serious injury or death.

CAUTION!

- **To avoid vehicle damage, ParkView® should only be used as a parking aid. The ParkView® camera is unable to view every obstacle or object in your drive path.**

(Continued)

CAUTION! ***(Continued)***

- **To avoid vehicle damage, the vehicle must be driven slowly when using ParkView® to be able to stop in time when an obstacle is seen. It is recommended that the driver look frequently over his/her shoulder when using ParkView®.**

NOTE: If snow, ice, mud, or any foreign substance builds up on the camera lens, clean the lens, rinse with water, and dry with a soft cloth. Do not cover the lens.

OVERHEAD CONSOLE

The overhead console contains courtesy/reading lights, storage for sunglasses, an interior observation mirror and an optional power sunroof switch.

Overhead Console

Courtesy/Reading Lights

The overhead console has two courtesy lights. The lights turn on when a front door, a sliding door or the liftgate is opened. If your vehicle is equipped with Remote Keyless Entry (RKE) the lights will also turn on when the UNLOCK button on the RKE transmitter is pressed. The courtesy lights also function as reading lights. Press in on each lens to turn these lights on while inside the vehicle. Press the lens a second time to turn each light off. You may adjust the direction of these lights by pressing the outside ring, which is identified with four directional arrows.

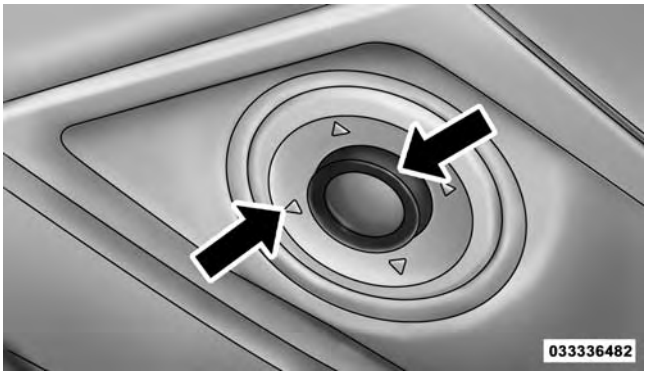

Courtesy/Reading Light

Sunglasses Storage

To access the storage compartment, press on the raised bars on the compartment door in the center of the console and release and the door will swing downward.

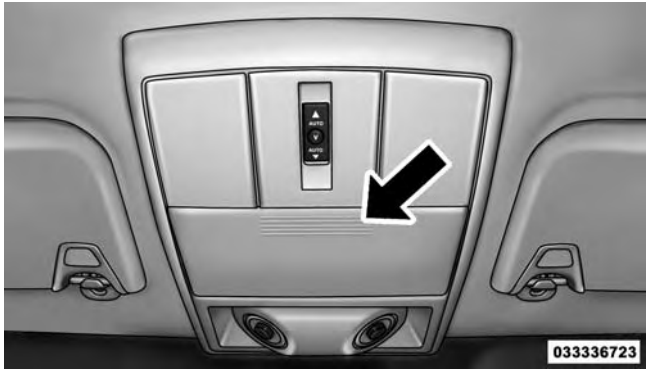

Sunglasses Storage Compartment

Interior Observation Mirror

The convex interior observation mirror provides the driver and front seat passenger a wide field of view to conveniently view passengers sitting in the rear passenger seats. To use the interior observation mirror, press on the raised bars on the compartment door and release (the door will swing downward), then raise the door until it is almost closed and release. The door will latch in position to use the interior observation mirror.

NOTE: From the "observation mirror" position, the door can only be closed.

To return to the full open position, the door must first be closed and then opened by pressing the latch again to release.

Observation Mirror

Power Sunroof Switch — If Equipped

Refer to "Power Sunroof" in "Understanding the Features Of Your Vehicle" for further information.

GARAGE DOOR OPENER — IF EQUIPPED

HomeLink® replaces up to three remote controls (hand-held transmitters) that operate devices such as garage door openers, motorized gates, lighting or home security systems. The HomeLink® unit operates off your vehicle's battery.

The HomeLink® buttons, located on either the overhead console, headliner or sunvisor, designate the three different HomeLink® channels. The HomeLink® indicator is located above the center button.

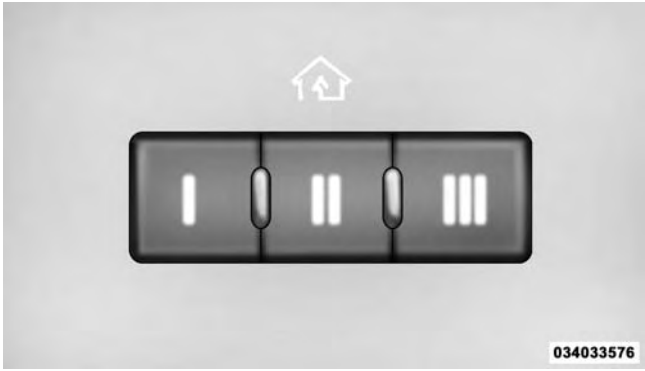

HomeLink® Buttons/Overhead Consoles

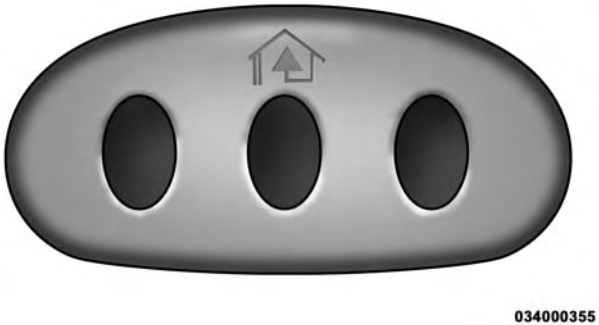

HomeLink® Buttons/Sunvisor/Headliner

NOTE: HomeLink® is disabled when the Vehicle Security Alarm is active.

Before You Begin Programming HomeLink®

Be sure that your vehicle is parked outside of the garage before you begin programming.

For more efficient programming and accurate transmission of the radio-frequency signal it is recommended that a new battery be placed in the hand-held transmitter of the device that is being programmed to the HomeLink® system.

To erase the channels place the ignition in the ON/RUN position and push and hold the two outside HomeLink® buttons (I and III) for up 20 seconds or until the red indicator flashes.

NOTE:

- Erasing all channels should only be performed when programming HomeLink® for the first time. Do not erase channels when programming additional buttons.
- If you have any problems, or require assistance, please call toll-free 1-800-355-3515 or, on the Internet at HomeLink.com for information or assistance.

Programming A Rolling Code

For programming garage door openers that were manufactured after 1995. These garage door openers can be identified by the "LEARN" or "TRAIN" button located where the hanging antenna is attached to the garage door opener. It is NOT the button that is normally used to open and close the door. The name and color of the button may vary by manufacturer.

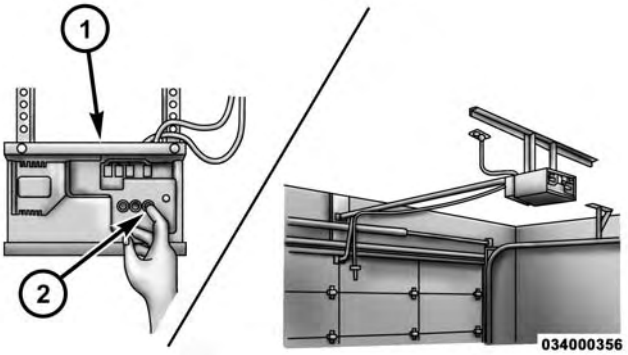

Training The Garage Door Opener

1 — Door Opener
2 — Training Button

1. Cycle the ignition to the ON/RUN position.

2. Place the hand-held transmitter 1 to 3 in (3 to 8 cm) away from the HomeLink® button you wish to program while keeping the HomeLink® indicator light in view.

3. Push and hold the HomeLink® button you want to program while you push and hold the hand-held transmitter button.

4. Continue to hold both buttons and observe the indicator light. The HomeLink® indicator will flash slowly and then rapidly after HomeLink® has received the frequency signal from the hand-held transmitter. Release both buttons after the indicator light changes from slow to rapid.

5. At the garage door opener motor (in the garage), locate the "LEARN" or "TRAINING" button. This can usually be found where the hanging antenna wire is attached to the garage door opener/device motor. Firmly push and release the "LEARN" or "TRAINING" button. On some garage door openers/devices there may be a light that blinks when the garage door opener/device is in the LEARN/TRAIN mode.

NOTE: You have 30 seconds in which to initiate the next step after the LEARN button has been pushed.

6. Return to the vehicle and push the programmed HomeLink® button twice (holding the button for two seconds each time). If the garage door opener/device activates, programming is complete.

NOTE: If the garage door opener/device does not activate, push the button a third time (for two seconds) to complete the training.

To program the remaining two HomeLink® buttons, repeat each step for each remaining button. DO NOT erase the channels.

Reprogramming A Single HomeLink® Button (Rolling Code)

To reprogram a channel that has been previously trained, follow these steps:

1. Cycle the ignition to the ON/RUN position.
2. Push and hold the desired HomeLink® button until the indicator light begins to flash after 20 seconds. **Do not release the button.**
3. **Without releasing the button** proceed with "Programming A Rolling Code" step 2 and follow all remaining steps.

Programming A Non-Rolling Code

For programming Garage Door Openers manufactured before 1995.

1. Turn the ignition switch to the ON/RUN position.
2. Place the hand-held transmitter 1 to 3 inches (3 to 8 cm) away from the HomeLink® button you wish to program while keeping the HomeLink® indicator light in view.
3. Push and hold the Homelink® button you want to program while you push and hold the hand-held transmitter button.
4. Continue to hold both buttons and observe the indicator light. The Homelink® indicator will flash slowly and then rapidly after HomeLink® has received the frequency signal from the hand-held transmitter. Release both buttons after the indicator light changes from slow to rapid.
5. Push and hold the programmed HomeLink® button and observe the indicator light.
   - If the indicator light stays on constantly, programming is complete and the garage door/device should activate when the HomeLink® button is pushed.

- To program the two remaining HomeLink® buttons, repeat each step for each remaining button. DO NOT erase the channels.

Reprogramming A Single HomeLink® Button (Non-Rolling Code)

To reprogram a channel that has been previously trained, follow these steps:

1. Cycle the ignition to the ON/RUN position.
2. Push and hold the desired HomeLink® button until the indicator light begins to flash after 20 seconds. **Do not release the button.**
3. **Without releasing the button** proceed with "Programming A Non-Rolling Code" step 2 and follow all remaining steps.

Canadian/Gate Operator Programming

For programming transmitters in Canada/United States that require the transmitter signals to "time-out" after several seconds of transmission.

Canadian radio frequency laws require transmitter signals to time-out (or quit) after several seconds of transmission – which may not be long enough for HomeLink® to pick up the signal during programming. Similar to this Canadian law, some U.S. gate operators are designed to time-out in the same manner.

It may be helpful to unplug the device during the cycling process to prevent possible overheating of the garage door or gate motor.

1. Cycle the ignition to the ON/RUN position.

2. Place the hand-held transmitter 1 to 3 inches (3 to 8 cm) away from the HomeLink® button you wish to program while keeping the HomeLink® indicator light in view.
3. Continue to push and hold the HomeLink® button, while you push and release ("cycle") your hand-held transmitter every two seconds until HomeLink® has successfully accepted the frequency signal. The indicator light will flash slowly and then rapidly when fully trained.
4. Watch for the HomeLink® indicator to change flash rates. When it changes, it is programmed. It may take up to 30 seconds or longer in rare cases. The garage door may open and close while you are programming.
5. Push and hold the programmed HomeLink® button and observe the indicator light.
   - If the indicator light stays on constantly, programming is complete and the garage door/device should activate when the HomeLink® button is pushed.
   - To program the two remaining HomeLink® buttons, repeat each step for each remaining button. DO NOT erase the channels.

If you unplugged the garage door opener/device for programming, plug it back in at this time.

Reprogramming A Single HomeLink® Button (Canadian/Gate Operator)

To reprogram a channel that has been previously trained, follow these steps:

1. Cycle the ignition to the ON/RUN position.
2. Push and hold the desired HomeLink® button until the indicator light begins to flash after 20 seconds. **Do not release the button.**

3. **Without releasing the button** proceed with "Canadian/Gate Operator Programming" step 2 and follow all remaining steps.

Using HomeLink®

To operate, push and release the programmed HomeLink® button. Activation will now occur for the programmed device (i.e., garage door opener, gate operator, security system, entry door lock, home/office lighting, etc.,). The hand-held transmitter of the device may also be used at any time.

Security

It is advised to erase all channels before you sell or turn in your vehicle.

To do this, push and hold the two outside buttons for 20 seconds until the red indicator flashes. Note that all channels will be erased. Individual channels cannot be erased.

The HomeLink® Universal Transceiver is disabled when the Vehicle Security Alarm is active.

Troubleshooting Tips

If you are having trouble programming HomeLink®, here are some of the most common solutions:

- Replace the battery in the original hand-held transmitter.
- Push the LEARN button on the Garage Door Opener to complete the training for a Rolling Code.
- Did you unplug the device for programming and remember to plug it back in?

If you have any problems, or require assistance, please call toll-free 1-800-355-3515 or, on the Internet at HomeLink.com for information or assistance.

WARNING!

Vehicle exhaust contains carbon monoxide, a dangerous gas. Do not run your vehicle in the garage while programming the transceiver. Exhaust gas can cause serious injury or death.

WARNING!

Your motorized door or gate will open and close while you are programming the universal transceiver. Do not program the transceiver if people, pets or other objects are in the path of the door or gate. Only use this transceiver with a garage door opener that has a "stop and reverse" feature as required by Federal safety standards. This includes most garage door opener models manufactured after 1982. Do not

(Continued)

WARNING! *(Continued)*

use a garage door opener without these safety features. Call toll-free 1–800–355–3515 or, on the Internet at www.HomeLink.com for safety information or assistance.

General Information

This device complies with FCC rules Part 15 and Industry Canada RSS-210. Operation is subject to the following two conditions:

1. This device may not cause harmful interference.
2. This device must accept any interference that may be received including interference that may cause undesired operation.

NOTE:

- The transmitter has been tested and it complies with FCC and IC rules. Changes or modifications not expressly approved by the party responsible for compliance could void the user's authority to operate the device.
- The term IC before the certification/registration number only signifies that Industry Canada technical specifications were met.

POWER SUNROOF — IF EQUIPPED

The power sunroof switch is located between the sun visors on the overhead console.

Power Sunroof Switch

WARNING!

- **Never leave children unattended in a vehicle, or with access to an unlocked vehicle. Never leave the Key Fob in or near the vehicle, or in a location accessible to children. Do not leave the ignition of a vehicle equipped with Keyless Enter-N-Go™ in the ACC or ON/RUN mode. Occupants, particularly unattended children, can become entrapped by the power sunroof while operating the power sunroof switch. Such entrapment may result in serious injury or death.**
- **In a collision, there is a greater risk of being thrown from a vehicle with an open sunroof. You could also be seriously injured or killed. Always fasten your seat belt properly and make sure all passengers are also properly secured.**

(Continued)

WARNING! ***(Continued)***

- **Do not allow small children to operate the sunroof. Never allow your fingers, other body parts, or any object, to project through the sunroof opening. Injury may result.**

Opening Sunroof — Express

Press the switch rearward and release it within one-half second. The sunroof and sunshade will open automatically from any position. The sunroof and sunshade will open fully and stop automatically. This is called “Express Open”. During Express Open operation, any movement of the sunroof switch will stop the sunroof.

Opening Sunroof — Manual Mode

To open the sunroof, press and hold the switch rearward to full open. Any release of the switch will stop the

movement. The sunroof and sunshade will remain in a partially opened condition until the switch is pushed and held rearward again.

Closing Sunroof — Express

Press the switch forward and release it within one-half second and the sunroof will close automatically from any position. The sunroof will close fully and stop automatically. This is called "Express Close". During Express Close operation, any movement of the switch will stop the sunroof.

Closing Sunroof — Manual Mode

To close the sunroof, press and hold the switch in the forward position. Any release of the switch will stop the movement and the sunroof will remain in a partially closed condition until the switch is pushed and held forward again.

Sunroof Fully Closed

Press the switch forward and release to ensure that the sunroof is fully closed.

Pinch Protect Feature

This feature will detect an obstruction in the opening of the sunroof during Express Close operation. If an obstruction in the path of the sunroof is detected, the sunroof will automatically retract. Remove the obstruction if this occurs. Next, press the switch forward and release to Express Close.

Venting Sunroof — Express

Press and release the Vent button within one half second and the sunroof will open to the vent position. This is called "Express Vent" and it will occur regardless of sunroof position. During Express Vent operation, any movement of the switch will stop the sunroof.

Sunshade Operation

The sunshade can be opened manually. However, the sunshade will open automatically as the sunroof opens.

NOTE: The sunshade cannot be closed if the sunroof is open.

Wind Buffeting

Wind buffeting can be described as the perception of pressure on the ears or a helicopter-type sound in the ears. Your vehicle may exhibit wind buffeting with the windows down, or the sunroof (if equipped) in certain open or partially open positions. This is a normal occurrence and can be minimized. If the buffeting occurs with the rear windows open, open the front and rear windows together to minimize the buffeting. If the buffeting occurs with the sunroof open, adjust the sunroof opening to minimize the buffeting or open any window.

Sunroof Maintenance

Use only a nonabrasive cleaner and a soft cloth to clean the glass panel.

Ignition Off Operation

The power sunroof switch will remain active for up to approximately ten minutes after the ignition switch is turned to the LOCK position. Opening either front door will cancel this feature.

NOTE: Ignition Off time is programmable through the Uconnect® System. Refer to "Uconnect® Settings/ Customer Programmable Features" in "Understanding Your Instrument Panel" for further information.

ELECTRICAL POWER OUTLETS

A 12 Volt (13 Amp) power outlet is located in the center console below the radio. The power outlet has power available when the ignition in the ON/RUN or ACC position.

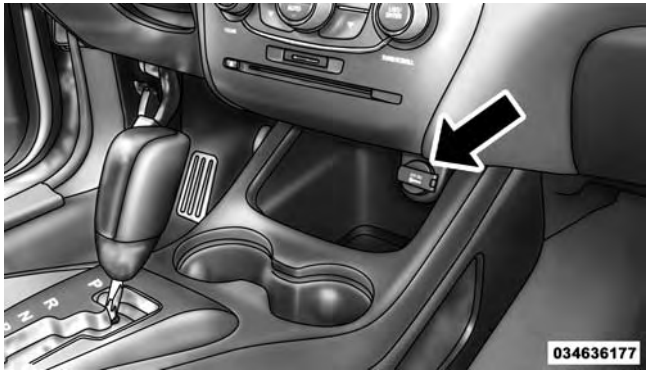

Front 12 Volt Power Outlet

This power outlet will also operate a conventional cigar lighter unit. **To preserve the heating element, do not hold the lighter in the heating position.**

A second 12 Volt (13 Amp) power outlet is located inside the center console storage area. Power is available with the ignition is in the ON/RUN, ACC or LOCK position.

Center Console 12 Volt Power Outlet

A third fused 12 Volt power outlet is located on the back of the center console. This power outlet has power available when the ignition is in the LOCK, ON or ACC position.

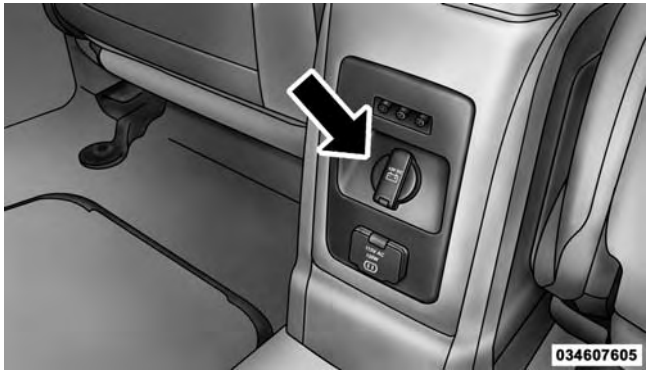

Rear Seat 12 Volt Power Outlet

A fourth fused 12 Volt power outlet is located on the left quarter trim panel in the cargo area. This power outlet has power available when the ignition is in the ON or ACC position.

Rear Cargo Area Power Outlet

NOTE: To ensure proper operation a MOPAR® knob and element must be used.

CAUTION!

- **Do not exceed the maximum power of 160 Watts (13 Amps) at 12 Volts. If the 160 Watt (13 Amp) power rating is exceeded the fuse protecting the system will need to be replaced.**
- **The power outlet on the bottom of the center console shares the fuse with the power outlet on the back of the console. The combined usage must not exceed 160 Watts (13 Amps) at 12 Volts.**
- **Power outlets are designed for accessory plugs only. Do not insert any other object in the power outlets as this will damage the outlet and blow the fuse. Improper use of the power outlet can cause damage not covered by your New Vehicle Limited Warranty.**

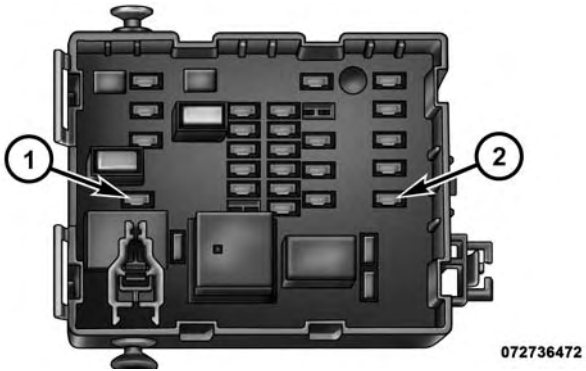

Power Outlet Fuses

1 — F103 20 A Yellow Power Outlet Console Bin & Power Outlet Console Rear
2 — F102 20 A Yellow Cigar Lighter Instrument Panel & Power Outlet Left Rear Cargo Area

WARNING!

To avoid serious injury or death:

- **Only devices designed for use in this type of outlet should be inserted into any 12 Volt outlet.**
- **Do not touch with wet hands.**
- **Close the lid when not in use and while driving the vehicle.**
- **If this outlet is mishandled, it may cause an electric shock and failure.**

CAUTION!

- **Many accessories that can be plugged in draw power from the vehicle's battery, even when not in use (i.e., cellular phones, etc.). Eventually, if plugged in long enough, the vehicle's battery will discharge sufficiently to degrade battery life and/or prevent the engine from starting.**
- **Accessories that draw higher power (i.e., coolers, vacuum cleaners, lights, etc.) will degrade the battery even more quickly. Only use these intermittently and with greater caution.**
- **After the use of high power draw accessories, or long periods of the vehicle not being started (with accessories still plugged in), the vehicle must be driven a sufficient length of time to allow the alternator to recharge the vehicle's battery.**

(Continued)

CAUTION! *(Continued)*

- **Power outlets are designed for accessory plugs only. Do not hang any type of accessory or accessory bracket from the plug.**

POWER INVERTER — IF EQUIPPED

Your vehicle may be equipped with a 115 Volt AC (150 Watt maximum) power outlet located on the back of the center console. This outlet can power mobile phones, electronics and other low power devices requiring power up to 150 Watts. Certain high-end video games, such as Playstation3 and XBox360 will exceed this power limit, as will most power tools.

Power Inverter

The power inverter is designed with built-in overload protection. If the power rating of 150 Watts is exceeded, the power inverter will automatically shut down. Once the electrical device has been removed from the outlet the inverter should automatically reset. If the power rating exceeds approximately 170 Watts, the power inverter

may have to be reset manually. To reset the inverter manually press the power inverter button OFF and ON. To avoid overloading the circuit, check the power ratings on electrical devices prior to using the inverter.

NOTE: Due to built-in overload protection, the power outlet will shut down if the 115 Volt AC (150 Watt maximum) power rating is exceeded.

WARNING!

To avoid serious injury or death:
- **Do not use a three-prong adaptor.**
- **Do not insert any objects into the receptacles.**
- **Do not touch with wet hands.**
- **Close the lid when not in use.**
- **If this outlet is mishandled, it may cause an electric shock and failure.**

Power Inverter Operation

The power inverter is turned on and off using the Uconnect® System.

Vehicles Equipped With Uconnect® 4.3

To turn the power inverter on or off perform the following:

1. Press the “More” button on the faceplate (located next to the Uconnect® display).
2. Press the “Outlet” button on the touchscreen (located on the Uconnect® display) to turn the power inverter On or Off.

Vehicles Equipped With Uconnect® 8.4 And 8.4 Nav

To enable or disable the power inverter perform the following:

1. Press the “Controls” button on the touchscreen.
2. Press the “Outlet” button on the touchscreen to turn the power inverter On or Off.

CUPHOLDERS

There are two cupholders, located in the center floor console, for the front passengers.

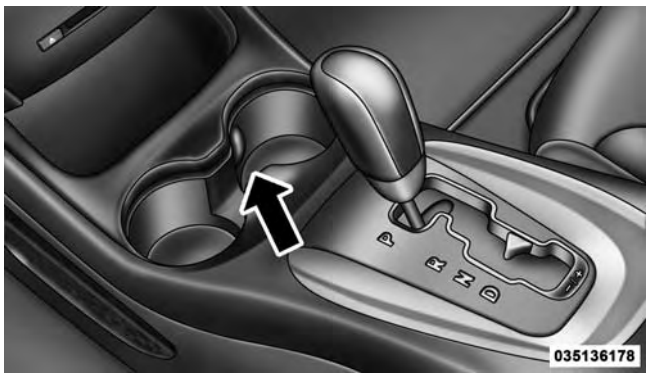

Floor Console Cupholders

For passengers in the second row there are two cupholders, located in the center armrest between the two seats.

When the armrest is folded flat the cupholders are in the back of the Head Restraint. The Head Restraint can be adjusted to better position the cupholders.

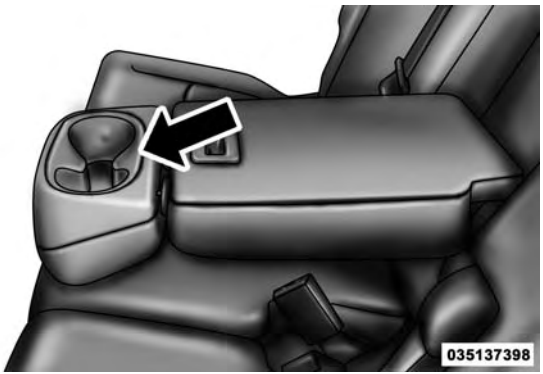

Armrest Cupholders

For vehicles equipped with third row seating, there are additional cupholders located in the trim panels.

In addition to cupholders, vehicles may also be equipped with bottle holders. The bottle holders are located on the door trim panels.

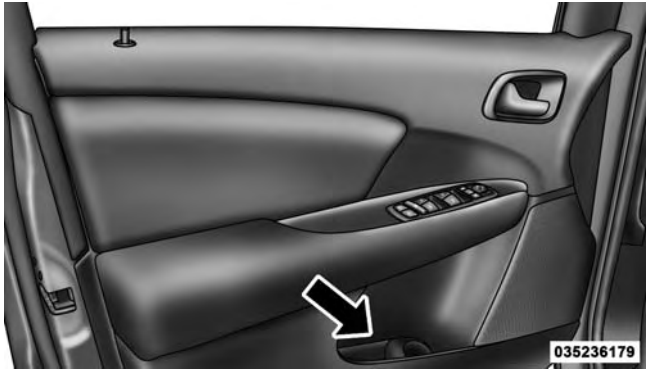

Door Bottle Holder

WARNING!

If containers of hot liquid are placed in the bottle holder, they can spill when the door is closed, burning the occupants. Be careful when closing the doors to avoid injury.

STORAGE

Glove Compartment

The glove compartment is located on the passenger side of the instrument panel. Pull on the release handle to open the glove compartment.

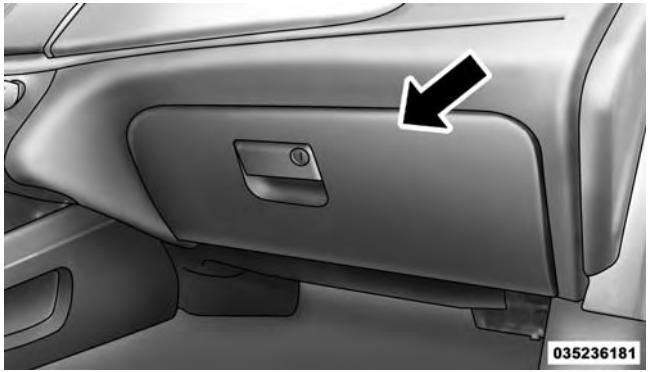

Glove Compartment

Floor Console Storage

An open storage area, or cubby bin, is located in the floor console.

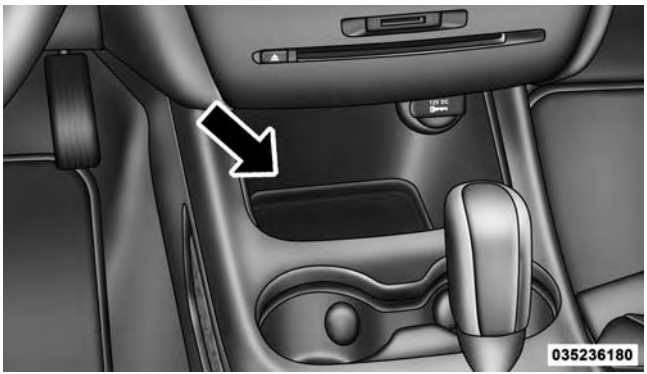

Floor Console Cubby Bin

Center Console Storage

There is a storage tray and storage compartment located under the center console armrest.

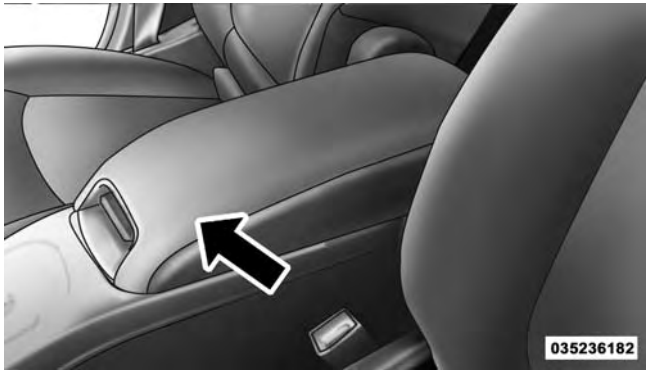

Center Console

Pull upward on the release handle, located on the front of the lid, to gain access to the storage tray and storage compartment.

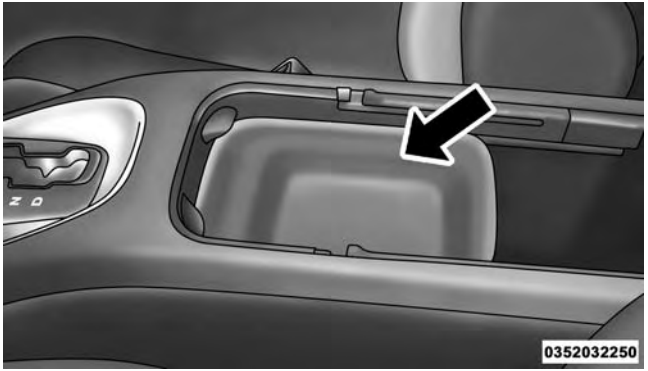

Center Console Storage Tray

The storage tray can be slid forward and rearward or removed to access the center console storage compartment.

Center Console Storage Compartment

WARNING!

Do not operate this vehicle with a console compartment lid in the open position. Driving with the console compartment lid open may result in injury in a collision.

Sliding Armrest

The center console armrest can also be slid rearward for easy access to the storage area.

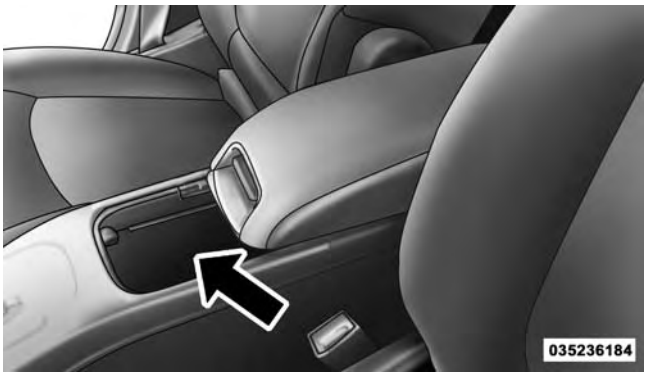

Sliding Armrest

WARNING!

Do not operate this vehicle with a console compartment lid in the open position. Driving with the console compartment lid open may result in injury in a collision.

Flip 'n Stow™ Front Passenger Seat Storage — If Equipped

The seat latch release-loop is located in the center of the seat cushion between the seat cushion and the seatback. Pull the loop upward to release the latch and then forward to open the seat to the detent position.

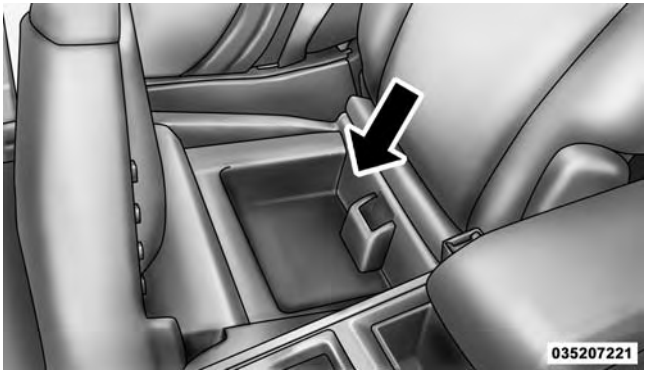

Front Passenger Seat Storage Compartment

NOTE: Make sure that objects inside the bin do not interfere with the latch before closing the seat. Push the seat cushion downward after closing it to make sure it latches to the base.

WARNING!

Be certain that the seat cushion is locked securely into position before using the seat. Otherwise, the seat will not provide the proper stability for passengers. An improperly latched seat cushion could cause serious injury.

Second-Row Passenger Seat Temporary Storage Bin

This is a temporary storage bin designed for use when the seatback/armrest is down. Be sure to remove all items from this bin before raising the seatback/armrest.

Second-Row Map Pocket And Grocery Retainers — If Equipped

A map storage pocket and grocery retainers are located on the back of the drivers seatback.

Seat Storage And Grocery Retainers

In-Floor Storage Bin With Removable Liner

NOTE: Position the front seat to at least a mid-track position to provide easier access to the storage bin.

An in-floor storage bin is located behind each front seat. Each 1.6 gal (5.9L) bin can hold up to 12, 12 oz (0.35L)

cans, plus ice, or other items. The removable bin liner allows for easy filling, emptying, and cleaning.

To access the bin, position the floor mat aside (if equipped). Pull the door latch release-loop upward to release the latch and then forward to open the bin door.

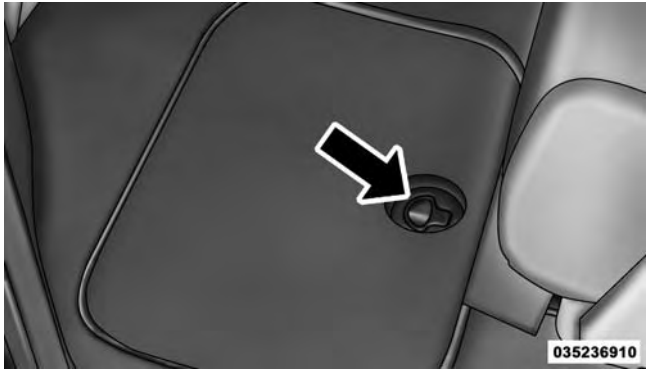

In-Floor Storage

The liner can be removed for easy cleaning.

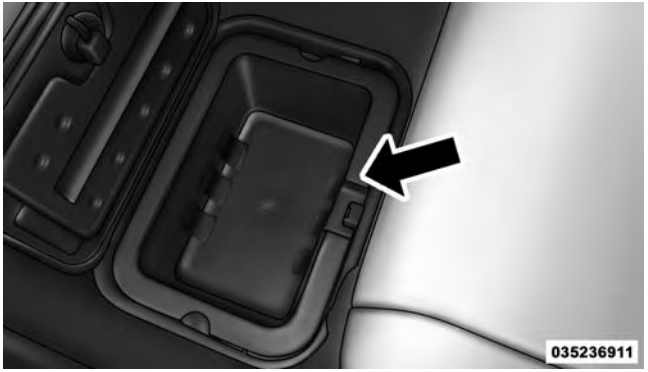

Removable Liner

CARGO AREA FEATURES

Rechargeable Flashlight — If Equipped

The rechargeable LED flashlight stores in its charging station in the left rear quarter trim panel. To remove it, press on the indent on the side of the flashlight and release.

Rechargeable Flashlight

To operate the flashlight, press the switch once for high, twice for low, and a third time to return to off.

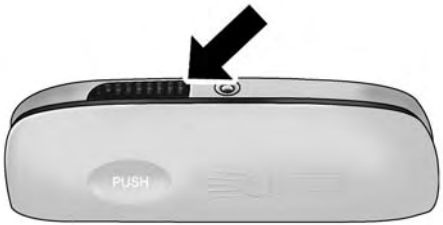

035410217

Three-Press Switch

NOTE: Be sure to return the flashlight to its charging station when not in use to ensure it is ready for operation the next time you need it.

Cargo Management System

Five Passenger System Features

- A raised load floor that sits on top of a large built-in storage bin.
- A tri-fold door built into the load floor that allows easy access to items in the built-in storage bin.
- 60/40 split second-row passenger seats with fold flat feature, which allows for extended cargo space. Refer to “Seats” in “Understanding The Features Of Your Vehicle” for further information.
- An optional front passenger seat with fold flat feature, which extends cargo space even further. Refer to “Seats” in “Understanding The Features Of Your Vehicle” for further information.
- Cargo tie-downs.
- A retractable cargo area cover (if equipped).

Seven Passenger System Features

- A large built-in storage bin with a hinged hardcover located in the floor behind the third-row passenger seats.
- 60/40 split second-row passenger seats with fold flat feature, which allows for extended cargo space. Refer to “Seats” in “Understanding The Features Of Your Vehicle” for further information.
- 50/50 split third-row passenger seats with fold flat feature, which allows for extended cargo space. Refer to “Seats” in “Understanding The Features Of Your Vehicle” for further information.
- An optional front passenger seat with fold flat feature, which extends cargo space even further. Refer to “Seats” in “Understanding The Features Of Your Vehicle” for further information.
- Cargo tie-downs.

Cargo Tie-Downs

WARNING!

Cargo tie-downs are not safe anchors for a child seat tether strap. In a sudden stop or collision, a tie-down could pull loose and allow the child seat to come loose. A child could be badly injured. Use only the anchors provided for child seat tethers.

Cargo tie-downs are located on both rear trim panels. These tie-downs should be used to secure loads safely when the vehicle is moving.

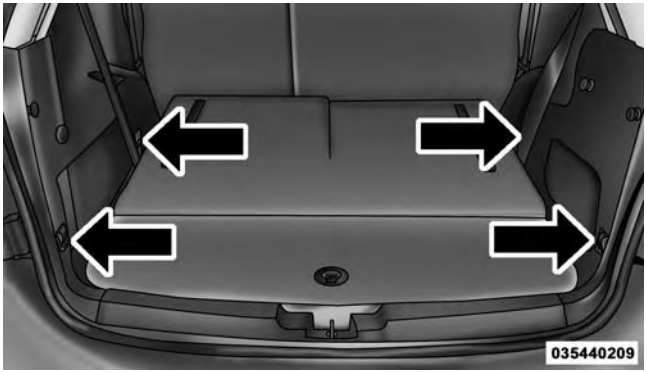

Cargo Tie-Downs

WARNING!

The weight and position of cargo and passengers can change the vehicle center of gravity and vehicle

(Continued)

WARNING! *(Continued)*

handling. To avoid loss of control resulting in personal injury, follow these guidelines for loading your vehicle:

- Do not carry loads that exceed the load limits described on the label attached to the left door or left door center pillar.
- Always place cargo evenly on the cargo floor. Put heavier objects as low and as far forward as possible.
- Place as much cargo as possible in front of the rear axle. Too much weight or improperly placed weight over or behind the rear axle can cause the vehicle to sway.
- Do not pile luggage or cargo higher than the top of the seatback. This could impair visibility or become a dangerous projectile in a sudden stop or collision.
- To help protect against personal injury, passengers should not be seated in the rear cargo area. The rear cargo space is intended for load carrying purposes only, not for passengers, who should sit in seats and use seat belts.

Retractable Cargo Area Cover (If Equipped) — Five Passenger Models

NOTE: The purpose of this cover is for privacy, not to secure loads. It will not prevent cargo from shifting or protect passengers from loose cargo.

The removable retractable cargo area cover mounts in the cargo area behind the top of the rear seats.

The cover, when extended, covers the cargo area to keep items out of sight. Notches in the trim panels near the liftgate opening secure the extended cover in place.

The cover rolls away neatly inside its housing when not in use. You can also remove the cover from the vehicle to make more room in the cargo area.

To install the cover, position it in the vehicle so that the flat side of the housing faces upward. Then, insert either the left or the right spring-loaded post (located on the ends of the cover housing) into the left attachment point or the right attachment point (shown).

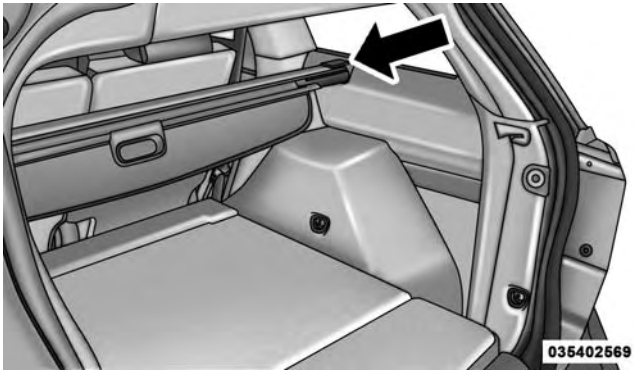

Installing Retractable Cargo Area Cover

Insert the spring-loaded post on the opposite end of the cover housing into the attachment point on the opposite side of the vehicle.

Grab the cover handle and pull it toward you. As the cover nears the liftgate opening, guide the rear attachment posts (on both ends of the cover) into the notches in

the trim panels. Lower the cover to position the posts into the bottom of the notches and release the handle.

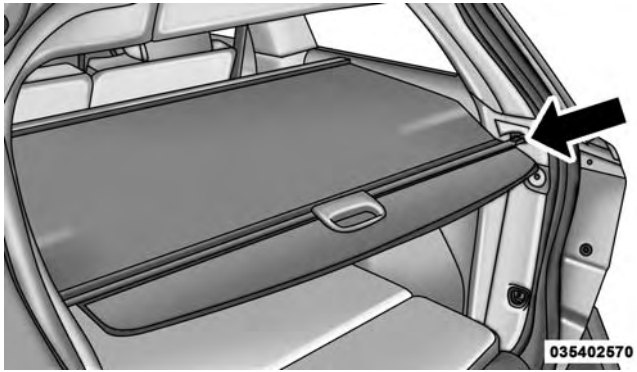

Positioning Retractable Cargo Area Cover

WARNING!

A cargo cover that is unsecured in the vehicle could cause injury in a collision. It could become airborne during a sudden stop and strike someone inside the vehicle. Do not store the cargo cover on the cargo floor or in the passenger compartment. Remove the cover from the vehicle when taken from its mounting. Do not store it in the vehicle.

REAR WINDOW FEATURES

Rear Window Wiper/Washer

The rear window wiper/washer control is located on the left side of the steering column.

Rear Wiper/Washer

Rotate the switch upward to the first detent position for rear wiper operation.

Rotate the switch upward past the first detent position to activate the rear washer. The washer pump will continue to operate as long as the switch is held. Upon release, the wiper will cycle three times before returning to the set position.

Rear Wiper/Washer Control

If the rear wiper is operating when the ignition is turned to the LOCK position, the wiper will automatically return to the “Park” position. When the vehicle is restarted, the

wiper will resume function at whichever position the switch is set at.

CAUTION!

- **Turn the rear wiper off when driving through an automatic car wash. Damage to the rear wiper may result if the rear wiper switch is left in the ON position.**
- **In cold weather, always turn off the rear wiper switch and allow the rear wiper to return to the park position before turning off the engine. If the rear wiper switch is left on and the rear wiper freezes to the window, damage to the rear wiper motor may occur when the vehicle is restarted.**

(Continued)

CAUTION! *(Continued)*

- **Always remove any buildup of snow that prevents the rear wiper blade from returning to the park position. If the rear wiper control is turned off and the blade cannot return to the park position, damage to the rear wiper motor may occur.**

Rear Window Defroster

The rear window defroster button is located on the climate control panel. Press this button to turn on the rear window defroster and the heated outside mirrors (if equipped). An indicator in the button will illuminate when the rear window defroster is on. The rear window defroster automatically turns off after approximately 10 minutes.

NOTE: To prevent excessive battery drain, use the rear window defroster only when the engine is operating.

CAUTION!

Failure to follow these cautions can cause damage to the heating elements:

- **Use care when washing the inside of the rear window. Do not use abrasive window cleaners on the interior surface of the window. Use a soft cloth and a mild washing solution, wiping parallel to the heating elements. Labels can be peeled off after soaking with warm water.**
- **Do not use scrapers, sharp instruments, or abrasive window cleaners on the interior surface of the window.**
- **Keep all objects a safe distance from the window.**

ROOF LUGGAGE RACK — IF EQUIPPED

The roof rack cross rails and side rails are designed to carry cargo weight. The load must not exceed 150 lbs (68 kg), and it should be distributed uniformly over the cross rails. In addition, the roof rack does not increase the total load carrying capacity of the vehicle. Be sure the total load of cargo inside the vehicle plus that on the roof rack does not exceed the maximum vehicle load capacity.

NOTE: The roof rack side rails on your vehicle are NOT designed to carry a load without the addition of cross-bars.

Metal crossbars are offered by MOPAR® accessories to provide a functional roof rack system. See your authorized dealer.

To Move The Crossbars

1. Loosen the knobs on top of each crossbar approximately six turns to disengage the clamp tooth from the side rail.

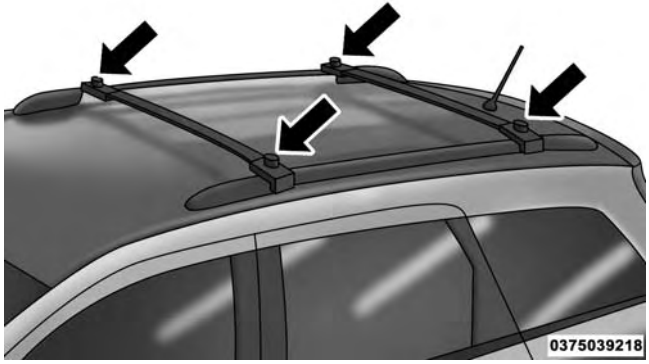

Crossbar Knobs

2. Relocate the crossbars, aligning the crossbar stanchions (end pieces) with one of the vertical marks on the outboard surface of the side rail for proper positioning. There are four frontward marks for the front crossbar and four rearward marks for the rear crossbar. Make sure the crossbars remain equally spaced or parallel at any position for proper function.
3. Tighten the knobs on each crossbar to lock it in position. As you tighten the knob, make sure the clamp tooth engages completely into the side rail slot.
4. Attempt to move the crossbar to ensure that it is locked in position.

NOTE:

- To help control wind noise when installing the crossbars, make sure the arrows marked on the underside of the crossbars face the front of the vehicle.
- To help reduce the amount of wind noise when the crossbars are not in use, fasten the front crossbar in the fourth position from the front and the rear crossbar in

the eighth position. The tie down holes on the crossbar ends should always be used to tie down the load. Check the straps frequently to be sure that the load remains securely attached.

CAUTION!

- **To prevent damage to the roof of your vehicle, DO NOT carry any loads on the roof rack without the crossbars installed. The load should be secured and placed on top of the crossbars, not directly on the roof. If it is necessary to place the load on the roof, place a blanket or other protective layer between the load and the roof surface.**
- **Crossbars should remain equally spaced or parallel at any roof rack position for proper function. Non-compliance could result in damage to the roof rack, cargo, and vehicle.**

(Continued)

CAUTION! ***(Continued)***

- **To avoid damage to the roof rack and vehicle, do not exceed the maximum roof rack load capacity of 150 lb (68 kg). Always distribute heavy loads as evenly as possible and secure the load appropriately.**
- **Long loads, which extend over the windshield, such as wood panels or surfboards, should be secured to both the front and rear of the vehicle.**
- **Travel at reduced speeds and turn corners carefully when carrying large or heavy loads on the roof rack. Wind forces, due to natural causes or nearby truck traffic, can add sudden upward loads. This is especially true on large flat loads and may result in damage to the cargo or your vehicle.**

WARNING!

Cargo must be securely tied before driving your vehicle. Improperly secured loads can fly off the vehicle, particularly at high speeds, resulting in personal injury or property damage. Follow the roof rack cautions when carrying cargo on your roof rack.

UNDERSTANDING YOUR INSTRUMENT PANEL

CONTENTS

- INSTRUMENT PANEL FEATURES 296
- INSTRUMENT CLUSTER 297
- INSTRUMENT CLUSTER DESCRIPTIONS 298
- ELECTRONIC VEHICLE INFORMATION CENTER (EVIC) 307
  - Electronic Vehicle Information Center (EVIC) Displays 309
  - EVIC White Indicators 312
  - EVIC Amber Indicators 312
  - EVIC Red Indicators 313
  - Oil Change Due 315
  - Fuel Economy 316
  - Vehicle Speed 318
  - Trip Info 318
  - Tire PSI. 319
  - Vehicle Info (Customer Information Features) . .319
  - Messages 320
  - Turn Menu OFF. 320
- Uconnect® SETTINGS 320
  - Buttons On The Faceplate. 320

- Buttons On The Touchscreen 320
- Customer Programmable Features — Uconnect® 4.3 Settings 321
- Customer Programmable Features — Uconnect® System 8.4 Settings 333

■ Uconnect® MULTIMEDIA — VIDEO ENTERTAINMENT SYSTEM (VES™) — IF EQUIPPED 347

- Getting Started 348
- Single Video Screen 348
- Play Video Games 349
- Listen To An Audio Source On Channel 2 While A Video Is Playing On Channel 1 350
- Important Notes For Single Video Screen System 351
- Play A DVD Using The Touchscreen Radio . . .352
- VES™ Remote Control — If Equipped 353
- Remote Control Storage 356
- Locking The Remote Control 357
- Replacing The Remote Control Batteries 357
- Headphones Operation 357
- Replacing The Headphone Batteries 358
- Controls 358
- Unwired® Stereo Headphone Lifetime Limited Warranty 359
- System Information 361

■ iPod®/USB/MP3 CONTROL 370

■ STEERING WHEEL AUDIO CONTROLS 370

- Right-Hand Switch Functions 371
- Left-Hand Switch Functions For Radio Operation 371
- Left-Hand Switch Functions For Media (i.e., CD) Operation 371

■ CD/DVD DISC MAINTENANCE 372

■ RADIO OPERATION AND MOBILE PHONES . .372

■ CLIMATE CONTROLS 373

- Manual Climate Controls With Touchscreen — If Equipped 373
- Rear Manual Temperature Control (MTC) — If Equipped 381
- Automatic Temperature Control (ATC) With Touchscreen — If Equipped 386
- Rear Automatic Temperature Control (ATC) — If Equipped 395

INSTRUMENT PANEL FEATURES

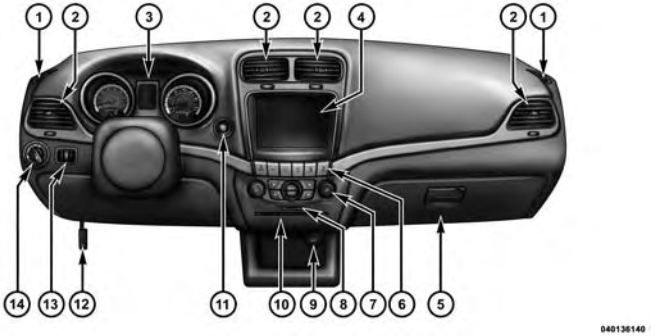

1 — Side Window Demist Outlet
2 — Air Outlet
3 — Instrument Cluster
4 — Uconnect® System
5 — Glove Compartment
6 — Switch Bank
7 — Uconnect® Hard Controls
8 — SD Memory Card Slot
9 — Power Outlet
10 — CD/DVD Slot
11 — Engine Start/Stop Button
12 — Hood Release Lever
13 — Dimmer Controls
14 — Headlight Switch

INSTRUMENT CLUSTER

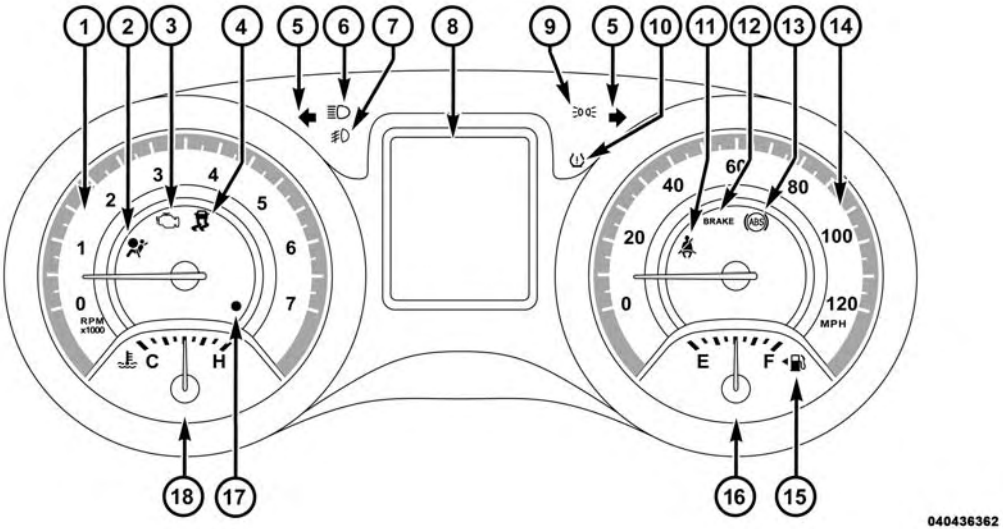

INSTRUMENT CLUSTER DESCRIPTIONS

1. Tachometer

This gauge measures engine revolutions per minute (RPM x 1000). Before the pointer reaches the red area, ease up on the accelerator to prevent engine damage.

2. Air Bag Warning Light

This light will turn on for four to eight seconds as a bulb check when the ignition switch is first turned to ON/RUN. If the light is either not on during starting, stays on, or turns on while driving, have the system inspected at an authorized dealer as soon as possible. Refer to "Occupant Restraints" in "Things To Know Before Starting Your Vehicle" for further information.

3. Malfunction Indicator Light (MIL)

The Malfunction Indicator Light (MIL) is part of an onboard diagnostic system, called OBD II, that monitors engine and automatic transmission control systems. The light will illuminate when the key is in the ON/RUN position, before engine start. If the bulb does not come on when turning the key from OFF to ON/RUN, have the condition checked promptly.

Certain conditions, such as a loose or missing gas cap, poor fuel quality, etc., may illuminate the MIL after engine start. The vehicle should be serviced if the light stays on through several of your typical driving cycles. In most situations, the vehicle will drive normally and will not require towing.

CAUTION!

Prolonged driving with the Malfunction Indicator Light (MIL) on could cause damage to the engine control system. It also could affect fuel economy and driveability. If the MIL is flashing, severe catalytic converter damage and power loss will soon occur. Immediate service is required.

WARNING!

A malfunctioning catalytic converter, as referenced above, can reach higher temperatures than in normal operating conditions. This can cause a fire if you drive slowly or park over flammable substances such as dry plants, wood, cardboard, etc. This could result in death or serious injury to the driver, occupants or others.

4. Electronic Stability Control (ESC) Activation/ Malfunction Indicator Light — If Equipped

If the "ESC Activation/Malfunction Indicator Light" comes on continuously with the engine running, a malfunction has been detected in the ESC system. If this light remains on after several ignition cycles, and the vehicle has been driven several miles (kilometers) at speeds greater than 30 mph (48 km/h), see your authorized dealer as soon as possible to have the problem diagnosed and corrected.

NOTE:

- Each time the ignition is turned to ON/RUN, the ESC system will be ON, even if it was turned off previously.
- The ESC system will make buzzing or clicking sounds when it is active. This is normal; the sounds will stop when ESC becomes inactive following the maneuver that caused the ESC activation.

5. Turn Signal Indicators

The arrow will flash with the exterior turn signal when the turn signal lever is operated.

If the vehicle electronics sense that the vehicle is driven more than 1 mile (1.6 km) with either turn signal on, a continuous chime will sound to alert you to turn the signals off. If either indicator flashes at a rapid rate, check for a defective outside light bulb.

6. High Beam Indicator

This indicator shows that the high beam headlights are on. Push the multifunction lever forward to switch the headlights to high beam, and pull toward yourself (normal position) to return to low beam.

7. Front Fog Light Indicator — If Equipped

This indicator will illuminate when the front fog lights are on.

8. Electronic Vehicle Information Center (EVIC) Display / Odometer Display

Odometer Display The odometer display shows the total distance the vehicle has been driven.

U.S. Federal regulations require that upon transfer of vehicle ownership, the seller certify to the purchaser the correct mileage that the vehicle has been driven. If your odometer needs to be repaired or serviced, the repair technician should leave the odometer reading the same as it was before the repair or service. If s/he cannot do so, then the odometer must be set at zero, and a sticker must be placed in the door jamb stating what the mileage was before the repair or service. It is a good idea for you to make a record of the odometer reading before the repair/service, so that you can be sure that it is properly reset, or that the door jamb sticker is accurate if the odometer must be reset at zero.

Electronic Vehicle Information Center (EVIC) Display

The Electronic Vehicle Information Center (EVIC) features a driver-interactive display that is located in the instrument cluster. For further information, refer to "Electronic Vehicle Information Center (EVIC)".

9. Park/Headlight ON Indicator — If Equipped

This indicator will illuminate when the park lights or headlights are turned on.

10. Tire Pressure Monitoring Telltale Light — If Equipped

Each tire, including the spare (if provided), should be checked monthly when cold and inflated to the inflation pressure recommended by the vehicle manufacturer on the vehicle placard or tire inflation pressure label. (If your vehicle has tires of a different size than the size indicated on the vehicle placard or tire inflation pressure label, you should determine the proper tire inflation pressure for those tires.)

As an added safety feature, your vehicle has been equipped with a Tire Pressure Monitoring System (TPMS) that illuminates a low tire pressure telltale when one or more of your tires is significantly under-inflated. Accordingly, when the low tire pressure telltale illuminates, you should stop and check your tires as soon as possible, and inflate them to the proper pressure. Driving on a significantly under-inflated tire causes the tire to overheat and can lead to tire failure. Under-inflation also reduces fuel efficiency and tire tread life, and may affect the vehicle's handling and stopping ability.

Please note that the TPMS is not a substitute for proper tire maintenance, and it is the driver's responsibility to maintain correct tire pressure, even if under-inflation has not reached the level to trigger illumination of the TPMS low tire pressure telltale.

Your vehicle has also been equipped with a TPMS malfunction indicator to indicate when the system is not operating properly. The TPMS malfunction indicator is combined with the low tire pressure telltale. When the system detects a malfunction, the telltale will flash for approximately one minute and then remain continuously illuminated. This sequence will continue upon subsequent vehicle start-ups as long as the malfunction exists. When the malfunction indicator is illuminated, the system may not be able to detect or signal low tire pressure as intended. TPMS malfunctions may occur for a variety of reasons, including the installation of replacement or alternate tires or wheels on the vehicle that prevent the TPMS from functioning properly. Always check the TPMS malfunction telltale after replacing one or more tires or wheels on your vehicle, to ensure that the replacement or alternate tires and wheels allow the TPMS to continue to function properly.

CAUTION!

The TPMS has been optimized for the original equipment tires and wheels. TPMS pressures and warning have been established for the tire size equipped on your vehicle. Undesirable system operation or sensor damage may result when using replacement equipment that is not of the same size, type, and/or style. Aftermarket wheels can cause sensor damage. Do not use tire sealant from a can or balance beads if your vehicle is equipped with a TPMS, as damage to the sensors may result.

11. Seat Belt Reminder Light

When the ignition switch is first turned to ON/RUN, this light will turn on for four to eight seconds as a bulb check. During the bulb check, if the driver or front passenger's seat belt is unbuckled, a chime will sound. After the bulb check or when driving,

if the driver's seat belt remains unbuckled, the Seat Belt Reminder Light will illuminate and the chime will sound. Refer to "Occupant Restraints" in "Things To Know Before Starting Your Vehicle" for further information.

12. Brake Warning Light

This light monitors various brake functions, including brake fluid level and parking brake application. If the brake light turns on it may indicate that the parking brake is applied, that the brake fluid level is low, or that there is a problem with the anti-lock brake system reservoir.

If the light remains on when the parking brake has been disengaged, and the fluid level is at the full mark on the master cylinder reservoir, it indicates a possible brake hydraulic system malfunction or that a problem with the Brake Booster has been detected by the Anti-Lock Brake System (ABS) / Electronic Stability Control (ESC) system. In this case, the light will remain on until the condition has been corrected. If the problem is related to the brake booster, the ABS pump will run when applying the brake and a brake pedal pulsation may be felt during each stop.

The dual brake system provides a reserve braking capacity in the event of a failure to a portion of the hydraulic system. A leak in either half of the dual brake system is indicated by the Brake Warning Light, which will turn on when the brake fluid level in the master cylinder has dropped below a specified level.

The light will remain on until the cause is corrected.

NOTE: The light may flash momentarily during sharp cornering maneuvers, which change fluid level conditions. The vehicle should have service performed, and the brake fluid level checked.

If brake failure is indicated, immediate repair is necessary.

WARNING!

Driving a vehicle with the red brake light on is dangerous. Part of the brake system may have failed. It will take longer to stop the vehicle. You could have a collision. Have the vehicle checked immediately.

Vehicles equipped with the Anti-Lock Brake System (ABS), are also equipped with Electronic Brake Force Distribution (EBD). In the event of an EBD failure, the Brake Warning Light will turn on along with the ABS Light. Immediate repair to the ABS system is required.

Operation of the Brake Warning Light can be checked by turning the ignition switch from the OFF position to the ON/RUN position. The light should illuminate for approximately two seconds. The light should then turn off unless the parking brake is applied or a brake fault is detected. If the light does not illuminate, have the light inspected by an authorized dealer.

The light also will turn on when the parking brake is applied with the ignition switch in the ON/RUN position.

NOTE: This light shows only that the parking brake is applied. It does not show the degree of brake application.

13. Anti-Lock Brake (ABS) Light

This light monitors the Anti-Lock Brake System (ABS). The light will turn on when the ignition switch is turned to the ON/RUN position and may stay on for as long as four seconds.

If the ABS light remains on or turns on while driving, it indicates that the Anti-Lock portion of the brake system is not functioning and that service is required. However, the conventional brake system will continue to operate normally if the BRAKE warning light is not on.

If the ABS light is on, the brake system should be serviced as soon as possible to restore the benefits of Anti-Lock

brakes. If the ABS light does not turn on when the ignition switch is turned to the ON/RUN position, have the light inspected by an authorized dealer.

14. Speedometer

Indicates vehicle speed.

15. Fuel Door Reminder

The arrow in this symbol is a reminder that the Fuel Filler Door is located on the left side of the vehicle.

16. Fuel Gauge

The pointer shows the level of fuel in the fuel tank when the ignition switch is in the ON/RUN position.

17. Vehicle Security Light — If Equipped

This light will flash at a fast rate for approximately 15 seconds, when the vehicle security alarm is arming, and then will flash slowly until the vehicle is disarmed.

18. Temperature Gauge

The temperature gauge shows engine coolant temperature. Any reading within the normal range indicates that the engine cooling system is operating satisfactorily.

The gauge pointer will likely indicate a higher temperature when driving in hot weather, up mountain grades, or when towing a trailer. It should not be allowed to exceed the upper limits of the normal operating range.

CAUTION!

Driving with a hot engine cooling system could damage your vehicle. If the temperature gauge reads "H" pull over and stop the vehicle. Idle the vehicle with the air conditioner turned off until the pointer drops back into the normal range. If the pointer remains on the "H" and you hear continuous chimes, turn the engine off immediately and call an authorized dealer for service.

WARNING!

A hot engine cooling system is dangerous. You or others could be badly burned by steam or boiling coolant. You may want to call an authorized dealer for service if your vehicle overheats. If you decide to look under the hood yourself, see "Maintaining Your Vehicle". Follow the warnings under the Cooling System Pressure Cap paragraph.

ELECTRONIC VEHICLE INFORMATION CENTER (EVIC)

The Electronic Vehicle Information Center (EVIC) features a driver-interactive display that is located in the instrument cluster.

Electronic Vehicle Information Center (EVIC)

This system allows the driver to select a variety of useful information by pushing the switches mounted on the steering wheel. The EVIC consists of the following:

- Radio Info
- Fuel Economy
- Vehicle Speed
- Trip Info
- Tire Pressure
- Vehicle Information
- Warning Message Displays
- Turn Menu OFF

The system allows the driver to select information by pushing the following buttons mounted on the steering wheel:

EVIC Steering Wheel Buttons

- **UP Button**

△ Push and release the UP button to scroll upward through the main menus and submenus.

- **DOWN Button**

▽ Push and release the DOWN button to scroll downward through the main menus and submenus.

- **SELECT Button**

▷ Push and release the SELECT button for access to main menus or submenus. Push and hold the SELECT button for two seconds to reset features.

- **BACK Button**

BACK Push the BACK button to scroll back to a previous menu.

Electronic Vehicle Information Center (EVIC) Displays

The EVIC display consists of three sections:

1. The top line where compass direction, odometer line and outside temperature are displayed.
2. The main display area where the menus and pop up messages are displayed.
3. The reconfigurable telltales section below the odometer line.

The main display area will normally display the main menu or the screens of a selected feature of the main menu. The main display area also displays "pop up" messages that consist of approximately 60 possible warning or information messages. These pop up messages fall into several categories:

- *Five Second Stored Messages*

When the appropriate conditions occur, this type of message takes control of the main display area for five seconds and then returns to the previous screen. Most of the messages of this type are then stored (as long as the condition that activated it remains active) and can be reviewed from the "Messages" main menu item. As long as there is a stored message, an "i" will be displayed in the EVIC's compass/outside temp line. Examples of this message type are "Right Front Turn Signal Lamp Out" and "Low Tire Pressure".

- *Unstored Messages*

This message type is displayed indefinitely or until the condition that activated the message is cleared. Examples of this message type are "Turn Signal On" (if a turn signal is left on) and "Lights On" (if driver leaves the vehicle).

- ***Unstored Messages Until RUN***

These messages deal primarily with the Remote Start feature. This message type is displayed until the ignition is in the RUN state. Examples of this message type are "Remote Start Aborted - Door Ajar" and "Push Brake Pedal and Push Button to Start".

- ***Five Second Unstored Messages***

When the appropriate conditions occur, this type of message takes control of the main display area for five seconds and then returns to the previous screen. Examples of this message type are "Memory System Unavailable - Not in Park" and "Automatic High Beams On".

The Reconfigurable Telltales section is divided into the white telltales area on the right, amber telltales in the middle, and red telltales on the left.

When the appropriate conditions exist, the EVIC displays the following messages:

- Remote start aborted — Door ajar
- Remote start aborted — Hood ajar
- Remote start aborted — L/Gate ajar
- Remote start aborted — Fuel low
- Remote start disabled — Start Vehicle to Reset
- Remote start active — Push Start Button
- Vehicle Not in Park
- Key Left Vehicle
- Key Not Detected
- Push Brake Pedal and Push Button to Start
- Service Keyless System

- Turn Signal On (with a continuous warning chime if the vehicle is driven more than 1 mile [1.6 km] with either turn signal on)
- Lamp Out (with vehicle graphic showing which of the 4 turn signals is/are out).
- Key Battery Low (with a single chime)
- Left/Right Front Door Ajar (one or more doors open, with a single chime if speed is above 1 mph [1.6 km/ h])
- Low Washer Fluid (with a single chime)
- Low Tire Pressure (with a single chime). Refer to information on “Tire Pressure” and “Tire Pressure Monitor” in “Starting And Operating”
- Service TPM System (with a single chime). Refer to information on “Tire Pressure Monitor” in “Starting And Operating”
- Channel # Transmit
- Channel # Training
- Channel # Trained
- Clearing Channels
- Channels Cleared
- Did Not Train
- Check Gascap (refer to “Adding Fuel” in “Starting And Operating”)
- Oil Change Due (with a single chime)

EVIC White Indicators

This area will show reconfigurable white caution telltales. These telltales include:

- *Shift Lever Status*

The shift lever status "P,R,N,D,L,5,4,3,2,1" are displayed indicating the shift lever position. Telltales "5,4,3,2,1" indicate the Autostick™ feature has been engaged and the gear selected is displayed. For further information on Autostick™ , refer to "Starting And Operating."

- *Electronic Speed Control ON*

This light will turn on when the electronic speed control is ON. For further information, refer to "Electronic Speed Control" in "Understanding The Features Of Your Vehicle."

- *Electronic Speed Control SET*

This light will turn on when the electronic speed control is SET. For further information, refer to "Electronic Speed Control" in "Understanding The Features Of Your Vehicle."

EVIC Amber Indicators

This area will show reconfigurable amber caution telltales. These telltales include:

- *Low Fuel Light*

When the fuel level reaches approximately 3.0 gal (11.0 L) this light will turn on, and remain on until fuel is added.

EVIC Red Indicators

This area will show reconfigurable red telltales. These telltales include:

- *Door Ajar*

This light will turn on to indicate that one or more doors may be ajar.

NOTE: If the vehicle is moving there will also be a single chime.

- *Liftgate Ajar*

This indicator will turn when the liftgate is ajar.

NOTE: If the vehicle is moving there will also be a single chime.

- *Oil Pressure Warning Light*

This light indicates low engine oil pressure. If the light turns on while driving, stop the vehicle and shut off the engine as soon as possible. A chime will sound for four minutes when this light turns on.

Do not operate the vehicle until the cause is corrected. This light does not show how much oil is in the engine. The engine oil level must be checked under the hood.

- *Charging System Light*

This light shows the status of the electrical charging system. The light should come on when the ignition switch is first turned ON/RUN and remain on briefly as a bulb check. If the light stays on or comes on while driving, turn off some of the vehicle's non-essential electrical devices or increase engine speed (if at idle). If the charging system light remains on, it means that the

vehicle is experiencing a problem with the charging system. Obtain SERVICE IMMEDIATELY. See an authorized dealer.

If jump starting is required, refer to “Jump Starting Procedures” in “What To Do In Emergencies”.

- *Electronic Throttle Control (ETC) Light*

This light informs you of a problem with the Electronic Throttle Control (ETC) system. The light will come on when the ignition is first turned to ON/RUN and remain on briefly as a bulb check. If the light does not come on during starting, have the system checked by an authorized dealer.

If a problem is detected, the light will come on while the engine is running. Cycle the ignition key when the vehicle has completely stopped and the shift lever is placed in the PARK position. The light should turn off.

If the light remains lit with the engine running, your vehicle will usually be drivable. However, see an authorized dealer for service as soon as possible. If the light is flashing when the engine is running, immediate service is required. You may experience reduced performance, an elevated/rough idle or engine stall and your vehicle may require towing.

- *Engine Temperature Warning Light*

This light warns of an overheated engine condition. As temperatures rise and the gauge approaches **H,** this indicator will illuminate and a single chime will sound after reaching a set threshold. Further overheating will cause the temperature gauge to pass **H,** the indicator will continuously flash and a continuous chime will occur until the engine is allowed to cool.

If the light turns on while driving, safely pull over and stop the vehicle. If the A/C system is on, turn it off. Also,

shift the transmission into NEUTRAL and idle the vehicle. If the temperature reading does not return to normal, turn the engine off immediately and call for service. Refer to "If Your Engine Overheats" in "What To Do In Emergencies" for more information.

- *Transmission Temperature Warning Light*

This light indicates that the transmission fluid temperature is running hot. This may occur with severe usage, such as trailer towing. If this light turns on, safely pull over and stop the vehicle. Then, shift the transmission into NEUTRAL and run the engine at idle or faster until the light turns off.

CAUTION!

Continuous driving with the Transmission Temperature Warning Light illuminated will eventually cause severe transmission damage or transmission failure.

WARNING!

If you continue operating the vehicle when the Transmission Temperature Warning Light is illuminated you could cause the fluid to boil over, come in contact with hot engine or exhaust components and cause a fire.

Oil Change Due

Your vehicle is equipped with an engine oil change indicator system. The "Oil Change Due" message will flash in the EVIC display for approximately 10 seconds after a single chime has sounded to indicate the next scheduled oil change interval. The engine oil change indicator system is duty cycle based, which means the engine oil change interval may fluctuate dependent upon your personal driving style.

Unless reset, this message will continue to display each time you cycle the ignition to the ON/RUN position. To turn off the message temporarily, push and release the MENU button. To reset the oil change indicator system (after performing the scheduled maintenance), perform the following procedure:

1. Without pushing the brake pedal, push the ENGINE START/STOP button and cycle the ignition to the ON/RUN position (do not start the engine.)
2. Fully depress the accelerator pedal, slowly, three times within 10 seconds.
3. Without pushing the brake pedal, push the ENGINE START/STOP button once to return the ignition to the OFF/LOCK position.

NOTE: If the indicator message illuminates when you start the vehicle, the oil change indicator system did not reset. If necessary, repeat this procedure.

Fuel Economy

Push and release the UP or DOWN button until "Fuel Economy" displays highlighted in the EVIC and push the SELECT button. The following Fuel Economy functions will display in the EVIC:

- Average Fuel Economy
- Distance To Empty (DTE)
- Miles Per Gallon (MPG)

Average Fuel Economy

Shows the average fuel economy since the last reset. When the fuel economy is reset, the display will read "RESET" or show dashes for two seconds. Then, the history information will be erased, and the averaging will continue from the last fuel average reading before the reset.

041041460

Fuel Economy

Distance To Empty (DTE)

Shows the estimated distance that can be traveled with the fuel remaining in the tank. This estimated distance is determined by a weighted average of the instantaneous and average fuel economy, according to the current fuel tank level. DTE cannot be reset through the RIGHT arrow button.

NOTE: Significant changes in driving style or vehicle loading will greatly affect the actual drivable distance of the vehicle, regardless of the DTE displayed value.

When the DTE value is less than 30 miles (48 km) estimated driving distance, the DTE display will change to a “LOW FUEL” message. This display will continue until the vehicle runs out of fuel. Adding a significant amount of fuel to the vehicle will turn off the “LOW FUEL” message and a new DTE value will display.

Miles Per Gallon (MPG)

This display shows the instantaneous MPG in bar graph form while driving. This will monitor the gas mileage in real-time as you drive and can be used to modify driving habits in order to increase fuel economy.

Vehicle Speed

Push and release the UP or DOWN button until "Vehicle Speed" displays highlighted in the EVIC. Push the SELECT button to display the current speed in mph or km/h. Pushing the SELECT button a second time will toggle the unit of measure between mph or km/h.

NOTE: Changing the unit of measure in the Vehicle Speed menu will not change the unit of measure in the EVIC.

Trip Info

Push and release the UP or DOWN button until "Trip Info" displays highlighted in the EVIC and push the SELECT button. Pushing the SELECT button with "Trip Info" highlighted will cause the EVIC display to show Trip A, Trip B, and Elapsed Time all in one display. If you want to reset one of the three functions you use the UP or DOWN buttons to highlight (select) the feature that you want to reset. Pushing the SELECT button will cause the selected feature to reset individually. The three features can only be reset individually. The following Trip functions display in the EVIC:

- Trip A
- Trip B
- Elapsed Time

The Trip Functions mode displays the following information:

Trip A

Shows the total distance traveled for Trip A since the last reset.

Trip B

Shows the total distance traveled for Trip B since the last reset.

Elapsed Time

Shows the total elapsed time of travel since the last reset. Elapsed time will increment when the ignition is in the ON/RUN position.

To Reset The Display

Reset will only occur while a resettable function is being displayed. Push and release the SELECT button once to clear the resettable function.

Tire PSI

Push and release the UP or DOWN button until "Tire PSI:" displays highlighted in the EVIC. Push the SELECT button to view a graphic of the vehicle with a tire pressure value at each corner of the graphic.

Vehicle Info (Customer Information Features)

Push and release the UP or DOWN button until "Vehicle Info" displays in the EVIC and push the SELECT button. Push the UP and DOWN button to scroll through the available information displays.

- *Coolant Temp*

Displays the actual coolant temperature.

- *Oil Temperature*

Displays the actual oil temperature.

- *Oil Pressure*

Displays the actual oil pressure.

- *Trans Temperature*

Displays the actual transmission temperature.

- *Engine Hours*

Displays the number of hours of engine operation.

Messages

Push and release the UP or DOWN button until “Messages: XX” displays highlighted in the EVIC. If there is more than one message, pushing the SELECT button will display a stored warning message. Push and release the UP and DOWN buttons if there is more than one message to step through the remaining stored messages. If there are no message, pushing the SELECT button will do nothing.

Turn Menu OFF

Select from Main Menu using the DOWN button. Pushing the SELECT button blanks the menu display. Pushing any one of the four steering wheel buttons brings the menu back.

Uconnect® SETTINGS

The Uconnect® system uses a combination of buttons on the touchscreen and buttons on the faceplate located on the center of the instrument panel that allows you to access and change the customer programmable features.

Buttons On The Faceplate

Buttons on the faceplate are located on the left and right side of the Uconnect® 4.3 screen. In addition, there is a Scroll/Enter control knob located on the right side of the Climate Controls in the center of the instrument panel. Turn the control knob to scroll through menus and change settings (i.e., 30, 60, 90), push the center of the control knob one or more times to select or change a setting (i.e., ON, OFF).

Buttons On The Touchscreen

Buttons on the touchscreen are accessible on the Uconnect® Touchscreen.

Customer Programmable Features — Uconnect® 4.3 Settings

In this mode the Uconnect® system allows you to access programmable features that may be equipped such as Display, Clock, Safety & Driving Assistance, Lights, Doors & Locks, Heated Seats, Engine Off Operation, Compass Settings, Audio, Phone/Bluetooth® and SIRIUS Setup through buttons on the faceplate and touchscreen.

NOTE: Only one touchscreen area may be selected at a time.

044336083

1 — Uconnect® 4.3 Settings Buttons On The Faceplate

Push the SETTINGS button on the faceplate to access the Settings screen, use the “Page Up” / “Page Down” buttons on the touchscreen to scroll through the following settings. Press the desired setting button on the touchscreen to change the setting using the description shown on the following pages for each setting.

Uconnect® 4.3 Buttons On The Touchscreen

Display

- *Brightness*

Press the "Brightness" button on the touchscreen to change this display. When in this display, you may select display brightness with the headlights on and the headlights off. Adjust the brightness with the "+" and "–" setting buttons on the touchscreen or by selecting any point on the scale between the "+" and "–" buttons on the touchscreen. Then press the back arrow button on the touchscreen.

- *Mode*

Press the "Mode" button on the touchscreen to change this display. When in this display, you may select one of the auto display settings. To change Mode status press the "Day," "Night" or "Auto" button on the touchscreen, then by press the back arrow button on the touchscreen.

- *Language*

Press the "Language" button on the touchscreen to change this display. When in this display, you may select one of three languages for all display nomenclature, including the trip functions and the navigation system (if equipped). Press the "English," "French" (Français) or "Spanish" (Español) button on the touchscreen to select

the language preferred. Then press the back arrow button on the touchscreen. As you continue, the information will display in the selected language.

- *Units*

Press the "Units" button on the touchscreen to change this display. When in this display, you may switch the EVIC, odometer, and navigation system (if equipped) between US and Metric units of measure. Press "US" or "Metric" then press the back arrow button on the touchscreen. As you continue, the information will display in the selected units of measure.

- *Voice Response*

Press the "Voice Response" button on the touchscreen to change the Voice Response Length settings. To change the Voice Response Length, press and release the "Brief" or "Long" button on the touchscreen. Then press the back arrow button on the touchscreen.

- *Touchscreen Beep*

Press the "Touchscreen Beep" button on the touchscreen to turn on or shut off the sound heard when a button on the touchscreen is pressed. To change the Touchscreen Beep setting press and release the "ON" or "OFF" button on the touchscreen, then press the back arrow button on the touchscreen.

Clock

- *Set Time*

Press the "Set Time" button on the touchscreen to change this display. When in this display, you may select the time display settings. To make your selection, press the "Set Time" button on the touchscreen, adjust the hours and minutes using the up and down buttons on the touchscreen, select AM or PM, select 12 hr or 24 hr. Then press the back arrow button on the touchscreen when all selections are complete.

- *Show Time Status*

Press the "Show Time Status" button on the touchscreen to change this display. When in this display, you may turn on or shut off the digital clock in the status bar. To change the Show Time Status setting, press and release the "ON" or "OFF" button on the touchscreen. Then press the back arrow button on the touchscreen.

- *Sync Time — If Equipped*

Press the "Sync Time" button on the touchscreen to change this display. When in this display, you may have the radio set the time automatically. To change the Sync Time setting, press and release the "ON" or "OFF" button on the touchscreen. Then press the back arrow button on the touchscreen.

Safety & Driving Assistance

- *Park Assist*

Press the "Park Assist" button on the touchscreen to change this display. The Rear Park Assist system will scan for objects behind the vehicle when the transmission shift lever is in REVERSE and the vehicle speed is less than 11 mph (18 km/h). The system can be enabled with Sound Only, Sound and Display, or turned OFF. To change the Park Assist status, press and release the "OFF," "Sound Only" or "Sounds and Display" button on the touchscreen. Then press the back arrow button on the touchscreen. Refer to "ParkSense® Rear Park Assist" in "Understanding The Features Of Your Vehicle" for system function and operating information.

- *Hill Start Assist — If Equipped*

Press the "Hill Start Assist" button on the touchscreen to change this display. When this feature is selected, the Hill Start Assist (HSA) system is active. Refer to "Electronic

Brake Control System" in "Starting And Operating" for system function and operating information. To make your selection, press the "Hill Start Assist" button on the touchscreen and select "ON" or "OFF." Then press the back arrow button on the touchscreen.

Lights

- ***Illuminated Approach***

Press the "Illuminated Approach" button on the touchscreen to change this display. When this feature is selected, the headlights will activate and remain on for 0, 30, 60, or 90 seconds when the doors are unlocked with the Remote Keyless Entry (RKE) transmitter. To change the Illuminated Approach status, press the "0," "30," "60" or "90" button on the touchscreen. Then press the back arrow button on the touchscreen.

- ***Headlights With Wipers***

Press the "Headlights With Wipers" button on the touchscreen to change this display. When this feature is selected, and the headlight switch is in the AUTO position, the headlights will turn on approximately 10 seconds after the wipers are turned on. The headlights will also turn off when the wipers are turned off if they were turned on by this feature. To make your selection, press the "Headlights With Wipers" button on the touchscreen and select "ON" or "OFF." Then press the back arrow button on the touchscreen.

- ***Auto High Beams***

Press the "Auto High Beams" button on the touchscreen to change this display. When this feature is selected, the high beam headlights will deactivate automatically under certain conditions. To make your selection, press the "Auto High Beams" button on the touchscreen and select "ON" or "OFF." Then press the back arrow button on the

touchscreen. Refer to "Lights/SmartBeam™ — If Equipped" in "Understanding The Features Of Your Vehicle" for further information.

- ***Daytime Running Lights — If Available***

Press the "Daytime Running Lights" button on the touchscreen to change this display. When this feature is selected, the headlights will turn on whenever the engine is running. To make your selection, press the "Daytime Running Lights" button on the touchscreen and select "ON" or "OFF." Then press the back arrow button on the touchscreen.

- ***Steering Directed Lights — If Equipped***

Press the "Steering Directed Lights" button on the touchscreen to change this display. When this feature is selected, the headlights turn relative to a change in direction of the steering wheel. To make your selection, press the "Steering Directed Lights" button on the touchscreen and select "ON" or 'OFF." Then press the back arrow button on the touchscreen.

- ***Flash Lamps With Lock***

Press the "Flash Lamps With Lock" button on the touchscreen to change this display. When this feature is selected, the exterior lights will flash when the doors are locked with the Remote Keyless Entry (RKE) transmitter. This feature may be selected with or without the sound horn on lock feature selected. To make your selection, press the "Flash Lamps With Lock" button on the touchscreen and select "ON" or "OFF." Then press the back arrow button on the touchscreen.

Doors & Locks

- ***Auto Unlock On Exit***

Press the "Auto Unlock On Exit" button on the touchscreen to change this display. When this feature is selected, all doors will unlock when the vehicle is stopped and the transmission is in the PARK or NEUTRAL position and the driver's door is opened. To make your selection, press the "Auto Unlock On Exit" button on the touchscreen and select "ON" or "OFF." Then press the back arrow button on the touchscreen.

- ***Auto Lock***

When this feature is selected, all doors will lock automatically when the vehicle reaches a speed of 15 mph (24 km/h). To make your selection, press the "Auto Lock" button on the touchscreen, until a check-mark appears next to setting, indicating that the setting has been selected. Press the back arrow button on the touchscreen to return to the previous menu.

- ***Flash Lamps With Lock***

Press the "Flash Lamps With Lock" button on the touchscreen to change this display. When this feature is selected, the exterior lamps will flash when the doors are locked or unlocked with the Remote Keyless Entry (RKE) transmitter. To make your selection, press the "Flash Lights With Lock" button on the touchscreen and select "ON" or "OFF." Then press the back arrow button on the touchscreen.

- ***Sound Horn With Remote Start***

Press the "Sound Horn With Remote Start" button on the touchscreen to change this display. When this feature is selected, the horn will sound when the remote start is activated. To make your selection, press the "Sound Horn With Remote Start" button on the touchscreen and select "ON" or "OFF." Then press the back arrow button on the touchscreen.

- ***Sounds Horn With Lock***

Press the "Sounds Horn With Lock" button on the touchscreen to change this display. When this feature is selected, the horn will chirp when the doors are locked or unlocked with the Remote Keyless Entry (RKE) transmitter. To make your selection, press the "Sounds Horn With Lock" button on the touchscreen and select "ON" or "OFF." Then press the back arrow button on the touchscreen.

- ***Remote Door Unlock Order***

Press the "Remote Door Unlock Order" button on the touchscreen to change this display. When Unlock Driver Door Only On 1st Press is selected, only the driver's door will unlock on the first press of the Remote Keyless Entry (RKE) transmitter UNLOCK button. When Unlock Driver Door Only On 1st Press is selected, you must press the RKE transmitter UNLOCK button twice to unlock the passenger's doors. When Unlock All Doors On 1st Press is selected, all of the doors will unlock on the first press of the RKE transmitter UNLOCK button.

NOTE: If the vehicle is equipped with Keyless Enter-N-Go™ (Passive Entry) and the EVIC is programmed to Unlock All Doors On 1st Press, all doors will unlock no matter which Passive Entry equipped door handle is grasped. If Unlock Driver Door Only On 1st Press is programmed, only the driver's door will unlock when the driver's door is grasped. With Passive Entry, if Unlock Driver Door Only On 1st Press is programmed, pressing the handle more than once will only result in the driver's door opening. If Unlock Driver Door Only On 1st Press is selected, once the driver door is opened, the interior door lock/unlock switch can be used to unlock all the doors (or use the RKE transmitter).

- *Passive Entry (Keyless Enter-N-Go™)*

Press the "Passive Entry" button on the touchscreen to change this display. This feature allows you to lock and unlock the vehicle's door(s) without having to press the RKE transmitter lock or unlock buttons. To make your selection, press the "Passive Entry" button on the touchscreen and select "ON" or "OFF." Then press the back arrow button on the touchscreen. Refer to "Keyless Enter-N-Go™" in "Things To Know Before Starting Your Vehicle".

Auto-On Comfort & Remote Start

- *Auto On Heated Seats — If Equipped*

Press the "Auto On Heated Seats" button on the touchscreen to change this display. When the temperatures are below 40° F (4.4° C) the Driver's heated seat will turn on. To make your selection, press the "Auto On Heated Seats" button on the touchscreen and select "ON" or "OFF." Then press the back arrow button on the touchscreen.

Engine Off Options

- *Headlight Off Delay*

Press the "Headlight Off Delay" button on the touchscreen to change this display. When this feature is selected, the driver can choose to have the headlights remain on for 0, 30, 60, or 90 seconds when exiting the vehicle. To change the Headlight Off Delay status, press the "0," "30," "60" or "90" button on the touchscreen. Then press the back arrow button on the touchscreen.

- *Engine Off Power Delay*

Press the "Engine Off Power Delay" button on the touchscreen to change this display. When this feature is selected, the power window switches, radio, Uconnect® phone system (if equipped), DVD video system (if

equipped), power sunroof (if equipped), and power outlets will remain active for up to 10 minutes after the ignition is cycled to OFF. Opening either front door will cancel this feature. To change the Engine Off Power Delay status, press the "0 seconds," "45 seconds," "5 minutes" or "10 minutes" button on the touchscreen. Then press the back arrow button on the touchscreen.

Compass Settings

- *Variance*

Press the Variance button on the touchscreen to change this display. Compass Variance is the difference between Magnetic North and Geographic North. To compensate for the differences, the variance should be set for the zone where the vehicle is driven, per the zone map. Once properly set, the compass will automatically compensate for the differences, and provide the most accurate compass heading.

NOTE: Keep magnetic materials away from the top of the instrument panel, such as iPod's, Mobile Phones, Laptops and Radar Detectors. This is where the compass module is located, and it can cause interference with the compass sensor, and it may give false readings.

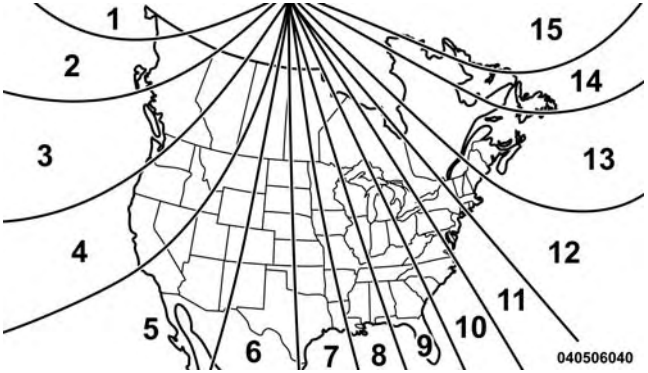

Compass Variance Map

- *Calibration*

Press the "Calibration" button on the touchscreen to change this setting. This compass is self-calibrating, which eliminates the need to manually reset the compass. When the vehicle is new, the compass may appear erratic and the EVIC will display CAL until the compass is calibrated. You may also calibrate the compass by pressing the "ON" button on the touchscreen and completing one or more 360-degree turns (in an area free from large metal or metallic objects) until the CAL indicator displayed in the EVIC turns off. The compass will now function normally.

NOTE: A good calibration requires a level surface and an environment free from large metallic objects such as buildings, bridges, underground cables, railroad tracks, etc.

Audio

- *Equalizer*

Press the "Equalizer" button on the touchscreen to change this display. When in this display, you may adjust the Bass, Mid and Treble settings. Adjust the settings with the "+" and "–" setting buttons on the touchscreen or by selecting any point on the scale between the "+" and "–" buttons on the touchscreen. Then press the back arrow button on the touchscreen.

NOTE: Bass/Mid/Treble allow you to simply slide your finger up or down to change the setting as well as press directly on the desired setting.

- *Balance/Fade*

Press the "Balance/Fade" button on the touchscreen to change this display. When in this display, you may adjust the Balance and Fade settings.

- *Speed Adjusted Volume*

Press the "Speed Adjusted Volume" button on the touchscreen to change this display. This feature increases or decreases volume relative to vehicle speed. To change the Speed Adjusted Volume, press the "OFF," "1," "2" or "3" button on the touchscreen. Then press the back arrow button on the touchscreen.

- *Music Info Cleanup*

This feature helps organize music files for optimized music navigation. To make your selection, press the Music Info Cleanup button on the touchscreen, select "ON" or "OFF" followed by pressing the back arrow button on the touchscreen.

- *Surround Sound — If Equipped*

Press the "Surround Sound" button on the touchscreen to change this display. This feature provides simulated surround sound mode. To make your selection, press the "Surround Sound" button on the touchscreen and select "ON" or "OFF." Then press the back arrow button on the touchscreen.

Phone/Bluetooth®

- *Paired Devices*

This feature shows which phones are paired to the Phone/Bluetooth® system. For further information, refer to the Uconnect® Supplement.

SIRIUS Setup

- *Channel Skip*

SIRIUS can be programmed to designate a group of channels that are the most desirable to listen to or to exclude undesirable channels while scanning. To make your selection, press the "Channel Skip" button on the touchscreen, select the channels you would like to skip. Then press the back arrow button on the touchscreen.

- *Subscription Info*

New vehicle purchasers or lessees will receive a free limited time subscription to SIRIUS Satellite Radio with your radio. Following the expiration of the free services, it will be necessary to access the information on the Subscription Information screen to re-subscribe.

Press the Subscription Info button on the touchscreen to access the Subscription Information screen.

Write down the SIRIUS ID numbers for your receiver. To reactivate your service, either call the number listed on the screen or visit the provider online.

NOTE: SIRIUS Travel Link is a separate subscription.

Customer Programmable Features — Uconnect® System 8.4 Settings

Press the "More" button on the touchscreen, then press the "Settings" button on the touchscreen to display the menu setting screen. In this mode the Uconnect® system allows you to access programmable features that may be equipped such as Display, Clock, Safety/Assistance, Lights, Doors & Locks, Auto-On Comfort & Remote Start, Engine Off Operation, Compass Settings, Audio, Phone/Bluetooth® and SIRIUS Setup.

NOTE: Only one touchscreen area may be selected at a time.

When making a selection, press the button on the touchscreen to enter the desired mode. Once in the desired mode, press and release the preferred setting until a check-mark appears next to the setting, showing that setting has been selected.

Once the setting is complete press the Back Arrow button on the touchscreen to return to the previous menu or press the "X" button on the touchscreen to close out of the settings screen. Pressing the Up or Down Arrow buttons on the touchscreen on the right side of the screen will allow you to toggle up or down through the available settings.

Display

After pressing the Display button on the touchscreen the following settings will be available.

- ***Display Mode***

When in this display you may select one of the auto display settings. To change Mode status, press and release the "Day," "Night" or "Auto" button on the touchscreen. Then press the back arrow button on the touchscreen.

- ***Display Brightness With Headlights ON***

When in this display, you may select the brightness with the headlights on. Adjust the brightness with the "+" and "–" setting buttons on the touchscreen or by selecting any point on the scale between the "+" and "–" buttons on the touchscreen. Then press the back arrow button on the touchscreen.

- ***Display Brightness With Headlights OFF***

When in this display, you may select the brightness with the headlights off. Adjust the brightness with the "+" and "–" setting buttons on the touchscreen or by selecting any point on the scale between the "+" and "–" buttons on the touchscreen. Then press the back arrow button on the touchscreen.

- ***Set Language***

When in this display, you may select one of three languages for all display nomenclature, including the trip

functions and the navigation system (if equipped). Press the "Set Language" button on the touchscreen and then press the desired language button on the touchscreen until a check-mark appears next to the language, showing that setting has been selected. Press the back arrow button on the touchscreen to return to the previous menu.

- *Units*

When in this display, you may select to have the EVIC, odometer, and navigation system (if equipped) changed between US and Metric units of measure. Press "US" or "Metric" until a check-mark appears next to the setting, showing that setting has been selected. Press the back arrow button on the touchscreen to return to the previous menu.

- *Voice Response Length*

When in this display, you may change the Voice Response Length settings. To change the Voice Response Length, press the "Brief" or "Detailed" button on the touchscreen until a check-mark appears next to the setting, showing that setting has been selected. Press the back arrow button on the touchscreen to return to the previous menu.

- *Touchscreen Beep*

When in this display, you may turn on or shut off the sound heard when a button on the touchscreen is pressed. Press the "Touchscreen Beep" button on the touchscreen until a check-mark appears next to the setting, showing that setting has been selected. Press the back arrow button on the touchscreen to return to the previous menu.

- *Navigation Turn-By-Turn In Cluster — If Equipped*

When this feature is selected, the turn-by-turn directions will appear in the display as the vehicle approaches a designated turn within a programmed route. To make your selection, press the "Navigation Turn-By-Turn In

Cluster" button on the touchscreen, until a check-mark appears next to the setting, showing that setting has been selected. Press the back arrow button on the touchscreen to return to the previous menu.

- *Fuel Saver Display In Cluster — If Equipped*

The "ECO" message is located in the instrument cluster display, this message can be turned on or off. To make your selection, press the "Fuel Saver Display" button on the touchscreen, until a check-mark appears next to the setting, showing that setting has been selected. Press the back arrow button on the touchscreen to return to the previous menu.

Clock

After pressing the Clock button on the touchscreen the following settings will be available.

- *Sync With GPS Time — If Equipped*

When in this display, you may automatically have the radio set the time. To change the Sync with GPS Time setting press the "Sync with GPS Time" button on the touchscreen until a check-mark appears next to the setting, indicating that the setting has been selected. Press the back arrow button on the touchscreen to return to the previous menu.

- *Set Time Hours*

When in this display, you may adjust the hours. The "Sync with GPS Time" button on the touchscreen must be unchecked. To make your selection press the "+" or "–" buttons on the touchscreen to adjust the hours up or down. Press the back arrow button on the touchscreen to return to the previous menu or press the "X" button on the touchscreen to close out of the settings screen.

- *Set Time Minutes*

When in this display, you may adjust the minutes. The "Sync with GPS Time" button on the touchscreen must be unchecked. To make your selection press the "+" or "–" buttons on the touchscreen to adjust the minutes up or down. Press the back arrow button on the touchscreen to return to the previous menu or press the "X" button on the touchscreen to close out of the settings screen.

- *Time Format*

When in this display, you may select the time format display setting. Press the "Time Format" button on the touchscreen until a check-mark appears next to the 12hrs or 24hrs setting, indicating that the setting has been selected. Press the back arrow button on the touchscreen to return to the previous menu.

- *Show Time In Status Bar — If Equipped*

When in this display, you may turn on or shut off the digital clock in the status bar. To change the Show Time Status setting press the "Show Time in Status Bar" button on the touchscreen until a check-mark appears next to setting, indicating that the setting has been selected. Press the back arrow button on the touchscreen to return to the previous menu.

Safety & Driving Assistance

After pressing the Safety / Assistance button on the touchscreen the following settings will be available.

- *Park Assist*

The Rear Park Assist system will scan for objects behind the vehicle when the transmission shift lever is in REVERSE and the vehicle speed is less than 11 mph (18 km/h). The system can be enabled with Sound Only, Sound and Display, or turned OFF. To change the Park

Assist status, press and release the "OFF," "Sound Only" or "Sounds and Display" button. Then press the back arrow button on the touchscreen. Refer to "ParkSense® Rear Park Assist" in "Understanding The Features Of Your Vehicle" for system function and operating information.

- ***ParkView® Backup Camera***

Your vehicle may be equipped with the ParkView® Rear Back Up Camera that allows you to see an on-screen image of the rear surroundings of your vehicle whenever the shift lever is put into REVERSE. The image will be displayed on the radio touchscreen display along with a caution note to "check entire surroundings" across the top of the screen. After five seconds, this note will disappear. The ParkView® camera is located on the rear of the vehicle above the rear License plate. To make your selection, press the "ParkView® Backup Camera" button on the touchscreen, until a check-mark appears next to setting, showing that setting has been selected. Press the back arrow button on the touchscreen to return to the previous menu.

- ***Hill Start Assist — If Equipped***

When this feature is selected, the Hill Start Assist (HSA) system is active. Refer to "Electronic Brake Control System" in "Starting And Operating" for system function and operating information. To make your selection, press the "Hill Start Assist" button on the touchscreen, until a check-mark appears next to setting, showing that setting has been selected. Press the back arrow button on the touchscreen to return to the previous menu.

Lights

After pressing the Lights button on the touchscreen the following settings will be available.

- ***Headlights Off Delay***

When this feature is selected, it allows the adjustment of the amount of time the headlights remain on after the engine is shut off. To change the Headlights Off Delay setting, press the "Headlights Off Delay" button on the touchscreen, and choose either 0 sec, 30 sec, 60 sec or 90 seconds. A check-mark appears next to setting indicating that the setting has been selected. Press the back arrow button on the touchscreen to return to the previous menu, or push the back button on the faceplate.

- ***Headlight Illumination On Approach***

When this feature is selected, the headlights will activate and remain on for 0, 30, 60, or 90 seconds when the doors are unlocked with the Remote Keyless Entry (RKE) transmitter. To change the Illuminated Approach status, press the "+" or "–" button on the touchscreen to select your desired time interval. Press the back arrow button on the touchscreen to return to the previous menu.

- ***Headlights With Wipers — If Equipped***

When this feature is selected, and the headlight switch is in the AUTO position, the headlights will turn on approximately 10 seconds after the wipers are turned on. The headlights will also turn off when the wipers are turned off if they were turned on by this feature. To make your selection, press the "Headlights With Wipers" button on the touchscreen, until a check-mark appears next to setting, showing that setting has been selected. Press the back arrow button on the touchscreen to return to the previous menu.

- ***Auto Dim High Beams — If Equipped***

When this feature is selected, the high beam headlights will deactivate automatically under certain conditions. To

make your selection, press the "Auto High Beams" button on the touchscreen, until a check-mark appears next to setting, showing that setting has been selected. Press the back arrow button on the touchscreen to return to the previous menu. Refer to "Lights/SmartBeam™ — If Equipped" in "Understanding The Features Of Your Vehicle" for further information.

- ***Daytime Running Lights — If Equipped***

When this feature is selected, the headlights will turn on whenever the engine is running. To make your selection, press the "Daytime Running Lights" button on the touchscreen, until a check-mark appears next to setting, showing that setting has been selected. Press the back arrow button on the touchscreen to return to the previous menu.

- ***Steering Directed Headlights — If Equipped***

When this feature is selected, the headlights turn relative to a change in direction of the steering wheel. To make your selection, press the "Steering Directed Lights" button on the touchscreen, until a check-mark appears next to setting, showing that setting has been selected. Press the back arrow button on the touchscreen to return to the previous menu.

- ***Flash Lamps With Lock***

When this feature is selected, the exterior lights will flash when the doors are locked with the Remote Keyless Entry (RKE) transmitter. This feature may be selected with or without the sound horn on lock feature selected. To make your selection, press the "Flash Lamps with Lock" button on the touchscreen, until a check-mark appears next to setting, showing that setting has been selected. Press the back arrow button on the touchscreen to return to the previous menu.

Doors & Locks

After pressing the Doors & Locks button on the touchscreen the following settings will be available.

- ***Auto Unlock On Exit***

When this feature is selected, all doors will unlock when the vehicle is stopped and the transmission is in the PARK or NEUTRAL position and the driver's door is opened. To make your selection, press the "Auto Unlock On Exit" button on the touchscreen, until a check-mark appears next to setting, showing that setting has been selected. Press the back arrow button on the touchscreen to return to the previous menu.

- ***Auto Lock***

When this feature is selected, all doors will lock automatically when the vehicle reaches a speed of 15 mph (24 km/h). To make your selection, press the "Auto Lock" button on the touchscreen, until a check-mark appears next to setting, indicating that the setting has been selected. Press the back arrow button on the touchscreen to return to the previous menu.

- ***Flash Headlights With Lock***

When this feature is selected, the signal lights will flash when the doors are locked with the Remote Keyless Entry (RKE) transmitter. To make your selection, press the "Flash Lights With Lock" button on the touchscreen, until a check-mark appears next to setting, showing that setting has been selected. Press the back arrow button on the touchscreen to return to the previous menu.

- ***Sound Horn With Lock***

When this feature is selected, the horn will sound when the remote start is activated. To make your selection, press the "Sound Horn With Lock" button on the touchscreen, until a check-mark appears next to setting, showing that setting has been selected. Press the back arrow button on the touchscreen to return to the previous menu.

- *Sound Horn With Remote Start*

When this feature is selected, the horn will sound when the remote start is activated. To make your selection, press the "Sound Horn With Remote Start" button on the touchscreen, until a check-mark appears next to setting, showing that setting has been selected. Press the back arrow button on the touchscreen to return to the previous menu.

- *1st Press Of Key Fob Unlocks*

When Unlock Driver Door Only On 1st Press is selected, only the driver's door will unlock on the first press of the Remote Keyless Entry (RKE) transmitter UNLOCK button. When Driver Door 1st Press is selected, you must press the RKE transmitter UNLOCK button twice to unlock the passenger's doors. When Unlock All Doors On 1st Press is selected, all of the doors will unlock on the first press of the RKE transmitter UNLOCK button.

NOTE: If the vehicle is programmed to Unlock All Doors 1st Press, all doors will unlock no matter which Passive Entry equipped door handle is grasped. If Driver Door 1st Press is programmed, only the driver's door will unlock when the driver's door is grasped. With Passive Entry, if Driver Door 1st Press is programmed touching the handle more than once will only result in the driver's door opening. If driver door first is selected, once the driver door is opened, the interior door lock/unlock switch can be used to unlock all doors (or use RKE transmitter).

- *Passive Entry*

This feature allows you to lock and unlock the vehicle's door(s) without having to press the Remote Keyless Entry (RKE) transmitter lock or unlock buttons. To make your selection, press the "Passive Entry" button on the touchscreen, until a check-mark appears next to setting, showing that setting has been selected. Press the back

arrow button on the touchscreen to return to the previous menu. Refer to "Keyless Enter-N-Go™" in "Things To Know Before Starting Your Vehicle."

Auto-On Comfort & Remote Start

After pressing the Auto-On Comfort & Remote Start button on the touchscreen the following settings will be available.

- ***Sound Horn With Remote Start***

When this feature is selected, the horn will sound when the remote start is activated. To make your selection, press the "Sound Horn With Remote Start" button on the touchscreen, until a check-mark appears next to setting, showing that setting has been selected. Press the back arrow button on the touchscreen to return to the previous menu.

- ***Auto-On Driver Heated Seat With Vehicle Start — If Equipped***

When this feature is selected the driver's heated seat will automatically turn on when temperatures are below 40° F (4.4° C). To make your selection, press the "Auto On Heated Seats" button on the touchscreen, until a check-mark appears next to setting, showing that setting has been selected. Press the back arrow button on the touchscreen to return to the previous menu.

Engine Off Options

After pressing the "Engine Off Options" button on the touchscreen the following settings will be available.

- ***Engine Off Power Delay***

When this feature is selected, the power window switches, radio, Uconnect® system (if equipped), DVD video system (if equipped), power sunroof (if equipped), and power outlets will remain active for up to 10 minutes

after the ignition is cycled to OFF. Opening either front door will cancel this feature. To change the Engine Off Power Delay status press the “0 seconds,” “45 seconds,” “5 minutes” or “10 minutes” button on the touchscreen. Then press the back arrow button on the touchscreen.

- ***Headlight Off Delay***

When this feature is selected, the driver can choose to have the headlights remain on for 0, 30, 60, or 90 seconds when exiting the vehicle. To change the Headlight Off Delay status press the “+” or “–” button on the touchscreen to select your desired time interval. Press the back arrow button on the touchscreen to return to the previous menu.

Compass Settings

After pressing the Compass Settings button on the touchscreen the following settings will be available.

- ***Variance***

Compass Variance is the difference between Magnetic North and Geographic North. To compensate for the differences the variance should be set for the zone where the vehicle is driven, per the zone map. Once properly set, the compass will automatically compensate for the differences, and provide the most accurate compass heading.

NOTE: Keep magnetic materials away from the top of the instrument panel, such as iPod’s, Mobile Phones, Laptop Computers and Radar Detectors. This is where the compass module is located, and it can cause interference with the compass sensor, and it may give false readings.

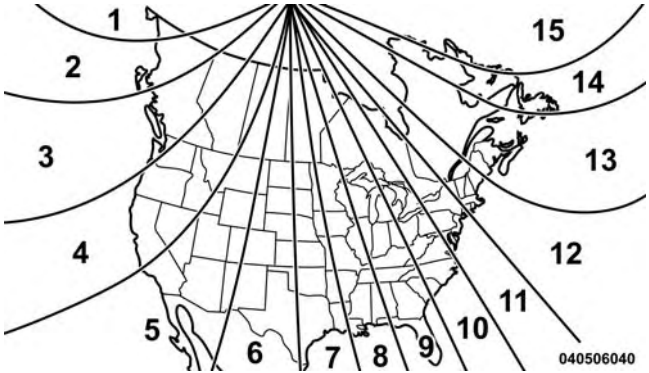

Compass Variance Map

- *Perform Compass Calibration*

Press the "Calibration" button on the touchscreen to change this setting. This compass is self-calibrating, which eliminates the need to manually reset the compass. When the vehicle is new, the compass may appear erratic and it may need to be calibrated. You may also calibrate the compass by pressing the "ON" button on the touchscreen and completing one or more 360-degree turns (in an area free from large metal or metallic objects) until the CAL indicator displayed in the EVIC turns off. The compass will now function normally.

Audio

After pressing the Audio button on the touchscreen the following settings will be available.

- *Balance/Fade*

When in this display you may adjust the Balance and Fade settings.

- *Equalizer*

When in this display you may adjust the Bass, Mid and Treble settings. Adjust the settings with the "+" and "–" setting buttons on the touchscreen or by selecting any

point on the scale between the "+" and "–" buttons on the touchscreen. Then press the back arrow button on the touchscreen.

NOTE: Bass/Mid/Treble allow you to simply slide your finger up or down to change the setting as well as press directly on the desired setting.

- ***Speed Adjusted Volume***

This feature increases or decreases volume relative to vehicle speed. To change the Speed Adjusted Volume press the "Off," "1," "2" or "3" button on the touchscreen. Then press the back arrow button on the touchscreen.

- ***Music Info Cleanup***

This feature helps organize music files for optimized music navigation. To make your selection, press the "Music Info Cleanup" button on the touchscreen, select "On" or "Off" followed by pressing the back arrow button on the touchscreen.

Phone/Bluetooth®

After pressing the "Phone/Bluetooth®" button on the touchscreen the following settings will be available.

- ***Paired Devices***

This feature shows which phones are paired to the Phone/Bluetooth® system. For further information, refer to the Uconnect® Supplement.

SiriusXM Setup

After pressing the "SIRIUS Setup" button on the touchscreen the following settings will be available.

- ***Channel Skip***

SiriusXM can be programmed to designate a group of channels that are the most desirable to listen to or to exclude undesirable channels while scanning. To make your selection, press the "Channel Skip" button on the

touchscreen, select the channels you would like to skip followed by pressing the back arrow button on the touchscreen.

- *Subscription Information*

New vehicle purchasers or lessees will receive a free limited time subscription to SiriusXM Satellite Radio with your radio. Following the expiration of the free services, it will be necessary to access the information on the Subscription Information screen in order to re-subscribe.

Press the Subscription Info button on the touchscreen to access the Subscription Information screen.

Write down the SIRIUS ID numbers for your receiver. To reactivate your service, either call the number listed on the screen or visit the provider online.

NOTE: SiriusXM Travel Link is a separate subscription.

Uconnect® MULTIMEDIA — VIDEO ENTERTAINMENT SYSTEM (VES™) — IF EQUIPPED

Your rear seat Video Entertainment System (VES™) is designed to give your family years of enjoyment. You can play your favorite CDs or DVDs, listen to audio over the wireless headphones, or plug and play a variety of standard video games or audio devices. Please review this Owner's Manual to become familiar with its features and operation.

Getting Started

- **Screen located in the overhead console**: Unfold the overhead LCD screen by pushing the button on the overhead console behind the screen.

Overhead Video Screen

- With the ignition switch in the ON or ACC position, turn the radio on by pushing the ON/OFF Volume Control knob.
- When the Video Screen is open and a DVD is inserted into the radio, the screen turns on automatically, the headphone transmitters turn on and playback begins.

Single Video Screen

NOTE: Typically there are two different ways to operate the features of the Video Entertainment System (VES™).

- The Remote Control
- The Touchscreen Radio (If Equipped)

Play A DVD

1. Press the EJECT button on the radio faceplate (Touchscreen).

2. Insert the DVD with the label facing up. The radio automatically selects the appropriate mode after the disc is recognized and displays the menu screen or starts playing the first track.
3. Ensure the VES™ Remote Control and the Headphone switch is on Channel 1.

Using The Remote Control

1. Push the MODE button on the Remote Control.
2. While looking at the video screen, highlight DISC by either pushing Up/Down/Left/Right buttons or by repeatedly pushing the MODE button, then push ENTER on the Remote Control.

NOTE: The VES™ system will retain the last setting when turned off.

Play Video Games

Connect the video game console to the Auxiliary RCA input jacks located on the back of the center console.

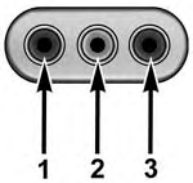

Audio/Video RCA Jacks (AUX Jacks) on the rear of the center console enable the monitor to display video directly from a video camera, connect video games for display on the screen, or play music directly from an MP3 player.

1. Video in (yellow)
2. Left audio in (white)
3. Right audio in (red)

When connecting an external source to the AUX input, be sure to follow the standard color coding for the VES™ jacks:

NOTE: Certain high-end video games, such as Playstation3 and XBox360 will exceed the power limit of the vehicle's Power Inverter. Refer to the Power Inverter section in your vehicle's Owner's Manual for more information.

Ensure the remote control channel selector switch and Headphone switch (IR channel) are the same number.

Using The Remote Control

1. Push the MODE button on the Remote Control.
2. While looking at the video screen, highlight VES AUX 2, by either pushing Up/Down/Left/Right buttons or by repeatedly pushing the MODE button, then push ENTER on the Remote Control.

Using The Touchscreen Radio Controls

1. Press the "MORE" button on the touchscreen.
2. Press the "Rear Entertainment" button on the touchscreen to display the Rear Entertainment Controls.
3. If the Rear Entertainment is turned off, press the "Power" button on the touchscreen.
4. Press the "1" or "2" button on the touchscreen for the channel desired and press the "Source" button on the touchscreen to select the desired mode.

Listen To An Audio Source On Channel 2 While A Video Is Playing On Channel 1

Ensure the Remote Control and Headphone switch is on Channel 2.

Using The Remote Control

1. Push the MODE button on the Remote Control and the Mode Select Screen will display, unless a video is playing then only a small banner will appear on the bottom of the screen.

2. While looking at the video screen, either press Up/Down/Left/Right on the Remote Control to highlight the desired audio source or repeatedly push the MODE button on the remote until the desired audio source appears on the screen.

Using The Touchscreen Radio Controls

1. Press the "MORE" button on the touchscreen.
2. Press the "Rear Entertainment" button on the touchscreen to display the Rear Entertainment Controls.
3. If the Rear Entertainment is turned off, press the "Power" button on the touchscreen.
4. Press the "1" or "2" button on the touchscreen for the channel desired and press the "Source" button on the touchscreen to select the desired mode.

Important Notes For Single Video Screen System

- VES™ is able to transmit two channels of stereo audio simultaneously.
- In split screen mode the left side equates to Channel 1 and right side equates to Channel 2.
- If a video source is selected on Channel 1, then Channel 2 is for audio only.
- When selecting a video source on Channel 1, the video will display on the screen and the audio will be heard on Channel 1 in the headphones.
- Audio can be heard through the headphones even when the Video Screen is closed.

Play A DVD Using The Touchscreen Radio

1. Insert the DVD with the label facing up. The radio automatically selects the appropriate mode after the disc is recognized and displays the menu screen or starts playing the first track.

Using The Remote Control

1. Push the MODE button on the Remote Control.
2. While looking at the Video Screen, highlight DISC by either pushing Up/Down/Left/Right buttons or by repeatedly pushing the MODE button, then push ENTER.

NOTE:

- The VES™ system will retain the last setting when turned off.
- Viewing a DVD on the Touchscreen radio screen is not available in some regions or locations, the vehicle must be stopped, and the shift lever must be in the PARK position for vehicles with automatic transmission. In vehicles with manual transmission the parking brake must be engaged even when the vehicle is parked. Refer to local and state laws.

Using The Touchscreen Radio Controls

1. Press the “MORE” button on the touchscreen.
2. Press the “Rear Entertainment” button on the touchscreen to display the Rear Entertainment Controls.
3. If the Rear Entertainment is turned off, press the “Power” button on the touchscreen.
4. Press the “1” or “2” button on the touchscreen for the channel desired and press the “Source” button on the touchscreen to select the desired mode.

VES™ Remote Control — If Equipped

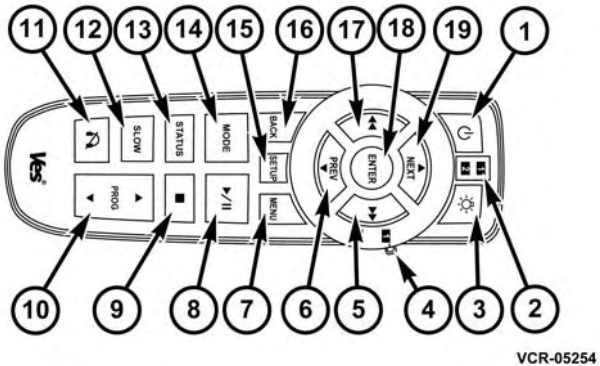

Remote Control

Controls And Indicators

1. Power – Turns the screen and wireless headphone transmitter for the selected Channel on or off. To hear audio while the screen is closed, push the Power button to turn the headphone transmitter on.
2. Channel Selector Indicators – When a button is pushed, the currently affected channel or channel button is illuminated momentarily.
3. Light – Turns the remote control backlighting on or off. The remote backlighting turns off automatically after five seconds.
4. Channel/Screen Selector Switch - Indicates which channel is being controlled by the remote control. When the selector switch is in the Channel 1 position, the remote controls the functionality of headphone Channel 1 (right side of the screen). When the selector

switch is in the Channel 2, position the remote controls the functionality of headphone Channel 2 (left side of the screen).

5. ▶▶ – In radio modes, push to seek the next tunable station. In disc modes, push and hold to fast forward through the current audio track or video chapter. In menu modes use to navigate in the menu.
6. ▼ / Prev – In radio modes, push to select to the previous station. In disc modes, push to advance to the start of the current or previous audio track or video chapter. In menu modes, use to navigate in the menu.
7. MENU – Push to return to the main menu of a DVD disc, to select a satellite audio or video channel from the Station list, or select playback modes (SCAN/RANDOM for a CD).
8. ▶ / ‖ (Play/Pause) – Begin/resume or pause disc play.
9. ▪ (Stop) – Stops disc play.
10. PROG Up/Down – When listening to a radio mode, pushing PROG Up selects the next preset and pushing PROG Down selects the previous preset stored in the radio.
11. MUTE – Push to mute the headphone audio output for the selected channel.
12. SLOW – Push to slow playback of a DVD disc. Push play (▶) to resume normal play.
13. STATUS – Push to display the current status.
14. MODE – Push to change the mode of the selected channel. See the Mode Selection section of this manual for details on changing modes.
15. SETUP – When in a video mode, push the SETUP button to access the display settings (see the display settings section) to access the DVD setup menu, select the menu button on the radio. When a disc is loaded in the DVD player (if equipped) and the VES™ mode

is selected and the disc is stopped, push the SETUP button to access the DVD Setup menu. (see the DVD Setup Menu of this manual.)

16. BACK – When navigating in menu mode, push to return to the previous screen. When navigating a DVDs disc menu, the operation depends on the disc's contents.

17. ◀◀ – In radio modes, push to seek to the previous tunable station. In disc modes, push and hold to fast rewind through the current audio track or video chapter. In menu modes use to navigate in the menu.

18. ENTER – Push to select the highlighted option in a menu.

19. ▲ / NEXT – In radio modes, push to select to the next station. In disc modes, push to advance to the next audio track or video chapter. In menu modes, use to navigate in the menu.

Remote Control Storage

The video screen(s) come with a built in storage compartment for the remote control which is accessible when the screen is opened. To remove the remote, use your index finger to pull and rotate the remote towards you. Do not try to pull the remote straight down as it will be very difficult to remove. To return the remote back into its storage area, insert one long edge of the remote into the two retaining clips first, and then rotate the remote back up into the other two retaining clips until it snaps back into position.

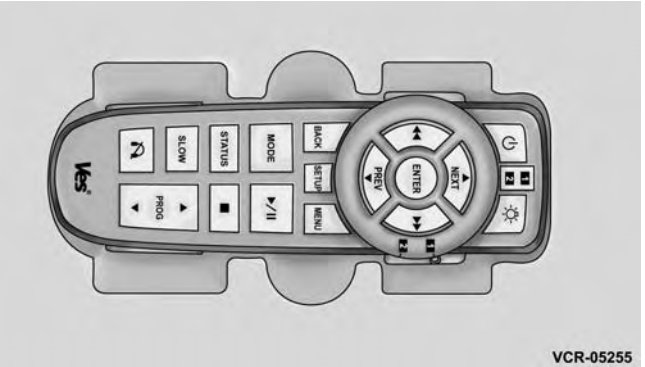

The Remote Control Storage

Locking The Remote Control

All remote control functionality can be disabled as a parental control feature.

1. Press the “MORE” button on the touchscreen.
2. Press the “Rear Entertainment” button on the touchscreen to display the Rear Entertainment Controls.
3. Press the “Lock-out” button on the touchscreen to lock the remote control. Pressing the “Lock-out” button on the touchscreen a second time will unlock the remote control.

NOTE: Remote control lock-out will only apply to the current ignition cycle. The VES™ will automatically remove the lock-out if the ignition is cycled to “OFF”.

Replacing The Remote Control Batteries

The remote control requires two AAA batteries for operation. To replace the batteries:

- Locate the battery compartment on the back of the remote, then slide the battery cover downward.
- Replace the batteries, making sure to orient them according to the polarity diagram shown.
- Replace the battery compartment cover.

Headphones Operation

The headphones receive two separate channels of audio using an infrared transmitter from the video screen.

If no audio is heard after increasing the volume control, verify that the screen is turned on and in the down position and that the channel is not muted and the headphone channel selector switch is on the desired

channel. If audio is still not heard, check that fully charged batteries are installed in the headphones.

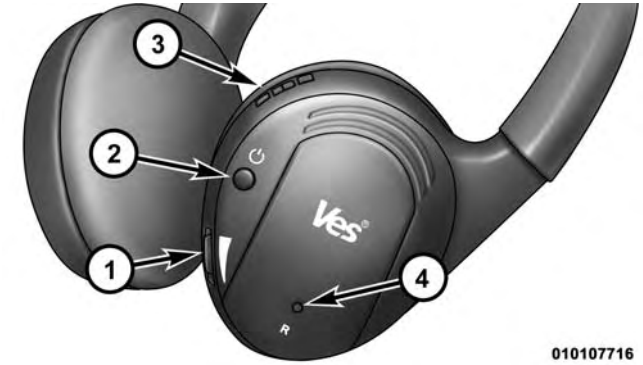

1 — Volume Control
2 — Power Button
3 — Channel Selection Switch
4 — Power Indicator

Replacing The Headphone Batteries

Each set of headphones requires two AAA batteries for operation. To replace the batteries:

- Locate the battery compartment on the left ear cup of the headphones, and then slide the battery cover downward.
- Replace the batteries, making sure to orient them according to the polarity diagram shown.
- Replace the battery compartment cover.

Controls

The headphone power indicator and controls are located on the right ear cup.

NOTE: The rear video system must be turned on before sound can be heard from the headphones. To conserve battery life, the headphones will automatically turn off approximately three minutes after the rear video system is turned off.

Changing The Audio Mode For Headphones

1. Ensure the Remote Control channel/screen selector switch is in the same position as the headphone selector switch.

NOTE:

- When both switches are on Channel 1, the Remote is controlling Channel 1 and the headphones are tuned to the audio of the VES™ Channel 1.
- When both switches are on Channel 2, the Remote is controlling Channel 2 and the headphones are tuned to the audio of the VES™ Channel 2.

2. Push the MODE button on the remote control.
3. If the video screen is displaying a video source (such as a DVD Video), pushing STATUS shows the status on a popup banner at the bottom of the screen. Pushing the MODE button will advance to the next mode. When the mode is in an audio only source (such as FM), the Mode Selection menu appears on screen.
4. When the Mode Selection menu appears on screen, use the cursor buttons on the remote control to navigate to the available modes and push the ENTER button to select the new mode.
5. To cancel out of the Mode Selection menu, push the BACK button on the remote control.

Unwired® Stereo Headphone Lifetime Limited Warranty

Who Does This Warranty Cover? This warranty covers the initial user or purchaser (″you″ or ″your″) of this

particular Unwired Technology LLC ("Unwired") wireless headphone ("Product"). The warranty is not transferable.

How Long Does The Coverage Last? This warranty lasts as long as you own the Product.

What Does This Warranty Cover? Except as specified below, this warranty covers any Product that in normal use is defective in workmanship or materials.

What Does This Warranty Not Cover? This warranty does not cover any damage or defect that results from misuse, abuse or modification of the Product other than by Unwired. Foam earpieces, which will wear over time through normal use, are specifically not covered (replacement foam is available for a nominal charge). UNWIRED TECHNOLOGY IS NOT LIABLE FOR ANY INJURIES OR DAMAGES TO PERSONS OR PROPERTY RESULTING FROM THE USE OF, OR ANY FAILURE OR DEFECT IN, THE PRODUCT, NOR IS UNWIRED LIABLE FOR ANY GENERAL, SPECIAL, DIRECT, INDIRECT, INCIDENTAL, CONSEQUENTIAL, EXEMPLARY, PUNITIVE OR OTHER DAMAGES OF ANY KIND OR NATURE WHATSOEVER. Some states and jurisdictions may not allow the exclusion or limitation of incidental or consequential damages, so the above limitation may not apply to you. This warranty gives you specific legal rights. You may also have other rights, which vary from jurisdiction to jurisdiction.

What Will Unwired® Do? Unwired®, at its option, will repair or replace any defective Product. Unwired® reserves the right to replace any discontinued Product with a comparable model. THIS WARRANTY IS THE SOLE WARRANTY FOR THIS PRODUCT, SETS FORTH YOUR EXCLUSIVE REMEDY REGARDING DEFECTIVE PRODUCTS, AND IS IN LIEU OF ALL OTHER WARRANTIES (EXPRESS OR IMPLIED), INCLUDING ANY WARRANTY OR MERCHANTABILITY OR FITNESS FOR A PARTICULAR PURPOSE.

If you have any questions or comments regarding your Unwired® wireless headphones, please phone 1-888-293-3332 or email customersupport@unwiredtechnology.com.

You may register your Unwired® wireless headphones online at www.unwiredtechnology.com or by phone at 1-888-293-3332.

System Information

Information Mode Display

0456012192

When information mode is active, the current mode setting for both audio channels is displayed. In addition

to the items called out by number, the remaining information displays the current status of the source (such as station frequency, name, preset or track number, song title, artist name, album name, etc.).

1. Channel 1 Mode – Displays the current source for Channel 1.
2. Channel 1 Audio Only/Mute — Audio: The audio only icon is not used on Channel 1, in a single screen system. Mute: when the Mute icon is displayed, the audio for Channel 1 has been muted using the remote control's MUTE button.
3. Channel 2 Audio Only/Mute — Audio: Only in a single screen system: The audio only icon is displayed on Channel 2 when Channel 1 is in a video mode. Mute: when the Mute icon is displayed, the audio for Channel 2 has been muted using the remote control's MUTE button.
4. Channel 2 Mode — Displays the current source for Channel 2.
5. Remote Locked Out—When the icon is displayed, the remote control functions are disabled.
6. Clock — Displays the time.
7. Channel 1 Shared Status — When the icon is displayed, the audio for Channel 1 is also shared with the radio and playing through the cabin speakers.

Numeric Keypad Menu

Numeric Keypad Menu

When the display for either Channel 1 or Channel 2 shows DIRECT TUNE, pushing the remote control's ENTER button activates a numeric keypad menu. This screen makes it easy to enter a specific tuner frequency or track number. To enter the desired digit:

1. Push the remote control's navigation buttons (▲, ▼, ►, ◄) to navigate to the desired digit.
2. When the digit is highlighted, push the remote control's ENTER button to select the digit. Repeat these steps until all digits are entered.
3. To delete the last digit, navigate to the Del button and push the remote control's ENTER button.
4. After all of the digits are entered, navigate to the Go button and push the remote control's ENTER button.

Station List Menu

When listening to Satellite audio, pushing the remote control's MENU button displays a list of all available channels. Navigate this list using the remote control's navigation buttons to find the desired station, push the remote control's ENTER button to tune to that station. To jump through the list more quickly, navigate to the Page Up and Page Down icons on the screen.

Disc Menu

When listening to a CD Audio or CD Data disc, pushing the remote control's MENU button displays a list of all commands which control playback of the disc. Using the options you can activate or cancel Random play.

Options Menu

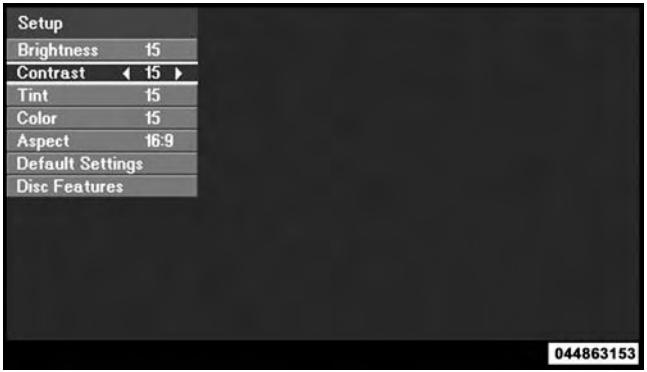

When watching a video source (DVD Video with the disc in Play mode, Aux Video, etc.), pressing the "Options" button on the touchscreen activates the Options Settings menu. From this menu you can adjust Audio, Subtitles, Angle and Title.

Display Settings

When watching a video source (DVD Video with the disc in Play mode, Aux Video, etc.), pushing the remote control's SETUP button activates the Display Settings menu. These settings control the appearance of the video on the screen. The factory default settings are already set for optimum viewing, so there is no need to change these settings under normal circumstances.

To change the settings, push the remote control's navigation buttons to select an item, then push the remote control's navigation buttons to change the value for the currently selected item. To reset all values back to the original settings, select the Default Settings menu option and push the remote control's ENTER button.

Listening To Audio With The Screen Closed

To listen to only audio portion of the channel with the screen closed:

- Set the audio to the desired source and channel.
- Close the video screen.
- To change the current audio mode, push the remote control's MODE button. This will automatically select the next available audio mode without using the MODE/SOURCE Select menu.

If the screen is closed and there is no audio heard, verify that the headphones are turned on (the ON indicator is illuminated) and the headphone selector switch is on the desired channel. If the headphones are turned on, push the remote control's power button to turn audio on. If audio is still not heard, check that fully charged batteries are installed in the headphones.

Disc Formats

The DVD player is capable of playing the following types of discs (12 cm or 8 cm diameter):

- DVD-Video discs (MPEG-2 video compression) (see notes about DVD Region Codes)
- Audio Compact Discs (CDs)
- CD Data discs with MP3 and WMA compressed audio format files
- Video CDs (MPEG-1 video compression)

DVD Region Codes

The DVD player and many DVD discs are coded by geographic region. These region codes must match in order for the disc to play. If the region code for the DVD disc does not match the region code for the player, the disc will stop playing and a warning will be displayed.

DVD Audio Support

When a DVD-Audio disc is inserted in the DVD player, the DVD-Audio title on the disc is played by default (most DVD-Audio discs also have a Video title, but the Video title is ignored). All multi-channel program material is automatically mixed down to two channels, which may result in a lowered apparent volume level. If you increase the volume level to account for this change in level, remember to lower the volume before changing the disc or to another mode.

Recorded Discs

The DVD player will play CD-R and CD-RW discs recorded in CD-Audio or Video-CD format, or as a CD-ROM containing MP3 or WMA files. The player will also play DVD-Video content recorded to a DVD-R, DVD-RW and DVD-ROM discs.

If you record a disc using a personal computer, there may be cases where the DVD player may not be able to play some or the entire disc, even if it is recorded in a compatible format and is playable on other players. To help avoid playback problems, use the following guidelines when recording discs.

- Open sessions are ignored. Only sessions that are closed are playable.
- For multi-session CDs that contain only multiple CD-Audio sessions, the player will renumber the tracks so each track number is unique.
- For CD Data (or CD-ROM) discs, always use the ISO-9660 (Level 1 or Level 2), Joliet, or UDF format. CD-DA may also be used for PCM Audio contained on CD-Based Data.
- The player recognizes a maximum of 512 files and 99 folders per CD-R and CD-RW disc.
- Mixed media recordable DVD formats will only play the Video_TS portion of the disc.

If you are still having trouble writing a disc that is playable in the DVD player, check with the disc recording software publisher for more information about burning playable discs.

The recommended method for labeling recordable discs (CD-R, CD-RW, DVD-R and DVD-RW) is with a permanent marker. Do not use adhesive labels as they may separate from the disc, become stuck, and cause permanent damage to the DVD player.

Compressed Audio Files (MP3, WMA AND ACC)

The DVD player is capable of playing MP3 (MPEG-1 Audio Layer 3 with data bitrates from 32 to 320 kbit/s, including variable bit rates), WMA (All Standard 8.x, 9.x

Windows Media Audio) and ACC (MPEG-4 audio; sampling frequencies 8 to 48 kHz; mono and stereo) audio files with the from a CD Data disc (usually a CD-R or CD-RW).

- The DVD player always uses the file extension to determine the audio format, so MP3 files must always end with the extension ".mp3" or ".MP3", WMA files must always end with the extension ".wma" or "WMA", and ACC files must end with the extensions ".acc" or ".m4a". To prevent incorrect playback, do not use these extensions for any other types of files.
- For MP3 files, ID3 tag data v1, v1.1, v2 and v2.4 (such as artist name, track title, album, etc.) are supported.
- Any file that is copy protected (such as those downloaded from many online music stores) will not play. The DVD player will automatically skip the file and begin playing the next available file.
- Other compression formats such as AAC, MP3 Pro, Ogg Vorbis, and ATRAC3 will not play. The DVD player will automatically skip the file and begin playing the next available file.
- If you are creating your own files, the recommended fixed bit rate for MP3 files is between 96 and 192Kbps and the recommended fixed bit rate for WMA files is between 64 and 192Kbps. Variable bit rates are also supported. For both formats, the recommended sample rate is either 44.1kHz or 48kHz.
- To change the current file, use the remote control's or DVD player's ▲ button to advance to the next file, or the ▼ button to return to the start of the current or previous file.
- To change the current directory, use the remote control's PROG UP and Down buttons or Rewind/skip back and fast fwd/skip forward.

Disc Errors

If the DVD player is unable to read the disc, a "Disc Error" message is displayed on the Radio display and the disc is automatically ejected. A dirty, damaged, or incompatible disc format are all potential causes for a "Disc Error" message.

If a disc has a damaged track which results in audible or visible errors that persists for 2.0 seconds, the DVD player will attempt to continue playing the disc by skipping forward 1.0 to 3.0 seconds at a time. If the end of the disc is reached, the DVD player will return to the beginning of the disc and attempt to play the start of the first track.

The DVD player may shut down during extremely hot conditions, such as when the vehicle's interior temperature is above 120°F (49°C). When this occurs, the DVD player will display "High Temp" and will shut off the display until a safe temperature is reached. This shutdown is necessary to protect the optics of the DVD player.

Product Agreement

This product incorporates copyright protection technology that is protected by U.S. patents and other intellectual property rights. Use of this copyright protection technology must be authorized by Macrovision, and is intended for home or other limited viewing uses otherwise authorized by Macrovision. Reverse engineering or disassembly is prohibited.

Dolby® Digital and MLP Lossless Manufactured under license from Dolby Laboratories. "Dolby," "MLP Lossless," and the double-D symbol are trademarks of Dolby Laboratories. Confidential unpublished works. Copyright 1992-1997 Dolby Laboratories. All rights reserved.

General Information

This device complies with Part 15 of the FCC rules and RSS 210 of Industry Canada. Operation is subject to the following conditions:

1. This device may not cause harmful interference.
2. This device must accept any interference received, including interference that may cause undesired operation.

iPod®/USB/MP3 CONTROL

This feature allows an iPod® or external USB device to be plugged into the USB port.

iPod® control supports Mini, 4G, Photo, Nano, 5G iPod® and iPhone® devices. Some iPod® software versions may not fully support the iPod® control features. Please visit Apple's website for software updates.

For further information, refer to the Uconnect® Supplement Manual.

STEERING WHEEL AUDIO CONTROLS

The remote sound system controls are located on the rear surface of the steering wheel. The left and right-hand controls are rocker-type switches with a pushbutton in the center of each switch. Reach behind the steering wheel to access the switches.

Remote Sound Controls (Back View Of Steering Wheel)

Right-Hand Switch Functions

- Push the top of the switch to increase the volume.
- Push the bottom of the switch to decrease the volume.
- Push the button in the center of the switch to change modes (i.e., AM, FM, etc.).

Left-Hand Switch Functions For Radio Operation

- Push the top of the switch to SEEK the next listenable station up from the current setting.
- Push the bottom of the switch to SEEK the next listenable station down from the current setting.
- Push the button in the center of the switch to tune to the next preset that you have programmed.

Left-Hand Switch Functions For Media (i.e., CD) Operation

- Push the top of the switch once to listen to the next track.
- Push the bottom of the switch once either to listen to the beginning of the current track or to listen to the beginning of the previous track if it is within eight seconds after the current track begins to play.
- Push the switch up or down twice to listen to the second track, three times to listen to the third track, and so forth.
- Push the button located in the center of the switch to change to the next preset that you have programmed.

CD/DVD DISC MAINTENANCE

To keep a CD/DVD in good condition, take the following precautions:

1. Handle the disc by its edge; avoid touching the surface.
2. If the disc is stained, clean the surface with a soft cloth, wiping from center to edge.
3. Do not apply paper or tape to the disc; avoid scratching the disc.
4. Do not use solvents such as benzene, thinner, cleaners, or anti-static sprays.
5. Store the disc in its case after playing.
6. Do not expose the disc to direct sunlight.
7. Do not store the disc where temperatures may become too high.

NOTE: If you experience difficulty in playing a particular disc, it may be damaged (e.g., scratched, reflective coating removed, a hair, moisture or dew on the disc) oversized, or have protection encoding. Try a known good disc before considering disc player service.

RADIO OPERATION AND MOBILE PHONES

Under certain conditions, the mobile phone being on in your vehicle can cause erratic or noisy performance from your radio. This condition may be lessened or eliminated by relocating the mobile phone antenna. This condition is not harmful to the radio. If your radio performance does not satisfactorily “clear” by the repositioning of the antenna, it is recommended that the radio volume be turned down or off during mobile phone operation when not using Uconnect® (if equipped).

CLIMATE CONTROLS

The air conditioning and heating system is designed to make you comfortable in all types of weather. This system can be operated through either the instrument panel or through the Uconnect® system display.

When the Uconnect® system is in different modes (Radio, Player, Settings, More, etc.) the driver and passenger temperature settings will be indicated at the top of the display.

Manual Climate Controls With Touchscreen — If Equipped

Buttons On The Faceplate

Buttons on the faceplate are located on the left and right side of the Uconnect® 4.3 screen in the center of the instrument panel. There are also buttons on the faceplate located below the Uconnect® touchscreen.

044336084

Uconnect® 4.3 Manual with Touchscreen Climate Button On The Faceplate

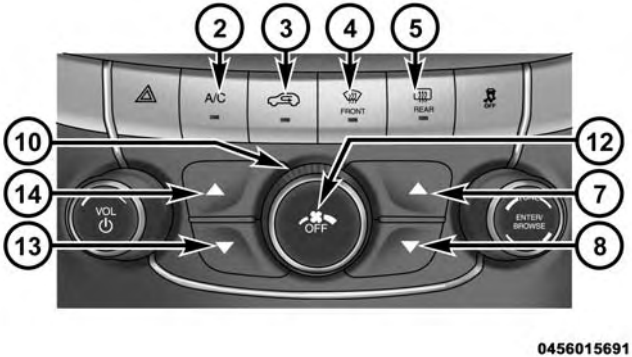

Manual Temperature Controls — Buttons On The Faceplate

Buttons On The Touchscreen

Buttons on the touchscreen are accessible on the Uconnect® system screen.

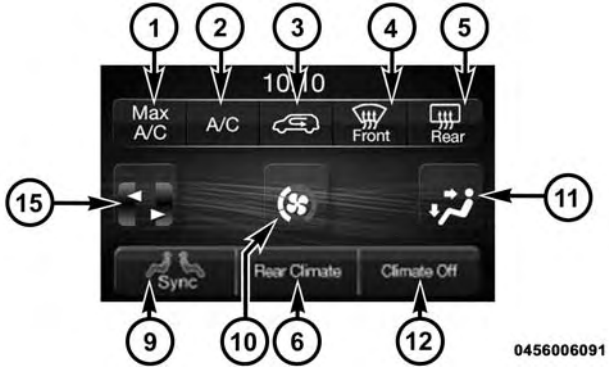

Uconnect® 4.3 Manual 3 — Zone Temperature Controls — Buttons On The Touchscreen

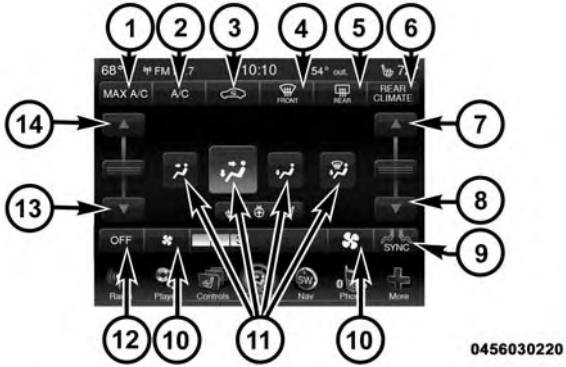

Uconnect® 8.4 Manual 3 — Zone Temperature Controls — Buttons On The Touchscreen

Button Descriptions (Applies To Both Buttons On The Faceplate And Buttons On The Touchscreen)

1. MAX A/C Button

Press and release to change the current setting, the indicator illuminates when MAX A/C is ON. Performing this function again will cause the MAX A/C operation to switch into manual mode and the MAX A/C indicator will turn off.

2. A/C Button

Press and release to change the current setting, the indicator illuminates when A/C is ON. Performing this function again will cause the A/C operation to switch into manual mode and the A/C indicator will turn off.

3. Recirculation Button

Press and release to change the current setting, the indicator illuminates when ON.

4. Front Defrost Button

Press and release to change the current airflow setting to Defrost mode. The indicator illuminates when this feature is ON. Air comes from the windshield and side window demist outlets. When the defrost button is selected, the blower level will increase. Use Defrost mode

with maximum temperature settings for best windshield and side window defrosting and defogging. Performing this function will cause the ATC to switch into manual mode. If the front defrost mode is turned off the climate system will return the previous setting.

5. Rear Defrost Button

Press and release this button to turn on the rear window defroster and the heated outside mirrors (if equipped). An indicator will illuminate when the rear window defroster is on. The rear window defroster automatically turns off after 10 minutes.

CAUTION!

Failure to follow these cautions can cause damage to the heating elements:

(Continued)

CAUTION! *(Continued)*

- **Use care when washing the inside of the rear window. Do not use abrasive window cleaners on the interior surface of the window. Use a soft cloth and a mild washing solution, wiping parallel to the heating elements. Labels can be peeled off after soaking with warm water.**
- **Do not use scrapers, sharp instruments, or abrasive window cleaners on the interior surface of the window.**
- **Keep all objects a safe distance from the window.**

6. Rear Climate Button — If Equipped

Press and release this button to turn on the rear climate controls. The indicator will illuminate when the rear climate controls are ON. Performing this function again will turn OFF the rear climate controls.

7. Passenger Temperature Control Up Button (Uconnect® 8.4 Only)

Provides the passenger with independent temperature control. Push the button for warmer temperature settings.

NOTE: Pressing this button while in Sync mode will automatically exit Sync.

8. Passenger Temperature Control Down Button (Uconnect® 8.4 Only)

Provides the passenger with independent temperature control. Push the button for cooler temperature settings.

NOTE: Pressing this button while in Sync mode will automatically exit Sync.

9. SYNC

Press the Sync button on the touchscreen to toggle the Sync feature On/Off. The Sync indicator is illuminated when this feature is enabled. Sync is used to synchronize the passenger temperature setting with the driver temperature setting. Changing the passenger temperature setting while in Sync will automatically exit this feature.

10. Blower Control

Blower control is used to regulate the amount of air forced through the climate system. There are seven blower speeds available. Adjusting the blower will cause automatic mode to switch to manual operation. The speeds can be selected using either the blower control knob or the buttons on the touchscreen as follows:

Blower Control Knob On The Faceplate

The blower speed increases as you turn the blower control knob clockwise from the lowest blower setting. The blower speed decreases as you turn the blower control knob counterclockwise.

Button On The Touchscreen

Use the small blower icon to reduce the blower setting and the large blower icon to increase the blower setting. Blower can also be selected by pressing the blower bar area between the icons.

11. Modes

The airflow distribution mode can be adjusted so air comes from the instrument panel outlets, floor outlets, and demist outlets. The Mode settings are as follows:

- *Panel Mode*

Air comes from the outlets in the instrument panel. Each of these outlets can be individually adjusted to direct the flow of air. The air vanes of the center outlets and outboard outlets can be moved up and down or side to side to regulate airflow direction. There is a shut off wheel located below the air vanes to shut off or adjust the amount of airflow from these outlets.

- *Bi-Level Mode*

Air comes from the instrument panel outlets and floor outlets. A slight amount of air is directed through the defrost and side window demister outlets.

NOTE: BI-LEVEL mode is designed under comfort conditions to provide cooler air out of the panel outlets and warmer air from the floor outlets.

- *Floor Mode*

Air comes from the floor outlets. A slight amount of air is directed through the defrost and side window demister outlets.

- *Mix Mode*

Air comes from the floor, defrost and side window demist outlets. This mode works best in cold or snowy conditions.

12. Climate Control OFF Button

Press and release this button to turn the Climate Control ON/OFF.

13. Driver Temperature Control Down Button (Uconnect® 8.4 Only)

Provides the driver with independent temperature control. Push the button for cooler temperature settings.

NOTE: In Sync mode, this button will also automatically adjust the passenger temperature setting at the same time.

14. Driver Temperature Control Up Button (Uconnect® 8.4 Only)

Provides the driver with independent temperature control. Push the button for warmer temperature settings.

NOTE: In Sync mode, this button will also automatically adjust the passenger temperature setting at the same time.

15. Temperature Control (Uconnect® 4.3 Only)

Press the driver or passenger temperature button on the touchscreen to regulate the temperature of the air inside the passenger compartment. Moving the temperature bar into the red area, indicates warmer temperatures. Moving the temperature bar into the blue area indicates cooler temperatures. Driver and passenger have independent temperature control if Sync mode is not illuminated.

Climate Control Functions

A/C (Air Conditioning)

The Air Conditioning (A/C) button allows the operator to manually activate or deactivate the air conditioning system. When the air conditioning system is turned on, cool dehumidified air will flow through the outlets into the cabin. For improved fuel economy, press the A/C button to turn off the air conditioning and manually

adjust the blower and airflow mode settings. Also, make sure to select only Panel, Bi-Level or Floor modes.

NOTE:

- For Manual Climate Controls, if the system is in Mix, Floor or Defrost Mode, the A/C can be turned off, but the A/C system shall remain active to prevent fogging of the windows.
- If fog or mist appears on the windshield or side glass, select Defrost mode and adjust blower speed if needed.
- If your air conditioning performance seems lower than expected, check the front of the A/C condenser (located in front of the radiator), for an accumulation of dirt or insects. Clean with a gentle water spray from the front of the radiator and through the condenser.

MAX A/C

MAX A/C sets the control for maximum cooling performance.

Press and release to toggle between MAX A/C and the prior settings. The button on the touchscreen illuminates when MAX A/C is ON.

In MAX A/C, the blower level and mode position can be adjusted to desired user settings. Pressing other settings will cause the MAX A/C operation to switch to the selected setting and MAX A/C to exit.

Recirculation Control

When outside air contains smoke, odors, or high humidity, or if rapid cooling is desired, you may wish to recirculate interior air by pressing the Recirculation control button. The recirculation indicator will illuminate when this button is

selected. Push the button a second time to turn off the Recirculation mode and allow outside air into the vehicle.

NOTE: In cold weather, use of Recirculation mode may lead to excessive window fogging. The Recirculation mode is not allowed in Defrost mode to improve window clearing operation. Recirculation will be disabled automatically if this mode is selected. Attempting to use Recirculation while in this mode will cause the LED on the faceplate to blink and then turn off and the button on the touchscreen to be greyed out.

Rear Manual Temperature Control (MTC) — If Equipped

The rear MTC system has floor air outlets at the rear right side of the 3rd Row seats and overhead outlets at each outboard rear seating position. The system provides heated air through the floor outlets or cool, dehumidified air through the headliner outlets.

The rear system temperature control buttons on the touchscreen are located in the Uconnect® touch system, located on the instrument panel.

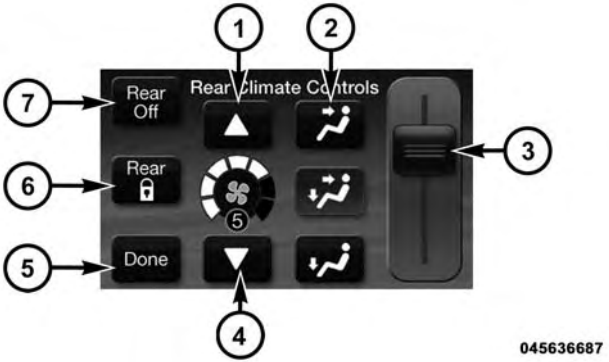

Uconnect® 4.3 Manual Rear Climate Buttons On The Touchscreen Controls Screen

1 — Blower Up Button On The Touchscreen
2 — Mode Button On The Touchscreen
3 — Temperature Button On The Touchscreen
4 — Blower Down Button On The Touchscreen
5 — Done Button On The Touchscreen
6 — Rear Lock Button On The Touchscreen
7 — Rear Off Button On The Touchscreen

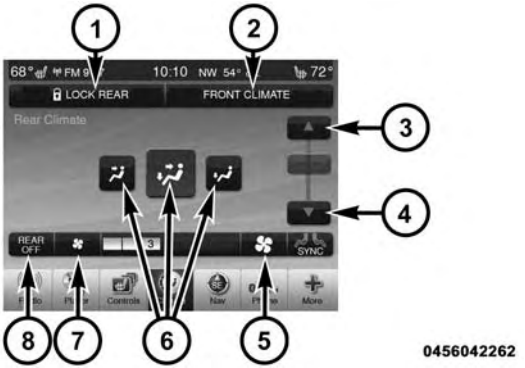

Uconnect® 8.4 Manual Rear Climate Button On The Touchscreen Controls Screen

1 — Rear Lock Button On The Touchscreen
2 — Front Climate Control Button On The Touchscreen
3 — Temperature Up Button On The Touchscreen
4 — Temperature Down Button On The Touchscreen
5 — Blower Up Button On The Touchscreen
6 — Mode Button On The Touchscreen
7 — Blower Down Button On The Touchscreen
8 — Rear Off Button On The Touchscreen

Controlling The Rear Climate Controls From The Front Uconnect® Touchscreen

The Three-Zone climate control system allows for adjustment of the rear climate controls from the front ATC panel.

To change the rear system settings:

- Press "REAR" button to change control to rear control mode, Rear display (below) will appear. Control functions now operate rear system.
- To return to Front screen, press "REAR" button again, or it will revert to the Front screen after six seconds.

Rear Lock

- Pressing the Rear Temperature Lock button on the touchscreen on the Uconnect® touchscreen, illuminates a lock symbol in the rear display. The rear temperature and air source are controlled from the front Uconnect® system.
- Rear occupants can only adjust the rear control when the Rear Temperature Lock button is turned off.
- The rear MTC is located in the headliner, near the center of the vehicle.

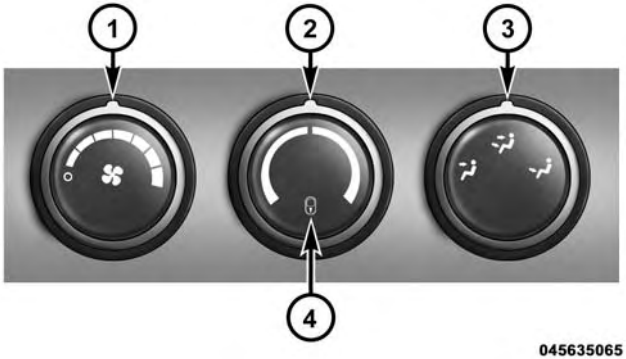

Rear MTC Control Features

1 — Blower Speed
2 — Rear Temperature
3 — Rear MODE
4 — Rear Temperature Lock

Rear Blower Control

The rear blower control knob can be manually set to off, or any fixed blower speed, by rotating the knob from low to high. This allows the rear seat occupants to control the volume of air circulated in the rear of the vehicle.

CAUTION!

Interior air enters the Rear Automatic Temperature Control System through an intake grille, located in the right side trim panel. The rear outlets are located in the right side trim panel. Do not block or place objects directly in front of the inlet grille or heater outlets. The electrical system could overload causing damage to the blower motor.

Rear Temperature Control

To change the temperature in the rear of the vehicle, rotate the temperature knob counterclockwise to lower the temperature, and clockwise to increase the temperature. The rear temperature settings are displayed in the Uconnect® system.

When rear controls are locked by the Uconnect® system, the Rear Temperature Lock symbol on the temperature knob is illuminated and any rear overhead adjustments are ignored.

Rear Mode Control

Headliner Mode

Air comes from the outlets in the headliner. Each of these outlets can be individually adjusted to direct the flow of air. Moving the air vanes of the outlets to one side will shut off the airflow.

Bi-Level Mode

Air comes from both the headliner outlets and the floor outlets.

NOTE: In many temperature positions, the Bi-Level mode is designed to provide cooler air out of the headliner outlets and warmer air from the floor outlets.

Floor Mode

Air comes from the floor outlets.

Automatic Temperature Control (ATC) With Touchscreen — If Equipped

Buttons On The Faceplate

Buttons on the faceplate are located on the left and right side of the Uconnect® 4.3 screen in the center of the instrument panel. There are also buttons on the faceplate located below the Uconnect® touchscreen.

044336084

Uconnect® 4.3 Automatic Climate Button On The Faceplate

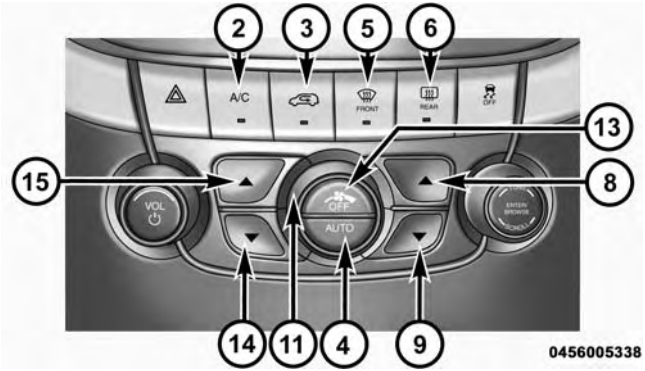

Automatic Temperature Controls — Buttons On The Faceplate

Buttons On The Touchscreen

Buttons On The Touchscreen are accessible on the Uconnect® system screen.

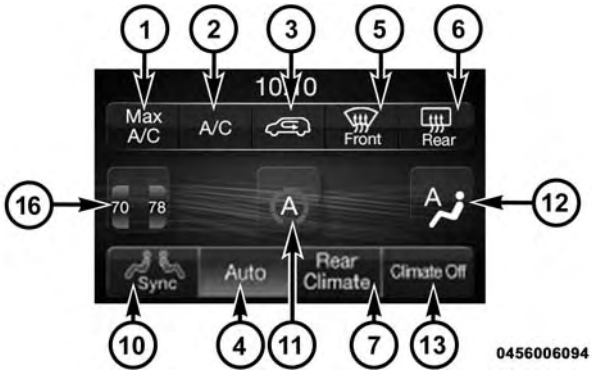

Uconnect® 4.3 Automatic 3 — Zone Temperature Controls — Buttons On The Touchscreen

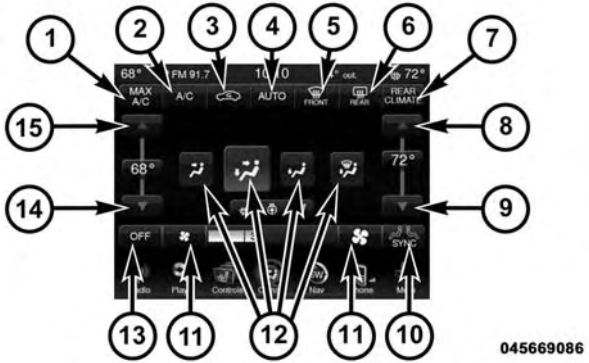

Uconnect® 8.4 Automatic 3 — Zone Temperature Controls — Buttons On The Touchscreen

Button Descriptions (Applies To Both Buttons On The Faceplate And Buttons On The Touchscreen)

1. MAX A/C Button

Press and release to change the current setting, the indicator illuminates when MAX A/C is ON. Performing this function again will cause the MAX A/C operation to switch into manual mode and the MAX A/C indicator will turn off.

2. A/C Button

Press and release to change the current setting, the indicator illuminates when A/C is ON. Performing this function again will cause the A/C operation to switch into manual mode and the A/C indicator will turn off.

3. Recirculation Button

Press and release to change the current setting, the indicator illuminates when ON.

4. AUTO Operation Button

Automatically controls the interior cabin temperature by adjusting airflow distribution and amount. Performing this function will cause the ATC to switch between manual mode and automatic modes. Refer to “Automatic Operation” for more information.

5. Front Defrost Button

Press and release to change the current airflow setting to Defrost mode. The indicator illuminates when this feature is ON. Air comes from the windshield and side window demist outlets. When the defrost button is selected, the blower level will increase. Use Defrost mode with maximum temperature settings for best windshield and side window defrosting and defogging. Performing this function will cause the ATC to switch into manual mode. If the front defrost mode is turned off the climate system will return the previous setting.

6. Rear Defrost Button

Press and release this button to turn on the rear window defroster and the heated outside mirrors (if equipped). An indicator will illuminate when the rear window defroster is on. The rear window defroster automatically turns off after 10 minutes.

CAUTION!

Failure to follow these cautions can cause damage to the heating elements:

- **Use care when washing the inside of the rear window. Do not use abrasive window cleaners on the interior surface of the window. Use a soft cloth and a mild washing solution, wiping parallel to the heating elements. Labels can be peeled off after soaking with warm water.**
- **Do not use scrapers, sharp instruments, or abrasive window cleaners on the interior surface of the window.**
- **Keep all objects a safe distance from the window.**

7. Rear Climate Button — If Equipped

Press and release this button to turn on the rear climate controls. The indicator will illuminate when the rear climate controls are ON. Performing this function again will turn OFF the rear climate controls.

8. Passenger Temperature Control Up Button (Uconnect® 8.4)

Provides the passenger with independent temperature control. Push the button for warmer temperature settings.

NOTE: Pressing this button while in Sync mode will automatically exit Sync.

9. Passenger Temperature Control Down Button (Uconnect® 8.4)

Provides the passenger with independent temperature control. Push the button for cooler temperature settings.

NOTE: Pressing this button while in Sync mode will automatically exit Sync.

10. SYNC

Press the Sync button on the touchscreen to toggle the Sync feature On/Off. The Sync indicator is illuminated when this feature is enabled. Sync is used to synchronize the passenger temperature setting with the driver temperature setting. Changing the passenger temperature setting while in Sync will automatically exit this feature.

11. Blower Control

Blower control is used to regulate the amount of air forced through the climate system. There are seven blower speeds available. Adjusting the blower will cause automatic mode to switch to manual operation. The speeds can be selected using either the blower control knob on the faceplate or the buttons on the touchscreen as follows:

Blower Control Knob On The Faceplate

The blower speed increases as you turn the blower control knob clockwise from the lowest blower setting. The blower speed decreases as you turn the blower control knob counterclockwise.

Buttons On The Touchscreen

Use the small blower icon to reduce the blower setting and the large blower icon to increase the blower setting. Blower can also be selected by pressing the blower bar area between the icons.

12. Modes

The airflow distribution mode can be adjusted so air comes from the instrument panel outlets, floor outlets and demist outlets. The Mode settings are as follows:

- ***Panel Mode***

Air comes from the outlets in the instrument panel. Each of these outlets can be individually adjusted to direct the flow of air. The air vanes of the center outlets and outboard outlets can be moved up and down or side to side to regulate airflow direction. There is a shut off wheel located below the air vanes to shut off or adjust the amount of airflow from these outlets.

- ***Bi-Level Mode***

Air comes from the instrument panel outlets and floor outlets. A slight amount of air is directed through the defrost and side window demister outlets.

NOTE: BI-LEVEL mode is designed under comfort conditions to provide cooler air out of the panel outlets and warmer air from the floor outlets.

- *Floor Mode*

Air comes from the floor outlets. A slight amount of air is directed through the defrost and side window demister outlets.

- *Mix Mode*

Air comes from the floor, defrost and side window demist outlets. This mode works best in cold or snowy conditions.

13. Climate Control OFF Button

Press and release this button to turn the Climate Control ON/OFF.

14. Driver Temperature Control Down Button (Uconnect® 8.4)

Provides the driver with independent temperature control. Push the button for cooler temperature settings.

NOTE: In Sync mode, this button will also automatically adjust the passenger temperature setting at the same time.

15. Driver Temperature Control Up Button (Uconnect® 8.4)

Provides the driver with independent temperature control. Push the button for warmer temperature settings.

NOTE: In Sync mode, this button will also automatically adjust the passenger temperature setting at the same time.

16. Temperature Control (Uconnect® 4.3)

Press the driver or passenger temperature button on the touchscreen to regulate the temperature of the air inside the passenger compartment. Moving the temperature bar into the red area, indicates warmer temperatures. Moving the temperature bar into the blue area indicates cooler temperatures. Driver and passenger have independent temperature control if Sync mode is not illuminated.

Climate Control Functions

A/C (Air Conditioning)

The Air Conditioning (A/C) button allows the operator to manually activate or deactivate the air conditioning system. When the air conditioning system is turned on, cool dehumidified air will flow through the outlets into the cabin. For improved fuel economy, press the A/C button to turn off the air conditioning and manually adjust the blower and airflow mode settings. Also, make sure to select only Panel, Bi-Level or Floor modes.

NOTE: If fog or mist appears on the windshield or side glass, select Defrost mode and adjust blower speed if needed.

MAX A/C

MAX A/C sets the control for maximum cooling performance.

Press and release to toggle between MAX A/C and the prior settings. The button on the touchscreen illuminates when MAX A/C is ON.

In MAX A/C, the blower level and mode position can be adjusted to desired user settings. Pressing other settings will cause the MAX A/C operation to switch to the selected setting and MAX A/C to exit.

Recirculation Control

When outside air contains smoke, odors, or high humidity, or if rapid cooling is desired, you may wish to recirculate interior air by pressing the Recirculation control button. The recirculation indicator will illuminate when this button is selected. Push the button a second time to turn off the Recirculation mode and allow outside air into the vehicle.

NOTE: In cold weather, use of Recirculation mode may lead to excessive window fogging. The Recirculation mode is not allowed in Defrost mode to improve window clearing operation. Recirculation will be disabled automatically if this mode is selected. Attempting to use Recirculation while in this mode will cause the LED on the faceplate to blink and then turn off and the button on the touchscreen to be greyed out.

Automatic Temperature Control (ATC)

Automatic Operation

1. Press the AUTO button on the faceplate or button on the touchscreen button (4) on the Automatic Temperature Control (ATC) Panel.
2. Next, adjust the temperature you would like the system to maintain by adjusting the driver and passenger temperature buttons on the touchscreen or buttons on the faceplate. Once the desired temperature is displayed, the system will achieve and automatically maintain that comfort level.
3. When the system is set up for your comfort level, it is not necessary to change the settings. You will experience the greatest efficiency by simply allowing the system to function automatically.

NOTE:

- It is not necessary to move the temperature settings. The system automatically adjusts the temperature, mode, and blower speed to provide comfort as quickly as possible.
- The temperature can be displayed in U.S. or Metric units by selecting the US/M customer-programmable feature. Refer to the “Uconnect® System Settings” in this section of the manual.

To provide you with maximum comfort in the Automatic mode, during cold start-ups the blower fan will remain on low until the engine warms up. The blower will increase in speed and transition into Auto mode.

Manual Operation Override

The system allows for manual selection of blower speed, air distribution mode, A/C status and recirculation control.

The blower fan speed can be set to any fixed speed by adjusting the blower control. The fan will now operate at a fixed speed until additional speeds are selected. This allows the front occupants to control the volume of air circulated in the vehicle and cancel the Auto mode.

The operator can also select the direction of the airflow by selecting one of the available mode settings. A/C operation and Recirculation control can also be manually selected in Manual operation.

NOTE: Each of these features operates independently from each other. If any feature is controlled manually, temperature control will continue to operate automatically.

Rear Automatic Temperature Control (ATC) — If Equipped

The rear ATC system has floor air outlets at the rear right side of the 3rd Row seats and overhead outlets at each outboard rear seating position. The system provides heated air through the floor outlets or cool, dehumidified air through the headliner outlets.

The rear system temperature control buttons are located in the Uconnect® press system, located on the instrument panel.

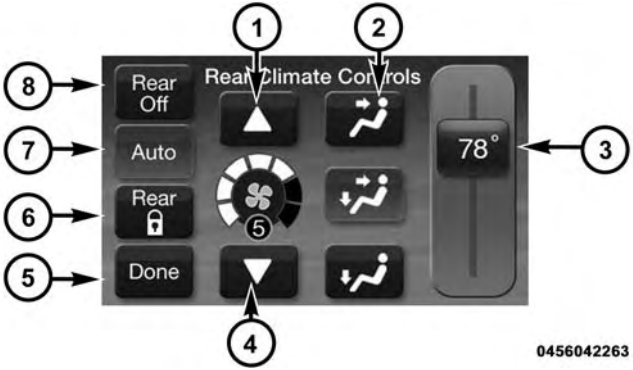

Uconnect® 4.3 Automatic Rear Climate Button On The Touchscreen Controls Screen

1 — Blower Up Button On The Touchscreen
2 — Mode Button On The Touchscreen
3 — Temperature Button On The Touchscreen
4 — Blower Down Button On The Touchscreen
5 — Done Button On The Touchscreen
6 — Rear Lock Button On The Touchscreen
7 — Rear Auto Button On The Touchscreen
8 — Rear Off Button On The Touchscreen

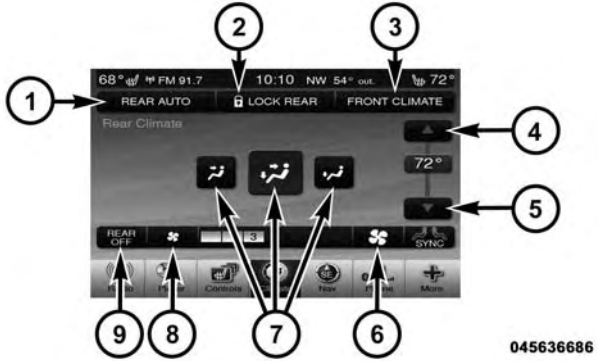

Uconnect® 8.4 Automatic Rear Climate Button On The Touchscreen Controls Screen

1 — Rear Auto Button On The Touchscreen
2 — Rear Lock Button On The Touchscreen
3 — Front Climate Button On The Touchscreen
4 — Temperature Up Button On The Touchscreen
5 — Temperature Down Button On The Touchscreen
6 — Blower Up Button On The Touchscreen
7 — Mode Button On The Touchscreen
8 — Blower Down Button On The Touchscreen
9 — Rear Off Button On The Touchscreen

Controlling The Rear Climate Controls From The Front ATC Panel

The Three-Zone ATC system allows for adjustment of the rear climate controls from the front ATC panel.

To change the rear system settings:

- Press "REAR" button to change control to rear control mode, Rear display (below) will appear. Control functions now operate rear system.
- To return to Front screen, press "REAR" button again, or it will revert to the Front screen after six seconds.

Rear Lock

Pressing the Rear Temperature Lock button on the Uconnect® touchscreen, illuminates a lock symbol in the rear display. The rear temperature and air source are controlled from the front Uconnect® system.

Rear second row occupants can only adjust the rear ATC control when the Rear Temperature Lock button is turned off.

The rear ATC is located in the headliner, near the center of the vehicle.

- Press the Rear Temperature Lock button on the Uconnect® touchscreen. This turns off the Rear Temperature Lock icon in the rear temperature knob.
- Rotate the Rear Blower, Rear Temperature and the Rear Mode Control knobs to suit your comfort needs.
- ATC is selected by adjusting the rear blower knob counterclockwise to AUTO.

Once the desired temperature is displayed, the ATC System will automatically achieve and maintain that comfort level. When the system is set up for your comfort

level, it is not necessary to change the settings. You will experience the greatest efficiency by simply allowing the system to function automatically.

NOTE: It is not necessary to move the temperature settings for cold or hot vehicles. The system automatically adjusts the temperature, mode and fan speed to provide comfort as quickly as possible.

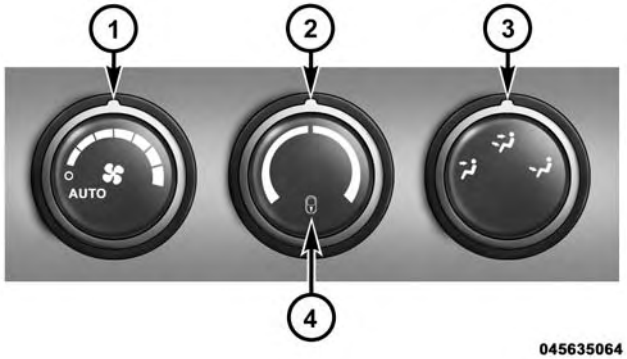

Rear ATC Control Features

1 — Blower Speed	3 — Rear MODE
2 — Rear Temperature	4 — Rear Temperature Lock

Rear Blower Control

The rear blower control knob can be manually set to off, or any fixed blower speed, by rotating the knob from low

to high. This allows the rear seat occupants to control the volume of air circulated in the rear of the vehicle.

CAUTION!

Interior air enters the Rear Automatic Temperature Control System through an intake grille, located in the right side trim panel behind the third row seats. The rear outlets are located in the right side trim panel of the 3rd Row seat. Do not block or place objects directly in front of the inlet grille or heater outlets. The electrical system could overload causing damage to the blower motor.

Rear Temperature Control

To change the temperature in the rear of the vehicle, rotate the temperature knob counterclockwise to lower the temperature, and clockwise to increase the temperature. The rear temperature settings are displayed in the Uconnect® system.

When rear controls are locked by the Uconnect® system, the Rear Temperature Lock symbol on the temperature knob is illuminated and any rear overhead adjustments are ignored.

Rear Mode Control

Auto Mode

- The rear system automatically maintains the correct mode and comfort level desired by the rear seat occupants.

Headliner Mode

Air comes from the outlets in the headliner. Each of these outlets can be individually adjusted to direct the flow of air. Moving the air vanes of the outlets to one side will shut off the airflow.

Bi-Level Mode

Air comes from both the headliner outlets and the floor outlets.

NOTE: In many temperature positions, the BI-LEVEL mode is designed to provide cooler air out of the headliner outlets and warmer air from the floor outlets.

Floor Mode

Air comes from the floor outlets.

Operating Tips

NOTE: Refer to the chart at the end of this section for suggested control settings for various weather conditions.

Summer Operation

The engine cooling system must be protected with a high-quality antifreeze coolant to provide proper corrosion protection and to protect against engine overheating. A solution of 50% OAT (Organic Additive Technology) coolant that meets the requirements of Chrysler Material Standard MS-12106 and 50% water is recommended. Refer to "Maintenance Procedures" in "Maintaining Your Vehicle" for proper coolant selection.

Winter Operation

Use of the air Recirculation mode during winter months is not recommended because it may cause window fogging.

Vacation Storage

Any time you store your vehicle or keep it out of service (i.e., vacation) for two weeks or more, run the air conditioning system at idle for about five minutes in the fresh air and high blower setting. This will ensure adequate system lubrication to minimize the possibility of compressor damage when the system is started again.

Window Fogging

Interior fogging on the windshield can be quickly removed by turning the mode selector to Defrost. The Defrost/Floor mode can be used to maintain a clear windshield and provide sufficient heating. If side window fogging becomes a problem, increase the blower speed. Vehicle windows tend to fog on the inside in mild but rainy or humid weather.

NOTE:

- Recirculation mode without A/C should not be used for long periods, as fogging may occur.
- Automatic Temperature Controls (ATC) will automatically adjust the climate control settings to reduce or eliminate window fogging on the front windshield. When this occurs, recirculation will be unavailable.

Outside Air Intake

Make sure the air intake, located directly in front of the windshield, is free of obstructions such as leaves. Leaves collected in the air intake may reduce airflow, and if they enter the plenum, they could plug the water drains. In winter months, make sure the air intake is clear of ice, slush, and snow.

A/C Air Filter

The climate control system filters outside air containing dust, pollen and some odors. Strong odors cannot be totally filtered out. Refer to “Maintenance Procedures” in “Maintaining Your Vehicle” for filter replacement instructions.

Manual Control Setting Suggestions For Various Weather Conditions

WEATHER	CONTROL SETTINGS
HOT WEATHER AND VEHICLE INTERIOR IS VERY HOT	Open the windows, start the vehicle, set the Mode control to Panel or Bi-Level, and turn on A/C. Set the Fan control to the High position (full clockwise). Set the temperature control to full cool. After the hot air is flushed from the vehicle, set the Mode control to Recirculate with A/C on and roll up the windows. Once you are comfortable, set the Mode control to Panel or Bi-Level with A/C on.
WARM WEATHER	If it's sunny, set the Mode control to Panel and turn on A/C. If it's cloudy or dark, set the Mode control to Bi-Level with A/C on. Adjust Temperature control for comfort.
COOL OR COLD HUMID CONDITIONS	Set the Mode control to Mix or Defrost. Set the Fan Control to the High position (full clockwise). Adjust Fan and Temperature control for comfort if windows are clear.
COLD DRY CONDITIONS	Set the Mode control to Floor. If it's sunny, you may want more upper air. In this case, set the Mode control to Bi-Level. In very cold weather, if you need extra heat at the windshield, set the Mode control to Mix or Defrost as needed. Adjust Fan and Temperature control for comfort. 045636890

STARTING AND OPERATING

CONTENTS

■ STARTING PROCEDURES 408
- □ Automatic Transmission 408
- □ Keyless Enter-N-Go™ 409
- □ Normal Starting. 409
- □ Extreme Cold Weather (Below –20°F Or –29°C) 411
- □ If Engine Fails To Start 411
- □ After Starting 413

■ ENGINE BLOCK HEATER — IF EQUIPPED . . .413

■ AUTOMATIC TRANSMISSION 413
- □ Key Ignition Park Interlock. 415
- □ Brake/Transmission Shift Interlock System . . .415
- □ Four-Speed Or Six-Speed Automatic Transmission 415
- □ Gear Ranges 417

■ AUTOSTICK® 424
- □ Operation 424

■ ALL WHEEL DRIVE (AWD) — IF EQUIPPED . .425

■ DRIVING ON SLIPPERY SURFACES 426
- □ Acceleration 426

- Traction 426

■ DRIVING THROUGH WATER 427

- Flowing/Rising Water 427
- Shallow Standing Water 427

■ POWER STEERING 429

- Power Steering Fluid Check 430

■ PARKING BRAKE 431

■ BRAKE SYSTEM 433

■ ELECTRONIC BRAKE CONTROL SYSTEM 434

- Anti-Lock Brake System (ABS) 434
- Brake Assist System (BAS) 437
- Traction Control System (TCS) 437
- Electronic Roll Mitigation (ERM) 438
- Electronic Stability Control (ESC) 439
- ESC Activation/Malfunction Indicator Light And ESC OFF Indicator Light 441
- Trailer Sway Control (TSC) 442
- Hill Start Assist (HSA) 443

■ TIRE SAFETY INFORMATION 446

- Tire Markings 446
- Tire Identification Number (TIN). 449
- Tire Terminology And Definitions 451
- Tire Loading And Tire Pressure 452

■ TIRES — GENERAL INFORMATION 457

- Tire Pressure 457
- Tire Inflation Pressures 458

- Radial Ply Tires 460
- All Season Tires — If Equipped. 461
- Summer Or Three Season Tires — If Equipped. 461
- Snow Tires 462
- Spare Tire Matching Original Equipped Tire And Wheel — If Equipped 462
- Compact Spare Tire — If Equipped 462
- Full Size Spare — If Equipped 463
- Limited-Use Spare — If Equipped 464
- Tire Spinning 464
- Tread Wear Indicators 465
- Life Of Tire 466
- Replacement Tires 466

■ TIRE CHAINS (TRACTION DEVICES) 468

■ TIRE ROTATION RECOMMENDATIONS 469

■ TIRE PRESSURE MONITOR SYSTEM (TPMS) . .470

- Base System 473
- Premium System — If Equipped 476
- General Information 480

■ FUEL REQUIREMENTS 480

- Reformulated Gasoline 481
- Gasoline/Oxygenate Blends 481
- E-85 Usage In Non-Flex Fuel Vehicles 482
- MMT In Gasoline 482
- Materials Added To Fuel 483
- Fuel System Cautions. 483

- Carbon Monoxide Warnings 484

■ FLEXIBLE FUEL (3.6L ENGINE ONLY) — IF EQUIPPED 485

- E-85 General Information 485
- Ethanol Fuel (E-85) 486
- Fuel Requirements 486
- Selection Of Engine Oil For Flexible Fuel Vehicles (E-85) And Gasoline Vehicles 487
- Starting 488
- Cruising Range 488
- Replacement Parts 488
- Maintenance 488

■ ADDING FUEL 489

- Fuel Filler Cap (Gas Cap) 489
- Loose Fuel Filler Cap Message 491

■ VEHICLE LOADING 491

- Vehicle Certification Label 491
- Gross Vehicle Weight Rating (GVWR) 492
- Gross Axle Weight Rating (GAWR) 492
- Overloading 492
- Loading 493

■ TRAILER TOWING 493

- Common Towing Definitions 493
- Trailer Hitch Classification 496
- Trailer Towing Weights (Maximum Trailer Weight Ratings) 497
- Trailer And Tongue Weight 498

□ Towing Requirements 499
□ Towing Tips 505
■ RECREATIONAL TOWING (BEHIND MOTORHOME, ETC.) 507
□ Towing This Vehicle Behind Another Vehicle . .507

STARTING PROCEDURES

Before starting your vehicle, adjust your seat, adjust the inside and outside mirrors, fasten your seat belt, and if present, instruct all other occupants to buckle their seat belts.

WARNING!

- **When leaving the vehicle, always make sure the ignition is in the OFF position, remove the Key Fob from the vehicle, and lock the vehicle.**
- **Never leave children alone in a vehicle, or with access to an unlocked vehicle. Leaving children in a vehicle unattended is dangerous for a number of reasons. A child or others could be seriously or fatally injured. Children should be warned not to touch the parking brake, brake pedal or the transmission gear selector.**

(Continued)

WARNING! ***(Continued)***

- **Do not leave the Key Fob in or near the vehicle (or in a location accessible to children), and do not leave the ignition (of a vehicle equipped with Keyless Enter-N-Go™) in the ACC or ON/RUN mode. A child could operate power windows, other controls, or move the vehicle.**

Automatic Transmission

The shift lever must be in the NEUTRAL or PARK position before you can start the engine. Apply the brakes before shifting into any driving gear.

CAUTION!

Damage to the transmission may occur if the following precautions are not observed:

- **Do not shift from REVERSE, PARK, or NEUTRAL into any forward gear when the engine is above idle speed.**
- **Shift into PARK only after the vehicle has come to a complete stop.**
- **Shift into or out of REVERSE only after the vehicle has come to a complete stop and the engine is at idle speed.**
- **Before shifting into any gear, make sure your foot is firmly on the brake pedal.**

Keyless Enter-N-Go™

This feature allows the driver to operate the ignition switch with the push of a button, as long as the Remote Start/Keyless Enter-N-Go™ Key Fob is in the passenger compartment.

Normal Starting

Using The ENGINE START/STOP Button

1. The transmission must be in PARK or NEUTRAL.
2. Press and hold the brake pedal while pushing the ENGINE START/STOP button once.
3. The system takes over and attempts to start the vehicle. If the vehicle fails to start, the starter will disengage automatically after 10 seconds.

4. If you wish to stop the cranking of the engine prior to the engine starting, push the button again.

NOTE: Normal starting of either a cold or a warm engine is obtained without pumping or pressing the accelerator pedal.

To Turn Off The Engine Using ENGINE START/STOP Button

1. Place the shift lever/gear selector in PARK, then press and release the ENGINE START/STOP button.
2. The ignition switch will return to the OFF position.
3. If the shift lever/gear selector is not in PARK, the ENGINE START/STOP button must be held for two seconds or three short presses in a row with the vehicle speed above 5 mph (8 km/h) before the engine will shut off. The ignition switch position will remain in the ACC position until the shift lever/gear selector is in PARK and the button is pressed twice to the OFF position. If the shift lever/gear selector is not in PARK and the ENGINE START/STOP button is pressed once, the EVIC (if equipped) will display a "Vehicle Not In Park" message and the engine will remain running. Never leave a vehicle out of the PARK position, or it could roll.

NOTE: If the ignition switch is left in the ACC or RUN (engine not running) position and the transmission is in PARK, the system will automatically time out after 30 minutes of inactivity and the ignition will switch to the OFF position.

ENGINE START/STOP Button Functions — With Driver's Foot OFF The Brake Pedal (In PARK Or NEUTRAL Position)

The ENGINE START/STOP button operates similar to an ignition switch. It has four positions, OFF, ACC, RUN

and START. To change the ignition positions without starting the vehicle and use the accessories follow these steps:

- Starting with the ignition in the OFF position,
- Press the ENGINE START/STOP button once to place the ignition to the ACC position (EVIC will display "ACC"),
- Press the ENGINE START/STOP button a second time to place the ignition to the RUN position (EVIC will display "ON/RUN"),
- Press the ENGINE START/STOP button a third time to return the ignition to the OFF position (EVIC will display "OFF").

Extreme Cold Weather (Below –20°F Or –29°C)

To ensure reliable starting at these temperatures, use of an externally powered electric engine block heater (available from your authorized dealer) is recommended.

If Engine Fails To Start

WARNING!

- **Never pour fuel or other flammable liquid into the throttle body air inlet opening in an attempt to start the vehicle. This could result in flash fire causing serious personal injury.**

(Continued)

WARNING! *(Continued)*

- **Do not attempt to push or tow your vehicle to get it started. Vehicles equipped with an automatic transmission cannot be started this way. Unburned fuel could enter the catalytic converter and once the engine has started, ignite and damage the converter and vehicle.**
- **If the vehicle has a discharged battery, booster cables may be used to obtain a start from a booster battery or the battery in another vehicle. This type of start can be dangerous if done improperly. Refer to "Jump Starting" in "What To Do In Emergencies" for further information.**

Clearing A Flooded Engine (Using ENGINE START/STOP Button)

If the engine fails to start after you have followed the "Normal Starting" or "Extreme Cold Weather" procedures, it may be flooded. To clear any excess fuel:

1. Press and hold the brake pedal.
2. Press the accelerator pedal all the way to the floor and hold it.
3. Push and release the ENGINE START/STOP button once.

The starter motor will engage automatically, run for 10 seconds, and then disengage. Once this occurs, release the accelerator pedal and the brake pedal, wait 10 to 15 seconds, then repeat the "Normal Starting" procedure.

After Starting

The idle speed is controlled automatically and it will decrease as the engine warms up.

ENGINE BLOCK HEATER — IF EQUIPPED

The engine block heater warms the engine, and permits quicker starts in cold weather. Connect the cord to a standard 110-115 Volt AC electrical outlet with a grounded, three-wire extension cord.

The engine block heater must be plugged in at least one hour to have an adequate effect on the engine.

The engine block heater cord is bundled under the hood between the headlight assembly and the Totally Integrated Power Module (Fuse Box) on the driver's side of the vehicle.

WARNING!

Remember to disconnect the engine block heater cord before driving. Damage to the 110-115 Volt electrical cord could cause electrocution.

AUTOMATIC TRANSMISSION

WARNING!

- **It is dangerous to shift out of PARK or NEUTRAL if the engine speed is higher than idle speed. If your foot is not firmly pressing the brake pedal, the vehicle could accelerate quickly forward or in reverse. You could lose control of the vehicle and hit someone or something. Only shift into gear when the engine is idling normally and your foot is firmly pressing the brake pedal.**

(Continued)

WARNING! *(Continued)*

- **Unintended movement of a vehicle could injure those in or near the vehicle. As with all vehicles, you should never exit a vehicle while the engine is running. Before exiting a vehicle, always apply the parking brake, shift the transmission into PARK, turn the engine OFF, and remove the Key Fob. When the ignition is in the OFF position, the transmission is locked in PARK, securing the vehicle against unwanted movement.**
- **When leaving the vehicle, always make sure the ignition is in the OFF position, remove the key fob from the vehicle, and lock the vehicle.**

WARNING! *(Continued)*

- **Never leave children alone in a vehicle, or with access to an unlocked vehicle. Allowing children to be in a vehicle unattended is dangerous for a number of reasons. A child or others could be seriously or fatally injured. Children should be warned not to touch the parking brake, brake pedal or the transmission gear selector.**
- **Do not leave the Key Fob in or near the vehicle (or in a location accessible to children), and do not leave the ignition in the ACC or ON/RUN position. A child could operate power windows, other controls, or move the vehicle.**

(Continued)

CAUTION!

Damage to the transmission may occur if the following precautions are not observed:

- **Shift into or out of PARK or REVERSE only after the vehicle has come to a complete stop.**
- **Do not shift between PARK, REVERSE, NEUTRAL, or DRIVE when the engine is above idle speed.**
- **Before shifting into any gear, make sure your foot is firmly pressing the brake pedal.**

NOTE: You must press and hold the brake pedal while shifting out of PARK.

Key Ignition Park Interlock

This vehicle is equipped with a Key Ignition Park Interlock which requires the transmission to be in PARK before the engine can be turned OFF. This helps the driver avoid inadvertently leaving the vehicle without placing the transmission in PARK.

This system also locks the transmission in PARK whenever the ignition switch is in the OFF position.

Brake/Transmission Shift Interlock System

This vehicle is equipped with a Brake Transmission Shift Interlock System (BTSI) that holds the shift lever in PARK unless the brakes are applied. To shift the transmission out of PARK, the ignition switch must be turned to the ON/RUN position (engine running or not) and the brake pedal must be pressed.

Four-Speed Or Six-Speed Automatic Transmission

The transmission gear position display (located in the instrument cluster) indicates the transmission gear range. You must press the brake pedal to move the shift lever

out of PARK (refer to “Brake/Transmission Shift Interlock System” in this section). To drive, move the shift lever from PARK or NEUTRAL to the DRIVE position.

The electronically-controlled transmission provides a precise shift schedule. The transmission electronics are self-calibrating; therefore, the first few shifts on a new vehicle may be somewhat abrupt. This is a normal condition, and precision shifts will develop within a few hundred miles (kilometers).

Only shift from DRIVE to PARK or REVERSE when the accelerator pedal is released and the vehicle is stopped. Be sure to keep your foot on the brake pedal when shifting between these gears.

The transmission shift lever has PARK, REVERSE, NEUTRAL, DRIVE, and AutoStick® (-/+) shift positions. Manual shifts can be made using the AutoStick® shift control (refer to “AutoStick®” in this section for further information). Moving the shift lever into the AutoStick® (+/-) position (below the Drive position) activates Autostick® mode, providing manual shift control and displaying the current gear in the instrument cluster. In AutoStick® mode, tapping the shift lever left (-) or right (+) will manually select the transmission gear.

Shift Lever

Gear Ranges

DO NOT race the engine when shifting from PARK or NEUTRAL into another gear range.

NOTE: After selecting any gear range, wait a moment to allow the selected gear to engage before accelerating. This is especially important when the engine is cold.

PARK (P)

This range supplements the parking brake by locking the transmission. The engine can be started in this range. Never attempt to use PARK while the vehicle is in motion. Apply the parking brake when leaving the vehicle in this range.

When parking on a level surface, you may shift the transmission into PARK first, and then apply the parking brake.

When parking on a hill, apply the parking brake before shifting the transmission to PARK, otherwise the load on the transmission locking mechanism may make it difficult to move the shift lever out of PARK. As an added precaution, turn the front wheels toward the curb on a downhill grade and away from the curb on an uphill grade.

WARNING!

- **Never use the PARK position as a substitute for the parking brake. Always apply the parking brake fully when parked to guard against vehicle movement and possible injury or damage.**
- **Your vehicle could move and injure you and others if it is not completely in PARK. Check by trying to move the shift lever out of PARK with the brake pedal released. Make sure the transmission is in PARK before leaving the vehicle.**

(Continued)

WARNING! *(Continued)*

- **It is dangerous to shift out of PARK or NEUTRAL if the engine speed is higher than idle speed. If your foot is not firmly pressing the brake pedal, the vehicle could accelerate quickly forward or in reverse. You could lose control of the vehicle and hit someone or something. Only shift into gear when the engine is idling normally and your foot is firmly pressing the brake pedal.**

(Continued)

WARNING! *(Continued)*

- **Unintended movement of a vehicle could injure those in or near the vehicle. As with all vehicles, you should never exit a vehicle while the engine is running. Before exiting a vehicle, always apply the parking brake, shift the transmission into PARK, turn the engine OFF, and remove the Key Fob. When the ignition is in the OFF position, the transmission is locked in the PARK, securing the vehicle against unwanted movement.**
- **When leaving the vehicle, always make sure the ignition is in the OFF position, remove the key fob from the vehicle, and lock the vehicle.**

(Continued)

WARNING! *(Continued)*

- **Never leave children alone in a vehicle, or with access to an unlocked vehicle. Allowing children to be in a vehicle unattended is dangerous for a number of reasons. A child or others could be seriously or fatally injured. Children should be warned not to touch the parking brake, brake pedal or the shift lever.**
- **Do not leave the Key Fob in or near the vehicle (or in a location accessible to children), and do not leave the ignition in the ACC or ON/RUN position. A child could operate power windows, other controls, or move the vehicle.**

CAUTION!

- **Before moving the shift lever out of PARK, you must turn the ignition switch from the LOCK/OFF position to the ON/RUN position, and also press the brake pedal. Otherwise, damage to the shift lever could result.**
- **DO NOT race the engine when shifting from PARK or NEUTRAL into another gear range, as this can damage the drivetrain.**

The following indicators should be used to ensure that you have engaged the transmission into the PARK position:

- When shifting into PARK, firmly move the shift lever all the way forward and to the left until it stops and is fully seated.

- Look at the transmission gear position display and verify that it indicates the PARK position.
- With brake pedal released, verify that the shift lever will not move out of PARK.

REVERSE (R)

This range is for moving the vehicle backward. Shift into REVERSE only after the vehicle has come to a complete stop.

NEUTRAL (N)

Use this range when the vehicle is standing for prolonged periods with the engine running. The engine may be started in this range. Apply the parking brake and shift the transmission into PARK if you must leave the vehicle.

WARNING!

Do not coast in NEUTRAL and never turn off the ignition to coast down a hill. These are unsafe practices that limit your response to changing traffic or road conditions. You might lose control of the vehicle and have a collision.

CAUTION!

Towing the vehicle, coasting, or driving for any other reason with the transmission in NEUTRAL can cause severe transmission damage. Refer to "Recreational Towing" in "Starting And Operating" and "Towing A Disabled Vehicle" in "What To Do In Emergencies" for further information.

DRIVE (D)

This range should be used for most city and highway driving. It provides the smoothest upshifts and downshifts, and the best fuel economy. The transmission automatically upshifts through all forward gears. The DRIVE position provides optimum driving characteristics under all normal operating conditions.

When frequent transmission shifting occurs (such as when operating the vehicle under heavy loading conditions, in hilly terrain, traveling into strong head winds, or while towing heavy trailers), use the AutoStick® shift control (refer to "AutoStick®" in this section for further information) to select a lower gear. Under these conditions, using a lower gear will improve performance and extend transmission life by reducing excessive shifting and heat buildup.

If the transmission temperature exceeds normal operating limits, the powertrain controller will modify the transmission shift schedule and expand the range of torque converter clutch engagement. This is done to prevent transmission damage due to overheating.

During cold temperatures, transmission operation may be modified depending on engine and transmission temperature as well as vehicle speed. This feature improves warm up time of the engine and transmission to achieve maximum efficiency. Engagement of the torque converter clutch is inhibited until the transmission fluid is warm (refer to the "Note" under "Torque Converter Clutch" in this section). During extremely cold temperatures (-16°F [-27°C] or below), operation may briefly be limited to only second gear (for four-speed transmission) or third gear (for six-speed transmission). Normal operation will resume once the transmission temperature has risen to a suitable level.

Transmission Limp Home Mode

Transmission function is monitored electronically for abnormal conditions. If a condition is detected that could result in transmission damage, Transmission Limp Home Mode is activated. In this mode, the transmission remains in second gear (for four-speed transmission) or third gear (for six-speed transmission) regardless of which forward gear is selected. PARK, REVERSE, and NEUTRAL will continue to operate. The Malfunction Indicator Light (MIL) may be illuminated. Limp Home Mode allows the vehicle to be driven to an authorized dealer for service without damaging the transmission.

In the event of a momentary problem, the transmission can be reset to regain all forward gears by performing the following steps:

1. Stop the vehicle.
2. Shift the transmission into PARK.
3. Turn the ignition switch to the LOCK/OFF position.
4. Wait approximately 10 seconds.
5. Restart the engine.
6. Shift into the desired gear range. If the problem is no longer detected, the transmission will return to normal operation.

NOTE: Even if the transmission can be reset, we recommend that you visit your authorized dealer at your earliest possible convenience. Your authorized dealer has diagnostic equipment to determine if the problem could recur.

If the transmission cannot be reset, authorized dealer service is required.

Overdrive Operation

The automatic transmission includes an electronically controlled Overdrive (top gear). The transmission will automatically shift into Overdrive if the following conditions are present:

- The shift lever is in the DRIVE position.
- The transmission fluid has reached an adequate temperature.
- The engine coolant has reached an adequate temperature.
- The vehicle speed is sufficiently high.
- The driver is not heavily pressing the accelerator.

Torque Converter Clutch

A feature designed to improve fuel economy has been included in the automatic transmission on your vehicle. A clutch within the torque converter engages automatically at calibrated speeds. This may result in a slightly different feeling or response during normal operation in the upper gears. When the vehicle speed drops or during some accelerations, the clutch automatically disengages.

NOTE: The torque converter clutch will not engage until the transmission fluid and engine coolant are warm (usually after 1 to 3 miles [2 to 5 km] of driving). Because the engine speed is higher when the torque converter clutch is not engaged, it may seem as if the transmission is not shifting into Overdrive when cold. This is normal. Using the AutoStick® shift control, when the transmission is sufficiently warm, will demonstrate that the transmission is able to shift into and out of Overdrive.

AUTOSTICK®

AutoStick® is a driver-interactive transmission feature providing manual shift control, giving you more control of the vehicle. AutoStick® allows you to maximize engine braking, eliminate undesirable upshifts and downshifts, and improve overall vehicle performance. This system can also provide you with more control during passing, city driving, cold slippery conditions, mountain driving, trailer towing, and many other situations.

Operation

When the shift lever is in the AutoStick® position (below the DRIVE position), it can be moved from side to side. This allows the driver to manually select the transmission gear being used. Moving the shift lever to the left (-) triggers a downshift and to the right (+) an upshift. The current gear will be displayed in the instrument cluster.

In AutoStick® mode, the transmission will shift up or down when the driver moves the shift lever to the right (+) or left (-), unless an engine lugging or overspeed condition would result. It will remain in the selected gear until another upshift or downshift is chosen, except as described below.

- The transmission will automatically upshift when necessary to prevent engine over-speed.
- The transmission will automatically downshift as the vehicle slows (to prevent engine lugging) and will display the current gear.
- The transmission will automatically downshift to first gear when coming to a stop. After a stop, the driver should manually upshift (+) the transmission as the vehicle is accelerated.
- You can start out, from a stop, in any gear except top gear. Tapping (+) (at a stop) will allow starting in second gear. Starting out in second gear can be helpful in snow or icy conditions.

- If a requested downshift would cause the engine to over-speed, that shift will not occur.
- Avoid using speed control when AutoStick® is engaged.
- Transmission shifting will be more noticeable when AutoStick® is engaged.
- The system may revert to automatic shift mode if a fault or overheat condition is detected.

To disengage AutoStick® mode, return the shift lever to the DRIVE position. You can shift in or out of the AutoStick® position at any time without taking your foot off the accelerator pedal.

WARNING!

Do not downshift for additional engine braking on a slippery surface. The drive wheels could lose their grip and the vehicle could skid, causing a collision or personal injury.

ALL WHEEL DRIVE (AWD) — IF EQUIPPED

This feature provides on-demand All-Wheel Drive (AWD). The system is automatic with no driver inputs or additional driving skills required. Under normal driving conditions, the front wheels provide most of the traction. If the front wheels begin to lose traction, power is shifted automatically to the rear wheels. The greater the front wheel traction loss, the greater the power transfer to the rear wheels.

Additionally, on dry pavement under heavy throttle input (where one may have no wheel spin), torque will be

sent to the rear in a pre-emptive effort to improve vehicle launch and performance characteristics.

CAUTION!

All wheels must have the same size and type tires. Unequal tire sizes must not be used. Unequal tire size may cause failure of the power transfer unit.

DRIVING ON SLIPPERY SURFACES

Acceleration

Rapid acceleration on snow covered, wet, or other slippery surfaces may cause the driving wheels to pull erratically to the right or left. This phenomenon occurs when there is a difference in the surface traction under the front (driving) wheels.

WARNING!

Rapid acceleration on slippery surfaces is dangerous. Unequal traction can cause sudden pulling of the front wheels. You could lose control of the vehicle and possibly have a collision. Accelerate slowly and carefully whenever there is likely to be poor traction (ice, snow, wet, mud, loose sand, etc.).

Traction

When driving on wet or slushy roads, it is possible for a wedge of water to build up between the tire and road surface. This is hydroplaning and may cause partial or complete loss of vehicle control and stopping ability. To reduce this possibility, the following precautions should be observed:

1. Slow down during rainstorms or when the roads are slushy.

2. Slow down if the road has standing water or puddles.
3. Replace the tires when tread wear indicators first become visible.
4. Keep tires properly inflated.
5. Maintain sufficient distance between your vehicle and the vehicle in front of you to avoid a collision in a sudden stop.

DRIVING THROUGH WATER

Driving through water more than a few inches/centimeters deep will require extra caution to ensure safety and prevent damage to your vehicle.

Flowing/Rising Water

WARNING!

Do not drive on or across a road or path where water is flowing and/or rising (as in storm run-off). Flowing water can wear away the road or path's surface and cause your vehicle to sink into deeper water. Furthermore, flowing and/or rising water can carry your vehicle away swiftly. Failure to follow this warning may result in injuries that are serious or fatal to you, your passengers, and others around you.

Shallow Standing Water

Although your vehicle is capable of driving through shallow standing water, consider the following Cautions and Warnings before doing so.

WARNING!

- **Driving through standing water limits your vehicle's traction capabilities. Do not exceed 5 mph (8 km/h) when driving through standing water.**
- **Driving through standing water limits your vehicle's braking capabilities, which increases stopping distances. Therefore, after driving through standing water, drive slowly and lightly press on the brake pedal several times to dry the brakes.**
- **Failure to follow these warnings may result in injuries that are serious or fatal to you, your passengers, and others around you.**

CAUTION!

- **Always check the depth of the standing water before driving through it. Never drive through standing water that is deeper than the bottom of the tire rims mounted on the vehicle.**
- **Determine the condition of the road or the path that is under water and if there are any obstacles in the way before driving through the standing water.**
- **Do not exceed 5 mph (8 km/h) when driving through standing water. This will minimize wave effects.**

(Continued)

CAUTION! *(Continued)*

- **Driving through standing water may cause damage to your vehicle's drivetrain components. Always inspect your vehicle's fluids (i.e., engine oil, transmission, axle, etc.) for signs of contamination (i.e., fluid that is milky or foamy in appearance) after driving through standing water. Do not continue to operate the vehicle if any fluid appears contaminated, as this may result in further damage. Such damage is not covered by the New Vehicle Limited Warranty.**
- **Getting water inside your vehicle's engine can cause it to lock up and stall out, and cause serious internal damage to the engine. Such damage is not covered by the New Vehicle Limited Warranty.**

POWER STEERING

The standard power steering system will give you good vehicle response and increased ease of maneuverability in tight spaces. The system will provide mechanical steering capability if power assist is lost.

If for some reason the power assist is interrupted, it will still be possible to steer your vehicle. Under these conditions, you will observe a substantial increase in steering effort, especially at very low vehicle speeds and during parking maneuvers.

NOTE:

- Increased noise levels at the end of the steering wheel travel are considered normal and do not indicate that there is a problem with the power steering system.
- Upon initial start-up in cold weather, the power steering pump may make noise for a short amount of time. This is due to the cold, thick fluid in the steering

system. This noise should be considered normal, and it does not in any way damage the steering system.

CAUTION!

Prolonged operation of the steering system at the end of the steering wheel travel will increase the steering fluid temperature and it should be avoided when possible. Damage to the power steering pump may occur.

Power Steering Fluid Check

Checking the power steering fluid level at a defined service interval is not required. The fluid should only be checked if a leak is suspected, abnormal noises are apparent, and/or the system is not functioning as anticipated. Coordinate inspection efforts through an authorized dealer.

WARNING!

Fluid level should be checked on a level surface and with the engine off to prevent injury from moving parts and to ensure accurate fluid level reading. Do not overfill. Use only manufacturer's recommended power steering fluid.

CAUTION!

Do not use chemical flushes in your power steering system as the chemicals can damage your power steering components. Such damage is not covered by the New Vehicle Limited Warranty.

If necessary, add fluid to restore to the proper indicated level. With a clean cloth, wipe any spilled fluid from all surfaces. Refer to "Fluids, Lubricants, and Genuine Parts" in "Maintaining Your Vehicle" for the correct fluid type.

PARKING BRAKE

Before leaving the vehicle, make sure that the parking brake is fully applied. Also, be certain to leave the transmission in PARK.

The foot operated parking brake is located below the lower left corner of the instrument panel. To apply the park brake, firmly push the park brake pedal fully. To release the parking brake, press the park brake pedal a second time and let your foot up as you feel the brake disengage.

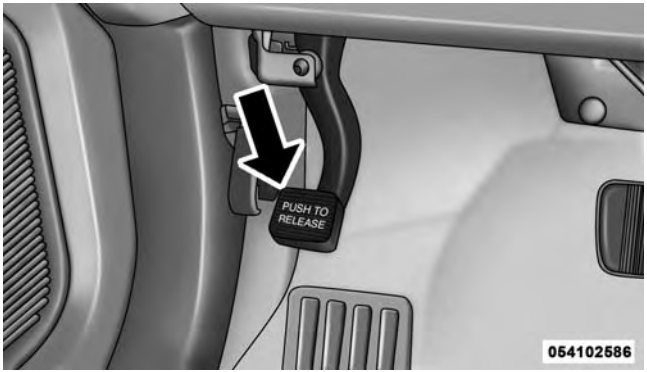

Parking Brake

When the parking brake is applied with the ignition switch ON, the “Brake Warning Light” in the instrument cluster will illuminate.

NOTE:

- When the parking brake is applied and the transmission is placed in gear, the "Brake Warning Light" will flash. If vehicle speed is detected, a chime will sound to alert the driver. Fully release the parking brake before attempting to move the vehicle.
- This light only shows that the parking brake is applied. It does not show the degree of brake application.

When parking on a hill, it is important to turn the front wheels toward the curb on a downhill grade and away from the curb on an uphill grade. For vehicles equipped with an automatic transmission, apply the parking brake before placing the shift lever in PARK, otherwise the load on the transmission locking mechanism may make it difficult to move the shift lever out of PARK. The parking brake should always be applied whenever the driver is not in the vehicle.

WARNING!

- **Never use the PARK position as a substitute for the parking brake. Always apply the parking brake fully when parked to guard against vehicle movement and possible injury or damage.**
- **Never leave children alone in a vehicle, or with access to an unlocked vehicle. Leaving unattended children in a vehicle is dangerous for a number of reasons. A child or others could be seriously or fatally injured. Children should be warned not to touch the parking brake, brake pedal or the shift lever. Do not leave the Key Fob in or near the vehicle, or in a location accessible to children, and do not leave the ignition of a vehicle equipped with Keyless Enter-N-Go™ in the ACC or ON/RUN mode. A child could operate power windows, other controls, or move the vehicle.**

(Continued)

WARNING! *(Continued)*

- **Be sure the parking brake is fully disengaged before driving; failure to do so can lead to brake failure and a collision.**
- **Always fully apply the parking brake when leaving your vehicle or it may roll and cause damage or injury. Also, be certain to leave the transmission in PARK. Failure to do so may cause the vehicle to roll and cause damage or injury.**

CAUTION!

If the "Brake Warning Light" remains on with the parking brake released, a brake system malfunction is indicated. Have the brake system serviced by an authorized dealer immediately.

BRAKE SYSTEM

Your vehicle is equipped with dual hydraulic brake systems. If either of the two hydraulic systems loses normal capability, the remaining system will still function. However, there will be some loss of overall braking effectiveness. This will be evident by increased pedal travel during application and greater pedal force required to slow or stop the vehicle. In addition, if the malfunction is caused by a leak in the hydraulic system, the "Brake Warning Light" will turn on as the brake fluid level drops in the master cylinder.

In the event power assist is lost for any reason (i.e., repeated brake applications with the engine OFF) the brakes will still function. However, the effort required to brake the vehicle will be much greater than that required with the power system operating.

WARNING!

- **Riding the brakes can lead to brake failure and possibly a collision. Driving with your foot resting or riding on the brake pedal can result in abnormally high brake temperatures, excessive lining wear, and possible brake damage. You would not have your full braking capacity in an emergency.**
- **Driving a vehicle with the "Brake Warning Light" on is dangerous. A significant decrease in braking performance or vehicle stability during braking may occur. It will take you longer to stop the vehicle or will make your vehicle harder to control. You could have a collision. Have the vehicle checked immediately.**

ELECTRONIC BRAKE CONTROL SYSTEM

Your vehicle is equipped with an advanced electronic brake control system commonly referred to as ESC. This system includes Anti-Lock Brake System (ABS), Brake Assist System (BAS), Traction Control System (TCS), Electronic Roll Mitigation (ERM), Electronic Stability Control (ESC), Trailer Sway Control (TSC) and Hill Start Assist (HSA). These systems work together to enhance both vehicle stability and control in various driving conditions.

Anti-Lock Brake System (ABS)

The Anti-Lock Brake System (ABS) provides increased vehicle stability and brake performance under most braking conditions. The system automatically "pumps" the brakes during severe braking conditions to prevent wheel lock-up.

When the vehicle is driven over 7 mph (11 km/h), you may also hear a slight clicking sound as well as some

related motor noises. These noises are the system performing its self check cycle to ensure that the ABS is working properly. This self check occurs each time the vehicle is started and accelerated past 7 mph (11 km/h).

ABS is activated during braking under certain road or stopping conditions. ABS-inducing conditions can include ice, snow, gravel, bumps, railroad tracks, loose debris, or panic stops.

You also may experience the following when the brake system goes into Anti-lock:

- The ABS motor running (it may continue to run for a short time after the stop),
- The clicking sound of solenoid valves,
- Brake pedal pulsations, and
- A slight drop or fall away of the brake pedal at the end of the stop.

These are all normal characteristics of ABS.

WARNING!

- **The ABS contains sophisticated electronic equipment that may be susceptible to interference caused by improperly installed or high output radio transmitting equipment. This interference can cause possible loss of anti-lock braking capability. Installation of such equipment should be performed by qualified professionals.**
- **Pumping of the Anti-Lock Brakes will diminish their effectiveness and may lead to an accident. Pumping makes the stopping distance longer. Just press firmly on your brake pedal when you need to slow down or stop.**

(Continued)

WARNING! ***(Continued)***

- **The ABS cannot prevent the natural laws of physics from acting on the vehicle, nor can it increase braking or steering efficiency beyond that afforded by the condition of the vehicle brakes and tires or the traction afforded.**
- **The ABS cannot prevent accidents, including those resulting from excessive speed in turns, following another vehicle too closely, or hydroplaning.**
- **The capabilities of an ABS equipped vehicle must never be exploited in a reckless or dangerous manner, which could jeopardize the user's safety or the safety of others.**

All vehicle wheels and tires must be the same size and type and tires must be properly inflated to produce accurate signals for the computer.

Anti-Lock Brake Light

The Anti-Lock Brake Light monitors the ABS. The light will turn on when the ignition switch is turned to the ON position and may stay on for as long as four seconds.

If the ABS Light remains on or comes on while driving, it indicates that the Anti-Lock portion of the brake system is not functioning and that service is required. However, the conventional brake system will continue to operate normally if the Brake System Warning Light is not on.

If the ABS Light is on, the brake system should be serviced as soon as possible to restore the benefits of Anti-Lock brakes. If the ABS Light does not come on when the ignition switch is turned to the ON position, have the light repaired as soon as possible.

If both the Brake System Warning Light and the ABS Light remain on, the ABS and Electronic Brake Force Distribution (EBD) systems are not functioning. Immediate repair to the ABS system is required.

Brake Assist System (BAS)

The BAS is designed to optimize the vehicle's braking capability during emergency braking maneuvers. The system detects an emergency braking situation by sensing the rate and amount of brake application and then applies optimum pressure to the brakes. This can help reduce braking distances. The BAS complements the ABS. Applying the brakes very quickly results in the best BAS assistance. To receive the benefit of the system, you must apply continuous braking pressure during the stopping sequence, (do not "pump" the brakes). Do not reduce brake pedal pressure unless braking is no longer desired. Once the brake pedal is released, the BAS is deactivated.

WARNING!

BAS cannot prevent the natural laws of physics from acting on the vehicle, nor can it increase the traction afforded by prevailing road conditions. BAS cannot prevent accidents, including those resulting from excessive speed in turns, driving on very slippery surfaces, or hydroplaning. The capabilities of a BAS-equipped vehicle must never be exploited in a reckless or dangerous manner, which could jeopardize the user's safety or the safety of others.

Traction Control System (TCS)

This system monitors the amount of wheel spin of each of the driven wheels. If wheel spin is detected, brake pressure is applied to the slipping wheel(s) and engine power is reduced to provide enhanced acceleration and stability. A feature of the TCS system, Brake Limited Differential (BLD), functions similar to a limited slip

differential and controls the wheel spin across a driven axle. If one wheel on a driven axle is spinning faster than the other, the system will apply the brake of the spinning wheel. This will allow more engine torque to be applied to the wheel that is not spinning. This feature remains active even if TCS and ESC are in the "Partial Off" mode. Refer to "Electronic Stability Control (ESC)" in this section for more information.

Electronic Roll Mitigation (ERM)

This system anticipates the potential for wheel lift by monitoring the driver's steering wheel input and the speed of the vehicle. When ERM determines that the rate of change of the steering wheel angle and vehicle's speed are sufficient to potentially cause wheel lift, it then applies the appropriate brake and may also reduce engine power to lessen the chance that wheel lift will occur. ERM will only intervene during very severe or evasive driving maneuvers.

ERM can only reduce the chance of wheel lift occurring during severe or evasive driving maneuvers. It cannot prevent wheel lift due to other factors, such as road conditions, leaving the roadway, or striking objects or other vehicles.

WARNING!

Many factors, such as vehicle loading, road conditions, and driving conditions, influence the chance that wheel lift or rollover may occur. ERM cannot prevent all wheel lift or rollovers, especially those that involve leaving the roadway or striking objects or other vehicles. The capabilities of an ERM-equipped vehicle must never be exploited in a reckless or dangerous manner, which could jeopardize the user's safety or the safety of others.

Electronic Stability Control (ESC)

This system enhances directional control and stability of the vehicle under various driving conditions. ESC corrects for over-steering and under-steering the vehicle by applying the brake of the appropriate wheel. Engine power may also be reduced to help the vehicle maintain the desired path.

The ESC uses sensors in the vehicle to determine the path that the driver intends to steer the vehicle and compares it to the actual path of the vehicle. When the actual path does not match the intended path, the ESC applies the brake of the appropriate wheel to assist in counteracting the condition of oversteer or understeer.

- Oversteer - when the vehicle is turning more than appropriate for the steering wheel position.
- Understeer - when the vehicle is turning less than appropriate for the steering wheel position.

WARNING!

Electronic Stability Control (ESC) cannot prevent the natural laws of physics from acting on the vehicle, nor can it increase the traction afforded by prevailing road conditions. ESC cannot prevent accidents, including those resulting from excessive speed in turns, driving on very slippery surfaces, or hydroplaning. ESC also cannot prevent accidents resulting from loss of vehicle control due to inappropriate driver input for the conditions. Only a safe, attentive, and skillful driver can prevent accidents. The capabilities of an ESC equipped vehicle must never be exploited in a reckless or dangerous manner which could jeopardize the user's safety or the safety of others.

ESC Operating Modes

The ESC system has two available operating modes.

Full On

This is the normal operating mode for ESC. Whenever the vehicle is started the system will be in this mode. This mode should be used for most driving situations. ESC should only be turned to “Partial Off” for specific reasons as noted. Refer to “Partial Off” for additional information.

Partial Off

The “ESC OFF” button is located in the switch bank above the climate control. To enter the “Partial Off” mode, momentarily press the “ESC OFF” button and the “ESC OFF” Indicator Light will illuminate. To turn the ESC on again, momentarily press the “ESC OFF” button and the “ESC OFF” Indicator Light will turn off. This will restore the normal “ESC On” mode of operation.

ESC OFF Button

NOTE: To improve the vehicle’s traction when driving with snow chains, or when starting off in deep snow, sand, or gravel, it may be desirable to switch to the “Partial Off” mode by momentarily pressing the “ESC OFF” button. Once the situation requiring “Partial Off” mode is overcome, turn ESC back on by momentarily

pressing the "ESC OFF" button. This may be done while the vehicle is in motion.

WARNING!

- **When in "Partial Off" mode, the TCS functionality of ESC (except for the limited slip feature described in the TCS section) has been disabled and the "ESC Off Indicator Light" will be illuminated. When in "Partial Off" mode, the engine power reduction of TCS is disabled, and the enhanced vehicle stability offered by the ESC system is reduced.**
- **Trailer Sway Control (TSC) is disabled when the ESC system is in the "Partial Off" mode.**

ESC Activation/Malfunction Indicator Light And ESC OFF Indicator Light

The "ESC Activation/Malfunction Indicator Light" in the instrument cluster will come on when the ignition switch is turned to the ON position. It should go out with the engine running. If the "ESC Activation/Malfunction Indicator Light" comes on continuously with the engine running, a malfunction has been detected in the ESC system. If this light remains on after several ignition cycles, and the vehicle has been driven several miles (kilometers) at speeds greater than 30 mph (48 km/h), see your authorized dealer as soon as possible to have the problem diagnosed and corrected.

The "ESC Activation/Malfunction Indicator Light" (located in the instrument cluster) starts to flash as soon as the tires lose traction and the ESC system becomes active. The "ESC Activation/Malfunction Indicator Light" also

flashes when TCS is active. If the "ESC Activation/ Malfunction Indicator Light" begins to flash during acceleration, ease up on the accelerator and apply as little throttle as possible. Be sure to adapt your speed and driving to the prevailing road conditions.

NOTE:

- The "ESC Activation/Malfunction Indicator Light" and the "ESC OFF Indicator Light" come on momentarily each time the ignition switch is turned ON.
- Each time the ignition is turned ON, the ESC system will be ON even if it was turned off previously. Except for when the vehicle is started while in 4WD Low Range.
- The ESC system will make buzzing or clicking sounds when it is active. This is normal; the sounds will stop when ESC becomes inactive following the maneuver that caused the ESC activation.

The "ESC OFF Indicator Light" indicates the Electronic Stability Control (ESC) is in "ESC Partial Off" or "ESC Full Off".

Trailer Sway Control (TSC)

TSC uses sensors in the vehicle to recognize an excessively swaying trailer. TSC activates automatically once the excessively swaying trailer is recognized. When TSC is functioning, the "ESC Activation/Malfunction Indicator Light" will flash, the engine power will be reduced, and you will feel the brake being applied to individual wheels in an attempt to stop the trailer from swaying.

NOTE: The TSC is disabled when the ESC system is in the "Partial Off" mode.

WARNING!

- **TSC cannot stop all trailers from swaying. Always use caution when towing a trailer and follow the tongue weight recommendations. Refer to "Vehicle Loading" and "Trailer Towing" in "Starting and Operating" for further information.**
- **If TSC activates while towing a trailer, stop the vehicle at the nearest safe location and adjust the trailer load to eliminate the trailer sway.**
- **Failure to follow these warnings can result in an accident or serious personal injury.**

Hill Start Assist (HSA)

The HSA system is designed to assist the driver when starting a vehicle from a stop on a hill. HSA will maintain the level of brake pressure the driver applied for a short period of time after the driver takes their foot off of the brake pedal. If the driver does not apply the throttle during this short period of time, the system will release brake pressure and the vehicle will roll down the hill. The system will release brake pressure in proportion to the amount of throttle applied as the vehicle starts to move in the intended direction of travel.

HSA Activation Criteria

The following criteria must be met in order for HSA to activate:

- Vehicle must be stopped.
- Vehicle must be on a 6% (approximate) grade or greater hill.
- Gear selection matches vehicle uphill direction (i.e., vehicle facing uphill is in forward gear; vehicle backing uphill is in REVERSE gear).

HSA will work in REVERSE and all forward gears when the activation criteria have been met. The system will not activate if the vehicle is placed in NEUTRAL or PARK.

WARNING!

There may be situations on minor hills with a loaded vehicle, or while pulling a trailer, when the system will not activate and slight rolling may occur. This could cause a collision with another vehicle or object. Always remember the driver is responsible for braking the vehicle.

Towing With HSA

HSA will provide assistance when starting on a grade when pulling a trailer.

WARNING!

- **If you use a trailer brake controller with your trailer, your trailer brakes may be activated and deactivated with the brake switch. If so, when the brake pedal is released there may not be enough brake pressure to hold the vehicle and trailer on a hill and this could cause a collision with another vehicle or object behind you. In order to avoid rolling down the hill while resuming acceleration, manually activate the trailer brake prior to releasing the brake pedal. Always remember the driver is responsible for braking the vehicle.**

(Continued)

WARNING! ***(Continued)***

- **HSA is not a parking brake. Always apply the parking brake fully when leaving your vehicle. Also, be certain to leave the transmission in PARK.**
- **Failure to follow these warnings may cause the vehicle to roll down the incline and could collide with another vehicle, object or person, and cause serious or fatal injury. Always remember to use the parking brake while parking on a hill and that the driver is responsible for braking the vehicle.**

NOTE: The HSA system may also be turned on and off if the vehicle is equipped with the Electronic Vehicle Information Center (EVIC). Refer to "Electronic Vehicle Information Center (EVIC)" in "Understanding Your Instrument Panel" for further information.

TIRE SAFETY INFORMATION

Tire Markings

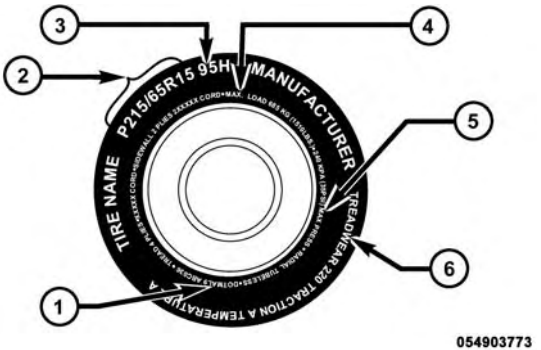

1 — U.S. DOT Safety Standards Code (TIN)
2 — Size Designation
3 — Service Description
4 — Maximum Load
5 — Maximum Pressure
6 — Treadwear, Traction and Temperature Grades

NOTE:

- P (Passenger) — Metric tire sizing is based on U.S. design standards. P-Metric tires have the letter “P” molded into the sidewall preceding the size designation. Example: P215/65R15 95H.
- European — Metric tire sizing is based on European design standards. Tires designed to this standard have the tire size molded into the sidewall beginning with the section width. The letter ″P″ is absent from this tire size designation. Example: 215/65R15 96H.
- LT (Light Truck) — Metric tire sizing is based on U.S. design standards. The size designation for LT-Metric tires is the same as for P-Metric tires except for the letters “LT” that are molded into the sidewall preceding the size designation. Example: LT235/85R16.

- Temporary spare tires are designed for temporary emergency use only. Temporary high pressure compact spare tires have the letter "T" or "S" molded into the sidewall preceding the size designation.
  Example: T145/80D18 103M.
- High flotation tire sizing is based on U.S. design standards and it begins with the tire diameter molded into the sidewall. Example: 31x10.5 R15 LT.

Tire Sizing Chart

EXAMPLE:

Example Size Designation: P215/65R15XL 95H, 215/65R15 96H, LT235/85R16C, T145/80D18 103M, 31x10.5 R15 LT
P = Passenger car tire size based on U.S. design standards, or **"....blank...."** = Passenger car tire based on European design standards, or **LT** = Light truck tire based on U.S. design standards, or **T or S** = Temporary spare tire or **31** = Overall diameter in inches (in)
215, 235, 145 = Section width in millimeters (mm)
65, 85, 80 = Aspect ratio in percent (%) – Ratio of section height to section width of tire, or **10.5** = Section width in inches (in)

EXAMPLE:
R = Construction code – ″R″ means radial construction, or – ″D″ means diagonal or bias construction
15, 16, 18 = Rim diameter in inches (in)
Service Description:
95 = Load Index – A numerical code associated with the maximum load a tire can carry
H = Speed Symbol – A symbol indicating the range of speeds at which a tire can carry a load corresponding to its load index under certain operating conditions – The maximum speed corresponding to the speed symbol should only be achieved under specified operating conditions (i.e., tire pressure, vehicle loading, road conditions, and posted speed limits)

EXAMPLE:

Load Identification:
Absence of the following load identification symbols on the sidewall of the tire indicates a Standard Load (SL) tire:

- **XL** = Extra load (or reinforced) tire, or
- **LL** = Light load tire or
- **C, D, E, F, G** = Load range associated with the maximum load a tire can carry at a specified pressure

Maximum Load – Maximum load indicates the maximum load this tire is designed to carry

Maximum Pressure – Maximum pressure indicates the maximum permissible cold tire inflation pressure for this tire

Tire Identification Number (TIN)

The TIN may be found on one or both sides of the tire, however, the date code may only be on one side. Tires with white sidewalls will have the full TIN, including the date code, located on the white sidewall side of the tire. Look for the TIN on the outboard side of black sidewall tires as mounted on the vehicle. If the TIN is not found on the outboard side, then you will find it on the inboard side of the tire.

EXAMPLE:
DOT MA L9 ABCD 0301
DOT = Department of Transportation – This symbol certifies that the tire is in compliance with the U.S. Department of Transportation tire safety standards and is approved for highway use
MA = Code representing the tire manufacturing location (two digits)
L9 = Code representing the tire size (two digits)
ABCD = Code used by the tire manufacturer (one to four digits)
03 = Number representing the week in which the tire was manufactured (two digits) – 03 means the 3rd week
01 = Number representing the year in which the tire was manufactured (two digits) – 01 means the year 2001 – Prior to July 2000, tire manufacturers were only required to have one number to represent the year in which the tire was manufactured. Example: 031 could represent the 3rd week of 1981 or 1991

Tire Terminology And Definitions

Term	Definition
B-Pillar	The vehicle B-Pillar is the structural member of the body located behind the front door.
Cold Tire Inflation Pressure	Cold tire inflation pressure is defined as the tire pressure after the vehicle has not been driven for at least three hours, or driven less than 1 mile (1.6 km) after sitting for a minimum of three hours. Inflation pressure is measured in units of PSI (pounds per square inch) or kPa (kilopascals).
Maximum Inflation Pressure	The maximum inflation pressure is the maximum permissible cold tire inflation pressure for this tire. The maximum inflation pressure is molded into the sidewall.
Recommended Cold Tire Inflation Pressure	Vehicle manufacturer's recommended cold tire inflation pressure as shown on the tire placard.
Tire Placard	A label permanently attached to the vehicle describing the vehicle's loading capacity, the original equipment tire sizes and the recommended cold tire inflation pressures.

Tire Loading And Tire Pressure

Tire And Loading Information Placard Location

NOTE: The proper cold tire inflation pressure is listed on the driver's side B-Pillar or the rear edge of the driver's side door.

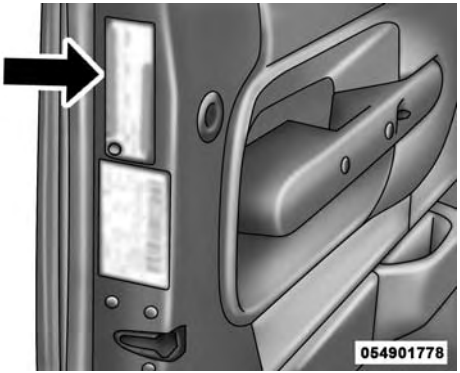

Example Tire Placard Location (Door)

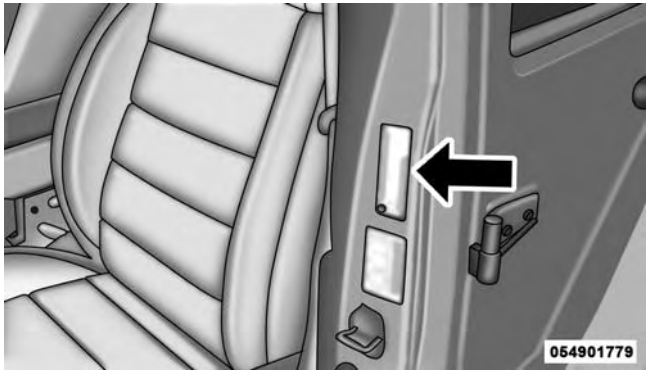

Example Tire Placard Location (B-Pillar)

Tire And Loading Information Placard

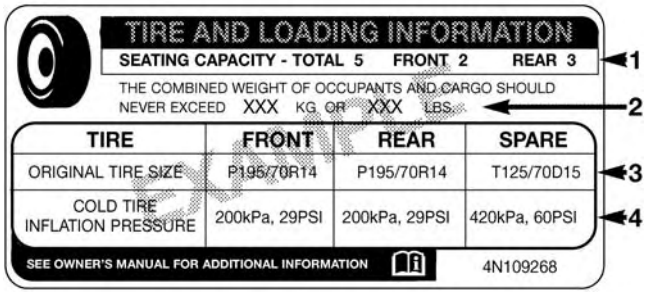

811b5a9a

Tire And Loading Information Placard

This placard tells you important information about the:

1. Number of people that can be carried in the vehicle.
2. Total weight your vehicle can carry.

3. Tire size designed for your vehicle.
4. Cold tire inflation pressures for the front, rear, and spare tires.

Loading

The vehicle maximum load on the tire must not exceed the load carrying capacity of the tire on your vehicle. You will not exceed the tire's load carrying capacity if you adhere to the loading conditions, tire size, and cold tire inflation pressures specified on the Tire and Loading Information placard and in the "Vehicle Loading" section of this manual.

NOTE: Under a maximum loaded vehicle condition, gross axle weight ratings (GAWRs) for the front and rear axles must not be exceeded. For further information on GAWRs, vehicle loading, and trailer towing, refer to "Vehicle Loading" in this section.

To determine the maximum loading conditions of your vehicle, locate the statement "The combined weight of occupants and cargo should never exceed XXX lbs or XXX kg" on the Tire and Loading Information placard. The combined weight of occupants, cargo/luggage and trailer tongue weight (if applicable) should never exceed the weight referenced here.

Steps For Determining Correct Load Limit

1. Locate the statement "The combined weight of occupants and cargo should never exceed XXX lbs or XXX kg" on your vehicle's placard.
2. Determine the combined weight of the driver and passengers that will be riding in your vehicle.
3. Subtract the combined weight of the driver and passengers from XXX lbs or XXX kg.
4. The resulting figure equals the available amount of cargo and luggage load capacity. For example, if

"XXX" amount equals 1,400 lbs (635 kg) and there will be five 150 lb (68 kg) passengers in your vehicle, the amount of available cargo and luggage load capacity is 650 lbs (295 kg) (since 5 x 150 lbs (68 kg) = 750 lbs (340 kg), and 1400 lbs (635 kg) – 750 lbs (340 kg) = 650 lbs [295 kg]).

5. Determine the combined weight of luggage and cargo being loaded on the vehicle. That weight may not safely exceed the available cargo and luggage load capacity calculated in step 4.

NOTE:

- If your vehicle will be towing a trailer, load from your trailer will be transferred to your vehicle. The following table shows examples on how to calculate total load, cargo/luggage, and towing capacities of your vehicle with varying seating configurations and number and size of occupants. This table is for illustration purposes only and may not be accurate for the seating and load carry capacity of your vehicle.
- For the following example, the combined weight of occupants and cargo should never exceed 865 lbs (392 kg).

Occupants			Combined weight of occupants and cargo from Tire Placard	MINUS	Combined Occupant's weight	=	AVAILABLE Cargo/Luggage and Trailer Tongue Weight
TOTAL	FRONT	REAR					
EXAMPLE 1							
5	2	3	865 lbs	minus	Occupant 1: 200 lbs Occupant 2: 130 lbs Occupant 3: 160 lbs Occupant 4: 100 lbs Occupant 5: 80 lbs TOTAL WEIGHT: 670 lbs 670 lbs	=	195 lbs
EXAMPLE 2							
3	2	1	865 lbs	minus	Occupant 1: 210 lbs Occupant 2: 180 lbs Occupant 3: 150 lbs TOTAL WEIGHT: 540 lbs 540 lbs	=	325 lbs
EXAMPLE 3							
2	2	0	865 lbs	minus	Occupant 1: 200 lbs Occupant 2: 200 lbs TOTAL WEIGHT: 400 lbs 400 lbs	=	465 lbs

EXAMPLE

811a4d11

WARNING!

Overloading of your tires is dangerous. Overloading can cause tire failure, affect vehicle handling, and increase your stopping distance. Use tires of the recommended load capacity for your vehicle. Never overload them.

TIRES — GENERAL INFORMATION

Tire Pressure

Proper tire inflation pressure is essential to the safe and satisfactory operation of your vehicle. Four primary areas are affected by improper tire pressure:

- Safety and Vehicle Stability
- Economy
- Tread Wear
- Ride Comfort

Safety

WARNING!

- **Improperly inflated tires are dangerous and can cause collisions.**
- **Under-inflation increases tire flexing and can result in over-heating and tire failure.**
- **Over-inflation reduces a tire's ability to cushion shock. Objects on the road and chuckholes can cause damage that result in tire failure.**
- **Over-inflated or under-inflated tires can affect vehicle handling and can fail suddenly, resulting in loss of vehicle control.**
- **Unequal tire pressures can cause steering problems. You could lose control of your vehicle.**

(Continued)

WARNING! ***(Continued)***

- **Unequal tire pressures from one side of the vehicle to the other can cause the vehicle to drift to the right or left.**
- **Always drive with each tire inflated to the recommended cold tire inflation pressure.**

Both under-inflation and over-inflation affect the stability of the vehicle and can produce a feeling of sluggish response or over responsiveness in the steering.

NOTE:

- Unequal tire pressures from side to side may cause erratic and unpredictable steering response.
- Unequal tire pressure from side to side may cause the vehicle to drift left or right.

Economy

Under-inflated tires will increase tire rolling resistance resulting in higher fuel consumption.

Ride Comfort And Vehicle Stability

Proper tire inflation contributes to a comfortable ride. Over-inflation produces a jarring and uncomfortable ride.

Tire Inflation Pressures

The proper cold tire inflation pressure is listed on the driver's side B-Pillar or rear edge of the driver's side door.

At least once a month:

- Check and adjust tire pressure with a good quality pocket-type pressure gauge. Do not make a visual

judgement when determining proper inflation. Tires may look properly inflated even when they are under-inflated.

- Inspect tires for signs of tire wear or visible damage.

CAUTION!

After inspecting or adjusting the tire pressure, always reinstall the valve stem cap. This will prevent moisture and dirt from entering the valve stem, which could damage the valve stem.

Inflation pressures specified on the placard are always "cold tire inflation pressure." Cold tire inflation pressure is defined as the tire pressure after the vehicle has not been driven for at least three hours, or driven less than 1 mile (1.6 km) after sitting for a minimum of three hours.

The cold tire inflation pressure must not exceed the maximum inflation pressure molded into the tire sidewall.

Check tire pressures more often if subject to a wide range of outdoor temperatures, as tire pressures vary with temperature changes.

Tire pressures change by approximately 1 psi (7 kPa) per 12°F (7°C) of air temperature change. Keep this in mind when checking tire pressure inside a garage, especially in the winter.

Example: If garage temperature = 68°F (20°C) and the outside temperature = 32°F (0°C) then the cold tire inflation pressure should be increased by 3 psi (21 kPa), which equals 1 psi (7 kPa) for every 12°F (7°C) for this outside temperature condition.

Tire pressure may increase from 2 to 6 psi (13 to 40 kPa) during operation. DO NOT reduce this normal pressure build up or your tire pressure will be too low.

Tire Pressures For High Speed Operation

The manufacturer advocates driving at safe speeds and within posted speed limits. Where speed limits or conditions are such that the vehicle can be driven at high speeds, maintaining correct tire inflation pressure is very important. Increased tire pressure and reduced vehicle loading may be required for high-speed vehicle operation. Refer to your authorized tire dealer or original equipment vehicle dealer for recommended safe operating speeds, loading and cold tire inflation pressures.

WARNING!

High speed driving with your vehicle under maximum load is dangerous. The added strain on your tires could cause them to fail. You could have a serious collision. Do not drive a vehicle loaded to the maximum capacity at continuous speeds above 75 mph (120 km/h).

Radial Ply Tires

WARNING!

Combining radial ply tires with other types of tires on your vehicle will cause your vehicle to handle poorly. The instability could cause a collision. Always use radial ply tires in sets of four. Never combine them with other types of tires.

Tire Repair

If your tire becomes damaged, it may be repaired if it meets the following criteria:

- The tire has not been driven on when flat.
- The damage is only on the tread section of your tire (sidewall damage is not repairable).
- The puncture is no greater than ¼″ (6 mm).

Consult an authorized tire dealer for tire repairs and additional information.

Damaged Run Flat tires, or Run Flat tires that have experienced a loss of pressure should be replaced immediately with another Run Flat tire of identical size and service description (Load Index and Speed Symbol).

All Season Tires — If Equipped

All Season tires provide traction for all seasons (spring, summer, fall and winter). Traction levels may vary between different all season tires. All season tires can be identified by the M+S, M&S, M/S or MS designation on the tire sidewall. Use all season tires only in sets of four; failure to do so may adversely affect the safety and handling of your vehicle.

Summer Or Three Season Tires — If Equipped

Summer tires provide traction in both wet and dry conditions, and are not intended to be driven in snow or on ice. If your vehicle is equipped with summer tires, be aware these tires are not designed for winter or cold driving conditions. For more information, contact a authorized dealer. Summer tires do not contain the “all season” designation or “mountain/snowflake” symbol on the tire sidewall.

Use summer tires only in sets of four; failure to do so may adversely affect the safety and handling of your vehicle.

WARNING!

Do not use summer tires in snow/ice conditions. You could lose vehicle control, resulting in severe injury or death. Driving too fast for conditions also creates the possibility of loss of vehicle control.

Snow Tires

Some areas of the country require the use of snow tires during the winter. Snow tires can be identified by a "mountain/snowflake" symbol on the tire sidewall.

If you need snow tires, select tires equivalent in size and type to the original equipment tires. Use snow tires only in sets of four; failure to do so may adversely affect the safety and handling of your vehicle.

Snow tires generally have lower speed ratings than what was originally equipped with your vehicle and should not be operated at sustained speeds over 75 mph (120 km/h). For speeds above 75 mph (120 km/h) refer to original equipment or an authorized tire dealer for recommended safe operating speeds, loading and cold tire inflation pressures.

While studded tires improve performance on ice, skid and traction capability on wet or dry surfaces may be poorer than that of non-studded tires. Some states prohibit studded tires; therefore, local laws should be checked before using these tire types.

Spare Tire Matching Original Equipped Tire And Wheel — If Equipped

Your vehicle may be equipped with a spare tire and wheel equivalent in look and function to the original equipment tire and wheel found on the front or rear axle of your vehicle. This spare tire may be used in the tire rotation for your vehicle. If your vehicle has this option, refer to an authorized tire dealer for the recommended tire rotation pattern.

Compact Spare Tire — If Equipped

The compact spare is for temporary emergency use only. You can identify if your vehicle is equipped with a compact spare by looking at the spare tire description on

the Tire and Loading Information Placard located on the driver's side door opening or on the sidewall of the tire. Compact spare tire descriptions begin with the letter "T" or "S" preceding the size designation.
Example: T145/80D18 103M.

T, S = Temporary Spare Tire

Since this tire has limited tread life, the original equipment tire should be repaired (or replaced) and reinstalled on your vehicle at the first opportunity.

Do not install a wheel cover or attempt to mount a conventional tire on the compact spare wheel, since the wheel is designed specifically for the compact spare tire. Do not install more than one compact spare tire and wheel on the vehicle at any given time.

WARNING!

Compact spares are for temporary emergency use only. With these spares, do not drive more than 50 mph (80 km/h). Temporary use spares have limited tread life. When the tread is worn to the tread wear indicators, the temporary use spare tire needs to be replaced. Be sure to follow the warnings, which apply to your spare. Failure to do so could result in spare tire failure and loss of vehicle control.

Full Size Spare — If Equipped

The full size spare is for temporary emergency use only. This tire may look like the originally equipped tire on the front or rear axle of your vehicle, but it is not. This spare tire may have limited tread life. When the tread is worn to the tread wear indicators, the temporary use full size spare tire needs to be replaced. Since it is not the same as

your original equipment tire, replace (or repair) the original equipment tire and reinstall on the vehicle at the first opportunity.

Limited-Use Spare — If Equipped

The limited-use spare tire is for temporary emergency use only. This tire is identified by a label located on the limited-use spare wheel. This label contains the driving limitations for this spare. This tire may look like the original equipped tire on the front or rear axle of your vehicle, but it is not. Installation of this limited-use spare tire affects vehicle handling. Since it is not the same as your original equipment tire, replace (or repair) the original equipment tire and reinstall on the vehicle at the first opportunity.

WARNING!

Limited-use spares are for emergency use only. Installation of this limited-use spare tire affects vehicle handling. With this tire, do not drive more than the speed listed on the limit-use spare wheel. Keep inflated to the cold tire inflation pressures listed on your Tire and Loading Information Placard located on the driver's side B-Pillar or the rear edge of the driver's side door. Replace (or repair) the original equipment tire at the first opportunity and reinstall it on your vehicle. Failure to do so could result in loss of vehicle control.

Tire Spinning

When stuck in mud, sand, snow, or ice conditions, do not spin your vehicle's wheels above 30 mph (48 km/h) or for longer than 30 seconds continuously without stopping.

Refer to “Freeing A Stuck Vehicle” in “What To Do In Emergencies” for further information.

WARNING!

Fast spinning tires can be dangerous. Forces generated by excessive wheel speeds may cause tire damage or failure. A tire could explode and injure someone. Do not spin your vehicle’s wheels faster than 30 mph (48 km/h) for more than 30 seconds continuously when you are stuck, and do not let anyone near a spinning wheel, no matter what the speed.

Tread Wear Indicators

Tread wear indicators are in the original equipment tires to help you in determining when your tires should be replaced.

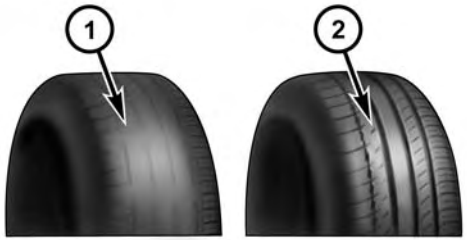

055007576

1 — Worn Tire
2 — New Tire

These indicators are molded into the bottom of the tread grooves. They will appear as bands when the tread depth becomes 1/16″ (2 mm). When the tread is worn to the

tread wear indicators, the tire should be replaced. Refer to "Replacement Tires" in this section for further information.

Life Of Tire

The service life of a tire is dependent upon varying factors including, but not limited to:

- Driving style
- Tire pressure - Improper cold tire inflation pressures can cause uneven wear patterns to develop across the tire tread. These abnormal wear patterns will reduce tread life, resulting in the need for earlier tire replacement.
- Distance driven
- Performance tires, tires with a speed rating of V or higher, and summer tires typically have a reduced tread life. Rotation of these tires per the vehicle maintenance schedule is highly recommended.

WARNING!

Tires and the spare tire should be replaced after six years, regardless of the remaining tread. Failure to follow this warning can result in sudden tire failure. You could lose control and have a collision resulting in serious injury or death.

Keep dismounted tires in a cool, dry place with as little exposure to light as possible. Protect tires from contact with oil, grease, and gasoline.

Replacement Tires

The tires on your new vehicle provide a balance of many characteristics. They should be inspected regularly for

wear and correct cold tire inflation pressures. The manufacturer strongly recommends that you use tires equivalent to the originals in size, quality and performance when replacement is needed. Refer to the paragraph on "Tread Wear Indicator." Refer to the Tire and Loading Information placard or the Vehicle Certification Label for the size designation of your tire. The Load Index and Speed Symbol for your tire will be found on the original equipment tire sidewall. See the Tire Sizing Chart example found in the Tire Safety Information section of this manual for more information relating to the Load Index and Speed Symbol of a tire.

It is recommended to replace the two front tires or two rear tires as a pair. Replacing just one tire can seriously affect your vehicle's handling. If you ever replace a wheel, make sure that the wheel's specifications match those of the original wheels.

It is recommended you contact your authorized tire dealer or original equipment dealer with any questions you may have on tire specifications or capability. Failure to use equivalent replacement tires may adversely affect the safety, handling, and ride of your vehicle.

WARNING!

- **Do not use a tire, wheel size or rating other than that specified for your vehicle. Some combinations of unapproved tires and wheels may change suspension dimensions and performance characteristics, resulting in changes to steering, handling, and braking of your vehicle. This can cause unpredictable handling and stress to steering and suspension components. You could lose control and have a collision resulting in serious injury or death. Use only the tire and wheel sizes with load ratings approved for your vehicle.**

(Continued)

WARNING! *(Continued)*

- **Never use a tire with a smaller load index or capacity, other than what was originally equipped on your vehicle. Using a tire with a smaller load index could result in tire overloading and failure. You could lose control and have a collision.**
- **Failure to equip your vehicle with tires having adequate speed capability can result in sudden tire failure and loss of vehicle control.**

CAUTION!

Replacing original tires with tires of a different size may result in false speedometer and odometer readings.

TIRE CHAINS (TRACTION DEVICES)

Use of traction devices require sufficient tire-to-body clearance. Follow these recommendations to guard against damage.

- Traction device must be of proper size for the tire, as recommended by the traction device manufacturer.
- Install on Front Tires Only.
- Due to limited clearance, P225/65R17 tire with a Security Chain Company (SCC) Super Z6 low profile traction device or equivalent is recommended.

WARNING!

Using tires of different size and type (M+S, Snow) between front and rear axles can cause unpredictable handling. You could lose control and have a collision.

CAUTION!

To avoid damage to your vehicle or tires, observe the following precautions:

- **Because of restricted traction device clearance between tires and other suspension components, it is important that only traction devices in good condition are used. Broken devices can cause serious damage. Stop the vehicle immediately if noise occurs that could indicate device breakage. Remove the damaged parts of the device before further use.**
- **Install device as tightly as possible and then retighten after driving about ½ mile (0.8 km).**
- **Do not exceed 30 mph (48 km/h).**
- **Drive cautiously and avoid severe turns and large bumps, especially with a loaded vehicle.**
- **Do not drive for a prolonged period on dry pavement.**

(Continued)

CAUTION! ***(Continued)***

- **Observe the traction device manufacturer's instructions on the method of installation, operating speed, and conditions for use. Always use the suggested operating speed of the device manufacturer's if it is less than 30 mph (48 km/h).**
- **Do not use traction devices on a compact spare tire.**

TIRE ROTATION RECOMMENDATIONS

The tires on the front and rear of your vehicle operate at different loads and perform different steering, driving, and braking functions. For these reasons, they wear at unequal rates.

These effects can be reduced by timely rotation of tires. The benefits of rotation are especially worthwhile with aggressive tread designs such as those on all season type

tires. Rotation will increase tread life, help to maintain mud, snow and wet traction levels, and contribute to a smooth, quiet ride.

Refer to the "Maintenance Schedule" for the proper maintenance intervals. The reasons for any rapid or unusual wear should be corrected prior to rotation being performed.

The suggested rotation method is the "rearward cross" shown in the following diagram. This rotation pattern does not apply to some directional tires that must not be reversed.

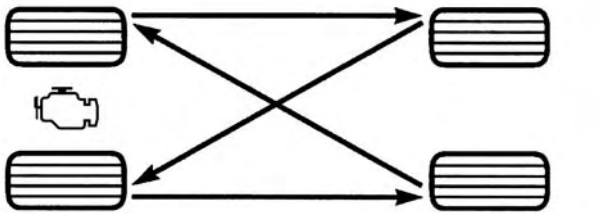

Tire Rotation

TIRE PRESSURE MONITOR SYSTEM (TPMS)

The Tire Pressure Monitor System (TPMS) will warn the driver of a low tire pressure based on the vehicle recommended cold placard pressure.

The tire pressure will vary with temperature by about 1 psi (7 kPa) for every 12°F (6.5°C). This means that when the outside temperature decreases, the tire pressure will decrease. Tire pressure should always be set based on cold inflation tire pressure. This is defined as the tire pressure after the vehicle has not been driven for at least three hours, or driven less than 1 mile (1.6 km) after a three hour period. The cold tire inflation pressure must not exceed the maximum inflation pressure molded into the tire sidewall. Refer to "Tires – General Information" in "Starting and Operating" for information on how to properly inflate the vehicle's tires. The tire pressure will also increase as the vehicle is driven. This is normal and there should be no adjustment for this increased pressure.

The TPMS will warn the driver of a low tire pressure if the tire pressure falls below the low-pressure warning limit for any reason, including low temperature effects and natural pressure loss through the tire.

The TPMS will continue to warn the driver of low tire pressure as long as the condition exists, and will not turn off until the tire pressure is at or above the recommended cold placard pressure. Once the low tire pressure warning (Tire Pressure Monitoring Telltale Light) illuminates, you must increase the tire pressure to the recommended cold placard pressure in order for the "Tire Pressure Monitoring Telltale Light" to turn off. The system will automatically update and the "Tire Pressure Monitoring Telltale Light" will turn off once the system receives the updated tire pressures. The vehicle may need to be driven for up to 20 minutes above 15 mph (24 km/h) in order for the TPMS to receive this information.

For example, your vehicle may have a recommended cold (parked for more than three hours) placard pressure of 33 psi (227 kPa). If the ambient temperature is 68°F (20°C) and the measured tire pressure is 28 psi (193 kPa), a temperature drop to 20°F (-7°C) will decrease the tire pressure to approximately 24 psi (165 kPa). This tire

pressure is low enough to turn ON the "Tire Pressure Monitoring Telltale Light." Driving the vehicle may cause the tire pressure to rise to approximately 28 psi (193 kPa), but the "Tire Pressure Monitoring Telltale Light" will still be on. In this situation, the "Tire Pressure Monitoring Telltale Light" will turn off only after the tires are inflated to the vehicle's recommended cold placard pressure value.

CAUTION!

- **The TPMS has been optimized for the original equipment tires and wheels. TPMS pressures and warning have been established for the tire size equipped on your vehicle. Undesirable system operation or sensor damage may result when using replacement equipment that is not of the same size, type, and/or style. Aftermarket wheels can cause sensor damage. Using aftermarket tire sealants may cause the Tire Pressure Monitoring System (TPMS) sensor to become inoperable. After using an aftermarket tire sealant it is recommended that you take your vehicle to an authorized dealership to have your sensor function checked.**

(Continued)

CAUTION! ***(Continued)***

- **After inspecting or adjusting the tire pressure, always reinstall the valve stem cap. This will prevent moisture and dirt from entering the valve stem, which could damage the Tire Pressure Monitoring Sensor.**

NOTE:

- The TPMS is not intended to replace normal tire care and maintenance, or to provide warning of a tire failure or condition.
- The TPMS should not be used as a tire pressure gauge while adjusting your tire pressure.
- Driving on a significantly under-inflated tire causes the tire to overheat and can lead to tire failure. Under-inflation also reduces fuel efficiency and tire tread life, and may affect the vehicle's handling and stopping ability.
- The TPMS is not a substitute for proper tire maintenance, and it is the driver's responsibility to maintain correct tire pressure using an accurate tire pressure gauge, even if under-inflation has not reached the level to trigger illumination of the "Tire Pressure Monitoring Telltale Light."
- Seasonal temperature changes will affect tire pressure, and the TPMS will monitor the actual tire pressure in the tire.

Base System

The Tire Pressure Monitor System (TPMS) uses wireless technology with wheel rim mounted electronic sensors to

monitor tire pressure levels. Sensors, mounted to each wheel as part of the valve stem, transmit tire pressure readings to the receiver module.

NOTE: It is particularly important for you to check the tire pressure in all of the tires on your vehicle monthly and to maintain the proper pressure.

The TPMS consists of the following components:

- Receiver Module
- Four Tire Pressure Monitoring Sensors
- Tire Pressure Monitoring Telltale Light

Tire Pressure Monitoring Low Pressure Warnings

The "Tire Pressure Monitoring Telltale Light" will illuminate in the instrument cluster, a "LOW TIRE" message will be displayed and a chime will sound when tire pressure is low in one or more of the four active road tires. An "Inflate to XX" message will also be displayed. Should this occur, you should stop as soon as possible, check the inflation pressure of each tire on your vehicle, and inflate each tire to the vehicle's recommended cold placard pressure value, as shown in the "Inflate to XX" message. Once the system receives the updated tire pressures, the system will automatically update and the "Tire Pressure Monitoring Telltale Light" and "LOW TIRE" message will turn off. The vehicle may need to be driven for up to 20 minutes above 15 mph (24 km/h) in order for the TPMS to receive this information.

Service TPMS Warning

When a system fault is detected, the "Tire Pressure Monitoring Telltale Light" will flash on and off for 75 seconds and then remain on solid. The system fault will also sound a chime. If the ignition switch is cycled, this sequence will repeat, providing the system fault still

exists. The "Tire Pressure Monitoring Telltale Light" will turn off when the fault condition no longer exists. A system fault can occur due to any of the following:

1. Jamming due to electronic devices or driving next to facilities emitting the same Radio Frequencies as the TPMS sensors.
2. Installing some form of aftermarket window tinting that affects radio wave signals.
3. Lots of snow or ice around the wheels or wheel housings.
4. Using tire chains on the vehicle.
5. Using wheels/tires not equipped with TPMS sensors.

NOTE:

- The compact spare tire does not have a tire pressure monitoring sensor. Therefore, the TPMS will not monitor the pressure in the compact spare tire.
- If you install the compact spare tire in place of a road tire that has a pressure below the low-pressure warning limit, a chime will sound and the "Tire Pressure Monitoring Telltale Light" will turn on and a "LOW TIRE" message will be displayed for a minimum of five seconds upon the next ignition switch cycle. An "Inflate to XX" message will also be displayed.
- After driving the vehicle for up to 20 minutes above 15 mph (24 km/h), the "Tire Pressure Monitoring Telltale Light" will flash on and off for 75 seconds and then remain on solid.
- For each subsequent ignition switch cycle, a chime will sound and the "Tire Pressure Monitoring Telltale Light" will flash on and off for 75 seconds and then remain on solid.
- Once you repair or replace the original road tire and reinstall it on the vehicle in place of the compact spare, the TPMS will update automatically and the "Tire

Pressure Monitoring Telltale Light" will turn off, as long as no tire pressure is below the low-pressure warning limit in any of the four active road tires. The vehicle may need to be driven for up to 20 minutes above 15 mph (24 km/h) in order for the TPMS to receive this information.

Premium System — If Equipped

The Tire Pressure Monitor System (TPMS) uses wireless technology with wheel rim mounted electronic sensors to monitor tire pressure levels. Sensors, mounted to each wheel as part of the valve stem, transmit tire pressure readings to the receiver module.

NOTE: It is particularly important for you to check the tire pressure in all of the tires on your vehicle monthly and to maintain the proper pressure.

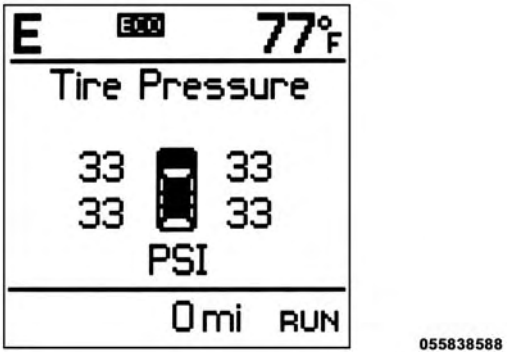

Tire Pressure Monitor Display

The TPMS consists of the following components:

- Receiver module
- Four Tire Pressure Monitoring Sensors

- Various Tire Pressure Monitoring System messages, which display in the Electronic Vehicle Information Center (EVIC)
- Tire Pressure Monitoring Telltale Light

Tire Pressure Monitoring Low Pressure Warnings

The "Tire Pressure Monitoring Telltale Light" will illuminate in the instrument cluster and a chime will sound when tire pressure is low in one or more of the four active road tires. In addition, the Electronic Vehicle Information Center (EVIC) will display a graphic showing the pressure values of each tire with the low tire pressure values in a different color. An "Inflate to XX" message will also be displayed.

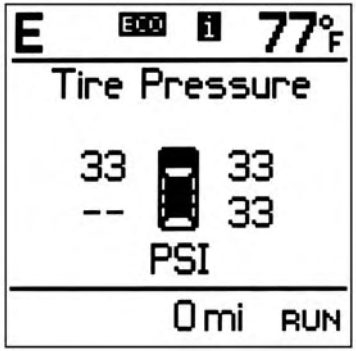

055838856

Tire Pressure Monitor Display

Should this occur, you should stop as soon as possible and inflate the tires with low pressure (those in a different color in the EVIC graphic) to the vehicle's recommended cold placard pressure value, as shown in the "Inflate to XX" message. Once the system receives the updated tire pressures, the system will automatically

update, the graphic display in the EVIC will change color back to the original color, and the "Tire Pressure Monitoring Telltale Light" will turn off. The vehicle may need to be driven for up to 20 minutes above 15 mph (24 km/h) in order for the TPMS to receive this information.

Service TPMS Warning

When a system fault is detected, the "Tire Pressure Monitoring Telltale Light" will flash on and off for 75 seconds and then remain on solid. The system fault will also sound a chime. In addition, the EVIC will display a "SERVICE TPM SYSTEM" message for a minimum of five seconds and then display dashes (- -) in place of the pressure value to indicate which sensor is not being received.

If the ignition switch is cycled, this sequence will repeat, providing the system fault still exists. If the system fault no longer exists, the "Tire Pressure Monitoring Telltale Light" will no longer flash, and the "SERVICE TPM SYSTEM" message will no longer display, and a pressure value will display in place of the dashes. A system fault can occur due to any of the following:

1. Jamming due to electronic devices or driving next to facilities emitting the same radio frequencies as the TPMS sensors.
2. Installing some form of aftermarket window tinting that affects radio wave signals.
3. Lots of snow or ice around the wheels or wheel housings.
4. Using tire chains on the vehicle.
5. Using wheels/tires not equipped with TPMS sensors.

The EVIC will also display a "SERVICE TPM SYSTEM" message for a minimum of five seconds when a system fault related to an incorrect sensor location fault is

detected. In this case, the "SERVICE TPM SYSTEM" message is then followed with a graphic display with pressure values still shown. This indicates that the pressure values are still being received from the TPM sensors but they may not be located in the correct vehicle position. The system still needs to be serviced as long as the "SERVICE TPM SYSTEM" message is displayed.

NOTE:

- The compact spare tire does not have a tire pressure monitoring sensor. Therefore, the TPMS will not monitor the pressure in the compact spare tire.
- If you install the compact spare tire in place of a road tire that has a pressure below the low-pressure warning limit, upon the next ignition switch cycle, the "Tire Pressure Monitoring Telltale Light" will remain on and a chime will sound. In addition, the graphic in the EVIC will still display a pressure value in a different color. An "Inflate to XX" message will also be displayed.
- After driving the vehicle for up to 20 minutes above 15 mph (24 km/h), the "Tire Pressure Monitoring Telltale Light" will flash on and off for 75 seconds and then remain on solid. In addition, the EVIC will display a "SERVICE TPM SYSTEM" message for a minimum of five seconds and then display dashes (- -) in place of the pressure value.
- For each subsequent ignition switch cycle, a chime will sound, the "Tire Pressure Monitoring Telltale Light" will flash on and off for 75 seconds and then remain on solid, and the EVIC will display a "SERVICE TPM SYSTEM" message for a minimum of five seconds and then display dashes (- -) in place of the pressure value.
- Once you repair or replace the original road tire and reinstall it on the vehicle in place of the compact spare,

the TPMS will update automatically. In addition, the "Tire Pressure Monitoring Telltale Light" will turn off and the graphic in the EVIC will display a new pressure value instead of dashes (- -), as long as no tire pressure is below the low-pressure warning limit in any of the four active road tires. The vehicle may need to be driven for up to 20 minutes above 15 mph (24 km/h) in order for the TPMS to receive this information.

General Information

This device complies with Part 15 of the FCC rules and RSS 210 of Industry Canada. Operation is subject to the following conditions:

- This device may not cause harmful interference.
- This device must accept any interference received, including interference that may cause undesired operation.

The tire pressure sensors are covered under one of the following licenses:

United States	MRXSSW4
Canada	2546-SSW4

FUEL REQUIREMENTS

This engine is designed to meet all emissions regulations and provide excellent fuel economy and performance when using high-quality unleaded "regular" gasoline having an octane rating of 87. The use of premium gasoline is not recommended, as it will not provide any benefit over regular gasoline in these engines.

Light spark knock at low engine speeds is not harmful to your engine. However, continued heavy spark knock at high speeds can cause damage and immediate service is

required. Poor quality gasoline can cause problems such as hard starting, stalling, and hesitations. If you experience these symptoms, try another brand of gasoline before considering service for the vehicle.

Over 40 auto manufacturers worldwide have issued and endorsed consistent gasoline specifications (the Worldwide Fuel Charter, WWFC) which define fuel properties necessary to deliver enhanced emissions, performance, and durability for your vehicle. The manufacturer recommends the use of gasolines that meet the WWFC specifications if they are available.

Reformulated Gasoline

Many areas of the country require the use of cleaner burning gasoline referred to as "Reformulated Gasoline." Reformulated gasoline contain oxygenates and are specifically blended to reduce vehicle emissions and improve air quality.

The manufacturer supports the use of reformulated gasoline. Properly blended reformulated gasoline will provide excellent performance and durability of engine and fuel system components.

Gasoline/Oxygenate Blends

Some fuel suppliers blend unleaded gasoline with oxygenates such as Ethanol.

CAUTION!

DO NOT use gasoline containing Methanol or gasoline containing more than 10% Ethanol. Use of these blends may result in starting and drivability problems, damage critical fuel system components, cause emissions to exceed the applicable standard, and/or cause the "Malfunction Indicator Light" to illuminate. Pump labels should clearly communicate if a fuel contains greater than 10% Ethanol.

Problems that result from using gasoline containing Methanol or gasoline containing more than 10% Ethanol are not the responsibility of the manufacturer and may not be covered under New Vehicle Limited Warranty.

E-85 Usage In Non-Flex Fuel Vehicles

Non-Flex Fuel Vehicles (FFV) are compatible with gasoline containing 10% ethanol (E10). Gasoline with higher ethanol content may void the New Vehicle Limited Warranty.

If a Non-FFV vehicle is inadvertently fueled with E-85 fuel, the engine will have some or all of these symptoms:

- Operate in a lean mode.
- OBD II “Malfunction Indicator Light” on.
- Poor engine performance.
- Poor cold start and cold drivability.
- Increased risk for fuel system component corrosion.

To fix a Non-FFV vehicle inadvertently fueled once with E-85 perform the following:

- Drain the fuel tank (see your authorized dealer).
- Change the engine oil and oil filter.
- Disconnect and reconnect the battery to reset the engine controller memory.

More extensive repairs will be required for prolonged exposure to E-85 fuel.

MMT In Gasoline

Methylcyclopentadienyl Manganese Tricarbonyl (MMT) is a manganese-containing metallic additive that is blended into some gasoline to increase octane. Gasoline blended with MMT provides no performance advantage beyond gasoline of the same octane number without MMT. Gasoline blended with MMT reduces spark plug life and reduces emissions system performance in some vehicles. The manufacturer recommends that gasoline

without MMT be used in your vehicle. The MMT content of gasoline may not be indicated on the gasoline pump, therefore, you should ask your gasoline retailer whether the gasoline contains MMT. MMT is prohibited in Federal and California reformulated gasoline.

Materials Added To Fuel

All gasoline sold in the United States is required to contain effective detergent additives. Use of additional detergents or other additives is not needed under normal conditions and they would result in additional cost. Therefore, you should not have to add anything to the fuel.

Fuel System Cautions

CAUTION!

Follow these guidelines to maintain your vehicle's performance:

- **The use of leaded gas is prohibited by Federal law. Using leaded gasoline can impair engine performance and damage the emissions control system.**
- **An out-of-tune engine or certain fuel or ignition malfunctions can cause the catalytic converter to overheat. If you notice a pungent burning odor or some light smoke, your engine may be out of tune or malfunctioning and may require immediate service. Contact your authorized dealer for service assistance.**

(Continued)

CAUTION! *(Continued)*

- **The use of fuel additives, which are now being sold as octane enhancers, is not recommended. Most of these products contain high concentrations of methanol. Fuel system damage or vehicle performance problems resulting from the use of such fuels or additives is not the responsibility of the manufacturer.**

NOTE: Intentional tampering with the emissions control system can result in civil penalties being assessed against you.

Carbon Monoxide Warnings

WARNING!

Carbon monoxide (CO) in exhaust gases is deadly. Follow the precautions below to prevent carbon monoxide poisoning:

(Continued)

WARNING! *(Continued)*

- **Do not inhale exhaust gases. They contain carbon monoxide, a colorless and odorless gas, which can kill. Never run the engine in a closed area, such as a garage, and never sit in a parked vehicle with the engine running for an extended period. If the vehicle is stopped in an open area with the engine running for more than a short period, adjust the ventilation system to force fresh, outside air into the vehicle.**
- **Guard against carbon monoxide with proper maintenance. Have the exhaust system inspected every time the vehicle is raised. Have any abnormal conditions repaired promptly. Until repaired, drive with all side windows fully open.**

FLEXIBLE FUEL (3.6L ENGINE ONLY) — IF EQUIPPED

E-85 General Information

The information in this section is for Flexible Fuel vehicles only. These vehicles can be identified by a unique fuel filler door label that states **Ethanol (E-85) or Unleaded Gasoline Only.** This section only covers those subjects that are unique to these vehicles. Please refer to the other sections of this manual for information on features that are common between Flexible Fuel and gasoline-only powered vehicles.

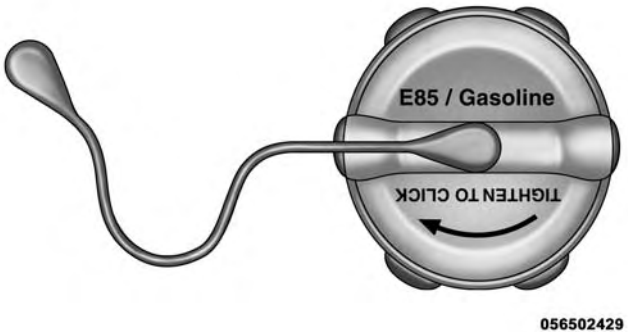

E-85 Fuel Cap

056502430

E-85 Badge

Ethanol Fuel (E-85)

E-85 is a mixture of approximately 85% fuel ethanol and 15% unleaded gasoline.

WARNING!

Ethanol vapors are extremely flammable and could cause serious personal injury. Never have any smoking materials lit in or near the vehicle when removing the fuel filler tube cap (gas cap) or filling the tank. Do not use E-85 as a cleaning agent and never use it near an open flame.

Fuel Requirements

If your vehicle is E-85 compatible, it will operate on unleaded gasoline with an octane rating of 87, or E-85 fuel, or any mixture of these two fuels.

For best results, a refueling pattern that avoids alternating between E-85 and unleaded gasoline is recommended.

When you do switch fuel types it is recommended that:

- You do not add less than 5 gallons (19 Liters) when refueling.
- You drive the vehicle immediately after refueling for at least 5 miles (8 km).

Observing these precautions will avoid possible hard starting and/or significant deterioration in driveability during warm up.

NOTE:

- Use seasonally adjusted E-85 fuel (ASTM D5798). With non-seasonally adjusted E-85 fuel, you may experience hard starting and rough idle following start up even if the above recommendations are followed, especially when the ambient temperature is below 32°F (0°C).
- Some additives used in regular gasoline are not fully compatible with E-85 and may form deposits in your engine. To eliminate driveability issues that may be caused by these deposits, a supplemental gasoline additive, such as MOPAR® Injector Cleanup or Techron may be used.

Selection Of Engine Oil For Flexible Fuel Vehicles (E-85) And Gasoline Vehicles

FFV vehicles operated on E-85 require specially formulated engine oils. These special requirements are included in MOPAR® engine oils, and in equivalent oils meeting Chrysler Specification MS-6395. The manufacturer only recommends engine oils that are API Certified and meet the requirements of Material Standard MS-6395. MS-6395 contains additional requirements, developed during extensive fleet testing, to provide additional protection to Chrysler Group LLC engines. Use MOPAR® or an equivalent oil meeting the specification MS-6395.

Starting

The characteristics of E-85 fuel make it unsuitable for use when ambient temperatures fall below 0°F (-18°C). In the range of 0°F (-18°C) to 32°F (0°C), you may experience an increase in the time it takes for your engine to start, and a deterioration in driveability (sags and/or hesitations) until the engine is fully warmed up.

NOTE: Use of the engine block heater (if equipped) is beneficial for E-85 startability when the ambient temperature is less than 32°F (0°C).

Cruising Range

Because E-85 fuel contains less energy per gallon/liter than gasoline, you will experience an increase in fuel consumption. You can expect your miles per gallon (mpg)/miles per liter and your driving range to decrease by about 30%, compared to gasoline operation.

Replacement Parts

Many components in your Flexible Fuel Vehicle (FFV) are designed to be compatible with ethanol. Always be sure that your vehicle is serviced with correct ethanol compatible parts.

CAUTION!

Replacing fuel system components with non-ethanol compatible components can damage your vehicle.

Maintenance

CAUTION!

Do not use ethanol mixture greater than 85% in your vehicle. It will cause difficulty in cold starting and may affect drivability.

ADDING FUEL

Fuel Filler Cap (Gas Cap)

The gas cap is located behind the fuel filler door on the left side of the vehicle. If the gas cap is lost or damaged, be sure the replacement cap has been designed for use with this vehicle.

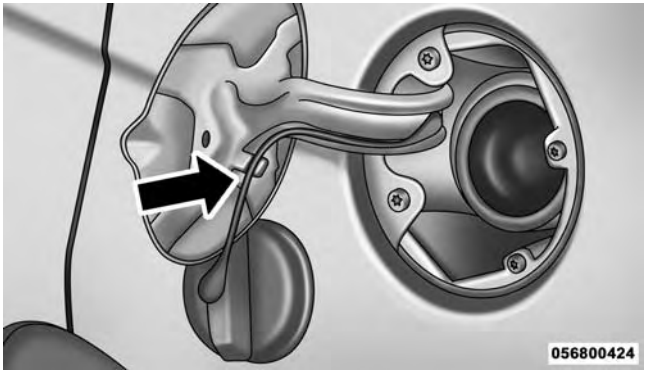

Fuel Filler Cap (Gas Cap)

NOTE: When removing the fuel filler cap, lay the cap tether in the hook, located on the fuel filler door reinforcement.

WARNING!

- **Never have any smoking materials lit in or near the vehicle when the gas cap is removed or the tank is being filled.**
- **Never add fuel to the vehicle when the engine is running.**
- **A fire may result if gasoline is pumped into a portable container that is inside of a vehicle. You could be burned. Always place gas containers on the ground while filling.**
- **Failure to follow this warning may result in serious injury or death.**

CAUTION!

- **Damage to the fuel system or emissions control system could result from using an improper fuel tank filler tube cap (gas cap).**
- **A poorly fitting gas cap could let impurities into the fuel system.**
- **A poorly fitting gas cap may cause the "Malfunction Indicator Light (MIL)" to turn on.**
- **To avoid fuel spillage and overfilling, do not "top off" the fuel tank after filling. When the fuel nozzle "clicks" or shuts off, the fuel tank is full.**

NOTE:

- When the fuel nozzle "clicks" or shuts off, the fuel tank is full.
- Tighten the gas cap until you hear a "clicking" sound. This is an indication that the gas cap is tightened

properly. The MIL in the instrument cluster may turn on if the gas cap is not secured properly. Make sure that the gas cap is tightened each time the vehicle is refueled.

Loose Fuel Filler Cap Message

If the vehicle diagnostic system determines that the fuel filler cap is loose, improperly installed, or damaged, the word "gASCAP" will display in the odometer. If this occurs, tighten the fuel filler cap until a "clicking" sound is heard and press the TRIP ODOMETER button to turn off the message. If the problem persists, the message will appear the next time the vehicle is started.

A loose, improperly installed, or damaged fuel filler cap may also turn on the MIL. Refer to "Onboard Diagnostic System" in "Maintaining Your Vehicle" for further information.

VEHICLE LOADING

The load carrying capacity of your vehicle is shown on the "Vehicle Certification Label". This information should be used for passenger and luggage loading as indicated.

Do not exceed the specified Gross Vehicle Weight Rating (GVWR) or the Gross Axle Weight Rating (GAWR).

Vehicle Certification Label

Your vehicle has a Vehicle Certification Label affixed to the drivers side B-Pillar or the rear of the driver's door.

The label contains the following information:

- Name of manufacturer
- Month and year of manufacture
- Gross Vehicle Weight Rating (GVWR)
- Gross Axle Weight Rating (GAWR) front

- Gross Axle Weight Rating (GAWR) rear
- Vehicle Identification Number (VIN)
- Type of Vehicle
- Month Day and Hour of Manufacture (MDH)

The bar code allows a computer scanner to read the VIN.

Gross Vehicle Weight Rating (GVWR)

The GVWR is the total allowable weight of your vehicle. This includes driver, passengers, and cargo. The total load must be limited so that you do not exceed the GVWR.

Gross Axle Weight Rating (GAWR)

The GAWR is the maximum capacity of the front and rear axles. Distribute the load over the front and rear axles evenly. Make sure that you do not exceed either front or rear GAWR.

WARNING!

Because the front wheels steer the vehicle, it is important that you do not exceed the maximum front or rear GAWR. A dangerous driving condition can result if either rating is exceeded. You could lose control of the vehicle and have a collision.

Overloading

The load carrying components (axle, springs, tires, wheels, etc.) of your vehicle will provide satisfactory service as long as you do not exceed the GVWR and the front and rear GAWR.

The best way to figure out the total weight of your vehicle is to weigh it when it is fully loaded and ready for operation. Weigh it on a commercial scale to ensure that it is not over the GVWR.

Figure out the weight on the front and rear of the vehicle separately. It is important that you distribute the load evenly over the front and rear axles.

Overloading can cause potential safety hazards and shorten useful service life. Heavier axles or suspension components do not necessarily increase the vehicle's GVWR.

Loading

To load your vehicle properly, first figure out its empty weight, axle-by-axle and side-by-side. Store heavier items down low and be sure you distribute their weight as evenly as possible. Stow all loose items securely before driving. If weighing the loaded vehicle shows that you have exceeded either GAWR, but the total load is within the specified GVWR, you must redistribute the weight. Improper weight distribution can have an adverse effect on the way your vehicle steers and handles and the way the brakes operate.

TRAILER TOWING

In this section you will find safety tips and information on limits to the type of towing you can reasonably do with your vehicle. Before towing a trailer, carefully review this information to tow your load as efficiently and safely as possible.

To maintain the New Vehicle Limited Warranty coverage, follow the requirements and recommendations in this manual concerning vehicles used for trailer towing.

Common Towing Definitions

The following trailer towing related definitions will assist you in understanding the following information:

Gross Vehicle Weight Rating (GVWR)

The GVWR is the total allowable weight of your vehicle. This includes driver, passengers, cargo and tongue weight. The total load must be limited so that you do not

exceed the GVWR. Refer to "Vehicle Loading/Vehicle Certification Label" in "Starting and Operating" for further information.

Gross Trailer Weight (GTW)

The GTW is the weight of the trailer plus the weight of all cargo, consumables and equipment (permanent or temporary) loaded in or on the trailer in its "loaded and ready for operation" condition. The recommended way to measure GTW is to put your fully loaded trailer on a vehicle scale. The entire weight of the trailer must be supported by the scale.

Gross Combination Weight Rating (GCWR)

The GCWR is the total permissible weight of your vehicle and trailer when weighed in combination.

Gross Axle Weight Rating (GAWR)

The GAWR is the maximum capacity of the front and rear axles. Distribute the load over the front and rear axles evenly. Make sure that you do not exceed either front or rear GAWR. Refer to "Vehicle Loading/Vehicle Certification Label" in "Starting and Operating" for further information.

WARNING!

It is important that you do not exceed the maximum front or rear GAWR. A dangerous driving condition can result if either rating is exceeded. You could lose control of the vehicle and have a collision.

Tongue Weight (TW)

The tongue weight is the downward force exerted on the hitch ball by the trailer. In most cases it should not be less than 10% of the trailer load. You must consider this as part of the load on your vehicle.

Frontal Area

The frontal area is the maximum height multiplied by the maximum width of the front of a trailer.

Trailer Sway Control — Electronic

Refer to "Electronic Brake Control System/Trailer Sway Control (TSC)" in "Starting and Operating" for further information.

Trailer Sway Control — Mechanical

The trailer sway control is a telescoping link that can be installed between the hitch receiver and the trailer tongue that typically provides adjustable friction associated with the telescoping motion to dampen any unwanted trailer swaying motions while traveling.

Weight-Carrying Hitch

A weight-carrying hitch supports the trailer tongue weight, just as if it were luggage located at a hitch ball or some other connecting point of the vehicle. These kinds of hitches are the most popular on the market today and they are commonly used to tow small and medium sized trailers.

Weight-Distributing Hitch

A weight-distributing system works by applying leverage through spring (load) bars. They are typically used for heavier loads to distribute trailer tongue weight to the tow vehicle's front axle and the trailer axle(s). When used in accordance with the manufacturer's directions, it provides for a more level ride, offering more consistent steering and brake control thereby enhancing towing safety. The addition of a friction/hydraulic sway control also dampens sway caused by traffic and crosswinds and contributes positively to tow vehicle and trailer stability. Trailer sway control and a weight distributing (load equalizing) hitch are recommended for heavier Tongue Weights (TW) and may be required depending on vehicle

and trailer configuration/loading to comply with Gross Axle Weight Rating (GAWR) requirements.

WARNING!

- **An improperly adjusted Weight Distributing Hitch system may reduce handling, stability, braking performance, and could result in a collision.**
- **Weight Distributing Systems may not be compatible with Surge Brake Couplers. Consult with your hitch and trailer manufacturer or a reputable Recreational Vehicle dealer for additional information.**

Trailer Hitch Classification

The following chart provides the industry standard for the maximum trailer weight a given trailer hitch class can tow and should be used to assist you in selecting the correct trailer hitch for your intended towing condition.

Trailer Hitch Classification Definitions	
Class	**Max. Trailer Hitch Industry Standards**
Class I - Light Duty	2,000 lbs (907 kg)
Class II - Medium Duty	3,500 lbs (1 587 kg)
Class III - Heavy Duty	5,000 lbs (2 268 kg)
Class IV - Extra Heavy Duty	10,000 lbs (4 540 kg)
Refer to the “Trailer Towing Weights (Maximum Trailer Weight Ratings)” chart for the Maximum Gross Trailer Weight (GTW) towable for your given drivetrain.	
All trailer hitches should be professionally installed on your vehicle.	

Trailer Towing Weights (Maximum Trailer Weight Ratings)

The following chart provides the maximum trailer weight ratings towable for your given drivetrain:

Engine/Transmission	GCWR (Gross Combined Wt. Rating)	Frontal Area	Max. GTW (Gross Trailer Wt.)	Max. Tongue Wt.
2.4L/Automatic	6,000 lbs (2 722 kg)	22 sq ft (2.0 sq m)	1,000 lbs (454 kg) which includes up to 5 persons & Luggage	100 lbs (45 kg)
3.6L/Automatic	7,300 lbs (3 311 kg)	32 sq ft (3.0 sq m)	2,500 lbs (1 134 kg) which includes 1 to 2 persons & Luggage	200 lbs (91 kg)
	7,300 lbs (3 311 kg)	32 sq ft (3.0 sq m)	2,000 lbs (907 kg) which includes 3 to 4 persons & Luggage	150 lbs (68 kg)
	7,300 lbs (3 311 kg)	32 sq ft (3.0 sq m)	1,500 lbs (680 kg) which includes 5 to 7 persons & Luggage	100 lbs (45 kg) * Except for AWD models

NOTE:

- The trailer tongue weight must be considered as part of the combined weight of occupants and cargo, and should never exceed the weight referenced on the Tire and Loading Information placard. Refer to "Tire Safety Information" in "Starting and Operating" for further information.
- * For All Wheel Drive (AWD) models carrying 5 to 7 persons and luggage will exceed the rear Gross Axle Weight Rating (GAWR) and therefore should not be attempted.

Trailer And Tongue Weight

Always load a trailer with 60% to 65% of the weight in the front of the trailer. This places 10% to 15% of the Gross Trailer Weight (GTW) on the tow hitch of your vehicle. Loads balanced over the wheels or heavier in the rear can cause the trailer to sway **severely** side to side which will cause loss of control of the vehicle and trailer. Failure to load trailers heavier in front is the cause of many trailer collisions.

Never exceed the maximum tongue weight stamped on your bumper or trailer hitch.

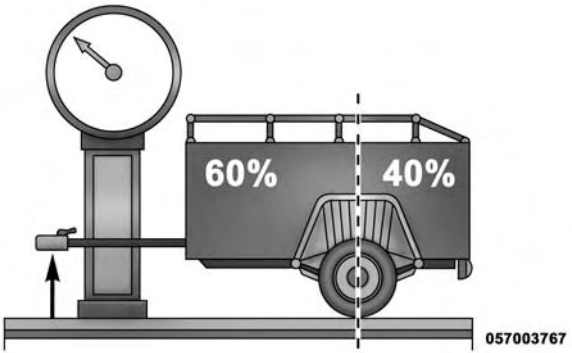

Consider the following items when computing the weight on the rear axle of the vehicle:

- The tongue weight of the trailer.
- The weight of any other type of cargo or equipment put in or on your vehicle.
- The weight of the driver and all passengers.

NOTE: Remember that everything put into or on the trailer adds to the load on your vehicle. Also, additional factory-installed options or authorized dealer-installed options must be considered as part of the total load on your vehicle. Refer to the "Tire and Loading Information" placard for the maximum combined weight of occupants and cargo for your vehicle.

Towing Requirements

To promote proper break-in of your new vehicle drive-train components the following guidelines are recommended:

CAUTION!

- **Do not tow a trailer at all during the first 500 miles (805 km) the new vehicle is driven. The engine, axle or other parts could be damaged.**
- **Then, during the first 500 miles (805 km) that a trailer is towed, do not drive over 50 mph (80 km/h) and do not make starts at full throttle. This helps the engine and other parts of the vehicle wear in at the heavier loads.**

Perform the maintenance listed in the "Maintenance Schedule". Refer to "Maintenance Schedule" for further information. When towing a trailer, never exceed the GAWR, or GCWR, ratings.

WARNING!

Improper towing can lead to a collision. Follow these guidelines to make your trailer towing as safe as possible:

- **Make certain that the load is secured in the trailer and that it will not shift during travel. When trailering cargo that is not fully secured, dynamic load shifts can occur that may be difficult for the driver to control. You could lose control of your vehicle and have a collision.**
- **When hauling cargo or towing a trailer, do not overload your vehicle or trailer. Overloading can cause a loss of control, poor performance, or damage to brakes, axle, engine, transmission, steering, suspension, chassis structure, or tires.**

(Continued)

WARNING! ***(Continued)***

- **Safety chains must always be used between your vehicle and trailer. Always connect the chains to the frame or hook retainers of the vehicle hitch. Cross the chains under the trailer tongue and allow enough slack for turning corners.**
- **Vehicles with trailers should not be parked on a grade. When parking, apply the parking brake on the tow vehicle. Put the tow vehicle automatic transmission in PARK. Always, block or "chock" the trailer wheels.**
- **GCWR must not be exceeded.**

(Continued)

WARNING! ***(Continued)***

- **Total weight must be distributed between the tow vehicle and the trailer such that the following four ratings are not exceeded:**

  1. GVWR

  2. GTW

  3. GAWR

  4. Tongue weight rating for the trailer hitch utilized.

Towing Requirements — Tires

- Do not attempt to tow a trailer while using a compact spare tire.
- Proper tire inflation pressures are essential to the safe and satisfactory operation of your vehicle. Refer to "Tires – General Information" in "Starting and Operating" for proper tire inflation procedures.
- Check the trailer tires for proper tire inflation pressures before trailer usage.
- Check for signs of tire wear or visible tire damage before towing a trailer. Refer to "Tires – General Information" in "Starting and Operating" for the proper inspection procedure.
- When replacing tires, refer to "Tires – General Information" in "Starting and Operating" for information on replacement tires and for the proper tire replacement procedures. Replacing tires with a higher load carrying capacity will not increase the vehicle's GVWR and GAWR limits.

Towing Requirements — Trailer Brakes

- Do **not** interconnect the hydraulic brake system or vacuum system of your vehicle with that of the trailer. This could cause inadequate braking and possible personal injury.
- An electronically actuated trailer brake controller is required when towing a trailer with electronically actuated brakes. When towing a trailer equipped with a hydraulic surge actuated brake system, an electronic brake controller is not required.
- Trailer brakes are recommended for trailers over 1,000 lbs (454 kg) and required for trailers in excess of 2,000 lbs (907 kg).

WARNING!

- **Do not connect trailer brakes to your vehicle's hydraulic brake lines. It can overload your brake system and cause it to fail. You might not have brakes when you need them and could have a collision.**
- **Towing any trailer will increase your stopping distance. When towing you should allow for additional space between your vehicle and the vehicle in front of you. Failure to do so could result in a collision.**

CAUTION!

If the trailer weighs more than 1,000 lbs (454 kg) loaded, it should have its own brakes and they should be of adequate capacity. Failure to do this could lead to accelerated brake lining wear, higher brake pedal effort, and longer stopping distances.

Towing Requirements — Trailer Lights And Wiring

Whenever you pull a trailer, regardless of the trailer size, stoplights and turn signals on the trailer are required for motoring safety.

The Trailer Tow Package may include a four- and seven-pin wiring harness. Use a factory approved trailer harness and connector.

NOTE: Do not cut or splice wiring into the vehicles wiring harness.

The electrical connections are all complete to the vehicle but you must mate the harness to a trailer connector. Refer to the following illustrations.

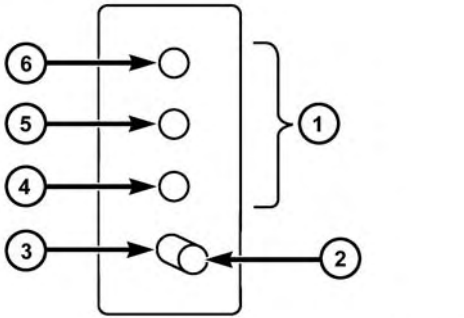

Four-Pin Connector

1 — Female Pins
2 — Male Pin
3 — Ground
4 — Park
5 — Left Stop/Turn
6 — Right Stop/Turn

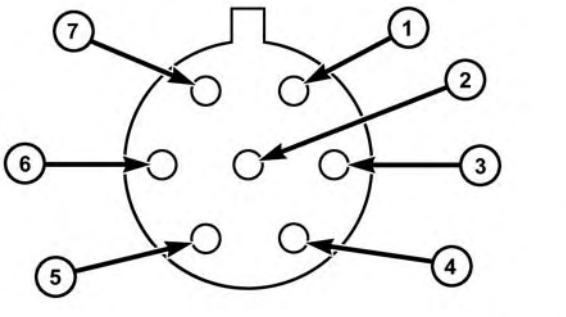

Seven-Pin Connector

1 — Battery
2 — Backup Lamps
3 — Right Stop/Turn
4 — Electric Brakes
5 — Ground
6 — Left Stop/Turn
7 — Running Lamps

Towing Tips

Before setting out on a trip, practice turning, stopping, and backing up the trailer in an area located away from heavy traffic.

Automatic Transmission

The DRIVE range can be selected when towing. However, if frequent shifting occurs while in DRIVE, use the Autostick® shift control to manually select a lower gear.

NOTE: Using a lower gear while operating the vehicle under heavy loading conditions will improve performance and extend transmission life by reducing excessive shifting and heat build up. This action will also provide better engine braking.

If you REGULARLY tow a trailer for more than 45 minutes of continuous operation, then change the transmission fluid and filter as specified for "police, taxi, fleet, or frequent trailer towing". Refer to the "Maintenance Schedule" for the proper maintenance intervals.

NOTE: Check the four-speed automatic transmission fluid level before towing. The six-speed transmission does not require a fluid level check before towing. If, however, you notice fluid leakage or transmission malfunction, see your authorized dealer immediately for assistance.

Electronic Speed Control — If Equipped

- Do not use in hilly terrain or with heavy loads.
- When using the speed control, if you experience speed drops greater than 10 mph (16 km/h), disengage until you can get back to cruising speed.
- Use speed control in flat terrain and with light loads to maximize fuel efficiency.

AutoStick®

- When using the AutoStick® shift control, select the highest gear that allows for adequate performance and avoids frequent downshifts. For example, choose “4” if the desired speed can be maintained. Choose “3” or “2” if needed to maintain the desired speed.
- To prevent excess heat generation, avoid continuous driving at high RPM. Reduce vehicle speed as necessary to avoid extended driving at high RPM. Return to a higher gear or vehicle speed when grade and road conditions allow.

Cooling System

To reduce potential for engine and transmission overheating, take the following actions:

City Driving

When stopped for short periods, shift the transmission into NEUTRAL and increase engine idle speed.

Highway Driving

Reduce speed.

Air Conditioning

Turn off temporarily.

RECREATIONAL TOWING (BEHIND MOTORHOME, ETC.)

Towing This Vehicle Behind Another Vehicle

Towing Condition	Wheel OFF the Ground	FWD Models	AWD Models
Flat Tow	NONE	**NOT ALLOWED**	**NOT ALLOWED**
Dolly Tow	Front	OK	**NOT ALLOWED**
	Rear	**NOT ALLOWED**	**NOT ALLOWED**
On Trailer	ALL	OK	OK

Recreational Towing — Front-Wheel Drive (FWD) Models

Recreational towing is allowed **ONLY** if the front wheels are **OFF** the ground. This may be accomplished using a tow dolly or vehicle trailer. If using a tow dolly, follow this procedure:

1. Properly secure the dolly to the tow vehicle, following the dolly manufacturer's instructions.
2. Drive the front wheels onto the tow dolly.
3. Firmly apply the parking brake. Place the transmission in PARK.
4. Properly secure the front wheels to the dolly, following the dolly manufacturer's instructions.
5. Release the parking brake.

CAUTION!

- **DO NOT flat tow this vehicle. Damage to the drivetrain will result. If this vehicle requires towing, make sure the drive wheels are OFF the ground.**
- **Towing this vehicle in violation of the above requirements can cause severe transmission damage. Damage from improper towing is not covered under the New Vehicle Limited Warranty.**

Recreational Towing — All-Wheel Drive (AWD) Models

Recreational towing (with all four wheels on the ground, or using a towing dolly) is **NOT ALLOWED**. The only acceptable method for towing this vehicle (behind another vehicle) is on a vehicle trailer with all four wheels **OFF** the ground.

CAUTION!

Towing this vehicle with ANY of its wheels on the ground can cause severe transmission and/or power transfer unit damage. Damage from improper towing is not covered under the New Vehicle Limited Warranty.

WHAT TO DO IN EMERGENCIES

CONTENTS

■ HAZARD WARNING FLASHERS 511

■ IF YOUR ENGINE OVERHEATS 511

□ 2.4L Engine — If Equipped. 512

■ WHEEL AND TIRE TORQUE SPECIFICATIONS 513

□ Torque Specifications 513

■ JACKING AND TIRE CHANGING 514

□ Jack Location 515

□ Spare Tire Location 515

□ Preparations For Jacking 516

□ Spare Tire Removal 516

□ Spare Tire Stowage 518

□ Jacking Instructions 519

□ Road Tire Installation. 525

■ JUMP-STARTING 528

□ Preparations For Jump-Start 528

□ Jump-Starting Procedure 530

■ FREEING A STUCK VEHICLE 532

■ SHIFT LEVER OVERRIDE 533

■ TOWING A DISABLED VEHICLE 535
- □ All-Wheel Drive (AWD) Models 536
- □ Front-Wheel Drive (FWD) Models 537

HAZARD WARNING FLASHERS

The Hazard Warning flasher switch is located in the instrument panel switch bank, above the climate controls.

Press the switch to turn on the Hazard Warning flasher. When the switch is activated, all directional turn signals will flash on and off to warn oncoming traffic of an emergency. Press the switch a second time to turn off the Hazard Warning flashers.

This is an emergency warning system and it should not be used when the vehicle is in motion. Use it when your vehicle is disabled and it is creating a safety hazard for other motorists.

When you must leave the vehicle to seek assistance, the Hazard Warning flashers will continue to operate even though the ignition is placed in the OFF position.

NOTE: With extended use the Hazard Warning flashers may wear down your battery.

IF YOUR ENGINE OVERHEATS

In any of the following situations, you can reduce the potential for overheating by taking the appropriate action.

- On the highways — slow down.
- In city traffic — while stopped, place the transmission in NEUTRAL, but do not increase engine idle speed.

NOTE: There are steps that you can take to slow down an impending overheat condition:

- If your air conditioner (A/C) is on, turn it off. The A/C system adds heat to the engine cooling system and turning the A/C off can help remove this heat.
- You can also turn the temperature control to maximum heat, the mode control to floor and the blower control

to High. This allows the heater core to act as a supplement to the radiator and aids in removing heat from the engine cooling system.

CAUTION!

Driving with a hot cooling system could damage your vehicle. If the temperature gauge reads "H," safely pull over and stop the vehicle. Idle the vehicle with the A/C turned off until the pointer drops back into the normal range. If the pointer remains on the "H," and you hear continuous chimes, turn the engine OFF immediately, and call for service.

WARNING!

You or others can be badly burned by hot engine coolant (antifreeze) or steam from your radiator. If

(Continued)

WARNING! ***(Continued)***

you see or hear steam coming from under the hood, do not open the hood until the radiator has had time to cool. Never try to open a cooling system pressure cap when the radiator or coolant bottle is hot.

2.4L Engine — If Equipped

On hot days the engine oil temperature may become too hot during sustained high-speed driving or if towing a trailer up long grades. If this happens, a HOTOIL message will flash in the odometer and the vehicle speed will be reduced to 48 mph (77 km/h) maximum until the engine oil temperature is reduced.

NOTE: The maximum vehicle speed is reduced to 48 mph (77 km/h), you may reduce vehicle speed further as needed. Once the engine oil temperature is reduced, you may continue to drive normally

WHEEL AND TIRE TORQUE SPECIFICATIONS

Proper lug nut/bolt torque is very important to ensure that the wheel is properly mounted to the vehicle. Any time a wheel has been removed and reinstalled on the vehicle the lug nuts/bolts should be torqued using a properly calibrated torque wrench.

Torque Specifications

Lug Nut/Bolt Torque	**Lug Nut/ Bolt Size	Lug Nut/ Bolt Socket Size
100 Ft-Lbs (135 N·m)	M12 x 1.25	19 mm

**Use only Chrysler recommended lug nuts/bolts and clean or remove any dirt or oil before tightening.

Inspect the wheel mounting surface prior to mounting the tire and remove any corrosion or loose particles.

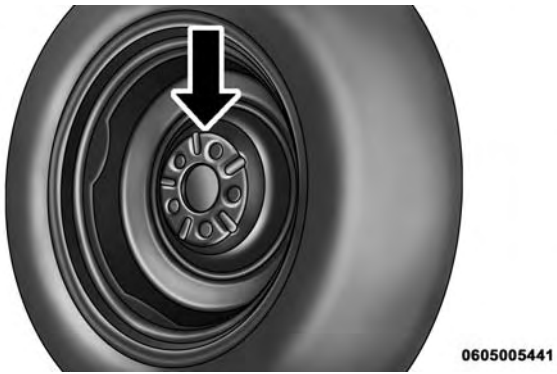

Wheel Mounting Surface

Tighten the lug nuts/bolts in a star pattern until each nut/bolt has been tightened twice.

0605006372

Torque Patterns

After 25 miles (40 km) check the lug nut/bolt torque to be sure that all the lug nuts/bolts are properly seated against the wheel.

WARNING!

To avoid the risk of forcing the vehicle off the jack, do not tighten the lug nuts fully until the vehicle has been lowered. Failure to follow this warning may result in personal injury.

JACKING AND TIRE CHANGING

WARNING!

- **Do not attempt to change a tire on the side of the vehicle close to moving traffic. Pull far enough off the road to avoid the danger of being hit when operating the jack or changing the wheel.**

(Continued)

WARNING! *(Continued)*

- **Being under a jacked-up vehicle is dangerous. The vehicle could slip off the jack and fall on you. You could be crushed. Never put any part of your body under a vehicle that is on a jack. If you need to get under a raised vehicle, take it to a service center where it can be raised on a lift.**
- **Never start or run the engine while the vehicle is on a jack.**
- **The jack is designed to be used as a tool for changing tires only. The jack should not be used to lift the vehicle for service purposes. The vehicle should be jacked on a firm level surface only. Avoid ice or slippery areas.**

Jack Location

The jack and jack-handle are stowed underneath a cover in the rear storage bin in the cargo area.

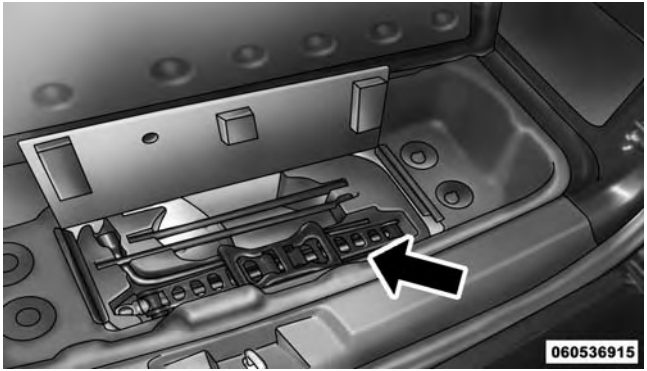

Jack Storage Location

Spare Tire Location

The spare tire is stowed underneath the rear of the vehicle and is held in place by means of a cable winch mechanism.

Preparations For Jacking

1. Park the vehicle on a firm, level surface as far from the edge of the roadway as possible. Avoid icy or slippery areas.

WARNING!

Do not attempt to change a tire on the side of the vehicle close to moving traffic. Pull far enough off the road to avoid the danger of being hit when operating the jack or changing the wheel.

2. Turn on the Hazard Warning flashers.
3. Set the parking brake.
4. Place the shift lever in PARK.
5. Turn OFF the ignition.
6. Block both the front and rear of the wheel diagonally opposite of the jacking position. For example, if changing the right front tire, block the left rear wheel.

NOTE: Passengers should not remain in the vehicle when the vehicle is being jacked.

Spare Tire Removal

NOTE: On seven-passenger models, fold the third-row passenger seats flat. This will provide more space when accessing the jacking tools and when operating the winch mechanism.

1. Remove the jack-handle components 1, 2 and 3 from storage and assemble them.

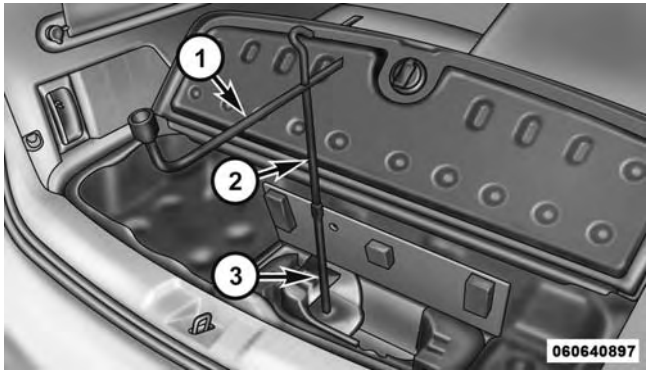

Lowering/Raising Spare Tire

1 — Spare Tire Jack Handle
2 — Extension 1
3 — Extension 2

NOTE: Assemble components 2 and 3 by seating the small ball at the end of component 2 in the small hole at the end of component 3. This will lock these components together. Assemble components 1 and 2 so that the wheel nut socket at the end of component 1 faces upward when seated on component 2. This will make it easier to rotate the assembly when operating the winch mechanism.

2. Fit the assembled jack-handle over the winch drive nut located in the jack storage area. Rotate the jack-handle assembly counterclockwise until the spare tire is on the ground with enough cable slack to allow you to pull the spare tire out from underneath the vehicle.

CAUTION!

The winch mechanism is designed for use with the jack-handle only. Use of an air wrench or other power tools is not recommended and it can damage the winch.

3. Pull the spare tire out from underneath the vehicle and raise it upright so the tire's tread is on the ground.
4. Tilt the retainer at the end of the winch cable and remove it from the center of the wheel.

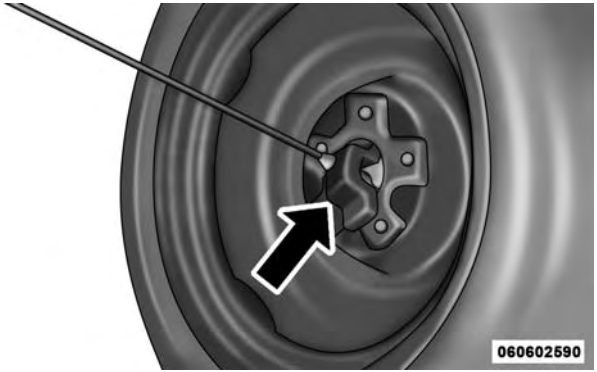

Spare Tire Retainer

Spare Tire Stowage

NOTE: Refer to "Spare Tire Removal" for information on assembling the winch tools.

1. Place the spare tire near to the winch cable. Hold the spare upright so that the tire's tread is on the ground and the valve stem is at the top of the wheel facing away from the rear of the vehicle.
2. Tilt the retainer at the end of the winch cable and drop it through the center of the wheel. Then place the spare tire with the cable and retainer underneath the vehicle.
3. Fit the assembled jack-handle over the winch drive nut. Rotate the jack-handle assembly clockwise to raise the spare tire into the storage area. Continue to rotate the jack-handle assembly until you hear the winch mechanism click three times. It cannot be over tightened. Push against the tire several times to be sure it is held securely in place.

Jacking Instructions

WARNING!

Carefully follow these tire changing warnings to help prevent personal injury or damage to your vehicle:

- **Always park on a firm, level surface as far from the edge of the roadway as possible before raising the vehicle.**
- **Turn on the Hazard Warning flasher.**
- **Block the wheel diagonally opposite the wheel to be raised.**
- **Set the parking brake firmly and set an automatic transmission in PARK.**
- **Never start or run the engine with the vehicle on a jack.**

(Continued)

WARNING! ***(Continued)***

- **Do not let anyone sit in the vehicle when it is on a jack.**
- **Do not get under the vehicle when it is on a jack. If you need to get under a raised vehicle, take it to a service center where it can be raised on a lift.**
- **Only use the jack in the positions indicated and for lifting this vehicle during a tire change.**
- **If working on or near a roadway, be extremely careful of motor traffic.**
- **To assure that spare tires, flat or inflated, are securely stowed, spares must be stowed with the valve stem facing the ground.**

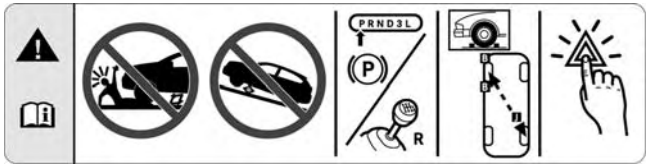

Jack Warning Label

CAUTION!

Do not attempt to raise the vehicle by jacking on locations other than those indicated in the Jacking Instructions for this vehicle.

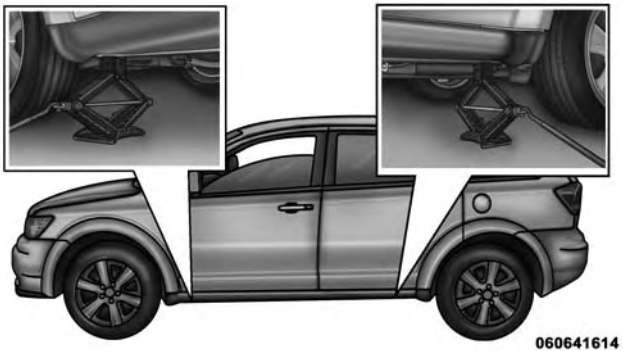

Jacking Locations

1. Remove the spare tire, jack, and jack-handle from stowage.
2. Loosen, but do not remove, the wheel nuts on the wheel with the flat tire. Turn the wheel nuts counter-clockwise one turn while the wheel is still on the ground.

3. Place the jack in the notches underneath the lift area that is closest to the flat tire. Center the jack saddle between the drain flute formations on the sill flange. Turn the jack screw clockwise to firmly engage the jack saddle with the lift area of the sill flange.

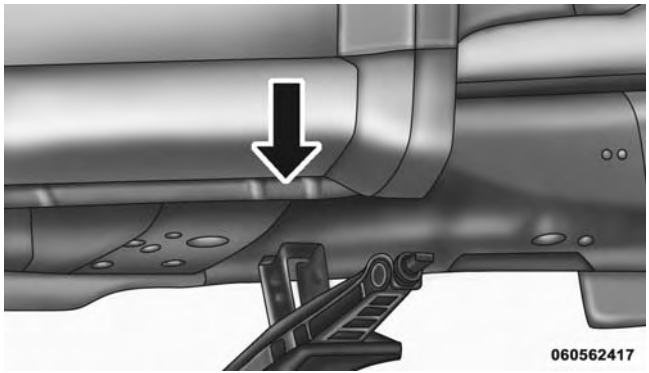

Front Jacking Location

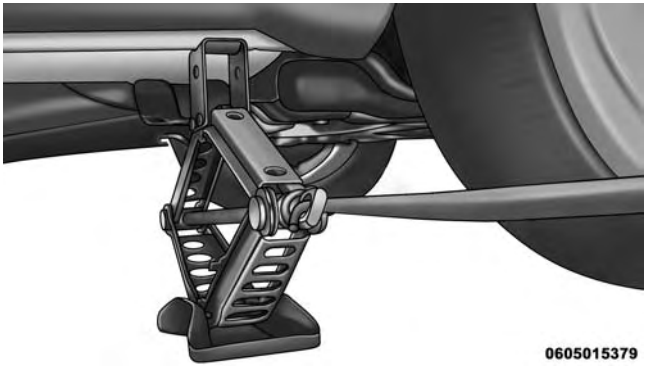

Front Jack Engaged With Jack Handle

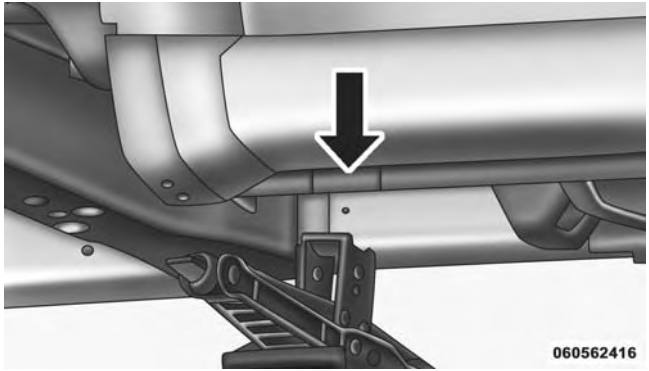

Rear Jacking Location

Rear Jack Engaged With Jack Handle

4. Raise the vehicle by turning the jack screw clockwise with the jack handle. Raise the vehicle until the tire just clears the road surface and enough clearance is obtained to install the spare tire. Minimum tire lift provides maximum stability.

WARNING!

Raising the vehicle higher than necessary can make the vehicle less stable. It could slip off the jack and hurt someone near it. Raise the vehicle only enough to remove the tire.

5. Remove the wheel nuts. For vehicles so equipped, remove the wheel cover from the wheel by hand. Do not pry the wheel cover off. Then pull the wheel off the hub.

WARNING!

To avoid possible personal injury, handle the wheel covers with care to avoid contact with any sharp edges.

6. Install the spare tire.

CAUTION!

Be sure to mount the spare tire with the valve stem facing outward. The vehicle could be damaged if the spare tire is mounted incorrectly.

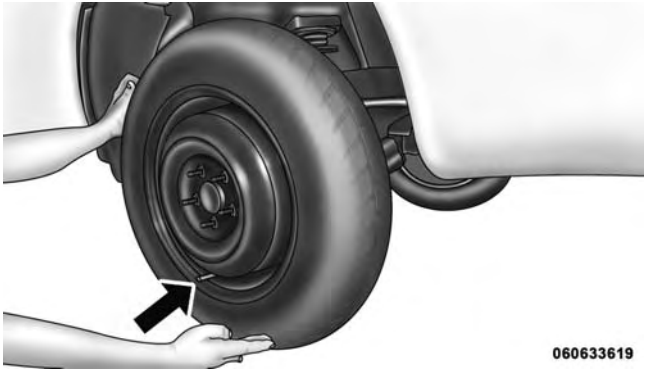

Mounting Spare Tire

NOTE:

- For vehicles so equipped, do not attempt to install a center cap or wheel cover on the compact spare.
- Refer to "Compact Spare Tire" and to "Limited-Use Spare" under "Tires — General Information" in "Starting and Operating" for additional warnings, cautions, and information about the spare tire, its use, and operation.

7. Install the wheel nuts with the cone-shaped end of the nut toward the wheel. Lightly tighten the wheel nuts.

WARNING!

To avoid the risk of forcing the vehicle off the jack, do not tighten the lug nuts fully until the vehicle has been lowered. Failure to follow this warning may result in personal injury.

8. Lower the vehicle by turning the jack screw counterclockwise with the jack handle.
9. Finish tightening the lug nuts. Push down on the wrench while at the end of the handle for increased leverage. Tighten the lug nuts in a star pattern until each nut has been tightened twice. For the correct lug nut torque refer to Torque Specifications in this section. If in doubt about the correct tightness, have them checked with a torque wrench by your authorized dealer or service station.
10. Lower the jack to its fully closed position.
11. Place the deflated (flat) tire in the cargo area. **Do not stow the deflated tire in the spare tire stowage location.** Have the deflated (flat) tire repaired or replaced as soon as possible.

12. To stow the winch cable and retainer, fit the assembled jack-handle over the winch drive nut. Rotate the jack-handle assembly clockwise until you hear the winch mechanism click three times. It cannot be over tightened.
13. Stow the jack-handle and jack. Remove the wheel blocks from the vehicle and release the park brake.
14. Check the tire pressure as soon as possible. Adjust the tire pressure as required.

Road Tire Installation

Vehicles Equipped With Wheel Covers

1. Mount the road tire on the axle.
2. To ease the installation process for steel wheels with wheel covers, install two lug nuts on the mounting studs which are on each side of the valve stem. Install the lug nuts with the cone shaped end of the nut toward the wheel. Lightly tighten the lug nuts.

WARNING!

To avoid the risk of forcing the vehicle off the jack, do not tighten the lug nuts fully until the vehicle has been lowered. Failure to follow this warning may result in personal injury.

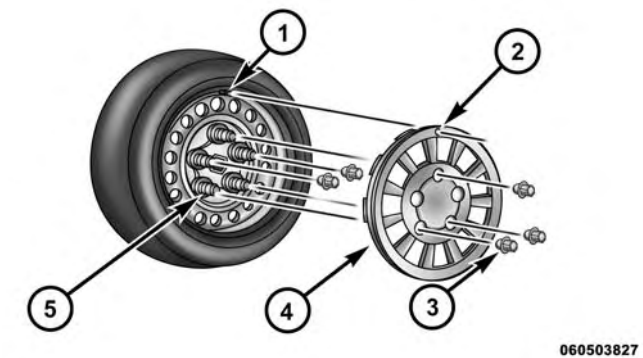

Tire And Wheel Cover Or Center Cap

1 — Valve Stem
2 — Valve Notch
3 — Wheel Lug Nut
4 — Wheel Cover
5 — Mounting Stud

3. Align the valve notch in the wheel cover with the valve stem on the wheel. Install the cover by hand, snapping the cover over the two lug nuts. Do not use a hammer or excessive force to install the cover.
4. Install the remaining lug nuts with the cone shaped end of the nut toward the wheel. Lightly tighten the lug nuts.

WARNING!

To avoid the risk of forcing the vehicle off the jack, do not tighten the lug nuts fully until the vehicle has been lowered. Failure to follow this warning may result in personal injury.

5. Lower the vehicle to the ground by turning the jack handle counterclockwise.
6. Finish tightening the lug nuts. Push down on the wrench while at the end of the handle for increased leverage. Tighten the lug nuts in a star pattern until each nut has been tightened twice. For the correct lug

nut torque refer to Torque Specifications in this section. If in doubt about the correct tightness, have them checked with a torque wrench by your authorized dealer or service station.

7. After 25 miles (40 km) check the lug nut torque with a torque wrench to ensure that all lug nuts are properly seated against the wheel.

Vehicles Without Wheel Covers

1. Mount the road tire on the axle.
2. Install the remaining lug nuts with the cone shaped end of the nut toward the wheel. Lightly tighten the lug nuts.

WARNING!

To avoid the risk of forcing the vehicle off the jack, do not tighten the lug nuts fully until the vehicle has been lowered. Failure to follow this warning may result in personal injury.

3. Lower the vehicle to the ground by turning the jack handle counterclockwise.
4. Finish tightening the lug nuts. Push down on the wrench while at the end of the handle for increased leverage. Tighten the lug nuts in a star pattern until each nut has been tightened twice. For proper lug nut torque refer to Torque Specifications in this secton. If in doubt about the correct tightness, have them checked with a torque wrench by your authorized dealer or service station.

5. After 25 miles (40 km) check the lug nut torque with a torque wrench to ensure that all lug nuts are properly seated against the wheel.

JUMP-STARTING

If your vehicle has a discharged battery it can be jump-started using a set of jumper cables and a battery in another vehicle or by using a portable battery booster pack. Jump-starting can be dangerous if done improperly so please follow the procedures in this section carefully.

WARNING!

Do not attempt jump-starting if the battery is frozen. It could rupture or explode and cause personal injury.

CAUTION!

Do not use a portable battery booster pack or any other booster source with a system voltage greater than 12 Volts or damage to the battery, starter motor, alternator or electrical system may occur.

NOTE: When using a portable battery booster pack follow the manufacturer's operating instructions and precautions.

Preparations For Jump-Start

The battery in your vehicle is located between the left front headlight assembly and the left front wheel splash shield. To allow jump-starting, there are remote battery posts located on the left side of the engine compartment.

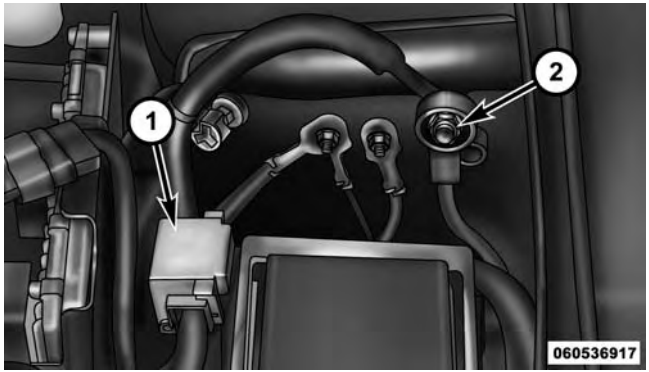

Remote Battery Posts

1 — Remote Positive (+) Post (Covered With Protective Cap)
2 — Remote Negative (-) Post

WARNING!

- **Take care to avoid the radiator cooling fan whenever the hood is raised. It can start anytime the ignition switch is ON. You can be injured by moving fan blades.**
- **Remove any metal jewelry such as rings, watch bands and bracelets that could make an inadvertent electrical contact. You could be seriously injured.**
- **Batteries contain sulfuric acid that can burn your skin or eyes and generate hydrogen gas which is flammable and explosive. Keep open flames or sparks away from the battery.**

1. Set the parking brake, shift the automatic transmission into PARK and turn the ignition to LOCK.
2. Turn off the heater, radio, and all unnecessary electrical accessories.

3. Remove the protective cover over the remote positive **(+)** battery post. To remove the cover, press the locking tab and pull upward on the cover.

4. If using another vehicle to jump-start the battery, park the vehicle within the jumper cables reach, set the parking brake and make sure the ignition is OFF.

WARNING!

Do not allow vehicles to touch each other as this could establish a ground connection and personal injury could result.

Jump-Starting Procedure

WARNING!

Failure to follow this jump-starting procedure could result in personal injury or property damage due to battery explosion.

CAUTION!

Failure to follow these procedures could result in damage to the charging system of the booster vehicle or the discharged vehicle.

Connecting The Jumper Cables

1. Connect the positive **(+)** end of the jumper cable to the remote positive **(+)** post of the discharged vehicle.

2. Connect the opposite end of the positive **(+)** jumper cable to the positive **(+)** post of the booster battery.

3. Connect the negative end **(-)** of the jumper cable to the negative **(-)** post of the booster battery.

4. Connect the opposite end of the negative **(-)** jumper cable to the remote negative **(-)** post of the vehicle with the discharged battery.

WARNING!

Do not connect the jumper cable to the negative (-) post of the discharged battery. The resulting electrical spark could cause the battery to explode and could result in personal injury. Only use the specific ground point, do not use any other exposed metal parts.

5. Start the engine in the vehicle that has the booster battery, let the engine idle a few minutes, and then start the engine in the vehicle with the discharged battery.

6. Once the engine is started, remove the jumper cables in the reverse sequence:

Disconnecting The Jumper Cables

1. Disconnect the negative **(-)** jumper cable from the remote negative **(-)** post of the vehicle with the discharged battery.

2. Disconnect the negative end **(-)** of the jumper cable from the negative **(-)** post of the booster battery.

3. Disconnect the opposite end of the positive **(+)** jumper cable from the positive **(+)** post of the booster battery.

4. Disconnect the positive **(+)** end of the jumper cable from the remote positive **(+)** post of the discharged vehicle.

5. Reinstall the protective cover over the remote positive **(+)** battery post of the discharged vehicle.

If frequent jump-starting is required to start your vehicle, you should have the battery and charging system inspected at your authorized dealer.

CAUTION!

Accessories plugged into the vehicle power outlets draw power from the vehicle's battery, even when not in use (i.e., cellular phones, etc.). Eventually, if plugged in long enough without engine operation, the vehicle's battery will discharge sufficiently to degrade battery life and/or prevent the engine from starting.

FREEING A STUCK VEHICLE

If your vehicle becomes stuck in mud, sand, or snow, it can often be moved using a rocking motion. Turn the steering wheel right and left to clear the area around the front wheels. Then shift back and forth between DRIVE and REVERSE while gently pressing the accelerator pedal. Use the least amount of accelerator pedal pressure that will maintain the rocking motion, without spinning the wheels or racing the engine.

CAUTION!

Racing the engine or spinning the wheels may lead to transmission overheating and failure. Allow the engine to idle with the transmission in NEUTRAL for at least one minute after every five rocking-motion cycles. This will minimize overheating and reduce the risk of transmission failure during prolonged efforts to free a stuck vehicle.

NOTE: Press the "ESC Off" switch, to place the Electronic Stability Control (ESC) system in "ESC Partial Off" mode, before rocking the vehicle. Refer to "Electronic Brake Control" in "Starting And Operating" for further information. Once the vehicle has been freed, press the "ESC Off" switch again to restore "ESC On" mode.

CAUTION!

- **When "rocking" a stuck vehicle by shifting between DRIVE and REVERSE, do not spin the wheels faster than 15 mph (24 km/h), or drivetrain damage may result.**
- **Revving the engine or spinning the wheels too fast may lead to transmission overheating and failure. It can also damage the tires. Do not spin the wheels above 30 mph (48 km/h) while in gear (no transmission shifting occurring).**

WARNING!

Fast spinning tires can be dangerous. Forces generated by excessive wheel speeds may cause damage, or even failure, of the axle and tires. A tire could explode and injure someone. Do not spin your vehicle's wheels faster than 30 mph (48 km/h) or for longer than 30 seconds continuously without stopping when you are stuck and do not let anyone near a spinning wheel, no matter what the speed.

SHIFT LEVER OVERRIDE

If a malfunction occurs and the shift lever cannot be moved out of the PARK position, you can use the following procedure to temporarily move the shift lever:

1. Turn the engine OFF.
2. Firmly apply the parking brake.

3. Open the center console and remove the shift lever override access cover (located in the front lower right corner of the console storage bin).

Shift Lever Override Access Cover

4. Press and maintain firm pressure on the brake pedal.
5. Insert a screwdriver or similar small tool into the access port, and push and hold the override release lever forward.
6. Move the shift lever to the NEUTRAL position.
7. The vehicle may then be started in NEUTRAL.
8. Reinstall the shift lever override access cover.

TOWING A DISABLED VEHICLE

This section describes procedures for towing a disabled vehicle using a commercial towing service.

Towing Condition	Wheel OFF the Ground	FWD MODELS	AWD MODELS
Flat Tow	NONE	**IF transmission is operable:** • Transmission in **NEUTRAL** • 25 mph (40 km/h) **max** speed • 15 miles (24 km) **max** distance	**NOT ALLOWED**
Wheel Lift Or Dolly Tow	Rear		**NOT ALLOWED**
	Front	OK	**NOT ALLOWED**
Flatbed	**ALL**	**BEST METHOD**	OK

Proper towing or lifting equipment is required to prevent damage to your vehicle. Use only tow bars and other equipment designed for this purpose, following equipment manufacturer's instructions. Use of safety chains is mandatory. Attach a tow bar or other towing device to main structural members of the vehicle, not to bumpers or associated brackets. State and local laws regarding vehicles under tow must be observed.

If you must use the accessories (wipers, defrosters, etc.) while being towed, the ignition must be in the ON/RUN position, not the ACC position.

If the key fob is unavailable, or the vehicle's battery is discharged, refer to "Shift Lever Override" in this section for instructions on shifting the transmission out of PARK for towing.

CAUTION!

- **Do not use sling type equipment when towing. Vehicle damage may occur.**
- **When securing the vehicle to a flat bed truck, do not attach to front or rear suspension components. Damage to your vehicle may result from improper towing.**

(Continued)

CAUTION! *(Continued)*

- **Do not push or tow this vehicle with another vehicle as damage to the bumper fascia and transmission may result.**
- **If the vehicle being towed requires steering, the ignition switch must be in the ACC or ON/RUN position, not in the LOCK/OFF position.**

All-Wheel Drive (AWD) Models

The manufacturer requires towing with all four wheels OFF the ground. Acceptable methods are to tow the vehicle on a flatbed, or with one end of vehicle raised and the opposite end on a towing dolly.

CAUTION!

Towing this vehicle in violation of the above requirements can cause severe transmission and/or power transfer unit damage. Damage from improper towing is not covered under the New Vehicle Limited Warranty.

Front-Wheel Drive (FWD) Models

The manufacturer recommends towing your vehicle with all four wheels **OFF** the ground using a flatbed.

If flatbed equipment is not available, and the transmission is operable, the vehicle may be flat towed (with all four wheels on the ground) under the following conditions:

- The transmission must be in NEUTRAL.
- The towing distance must not exceed 15 miles (24 km).
- The towing speed must not exceed 25 mph (40 km/h).

If the transmission is not operable, or the vehicle must be towed faster than 25 mph (40 km/h) or farther than 15 miles (24 km), it must be towed with the front wheels OFF the ground (using a flatbed truck, towing dolly, or wheel lift equipment with the front wheels raised).

CAUTION!

- **Towing this vehicle in violation of the above requirements can cause severe transmission damage. Damage from improper towing is not covered under the New Vehicle Limited Warranty.**

MAINTAINING YOUR VEHICLE

CONTENTS

- ENGINE COMPARTMENT — 2.4L 541
- ENGINE COMPARTMENT — 3.6L 542
- ONBOARD DIAGNOSTIC SYSTEM — OBD II . .543
  - Loose Fuel Filler Cap Message 543
- EMISSIONS INSPECTION AND MAINTENANCE PROGRAMS 544
- REPLACEMENT PARTS 545
- DEALER SERVICE 545
- MAINTENANCE PROCEDURES 546
  - Engine Oil 547
  - Engine Oil Filter 550
  - Engine Air Cleaner Filter 550
  - Maintenance-Free Battery 551
  - Air Conditioner Maintenance 552
  - A/C Air Filter — If Equipped 554
  - Body Lubrication 555
  - Windshield Wiper Blades 556
  - Adding Washer Fluid 558
  - Exhaust System 559
  - Cooling System 561

- Brake System 567
- Automatic Transmission 570
- Rear Drive Assembly (RDA) – AWD Models Only 574
- Power Transfer Unit (PTU) – AWD Models Only 574
- Appearance Care And Protection From Corrosion 575
- Cleaning The Cupholders 581

■ FUSES 581
- Interior Fuses 582
- Underhood Fuses (Power Distribution Center) . .585

■ REPLACEMENT BULBS 589

■ BULB REPLACEMENT 591
- Front Low/High Beam Headlamp, Turn Signal/Park Lamp, And Side Marker Lamp . .591
- Front Fog Lamp 592
- Rear Turn Signal And Backup Lamp 593
- License Plate Lamp 596

■ FLUID CAPACITIES 597

■ FLUIDS, LUBRICANTS AND GENUINE PARTS 598
- Engine 598
- Chassis 601

ENGINE COMPARTMENT — 2.4L

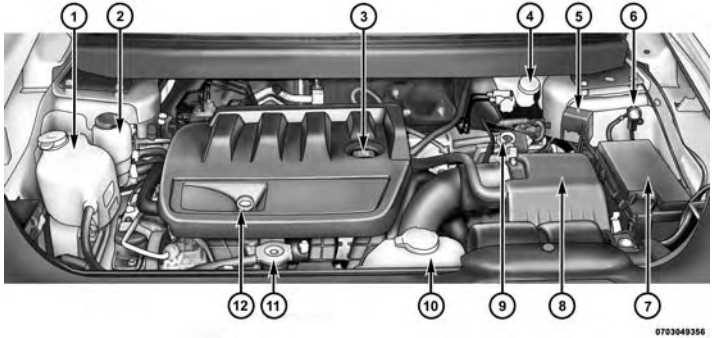

1 — Engine Coolant Reservoir
2 — Power Steering Fluid Reservoir
3 — Engine Oil Fill
4 — Brake Fluid Reservoir
5 — Remote Jump Start (Positive Battery Post)
6 — Remote Jump Start (Negative Battery Post)
7 — Power Distribution Center (Fuses)
8 — Air Cleaner Filter
9 — Automatic Transmission Dipstick (4–Speed Only)
10 — Washer Fluid Reservoir
11 — Coolant Reservoir Cap
12 — Engine Oil Dipstick

ENGINE COMPARTMENT — 3.6L

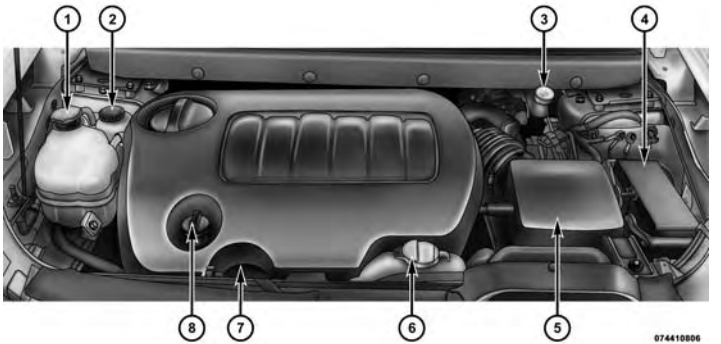

1 — Engine Coolant Reservoir
2 — Power Steering Fluid Reservoir
3 — Brake Fluid Reservoir
4 — Power Distribution Center (Fuses)
5 — Air Cleaner Filter
6 — Washer Fluid Reservoir
7 — Engine Oil Dipstick
8 — Engine Oil Fill

ONBOARD DIAGNOSTIC SYSTEM — OBD II

Your vehicle is equipped with a sophisticated onboard diagnostic system called OBD II. This system monitors the performance of the emissions, engine, and automatic transmission control systems. When these systems are operating properly, your vehicle will provide excellent performance and fuel economy, as well as engine emissions well within current government regulations.

If any of these systems require service, the OBD II system will turn on the "Malfunction Indicator Light" (MIL). It will also store diagnostic codes and other information to assist your service technician in making repairs. Although your vehicle will usually be drivable and not need towing, see your authorized dealer for service as soon as possible.

CAUTION!

- **Prolonged driving with the MIL on could cause further damage to the emission control system. It could also affect fuel economy and driveability. The vehicle must be serviced before any emissions tests can be performed.**
- **If the MIL is flashing while the engine is running, severe catalytic converter damage and power loss will soon occur. Immediate service is required.**

Loose Fuel Filler Cap Message

If the vehicle diagnostic system determines that the fuel filler cap is loose, improperly installed, or damaged, the word "gASCAP" will display in the odometer. If this occurs, tighten the fuel filler cap until a "clicking" sound is heard and press the TRIP ODOMETER button to turn off the message. If the problem persists, the message will appear the next time the vehicle is started.

A loose, improperly installed, or damaged fuel filler cap may also turn on the MIL.

EMISSIONS INSPECTION AND MAINTENANCE PROGRAMS

In some localities, it may be a legal requirement to pass an inspection of your vehicle's emissions control system. Failure to pass could prevent vehicle registration.

For states that require an Inspection and Maintenance (I/M), this check verifies the "Malfunction Indicator Light (MIL)" is functioning and is not on when the engine is running, and that the OBD II system is ready for testing.

Normally, the OBD II system will be ready. The OBD II system may **not** be ready if your vehicle was recently serviced, recently had a dead battery or a battery replacement. If the OBD II system should be determined not ready for the I/M test, your vehicle may fail the test.

Your vehicle has a simple ignition actuated test, which you can use prior to going to the test station. To check if your vehicle's OBD II system is ready, you must do the following:

1. Cycle the ignition switch to the ON position, but do not crank or start the engine.

NOTE: If you crank or start the engine, you will have to start this test over.

2. As soon as you cycle the ignition switch to the ON position, you will see the MIL symbol come on as part of a normal bulb check.

3. Approximately 15 seconds later, one of two things will happen:

- The MIL will flash for about 10 seconds and then return to being fully illuminated until you turn OFF

the ignition or start the engine. This means that your vehicle's OBD II system is **not ready** and you should **not** proceed to the I/M station.

- The MIL will not flash at all and will remain fully illuminated until you turn OFF the ignition or start the engine. This means that your vehicle's OBD II system is **ready** and you can proceed to the I/M station.

If your OBD II system is **not ready,** you should see your authorized dealer or repair facility. If your vehicle was recently serviced or had a battery failure or replacement, you may need to do nothing more than drive your vehicle as you normally would in order for your OBD II system to update. A recheck with the above test routine may then indicate that the system is **now ready**.

Regardless of whether your vehicle's OBD II system is ready or not, if the MIL is illuminated during normal vehicle operation you should have your vehicle serviced before going to the I/M station. The I/M station can fail your vehicle because the MIL is on with the engine running.

REPLACEMENT PARTS

Use of genuine MOPAR® parts for normal/scheduled maintenance and repairs is highly recommended to ensure the designed performance. Damage or failures caused by the use of non-MOPAR® parts for maintenance and repairs will not be covered by the New Vehicle Limited Warranty.

DEALER SERVICE

Your authorized dealer has the qualified service personnel, special tools, and equipment to perform all service operations in an expert manner. Service Manuals are available which include detailed service information for your vehicle. Refer to these Service Manuals before attempting any procedure yourself.

NOTE: Intentional tampering with emissions control systems may void your warranty and could result in civil penalties being assessed against you.

WARNING!

You can be badly injured working on or around a motor vehicle. Only do service work for which you have the knowledge and the proper equipment. If you have any doubt about your ability to perform a service job, take your vehicle to a competent mechanic.

MAINTENANCE PROCEDURES

The pages that follow contain the **required** maintenance services determined by the engineers who designed your vehicle.

Besides those maintenance items specified in the fixed "Maintenance Schedule", there are other components which may require servicing or replacement in the future.

CAUTION!

- **Failure to properly maintain your vehicle or perform repairs and service when necessary could result in more costly repairs, damage to other components or negatively impact vehicle performance. Immediately have potential malfunctions examined by an authorized dealer or qualified repair center.**

(Continued)

CAUTION! *(Continued)*

- **Your vehicle has been built with improved fluids that protect the performance and durability of your vehicle and also allow extended maintenance intervals. Do not use chemical flushes in these components as the chemicals can damage your engine, transmission, power steering or air conditioning. Such damage is not covered by the New Vehicle Limited Warranty. If a flush is needed because of component malfunction, use only the specified fluid for the flushing procedure.**

Engine Oil

Checking Oil Level

To assure proper engine lubrication, the engine oil must be maintained at the correct level. Check the oil level at regular intervals, such as every fuel stop. The best time to check the engine oil level is about five minutes after a fully warmed engine is shut off. Checking engine oil level when the engine is cold will give you an incorrect reading.

Checking the oil while the vehicle is on level ground and only when the engine is hot, will improve the accuracy of the oil level readings. Maintain the oil level between the range markings on the dipstick. Either the range markings consist of a crosshatch zone marked SAFE or a crosshatch zone marked with MIN at the low end of the range and MAX at the high end of the range. Adding 1.0 qt (1.0 l) of oil when the reading is at the low end of the range marking will raise the oil level to the high end of the range marking.

CAUTION!

Do not overfill the engine. Overfilling the engine will cause oil aeration, which can lead to loss of oil pressure and an increase in oil temperature. This

(Continued)

CAUTION! *(Continued)*

could damage your engine. Also, be sure the oil fill cap is replaced and tightened after adding oil.

Change Engine Oil

The oil change indicator system will remind you that it is time to take your vehicle in for scheduled maintenance. Refer to the "Maintenance Schedule" for further information.

NOTE: Under no circumstances should oil change intervals exceed 10,000 miles (16,000 km) or twelve months, whichever occurs first.

Engine Oil Selection

For best performance and maximum protection under all types of operating conditions, the manufacturer only recommends engine oils that are API Certified and meet the requirements of Chrysler Material Standard MS-6395.

American Petroleum Institute (API) Engine Oil Identification Symbol

This symbol means that the oil has been certified by the American Petroleum Institute (API). The manufacturer only recommends API Certified engine oils.

CAUTION!

Do not use chemical flushes in your engine oil as the chemicals can damage your engine. Such damage is not covered by the New Vehicle Limited Warranty.

Engine Oil Viscosity — 2.4L Engine

MOPAR® SAE 5W-20 engine oil or equivalent Pennzoil® or Shell Helix® is recommended for all operating temperatures. This engine oil improves low temperature starting and vehicle fuel economy.

The engine oil filler cap also shows the recommended engine oil viscosity for your engine. For information on the engine oil filler cap location, refer to "Engine Compartment" in "Maintaining Your Vehicle" for further information.

Lubricants that do not have both, the engine oil certification mark and the correct SAE viscosity grade number should not be used.

Engine Oil Viscosity — 3.6L Engine

MOPAR® SAE 5W-20 engine oil approved to Chrysler Material Standard MS-6395 such as Pennzoil®, Shell Helix® or equivalent is recommended for all operating temperatures. This engine oil improves low temperature starting and vehicle fuel economy.

The engine oil filler cap also shows the recommended engine oil viscosity for your engine. For information on engine oil filler cap location, refer to the "Engine Compartment" illustration in this section.

NOTE: MOPAR® SAE 5W-30 engine oil approved to Chrysler Material Standard MS-6395 such as Pennzoil®, Shell Helix® or equivalent may be used when SAE 5W-20 engine oil meeting MS-6395 is not available.

Synthetic Engine Oils

You may use synthetic engine oils provided the recommended oil quality requirements are met, and the recommended maintenance intervals for oil and filter changes are followed.

Materials Added To Engine Oil

The manufacturer strongly recommends against the addition of any additives (other than leak detection dyes) to the engine oil. Engine oil is an engineered product and its performance may be impaired by supplemental additives.

Disposing Of Used Engine Oil And Oil Filters

Care should be taken in disposing of used engine oil and oil filters from your vehicle. Used oil and oil filters, indiscriminately discarded, can present a problem to the environment. Contact your authorized dealer, service station or governmental agency for advice on how and where used oil and oil filters can be safely discarded in your area.

Engine Oil Filter

The engine oil filter should be replaced with a new filter at every engine oil change.

Engine Oil Filter Selection

This manufacturer's engines have a full-flow type oil filter. Use a filter of this type for replacement. The quality of replacement filters varies considerably. Only high quality filters should be used to assure most efficient service. MOPAR® engine oil filters are a high quality oil filter and are recommended.

Engine Air Cleaner Filter

Refer to the "Maintenance Schedule" for the proper maintenance intervals.

WARNING!

The air induction system (air cleaner, hoses, etc.) can provide a measure of protection in the case of engine backfire. Do not remove the air induction system (air cleaner, hoses, etc.) unless such removal is necessary

(Continued)

WARNING! *(Continued)*

for repair or maintenance. Make sure that no one is near the engine compartment before starting the vehicle with the air induction system (air cleaner, hoses, etc.) removed. Failure to do so can result in serious personal injury.

Engine Air Cleaner Filter Selection

The quality of replacement engine air cleaner filters varies considerably. Only high quality filters should be used to assure most efficient service. MOPAR® engine air cleaner filters are a high quality filter and are recommended.

Maintenance-Free Battery

Your vehicle is equipped with a maintenance-free battery. You will never have to add water, nor is periodic maintenance required.

NOTE: The battery is stored in a compartment that is located behind the left front fender and is accessible through the wheel well. The wheel and tire assemble do not need to be removed to access the compartment. Remote battery terminals are located in the engine compartment for jump-starting. Refer to "Jump-Starting Procedures" in "What To Do In Emergencies" for further information.

To access the battery, turn the steering wheel fully to the right and remove the access panel from the inner fender shield.

WARNING!

- **Battery fluid is a corrosive acid solution and can burn or even blind you. Do not allow battery fluid to contact your eyes, skin, or clothing. Do not lean over a battery when attaching clamps. If acid splashes in eyes or on skin, flush the area immediately with large amounts of water.**
- **Battery gas is flammable and explosive. Keep flame or sparks away from the battery. Do not use a booster battery or any other booster source with an output greater than 12 Volts. Do not allow cable clamps to touch each other.**
- **Battery posts, terminals, and related accessories contain lead and lead compounds. Wash hands after handling.**

CAUTION!

- **It is essential when replacing the cables on the battery that the positive cable is attached to the positive post and the negative cable is attached to the negative post. Battery posts are marked positive (+) and negative (-) and are identified on the battery case. Cable clamps should be tight on the terminal posts and free of corrosion.**
- **If a "fast charger" is used while the battery is in the vehicle, disconnect both vehicle battery cables before connecting the charger to the battery. Do not use a "fast charger" to provide starting voltage.**

Air Conditioner Maintenance

For best possible performance, your air conditioner should be checked and serviced by an authorized dealer at the start of each warm season. This service should include cleaning of the condenser fins and a performance

test. Drive belt tension should also be checked at this time.

WARNING!

- **Use only refrigerants and compressor lubricants approved by the manufacturer for your air conditioning system. Some unapproved refrigerants are flammable and can explode, injuring you. Other unapproved refrigerants or lubricants can cause the system to fail, requiring costly repairs. Refer to Warranty Information Book, located on the DVD, for further warranty information.**
- **The air conditioning system contains refrigerant under high pressure. To avoid risk of personal injury or damage to the system, adding refrigerant or any repair requiring lines to be disconnected should be done by an experienced technician.**

CAUTION!

Do not use chemical flushes in your air conditioning system as the chemicals can damage your air conditioning components. Such damage is not covered by the New Vehicle Limited Warranty.

Refrigerant Recovery And Recycling

R-134a Air Conditioning Refrigerant is a hydrofluorocarbon (HFC) that is endorsed by the Environmental Protection Agency and is an ozone-saving product. However, the manufacturer recommends that air conditioning service be performed by authorized dealer or other service facilities using recovery and recycling equipment.

NOTE: Use only manufacturer approved A/C system PAG compressor oil and refrigerants.

A/C Air Filter — If Equipped

Refer to the "Maintenance Schedule" for the proper maintenance intervals.

WARNING!

Do not remove the A/C air filter while the blower is operating or personal injury may result.

The A/C air filter is located in the fresh air inlet behind the glove box. Perform the following steps to replace the filter:

1. Open the glove box and remove all contents.
2. Push the retaining tab on each side of the glove box inward while gently pulling the glove box door outward until both tabs clear the door opening in the instrument panel.

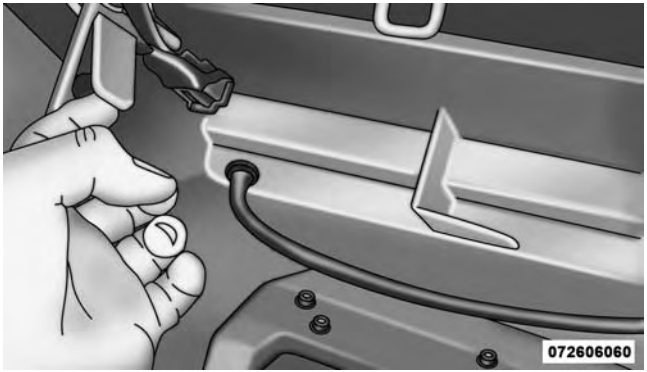

Glove Box Removal

3. Pivot the glove box downward.
4. Disengage the two retaining tabs that secure the filter cover to the HVAC housing and remove the cover.

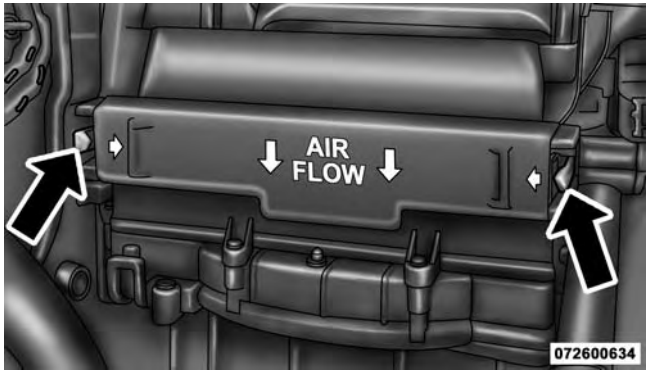

A/C Air Filter Replacement

5. Remove the A/C air filter by pulling it straight out of the housing.
6. Install the A/C air filter with the arrow on the filter pointing toward the floor. When installing the filter cover, make sure the retaining tabs fully engage the cover.

CAUTION!

The A/C air filter is identified with an arrow to indicate airflow direction through the filter. Failure to install the filter properly will result in the need to replace it more often.

7. Reinstall the glove box door. Make sure that the hinges are seated fully as you raise the door. Otherwise, the door latch will not align properly.

Body Lubrication

Locks and all body pivot points, including such items as seat tracks, door hinge pivot points and rollers, liftgate, tailgate, decklid, sliding doors and hood hinges, should be lubricated periodically with a lithium based grease, such as MOPAR® Spray White Lube to assure quiet, easy

operation and to protect against rust and wear. Prior to the application of any lubricant, the parts concerned should be wiped clean to remove dust and grit; after lubricating excess oil and grease should be removed. Particular attention should also be given to hood latching components to ensure proper function. When performing other underhood services, the hood latch, release mechanism and safety catch should be cleaned and lubricated.

The external lock cylinders should be lubricated twice a year, preferably in the Fall and Spring. Apply a small amount of a high quality lubricant, such as MOPAR® Lock Cylinder Lubricant directly into the lock cylinder.

Windshield Wiper Blades

Clean the rubber edges of the wiper blades and the windshield periodically with a sponge or soft cloth and a mild nonabrasive cleaner. This will remove accumulations of salt or road film.

Operation of the wipers on dry glass for long periods may cause deterioration of the wiper blades. Always use washer fluid when using the wipers to remove salt or dirt from a dry windshield.

Avoid using the wiper blades to remove frost or ice from the windshield. Keep the blade rubber out of contact with petroleum products such as engine oil, gasoline, etc.

NOTE: Life expectancy of wiper blades varies depending on geographical area and frequency of use. Poor performance of blades may be present with chattering, marks, water lines or wet spots. If any of these conditions are present, clean the wiper blades or replace as necessary.

Rear Wiper Blade Removal/Installation

1. Lift the pivot cap on the rear wiper arm upward, this will allow the rear wiper blade to be raised off of the liftgate glass.

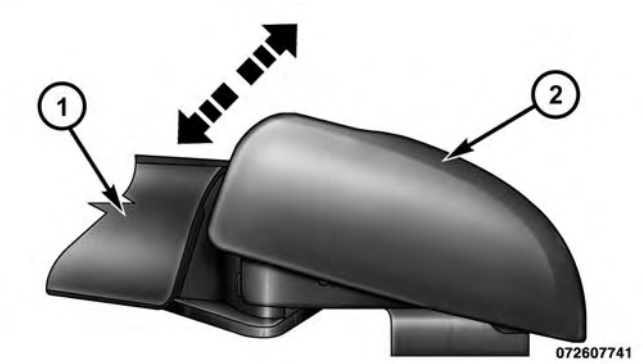

1 — Wiper Arm
2 — Pivot Cap

NOTE: The rear wiper arm cannot be raised fully upward unless the pivot cap is raised first.

2. Lift the rear wiper arm upward to raise the wiper blade off of the liftgate glass.

3. Grab the bottom of the wiper blade and rotate it forward to unsnap the blade pivot pin from the wiper blade holder.

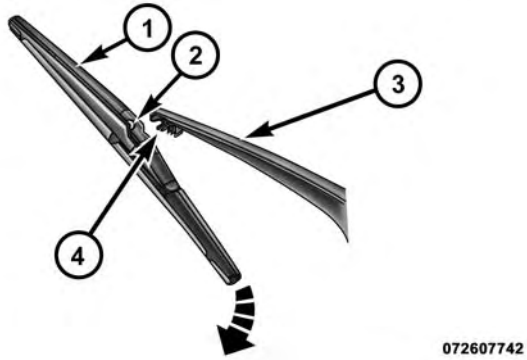

1 — Wiper Blade
2 — Blade Pivot Pin
3 — Wiper Arm
4 — Wiper Blade Holder

4. Install the wiper blade pivot pin into the wiper blade holder at the end of the wiper arm, and firmly press the wiper blade until it snaps into place.
5. Lower the wiper blade and snap the pivot cap into place.

Adding Washer Fluid

The windshield washer and the rear window washer share the same fluid reservoir. The fluid reservoir is located in the engine compartment. Be sure to check the fluid level in the reservoir at regular intervals. Fill the reservoir with windshield washer solvent (not radiator antifreeze) and operate the system for a few seconds to flush out the residual water.

When refilling the washer fluid reservoir, apply some washer fluid to a cloth or towel and wipe the wiper blades clean. This will help blade performance.

To prevent freeze-up of your windshield washer system in cold weather, select a solution or mixture that meets or exceeds the temperature range of your climate. This rating information can be found on most washer fluid containers.

The fluid reservoir will hold nearly 1 gal (4 l) of washer fluid when the message “LoWASH” appears in the instrument cluster.

WARNING!

Commercially available windshield washer solvents are flammable. They could ignite and burn you. Care must be exercised when filling or working around the washer solution.

Exhaust System

The best protection against carbon monoxide entry into the vehicle body is a properly maintained engine exhaust system.

If you notice a change in the sound of the exhaust system; or if the exhaust fumes can be detected inside the vehicle; or when the underside or rear of the vehicle is damaged; have an authorized technician inspect the complete exhaust system and adjacent body areas for broken, damaged, deteriorated, or mispositioned parts. Open seams or loose connections could permit exhaust fumes to seep into the passenger compartment. In addition, have the exhaust system inspected each time the vehicle is raised for lubrication or oil change. Replace as required.

WARNING!

- **Exhaust gases can injure or kill. They contain carbon monoxide (CO), which is colorless and odorless. Breathing it can make you unconscious and can eventually poison you. To avoid breathing CO, refer to "Safety Tips/Exhaust Gas" in "Things To Know Before Starting Your Vehicle" for further information.**
- **A hot exhaust system can start a fire if you park over materials that can burn. Such materials might be grass or leaves coming into contact with your exhaust system. Do not park or operate your vehicle in areas where your exhaust system can contact anything that can burn.**

CAUTION!

- **The catalytic converter requires the use of unleaded fuel only. Leaded gasoline will destroy the effectiveness of the catalyst as an emissions control device and may seriously reduce engine performance and cause serious damage to the engine.**
- **Damage to the catalytic converter can result if your vehicle is not kept in proper operating condition. In the event of engine malfunction, particularly involving engine misfire or other apparent loss of performance, have your vehicle serviced promptly. Continued operation of your vehicle with a severe malfunction could cause the converter to overheat, resulting in possible damage to the converter and vehicle.**

Under normal operating conditions, the catalytic converter will not require maintenance. However, it is important to keep the engine properly tuned to assure proper catalyst operation and prevent possible catalyst damage.

NOTE: Intentional tampering with emissions control systems can result in civil penalties being assessed against you.

In unusual situations involving grossly malfunctioning engine operation, a scorching odor may suggest severe and abnormal catalyst overheating. If this occurs, stop the vehicle, turn off the engine and allow it to cool. Service, including a tune-up to manufacturer's specifications, should be obtained immediately.

To minimize the possibility of catalytic converter damage:

- Do not shut off the engine or interrupt the ignition, when the transmission is in gear and the vehicle is in motion.
- Do not try to start the engine by pushing or towing the vehicle.
- Do not idle the engine with any spark plug wires disconnected or removed, such as when diagnostic testing, or for prolonged periods during very rough idle or malfunctioning operating conditions.

Cooling System

WARNING!

- **When working near the radiator cooling fan, disconnect the fan motor lead or turn the ignition switch to the LOCK position. The fan is temperature controlled and can start at any time the ignition switch is in the ON position.**
- **You or others can be badly burned by hot engine coolant (antifreeze) or steam from your radiator. If you see or hear steam coming from under the hood, do not open the hood until the radiator has had time to cool. Never try to open a cooling system pressure cap when the radiator is hot.**

Coolant Checks

Check the engine coolant (antifreeze) protection every 12 months (before the onset of freezing weather, where

applicable). If the engine coolant (antifreeze) is dirty or rusty in appearance, the system should be drained, flushed, and refilled with fresh engine coolant (antifreeze). Check the front of the A/C condenser for any accumulation of bugs, leaves, etc. If dirty, clean by gently spraying water from a garden hose vertically down the face of the condenser.

Check the coolant recovery bottle tubing for brittle rubber, cracking, tears, cuts, and tightness of the connection at the bottle and radiator. Inspect the entire system for leaks.

Cooling System — Drain, Flush And Refill

NOTE: Some vehicles require special tools to add coolant properly. Failure to fill these systems properly could lead to severe internal engine damage. If any coolant is needed to be added to the system please contact your local authorized dealer.

If the engine coolant (antifreeze) is dirty or contains visible sediment, have an authorized dealer clean and flush with OAT coolant (antifreeze) (conforming to MS-12106).

Refer to the “Maintenance Schedule” for the proper maintenance intervals.

Selection Of Coolant

Refer to “Fluids, Lubricants, and Genuine Parts” in “Maintaining Your Vehicle” for further information.

CAUTION!

- **Mixing of engine coolant (antifreeze) other than specified Organic Additive Technology (OAT) engine coolant (antifreeze), may result in engine damage and may decrease corrosion protection. Organic Additive Technology (OAT) engine coolant is different and should not be mixed with Hybrid Organic Additive Technology (HOAT) engine coolant (antifreeze) or any "globally compatible" coolant (antifreeze). If a non-OAT engine coolant (antifreeze) is introduced into the cooling system in an emergency, the cooling system will need to be drained, flushed, and refilled with fresh OAT coolant (conforming to MS-12106), by an authorized dealer as soon as possible.**

(Continued)

CAUTION! ***(Continued)***

- **Do not use water alone or alcohol-based engine coolant (antifreeze) products. Do not use additional rust inhibitors or antirust products, as they may not be compatible with the radiator engine coolant and may plug the radiator.**
- **This vehicle has not been designed for use with propylene glycol-based engine coolant (antifreeze). Use of propylene glycol-based engine coolant (antifreeze) is not recommended.**

Adding Coolant

Your vehicle has been built with an improved engine coolant (OAT coolant conforming to MS-12106) that allows extended maintenance intervals. This engine coolant (antifreeze) can be used up to ten years or 150,000 miles (240,000 km) before replacement. To prevent reducing this extended maintenance period, it is important that

you use the same engine coolant (OAT coolant conforming to MS-12106) throughout the life of your vehicle.

Please review these recommendations for using Organic Additive Technology (OAT) engine coolant (antifreeze) that meets the requirements of Chrysler Material Standard MS-12106. When adding engine coolant (antifreeze):

- We recommend using MOPAR® Antifreeze/Coolant 10 Year/150,000 Mile Formula OAT (Organic Additive Technology) that meets the requirements of Chrysler Material Standard MS-12106.
- Mix a minimum solution of 50% OAT engine coolant that meets the requirements of Chrysler Material Standard MS-12106 and distilled water. Use higher concentrations (not to exceed 70%) if temperatures below –34° F (–37° C) are anticipated.
- Use only high purity water such as distilled or deionized water when mixing the water/engine coolant (antifreeze) solution. The use of lower quality water will reduce the amount of corrosion protection in the engine cooling system.

Please note that it is the owner's responsibility to maintain the proper level of protection against freezing according to the temperatures occurring in the area where the vehicle is operated.

NOTE:

- Some vehicles require special tools to add coolant properly. Failure to fill these systems properly could lead to severe internal engine damage. If any coolant is needed to be added to the system please contact your local authorized dealer.
- Mixing engine coolant (antifreeze) types is not recommended and can result in cooling system damage. If HOAT and OAT coolant are mixed in an emergency,

have a authorized dealer drain, flush, and refill with OAT coolant (conforming to MS-12106) as soon as possible.

Cooling System Pressure Cap

The cap must be fully tightened to prevent loss of engine coolant (antifreeze), and to ensure that engine coolant (antifreeze) will return to the radiator from the coolant recovery bottle.

The cap should be inspected and cleaned if there is any accumulation of foreign material on the sealing surfaces.

WARNING!

- **The warning words "DO NOT OPEN HOT" on the cooling system pressure cap are a safety precaution. Never add engine coolant (antifreeze) when the engine is overheated. Do not loosen or remove the cap to cool an overheated engine. Heat causes pressure to build up in the cooling system. To prevent scalding or injury, do not remove the pressure cap while the system is hot or under pressure.**
- **Do not use a pressure cap other than the one specified for your vehicle. Personal injury or engine damage may result.**

Disposal Of Used Engine Coolant

Used ethylene glycol-based engine coolant (antifreeze) is a regulated substance requiring proper disposal. Check with your local authorities to determine the disposal

rules for your community. To prevent ingestion by animals or children, do not store ethylene glycol-based engine coolant in open containers or allow it to remain in puddles on the ground. If ingested by a child or pet, seek emergency assistance immediately. Clean up any ground spills immediately.

Coolant Level

2.4L Engine — The coolant bottle provides a quick visual method for determining that the coolant level is adequate. With the engine idling and warm to normal operating temperature, the level of the coolant in the bottle should be between the "ADD" and "FULL" lines, shown on the bottle.

3.6L Engine — The level of the coolant in the pressurized coolant bottle should be between the "COLD" and "FULL" range on the bottle when the engine is cold.

The radiator normally remains completely full, so there is no need to remove the radiator cap unless checking for coolant freeze point or replacing engine coolant (antifreeze). Advise your service attendant of this. As long as the engine operating temperature is satisfactory, the coolant bottle need only be checked once a month. When additional engine coolant (antifreeze) is needed to maintain the proper level, it should be added to the coolant bottle. Do not overfill.

Points To Remember

NOTE: When the vehicle is stopped after a few miles/kilometers of operation, you may observe vapor coming from the front of the engine compartment. This is normally a result of moisture from rain, snow, or high humidity accumulating on the radiator and being vaporized when the thermostat opens, allowing hot engine coolant (antifreeze) to enter the radiator.

If an examination of your engine compartment shows no evidence of radiator or hose leaks, the vehicle may be safely driven. The vapor will soon dissipate.

- Do not overfill the coolant expansion bottle.
- Check the coolant freeze point in the radiator and in the coolant expansion bottle. If engine coolant (antifreeze) needs to be added, the contents of the coolant expansion bottle must also be protected against freezing.
- If frequent engine coolant (antifreeze) additions are required, the cooling system should be pressure tested for leaks.
- Maintain engine coolant (antifreeze) concentration at a minimum of 50% OAT coolant (conforming to MS-12106) and distilled water for proper corrosion protection of your engine which contains aluminum components.
- Make sure that the coolant expansion bottle overflow hoses are not kinked or obstructed.
- Keep the front of the radiator clean. If your vehicle is equipped with air conditioning, keep the front of the condenser clean.
- Do not change the thermostat for Summer or Winter operation. If replacement is ever necessary, install ONLY the correct type thermostat. Other designs may result in unsatisfactory engine coolant (antifreeze) performance, poor gas mileage, and increased emissions.

Brake System

In order to assure brake system performance, all brake system components should be inspected periodically. Refer to the “Maintenance Schedule” for the proper maintenance intervals.

WARNING!

Riding the brakes can lead to brake failure and possibly a collision. Driving with your foot resting or riding on the brake pedal can result in abnormally high brake temperatures, excessive lining wear, and possible brake damage. You would not have your full braking capacity in an emergency.

Master Cylinder — Brake Fluid Level Check

Check the fluid level in the master cylinder immediately if the "Brake Warning Light" indicates system failure.

Check the fluid level in the master cylinder when performing underhood services.

Clean the top of the master cylinder area before removing the cap. If necessary, add fluid to bring the fluid level up to the requirements described on the brake fluid reservoir.

Overfilling of fluid is not recommended because it may cause leaking in the system.

Fluid level can be expected to fall as the brake pads wear. Brake fluid level should be checked when pads are replaced. However, low fluid level may be caused by a leak and a checkup may be needed.

Use only manufacturer's recommended brake fluid. Refer to "Fluids, Lubricants, and Genuine Parts" in "Maintaining Your Vehicle" for further information.

WARNING!

- **Use only manufacturer's recommended brake fluid. Refer to "Fluids, Lubricants, and Genuine Parts" in "Maintaining Your Vehicle" for further information. Using the wrong type of brake fluid can severely damage your brake system and/or impair its performance. The proper type of brake fluid for your vehicle is also identified on the original factory installed hydraulic master cylinder reservoir.**

(Continued)

WARNING! ***(Continued)***

- **To avoid contamination from foreign matter or moisture, use only new brake fluid or fluid that has been in a tightly closed container. Keep the master cylinder reservoir cap secured at all times. Brake fluid in a open container absorbs moisture from the air resulting in a lower boiling point. This may cause it to boil unexpectedly during hard or prolonged braking, resulting in sudden brake failure. This could result in a collision.**
- **Overfilling the brake fluid reservoir can result in spilling brake fluid on hot engine parts, causing the brake fluid to catch fire. Brake fluid can also damage painted and vinyl surfaces, care should be taken to avoid its contact with these surfaces.**

(Continued)

WARNING! *(Continued)*

- **Do not allow petroleum based fluid to contaminate the brake fluid. Brake seal components could be damaged, causing partial or complete brake failure. This could result in a collision.**

Automatic Transmission

Selection Of Lubricant

It is important to use the proper transmission fluid to ensure optimum transmission performance and life. Use only the manufacturer's specified transmission fluid. Refer to "Fluids, Lubricants, and Genuine Parts" in this section for fluid specifications. It is important to maintain the transmission fluid at the correct level using the recommended fluid. No chemical flushes should be used in any transmission; only the approved lubricant should be used.

CAUTION!

Using a transmission fluid other than the manufacturer's recommended fluid may cause deterioration in transmission shift quality and/or torque converter shudder. Refer to "Fluids, Lubricants, and Genuine Parts" in this section for fluid specifications.

Special Additives

The manufacturer strongly recommends against using any special additives in the transmission.

Automatic Transmission Fluid (ATF) is an engineered product and its performance may be impaired by supplemental additives. Therefore, do not add any fluid additives to the transmission. The only exception to this policy is the use of special dyes for diagnosing fluid leaks. Avoid using transmission sealers as they may adversely affect seals.

CAUTION!

Do not use chemical flushes in your transmission as the chemicals can damage your transmission components. Such damage is not covered by the New Vehicle Limited Warranty.

Fluid Level Check — Four-Speed Automatic Transmission

Use the following procedure to check the transmission fluid level properly:

1. Park the vehicle on level ground.
2. Run the engine at normal idle speed for at least 60 seconds, and leave the engine running for the rest of this procedure.
3. Fully apply the parking brake, and press the brake pedal.
4. Place the shift lever momentarily into each gear position (allowing time for the transmission to fully engage in each position), ending with the transmission in PARK.
5. Wipe the area around the dipstick clean to prevent dirt from entering the transmission.
6. Remove the dipstick and determine if the fluid is hot or cold. You can also read the transmission fluid temperature using the Vehicle Information display in the Electronic Vehicle Information Center (EVIC) in the instrument cluster. Refer to "Electronic Vehicle Information Center (EVIC)" in "Understanding Your Instrument Panel" for further information. Hot fluid is approximately 180°F (82°C), which is the normal operating temperature after the vehicle is driven at least 15 miles (24 km). Hot fluid cannot be held comfortably between the fingertips. Cold fluid is at a temperature of approximately 80°F (27°C).

7. Wipe the dipstick clean and reinsert it until seated. Then, remove the dipstick and note the fluid level on both sides. The fluid level reading is only valid if there is a solid coating of oil on both sides of the dipstick. Note that the holes in the dipstick will be full of fluid if the actual level is at or above the hole.
   - If the fluid is hot, the fluid level should be in the crosshatched area marked "HOT" (between the upper two holes in the dipstick).
   - If the fluid is cold, the fluid level should be between the lower two holes in the area marked "COLD."

If the fluid level is low, add fluid through the dipstick tube to bring it to the proper level. Do not overfill. After adding any quantity of oil through the dipstick tube, wait at least two minutes for the oil to fully drain into the transmission before rechecking the fluid level.

NOTE: If it is necessary to check the transmission below the operating temperature, the fluid level should be between the two COLD (lower) holes on the dipstick with the fluid at approximately 80°F (27°C). If the fluid level is correctly established at 80°F (27°C), it should be between the HOT (upper) reference holes when the transmission reaches 180°F (82°C). Remember it is best to check the level at the normal operating temperature.

8. Check for leaks. Release the parking brake.

CAUTION!

- **Using a transmission fluid other than the manufacturer's recommended fluid may cause deterioration in transmission shift quality and/or torque converter shudder, and will require more frequent fluid and filter changes. Refer to "Fluids, Lubricants, and Genuine Parts" in this section for fluid specifications.**
- **Dirt and water in the transmission can cause serious damage. To prevent dirt and water from entering the transmission after checking or replenishing fluid, make sure that the dipstick cap is re-seated properly.**

Fluid Level Check — Six-Speed Automatic Transmission

The fluid level is preset at the factory and does not require adjustment under normal operating conditions. Routine fluid level checks are not required, therefore the transmission filler tube is capped and no dipstick is provided. Your authorized dealer can check your transmission fluid level using a special service dipstick. If you notice fluid leakage or transmission malfunction, visit your authorized dealer immediately to have the transmission fluid level checked. Operating the vehicle with an improper fluid level can cause severe transmission damage.

CAUTION!

If a transmission fluid leak occurs, visit your authorized dealer immediately. Severe transmission damage may occur. Your authorized dealer has the proper tools to adjust the fluid level accurately.

Fluid And Filter Changes

Refer to the "Maintenance Schedule" for the proper maintenance intervals.

In addition, change the fluid and filter if the fluid becomes contaminated (with water, etc.), or if the transmission is disassembled for any reason.

Rear Drive Assembly (RDA) – AWD Models Only

Lubricant Selection

Use only the manufacturer's recommended fluid. Refer to "Fluids, Lubricants, and Genuine Parts" in "Maintaining Your Vehicle" for further information.

Fluid Level Check

Visually inspect the unit at each oil change for leakage. If leakage is detected, check the fluid level by removing the fill plug. The fluid level should be maintained between the bottom of the fill hole to 1/8 in (4 mm) below the fill hole.

Add fluid, if necessary, to maintain the proper level.

Frequency Of Fluid Change

Refer to the "Maintenance Schedule" for the proper maintenance intervals.

Power Transfer Unit (PTU) – AWD Models Only

Lubricant Selection

Use only the manufacturer's recommended fluid. Refer to "Fluids, Lubricants, and Genuine Parts" in "Maintaining Your Vehicle" for further information.

Fluid Level Check

Visually inspect the unit at each oil change for leakage. If leakage is detected, Check the fluid level by removing the fill plug. The fluid level should be maintained between the bottom of the fill hole to 1/8 in (4 mm) below the fill hole.

Add fluid, if necessary, to maintain the proper level.

Frequency Of Fluid Change

Refer to the "Maintenance Schedule" for the proper maintenance intervals.

Appearance Care And Protection From Corrosion

Protection Of Body And Paint From Corrosion

Vehicle body care requirements vary according to geographic locations and usage. Chemicals that make roads passable in snow and ice and those that are sprayed on trees and road surfaces during other seasons are highly corrosive to the metal in your vehicle. Outside parking, which exposes your vehicle to airborne contaminants, road surfaces on which the vehicle is operated, extreme hot or cold weather and other extreme conditions will have an adverse effect on paint, metal trim, and underbody protection.

The following maintenance recommendations will enable you to obtain maximum benefit from the corrosion resistance built into your vehicle.

What Causes Corrosion?

Corrosion is the result of deterioration or removal of paint and protective coatings from your vehicle.

The most common causes are:

- Road salt, dirt and moisture accumulation.
- Stone and gravel impact.
- Insects, tree sap and tar.
- Salt in the air near seacoast localities.
- Atmospheric fallout/industrial pollutants.

Washing

- Wash your vehicle regularly. Always wash your vehicle in the shade using MOPAR® Car Wash, or a mild car wash soap, and rinse the panels completely with clear water.
- If insects, tar, or other similar deposits have accumulated on your vehicle, use MOPAR® Super Kleen Bug and Tar Remover to remove.
- Use a high quality cleaner wax, such as MOPAR® Cleaner Wax to remove road film, stains and to protect your paint finish. Take care never to scratch the paint.
- Avoid using abrasive compounds and power buffing that may diminish the gloss or thin out the paint finish.

CAUTION!

- **Do not use abrasive or strong cleaning materials such as steel wool or scouring powder that will scratch metal and painted surfaces.**
- **Use of power washers exceeding 1,200 psi (8 274 kPa) can result in damage or removal of paint and decals.**

Special Care

- If you drive on salted or dusty roads or if you drive near the ocean, hose off the undercarriage at least once a month.
- It is important that the drain holes in the lower edges of the doors, rocker panels, and trunk be kept clear and open.

- If you detect any stone chips or scratches in the paint, touch them up immediately. The cost of such repairs is considered the responsibility of the owner.
- If your vehicle is damaged due to a collision or similar cause that destroys the paint and protective coating, have your vehicle repaired as soon as possible. The cost of such repairs is considered the responsibility of the owner.
- If you carry special cargo such as chemicals, fertilizers, de-icer salt, etc., be sure that such materials are well packaged and sealed.
- If a lot of driving is done on gravel roads, consider mud or stone shields behind each wheel.
- Use MOPAR® Touch Up Paint on scratches as soon as possible. Your authorized dealer has touch up paint to match the color of your vehicle.

Wheel And Wheel Trim Care

- All wheels and wheel trim, especially aluminum and chrome plated wheels, should be cleaned regularly with a mild soap and water to prevent corrosion.
- To remove heavy soil and/or excessive brake dust, use MOPAR® Wheel Cleaner.

NOTE: If your vehicle is equipped with Dark Vapor or Black Satin Chrome wheels DO NOT USE wheel cleaners, abrasives or polishing compounds. They will permanently damage this finish and such damage is not covered by the New Vehicle Limited Warranty. USE ONLY MILD SOAP AND WATER WITH A SOFT CLOTH. Used on a regular basis this is all that is required to maintain this finish.

CAUTION!

Do not use scouring pads, steel wool, a bristle brush, or metal polishes. Do not use oven cleaner. These products may damage the wheel's protective finish. Avoid automatic car washes that use acidic solutions or harsh brushes that may damage the wheel's protective finish. Only MOPAR® Wheel Cleaner or equivalent is recommended.

Stain Repel Fabric Cleaning Procedure — If Equipped

Stain Repel seats may be cleaned in the following manner:

- Remove as much of the stain as possible by blotting with a clean, dry towel.
- Blot any remaining stain with a clean, damp towel.
- For tough stains, apply MOPAR® Total Clean, or a mild soap solution to a clean, damp cloth and remove stain. Use a fresh, damp towel to remove soap residue.
- For grease stains, apply MOPAR® Multi-Purpose Cleaner to a clean, damp cloth and remove stain. Use a fresh, damp towel to remove soap residue.
- Do not use any harsh solvents or any other form of protectants on Stain Repel products.

Interior Care

Instrument Panel Cover

The instrument panel cover has a low glare surface, which minimizes reflections in the windshield. Do not use protectants or other products, which may cause undesirable reflections. Use soap and warm water to restore the low glare surface.

Cleaning Interior Trim

Interior Trim should be cleaned starting with a damp cloth, a damp cloth with MOPAR® Total Clean or equivalent, then MOPAR® Spot & Stain Remover or equivalent if absolutely necessary. Do not use harsh cleaners or Armor All®. Use MOPAR® Total Clean or equivalent to clean vinyl upholstery.

Cleaning Leather Upholstery

MOPAR® Total Clean or equivalent is specifically recommended for leather upholstery.

Your leather upholstery can be best preserved by regular cleaning with a damp soft cloth. Small particles of dirt can act as an abrasive and damage the leather upholstery and should be removed promptly with a damp cloth. Stubborn soils can be removed easily with a soft cloth and MOPAR® Total Clean or equivalent. Care should be taken to avoid soaking your leather upholstery with any liquid. Please do not use polishes, oils, cleaning fluids, solvents, detergents, or ammonia-based cleaners to clean your leather upholstery. Application of a leather conditioner is not required to maintain the original condition.

WARNING!

Do not use volatile solvents for cleaning purposes. Many are potentially flammable, and if used in closed areas they may cause respiratory harm.

Cleaning Headlights

Your vehicle is equipped with plastic headlights and fog lights that are lighter and less susceptible to stone breakage than glass headlights.

Plastic is not as scratch resistant as glass and therefore different lens cleaning procedures must be followed.

To minimize the possibility of scratching the lenses and reducing light output, avoid wiping with a dry cloth. To remove road dirt, wash with a mild soap solution followed by rinsing.

Do not use abrasive cleaning components, solvents, steel wool or other aggressive material to clean the lenses.

Glass Surfaces

All glass surfaces should be cleaned on a regular basis with MOPAR® Glass Cleaner, or any commercial household-type glass cleaner. Never use an abrasive type cleaner. Use caution when cleaning the inside rear window equipped with electric defrosters or the right rear quarter window equipped with the radio antenna. Do not use scrapers or other sharp instrument that may scratch the elements.

When cleaning the rear view mirror, spray cleaner on the towel or rag that you are using. Do not spray cleaner directly on the mirror.

Cleaning Plastic Instrument Cluster Lenses

The lenses in front of the instruments in this vehicle are molded in clear plastic. When cleaning the lenses, care must be taken to avoid scratching the plastic.

1. Clean with a wet soft rag. A mild soap solution may be used, but do not use high alcohol content or abrasive cleaners. If soap is used, wipe clean with a clean damp rag.
2. Dry with a soft cloth.

Seat Belt Maintenance

Do not bleach, dye, or clean the belts with chemical solvents or abrasive cleaners. This will weaken the fabric. Sun damage can also weaken the fabric.

If the belts need cleaning, use MOPAR® Total Clean, a mild soap solution, or lukewarm water. Do not remove the belts from the vehicle to wash them. Dry with a soft cloth.

Replace the belts if they appear frayed or worn or if the buckles do not work properly.

WARNING!

A frayed or torn belt could rip apart in a collision and leave you with no protection. Inspect the belt system periodically, checking for cuts, frays, or loose parts. Damaged parts must be replaced immediately. Do not disassemble or modify the system. Seat belt assemblies must be replaced after a collision if they have been damaged (i.e., bent retractor, torn webbing, etc.).

Cleaning The Cupholders

Clean with a damp cloth or towel using a mild detergent.

FUSES

WARNING!

- **When replacing a blown fuse, always use an appropriate replacement fuse with the same amp rating as the original fuse. Never replace a fuse with another fuse of higher amp rating. Never replace a blown fuse with metal wires or any other material. Failure to use proper fuses may result in serious personal injury, fire and/or property damage.**
- **Before replacing a fuse, make sure that the ignition is off and that all the other services are switched off and/or disengaged.**

(Continued)

WARNING! *(Continued)*

- **If the replaced fuse blows again, contact an authorized dealer.**
- **If a general protection fuse for safety systems (air bag system, braking system), power unit systems (engine system, gearbox system) or steering system blows, contact an authorized dealer.**

Interior Fuses

The interior fuse panel is located on the passenger side under the instrument panel.

Cavity	Cartridge Fuse	Mini-Fuse	Description
F100	30 Amp Pink	–	110V AC Inverter – If Equipped
F101	–	10 Amp Red	Interior Lights
F102	–	20 Amp Yellow	Cigar Lighter in Instrument Panel/ Left Rear Power Outlet
F103	–	20 Amp Yellow	Power Outlet in Console Bin/Power Outlet in Rear of Console
F105	–	20 Amp Yellow	Heated Seats – If Equipped
F106	–	20 Amp Yellow	Rear Power Outlet

Cavity	Car-tridge Fuse	Mini-Fuse	Description
F107	–	10 Amp Red	Rear Camera – If Equipped
F108	–	15 Amp Blue	Instrument Panel
F109	–	10 Amp Red	Climate Control/ HVAC
F110	–	10 Amp Red	Occupant Restraint Controller
F112	–	10 Amp Red	Spare
F114	–	20 Amp Yellow	Rear HVAC Blower/Motor
F115	–	20 Amp Yellow	Rear Wiper Motor

Cavity	Car-tridge Fuse	Mini-Fuse	Description
F116	30 Amp Pink	–	Rear Defroster (EBL)
F117	–	10 Amp Red	Heated Mirrors
F118	–	10 Amp Red	Occupant Restraint Controller
F119	–	10 Amp Red	Steering Column Control Module
F120	–	10 Amp Red	All Wheel Drive – If Equipped
F121	–	15 Amp Blue	Wireless Ignition Node
F122	–	25 Amp Clear	Driver Door Mod-ule

Cavity	Car-tridge Fuse	Mini-Fuse	Description
F123	–	25 Amp Clear	Passenger Door Module
F124	–	10 Amp Red	Mirrors
F125	–	10 Amp Red	Steering Column Control Module
F126	–	25 Amp Clear	Audio Amplifier
F127	–	20 Amp Yellow	Trailer Tow – If Equipped
F128	–	15 Amp Blue	Radio
F129	–	15 Amp Blue	Video/DVD – If Equipped

Cavity	Car-tridge Fuse	Mini-Fuse	Description
F130	–	15 Amp Blue	Climate Control/ Instrument Panel
F131	–	10 Amp Red	Passenger Assistance/Hands Free System – If Equipped
F132	–	10 Amp Red	Tire Pressure Mod-ule
F133	–	10 Amp Red	Spare

Underhood Fuses (Power Distribution Center)

The power distribution center is located in the engine compartment.

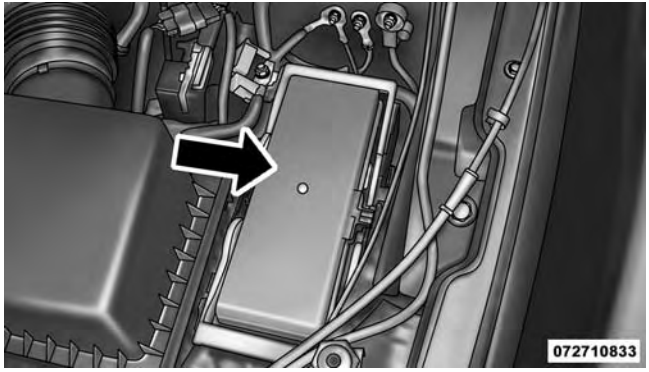

Power Distribution Center

Cavity	Car-tridge Fuse	Mini-Fuse	Description
F101	60 Amp Yellow	–	Interior Power Distribution Center Rail
F102	60 Amp Yellow	–	Interior Power Distribution Center Rail
F103	60 Amp Yellow	–	Interior Power Distribution Center Rail
F105	60 Amp Yellow	–	Interior Power Distribution Center Rail Ignition Run Relay

Cavity	Cartridge Fuse	Mini-Fuse	Description
F106	60 Amp Yellow	–	Interior Power Distribution Center Rail Run/Accessory Relays
F139	40 Amp Green	–	Climate Control System Blower
F140	30 Amp Pink	–	Power Locks
F141	40 Amp Green	–	Anti-Lock Brake System
F142	40 Amp Green	–	Glow Plugs – If Equipped
F143	40 Amp Green	–	Exterior Lights 1

Cavity	Cartridge Fuse	Mini-Fuse	Description
F144	40 Amp Green	–	Exterior Lights 2
F145	30 Amp Pink	–	To Body Computer – Lamp
F146	30 Amp Pink	–	Spare
F147	30 Amp Pink	–	Spare
F148	40 Amp Green	–	Radiator Fan Motor
F149	30 Amp Pink	–	Starter Solenoid
F150	–	25 Amp Clear	Powertrain Control Modules

Cavity	Car-tridge Fuse	Mini-Fuse	Description
F151	30 Amp Pink	–	Headlamp Washer Motor – If Equipped
F152	–	25 Amp Clear	Diesel Fuel Heater – If Equipped
F153	–	20 Amp Yellow	Fuel Pump
F156	–	10 Amp Red	Brake/Electronic Stability Control Module
F157	–	10 Amp Red	Power Transfer Unit Module – If Equipped

Cavity	Car-tridge Fuse	Mini-Fuse	Description
F158	–	10 Amp Red	Active Hood Mod-ule – If Equipped
F159	–	10 Amp Red	Spare
F160	–	20 Amp Yellow	Interior Lights
F161	–	20 Amp Yellow	Horn
F162	40 Amp Red/20 Amp Lt. Blue	–	Cabin Heater #1/ Vacuum Pump – If Equipped
F163	50 Amp Red	–	Cabin Heater #2 – If Equipped

Cavity	Cartridge Fuse	Mini-Fuse	Description
F164	–	25 Amp Clear	Powertrain Auto Shutdown
F165	–	20 Amp Yellow	Powertrain Shutdown
F166	–	20 Amp Yellow	Spare
F167	–	30 Amp Green	Powertrain Shutdown
F168	–	10 Amp Red	Air Conditioner Clutch
F169	40 Amp Green	–	Emissions – Partial Zero Emissions Vehicle Motor

Cavity	Cartridge Fuse	Mini-Fuse	Description
F170	–	15 Amp Blue	Emissions – Partial Zero Emissions Vehicle Actuators
F172	–	20 Amp Yellow	Spare
F173	–	25 Amp Clear	Anti Lock Brake Valves
F174	–	20 Amp Yellow	Siren – If Equipped
F175	–	30 Amp Green	Spare
F176	–	10 Amp Red	Powertrain Control Modules

Cavity	Car-tridge Fuse	Mini-Fuse	Description
F177	–	20 Amp Yellow	All Wheel Drive Module – If Equipped
F178	–	25 Amp Clear	Sunroof – If Equipped
F179	–	10 Amp Red	Battery Sensor
F181	100 Amp Blue	–	Electrohydraulic Steering (EHPS) – If Equipped
F182	50 Amp Red	–	Cabin Heater #3 – If Equipped
F184	30 Amp Pink	–	Front Wiper Motor

REPLACEMENT BULBS

Interior Bulbs

	Bulb Number
Courtesy/Reading Lamps (Incandescent)	578
Courtesy/Reading Lamps (Optional LED)	LED (Serviced at Authorized Dealer)
Glove Box Lamp	194
Cargo Lamp	579
Optional Door Map Pocket/Cupholder	LED (Serviced at Authorized Dealer)
For lighted switches, see your authorized dealer for replacement instructions.	

Exterior Bulbs

	Bulb Number
Low Beam Headlamp	9006
High Beam Headlamp	9005
Front Park/Turn Signal	3757AK
Side Marker Lamp	168
Front Fog Lamp	PSX24W or 2504
Center High Mounted Stop Lamp (CHMSL)	LED (Serviced at Authorized Dealer)
License Lamp	168

Exterior Bulbs – Rear (LED Version)

	Bulb Number
Rear Tail/Stop Lamp	LED (Serviced at Authorized Dealer)
Rear Tail (Liftgate) Lamp	LED (Serviced at Authorized Dealer)
Rear Turn Signal Lamp	WY21W or 7440A
Backup Lamp	W21W or 7440

Exterior Bulbs – Rear (Bulb Version)

	Bulb Number
Rear Tail/Stop/Turn Signal Lamp	P27/7W or 3157
Rear Tail (Liftgate) Lamp	P27/7W or 3157
Backup Lamp	P27/7W or 3157

BULB REPLACEMENT

NOTE: Lens fogging can occur under certain atmospheric conditions. This will usually clear as atmospheric conditions change to allow the condensation to change back into a vapor. Turning the lamps on will usually accelerate the clearing process.

Front Low/High Beam Headlamp, Turn Signal/Park Lamp, And Side Marker Lamp

1. Open the hood.

NOTE: It may be necessary to remove the air cleaner filter housing and position the Totally Integrated Power Module (TIPM) aside to replace certain lamps in the left headlamp housing.

2. Rotate the applicable bulb and connector assembly ¼ turn counterclockwise and remove the assembly from the headlamp housing.

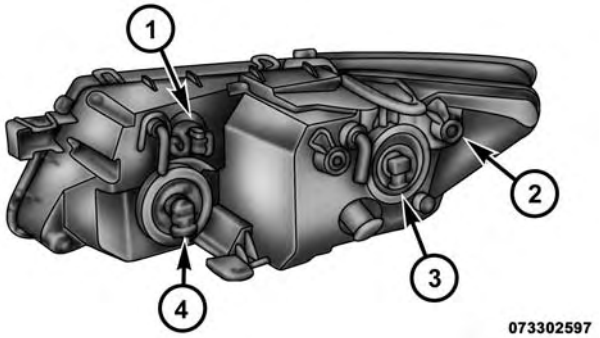

1 — Front Turn Signal/Park Lamp Bulb
2 — Side Marker Lamp Bulb
3 — Low Beam Headlamp Bulb
4 — High Beam Headlamp Bulb

3. Disconnect the bulb from the harness connector and then connect the replacement bulb.

CAUTION!

Do not touch the new bulb with your fingers. Oil contamination will severely shorten bulb life. If the bulb comes in contact with any oily surface, clean the bulb with rubbing alcohol.

4. Install the bulb and connector assembly into the headlamp housing and rotate it ¼ turn clockwise to lock it in place.

Front Fog Lamp

NOTE: Turn the steering wheel to the right if replacing the left front fog lamp or to the left if replacing the right front fog lamp to allow for easier access to the front of the wheel well.

1. Remove the fasteners retaining the front lower wheel well access panel and remove the access panel.
2. Remove the electrical connector from the fog lamp housing.

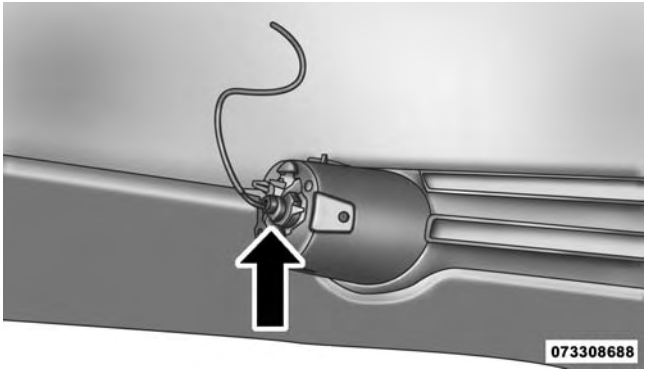

Front Fog Lamp Electrical Connector

3. Squeeze the two tabs on the side of the bulb socket and pull straight out from the fog lamp.

CAUTION!

Do not touch the new bulb with your fingers. Oil contamination will severely shorten bulb life. If the bulb comes in contact with an oily surface, clean the bulb with rubbing alcohol.

4. Install the replacement bulb and connector assembly straight into the fog lamp until it locks into place.
5. Reinstall the front lower wheel well access panel and fasteners.

Rear Turn Signal And Backup Lamp

The tail lamps are a two-piece design. The tail/stop/rear turn signal lamps are located in the rear corner body panels. The tail and backup lamps are located in the liftgate.

Changing The Rear Turn Signal Lamp

1. Open the liftgate.
2. Remove the two fasteners from the inboard side of the tail lamp housing.

Inboard Tail Lamp Housing Fasteners

3. Carefully insert a trim stick (plastic flat-blade tool) between the body panel and the outboard side of the tail lamp housing with one hand and grasp the flange on the inboard side of the tail lamp housing with the other hand. Use the trim stick and hand pressure together to disengage the tail lamp housing from the vehicle.
4. Rotate the applicable bulb's electrical connector ¼ turn counterclockwise and remove it from the tail lamp housing.
5. Remove the bulb from the connector socket and install the replacement bulb.
6. Install the bulb and connector assembly into the tail lamp housing and rotate the connector ¼ turn clockwise to lock it in place.
7. Reinstall the tail lamp housing and fasteners.

Changing The Backup Lamp

1. Open the liftgate.
2. Remove the two fasteners retaining the tail lamp housing to the liftgate from the inboard face of the liftgate.

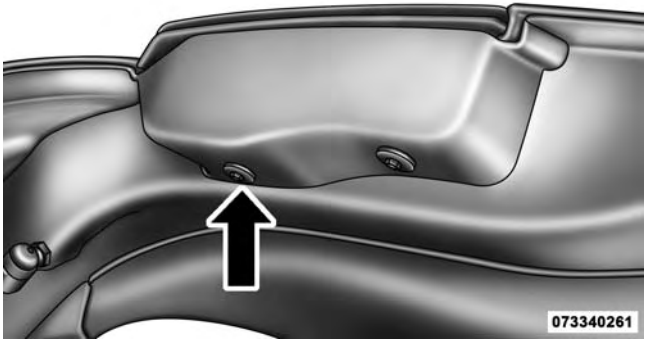

Tail Lamp Housing Retainers

3. Carefully insert a trim stick (plastic flat-blade tool) between the tail lamp housing and the liftgate. Use the trim stick and hand pressure together to disengage the tail lamp housing from the liftgate.

Tail Gate Lamp

4. Rotate the applicable bulb's electrical connector ¼ turn counterclockwise and remove it from the housing.
5. Remove the bulb from the connector socket and install the replacement bulb.
6. Install the bulb and connector assembly into the housing and rotate the connector ¼ turn clockwise to lock it in place.
7. Reinstall the tail lamp housing and fasteners.

License Plate Lamp

1. Push the small locking tab sticking out of the end of the lens toward the side of the vehicle and hold it in that position.

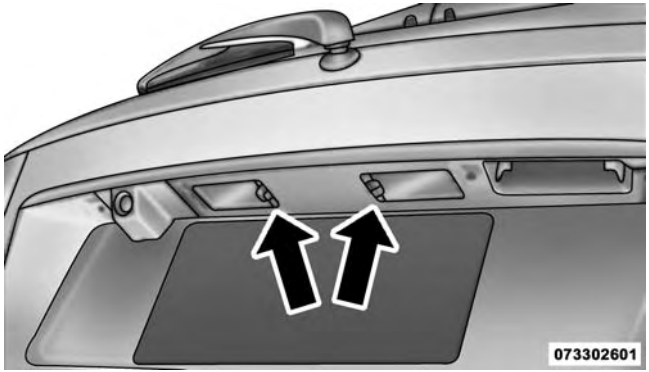

License Lamp

2. Insert a small flat-blade tool between the end of the lens with the locking tab and the surrounding housing and then pivot the tool to separate the lens from the housing.
3. Hold the lens with one hand and rotate the bulb's electrical connector ¼ turn counterclockwise with the other hand and then separate the bulb and connector assembly from the lens.
4. Remove the bulb from the connector socket and install the replacement bulb.
5. Install the bulb and connector assembly into the lens and rotate the connector ¼ turn clockwise to lock it in place.
6. Insert the end of the lens without the locking tab into the housing on the liftgate and then push the opposite end of the lens into the housing, making sure it locks in the housing.

FLUID CAPACITIES

	U.S.	Metric
Fuel (Approximate)		
Front Wheel Drive (FWD) Models	20.5 Gallons	77.6 Liters
All-Wheel Drive Models	21 Gallons	79.8 Liters
Engine Oil With Filter		
2.4L Engine (SAE 5W-20, API Certified)	4.5 Quarts	4.26 Liters
3.6L Engine (SAE 5W-20, API Certified)	6 Quarts	5.6 Liters
Cooling System*		
2.4L Engine and Single or Dual-Zone Climate Control System (MOPAR® Antifreeze/Engine Coolant 10 Year/150,000 Mile Formula)	10.7 Quarts	10.1 Liters
2.4L Engine and Three-Zone Climate Control System (MOPAR® Antifreeze/Engine Coolant 10 Year/150,000 Mile Formula)	11.6 Quarts	11.0 Liters

	U.S.	Metric
3.6L Engine and Single or Dual-Zone Climate Control System (MOPAR® Antifreeze/Engine Coolant 10 Year/150,000 Mile Formula)	13.1 Quarts	12.4 Liters
3.6L Engine and Three-Zone Climate Control System (MOPAR® Antifreeze/Engine Coolant 10 Year/150,000 Mile Formula)	14.5 Quarts	13.7 Liters
* Includes heater and coolant recovery bottle filled to MAX level.		

FLUIDS, LUBRICANTS AND GENUINE PARTS

Engine

Component	Fluid, Lubricant, or Genuine Part
Engine Coolant	We recommend you use MOPAR® Antifreeze/Coolant 10 Year/150,000 Mile Formula OAT (Organic Additive Technology).
Engine Oil – 2.4L Engine	We recommend you use API Certified SAE 5W-20 Engine Oil, meeting the requirements of Chrysler Material Standard MS-6395 such as MOPAR®, Pennzoil®, and Shell Helix®. Refer to your engine oil filler cap for correct SAE grade.

Component	Fluid, Lubricant, or Genuine Part
Engine Oil – 3.6L Engine	We recommend you use API Certified SAE 5W-20 Engine Oil, meeting the requirements of Chrysler Material Standard MS-6395 such as MOPAR, Pennzoil® and Shell Helix®. Refer to your engine oil filler cap for correct SAE grade.
Engine Oil Filter	We recommend you use MOPAR® Engine Oil Filter.
Spark Plugs – 2.4L Engine	We recommend you use MOPAR® Spark Plugs.
Spark Plugs – 3.6L Engine	We recommend you use MOPAR® Spark Plugs.
Fuel Selection	87 Octane

CAUTION!

- **Mixing of engine coolant (antifreeze) other than specified Organic Additive Technology (OAT) engine coolant (antifreeze), may result in engine damage and may decrease corrosion protection. Organic Additive Technology (OAT) engine coolant is different and should not be mixed with**

(Continued)

CAUTION! ***(Continued)***

Hybrid Organic Additive Technology (HOAT) engine coolant (antifreeze) or any "globally compatible" coolant (antifreeze). If a non-OAT engine coolant (antifreeze) is introduced into the cooling system in an emergency, the cooling system will need to be drained, flushed, and refilled with fresh

(Continued)

CAUTION! *(Continued)*

OAT coolant (conforming to MS-12106), by an authorized dealer as soon as possible.

- **Do not use water alone or alcohol-based engine coolant (antifreeze) products. Do not use additional rust inhibitors or antirust products, as they may not be compatible with the radiator engine coolant and may plug the radiator.**
- **This vehicle has not been designed for use with propylene glycol-based engine coolant (antifreeze). Use of propylene glycol-based engine coolant (antifreeze) is not recommended.**

Chassis

Component	Fluid, Lubricant, or Genuine Part
Automatic Transmission	Use only ATF+4® Automatic Transmission Fluid. Failure to use ATF+4® fluid may affect the function or performance of your transmission. We recommend MOPAR® ATF+4® fluid.
Power Transfer Unit (PTU)	We recommend you use MOPAR® Gear Lubricant 75W-90.
Rear Drive Assembly (RDA)	We recommend you use MOPAR® Gear Lubricant 75W-90.
Brake Master Cylinder	We recommend you use MOPAR® DOT 3, SAE J1703. If DOT 3 brake fluid is not available, then DOT 4 is acceptable.
Power Steering Reservoir	We recommend you use MOPAR® Power Steering Fluid + 4, or MOPAR® ATF+4® Automatic Transmission Fluid.

MAINTENANCE SCHEDULES

CONTENTS

■ MAINTENANCE SCHEDULE 604

□ Maintenance Chart. 607

MAINTENANCE SCHEDULE

Your vehicle is equipped with an automatic oil change indicator system. The oil change indicator system will remind you that it is time to take your vehicle in for scheduled maintenance.

Based on engine operation conditions, the oil change indicator message will illuminate. This means that service is required for your vehicle. Operating conditions such as frequent short-trips, trailer tow, extremely hot or cold ambient temperatures, and E85 fuel usage will influence when the "Change Oil" or "Oil Change Required" message is displayed. Severe Operating Conditions can cause the change oil message to illuminate as early as 3,500 miles (5,600 km) since last reset. Have your vehicle serviced as soon as possible, within the next 500 miles (805 km).

On Electronic Vehicle Information Center (EVIC) equipped vehicles, "Oil Change Required" will be displayed in the EVIC and a single chime will sound, indicating that an oil change is necessary.

On Non-EVIC equipped vehicles, "Change Oil" will flash in the instrument cluster odometer and a single chime will sound, indicating that an oil change is necessary.

Your authorized dealer will reset the oil change indicator message after completing the scheduled oil change. If a scheduled oil change is performed by someone other than your authorized dealer, the message can be reset by referring to the steps described under "Electronic Vehicle Information Center (EVIC)" in "Understanding Your Instrument Panel" for further information.

NOTE: Under no circumstances should oil change intervals exceed 10,000 miles (16,000 km) or twelve months, whichever comes first.

Severe Duty All Models

Change Engine Oil at 4000 miles (6,500 km) if the vehicle is operated in a dusty and off road environment. This type of vehicle use is considered Severe Duty.

Once A Month Or Before A Long Trip:

- Check engine oil level.
- Check windshield washer fluid level.
- Check tire pressure and look for unusual wear or damage. Rotate tires at the first sign of irregular wear, even if it occurs before the oil indicator system turns on.
- Check the fluid levels of the coolant reservoir, brake master cylinder, power steering and transmission (4-speed only) and fill as needed.
- Check function of all interior and exterior lights.

Required Maintenance Intervals.

Refer to the Maintenance Schedules on the following page for the required maintenance intervals.

At Every Oil Change Interval As Indicated By Oil Change Indicator System:
• Change oil and filter.
• Rotate the tires. **Rotate at the first sign of irregular wear, even if it occurs before the oil indicator system turns on.**
• Inspect battery and clean and tighten terminals as required.
• Inspect automatic transmission fluid if equipped with dipstick.
• Inspect brake pads, shoes, rotors, drums, hoses and park brake.

At Every Oil Change Interval As Indicated By Oil Change Indicator System:
• Inspect engine cooling system protection and hoses.
• Inspect exhaust system.
• Inspect engine air cleaner if using in dusty or off-road conditions.

Maintenance Chart

Refer to the Maintenance Schedules on the following pages for the required maintenance intervals.

Mileage or time passed (whichever comes first)	20,000	30,000	40,000	50,000	60,000	70,000	80,000	90,000	100,000	110,000	120,000	130,000	140,000	150,000
Or Years:	**2**	**3**	**4**	**5**	**6**	**7**	**8**	**9**	**10**	**11**	**12**	**13**	**14**	**15**
Or Kilometers:	32,000	48,000	64,000	80,000	96,000	112,000	128,000	144,000	160,000	176,000	192,000	208,000	224,000	240,000
Additional Inspections														
Inspect the CV joints.		X			X			X			X			X
Inspect front suspension, tie rod ends, and replace if necessary.	X		X		X		X		X		X		X	
Inspect the brake linings, parking brake function.	X		X		X		X		X		X		X	

Mileage or time passed (whichever comes first)	20,000	30,000	40,000	50,000	60,000	70,000	80,000	90,000	100,000	110,000	120,000	130,000	140,000	150,000
Or Years:	**2**	**3**	**4**	**5**	**6**	**7**	**8**	**9**	**10**	**11**	**12**	**13**	**14**	**15**
Or Kilometers:	**32,000**	**48,000**	**64,000**	**80,000**	**96,000**	**112,000**	**128,000**	**144,000**	**160,000**	**176,000**	**192,000**	**208,000**	**224,000**	**240,000**
Additional Maintenance														
Replace engine air filter.		X			X			X			X			X
Replace air conditioning filter.	X		X		X		X		X		X		X	
Replace spark plugs (2.4L Engine). **		X			X			X			X			X
Replace spark plugs (3.6L Engine). **									X					
Flush and replace the engine coolant at 10 years or 150,000 miles (240,000 km) whichever comes first.									X					X
Change the automatic transmission fluid and filter.											X			

Mileage or time passed (whichever comes first)	20,000	30,000	40,000	50,000	60,000	70,000	80,000	90,000	100,000	110,000	120,000	130,000	140,000	150,000
Or Years:	2	3	4	5	6	7	8	9	10	11	12	13	14	15
Or Kilometers:	32,000	48,000	64,000	80,000	96,000	112,000	128,000	144,000	160,000	176,000	192,000	208,000	224,000	240,000
Change the automatic transmission fluid and filter if using your vehicle for any of the following: police, taxi, fleet, or frequent trailer towing.					X									
Replace rear drive assembly (RDA) fluid.					X						X			
Replace power transfer unit (PTU) fluid.					X						X			
Inspect and replace PCV valve if necessary.									X					

** The spark plug change interval is mileage based only, yearly intervals do not apply.

WARNING!

- **You can be badly injured working on or around a motor vehicle. Do only service work for which you have the knowledge and the right equipment. If you have any doubt about your ability to perform a service job, take your vehicle to a competent mechanic.**
- **Failure to properly inspect and maintain your vehicle could result in a component malfunction and effect vehicle handling and performance. This could cause an accident.**

IF YOU NEED CONSUMER ASSISTANCE

CONTENTS

- SUGGESTIONS FOR OBTAINING SERVICE FOR YOUR VEHICLE 613
  - Prepare For The Appointment. 613
  - Prepare A List 613
  - Be Reasonable With Requests 613
- IF YOU NEED ASSISTANCE 613
  - Chrysler Group LLC Customer Center. 614
  - Chrysler Canada Inc. Customer Center 614
  - In Mexico Contact:. 615
  - Customer Assistance For The Hearing Or Speech Impaired (TDD/TTY). 615
  - Service Contract 615
- WARRANTY INFORMATION 616
- MOPAR® PARTS 617
- REPORTING SAFETY DEFECTS 617
  - In The 50 United States And Washington, D.C. . .617
  - In Canada. 617
- PUBLICATION ORDER FORMS 618

■ DEPARTMENT OF TRANSPORTATION UNIFORM TIRE QUALITY GRADES 619

- Treadwear 619
- Traction Grades 619
- Temperature Grades 620

SUGGESTIONS FOR OBTAINING SERVICE FOR YOUR VEHICLE

Prepare For The Appointment

If you are having warranty work done, be sure to have the right papers with you. Take your warranty folder. All work to be performed may not be covered by the warranty. Discuss additional charges with the service manager. Keep a maintenance log of your vehicle's service history. This can often provide a clue to the current problem.

Prepare A List

Make a written list of your vehicle's problems or the specific work you want done. If you've had an accident or work done that is not on your maintenance log, let the service advisor know.

Be Reasonable With Requests

If you list a number of items and you must have your vehicle by the end of the day, discuss the situation with the service advisor and list the items in order of priority. At many authorized dealers, you may obtain a rental vehicle at a minimal daily charge. If you need a rental, it is advisable to make these arrangements when you call for an appointment.

IF YOU NEED ASSISTANCE

The manufacturer and its authorized dealer are vitally interested in your satisfaction. We want you to be happy with our products and services.

Warranty service must be done by an authorized dealer. We strongly recommend that you take the vehicle to an authorized dealer. They know your vehicle the best, and are most concerned that you get prompt and high quality service. The manufacturer's authorized dealer have the

facilities, factory-trained technicians, special tools, and the latest information to ensure the vehicle is fixed correctly and in a timely manner.

This is why you should always talk to an authorized dealer service manager first. Most matters can be resolved with this process.

- If for some reason you are still not satisfied, talk to the general manager or owner of the authorized dealer. They want to know if you need assistance.
- If an authorized dealer is unable to resolve the concern, you may contact the manufacturer's customer center.

Any communication to the manufacturer's customer center should include the following information:

- Owner's name and address
- Owner's telephone number (home and office)
- Authorized dealer name
- Vehicle Identification Number (VIN)
- Vehicle delivery date and mileage

Chrysler Group LLC Customer Center

P.O. Box 21–8004

Auburn Hills, MI 48321–8004

Phone: (800) 423–6343

Chrysler Canada Inc. Customer Center

P.O. Box 1621

Windsor, Ontario N9A 4H6

Phone: (800) 465–2001 English / (800) 387–9983 French

In Mexico Contact:

Av. Prolongacion Paseo de la Reforma, 1240

Sante Fe C.P. 05109

Mexico, D. F.

In Mexico City: 5081-7568

Outside Mexico City: 1-800-505-1300

Customer Assistance For The Hearing Or Speech Impaired (TDD/TTY)

To assist customers who have hearing difficulties, the manufacturer has installed special TDD (Telecommunication Devices for the Deaf) equipment at its customer center. Any hearing or speech impaired customer, who has access to a TDD or a conventional teletypewriter (TTY) in the United States, can communicate with the manufacturer by dialing 1–800–380–CHRY.

Canadian residents with hearing difficulties that require assistance can use the special needs relay service offered by Bell Canada. For TTY teletypewriter users, dial 711 and for Voice callers, dial 1-800-855-0511 to connect with a Bell Relay Service operator.

Service Contract

You may have purchased a service contract for a vehicle to help protect you from the high cost of unexpected repairs after the manufacturer's New Vehicle Limited Warranty expires. The manufacturer stands behind only the manufacturer's service contracts. If you purchased a manufacturer's service contract, you will receive Plan Provisions and an Owner Identification Card in the mail within three weeks of the vehicle delivery date. If you have any questions about the service contract, call the manufacturer's Service Contract National Customer Hotline at 1-800-521-9922 (Canadian residents, call (800) 465–2001 English / (800) 387–9983 French).

The manufacturer will not stand behind any service contract that is not the manufacturer's service contract. It is not responsible for any service contract other than the manufacturer's service contract. If you purchased a service contract that is not a manufacturer's service contract, and you require service after the manufacturer's New Vehicle Limited Warranty expires, please refer to the contract documents, and contact the person listed in those documents.

We appreciate that you have made a major investment when you purchased the vehicle. An authorized dealer has also made a major investment in facilities, tools, and training to assure that you are absolutely delighted with the ownership experience. You will be pleased with their sincere efforts to resolve any warranty issues or related concerns.

WARNING!

Engine exhaust (internal combustion engines only), some of its constituents, and certain vehicle components contain, or emit, chemicals known to the State of California to cause cancer and birth defects, or other reproductive harm. In addition, certain fluids contained in vehicles and certain products of component wear contain, or emit, chemicals known to the State of California to cause cancer and birth defects, or other reproductive harm.

WARRANTY INFORMATION

See the Warranty Information Booklet, located on the DVD, for the terms and provisions of Chrysler Group LLC warranties applicable to this vehicle and market.

MOPAR® PARTS

MOPAR® fluids, lubricants, parts, and accessories are available from an authorized dealer. They are recommended for your vehicle in order to help keep the vehicle operating at its best.

REPORTING SAFETY DEFECTS

In The 50 United States And Washington, D.C.

If you believe that your vehicle has a defect that could cause a crash or cause injury or death, you should immediately inform the National Highway Traffic Safety Administration (NHTSA) in addition to notifying the manufacturer.

If NHTSA receives similar complaints, it may open an investigation, and if it finds that a safety defect exists in a group of vehicles, it may order a recall and remedy campaign. However, NHTSA cannot become involved in individual problems between you, your authorized dealer, and the manufacturer.

To contact NHTSA, you may either call the Auto Safety Hotline toll free at 1–888–327–4236 (TTY: 1–800–424– 9153), or go to http://www.safercar.gov; or write to: Administrator, NHTSA, 1200 New Jersey Avenue, SE., West Building, Washington, D.C. 20590. You can also obtain other information about motor vehicle safety from http://www.safercar.gov.

In Canada

If you believe that your vehicle has a safety defect, you should contact the Customer Service Department immediately. Canadian customers who wish to report a safety defect to the Canadian government should contact Transport Canada, Motor Vehicle Defect Investigations and Recalls at 1-800-333-0510 or go to http://www.tc.gc.ca/roadsafety/

PUBLICATION ORDER FORMS

To order the following manuals, you may use either the website or the phone numbers listed below. Visa, Mastercard, American Express, and Discover orders are accepted. If you prefer mailing your payment, please call for an order form.

NOTE: A street address is required when ordering manuals (no P.O. Boxes).

Service Manuals

These comprehensive Service Manuals provide the information that students and professional technicians need in diagnosing/troubleshooting, problem solving, maintaining, servicing, and repairing Chrysler Group LLC vehicles. A complete working knowledge of the vehicle, system, and/or components is written in straightforward language with illustrations, diagrams, and charts.

Diagnostic Procedure Manuals

Diagnostic Procedure Manuals are filled with diagrams, charts and detailed illustrations. These practical manuals make it easy for students and technicians to find and fix problems on computer-controlled vehicle systems and features. They show exactly how to find and correct problems the first time, using step-by-step troubleshooting and drivability procedures, proven diagnostic tests and a complete list of all tools and equipment.

Owner's Manuals

These Owner's Manuals have been prepared with the assistance of service and engineering specialists to acquaint you with specific Chrysler Group LLC vehicles. Included are starting, operating, emergency and maintenance procedures as well as specifications, capabilities and safety tips.

Call toll free at:

- **1–800–890–4038 (U.S.)**
- **1–800–387–1143 (Canada)**

Or

Visit us on the Worldwide Web at:

- www.techauthority.com

DEPARTMENT OF TRANSPORTATION UNIFORM TIRE QUALITY GRADES

The following tire grading categories were established by the National Highway Traffic Safety Administration. The specific grade rating assigned by the tire's manufacturer in each category is shown on the sidewall of the tires on your vehicle.

All passenger car tires must conform to Federal safety requirements in addition to these grades.

Treadwear

The Treadwear grade is a comparative rating, based on the wear rate of the tire when tested under controlled conditions on a specified government test course. For example, a tire graded 150 would wear one and one-half times as well on the government course as a tire graded 100. The relative performance of tires depends upon the actual conditions of their use, however, and may depart significantly from the norm due to variations in driving habits, service practices, and differences in road characteristics and climate.

Traction Grades

The Traction grades, from highest to lowest, are AA, A, B, and C. These grades represent the tire's ability to stop on wet pavement, as measured under controlled conditions on specified government test surfaces of asphalt and

concrete. A tire marked C may have poor traction performance.

WARNING!

The traction grade assigned to this tire is based on straight-ahead braking traction tests, and does not include acceleration, cornering, hydroplaning, or peak traction characteristics.

Temperature Grades

The temperature grades are A (the highest), B, and C, representing the tire's resistance to the generation of heat and its ability to dissipate heat, when tested under controlled conditions on a specified indoor laboratory test wheel. Sustained high temperature can cause the material of the tire to degenerate and reduce tire life, and excessive temperature can lead to sudden tire failure. The grade C corresponds to a level of performance, which all passenger car tires must meet under the Federal Motor Vehicle Safety Standard No. 109. Grades B and A represent higher levels of performance on the laboratory test wheel, than the minimum required by law.

WARNING!

The temperature grade for this tire is established for a tire that is properly inflated and not overloaded. Excessive speed, under-inflation, or excessive loading, either separately or in combination, can cause heat buildup and possible tire failure.

INDEX

About Your Brakes 431
ABS (Anti-Lock Brake System) 434
Adding Engine Coolant (Antifreeze) 563
Adding Fuel 489
Adding Washer Fluid 558
Additives, Fuel 483
Air bag 61
Air Bag
  Advance Front Air Bag 62
  Air Bag Components 61
  Air bag Operation 64
  Air Bag Warning Light 73
  Enhanced Accident Response 72
  Event Data Recorder (EDR) 75
  Front Air Bag 61
  If A Deployment Occurs 71
  Knee Impact Bolsters 65
  Maintaining Your Air Bag System 75
  Side Air Bags 66
  Transporting Pets 102
Air bag Deployment 61
Air bag Light 73
Air bag Maintenance 75
Air Cleaner, Engine (Engine Air Cleaner Filter) 550
Air Conditioner Maintenance 552
Air Conditioning Filter 401
Air Conditioning, Operating Tips 400
Air Conditioning, Rear Zone 381
Air Conditioning Refrigerant 552
Air Conditioning System 552
Air Pressure, Tires 458
Alarm Light 305
Alarm, Panic 22
Alarm (Security Alarm) 17
Alarm System (Security Alarm) 17
All Wheel Drive (AWD) 425
Alterations/Modifications, Vehicle 7
Antifreeze (Engine Coolant) 562

Disposal 565
Anti-Lock Brake System (ABS) 434
Anti-Lock Warning Light 304
Appearance Care 575
Arming System (Security Alarm) 17
Assist, Hill Start 443
Auto Down Power Windows 40
Automatic Dimming Mirror 116
Automatic Door Locks 31
Automatic Headlights 223
Automatic Oil Change Indicator 315
Automatic Transmission 413
Adding Fluid 571
Fluid and Filter Changes 573
Fluid Level Check 571
Fluid Type 601
Gear Ranges 417
Special Additives 570
Autostick 424
Auto Unlock, Doors 31
Auxiliary Electrical Outlet (Power Outlet) 266
Auxiliary Power Outlet 266

Back-Up Lights 593
Battery 551
Keyless Transmitter Replacement (RKE) 23
Location 551
Belts, Seat 105
Bluetooth®
Connecting To A Particular Mobile Phone Or Audio Device After Pairing 155
Connect Or Disconnect Link Between the Uconnect® Phone And Mobile Phone 140
Pair (Link) Uconnect® Phone To A Mobile Phone 125
Body Mechanism Lubrication 555
B-Pillar Location 452
Brake Assist System 437

Brake Control System, Electronic 434
Brake Fluid 601
Brake, Parking 431
Brakes 433
Brake System 433
Anti-Lock (ABS) 434
Fluid Check 568
Master Cylinder 568
Parking 431
Warning Light 303
Brake/Transmission Interlock. 415
Break-In Recommendations, New Vehicle 102
Brightness, Interior Lights 228
Bulb Replacement 589
Bulbs, Light 107

Camera, Rear 248
Capacities, Fluid 597
Caps, Filler
Fuel 489
Oil (Engine) 541
Power Steering 430
Radiator (Coolant Pressure) 565
Carbon Monoxide Warning 104
Cargo Area Cover 284
Cargo Area Features 280
Cargo Compartment 280
Light 280
Luggage Carrier 289
Cargo Load Floor 282
Cargo Management System 282
Rollaway Tonneau Cover 284
Tri-Fold Load Floor 282
Cargo Tie-Downs 283
Cargo (Vehicle Loading) 282
Car Washes 576
Cellular Phone 372

Certification Label 491
Chains, Tire 468
Changing A Flat Tire 514
Chart, Tire Sizing 447
Check Engine Light (Malfunction Indicator Light) . .298
Checking Your Vehicle For Safety 103
Checks, Safety 103
Child Restraint 76
Child Restraints
Booster Seats 83
Child Restraints 76
Child Seat Installation 96
How To Stow An Unused ALR Seat Belt 94
Infants And Child Restraints 79
Install A LATCH-compatible Child Restraint 93
Installing Child Restraints Using The Vehicle Seat Belt 95
Locating The LATCH Anchorages 90
Lower Anchors And Tethers For Children 86
Older Children And Child Restraints 79
Seating Positions 85
Using The Top Tether Anchorage 100
Child Safety Locks 32
Clean Air Gasoline 481
Cleaning
Wheels 577
Coin Holder 275
Cold Weather Operation 411
Compact Disc (CD) Maintenance 372
Compact Spare Tire 462
Computer, Trip/Travel 318
Connector
UCI 370
Universal Consumer Interface (UCI) 370
Conserving Fuel 316
Console, Floor 275
Console, Overhead 250
Contract, Service 615

Coolant Pressure Cap (Radiator Cap) 565
Cooling System. 561
Adding Coolant (Antifreeze) 563
Coolant Capacity 597
Coolant Level 561
Disposal of Used Coolant 565
Drain, Flush, and Refill 562
Inspection 566
Points to Remember 566
Pressure Cap 565
Radiator Cap 565
Selection of Coolant (Antifreeze) 562
Corrosion Protection 575
Cupholders 273
Customer Assistance 613

Data Recorder, Event 75
Daytime Brightness, Interior Lights. 229
Daytime Running Lights 224
Dealer Service. 545
Defroster, Rear Window. 288
Defroster, Windshield 106
Delay (Intermittent) Wipers 230
Diagnostic System, Onboard 543
Dimmer Switch, Headlight. 227
Dipsticks
Automatic Transmission 571
Oil (Engine) 547
Power Steering 430
Disabled Vehicle Towing 535
Disposal
Antifreeze (Engine Coolant) 565
Door Locks
Door Locks 28
Key Fob 28
Remote 28
Remote Keyless Entry (RKE) 28
Door Locks, Automatic 31

Door Opener, Garage. 253
Driving
Through Flowing, Rising, or Shallow Standing Water 427
Driving to Achieve Maximum Fuel Economy. 316
DVD Player (Video Entertainment System™). 347

E-85 Fuel 485
Electrical Outlet, Auxiliary (Power Outlet). 266
Electrical Power Outlets. 266
Electric Remote Mirrors 117
Electronic Brake Control System 434
Brake Assist System 437
Traction Control System 437
Electronic Roll Mitigation (ERM) 438
Electronic Speed Control (Cruise Control) 236
Electronic Stability Control (ESC) 439
Electronic Vehicle Information Center
Instrument Cluster Display 27
Electronic Vehicle Information Center (EVIC). 307
Remote Start 27
Emergency, In Case of
Freeing Vehicle When Stuck 532
Hazard Warning Flasher 511
Jacking 514
Jump Starting 528
Overheating 511
Towing 535
Emission Control System Maintenance 544
Engine 102
Air Cleaner 550
Block Heater 413
Break-In Recommendations 102
Checking Oil Level 547
Compartment 541
Compartment Identification 542
Coolant (Antifreeze) 561
Cooling 561

Exhaust Gas Caution 44
Fails to Start 411
Flooded, Starting 411
Fuel Requirements 480
Jump Starting 528
Oil 547
Oil Change Interval 315
Oil Filler Cap 541
Oil Selection 548
Oil Synthetic 549
Operation 102
Overheating 511
Starting 408
Temperature Gauge 305
Engine Oil Viscosity 549
Engine Oil Viscosity Chart 549
Enhanced Accident Response Feature 72
Entry System, Illuminated 19
Ethanol 481
Event Data Recorder 75
Exhaust Gas Caution. 44
Exhaust System. 104
Exterior Folding Mirrors 119
Exterior Lighting. 222
Exterior Lights 107

Fabric Care. 578
Filler Location Fuel 305
Filters
Air Cleaner 550
Air Conditioning 401
Engine Oil 550
Engine Oil Disposal 550
Flashers
Hazard Warning 511
Turn Signal 107

Flash-To-Pass 227
Flexible Fuel Vehicles
Cruising Range 488
Engine Oil 487
Fuel Requirements 485
Maintenance 488
Replacement Parts 488
Starting 488
Flooded Engine Starting. 411
Floor Console 275
Fluid, Brake 601
Fluid Capacities 597
Fluid Leaks 108
Fluid Level Checks
Automatic Transmission 571
Brake 568
Cooling System 561
Engine Oil 547
Power Steering 430
Fluids, Lubricants and Genuine Parts 598
Fog Lights 225
Fog Light Service 592
Folding Rear Seat 211
Freeing A Stuck Vehicle 532
Fuel. 480
Adding 489
Additives 483
Clean Air 481
Conserving 316
Ethanol 481
Filler Cap (Gas Cap) 305
Filler Door (Gas Cap) 305
Gasoline 480
Gauge 305
Light 312
Materials Added 483
Methanol 481
Octane Rating 480

Requirements 480
Saver Mode 316
Specifications 598
Tank Capacity 597
Fuel, Flexible 485
Fueling 489
Fuel Optimizer 316
Fuel Saver 316
Fuel System Caution 490
Fuses 581

Garage Door Opener (HomeLink®) 253
Gas Cap (Fuel Filler Cap) 489
Gasoline, Clean Air 481
Gasoline (Fuel)
Conserving 316
Gasoline, Reformulated 481
Gauges
Coolant Temperature 305
Fuel 305
Speedometer 305
Tachometer 298
Gear Ranges 417
Gear Select Lever Override 533
General Information 145
Glass Cleaning 580
Gross Axle Weight Rating 492
Gross Vehicle Weight Rating. 492
GVWR 492

Hazard
Driving Through Flowing, Rising, or Shallow Standing Water 427
Hazard Warning Flasher 511
Headlights
Automatic 223
Bulb Replacement 591
Cleaning 579

Delay 224
High Beam 591
High Beam/Low Beam Select Switch 227
Lights On Reminder 225
On With Wipers 223
Passing 227
Switch 222
Time Delay 224
Head Restraints 206
Heated Mirrors 119
Heater, Engine Block 413
High Beam/Low Beam Select (Dimmer) Switch 227
Hill Start Assist. 443
Hitches
Trailer Towing 496
Holder, Coin. 275
Holder, Cup 273
HomeLink® (Garage Door Opener) 253
Hood Release 220

Ignition
Key 11
Illuminated Entry 19
Immobilizer (Sentry Key) 15
Information Center, Vehicle 307
Inside Rearview Mirror 115
Instrument Cluster 298
Instrument Panel and Controls 296
Instrument Panel Cover 578
Instrument Panel Lens Cleaning 580
Interior Appearance Care 578
Interior Fuses 582
Interior Lights 227
Intermittent Wipers (Delay Wipers). 230
Introduction 4
Inverter, Power 271

iPod®/USB/MP3 Control 370
Bluetooth® Streaming Audio 154

Jacking Instructions 519
Jack Location 515
Jack Operation 514
Jump Starting 528

Key Fob
Panic Alarm 22
Programming Additional Key Fobs 16
Programming Additional Transmitters 16
Key-In Reminder 13
Keyless Enter-N-Go 34
Keyless Entry System 20
Keyless Go 11
Key, Replacement 16
Keys 11
Key, Sentry (Immobilizer) 15

Lane Change and Turn Signals 226
Lane Change Assist 227
Lap/Shoulder Belts 47
Latches 107
Hood 220
Lead Free Gasoline 480
Leaks, Fluid 108
Life of Tires 466
Liftgate 42
Liftgate Window Wiper/Washer 286
Light Bulbs 107
Lights 107
Airbag 73
Alarm 305
Anti-Lock 304
Automatic Headlights 223
Back-Up 593

Brake Assist Warning 441
Brake Warning 303
Bulb Replacement 591
Courtesy/Reading 229
Daytime Running 224
Dimmer Switch, Headlight 226
Electronic Stability Program (ESP) Indicator 441
Exterior 107
Fog 225
Hazard Warning Flasher 511
Headlights 222
Headlights On Reminder 225
Headlights On With Wipers 223
Headlight Switch 222
High Beam 227
High Beam Indicator 300
High Beam/Low Beam Select 227
Illuminated Entry 19
Instrument Cluster 222
Intensity Control 228
Interior 227
License 596
Lights On Reminder 225
Low Fuel 312
Malfunction Indicator (Check Engine) 298
Map Reading 229
Parade Mode (Daytime Brightness) 229
Park 591
Passing 227
Reading 229
Rear Servicing 593
Rear Tail Lamps 593
Seat Belt Reminder 302
Security Alarm 305
Service 589
Service Engine Soon (Malfunction Indicator) 298
Side Marker 591
Tire Pressure Monitoring (TPMS) 301

Traction Control 441
Turn Signal 107
Vanity Mirror 120
Warning (Instrument Cluster Description) 298
Load Floor, Cargo 282
Loading Vehicle 491
Capacities 493
Tires 452
Locks 28
Automatic Door 31
Auto Unlock 31
Child Protection 32
Door 28
Power Door 30
Low Tire Pressure System 470
Lubrication, Body 555
Luggage Rack (Roof Rack) 289
Lug Nuts 513
Maintenance Free Battery 551
Maintenance Procedures 546
Malfunction Indicator Light (Check Engine) 298
Manual, Service 618
Manual Transaxle
Fluid Level Check 574
Lubricant Selection 574
Map/Reading Lights 229
Marker Lights, Side 591
Master Cylinder (Brakes) 568
Methanol 481
Mini-Trip Computer 318
Mirrors 115
Automatic Dimming 116
Electric Powered 117
Electric Remote 117
Exterior Folding 119
Heated 119
Outside 116

Rearview 115
Vanity 120
Mode
Fuel Saver 316
Modifications/Alterations, Vehicle 7
Monitor, Tire Pressure System 470
MOPAR® Parts. 545
MTBE/ETBE 481
Multi-Function Control Lever. 226

New Vehicle Break-In Period 102

Occupant Restraints 44
Octane Rating, Gasoline (Fuel) 480
Odometer. 300
Oil Change Indicator. 301
Oil Change Indicator, Reset 301
Oil, Engine. 547
Capacity 597
Change Interval 315
Checking 547
Dipstick 547
Disposal 550
Filter 550
Filter Disposal 550
Identification Logo 548
Materials Added to 550
Recommendation 548
Synthetic 549
Viscosity 549
Oil Filter, Selection 550
Onboard Diagnostic System 543
Opener, Garage Door (HomeLink®) 253
Operating Precautions 543
Operator Manual (Owner's Manual) 4
Outside Rearview Mirrors 116
Overhead Console. 250
Overheating, Engine 306

Owner's Manual (Operator Manual) 4

Paint Care 575
Panic Alarm 22
Parking Brake 431
ParkSense® System, Rear 240
Passenger Seat Back Tilt (Easy Entry System) 216
Passing Light 227
Pets 102
Phone (Pairing) 153
Phone (Uconnect®) 120
Placard, Tire and Loading Information 453
Power
  Brakes 433
  Distribution Center (Fuses) 585
  Door Locks 30
  Inverter 271
  Mirrors 117
  Outlet (Auxiliary Electrical Outlet) 266
  Seats 198
  Steering 429
  Sunroof 263
  Transfer Unit 574
  Windows 39
Power Steering Fluid 601
Power Transfer Unit 574
Pregnant Women and Seat Belts 54
Preparation for Jacking 516
Pretensioners
  Seat Belts 54
Programming Transmitters (Remote Keyless Entry) . .20

Radial Ply Tires 460
Radiator Cap (Coolant Pressure Cap) 565
Radio Operation 372
Radio Remote Controls 370
Rear Air Conditioning 381
Rear Axle (Differential) 574

Rear Camera 248
Rear Cupholder 273
Rear Drive Assembly. 574
Rear Liftgate 42
Rear ParkSense System 240
Rear Seat, Folding 211
Rear Window Defroster 288
Rear Window Features 286
Rear Wiper/Washer. 286
Reclining Front Seats 203
Reclining Rear Seats 214
Recorder, Event Data 75
Recreational Towing 507
Reformulated Gasoline 481
Refrigerant 553
Release, Hood. 220
Reminder, Lights On 225
Reminder, Seat Belt. 46
Remote Control
  Starting System 25
Remote Keyless Entry (RKE) 20
  FCC General Information 24
  Panic Alarm 22
  Programming Additional Key Fobs 16
  Programming Additional Transmitters 16
Remote Sound System (Radio) Controls 370
Remote Starting
  Exit Remote Start Mode 27
  To Exit Remote Start Mode And Drive The Vehicle . .27
Remote Starting System. 25
Replacement Bulbs 589
Replacement Keys 16
Replacement Parts. 545
Replacement Tires 466
Reporting Safety Defects 617
Resetting Oil Change Indicator. 301

Restraint, Head 206
Restraints, Child 76
Retractable Cargo Area Cover 284
Reverse Lights 593
Rocking Vehicle When Stuck 532
Roof Rack (Luggage Rack) 289
Rotation, Tires 469

Safety Checks Inside Vehicle 105
Safety Checks Outside Vehicle 107
Safety Defects, Reporting 617
Safety, Exhaust Gas 44
Safety Information, Tire 446
Safety Tips 103
Seat Belt
  Adjustable Upper Shoulder Belt Anchorage 52
  Automatic Locking Retractor (ALR) 55
  BeltAlert® 46
  Energy Management Feature 54
  Lap/Shoulder Belt Operation 50
  Lap/Shoulder Belts 47
  Lap/Shoulder Belt Untwisting 52
  Pregnant Women 54
  Seat Belt Extender 53
  Seat Belt Pretensioner 54
  Seat Belt Reminder 46
Seat Belt Maintenance 580
Seat Belt Reminder 46
Seat Belts 46
  Adjustable Shoulder Belt 52
  Adjustable Upper Shoulder Anchorage 52
  And Pregnant Women 54
  Child Restraint 76
  Extender 53
  Front Seat 46
  Inspection 105
  Operating Instructions 50
  Pretensioners 54

Rear Seat 47
Untwisting Procedure 52
Seats 197
Adjustment 197
Easy Entry 216
Height Adjustment 198
Power 198
Rear Folding 211
Reclining 203
Reclining Rear 214
Seatback Release 205
Tilting 198
Security Alarm 17
Selection of Coolant (Antifreeze). 598
SENTRY KEY®
FCC General Information 16
Key Programming 16
Sentry Key (Immobilizer) 15
Sentry Key Replacement 16
Service Assistance 613
Service Contract 615
Service Engine Soon Light (Malfunction Indicator) . . .298
Service Manuals 618
Shift Lever Override 533
Shoulder Belts 47
Side View Mirror Adjustment. 116
Signals, Turn 107
Snow Chains (Tire Chains). 468
Snow Tires 462
Spare Tire. 462
Spark Plugs 598
Specifications
Fuel (Gasoline) 598
Oil 598
Speed Control (Cruise Control). 236
Speedometer. 305
Starting 25
Automatic Transmission 408

Cold Weather 411
Engine Fails to Start 411
Remote 25
Starting and Operating 408
Starting Procedures 408
Steering
Column Controls 226
Column Lock 234
Power 429
Tilt Column 234
Wheel, Heated 235
Wheel, Tilt 234
Steering Wheel Audio Controls 370
Steering Wheel Mounted Sound System Controls . . .370
Storage, Vehicle. 400
Stuck, Freeing. 532
Sunglasses Storage 252
Sun Roof 263
Sun Visor Extension 120
Supplemental Restraint System - Airbag 62
Sway Control, Trailer. 442
Synthetic Engine Oil 549
System, Remote Starting 25

Tachometer. 298
Taillights 593
Telescoping Steering Column 234
Temperature Gauge, Engine Coolant 305
Tie Down Hooks, Cargo 283
Tilt Steering Column 234
Time Delay, Headlight 224
Tire and Loading Information Placard 452
Tire Markings 446
Tires 107
Aging (Life of Tires) 466
Air Pressure 457
Chains 468
Changing 514

Compact Spare 462
General Information 457
High Speed 460
Inflation Pressures 458
Jacking 514
Life of Tires 466
Load Capacity 452
Pressure Monitor System (TPMS) 470
Pressure Warning Light 301
Quality Grading 619
Radial 460
Replacement 466
Rotation 469
Safety 446
Sizes 447
Snow Tires 462
Spare Tire 515
Spinning 464
Trailer Towing 501
Tread Wear Indicators 465
Tire Safety Information 446
Tongue Weight/Trailer Weight 498
To Open Hood 220
Towing 493
Behind a Motorhome 507
Disabled Vehicle 535
Guide 497
Recreational 507
Weight 497
Towing Vehicle Behind a Motorhome 507
Traction 426
Traction Control 437
Trailer Sway Control (TSC) 442
Trailer Towing 493
Cooling System Tips 506
Hitches 496
Minimum Requirements 499
Tips 505

Trailer and Tongue Weight 498
Wiring 503
Trailer Towing Guide. 497
Trailer Weight. 497
Transaxle
Autostick 424
Transmission
Automatic 413
Filter 573
Fluid 570
Transmitter Battery Service (Remote Keyless Entry) . .23
Transmitter, Garage Door Opener (HomeLink®). . . .253
Transmitter Programming (Remote Keyless Entry) . . .20
Transmitter, Remote Keyless Entry (RKE) 20
Transporting Pets 102
Tread Wear Indicators 465
Trip Odometer 300
Turn Signals 226
UCI Connector 370
Uconnect®
Advanced Phone Connectivity 140
Operation 123
Phone Call Features 130
Phone Features 135
Screen Activated Features 21
Things You Should Know About Your Uconnect® Phone 140
Uconnect® Settings 22
Uconnect® phone 120
Uconnect® Phone 146
Uconnect® Settings. 21
Uconnect® Voice Command. 183
Underhood Fuses 585
Uniform Tire Quality Grades 619
Universal Consumer Interface (UCI) Connector 370
Universal Transmitter 253
Unleaded Gasoline 480

Untwisting Procedure, Seat Belt 52
Upholstery Care 578

Vanity Mirrors 120
Vehicle Certification Label 491
Vehicle Identification Number (VIN) 6
Vehicle Loading 454
Vehicle Modifications/Alterations 7
Vehicle Security Alarm (Security Alarm) 17
Vehicle Storage 400
Viscosity, Engine Oil 549
Voice Command 183

Warning Flasher, Hazard 511
Warning Lights (Instrument Cluster Description) . . .298
Warnings and Cautions. 6
Warranty Information 616
Washer
  Adding Fluid 558
Washers, Windshield 229
Washing Vehicle 576
Water
  Driving Through 427
Wheel and Wheel Trim 577
Wheel and Wheel Trim Care 577
Wind Buffeting. 42
Window Fogging 401
Windows 39
  Power 39
  Wind Buffeting 42
Windshield Defroster. 106
Windshield Washers 229
  Fluid 558
Windshield Wiper Blades. 556
Windshield Wipers 229
Wiper Blade Replacement 556
Wiper, Delay. 230
Wiper, Rear 286

Wipers, Intermittent 230
Wrecker Towing 535

INSTALLATION OF RADIO TRANSMITTING EQUIPMENT

Special design considerations are incorporated into this vehicle's electronic system to provide immunity to radio frequency signals. Mobile two-way radios and telephone equipment must be installed properly by trained personnel. The following must be observed during installation.

The positive power connection should be made directly to the battery and fused as close to the battery as possible. The negative power connection should be made to body sheet metal adjacent to the negative battery connection. This connection should not be fused.

Antennas for two-way radios should be mounted on the roof or the rear area of the vehicle. Care should be used in mounting antennas with magnet bases. Magnets may affect the accuracy or operation of the compass on vehicles so equipped.

The antenna cable should be as short as practical and routed away from the vehicle wiring when possible. Use only fully shielded coaxial cable.

Carefully match the antenna and cable to the radio to ensure a low Standing Wave Ratio (SWR).

Mobile radio equipment with output power greater than normal may require special precautions.

All installations should be checked for possible interference between the communications equipment and the vehicle's electronic systems.

DODGE

SERVICE

STICK WITH THE SPECIALISTS®

Chrysler Group LLC

15JC49-126-AB

Second Edition

Printed in U.S.A