This section explains why it is important to keep your vehicle well maintained and how to follow basic maintenance safety precautions.

This section also includes instructions on how to read the maintenance minder messages on the information display or multi-information display (depending on models), and instructions for simple maintenance tasks you may want to take care of yourself.

If you have the skills and tools to perform more complex maintenance tasks on your vehicle, you may want to purchase the service manual. See page 407 for information on how to obtain a copy, or see your dealer.

U.S. Vehicles:
Maintenance, replacement, or repair of emissions control devices and systems may be done by any automotive repair establishment or individual using parts that are "certified" to EPA standards.

Maintenance Safety 312
Maintenance Minder 313
Fluid Locations 325
Adding Engine Oil 326
Changing the Engine Oil and Filter 327
Engine Coolant 329
Windshield Washers 330
Automatic Transmission Fluid 331
Rear Differential Fluid 333
Transfer Assembly Fluid 333
Brake Fluid 334
Power Steering Fluid 335
Timing Belt 336
Lights 336
Cleaning the Seat Belts 344
Floor Mats 345
Dust and Pollen Filter 345
Wiper Blades 346
Wheels 348
Tires 348
Checking the Battery 356
Vehicle Storage 357

Maintenance Safety

All service items not detailed in this section should be performed by a certified technician or other qualified mechanic.

Important Safety Precautions
To eliminate potential hazards, read the instructions before you begin, and make sure you have the tools and skills required.

- Make sure your vehicle is parked on level ground, the parking brake is set, and the engine is off.
- To clean parts, use a commercially available degreaser or parts cleaner, not gasoline.
- To reduce the possibility of fire or explosion, keep cigarettes, sparks, and flames away from the battery and all fuel-related parts.
- Wear eye protection and protective clothing when working with the battery or compressed air.

⚠ WARNING

Improperly maintaining this vehicle, or failing to correct a problem before driving can cause a crash in which you can be seriously hurt or killed.

Always follow the inspection and maintenance recommendations and schedules in this owner's manual.

Potential Vehicle Hazards

- **Carbon Monoxide poison from engine exhaust.** Be sure there is adequate ventilation whenever you operate the engine.
- **Burns from hot parts.** Let the engine and exhaust system cool down before touching any parts.
- **Injury from moving parts.** Do not run the engine unless instructed to do so.

⚠ WARNING

Failure to properly follow maintenance instructions and precautions can cause you to be seriously hurt or killed.

Always follow the procedures and precautions in this owner's manual.

Some of the most important safety precautions are given here. However, we cannot warn you of every conceivable hazard that can arise in performing maintenance. Only you can decide whether or not you should perform a given task.

Maintenance Minder

Your vehicle displays engine oil life and maintenance service items on the information display or multi-information display (depending on models) to show you when you should have your dealer perform engine oil replacement and indicated maintenance services.

Based on the engine operating conditions and accumulated engine revolutions, the onboard computer in your vehicle calculates the remaining engine oil life and displays it as a percentage.

The remaining engine oil life is shown on the display according to this table:

Calculated Engine Oil Life (%)	Displayed Engine Oil Life (%)
100 %－91 %	100 %
90 %－81 %	90 %
80 %－71 %	80 %
70 %－61 %	70 %
60 %－51 %	60 %
50 %－41 %	50 %
40 %－31 %	40 %
30 %－21 %	30 %
20 %－16 %	20 %
15 %－11 %	15 %
10 %－6 %	10 %
5 %－1 %	5 %
0 %	0 %

Engine Oil Life Display

On models without navigation system

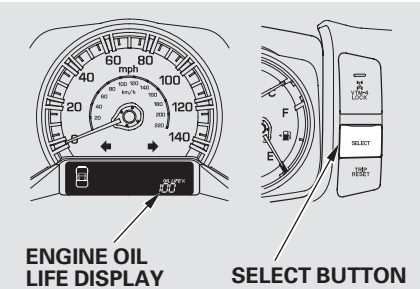

U.S. model is shown.

To see the current engine oil life, turn the ignition switch to the ON (II) position, and press the SELECT button repeatedly until the engine oil life display appears (see page 78).

CONTINUED

Maintenance Minder

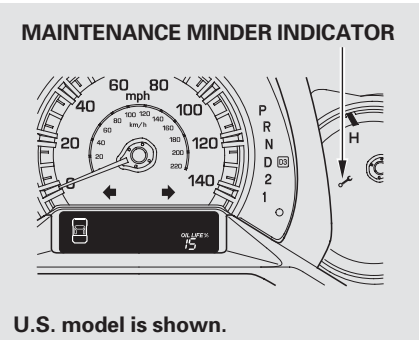

U.S. model is shown.

If the remaining engine oil life is 15 to 6 percent, you will see the engine oil life indicator every time you turn the ignition switch to the ON (II) position. The maintenance minder indicator will also come on, and the maintenance item code(s) for other scheduled maintenance items needing service will be displayed near the “OIL LIFE” message.

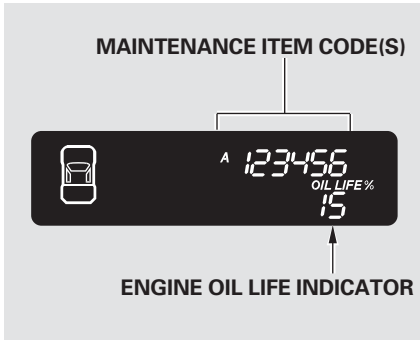

The 15 and 10 percent oil life indicator reminds you that the time is coming soon to take your vehicle in for the required maintenance.

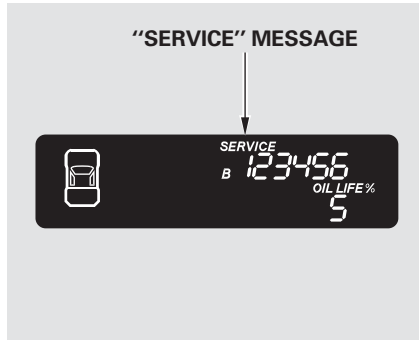

When the remaining engine oil life is 5 to 1 percent, you will see a “SERVICE” message along with the same maintenance item code(s), every time you turn the ignition switch to the ON (II) position.

Maintenance Minder

The maintenance item code or codes indicate the main and sub items required at the time of the oil change (see page 316).

You can switch the information display from the engine oil life display to the odometer or the trip meter. Press and release the SELECT button on the dashboard.

When the engine oil life is 15 to 1 percent, the maintenance minder indicator ( ) comes on every time you turn the ignition switch to the ON (II) position, then it goes out if you switch the information display.

When you see this message, have the indicated maintenance performed by your dealer as soon as possible.

When the remaining engine oil life is 0 percent, the engine oil life indicator will blink. The display comes on every time you turn the ignition switch to the ON (II) position. The maintenance minder indicator ( ) also comes on and remains on in the instrument panel. When you see this message, immediately have the indicated maintenance done by your dealer.

U.S. model is shown.

If you do not perform the indicated maintenance, negative distance traveled is displayed and begins to blink after the vehicle has been driven 10 miles (10 km) or more.

Negative distance traveled means your vehicle has passed the maintenance required point.

Immediately have the indicated maintenance done by your dealer.

CONTINUED

Maintenance Minder

To change the information display from the engine oil life display to the odometer or the trip meter, press and release the SELECT button.

When the engine oil life is 0 percent or negative distance traveled, the maintenance minder indicator (🔧) remains on even if you change the information display.

Immediately have the service performed, and make sure to reset the display as described as follows.

Maintenance Main Items and Sub Items

On models without navigation system

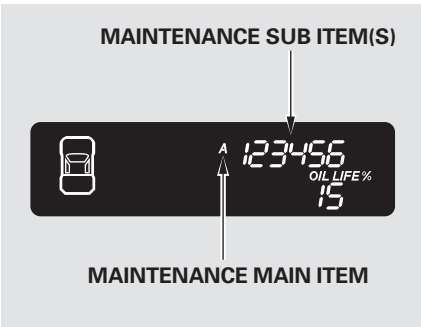

All maintenance items displayed on the information display are in code. For an explanation of these maintenance codes, see page 324 .

Resetting the Engine Oil Life Display

On models without navigation system

Your dealer will reset the display after completing the required maintenance service. You will see “OIL LIFE 100%” on the information display the next time you turn the ignition switch to the ON (II) position.

If maintenance service is done by someone other than your dealer, reset the maintenance minder as follows:

1. Turn the ignition switch to the ON (II) position.

2. Press the SELECT button repeatedly until the engine oil life is displayed.

3. Press the TRIP/RESET button for about 10 seconds. The engine oil life and the maintenance item code(s) will blink.

4. Press the TRIP/RESET button for another 5 seconds. The maintenance item code(s) will disappear, and the engine oil life will reset to “100.”

On models with navigation system

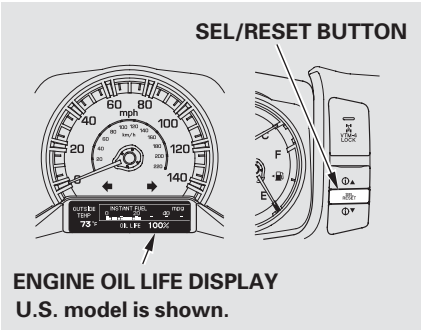

To see the current engine oil life, turn the ignition switch to the ON (II) position, and push and release the SEL/RESET button on the dashboard repeatedly, until the engine oil life is displayed (see page 83).

CONTINUED

Maintenance Minder

MAINTENANCE ITEM CODE(S)

When the remaining engine oil life is 15 percent or less, the display shows a “SERVICE DUE SOON” message along with the maintenance item code(s) for other scheduled maintenance items needing service.

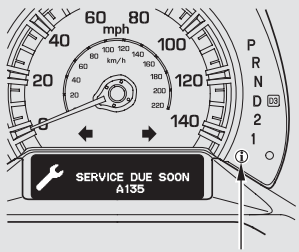

SYSTEM MESSAGE INDICATOR

U.S. model is shown.

The system message indicator on the instrument panel will also come on, and a beeper will sound.

To cancel the system message, press and release the INFO (▲/▼) button on the dashboard. At this time, the system message indicator will also be turned off. Then the display will change to the engine oil life display.

You will also see the system message every time you turn the ignition switch to the ON (II) position until you have the indicated maintenance performed by your dealer.

The maintenance item code(s) indicate the main and sub items required at the time of the oil change (see page 321).

When the remaining engine oil life is less than 5 percent, you will see the above display. The display then changes to “SERVICE DUE NOW.” Have the indicated maintenance done as soon as possible.

The system message indicator on the instrument panel will also come on, and a beeper will sound.

To cancel the system message, press and release the INFO (▲/▼) button on the dashboard. At this time, the system message indicator will also be turned off. Then the display will change to the engine oil life display.

You will also see the system message every time you turn the ignition switch to the ON (II) position until you have the indicated maintenance performed by your dealer.

CONTINUED

Maintenance Minder

U.S.

Canada

If the indicated required service is not done and the remaining engine oil life becomes 0%, the multi-information display will show a “SERVICE PAST DUE” message, the total distance traveled after the remaining oil life became 0%, and the maintenance item code(s).

To cancel the system message, press and release the INFO (▲/▼) button on the dashboard. At this time, the system message indicator will ***not*** be turned off. Then the display will change to the engine oil life display.

The system message will appear again by pressing the INFO (▲/▼) button after canceling it.

You will also see the system message every time you turn the ignition switch to the ON (II) position until you have the indicated maintenance performed by your dealer.

Negative distance traveled means your vehicle has passed the maintenance required point.

Immediately have the service performed, and make sure to reset the display as described on page 321 .

Maintenance Main Items and Sub Items

On models with navigation system

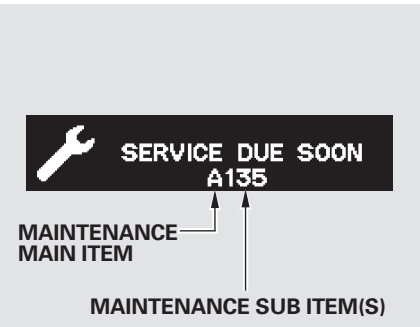

All maintenance items displayed on the information display are in code. For an explanation of these maintenance codes, see page 324.

Resetting the Engine Oil Life Display

On models with navigation system

Your dealer will reset the display after completing the required maintenance service. You will see "OIL LIFE 100%" on the display the next time you turn the ignition switch to the ON (II) position.

If maintenance service is done by someone other than your dealer, reset the maintenance minder as follows:

1. Turn the ignition switch to the ON (II) position.

2. Press the SEL/RESET button on the dashboard until you see the engine oil life display.

3. Press and hold the SEL/RESET button for 10 seconds. The multi-information display will ask for a confirmation.

   - If you are sure you want to reset the display, press the SEL/RESET button to select "OK."

   - If you do not want to reset the display, press the INFO (▲/▼) button to select "Cancel."

Maintenance Minder

Important Maintenance Precautions
If you have the required service done but do not reset the display, or reset the display without doing the service, the system will not show the correct maintenance intervals. This can lead to serious mechanical problems because you will no longer have an accurate record of when maintenance is needed.

Your authorized Honda dealer knows your vehicle best and can provide competent, efficient service.

However, service at a dealer is not mandatory to keep your warranties in effect. Maintenance may be done by any qualified service facility or person who is skilled in this type of automotive service. Make sure to have the service facility or person reset the display as previously described. Keep all receipts as proof of completion, and have the person who does the work fill out your Honda Service History or Canadian Maintenance Log. Check your warranty booklet for more information.

We recommend the use of Honda parts and fluids whenever you have maintenance done. These are manufactured to the same high-quality standards as the original components, so you can be confident of their performance and durability.

According to state and federal regulations, failure to perform maintenance on the items marked with # will not void your emissions warranties. However, all maintenance services should be performed in accordance with the intervals indicated by the odometer/trip meter display or the multi-information display.

Owner's Maintenance Checks
You should check the following items at the specified intervals. If you are unsure of how to perform any check, turn to the appropriate page listed.

- Engine oil level — Check every time you fill the fuel tank. See page 253 .
- Engine coolant level — Check the radiator reserve tank every time you fill the fuel tank. See page 253 .
- Automatic transmission — Check the fluid level monthly. See page 331 .
- Brakes — Check the fluid level monthly. See page 334 .
- Tires — Check the tire pressure monthly. Examine the tread for wear and foreign objects. See page 348 .
- Lights — Check the operation of the headlights, parking lights, taillights, high-mount brake light, and license plate lights monthly. See page 336 .

CONTINUED

Maintenance Minder

Symbol	Maintenance Main Items
A	• **Replace engine oil***

B	• **Replace engine oil* and oil filter**
	• **Inspect front and rear brakes**
	• **Check parking brake adjustment**
	• **Inspect these items:**
	  • **Tie rod ends, steering gear box, and boots**
	  • **Suspension components**
	  • **Driveshaft boots**
	  • **Brake hoses and lines (including ABS/VSA)**
	  • **All fluid levels and condition of fluids**
	  • **Exhaust system#**
	  • **Fuel lines and connections#**

* : If the message, ''SERVICE DUE NOW'' or ''SERVICE'' does not appear more than 12 months after the display is reset, change the engine oil every year.

: See information on maintenance and emissions warranty on page 323 .

NOTE :
- Independent of the maintenance messages in the information display, replace the brake fluid every 3 years.
- Inspect idle speed every 160,000 miles (256,000 km).
- Adjust the valves during services A, B, 1, 2, or 3 if they are noisy.

Symbol	Maintenance Sub Items
1	• **Rotate tires**
2	• **Replace air cleaner element** If you drive in dusty conditions, replace every 15,000 miles (24,000 km). • **Replace dust and pollen filter** If you drive primarily in urban areas that have high concentrations of soot in the air from industry and from diesel-powered vehicles, replace every 15,000 miles (24,000 km). • **Inspect drive belt**
3	• **Replace transmission and transfer fluid**
4	• **Replace spark plugs** • **Replace timing belt and inspect water pump** If you drive regularly in very high temperatures (over 110°F, 43°C), in very low temperatures (under −20°F, −29°C), or towing a trailer, replace every 60,000 miles (U.S.)/100,000 km (Canada). • **Inspect valve clearance**
5	• **Replace engine coolant**
6	• **Replace VTM-4 rear differential fluid** Driving in mountainous areas at very low vehicle speeds or trailer towing results in higher level of mechanical (shear) stress to fluid. This requires differential fluid changes more frequently than recommended by the maintenance minder. If you regularly drive your vehicle under these conditions, have the differential fluid changed at 7,500 miles (12,000 km), then every 15,000 miles (24,000 km).

Fluid Locations

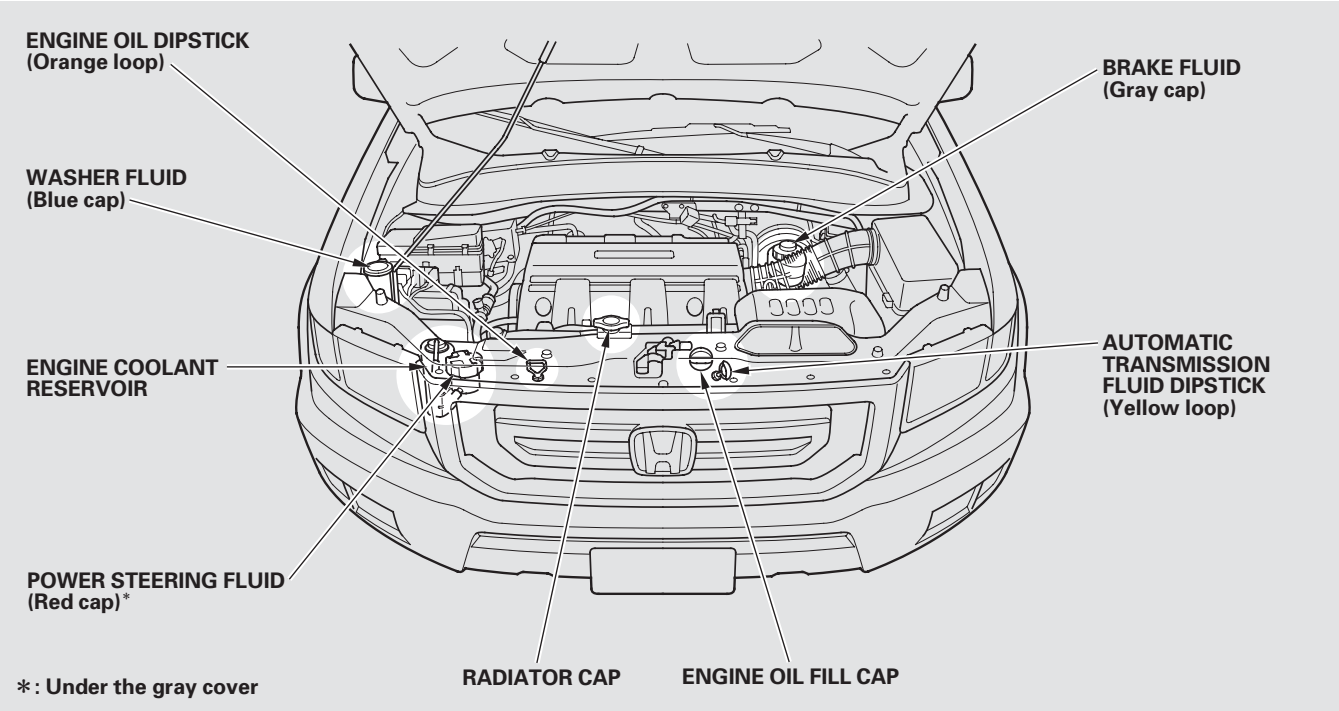

Adding Engine Oil

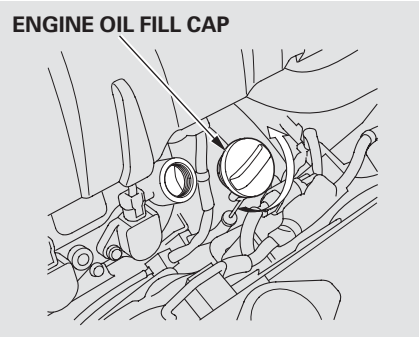

Unscrew and remove the engine oil fill cap on the valve cover. Pour in the oil slowly and carefully so you do not spill any. Clean up any spills immediately. Spilled oil could damage components in the engine compartment. Reinstall the engine oil fill cap, and tighten it securely. Wait a few minutes, and recheck the oil level on the engine oil dipstick. Do not fill above the upper mark; you could damage the engine.

Recommended Engine Oil
Oil is a major contributor to your engine's performance and longevity. Always use a premium-grade 5W-20 detergent oil displaying the API Certification Seal. This seal indicates the oil is energy conserving, and that it meets the American Petroleum Institute's latest requirements.

API CERTIFICATION SEAL

Honda Motor Oil is the preferred 5W-20 lubricant for your vehicle. It is highly recommended that you use Honda Motor Oil in your vehicle for optimum engine protection. Make sure the API Certification Seal says "For Gasoline Engines."

The oil viscosity or weight is provided on the container's label. 5W-20 oil is formulated for year-round protection of your vehicle to improve cold weather starting and fuel economy.

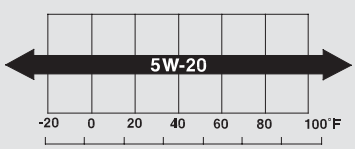

Ambient Temperature

Synthetic Oil
You may use a synthetic motor oil if it meets the same requirements given for a conventional motor oil: it displays the API Certification Seal, and it is the proper weight. You must follow the oil and filter change intervals shown on the odometer/ trip meter display or on the multi-information display.

Engine Oil Additives
Your vehicle does not require any oil additives. Additives may adversely affect the engine or transmission performance and durability.

Changing the Engine Oil and Filter
Always change the oil and filter according to the maintenance messages shown on the information display or multi-information display (depending on models). The oil and filter collect contaminants that can damage your engine if they are not removed regularly.

Changing the oil and filter requires special tools and access from underneath the vehicle. The vehicle should be raised on a service station-type hydraulic lift for this service. Unless you have the knowledge and proper equipment, you should have this maintenance done by a skilled mechanic.

1. Run the engine until it reaches normal operating temperature, then shut it off.

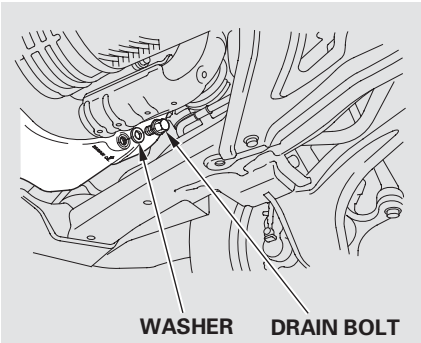

2. Open the hood, and remove the engine oil fill cap. Remove the oil drain bolt and washer from the bottom of the engine. Drain the oil into an appropriate container.

CONTINUED

Changing the Engine Oil and Filter

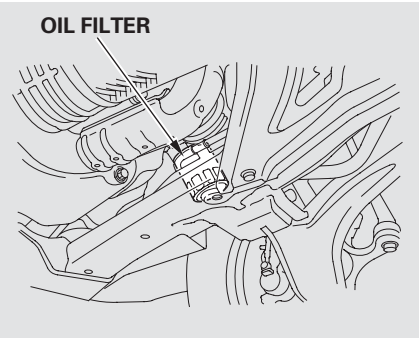

3. Remove the oil filter, and let the remaining oil drain. A special wrench (available from your dealer) is required.

   Make sure the oil filter gasket is not stuck to the contacting surface of the engine. If it is, remove it before installing a new oil filter.

4. Install a new oil filter according to the instructions that come with it. Make sure to clean off any dirt and dust on the contacting surface of a new oil filter.

5. Put a new washer on the drain bolt, then reinstall the drain bolt. Tighten the drain bolt to:
   29 lbf·ft (39 N·m , 4.0 kgf·m)

6. Refill the engine with the recommended oil.

   Engine oil change capacity (including filter):
   4.5 US qt (4.3 ℓ)

7. Reinstall the engine oil fill cap. Start the engine. The oil pressure indicator should go out within 5 seconds. If it does not, turn off the engine, and check your work.

8. Let the engine run for several minutes, then check the drain bolt and oil filter for leaks.

9. Turn off the engine and let it sit for several minutes, then check the oil level on the dipstick. If necessary, add more oil.

NOTICE

Improper disposal of engine oil can be harmful to the environment. If you change your own oil, please dispose of the used oil properly. Put it in a sealed container, and take it to a recycling center. Do not discard it in a trash bin or dump it on the ground.

Adding Engine Coolant

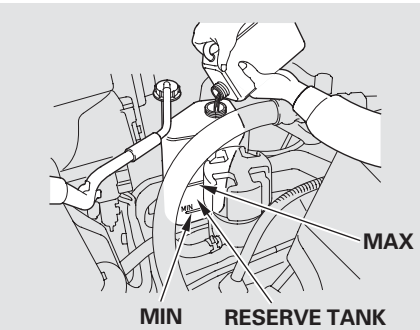

If the coolant level in the reserve tank is at or below the MIN line, add coolant to bring it up to the MAX line. Inspect the cooling system for leaks.

Always use Honda Long-life Anti-freeze/Coolant Type 2. This coolant is pre-mixed with 50 percent antifreeze and 50 percent distilled water. Never add straight antifreeze or plain water.

If Honda antifreeze/coolant is not available, you may use another major-brand non-silicate coolant as a temporary replacement. Make sure it is a high-quality coolant recommended for aluminum engines. Continued use of any non-Honda coolant can result in corrosion, causing the cooling system to malfunction or fail. Have the cooling system flushed and refilled with Honda antifreeze/coolant as soon as possible.

If the reserve tank is completely empty, you should also check the coolant level in the radiator.

⚠ WARNING

Removing the radiator cap while the engine is hot can cause the coolant to spray out, seriously scalding you.

Always let the engine and radiator cool down before removing the radiator cap.

CONTINUED

Engine Coolant, Windshield Washers

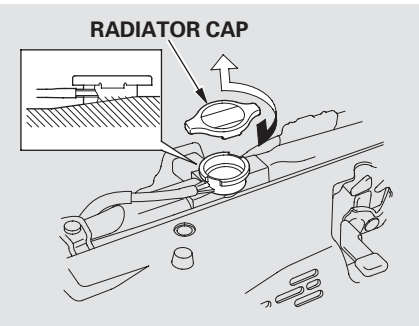

1. Make sure the engine and radiator are cool.

   When the radiator and engine are cool, relieve any pressure in the cooling system by turning the radiator cap counterclockwise, without pressing down.

2. Remove the radiator cap by pushing down and turning counterclockwise.

3. The coolant level should be up to the base of the filler neck. Add coolant if it is low.

   Pour the coolant slowly and carefully so you do not spill any. Clean up any spill immediately; it could damage components in the engine compartment.

4. Put the radiator cap back on, and tighten it fully.

5. Pour coolant into the reserve tank. Fill it to halfway between the MAX and MIN marks. Put the cap back on the reserve tank.

Do not add any rust inhibitors or other additives to your vehicle's cooling system. They may not be compatible with the coolant or engine components.

Windshield Washers
Check the fluid level in the windshield washer reservoir at least monthly during normal use.

On models without navigation system
The washer level indicator will come on when the level is low (see page 67).

On models with navigation system
If the washer fluid is low, a "WASHER FLUID LOW" message appears on the multi-information display.

Fill the reservoir with a good-quality windshield washer fluid. This increases the cleaning capability and prevents freezing in cold weather.

When you refill the reservoir, clean the edges of the windshield wiper blades with windshield washer fluid on a clean cloth. This will help to condition them.

NOTICE

Do not use engine antifreeze or a vinegar/water solution in the windshield washer reservoir. Antifreeze can damage your vehicle's paint, while a vinegar/water solution can damage the windshield washer pump. Use only commercially-available windshield washer fluid.

Automatic Transmission Fluid
The transmission should be drained and refilled with new fluid when this service is shown on the information display or multi-information display (depending on models).

Check the fluid level with the engine at normal operating temperature.

1. Park the vehicle on level ground. Start the engine, let it run until the radiator fan comes on, then shut off the engine. For accurate results, wait about 60 seconds (but no longer than 90 seconds) before doing step 2.

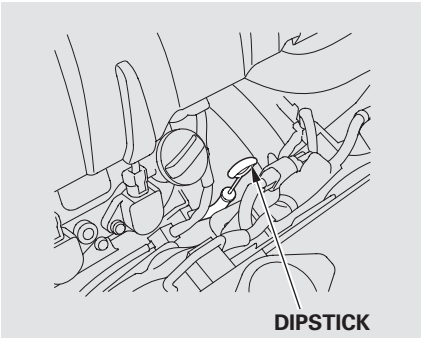

2. Remove the dipstick (yellow loop) from the transmission, and wipe it with a clean cloth.

CONTINUED

Automatic Transmission Fluid

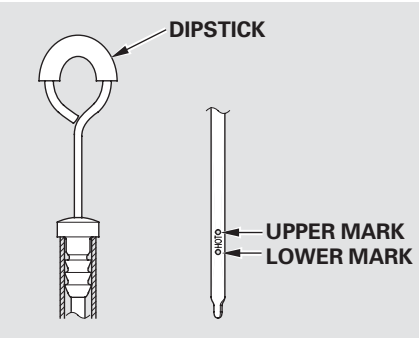

3. Insert the dipstick all the way into the transmission securely as shown in the illustration.

4. Remove the dipstick and check the fluid level. It should be between the upper and lower marks.

5. If the level is below the lower mark, remove the fill plug, then add the fluid into the fill hole to bring it to the level between the upper and lower marks on the dipstick.

Pour the fluid slowly and carefully so you do not spill any. Clean up any spill immediately; it could damage components in the engine compartment.

Always use Honda Genuine ATF-Z1 (automatic transmission fluid).

NOTICE

Use only Honda Genuine ATF-Z1 (automatic transmission fluid). Do not mix with other transmission fluids. Using transmission fluid other than Honda Genuine ATF-Z1 may cause deterioration in transmission operation and durability, and could result in damage to the transmission. Damage resulting from the use of transmission fluid other than Honda Genuine ATF-Z1 is not covered by the Honda new vehicle warranty.

6. Insert the dipstick all the way back in the transmission.

If you are not sure how to add fluid, contact your dealer.

Rear Differential Fluid, Transfer Assembly Fluid

Rear Differential Fluid
The rear differential should be drained and refilled with new fluid when this service is indicated by a maintenance message on the information display or multi-information display. This service may be needed more often under certain driving conditions (see page 324).

Always use Honda VTM-4 Differential Fluid, and have your dealer replace the rear differential fluid.

Transfer Assembly Fluid
The transfer assembly should be drained and refilled with new fluid when this service is indicated by a maintenance message on the information display or multi-information display.

Always use Hypoid gear oil GL4 or GL5 with a viscosity of SAE 90 or 80W-90, and have your dealer replace the transfer assembly fluid.

Brake Fluid

Check the fluid level in the brake fluid reservoir monthly.

Independent of the maintenance messages in the information display, replace the brake fluid every 3 years.

Always use Honda Heavy Duty Brake Fluid DOT 3. If it is not available, you should use only DOT 3 or DOT 4 fluid, from a sealed container, as a temporary replacement.

Using any non-Honda brake fluid can cause corrosion and decrease the life of the system. Have the brake system flushed and refilled with Honda Heavy Duty Brake Fluid DOT 3 as soon as possible.

Brake fluid marked DOT 5 is not compatible with your vehicle's braking system and can cause extensive damage.

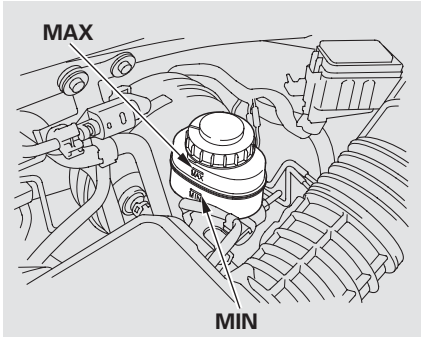

The fluid level should be between the MIN and MAX marks on the side of the reservoir. If the level is at or below the MIN mark, your brake system needs attention. Have the brake system inspected for leaks or worn brake pads.

Power Steering Fluid

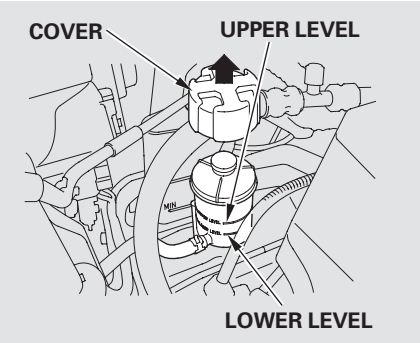

Remove the cover, then check the level on the side of the reservoir when the engine is cold.
The fluid should be between the UPPER LEVEL and LOWER LEVEL. If not, add power steering fluid to the UPPER LEVEL mark, and put the cover back in place.

Pour the fluid slowly and carefully so you do not spill any. Clean up any spill immediately; it could damage components in the engine compartment.

Always use Honda Power Steering Fluid. You may use another power steering fluid as an emergency replacement, but have the power steering system flushed and refilled with Honda PSF as soon as possible.

A low power steering fluid level can indicate a leak in the system. Check the fluid level frequently, and have the system inspected as soon as possible.

If you are not sure how to add fluid, contact your dealer.

NOTICE

Turning the steering wheel to full left or right lock and holding it there can damage the power steering pump.

Timing Belt, Lights

Timing Belt

The timing belt should be replaced at the intervals shown in the maintenance minder schedule.

Replace the timing belt every 60,000 miles (U.S.) or every 100,000 km (Canada) if you regularly drive your vehicle in any of the following conditions:

- In very high temperatures (over 110°F, 43°C).
- In very low temperatures (under −20°F, −29°C).
- Frequently towing a trailer.

Headlight Aiming

The headlights were properly aimed when your vehicle was new. If you regularly carry heavy items on the pickup bed or pull a trailer, readjustment may be required. Adjustments should be done by your dealer or other qualified technician.

Replacing a Headlight Bulb

Your vehicle has halogen headlight bulbs. When replacing a bulb, handle it by its base, and protect the glass from contact with your skin or hard objects. If you touch the glass, clean it with denatured alcohol and a clean cloth.

NOTICE

Halogen headlight bulbs get very hot when lit. Oil, perspiration, or a scratch on the glass can cause the bulb to overheat and shatter.

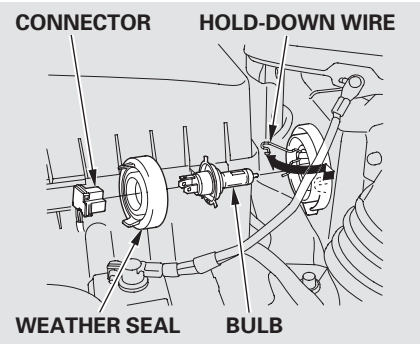

1. Remove the electrical connector from the bulb by pulling the connector straight back.

2. Remove the rubber weather seal by pulling on the tab.

3. Unclip the end of the hold-down wire from its slot. Pivot it out of the way, and remove the bulb.

4. Install the new bulb into the hole, making sure the tabs are in their slots. Pivot the hold-down wire back in place, and clip the end into the slot.

5. Install the rubber weather seal over the back of the headlight assembly. Make sure it is right side up.

6. Push the electrical connector onto the new bulb. Make sure it is connected securely. Turn on the headlights to test the new bulb.

Lights

Replacing a Front Turn Signal/ Hazard/Parking Light Bulb

1. To change the passenger's side bulb, start the engine, turn the steering wheel all the way to the left, and turn off the engine. To change the driver's side bulb, turn the steering wheel to the right.

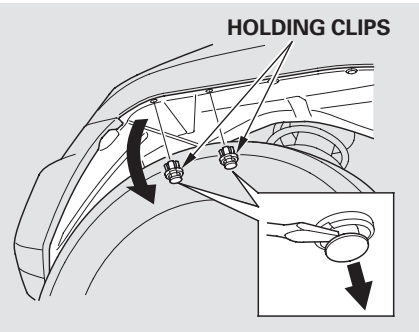

2. Use a flat-tip screwdriver to remove the two holding clips from the inner fender, and pull the inner fender cover back.

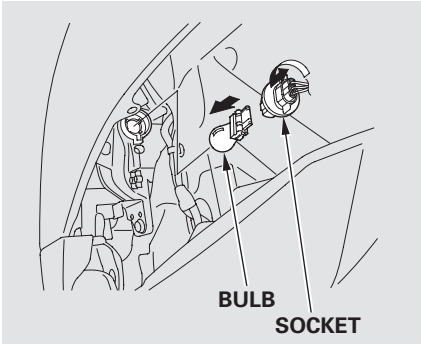

3. Remove the socket from the headlight assembly by turning it one-quarter turn counterclockwise.

4. Pull the bulb straight out of its socket. Push the new bulb straight into the socket until it bottoms.

5. Insert the socket back into the headlight assembly. Turn it clockwise to lock it in place.

6. Turn on the lights to make sure the new bulb is working.

7. Put the inner fender cover in place. Install and lock each holding clip by pushing on the center.

Replacing Front Fog/Daytime Running Light Bulbs

Your vehicle uses halogen light bulbs. When replacing a bulb, handle it by its plastic case, and protect the glass from contact with your skin or hard objects. If you touch the glass, clean it with denatured alcohol and a clean cloth.

NOTICE

Halogen bulbs get very hot when lit. Oil, perspiration, or a scratch on the glass can cause the bulb to overheat and shatter.

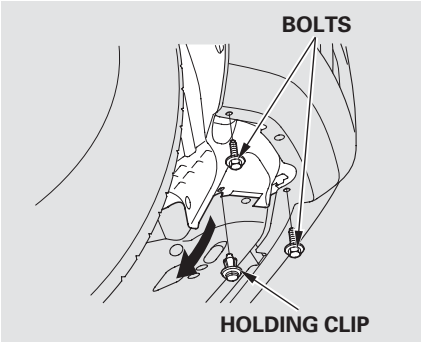

1. Remove the bolts and use the flat-tip screwdriver to remove the holding clip located under the front bumper.

2. Push down the inner fender.

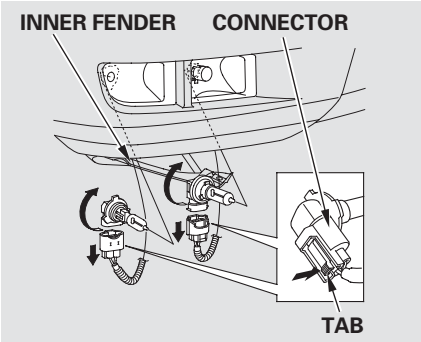

3. Remove the electrical connector from the bulb by pushing on the tab and pulling the connector down.

4. Remove the bulb from the fog light assembly by turning it one-quarter turn counterclockwise.

CONTINUED

Lights

5. Install the new bulb into the hole and turn it one-quarter turn clockwise to lock it in place.

6. Push the electrical connector back onto the bulb. Make sure it is on all the way.

7. Turn on the lights to test the new bulb.

8. Reinstall the inner fender. Make sure it is installed under the edge of the front bumper.

9. Reinstall the holding clip, and push in its head, then install the bolts and tighten them securely.

Replacing Rear Bulbs

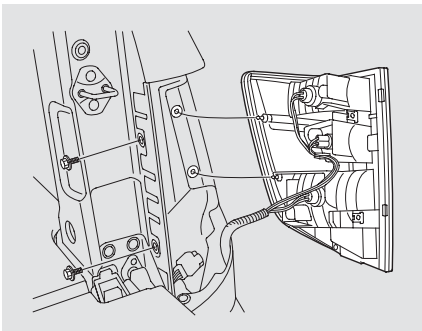

1. Drop open the tailgate.

2. Remove the two bolts, and remove the rear light assembly from the rear pillar.

3. Determine which of the three bulbs is burned out: brake/taillight, turn signal/hazard light, or back-up light.

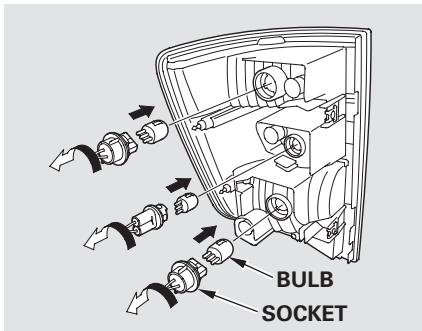

4. Remove the socket by turning it one-quarter turn counterclockwise.

5. Remove the burned-out bulb by pulling it straight out of the socket.

6. Install the new bulb into the socket.

7. Push the socket into the light assembly, and turn it clockwise until it locks.

8. Turn on the lights to make sure the new bulb is working.

9. Install the rear light assembly in the rear pillar. Tighten the two bolts securely.

Replacing a High-mount Brake Light Bulb

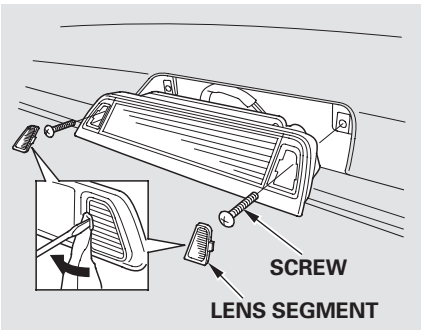

1. Place a cloth on the edge of the lens segment to prevent scratches. Remove each lens segment by carefully prying on its edge with a small flat-tip screwdriver.

2. Remove the screw under each lens.

3. Pull the high-mount brake light assembly out of the vehicle.

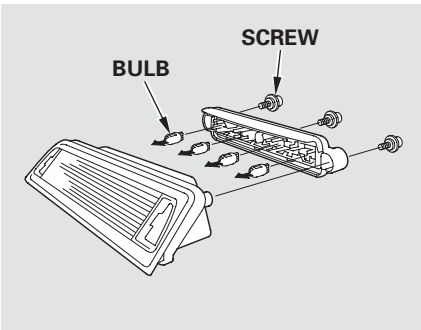

4. Remove the three mounting screws from the light assembly.

5. Remove the lens from the light assembly.

6. Pull the bulb straight out of its socket. Push the new bulb straight into the socket until it bottoms.

CONTINUED

7. Put the lens back on the light assembly, and tighten the mounting bolts securely.

8. Turn on the lights to make sure the new bulb is working.

9. Put the light assembly back into the vehicle. Install the screws and tighten them securely. Reinstall the lens segments.

Replacing a Rear License Plate Bulb

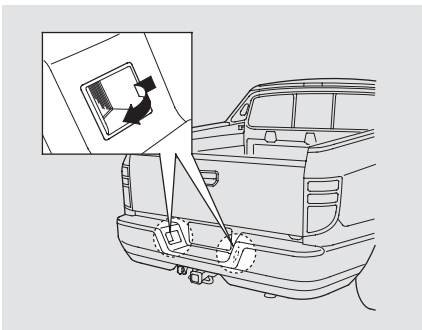

1. Remove the license plate light assembly by pulling it towards you, and then pulling the front edge upward.

2. Remove the socket from the light assembly by turning it one-quarter turn counterclockwise.

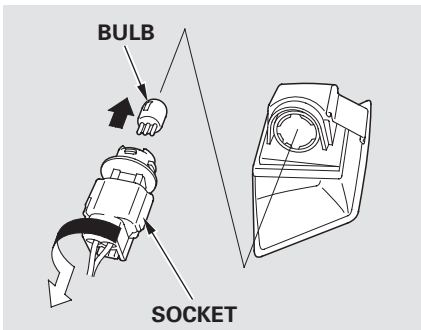

3. Pull the bulb straight out of its socket. Push the new bulb straight into the socket until it bottoms.

4. Push the socket into the light assembly, and turn it clockwise until it locks.

5. Turn on the lights to make sure the new bulb is working.

6. Reinstall the light assembly in the bumper.

Replacing a Bed Light Bulb

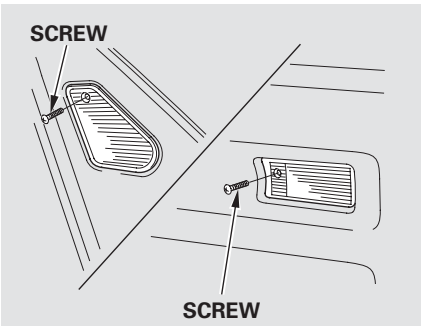

1. Remove the mounting screw from the bed light assembly.

2. Pull out the light assembly.

3. Remove the socket from the light assembly by turning it one-quarter turn counterclockwise.

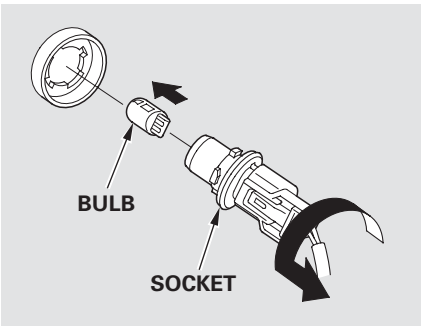

4. Pull the bulb straight out of its socket. Push the new bulb straight into the socket until it bottoms.

5. Push the socket into the light assembly, and turn it clockwise until it locks.

CONTINUED

Lights, Cleaning the Seat Belts

6. Reinstall the light assembly.

7. Turn on the lights to make sure the new bulb is working.

8. Reinstall the mounting screw, and tighten it securely.

Cleaning the Seat Belts

If your seat belts get dirty, use a soft brush with a mixture of mild soap and warm water to clean them. Do not use bleach, dye, or cleaning solvents. Let the belts air-dry before you use the vehicle.

Dirt build-up in the loops of the seat belt anchors can cause the belts to retract slowly. Wipe the insides of the loops with a clean cloth dampened in mild soap and warm water or isopropyl alcohol.

Floor Mats

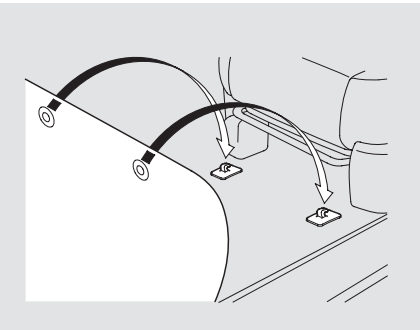

The floor mats that came with your vehicle hook over the floor mat anchors. This keeps the floor mats from sliding forward, possibly interfering with the pedals, or backwards, making the front passenger's weight sensors ineffective.

If you remove a floor mat, make sure to re-anchor it when you put it back in your vehicle.

A non-Honda floor mat may not fit your vehicle properly. This could prevent the proper operation of the folding rear seats and the passenger's seat weight sensors. We recommend using genuine Honda floor mats. Do not put additional floor mats on top of the anchored mats.

Dust and Pollen Filter

This filter removes the dust and pollen that is brought in from the outside through the heating and cooling system/climate control system.

Have your dealer replace the filter when this service is indicated by a maintenance message on the information display or multi-information display (depending on the models). It should be replaced every 15,000 miles (24,000 km) if you drive primarily in urban areas that have high concentrations of soot in the air, or if the flow from the heating and cooling system/climate control system becomes less than usual.

Wiper Blades

Check the condition of the wiper blades at least every six months. Replace them if you find signs of cracking in the rubber, areas that are getting hard, or if they leave streaks and unwiped areas when used.

To replace a wiper blade:

1. To raise the wiper arm, turn the ignition switch to the ON (II) position and activate the wipers (see page 94). When the wipers are in the upright position, turn the ignition switch off to stop the wipers in that position.

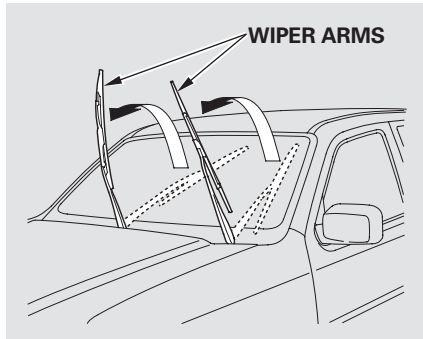

2. Raise the wiper arm off the windshield.

NOTICE

Do not open the hood when the wiper arms are raised, or you will damage the hood and the wiper arms.

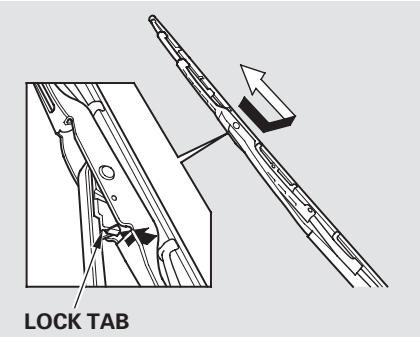

3. Disconnect the blade assembly from the wiper arm:
   - Press and hold the lock tab.
   - Slide the blade assembly toward the lock tab until it releases from the wiper arm.

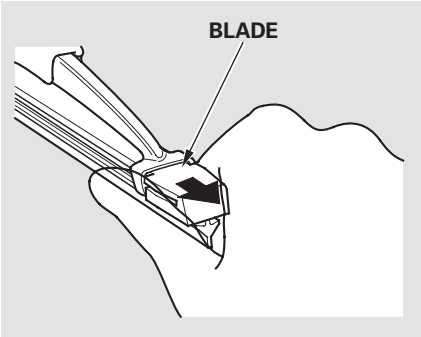

4. Remove the blade from its holder by grabbing the tabbed end of the blade. Pull up firmly until the tabs come out of the holder.

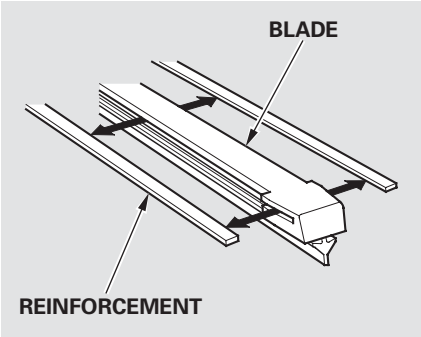

5. Examine the new wiper blades. If they have no plastic or metal reinforcement along the back edge, remove the metal reinforcement strips from the old wiper blade, and install them in the slots along the edge of the new blade.

CONTINUED

Wiper Blades, Wheels, Tires

6. Slide the new wiper blade into the holder until the tabs lock.

7. Slide the wiper blade assembly onto the wiper arm. Make sure it locks in place.

8. Lower the wiper arm against the window.

9. Turn the ignition switch to the ON (II) position, and turn the wiper switch off to return the wiper arms to the parked position.

Wheels
Clean the wheels as you would the rest of the exterior. Wash them with the same solution, and rinse them thoroughly.

If equipped
Aluminum alloy wheels have a protective clear-coat that keeps the aluminum from corroding and tarnishing. Cleaning the wheels with harsh chemicals (including some commercial wheel cleaners) or a stiff brush can damage the clear-coat. To clean the wheels, use a mild detergent and a soft brush or sponge.

Tires
To safely operate your vehicle, your tires must be the proper type and size, in good condition with adequate tread, and correctly inflated.

The following pages give more detailed information on how to take care of your tires and what to do when they need to be replaced.

⚠ WARNING

Using tires that are excessively worn or improperly inflated can cause a crash in which you can be seriously hurt or killed.

Follow all instructions in this owner's manual regarding tire inflation and maintenance.

Inflation Guidelines
Keeping the tires properly inflated provides the best combination of handling, tread life, and riding comfort.

- Underinflated tires wear unevenly, adversely affect handling and fuel economy, and are more likely to fail from being overheated.

- Overinflated tires can make your vehicle ride more harshly, are more prone to damage from road hazards, and wear unevenly.

The tire pressure monitoring system (TPMS) warns you when a tire pressure is low. See page 278 or 281 for more information.

Even though your vehicle is equipped with TPMS, we recommend that you visually check your tires every day. If you think a tire might be low, check it immediately with a tire gauge.

Use a gauge to measure the air pressure in each tire at least once a month. Even tires that are in good condition may lose 1 to 2 psi (10 to 20 kPa, 0.1 to 0.2 kgf/cm²) per month. Remember to check the spare tire at the same time.

Check the air pressures when the tires are cold. This means the vehicle has been parked for at least 3 hours, or driven less than 1 mile (1.6 km). Add or release air, if needed, to match the recommended cold tire pressures on page 350 .

If you check air pressures when the tires are hot (driven for several miles/kilometers), you will see readings 4 to 6 psi (30 to 40 kPa, 0.3 to 0.4 kgf/cm²) higher than the cold readings. This is normal. Do not let air out to match the recommended cold air pressure. The tire will be underinflated.

You should get your own tire pressure gauge and use it whenever you check your tire pressures. This will make it easier for you to tell if a pressure loss is due to a tire problem and not due to a variation between gauges.

While tubeless tires have some ability to self-seal if they are punctured, you should look closely for punctures if a tire starts losing pressure.

CONTINUED

Tires

Never use a puncture-repairing agent in a flat tire. If used, you will have to replace the tire pressure sensor. Have the flat tire repaired by your dealer as soon as possible.

Recommended Tire Pressures
The following chart shows the recommended cold tire pressures for most normal and high-speed driving conditions.

RT, RTS models, and Canadian DX, VP models

Tire Size	Cold Tire Pressure
P245/65R17 105T	Front/Rear: 32 psi (220 kPa , 2.2 kgf/cm²)

RTL models, and Canadian EX-L models

Tire Size	Cold Tire Pressure
P245/60R18 104T	Front/Rear: 32 psi (220 kPa , 2.2 kgf/cm²)

The compact spare tire pressure is: 60 psi (420 kPa , 4.2 kgf/cm²)

For convenience, the recommended tire sizes and cold tire pressures are on a label on the driver's doorjamb.

For additional information about your tires, see page 392 .

Tire Inspection
Every time you check inflation, you should also examine the tires for damage, foreign objects, and wear.

You should look for:
- Bumps or bulges in the tread or side of the tire. Replace the tire if you find either of these conditions.
- Cuts, splits, or cracks in the side of the tire. Replace the tire if you can see fabric or cord.
- Excessive tread wear.

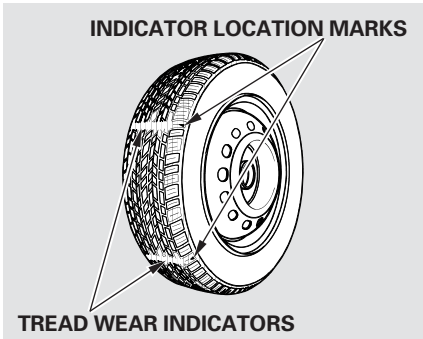

Your tires have wear indicators molded into the tread. When the tread wears down, you will see a 1/2 inch (12.7 mm) wide band across the tread. This shows there is less than 1/16 inch (1.6 mm) of tread left on the tire.

A tire this worn gives very little traction on wet roads. You should replace the tire if you can see three or more tread wear indicators.

Tire Service Life

The service life of your tires is dependent on many factors, including, but not limited to, driving habits, road conditions, vehicle loading, inflation pressure, maintenance history, speed, and environmental conditions (even when the tires are not in use).

In addition to your regular inspections and inflation pressure maintenance, it is recommended that you have annual inspections performed once the tires reach five years old. It is also recommended that all tires, including the spare, be removed from service after 10 years from the date of manufacture, regardless of their condition or state of wear.
The last four digits of the TIN (tire identification number) are found on the sidewall of the tire and indicate the date of manufacture (See **Tire Labeling** on page 392).

Tire Maintenance

In addition to proper inflation, correct wheel alignment helps to decrease tire wear. If you find a tire is worn unevenly, have your dealer check the wheel alignment.

Have your dealer check the tires if you feel a consistent vibration while driving. A tire should always be rebalanced if it is removed from the wheel. When you have new tires installed, make sure they are balanced. This increases riding comfort and tire life. For best results, have the installer perform a dynamic balance.

NOTICE

On vehicles with aluminum wheels, improper wheel weights can damage your vehicle's aluminum wheels. Use only Honda wheel weights for balancing.

Tire Rotation

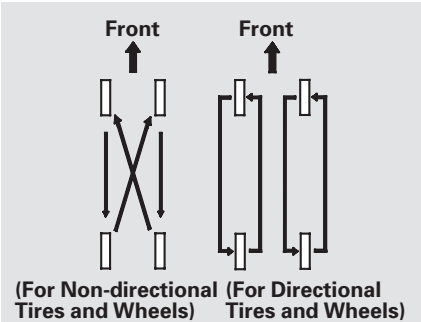

To help increase tire life and distribute wear more evenly, rotate the tires according to the maintenance messages displayed on the information display or multi-information display (depending on models). Move the tires to the positions shown in the diagram each time they are rotated. If you purchase directional tires, rotate only front-to-back.

Tires

Replacing Tires and Wheels
Replace your tires with radial tires of the same size, load range, speed rating, and maximum cold tire pressure rating (as shown on the tire's sidewall).

Mixing radial and bias-ply tires on your vehicle can reduce braking ability, traction, and steering accuracy. Using tires of a different size or construction can cause the ABS and vehicle stability assist system (VSA) to work inconsistently.

The ABS and VSA system work by comparing the speed of the wheels. When replacing tires, use the same size originally supplied with the vehicle. Tire size and construction can affect wheel speed and may cause the ABS or VSA system to activate.

It is best to replace all four tires at the same time. If that is not possible or necessary, replace the two front tires or two rear tires as a pair. Replacing just one tire can seriously affect your vehicle's handling.

If you ever replace a wheel, make sure that the wheel's specifications match those of the original wheels.

Also be sure you use only TPMS specific wheels. If you do not, the tire pressure monitoring system will not work.

Replacement wheels are available at your dealer.

⚠ WARNING

Installing improper tires on your vehicle can affect handling and stability. This can cause a crash in which you can be seriously hurt or killed.

Always use the size and type of tires recommended in this owner's manual.

Wheel and Tire Specifications

Wheels:

RT, RTS models, and Canadian DX, VP models

17 x 7 1/2J

RTL models, and Canadian EX-L models

18 x 7 1/2J

Tires:

RT, RTS models, and Canadian DX, VP models

P245/65R17 105T

RTL models, and Canadian EX-L models

P245/60R18 104T

See page 390 for DOT tire quality grading information, and page 392 for tire size information.

Winter Driving

Tires marked “M + S” or “All Season” on the sidewall have an all-weather tread design suitable for most winter driving conditions.

For the best performance in snowy or icy conditions, you should install snow tires or tire chains. They may be required by local laws under certain conditions.

Snow Tires

If you mount snow tires on your vehicle, make sure they are radial tires of the same size and load range as the original tires. Mount snow tires on all four wheels. The traction provided by snow tires on dry roads may be lower than your original tires. Check with the tire dealer for maximum speed recommendations.

Tires

Tire Chains
Mount tire chains on your tires when required by driving conditions or local laws. Install them only on the front tires.

Because your vehicle has limited tire clearance, Honda strongly recommends using the chains listed below.

On RT, RTS models, and Canadian DX, VP models
Premium Cobra Cable Chain
1046P with accessory adjusters

On RTL models, and Canadian EX-L models
SCC Super Z-6# SZ-435

When installing chains, follow the manufacturer's instructions and mount them as tightly as you can. Drive slowly with chains installed. If you hear them contacting the body or chassis, stop and investigate. Make sure the chains are installed tightly, and that they are not contacting the brake lines or suspension. Remove the chains as soon as you start driving on cleared roads.

Premium Cobra Cable Chain # 1046P with accessory adjusters*

On RT, RTS models, and Canadian DX, VP models
This tire chain is available at many auto supply stores. To find a local store that carries the chain, call Quality Chain Corp at 1-800-843-8824. To order the tire chain online, go to *www.chainquest.com*, and enter your vehicle information. When you install the chains, follow the manufacturer's instructions, and mount them as tightly as you can. Drive slowly with the chains installed.

*: Rubber chain adjusters, or tensioners, must be used to prevent the chains from contacting the body or the chassis.

⚠ WARNING

Using the wrong chains, or not properly installing chains, can damage the brake lines and cause a crash in which you can be seriously injured or killed.

Follow all instructions in this owner's manual regarding the selection and use of tire chains.

If you ever hear the chains contacting the body or chassis, stop and investigate. If the chains have loosened, retighten them. Make sure they do not contact the brake lines or suspension.

Remove the chains as soon as you begin driving on cleared roads.

NOTICE

Traction devices that are the wrong size or improperly installed can damage your vehicle's brake lines, suspension, body, and wheels. Stop driving if they are hitting any part of the vehicle.

Checking the Battery

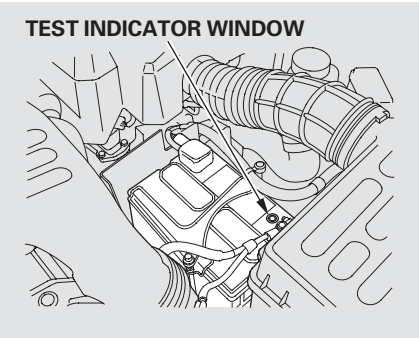

Check the condition of the battery monthly by looking at the test indicator window. The label on the battery explains the test indicator's colors.

Check the terminals for corrosion (a white or yellowish powder). To remove it, cover the terminals with a solution of baking soda and water. It will bubble up and turn brown. When this stops, wash it off with plain water. Dry off the battery with a cloth or paper towel. Coat the terminals with grease to help prevent future corrosion.

If additional battery maintenance is needed, see your dealer or a qualified technician.

WARNING: Battery posts, terminals, and related accessories contain lead and lead compounds. **Wash your hands after handling.**

If you need to connect the battery to a charger, disconnect both cables to prevent damaging your vehicle's electrical system. Always disconnect the negative (−) cable first, and reconnect it last.

⚠ WARNING

The battery gives off explosive hydrogen gas during normal operation.

A spark or flame can cause the battery to explode with enough force to kill or seriously hurt you.

Wear protective clothing and a face shield, or have a skilled technician do the battery maintenance.

On models without navigation system
If your vehicle's battery is disconnected, or goes dead, the time setting may be lost. To reset the time, see page 207.

If your vehicle's battery is disconnected or goes dead, the audio system may disable itself. The next time you turn on the radio you will see "CODE" in the frequency display. Use the preset bars to enter the code (see page 206).

On models with navigation system
The navigation system will also disable itself. The next time you turn on the ignition switch, the system will require you to enter a PIN before it can be used. Refer to the navigation system manual.

Vehicle Storage
If you need to park your vehicle for an extended period (more than 1 month), there are several things you should do to prepare it for storage. Proper preparation helps prevent deterioration and makes it easier to get your vehicle back on the road. If possible, store your vehicle indoors.

- Fill the fuel tank.
- Wash and dry the exterior completely.
- Clean the interior. Make sure the carpeting, floor mats, etc., are completely dry.
- Leave the parking brake off. Put the transmission in Park.
- Block the rear wheels.
- If the vehicle is to be stored for a longer period, it should be supported on jackstands so the tires are off the ground.
- Leave one window open slightly (if the vehicle is being stored indoors).
- Disconnect the battery.
- Support the front wiper blade arms with a folded towel or rag so they do not touch the windshield.
- To minimize sticking, apply a silicone spray lubricant to all door, In-Bed Trunk lid, and tailgate seals. Also, apply a vehicle body wax to the painted surfaces that mate with the door, In-Bed Trunk lid and tailgate seals.

CONTINUED

Vehicle Storage

- Cover the vehicle with a “breathable” cover, one made from a porous material such as cotton. Non-porous materials, such as plastic sheeting, trap moisture, which can damage the paint.

- If possible, periodically run the engine until it reaches full operating temperature (the cooling fans cycle on and off twice). Preferably, do this once a month.

A

Accessories and Modifications 257
ACCESSORY (Ignition Key Position) 102
Accessory Power Sockets..... 139
AC Power Outlet..... 141
Active Head Restraints 124
Additives, Engine Oil..... 327
Adjusting the Steering wheel..... 99
Advanced Airbags..... 27
Airbag (SRS) 9, 23
Air Conditioning System..... 146
  Usage 147, 153
Air Outlets (Vents)..... 148, 151, 155, 156
Air Pressure, Tires 350
Antifreeze 329
Anti-lock Brakes (ABS)
  Indicator..... 66, 289
  Operation 289
Anti-theft, Audio System..... 206
Anti-theft Steering Column Lock..... 102
Armrests 122
Audio System 159, 167, 173
Auto Door Locking/Unlocking.... 104
Automatic Heated Wiper Zone..... 95, 150, 156
Automatic Seat Belt Tensioners 21
Automatic Speed Control..... 210
Automatic Transmission..... 271
  Capacity, Fluid 388
  Checking Fluid Level 331
  Shifting..... 271
  Shift Lever Position Indicators..... 271
  Shift Lever Positions 272
  Shift Lock Release..... 275
Auxiliary Input Jack..... 205

B

Back Window
  Indicator..... 75
  Operation..... 128, 129
Battery
  Charging System Indicator..... 63, 374
  Jump Starting 370
  Maintenance..... 356
  Specifications 389
Bed Lights
  Indicator..... 74
  Operation 144
Before Driving 247
Belts, Seat 8, 20
Beverage Holders..... 137
Bluetooth® HandsFreeLink® 221
Booster Seats 52
Brakes
  Anti-lock System (ABS) 289
  Break-in, New Linings 248
  Fluid 334
  Bulb Replacement 340, 341
  Parking..... 132
  System Indicator..... 65, 376
  Wear Indicators 288
Braking System..... 288
Break-in, New Vehicle 248
Brightness Control, Instruments... 98

CONTINUED

Index

Bulb Replacement
- Back-up Lights 340
- Brake Lights..... 340
- Bed Lights 343
- Daytime Running Lights 339
- Fog Lights 339
- Front Turn Signal /Parking/ Hazard Lights 338
- Headlights 336
- High-mount Brake Light 341
- License Plate Lights..... 342
- Rear Bulbs (Brake/Taillights, Turn Signal/Hazard Lights, Back-up Lights) 340
- Specifications 389

Bulbs, Halogen..... 336, 339

C

Capacities Chart 388, 389
Carbon Monoxide Hazard 55
Cargo Hooks 118, 137
Carrying Cargo 259
CAUTION, Explanation of iii
CD Care 198
CD Changer 181, 189
CD Player/Changer Error Messages..... 202
CD Player..... 175
Certification Label..... 386
Chains, tire 354
Change Oil
- How to 327
- When to..... 313

Changing a Flat Tire 361
Charging System Indicator 63, 374
Checklist, Before Driving..... 269
Childproof Door Locks 104
Child Safety 34
- Booster Seats 52
- Child Seats..... 41
- Important Safety Reminders..... 34
- Infants 39
- Larger Children 51
- LATCH..... 43
- Risks with Airbags..... 35
- Small Children..... 40
- Tether 43, 48
- Where Should a Child Sit?..... 35

Child Seats..... 41
- LATCH..... 43
- Tether Anchorage Points 48

Climate Control System..... 152
Clock 207
Coat Hooks 138
Code, Audio System 206
CO in the Exhaust 397
Compact Spare Tire..... 360
Compass..... 213
Console Compartment 136
Consumer Information..... 404
Controls, Instruments and..... 59
Coolant
- Adding..... 329
- Checking..... 253
- Proper Solution 329
- Temperature Gauge 76

Courtesy Light 143
Crankcase Emissions Control System..... 397
Cruise Control
- Indicator..... 67
- Operation 210

Cup Holders..... 137
Customer Service 404

D

DANGER, Explanation of iii
Dashboard 3, 60
Daytime Running Lights..... 97
Dead Battery 370
Defects, Reporting Safety* 406
Defrosting the Windows..... 150, 155
Differential Fluid, Rear 333
Dimensions..... 388
Dimming the Headlights 95
Dipstick
  Automatic Transmission..... 331
  Engine Oil..... 253
Directional Signals..... 95
Disc Brake Wear Indicators..... 288
Disposal of Used Oil..... 328
Door and Tailgate Open Monitor .. 11
Doors
  Locking and
    Unlocking 103, 104, 107
  Lockout Prevention 103
  Power Door Locks..... 103
DOT Tire Quality Grading* 390
Driver and Passenger Safety..... 5
Driving 267
  Economy 254
D3 273
Dual-Action Tailgate
  Indicator..... 11, 115
  Operation 113
Dust and Pollen Filter 345

E

Economy, Fuel 254
Emergencies..... 359
  Battery, Jump Starting 370
  Brake System Indicator 376
  Changing a Flat Tire 361
  Charging System Indicator 374
  Checking the Fuses..... 378
  Hazard Warning Flashers 99
  Low Oil Pressure Indicator 374
  Malfunction Indicator Lamp 375
  Overheated Engine 372
  Stuck Vehicle 383
  Towing 383
Emergency Brake..... 132
Emissions Controls..... 397
Emissions Testing 400
Engine
  Coolant Temperature Gauge 76
  Malfunction Indicator
    Lamp 63, 375
  Oil Life Display 313, 317
  Oil Pressure Indicator..... 63, 374
  Oil, What Kind to Use 326
  Overheating..... 372
  Specifications 389
  Speed Limiter 275
  Starting..... 270
Engine, if it won't start..... 369
Evaporative Emissions Control
  System..... 397
Exhaust Fumes 55
Exhaust Gas Recirculation
  System..... 398
Expectant Mothers, Use of Seat
  Belts by 18

F

Fan, Interior 147, 154
Features 145

CONTINUED

Filling the Fuel Tank..... 249
Filters
Dust and Pollen..... 345
Oil 328
Flashers, Hazard Warning..... 99
Flat Tire, Changing a 361
Floor Mats 345
Fluids
Automatic Transmission..... 331
Brake..... 334
Power Steering..... 335
Rear Differential..... 333
Transfer Assembly..... 333
Windshield Washer..... 330
FM Stereo Radio
Reception..... 165
Folding the Rear Seats..... 125
Fog Lights..... 97
Four-way Flashers 99
Front Seat 119, 121
Adjusting..... 119, 121
Airbags..... 9, 25
Heaters..... 126
Fuel..... 248
Fill Door and Cap..... 249
Gauge 76
Octane Requirement..... 248
Oxygenated 248
Reserve Indicator..... 68
Tank, Filling the..... 249
Fuel Economy 254
Actual Mileage and EPA Fuel
Economy Estimates
Comparison 254
Calculating Fuel Economy 256
Fuel Economy Factors..... 255
Improving Fuel Economy 255
Fuses, Checking the..... 378

G

Gas Mileage, Improving..... 254
Gasoline
Fuel Reserve Indicator..... 68
Gauge 76
Octane Requirement..... 248
Tank, Filling the..... 249
Gas Station Procedures..... 249
Gauges
Engine Coolant Temperature 76
Fuel..... 76
Speedometer 76
Tachometer 76
GAWR (Gross Axle Weight
Rating) 294
GCWR (Gross Combined Weight
Rating) 294
Gearshift Lever Positions..... 272
Glove Box 138
GVWR (Gross Vehicle Weight
Rating) 294

H

Halogen Headlight Bulbs 336, 339
HandsFreeLink®..... 221
HFL Buttons..... 221
Hazard Warning Flashers..... 99

Headlights 94, 95
Aiming..... 336
Automatic Lighting Off..... 96
Control Dial 95
Daytime Running Lights..... 97
High Beam Indicator..... 67
High Beams, Turning on 94, 95
Low Beams, Turning on 95
Reminder Chime..... 96
Replacing Halogen Bulbs 336, 339
Turning On..... 95
Head Restraints 122
Heated Mirrors 134
Heaters, Seats 126
Heating and Cooling..... 147, 153
High-Low Beam Switch 94
HomeLink® Universal Transceiver..... 217
Hood, Opening the 252
Horn..... 4, 93

I

Identification Number, Vehicle.... 386
Ignition
Keys..... 100
Switch..... 102
Timing Control System..... 398
Immobilizer System..... 101
Important Safety Precautions 6
In-Bed Trunk® 116
Emergency Opener 117
Open Indicator 75
Indicators, Instrument Panel..... 61
ABS (Anti-lock Brake) 66
A/T Temperature..... 69
Back Window Open..... 75
Bed Lights On..... 74
Brake (Parking and Brake System) 65
Charging System 63
Cruise Control..... 67
Cruise Main..... 67
Door Open 75
DRL (Daytime Running Lights)..... 67
High Beam..... 67
In-Bed Trunk Open 75
Key (Immobilizer System) 66
Lights On..... 69
Low Fuel 68
Low Oil Pressure 63
Low Tire Pressure..... 72
Maintenance Minder..... 71
Malfunction Indicator Lamp (MIL) 63
Side Airbag Off 64
Seat Belt..... 62
Security System 68
SRS 64
Tailgate Open..... 75
TPMS System 72, 73
Turn Signal and Hazard Warning 66
VSA Activation..... 71
VSA System..... 70
VTM-4 70
Washer Level 67
Individual Map Lights 143
Infant Restraint..... 39
Infant Seats..... 39
Inflation, Proper Tire 349

CONTINUED

Information Display 77
Engine Oil Life Indicator 313
Maintenance Items..... 316, 324
Inside Mirror 133
Inspection, Tire 350
Instrument Panel 4, 93
Instrument Panel Brightness 98
Interior Lights 142
Introduction i

J

Jacking Up the Vehicle 363
Jack, Tire 363
Jump Starting 370

K

Keys..... 100

L

Label, Certification 386
Lane Change, Signaling 95
Lap/Shoulder Belts 16, 21
Light Control Dial..... 95
Lights
Bulb Replacement 336
Indicator..... 69
Interior 142
Parking..... 95
Turn Signal 95
Load Limits..... 260, 293
LOCK (Ignition Key Position) 102
Locks
Anti-theft Steering Column 102
Fuel Fill Door 249
Glove Box 138
In-Bed Trunk® 116
Lockout Prevention 103
Power Door 103
Low Coolant Level..... 253
Low Fuel Indicator 68
Low Oil Pressure Indicator 63, 374
Lubricant Specifications
Chart 388, 389
Luggage, Storing (Cargo) 259

M

Maintenance..... 311
Owner's Maintenance
Checks 323
Minder 313-324
Minder Indicator..... 71
Safety..... 312
Malfunction Indicator Lamp .. 63, 375
Manual Seat Adjustments..... 119
Meters, Gauges..... 76
Mirrors, Adjusting 134
Modifying Your Vehicle..... 258
Moonroof 131
Multi-Information Display 82
Engine Oil Life Display..... 317
Maintenance Items..... 321, 324

N

Neutral Gear Position..... 273
New Vehicle Break-in 248
NOTICE, Explanation of..... i
Numbers, Identification 386

O

Octane Requirement, Gasoline 248
Odometer 76
Off-Highway Driving 306
Off-Road Precautions 307
Oil
  Change, How to 327
  Change, When to 313
  Checking Engine 253
  Filter 328
  Pressure Indicator 63, 374
  Selecting Proper Viscosity
    Chart 326
ON (Ignition Key Position) 102
Outside Mirrors 134
Overheating, Engine 372
Owner's Maintenance Checks 323
Oxygenated Fuels 248

P

Panel Brightness Control 98
Park Gear Position 272
Parking 286
Parking Brake 132
Parking Lights 95
Parking Over Things that Burn ... 287
PGM-FI System 398
Pickup Bed
  Carrying Cargo 259
  Lights 144
Power Seat Adjustments 121
Power Socket Locations 139
Pregnancy, Using Seat Belts 18
Protecting Adults and Teens 11
  Additional Safety Precautions 19
  Advice for Pregnant Women 18
Protecting Children 34
  General Guidelines 34
  Protecting Infants 39
  Protecting Larger Children 51
  Protecting Small Children 40
  Using Child Seats with
    Tethers 48
  Using LATCH 43

R

Radiator Overheating 372
Radio/CD Sound
  System 159, 167, 173
Rear Differential Fluid 333
Rear Lights, Bulb Replacement ... 340
Rearview Mirror 133
Rearview Mirror with Compass ... 213
Rear (Back) Window 129
Reclining the Seat-Backs 120, 121
Remote Audio Controls 203
Remote Transmitter 110
Replacement Information
  Engine Oil and Filter 327
  Fuses 378
  Light Bulbs 336
  Minder 324
  Timing Belt 336
  Tires 361
  Wiper Blades 346
Replacing Seat Belts After a
  Crash 22
Reserve Tank, Engine Coolant 253
Reverse Gear Position 272
Rotation, Tire 351

CONTINUED

S

Safety Belts 8, 20
Safety Defects, Reporting* 406
Safety Features 7
  Airbags 9
  Door Locks 11
  Head Restraints 15
  Seat Belts 8, 20
  Seats and Seat-Backs 13, 14
Safety Labels, Location of 56
Safety Messages iii
Seat Belts 8, 20
  Additional Information 20
  Automatic Seat Belt Tensioners 21
  Cleaning 344
  Lap/Shoulder Belt 21
  Maintenance 22
  Reminder Light and Beeper 20, 62
  System Components 20
  Use During Pregnancy 18
  Wearing a Lap/Shoulder Belt 16
Seating Capacities 388
Seats 119
  Adjusting the Seat 119, 121
  Folding the Rear Seats 125
  Head Restraints 122
  Heater 126
Security System 208
Serial Number 386
Service Intervals 324
Service Manual, Purchasing* 407
Service Station Procedures 249
Shifting the Automatic Transmission 271
Shift Lever Position Indicators 271
Shift Lock Release 275
Side Airbags 9, 28
Side Curtain Airbags 10, 30
Side Marker (Parking) Lights, Bulb Replacement in 338
Signaling Turns 95
Snow Tires 353
Sound System 159, 167, 173
Spare Tire
  Inflating 350, 360
  Specifications 353, 389
Specifications Charts 388
Speed Control 210
Speedometer 76
SRS, Additional Information 23
  Additional Safety Precautions 33
  Airbag System Components 23
  Airbag Service 32
  How the Passenger Airbag Off Indicator Works 31
  How the Side Airbag Off Indicator Works 31
  How the SRS Indicator Works 30
  How Your Front Airbags Work 25
  How Your Side Airbags Work 28
  How Your Side Curtain Airbags Work 30
SRS Indicator 30, 64
START (Ignition Key Position) 102
Starting the Engine 270
  With a Dead Battery 370
Steam Coming from Engine 372
Steering Wheel
  Adjustment 99
  Anti-theft Column Lock 102
Stereo Sound System 159, 167, 173
Storing Your Vehicle 357
Stuck Vehicle 383

Sun Visor 140
Sunglasses Holder 138
Supplemental Restraint System (SRS)
  Servicing 32
  SRS Indicator 30, 64
  System Components 23
Synthetic Oil 327

T

Tachometer 76
Tailgate, Dual-Action
  Indicator 11, 115
  Operation 113
Taillights, Changing Bulbs in 340
Taking Care of the Unexpected .. 359
Technical Descriptions
  DOT Tire Quality Grading* 390
  Emissions Control Systems 397
  Three Way Catalytic Converter 399
Temperature Gauge 76
Tensioners, Seat Belts 21
Theft Protection 206
Three Way Catalytic Converter ... 399
Timing Belt 336
Tire Chains 354
Tire, How to Change a Flat 361
Tire Labeling 392
Tire Pressure Monitoring System (TPMS) 278
  Low Tire Pressure Indicator 72, 278
  Required Federal Explanation 394
  Tire Pressure Monitor 279
  TPMS Indicator 72, 73, 279, 281
Tires 348
  Air Pressure 350
  Checking Wear 350
  Compact Spare 360
  DOT Tire Quality Grading* 390
  Inflation 349
  Inspection 350
  Maintenance 351
  Replacing 352
  Rotating 351
  Snow 353
  Specifications 353, 389
  Tire Chains 354
Tools, Tire Changing 361
Towing
  A Trailer 296
  Emergency Wrecker 383
  Equipment 301
  Equipment and Accessories 297
  Weight Limit 293
  Trailer Loading 295
  Trailer Towing Tips 303
Transfer Assembly Fluid 333
Transmission
  Checking Fluid Level 331
  Fluid Selection 332
  Identification Number 387
  Shifting the Automatic 271
Treadwear 390
Trip Meter 79, 84
Trunk, In-Bed 116
Turn Signals 95

U

Unexpected, Taking Care of the 359
Uniform Tire Quality Grading* ... 390

CONTINUED

Unleaded Gasoline..... 248
Used Oil, How to Dispose of 328

V

Vanity Mirror 140
Vehicle Capacity Load 260, 388
Vehicle Dimensions..... 388
Vehicle Identification Number..... 386
Vehicle Stability Assist (VSA®), aka Electronic Stability Control (ESC), System 291
VSA Activation Indicator 71, 291
VSA Off Switch 292
VSA System Indicator 70, 291
Vehicle Storage 357
Ventilation 149
VIN 386
Viscosity, Oil..... 326
Variable Torque Management® 4-wheel drive system (VTM-4®) 276
VTM-4 Lock 276

W

WARNING, Explanation of iii
Warning Labels, Location of 56
Warranty Coverages* 405
Washer, Windshield
Checking the Fluid Level 330
Level Indicator 67
Operation 94
Wheels 348
Adjusting the Steering 99
Wrench 364
Windows
Operating the Power 128
Windshield
Defroster 148, 155
Washers 94
Wiper Zone, Heated 95, 150, 156
Wipers, Windshield
Changing Blades..... 346
Operation 94
Worn Tires 350
Wrecker, Emergency Towing..... 383

X

XM® Radio 167

*: U.S. only

Owner's Identification

OWNER _____

_____

ADDRESS _____
STREET

_____ _____ _____
CITY STATE/PROVINCE/TERRITORY ZIP CODE/ POSTAL CODE

V. I. N. _____

DELIVERY DATE _____
(Date sold to original retail purchaser)

DEALER NAME _____ DEALER NO. _____

ADDRESS _____
STREET

_____ _____ _____
CITY STATE/PROVINCE/TERRITORY ZIP CODE/ POSTAL CODE

OWNER'S SIGNATURE _____

DEALER'S SIGNATURE _____

This owner's manual should be considered a permanent part of the vehicle and should remain with the vehicle when it is sold.

This owner's manual covers all models of the Ridgeline. You may find descriptions of equipment and features that are not on your particular model.

The information and specifications included in this publication were in effect at the time of approval for printing. Honda Motor Co., Ltd. reserves the right, however, to discontinue or change specifications or design at any time without notice and without incurring any obligation whatsoever.

POUR CLIENTS CANADIEN
AVIS IMPORTANT: Si vous avez besoin d'un Manuel du Conducteur en français, veuillez demander à votre concessionnaire de commander le numéro de pièce 33SJCC40

Congratulations! Your selection of a 2010 Honda Ridgeline was a wise investment. It will give you years of driving pleasure.

One of the best ways to enhance the enjoyment of your new vehicle is to read this manual. In it, you will learn how to operate its driving controls and convenience items. Afterwards, keep this owner's manual in your vehicle so you can refer to it at any time.

Several warranties protect your new vehicle. Read the warranty booklet thoroughly so you understand the coverages and are aware of your rights and responsibilities.

Maintaining your vehicle according to the maintenance minder shown in the instrument panel helps to keep your driving trouble-free while it preserves your investment. When your vehicle needs maintenance, keep in mind that your dealer's staff is specially trained in servicing the many systems unique to your vehicle. Your dealer is dedicated to your satisfaction and will be pleased to answer any questions and concerns.

As you read this manual, you will find information that is preceded by a NOTICE symbol. This information is intended to help you avoid damage to your vehicle, other property, or the environment.

California Proposition 65 Warning

WARNING: This product contains or emits chemicals known to the State of California to cause cancer and birth defects or other reproductive harm.

Event Data Recorders

This vehicle is equipped with one or more devices commonly referred to as event data recorders. These devices record front seat belt use, front passenger seat occupancy, airbag deployment data, and the failure of any airbag system component. This data belongs to the vehicle owner and may not be accessed by anyone else except as legally required or with the permission of the vehicle owner.

Service Diagnostic Recorders

This vehicle is equipped with service-related devices that record information about powertrain performance. The data can be used to verify emissions law requirements and/or help technicians diagnose and solve service problems. It may also be combined with data from other sources for research purposes, but it remains confidential.

Your safety, and the safety of others, is very important. And operating this vehicle safely is an important responsibility.

To help you make informed decisions about safety, we have provided operating procedures and other information on labels and in this manual. This information alerts you to potential hazards that could hurt you or others.

Of course, it is not practical or possible to warn you about all the hazards associated with operating or maintaining your vehicle. You must use your own good judgement.

You will find this important safety information in a variety of forms, including:

- **Safety Labels** — on the vehicle.
- **Safety Messages** — preceded by a safety alert symbol ⚠ and one of three signal words: **DANGER**, **WARNING**, or **CAUTION**. These signal words mean:

⚠ DANGER	You WILL be KILLED or SERIOUSLY HURT if you don't follow instructions.
⚠ WARNING	You CAN be KILLED or SERIOUSLY HURT if you don't follow instructions.
⚠ CAUTION	You CAN be HURT if you don't follow instructions.

- **Safety Headings** — such as Important Safety Reminders or Important Safety Precautions.
- **Safety Section** — such as Driver and Passenger Safety.
- **Instructions** — how to use this vehicle correctly and safely.

This entire book is filled with important safety information — please read it carefully.

Important Handling Information

Your vehicle has higher ground clearance than a passenger vehicle designed for use only on pavement. Higher ground clearance has many advantages for off-highway driving. It allows you to travel over bumps, obstacles, and rough terrain. It also provides good visibility so you can anticipate problems earlier. Your vehicle also has a relatively short wheelbase, allowing it to respond quicker to the steering wheel than other vehicles with a longer wheelbase.

In addition to these characteristics, your vehicle's pickup bed area allows you to carry more cargo and has the dual-action tailgate to handle the items easily.

These advantages come at some cost. Because your vehicle is taller and rides higher off the ground, it has a high center of gravity. This means your vehicle can tip or roll over if you make abrupt turns. Utility vehicles have a significantly higher rollover rate than other types of vehicles. In a rollover crash, an unbelted person is significantly more likely to die than a person wearing a seat belt. As a reminder, make sure you and your passengers always wear seat belts.

Overloading or improperly loading cargo could affect your handling and the vehicle's stability, and could result in a crash. Make sure the cargo is properly loaded and all items are secured in the pickup bed area.

For information on how to reduce the risk of rollover, read "Driving Guidelines" on page 268 of this manual and the *Off-Highway Driving Guidelines* section on page 306 . Failure to operate your vehicle correctly might result in loss of control, a crash, or rollover.

Contents

Your Vehicle at a Glance (main controls) 3

Driver and Passenger Safety (seat belts, SRS, and child protection) 5

Instruments and Controls (indicators, gauges, multi-information display, dashboard, and steering column) 59

Features (climate control, audio, steering wheel, security, cruise control, HomeLink®, and other convenience items) 145

Before Driving (fuel, vehicle break-in, and cargo loading) 247

Driving (engine and transmission operation) 267

Maintenance (minder, fluid checking, minor services, and vehicle storage) 311

Taking Care of the Unexpected (flat tire, jump starting, overheating, and fuses) 359

Technical Information (vehicle specifications, tires, and emissions controls) 385

Warranty and Customer Relations (U.S. and Canada only) (warranty and contact information) 403

Authorized Manuals (U.S. only) (how to order) 407

Index I

Service Information Summary (fluid capacities and tire pressures) ..... last page

Overview of Contents

Contents
A convenient reference to the sections in this manual.

Your Vehicle at a Glance
A quick reference to the main controls in your vehicle.

Driver and Passenger Safety
Important information about the proper use and care of your vehicle's seat belts, an overview of the supplemental restraint system, and valuable information on how to protect children with child restraints.

Instruments and Controls
Explains the purpose of each instrument panel indicator and gauge, and how to use the controls on the dashboard and steering column.

Features
How to operate the heating and air conditioning system, the audio system, and other convenience features.

Before Driving
What gasoline to use, how to break-in your new vehicle, and how to load luggage and other cargo.

Driving
The proper way to start the engine, shift the transmission, and park; plus what you need to know if you're planning to tow a trailer.

Maintenance
The maintenance minder shows you when you need to take your vehicle to the dealer for maintenance service. There is also a list of things to check and instructions on how to check them.

Taking Care of the Unexpected
This section covers several problems motorists sometimes experience, and details how to handle them.

Technical Information
ID numbers, dimensions, capacities, and technical information.

Warranty and Customer Relations (U.S. and Canada only)
A summary of the warranties covering your new vehicle, and how to contact us for any reason. Refer to your warranty manual for detailed information.

Authorized Manuals (U.S. only)
How to order manuals and other technical literature.

Index

Service Information Summary
A summary of the information you need when you pull up to the fuel pump.

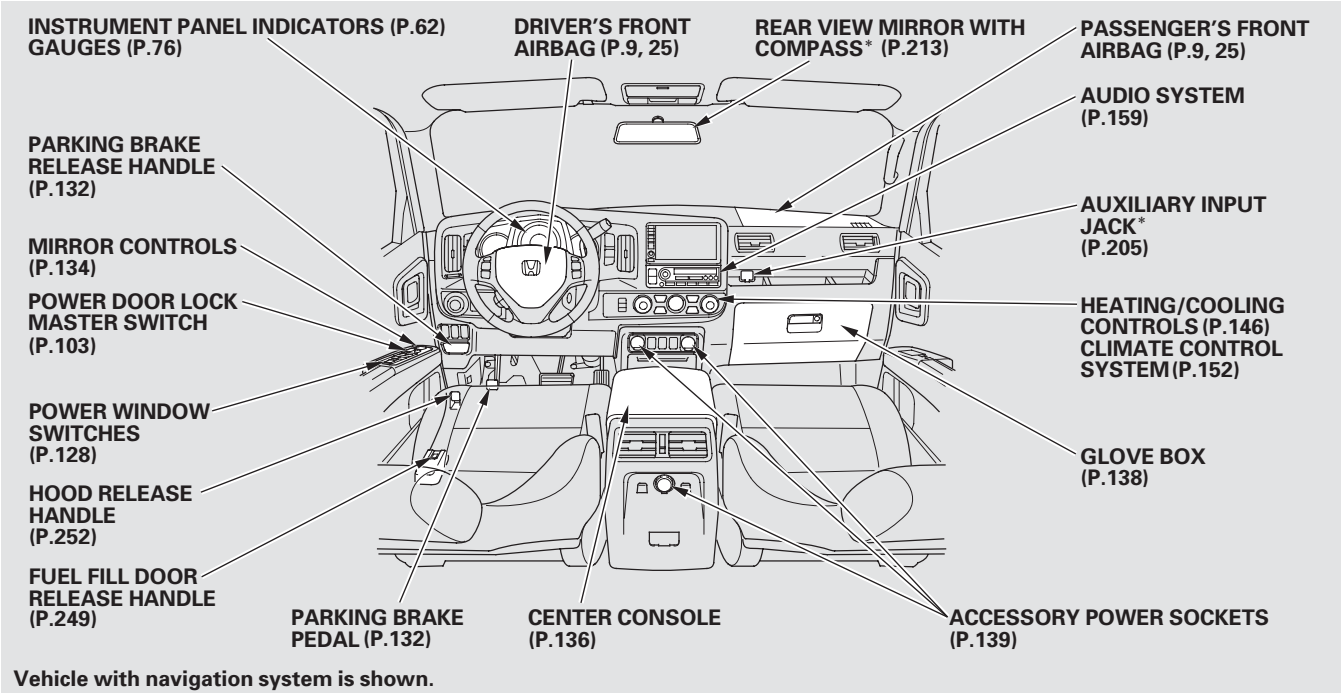

Vehicle with navigation system is shown.

* : If equipped

CONTINUED

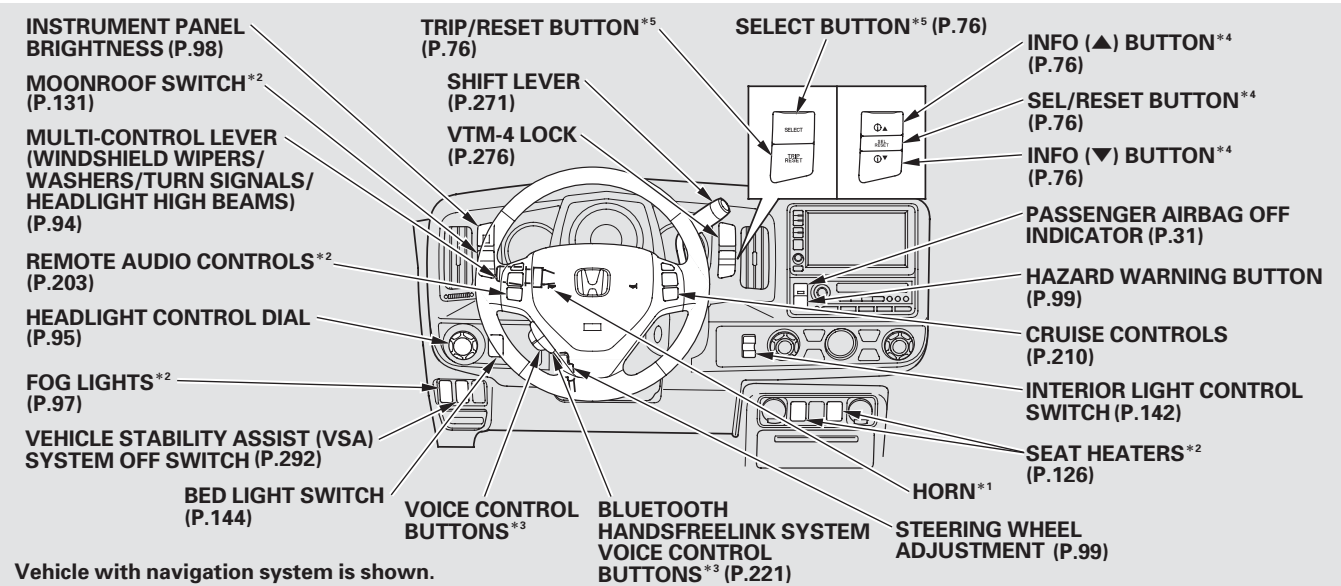

Vehicle with navigation system is shown.

* 1 : To use the horn, press the center pad of the steering wheel.
* 2 : If equipped
* 3 : Only on vehicles equipped with navigation system. Refer to the navigation system manual.
* 4 : On models with navigation system.
* 5 : On models without navigation system.

This section gives you important information about how to protect yourself and your passengers. It shows you how to use seat belts. It explains how your airbags work. And it tells you how to properly restrain infants and children in your vehicle.

Important Safety Precautions 6
Your Vehicle's Safety Features..... 7
Seat Belts 8
Airbags 9
Protecting Adults and Teens..... 11
1. Close and Lock the Doors 11
2. Adjust the Front Seats 13
3. Adjust the Seat-Backs 14
4. Adjust the Head Restraints 15
5. Fasten and Position the Seat Belts 16
6. Maintain a Proper Sitting Position 17
Advice for Pregnant Women..... 18
Additional Safety Precautions.... 19
Additional Information About Your Seat Belts 20
Seat Belt System Components... 20
Lap/Shoulder Belt 21
Automatic Seat Belt Tensioners 21
Seat Belt Maintenance 22
Additional Information About Your Airbags 23
Airbag System Components..... 23
How Your Front Airbags Work..... 25
How Your Side Airbags Work.... 28
How your Side Curtain Airbags Work..... 30
How the SRS Indicator Works... 30
How the Side Airbag Off Indicator Works 31
How the Passenger Airbag Off Indicator Works 31
Airbag Service 32
Additional Safety Precautions.... 33
Protecting Children—General Guidelines 34
All Children Must Be Restrained 34
All Children Should Sit in a Back Seat 35
The Passenger's Front Airbag Can Pose Serious Risks 35
If You Must Drive with Several Children 37
If a Child Requires Close Attention 37
Additional Safety Precautions.... 38
Protecting Infants and Small Children 39
Protecting Infants 39
Protecting Small Children 40
Selecting a Child Seat..... 41
Installing a Child Seat 42
With LATCH 43
With a Lap/Shoulder Belt 46
With a Tether 48
Protecting Larger Children 51
Checking Seat Belt Fit 51
Using a Booster Seat 52
When Can a Larger Child Sit in Front 53
Additional Safety Precautions.... 54
Carbon Monoxide Hazard 55
Safety Labels 56

Important Safety Precautions

You'll find many safety recommendations throughout this section, and throughout this manual. The recommendations on this page are the ones we consider to be the most important.

Always Wear Your Seat Belt
A seat belt is your best protection in all types of collisions. Airbags are designed to supplement seat belts, not replace them. So even though your vehicle is equipped with airbags, make sure you and your passengers always wear your seat belts, and wear them properly (see page 16).

Restrain All Children
Children age 12 and under should ride properly restrained in a back seat, not the front seat. Infants and small children should be restrained in a child seat. Larger children should use a booster seat and a lap/shoulder belt until they can use the belt properly without a booster seat (see pages 34 — 54).

Be Aware of Airbag Hazards
While airbags can save lives, they can cause serious or fatal injuries to occupants who sit too close to them, or are not properly restrained. Infants, young children, and short adults are at the greatest risk. Be sure to follow all instructions and warnings in this manual.

Don't Drink and Drive
Alcohol and driving don't mix. Even one drink can reduce your ability to respond to changing conditions, and your reaction time gets worse with every additional drink. So don't drink and drive, and don't let your friends drink and drive, either.

Pay Appropriate Attention to the Task of Driving Safely
Engaging in mobile phone conversation or other activities that keep you from paying close attention to the road, other vehicles and pedestrians could lead to a crash. Remember, situations can change quickly, and only you can decide when it is safe to divert attention away from driving.

Control Your Speed
Excessive speed is a major factor in crash injuries and deaths. Generally, the higher the speed, the greater the risk, but serious injuries can also occur at lower speeds. Never drive faster than is safe for current conditions, regardless of the maximum speed posted.

Keep Your Vehicle in Safe Condition
Having a tire blowout or a mechanical failure can be extremely hazardous. To reduce the possibility of such problems, check your tire pressures and condition frequently, and perform all regularly scheduled maintenance (see page 348).

Your Vehicle's Safety Features

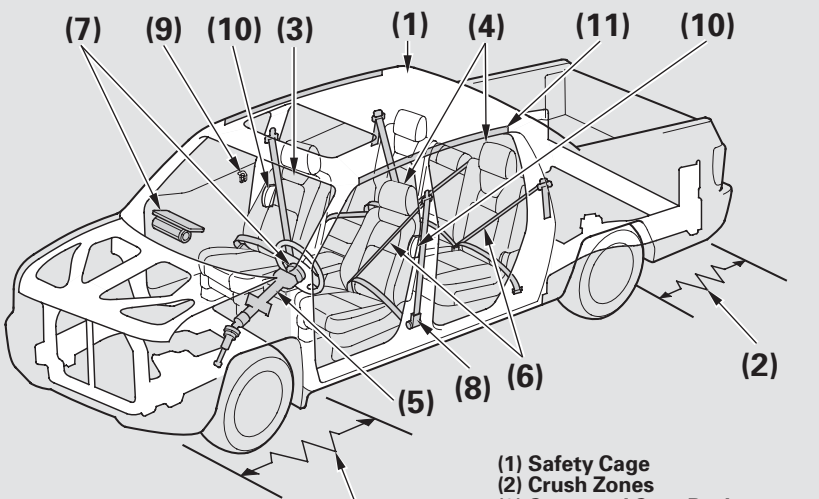

(1) Safety Cage
(2) Crush Zones
(3) Seats and Seat-Backs
(4) Head Restraints
(5) Collapsible Steering Column
(6) Seat Belts
(7) Front Airbags
(8) Front Seat Belt Tensioners
(9) Door Locks
(10) Side Airbags
(11) Side Curtain Airbags

Your vehicle is equipped with many features that work together to protect you and your passengers during a crash.

Some features do not require any action on your part. These include a strong steel framework that forms a safety cage around the passenger compartment, front and rear crush zones, a collapsible steering column, and tensioners that tighten the front seat belts in a crash.

However, you and your passengers can't take full advantage of these features unless you remain sitting in the correct position and ***always wear your seat belts***. In fact, some safety features can contribute to injuries if they are not used properly.

The following pages explain how you can take an active role in protecting yourself and your passengers.

Your Vehicle's Safety Features

Seat Belts

Your vehicle is equipped with seat belts in all seating positions.

The pickup bed is not equipped with seats or seat belts. Do not let anyone ride in the pickup bed as they can easily be thrown out and be killed or seriously injured.

Your seat belt system also includes an indicator on the instrument panel and a beeper to remind you and your passengers to fasten your seat belts.

⚠ WARNING

Allowing passengers to ride in the pickup bed or on the tailgate can result in death or serious injury in a crash.

Make sure all passengers ride in a seat and wear a seat belt properly.

Why Wear Seat Belts

Seat belts are the single most effective safety device for adults and larger children. (Infants and smaller children must be properly restrained in child seats.)

Not wearing a seat belt properly increases the chance of serious injury or death in a crash, even though your vehicle has airbags.

In addition, most states and all Canadian provinces and territories require you to wear seat belts.

⚠ WARNING

Not wearing a seat belt properly increases the chance of serious injury or death in a crash, even though your vehicle has airbags.

Be sure you and your passengers always wear seat belts and wear them properly.

When properly worn, seat belts:

- Keep you connected to the vehicle so you can take advantage of the vehicle's built-in safety features.
- Help protect you in almost every type of crash, including:
  - frontal impacts
  - side impacts
  - rear impacts
  - rollovers

- Help keep you from being thrown against the inside of the vehicle and against other occupants.
- Keep you from being thrown out of the vehicle.
- Help keep you in a good position should the airbags ever deploy. A good position reduces the risk of injury from an inflating airbag and allows you to get the best advantage from the airbag.

Of course, seat belts cannot completely protect you in every crash. But in most cases, seat belts can reduce your risk of serious injury.

What you should do: Always wear your seat belt, and make sure you wear it properly.

Airbags

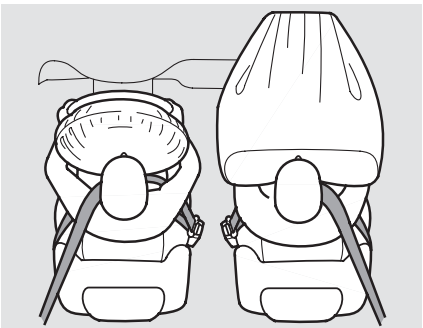

Your vehicle has a supplemental restraint system (SRS) with front airbags to help protect the heads and chests of the driver and a front seat passenger during a moderate to severe frontal collision (see page 25 for more information on how your front airbags work).

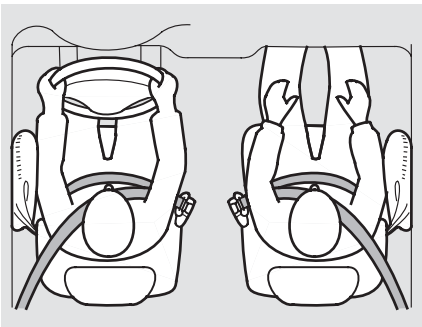

Your vehicle also has side airbags to help protect the upper torso of the driver or a front seat passenger during a moderate to severe side impact (see page 28 for more information on how your side airbags work).

CONTINUED

Your Vehicle's Safety Features

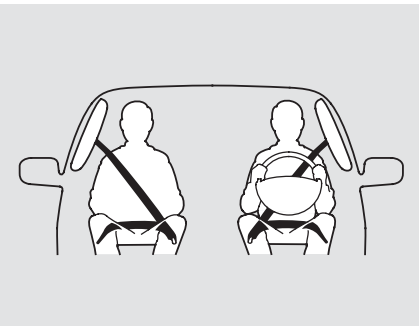

In addition, your vehicle has side curtain airbags to help protect the heads of the driver, front passenger, and passengers in the outer rear seating positions during a moderate to severe side impact or rollover (see page 30 for more information on how your side curtain airbags work).

The most important things you need to know about your airbags are:

- ***Airbags do not replace seat belts.*** They are designed to supplement the seat belts.
- ***Airbags offer no protection in rear collisions, or minor frontal or side collisions.***
- ***Airbags can pose serious hazards.*** To do their job, airbags must inflate with tremendous force. So while airbags help save lives, they can cause minor injuries or more serious or even fatal injuries if occupants are not properly restrained or sitting properly.

What you should do: Always wear your seat belt properly, and sit upright and as far back from the steering wheel as possible while allowing full control of the vehicle. A front passenger should move their seat as far back from the dashboard as possible.

The rest of this section gives more detailed information about how you can maximize your safety.

Remember, however, that no safety system can prevent all injuries or deaths that can occur in a severe crash, even when seat belts are properly worn and the airbags deploy.

Introduction
The following pages provide instructions on how to properly protect the driver, adult passengers, and teenage children who are large enough and mature enough to drive or ride in the front.

See pages 34 — 54 for important guidelines on how to properly protect infants, small children, and larger children who ride in your vehicle.

1. Close and Lock the Doors
After everyone has entered the vehicle, be sure the doors are closed and locked. Before driving, be sure the tailgate is also closed.

Your vehicle has a door and tailgate open indicator on the instrument panel to indicate when any door or the tailgate is not tightly closed.

Your vehicle also has an In-Bed Trunk open indicator to show when the In-Bed Trunk lid is not tightly closed (see page 75).

On models without navigation system

Your vehicle also has a tailgate and door open indicator on the information display to indicate when the tailgate or a specific door is not tightly closed. You will see the appropriate indicator(s) for each condition.

On models with navigation system
Your vehicle also has a tailgate, In-Bed Trunk, and door open indicator on the multi-information display to indicate when the tailgate, the In-Bed Trunk, or a specific door is not tightly closed. You will see the appropriate indicator(s) and message(s) for each condition.

You will also hear a beep when you turn the ignition switch to the ON (II) position, and each time you open any door, the tailgate, or the In-Bed Trunk with the key in the ON (II) position.

CONTINUED

Protecting Adults and Teens

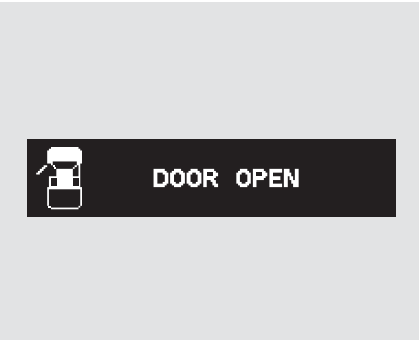

When one or more doors are open, the “DOOR OPEN” message will come on.

When the In-Bed Trunk is not tightly closed, the “TRUNK OPEN” message will come on.

When the tailgate is not tightly closed, the “TAILGATE OPEN” message will come on.

When the In-Bed Trunk, tailgate, and one or more doors are not tightly closed, the “DOOR, TRUNK & TAILGATE OPEN” message will come on.

Locking the doors reduces the chance of someone being thrown out of the vehicle during a crash, and it helps prevent passengers from accidentally opening a door and falling out.

Locking the doors also helps prevent an outsider from unexpectedly opening a door when you come to a stop.

This vehicle has auto door locking/ unlocking features. See page 104 for how to set them.

2.Adjust the Front Seats

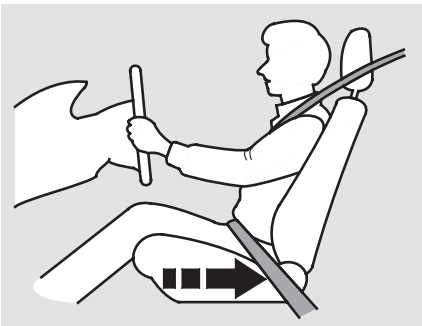

Adjust the driver’s seat as far to the rear as possible while allowing you to maintain full control of the vehicle. Have a front passenger adjust their seat as far to the rear as possible.

CONTINUED

Protecting Adults and Teens

If you sit too close to the steering wheel or dashboard, you can be seriously injured by an inflating front airbag, or by striking the steering wheel or dashboard.

The National Highway Traffic Safety Administration and Transport Canada recommend that drivers allow at least 10 inches (25 cm) between the center of the steering wheel and the chest. In addition to adjusting the seat, you can adjust the steering wheel up and down (see page 99).

If you cannot get far enough away from the steering wheel and still reach the controls, we recommend that you investigate whether some type of adaptive equipment may help.

⚠ WARNING

Sitting too close to a front airbag can result in serious injury or death if the front airbags inflate.

Always sit as far back from the front airbags as possible.

On RT and Canadian DX and VP models
Once your seat is adjusted correctly, rock it back and forth to make sure it is locked into position. See page 119 for how to adjust the front seats.

3.Adjust the Seat-Backs

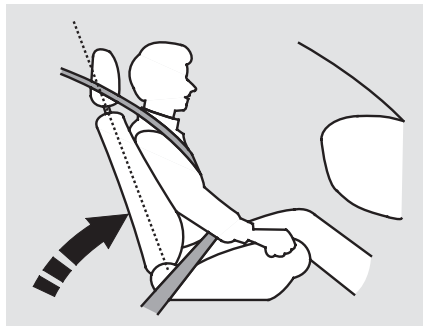

Adjust the driver's seat-back to a comfortable, upright position, leaving ample space between your chest and the airbag cover in the center of the steering wheel.

Passengers with adjustable seat-backs should also adjust their seat-back to a comfortable, upright position.

⚠ WARNING

Reclining the seat-back too far can result in serious injury or death in a crash.

Adjust the seat-back to an upright position, and sit well back in the seat.

Reclining a seat-back so that the shoulder part of the belt no longer rests against the occupant's chest reduces the protective capability of the belt. It also increases the chance of sliding under the belt in a crash and being seriously injured. The farther a seat-back is reclined, the greater the risk of injury.

See page 120 for how to adjust the manual adjustable seat-back, and page 121 for the power adjustable seat-back.

4. Adjust the Head Restraints

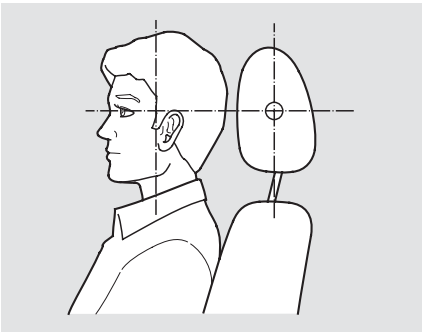

Adjust the driver's head restraint so the center of the back of your head rests against the center of the restraint.

Have passengers adjust their head restraints properly as well. Taller persons should adjust their restraint as high as possible.

When a passenger is seated in the rear center seating position, make sure the center head restraint is adjusted to its highest position.

⚠ WARNING

Improperly positioning head restraints reduces their effectiveness and you can be seriously injured in a crash.

Make sure head restraints are in place and positioned properly before driving.

Properly adjusted head restraints will help protect occupants from whiplash and other crash injuries.

See page 123 for how to adjust the head restraints and how the driver's and front passenger's active head restraints work.

5. Fasten and Position the Seat Belts

Insert the latch plate into the buckle, then tug on the belt to make sure the belt is securely latched. Check that the belt is not twisted, because a twisted belt can cause serious injuries in a crash.

Position the lap part of the belt as low as possible across your hips, then pull up on the shoulder part of the belt so the lap part fits snugly. This lets your strong pelvic bones take the force of a crash and reduces the chance of internal injuries.

If necessary, pull up on the belt again to remove any slack, then check that the belt rests across the center of your chest and over your shoulder.

This spreads the forces of a crash over the strongest bones in your upper body.

⚠ WARNING

Improperly positioning the seat belts can cause serious injury or death in a crash.

Make sure all seat belts are properly positioned before driving.

If the seat belt touches or crosses your neck, or if it crosses your arm instead of your shoulder, you need to adjust the seat belt anchor height.

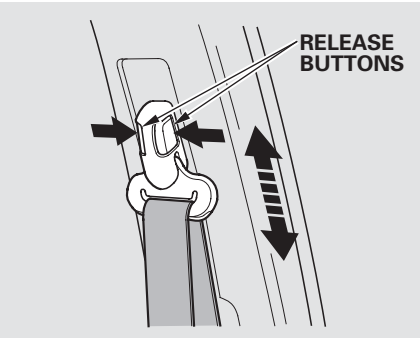

The front seats have adjustable seat belt anchors. To adjust the height of an anchor, squeeze the two release buttons, and slide the anchor up or down as needed (it has four positions).

Never place the shoulder portion of a lap/shoulder belt under your arm or behind your back. This could cause very serious injuries in a crash.

If a seat belt does not seem to work as it should, it may not protect the occupant in a crash.

No one should sit in a seat with an inoperative seat belt. Using a seat belt that is not working properly can result in serious injury or death. Have your dealer check the belt as soon as possible.

See page 20 for additional information about your seat belts and how to take care of them.

6. Maintain a Proper Sitting Position

After all occupants have adjusted their seats and head restraints, and put on their seat belts, it is very important that they continue to sit upright, well back in their seats, with their feet on the floor, until the vehicle is safely parked and the engine is off.

Sitting improperly can increase the chance of injury during a crash. For example, if an occupant slouches, lies down, turns sideways, sits forward, leans forward or sideways, or puts one or both feet up, the chance of injury during a crash is greatly increased.

CONTINUED

Protecting Adults and Teens

In addition, an occupant who is out of position in the front seat can be seriously or fatally injured in a crash by striking interior parts of the vehicle or being struck by an inflating front airbag.

⚠ WARNING

Sitting improperly or out of position can result in serious injury or death in a crash.

Always sit upright, well back in the seat, with your feet on the floor.

Advice for Pregnant Women

If you are pregnant, the best way to protect yourself and your unborn child when driving or riding in a vehicle is to always wear a seat belt, and keep the lap part of the belt as low as possible across the hips.

When driving, remember to sit upright and adjust the seat as far back as possible while allowing full control of the vehicle. When riding as a front passenger, adjust the seat as far back as possible.

This will reduce the risk of injuries to both you and your unborn child that can be caused by a crash or an inflating front airbag.

Each time you have a checkup, ask your doctor if it's okay for you to drive.

Additional Safety Precautions

- ***Never let passengers ride in the area in front of a folded-up rear seat.*** If they do, they could be very seriously injured in a crash.

- ***Never let passengers ride in the pickup bed.*** If they do, they could be killed or very seriously injured in a crash.

- ***Never let passengers ride inside a truck cap (shell).*** They could be killed or injured in a crash, or become ill or even die from carbon monoxide poisoning if engine exhaust enters the cap.

- ***Passengers should not stand up or change seats while the vehicle is moving.*** A passenger who is not wearing a seat belt during a crash or emergency stop can be thrown against the inside of the vehicle, against other occupants, or out of the vehicle.

- ***Two people should never use the same seat belt.*** If they do, they could be very seriously injured in a crash.

- ***Do not put any accessories on seat belts.*** Devices intended to improve occupant comfort or reposition the shoulder part of a seat belt can reduce the protective capability of the seat belt and increase the chance of serious injury in a crash.

- ***Do not place hard or sharp objects between yourself and a front airbag.*** Carrying hard or sharp objects on your lap, or driving with a pipe or other sharp object in your mouth, can result in injuries if your front airbag inflates.

- ***Keep your hands and arms away from the airbag covers.*** If your hands or arms are close to an airbag cover, they could be injured if the airbag inflates.

- ***Do not attach or place objects on the front airbag covers.*** Objects on the covers marked “SRS AIRBAG” could interfere with the proper operation of the airbags or be propelled inside the vehicle and hurt someone if the airbags inflate.

- ***Do not attach hard objects on or near a door.*** If a side airbag or a side curtain airbag inflates, a cup holder or other hard object attached on or near the door could be propelled inside the vehicle and hurt someone.

- ***Do not cover or replace front seat-back covers without consulting your dealer.*** Improperly replacing or covering front seat-back covers can prevent your side airbags from inflating during a side impact.

Additional Information About Your Seat Belts

Seat Belt System Components
Your seat belt system includes lap/shoulder belts in all seating positions. The front seat belts are also equipped with automatic seat belt tensioners.

This system uses the same sensors as the front airbags to monitor whether the front seat belts are latched or unlatched, and how much weight is on the front passenger's seat (see pages 27 and 28).

The seat belt system includes an indicator on the instrument panel and a beeper to remind you and your passengers to fasten your seat belts.

This system monitors the front seat belts. If you turn the ignition switch to the ON (II) position before your seat belt is fastened, the beeper will sound and the indicator will flash. If your seat belt is not fastened before the beeper stops, the indicator will stop flashing but remain on.

If a front passenger does not fasten their seat belt, the indicator will come on about 6 seconds after the ignition switch is turned to the ON (II) position.

If either the driver or a front passenger does not fasten their seat belt while driving, the beeper will sound and the indicator will flash again at regular intervals.

On models with navigation system
You will also see a "FASTEN SEAT BELT" or "FASTEN PASSENGER SEAT BELT" message on the multi-information display (see page 90).

When no one is sitting in the front passenger's seat, or a child or small adult is riding there, the indicator should not come on and the beeper should not sound.

If the indicator comes on or the beeper sounds when the driver's seat belt is latched and there is no front seat passenger and no items on the front seat, something may be interfering with the monitoring system. Look for and remove:

- Any items under the front passenger's seat.
- Any object(s) hanging on the seat or in the seat-back pocket.
- Any object on the floor that is touching the rear of the seat-back.

If no obstructions are found, have your vehicle checked by a dealer.

Additional Information About Your Seat Belts

Lap/Shoulder Belt
The lap/shoulder belt goes over your shoulder, across your chest, and across your hips.

To fasten the belt, insert the latch plate into the buckle, then tug on the belt to make sure the buckle is latched (see page 16 for how to properly position the belt).

To unlock the belt, press the red PRESS button on the buckle. Guide the belt across your body so that it retracts completely. After exiting the vehicle, be sure the belt is out of the way and will not get closed in the door.

All seat belts have an emergency locking retractor. In normal driving, the retractor lets you move freely in your seat while it keeps some tension on the belt. During a collision or sudden stop, the retractor automatically locks the belt to help restrain your body.

The seat belts in all positions except the driver's have a lockable retractor that must be activated to secure a child seat (see page 46).

If the shoulder part of the belt is pulled all the way out, the lockable retractor will activate. The belt will retract, but it will not allow the passenger to move freely.

To deactivate the lockable retractor, unlatch the buckle and let the seat belt fully retract. To refasten the seat belt, pull it out only as far as needed.

Automatic Seat Belt Tensioners

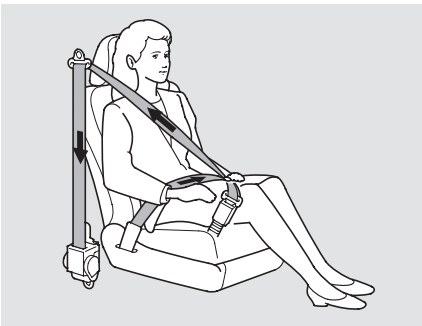

For added protection, the front seat belts are equipped with automatic seat belt tensioners. When activated, the tensioners immediately tighten the belts to help hold the driver and a front passenger in position.

CONTINUED

Additional Information About Your Seat Belts

The tensioners are designed to activate in any collision severe enough to cause the front airbags to deploy, or if a sensor detects your vehicle is about to roll over (see page 30).

If a side curtain airbag deploys during a side impact, the tensioner on that side of the vehicle will also deploy.

The tensioners can also be activated during a collision in which the front airbags *do not deploy*. In this case, the airbags would not be needed, but the extra tension in the seat belt could be helpful.

When the tensioners are activated, the seat belts will remain tight until they are unbuckled.

Seat Belt Maintenance
For safety, you should check the condition of your seat belts regularly.

Pull each belt out fully, and look for frays, cuts, burns, and wear. Check that the latches work smoothly and the belts retract easily. If a belt does not retract easily, cleaning the belt may correct the problem (see page 344). Any belt that is not in good condition or working properly will not provide good protection and should be replaced as soon as possible.

Honda provides a limited warranty on seat belts. See your *Honda Warranty Information* booklet for details.

If a seat belt is worn during a crash, it must be replaced by the dealer. A belt that has been worn during a crash may not provide the same level of protection in a subsequent crash.

The dealer should also inspect the anchors for damage and replace them if needed. If the automatic seat belt tensioners activate during a crash, they must be replaced.

⚠ WARNING

Not checking or maintaining seat belts can result in serious injury or death if the seat belts do not work properly when needed.

Check your seat belts regularly and have any problem corrected as soon as possible.

Airbag System Components

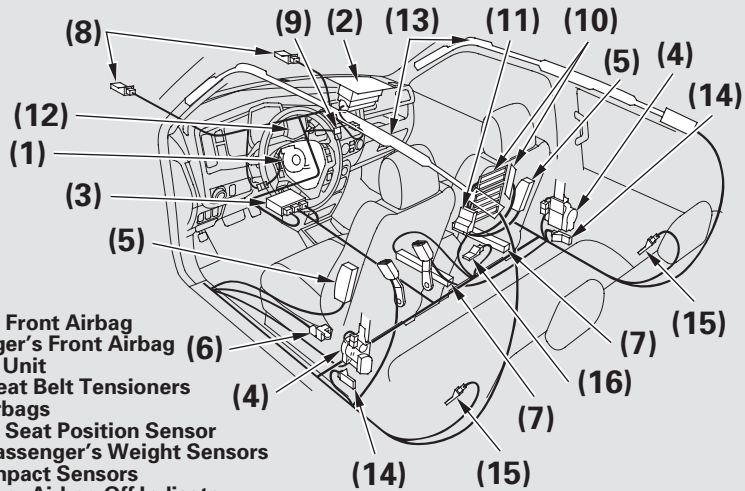

(1) Driver's Front Airbag
(2) Passenger's Front Airbag
(3) Control Unit
(4) Front Seat Belt Tensioners
(5) Side Airbags
(6) Driver's Seat Position Sensor
(7) Front Passenger's Weight Sensors
(8) Front Impact Sensors
(9) Passenger Airbag Off Indicator
(10) Occupant Position Detection System (OPDS) Sensors
(11) Front Passenger's Weight Sensors/OPDS Sensors Control Unit
(12) SRS Indicator
(13) Side Curtain Airbags
(14) Side Impact Sensors (First)
(15) Side Impact Sensors (Second)
(16) Roll Rate Sensor

Your airbag system includes:

- Two SRS (supplemental restraint system) front airbags. The driver's airbag is stored in the center of the steering wheel; the front passenger's airbag is stored in the dashboard. Both are marked "SRS AIRBAG" (see page 25).
- Two side airbags, one for the driver and one for a front passenger. The airbags are stored in the outer edges of the seat-backs. Both are marked "SIDE AIRBAG" (see page 28).
- Two side curtain airbags, one for each side of the vehicle. The airbags are stored in the ceiling, above the side windows. The front and rear pillars are marked "SIDE CURTAIN AIRBAG" (see page 30).

CONTINUED

Additional Information About Your Airbags

- Automatic front seat belt tensioners (see page 21).
- Sensors that can detect a moderate to severe front impact, side impact, or if your vehicle is about to rollover.
- Sensors that can detect whether a child is in the passenger's side airbag path and signal the control unit to turn the airbag off (see page 29).
- Sensors that can detect whether the driver's seat belt and the front passenger's seat belt are latched or unlatched (see page 20).
- A driver's seat position sensor that monitors the distance of the seat from the front airbag. If the seat is too far forward, the airbag will inflate with less force (see page 27).
- Weight sensors that monitor the weight on the front passenger's seat. If the weight is about 65 lbs (29 kg) or less (the weight of an infant or small child), the passenger's front airbag will be turned off (see page 27).
- A rollover sensor that can detect if your vehicle is about to roll over and signal the control unit to deploy both side curtain airbags and front seat belt tensioners (see page 30).
- A sophisticated electronic system that continually monitors and records information about the sensors, the control unit, the airbag activators, the seat belt tensioners, and driver and front passenger seat belt use when the ignition switch is in the ON (II) position.
- An indicator on the instrument panel that alerts you to a possible problem with your airbags, sensors, or seat belt tensioners (see page 30).
- An indicator on the instrument panel that alerts you that the passenger's side airbag has been turned off (see page 31).
- An indicator on the dashboard that alerts you that the passenger's front airbag has been turned off (see page 31).
- Emergency backup power in case your vehicle's electrical system is disconnected in a crash.

How Your Front Airbags Work

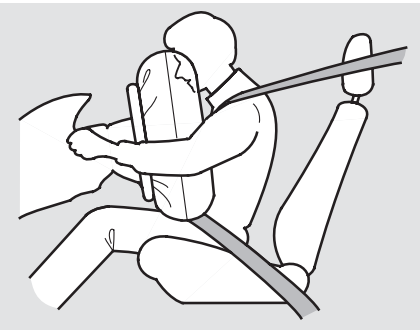

If you ever have a moderate to severe frontal collision, sensors will detect the vehicle's rapid deceleration.

If the rate of deceleration is high enough, the control unit will inflate the driver's and front passenger's airbags, at the time and with the force needed.

During a frontal crash, your seat belt restrains your lower body and torso, and the front airbag helps protect your head and chest.

Although both airbags normally inflate within a split second of each other, it is possible for only one airbag to deploy.

This can happen if the severity of a collision is at the margin, or threshold, that determines whether or not the airbags will deploy. In such cases, the seat belt will provide sufficient protection, and the supplemental protection offered by the airbag would be minimal.

Only the driver's airbag will deploy if there is no passenger in the front seat, or if the advanced airbag system has turned the passenger's airbag off (see page 27).

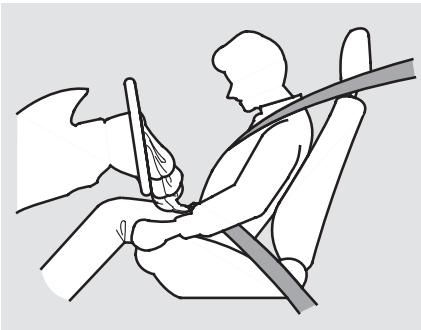

After inflating, the front airbags immediately deflate, so they won't interfere with the driver's visibility, or the ability to steer or operate other controls.

CONTINUED

Additional Information About Your Airbags

The total time for inflation and deflation is one-tenth of a second, so fast that most occupants are not aware that the airbags deployed until they see them lying in their laps.

After a crash, you may see what looks like smoke. This is actually powder from the airbag's surface. Although the powder is not harmful, people with respiratory problems may experience some temporary discomfort. If this occurs, get out of the vehicle as soon as it is safe to do so.

Dual-Stage Airbags

Your front airbags are dual-stage airbags. This means they have two inflation stages that can be ignited sequentially or simultaneously, depending on crash severity.

In a ***more severe*** crash, both stages will ignite simultaneously to provide the quickest and greatest protection.

In a ***less severe*** crash, one stage will ignite first, then the second stage will ignite a split second later. This provides longer airbag inflation time with a little less force.

Dual-Threshold Airbags

Your front airbags are also dual-threshold airbags. Airbags with this feature have two deployment thresholds that depend on whether sensors detect the occupant is wearing a seat belt or not.

If the occupant's belt is ***not latched***, the airbag will deploy at a slightly lower threshold, because the occupant would need extra protection.

If the occupant's belt is ***latched***, the airbag will deploy at a slightly higher threshold, when the airbag would be needed to supplement the protection provided by the seat belt.

Advanced Airbags

Your front airbags are also advanced airbags. The main purpose of this feature is to help prevent airbag-caused injuries to short drivers and children or small-statured adults who ride in front.

For both advanced airbags to work properly:

- Occupants must sit upright and wear their seat belts properly.
- Do not spill any liquids on or under the seats, cover the sensors, or put any objects or metal items under the front seats.

Failure to follow these instructions could damage the sensors or prevent them from working properly.

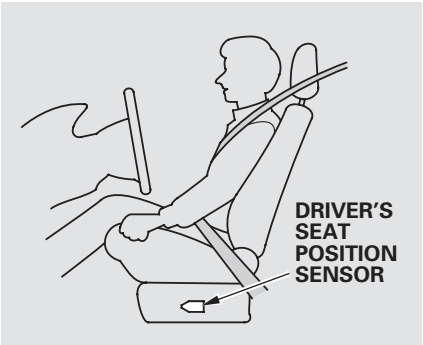

The driver's advanced front airbag system includes a seat position sensor under the seat. If the seat is too far forward, the airbag will inflate with less force, regardless of the severity of the impact.

If there is a problem with the sensor, the SRS indicator will come on, and the airbag will inflate in the normal manner regardless of the driver's seating position.

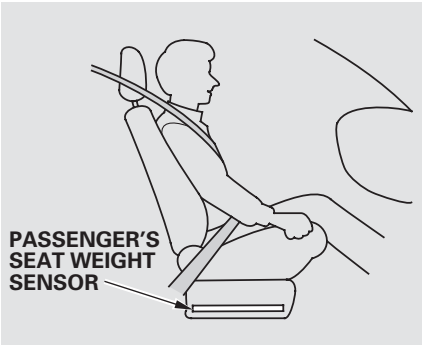

The passenger's advanced front airbag system has weight sensors under the seat. Although Honda does not encourage carrying an infant or small child in front, if the sensors detect the weight of an infant or small child (up to about 65 lbs or 29 kg), the system will automatically turn the passenger's front airbag off.

CONTINUED

Additional Information About Your Airbags

Be aware that objects placed on the passenger's seat can also cause the airbag to be turned off.

When the passenger airbag gets turned off by the weight sensors, a "passenger airbag off" indicator in the center of the dashboard comes on (see page 31).

If the weight sensors detect there is no passenger in the front seat, the airbag is automatically turned off. However, the passenger airbag off indicator in this situation will not come on.

To ensure that the passenger's advanced front airbag system will work properly, ***do not do anything that would increase or decrease the weight on the front passenger's seat.*** This includes:

- A rear passenger pushing or pulling on the back of the front passenger's seat.
- Moving the front seat forcibly back against cargo on the seat or floor behind it.
- Hanging heavy items on the front passenger seat, or placing heavy items in the seat-back pocket.
- Back seat passengers should not wedge objects or intentionally force their feet under the front passenger seat.

Also, make sure the floor mat behind the front passenger's seat is hooked to the floor mat anchor (see page 345). If it is not, the mat may interfere with the proper operation of the sensors and operation of the seat.

How Your Side Airbags Work

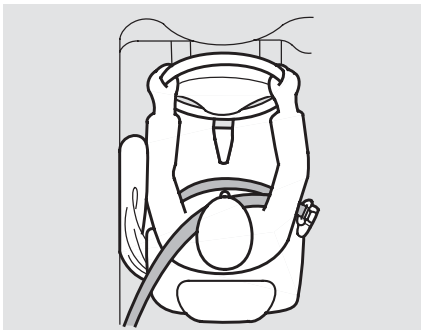

If you ever have a moderate to severe side impact, sensors will detect rapid acceleration and signal the control unit to instantly inflate either the driver's or the passenger's side airbag.

Additional Information About Your Airbags

Only one airbag will deploy during a side impact. If the impact is on the passenger's side, the passenger's side airbag will deploy even if there is no passenger.

To get the best protection from the side airbags, front seat occupants should wear their seat belts and sit upright and well back in their seats.

Side Airbag Cutoff System

Your vehicle has a side airbag cutoff system designed primarily to protect a child riding in the front passenger's seat.

Although Honda does not encourage children to ride in front, if the position sensors detect a child has leaned into the side airbag's deployment path, the airbag will shut off.

The side airbag may also shut off if a short adult leans sideways, or a larger adult slouches and leans sideways into the airbag's deployment path.

Objects placed on the front passenger seat can also cause the side airbag to be shut off.

If the side airbag off indicator comes on (see page 31), have the passenger sit upright. Once the passenger is out of the airbag's deployment path, the system will turn the airbag back on, and the indicator will go out.

There will be some delay between the moment the passenger moves into or out of the airbag deployment path and when the indicator comes on or goes off.

A front seat passenger should not use a cushion or another object as a backrest. It may prevent the cutoff system from working properly.

Additional Information About Your Airbags

How Your Side Curtain Airbags Work

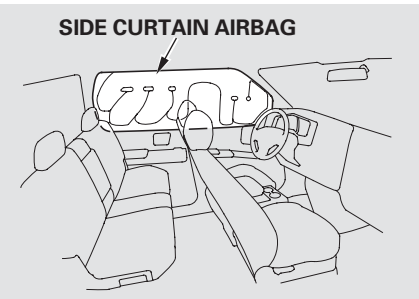

In a Side Impact

In a moderate to severe side impact, sensors will detect rapid acceleration and signal the control unit to instantly inflate the side curtain airbag and activate the seat belt tensioner on the driver's or the passenger's side of the vehicle.
If the impact is on the passenger's side, the passenger's side curtain airbag will inflate even if there are no occupants on that side of the vehicle.

In a Rollover

A rollover sensor monitors the degree and rate your vehicle may roll over and automatically deploy the side curtain airbags and activate the front seat belt tensioners (see page 21).

In a rollover toward the front passenger's side of the vehicle, both side curtain airbags will inflate and the front seat belt tensioners will activate even if there are no occupants on that side of the vehicle.

To get the best protection from the side curtain airbags, occupants should wear their seat belts and sit upright and well back in their seats.

How the SRS Indicator Works

The SRS indicator alerts you to a potential problem with your airbags or seat belt tensioners.

When you turn the ignition switch to the ON (II) position, this indicator comes on for several seconds then goes off. This tells you the system is working properly.

If the indicator comes on at any other time, or does not come on at all, you should have the system checked by your dealer. For example:

- If the SRS indicator does not come on after you turn the ignition switch to the ON (II) position.
- If the indicator stays on after the engine starts.
- If the indicator comes on or flashes on and off while you drive.

On models with navigation system
You will also see a "CHECK AIRBAG SYSTEM" message on the multi-information display (see page 90).

If you see any of these indications, the airbags and seat belt tensioners may not work properly when you need them.

⚠ WARNING

Ignoring the SRS indicator can result in serious injury or death if the airbag systems or tensioners do not work properly.

Have your vehicle checked by a dealer as soon as possible if the SRS indicator alerts you to a possible problem.

How the Side Airbag Off Indicator Works

U.S. Canada

This indicator alerts you that the passenger's side airbag has been automatically shut off. It does ***not*** mean there is a problem with your side airbags.

When you turn the ignition switch to the ON (II) position, the indicator should come on for several seconds and then go off (see page 64). If it doesn't come on, stays on, or comes on while driving without a passenger in the front seat, have the system checked.

On models with navigation system
You will also see a "PASSENGER SIDE AIRBAG OFF" message on the multi-information display (see page 90).

How the Passenger Airbag Off Indicator Works

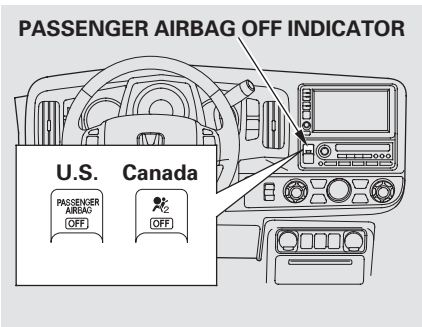

This indicator alerts you that the passenger's front airbag has been shut off because weight sensors detect about 65 lbs (29 kg) or less (the weight of an infant or small child) on the front passenger's seat. It does ***not mean*** there is a problem with the airbag.

CONTINUED

Additional Information About Your Airbags

Be aware that objects placed on the front seat can cause the indicator to come on.

If no weight is detected on the front seat, the airbag will be automatically shut off. However, the indicator will not come on.

The passenger airbag off indicator may come on and off repeatedly if the total weight on the seat is near the airbag cutoff threshold.

If an adult or teenage passenger is riding in front, move the seat as far to the rear as possible, and have the passenger sit upright and wear the seat belt properly.

If the indicator comes on with no front seat passenger and no objects on the seat, or with an adult riding there, something may be interfering with the weight sensors. Look for and remove:

- Any items under the front passenger's seat.
- Any object(s) hanging on the seat or in the seat-back pocket.
- Any object(s) touching the rear of the seat-back.

If no obstructions are found, have your vehicle checked by a dealer as soon as possible.

Airbag Service

Your airbag systems are virtually maintenance free, and there are no parts you can safely service. However, you must have your vehicle serviced if:

- ***An airbag ever inflates.*** Any airbag that has deployed must be replaced along with the control unit and other related parts. Any seat belt tensioner that activates must also be replaced.

  Do not try to remove or replace any airbag by yourself. This must be done by an authorized dealer or a knowledgeable body shop.

- ***The SRS indicator alerts you to a problem.*** Take your vehicle to an authorized dealer as soon as possible. If you ignore this indication, your airbags may not operate properly.

- ***If your vehicle has a moderate to severe impact.*** Even if your airbags do not inflate, your dealer should inspect the driver's seat position sensor, the front passenger's weight sensors, the front seat belt tensioners, and all seat belts and their anchors worn during a crash to make sure they are operating properly.

Additional Safety Precautions

- ***Do not attempt to deactivate your airbags.*** Together, airbags and seat belts provide the best protection.

- ***Do not tamper with airbag components or wiring for any reason.*** Tampering could cause the airbags to deploy, possibly causing very serious injury.

- ***Do not expose the front passenger's seat-back to liquid.*** If water or another liquid soaks into a seat-back, it can prevent the side airbag cutoff system from working properly.

- ***Do not remove or modify a front seat without consulting your dealer.*** This could make the driver's seat position sensor or the front passenger's weight sensors ineffective. If it is necessary to remove or modify a front seat to accommodate a person with disabilities, first contact Honda Automobile Customer Service at (800) 999-1009.

Protecting Children — General Guidelines

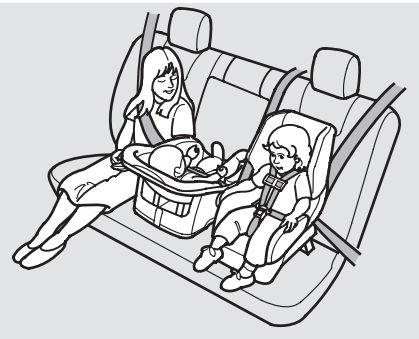

Children depend on adults to protect them. However, despite their best intentions, many adults do not know how to *properly* protect child passengers.

If you have children, or ever need to drive with a child in your vehicle, be sure to read this section. It begins with important general guidelines, then presents special information for infants, small children, and larger children.

All Children Must Be Restrained
Each year, many children are injured or killed in vehicle crashes because they are either unrestrained or not properly restrained. In fact, traffic accidents are the number one cause of death of children age 12 and under.

To reduce the number of child deaths and injuries, every state, Canadian province and territory requires that infants and children be properly restrained when they ride in a vehicle.

Infants and small children must be restrained in an approved child seat that is properly secured to the vehicle (see pages 39 — 50).

⚠ WARNING

Children who are unrestrained or improperly restrained can be seriously injured or killed in a crash.

Any child too small for a seat belt should be properly restrained in a child seat. A larger child should be properly restrained with a seat belt and use a booster seat if necessary.

Larger children must be restrained with a lap/shoulder belt and ride on a booster seat until the seat belt fits them properly (see pages 51 — 54).

All Children Should Sit in a Back Seat

According to statistics, children of all ages and sizes are safer when they are restrained in a back seat.
The National Highway Traffic Safety Administration and Transport Canada recommend that all children aged 12 and under be properly restrained in a back seat. Some states have laws restricting where children may ride.

Children who ride in the back are less likely to be injured by striking interior vehicle parts during a collision or hard braking. Also, children cannot be injured by an inflating front airbag when they ride in the back.

The Passenger's Front Airbag Can Pose Serious Risks

Front airbags have been designed to help protect adults in a moderate to severe frontal collision. To do this, the passenger's front airbag is quite large, and it can inflate with enough force to cause very serious injuries.

Even though your vehicle has an advanced front airbag system that automatically turns the passenger's front airbag off under certain circumstances (see page 31), please follow these guidelines:

Infants

Never put a rear-facing child seat in the front seat of a vehicle equipped with a passenger's front airbag. If the airbag inflates, it can hit the back of the child seat with enough force to kill or very seriously injure an infant.

Small Children

Placing a forward-facing child seat in the front seat of a vehicle equipped with a passenger's front airbag can be hazardous. If the vehicle seat is too far forward, or the child's head is thrown forward during a collision, an inflating front airbag can strike the child with enough force to kill or very seriously injure a small child.

Larger Children

Children who have outgrown child seats are also at risk of being injured or killed by an inflating passenger's front airbag. Whenever possible, larger children should sit in the back seat, on a booster seat if needed, and be properly restrained with a seat belt (see page 51 for important information about protecting larger children).

CONTINUED

Protecting Children – General Guidelines

To remind you of the passenger's front airbag hazards, and that children must be properly restrained in a back seat, your vehicle has warning labels on the dashboard (U.S. models) and on the front visors. Please read and follow the instructions on these labels.

U.S. Models

SUN VISORS

DASHBOARD

Canadian Models

SUN VISORS

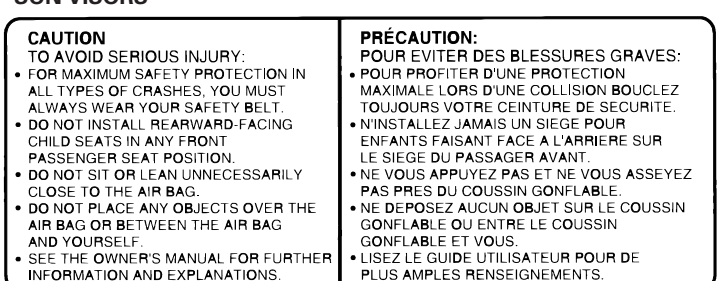

If You Must Drive with Several Children

Your vehicle has a back seat where children can be properly restrained. If you ever have to carry a group of children, and a child must ride in front:

- Place the largest child in the front seat, provided the child is large enough to wear the lap/shoulder belt properly (see page 51).
- Move the vehicle seat as far to the rear as possible (see page 13).
- Have the child sit upright and well back in the seat (see page 17).
- Make sure the seat belt is properly positioned and secured (see page 16).

If a Child Requires Close Attention

Many parents say they prefer to put an infant or a small child in the front passenger seat so they can watch the child, or because the child requires attention.

Placing a child in the front seat exposes the child to hazards in a frontal collision, and paying close attention to a child distracts the driver from the important tasks of driving, placing both of you at risk.

If a child requires close physical attention or frequent visual contact, we strongly recommend that another adult ride with the child in the back seat. The back seat is far safer for a child than the front.

Protecting Children — General Guidelines

Additional Safety Precautions

- ***Never hold an infant or child on your lap.*** If you are not wearing a seat belt in a crash, you could be thrown forward and crush the child against the dashboard or a seat-back. If you are wearing a seat belt, the child can be torn from your arms and be seriously hurt or killed.

- ***Never put a seat belt over yourself and a child.*** During a crash, the belt could press deep into the child and cause serious or fatal injuries.

- ***Never let two children use the same seat belt.*** If they do, they could be very seriously injured in a crash.

- ***Make sure any unused seat belt that a child can reach is buckled, the lockable retractor is activated, and the belt is fully retracted and locked.*** If a child wraps a loose seat belt around their neck, they can be seriously or fatally injured. (See pages 46 and 47 for how to activate and deactivate the lockable retractor.)

- ***Use the childproof door locks to prevent children from opening the rear doors.*** This can prevent children from accidentally falling out (see page 104).

- ***Do not leave children alone in a vehicle.*** Leaving children without adult supervision is illegal in most states, Canadian provinces and territories, and can be very hazardous.

  For example, infants and small children left in a vehicle on a hot day can die from heatstroke. A child left alone with the key in the ignition switch can accidentally set the vehicle in motion, possibly injuring themselves or others.

- ***Lock all doors and the In-Bed Trunk when your vehicle is not in use.*** Children who play in vehicles can accidentally get trapped inside. Teach your children not to play in or around vehicles. Know how to operate the emergency In-Bed Trunk opener and decide if your children should be shown how to use this feature (see page 117).

- ***Teach your children not to play on the pickup bed.*** Opening or closing the tailgate could cause accidental injuries.

- ***Keep vehicle keys/remote transmitters out of the reach of children.*** Even very young children learn how to unlock vehicle doors, turn on the ignition switch, and open the windows, which can lead to accidental injury or death.

Protecting Infants

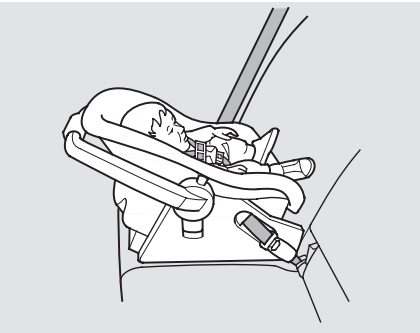

Child Seat Type
An infant must be properly restrained in a rear-facing, reclining child seat until the child reaches the seat maker's weight or height limit for the seat, and the child is at least one year old.

Only a rear-facing child seat provides proper support for a baby's head, neck, and back.

Two types of seats may be used: a seat designed exclusively for infants, or a convertible seat used in the rear-facing, reclining mode.

Do not put a rear-facing child seat in a forward-facing position. If placed facing forward, an infant could be very seriously injured during a frontal collision.

Rear-facing Child Seat Placement
A rear-facing child seat can be placed in any seating position in the back seat, but not in the front. ***Never put a rear-facing child seat in the front seat.***

If the passenger's front airbag inflates, it can hit the back of the child seat with enough force to kill or seriously injure an infant.

When properly installed, a rear-facing child seat may prevent the driver or a front passenger from moving their seat as far back as recommended, or from locking their seat-back in the desired position.

It could also interfere with proper operation of the passenger's advanced front airbag system.

CONTINUED

Protecting Infants and Small Children

In any of these situations, we strongly recommend that you install the child seat directly behind the front passenger's seat, move the seat as far forward as needed, and leave it unoccupied. Or, you may wish to get a smaller rear-facing child seat.

⚠ WARNING

Placing a rear-facing child seat in the front seat can result in serious injury or death during a crash.

Always place a rear-facing child seat in the back seat, not the front.

Protecting Small Children

Child Seat Type
Many states, Canadian provinces and territories allow a child one year of age or older who also meets the minimum size and weight requirements to transition from a rear-facing child seat to a forward facing seat. Know the requirements where you are driving and follow the child seat instructions. Many experts recommend use of a rear-facing seat up to age two, if the child's height and weight are appropriate for a rear-facing seat.

Of the different seats available, we recommend those that have a five-point harness system as shown.

We also recommend that a small child use the child seat until the child reaches the weight or height limit for the seat.

Child Seat Placement
We strongly recommend placing a forward-facing child seat in a back seat, not the front.

Placing a forward-facing child seat in the front seat of a vehicle equipped with a passenger's airbag can be hazardous. If the vehicle seat is too far forward, or the child's head is thrown forward during a collision, an inflating airbag can strike the child with enough force to cause very serious or fatal injuries.

Even with advanced front airbags that automatically turn the passenger's front airbag off (see page 31), a back seat is the safest place for a small child.

If it is necessary to put a forward-facing child seat in the front, move the vehicle seat as far to the rear as possible, and be sure the child seat is firmly secured to the vehicle and the child is properly strapped in the seat.

⚠ WARNING

Placing a forward-facing child seat in the front seat can result in serious injury or death if the front airbag inflates.

If you must place a forward-facing child seat in front, move the vehicle seat as far back as possible, and properly restrain the child.

Selecting a Child Seat

When buying a child seat, you need to choose either a conventional child seat, or one designed for use with the Lower Anchors and Tethers for CHildren (LATCH) system.

Conventional child seats must be secured to a vehicle with a seat belt, whereas LATCH-compatible seats are secured by attaching the seat to hardware built into each rear seating position in the back seat.

Since LATCH-compatible child seats are easier to install and reduce the possibility of improper installation, we recommend selecting this style.

In seating positions and vehicles not equipped with LATCH, a LATCH-compatible child seat can be installed using a seat belt.

Whatever type of seat you choose, to provide proper protection, a child seat should meet three requirements:

1. ***The child seat should meet Federal Motor Vehicle Safety Standard 213 or Canadian Motor Vehicle Safety Standard 213.*** Look for FMVSS 213 or CMVSS 213 on the box.

2. ***The child seat should be of the proper type and size to fit the child.*** Rear-facing for infants, forward-facing for small children.

CONTINUED

Selecting a Child Seat, Installing a Child Seat

3. ***The child seat should fit the vehicle seating position (or positions) where it will be used.***

Before purchasing a conventional child seat, or using a previously purchased one, we recommend that you test the seat in the specific vehicle seating position or positions where the seat will be used.

Installing a Child Seat
After selecting a proper child seat and a good place to install the seat, there are three main steps in installing the seat:

1. ***Properly secure the child seat to the vehicle.*** All child seats must be secured to the vehicle with the lap part of a lap/shoulder belt or with the LATCH (Lower Anchors and Tethers for CHildren) system. A child whose seat is not properly secured to the vehicle can be endangered in a crash.

2. ***Make sure the child seat is firmly secured.*** After installing a child seat, push and pull the seat forward and from side-to-side to verify that it is secure.

A child seat secured with a seat belt should be installed as firmly as possible. However, it does not need to be “rock solid.” Some side-to-side movement can be expected and should not reduce the child seat’s effectiveness.

If the child seat is not secure, try installing it in a different seating position, or use a different style of child seat that can be firmly secured.

3. ***Secure the child in the child seat.*** Make sure the child is properly strapped in the child seat according to the child seat maker’s instructions. A child who is not properly secured in a child seat can be seriously injured in a crash.

The following pages provide guidelines on how to properly install a child seat. A forward-facing child seat is used in all examples, but the instructions are the same for rear-facing child seats.

Installing a Child Seat with LATCH

Your vehicle is equipped with LATCH (Lower Anchors and Tethers for CHildren) at the rear seats.

The lower anchors are located between the seat-back and seat bottom, and are to be used only with a child seat designed for use with LATCH.

The location of each lower anchor is indicated by a small button above the anchor point.

Whenever using the center tether anchor point, make sure to push down the head restraint to the lowest position, route the strap over the seat-back, then around the upper guide before attaching the tether strap hook to the center tether anchor (see page 48).

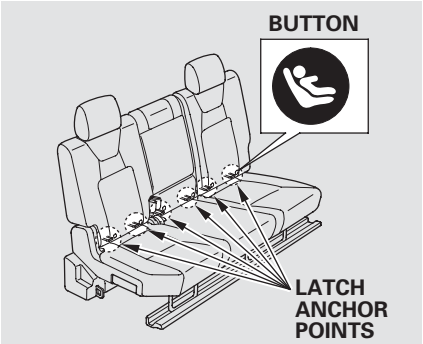

To install a LATCH-compatible child seat:

1. If needed, move the seat belt buckle or tongue away from the lower anchors.

2. Make sure there are no objects near the anchors that could prevent a secure connection between the child seat and the anchors.

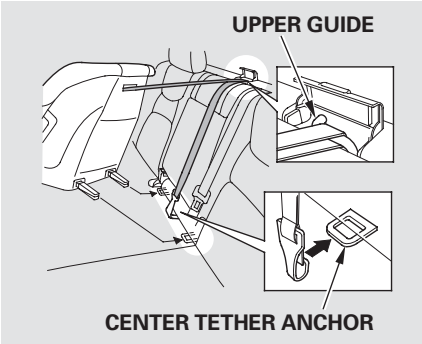

3. *On the center seating position*
   When using the tether strap on the child seat, attach the tether strap hook to the center tether anchor before installing the child seat to the lower anchors for the LATCH system, because the center tether anchor is positioned behind the child seat.

CONTINUED

Installing a Child Seat

Make sure the head restraint is in the lowest position. Lift the cover, then route the tether strap around the upper guide. Route the tether strap downward properly, making sure the strap is not twisted, then attach the strap hook to the center tether anchor.

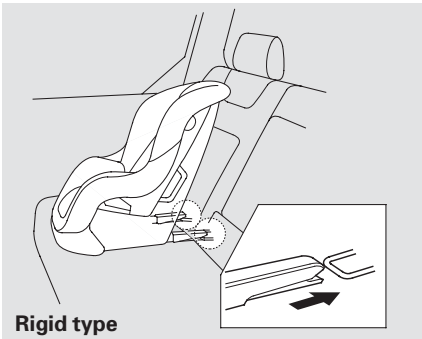

4. Place the child seat on the vehicle seat, then attach the seat to the lower anchors according to the child seat maker's instructions.

   Some LATCH-compatible seats have a rigid-type connector as shown above.

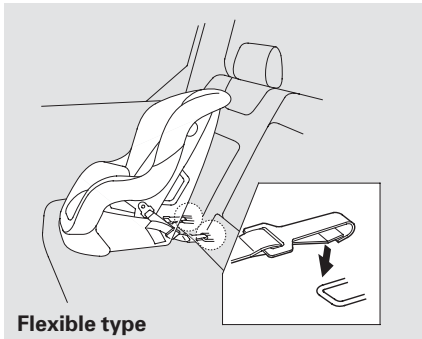

   Other LATCH-compatible seats have a flexible-type connector as shown above.

5. Whatever type you have, follow the child seat maker's instructions for adjusting or tightening the fit.

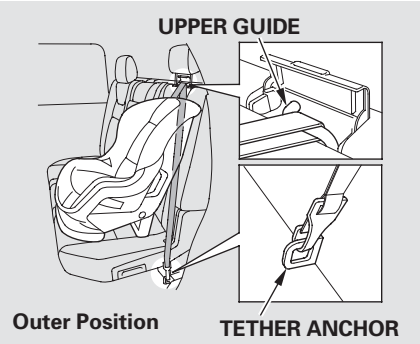

6. *On the outer seating position*
   Lift the head restraint (see page 123), then route the tether strap over the seat-back and through the head restraint legs.
   Lift the cover, then route the tether strap around the upper guide. Route the tether strap downward properly, making sure the strap is not twisted, then attach the strap hook to the tether anchor on the outside of the seat bottom (see page 48).

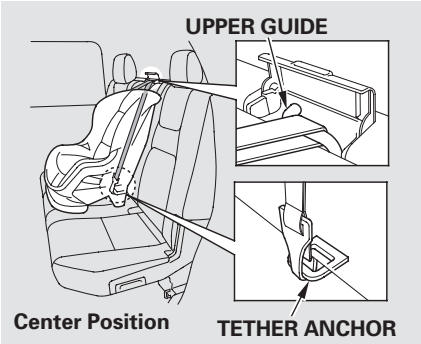

7. Tighten the strap according to the seat maker's instructions.

8. Push and pull the child seat forward and from side-to-side to verify that it is secure.

Installing a Child Seat

Installing a Child Seat with a Lap/ Shoulder Belt
When not using the LATCH system, all child seats must be secured to the vehicle with the lap part of a lap/ shoulder belt.

In addition, the lap/shoulder belts in all seating positions except the driver's have a lockable retractor that must be activated to secure a child seat.

If you intend to install the child seat in the rear center seating position and use the tether strap for additional security, make sure to push down the head restraint to the lowest position and hook the tether strap hook to the anchor before securing the child seat with the lap/ shoulder belt. Refer to page 48 for how to route the tether strap properly.

1. With the child seat in the desired seating position, route the belt through the child seat according to the seat maker's instructions, then insert the latch plate into the buckle and remove any slack from the lap portion of the belt.

2. To activate the lockable retractor, slowly pull the shoulder part of the belt all the way out until it stops, then let the belt feed back into the retractor.

3. After the belt has retracted, tug on it. If the belt is locked, you will not be able to pull it out. If you can pull the belt out, it is not locked, and you will need to repeat these steps.

4. After confirming that the belt is locked, grab the shoulder part of the belt near the buckle, and pull up to remove any slack from the lap part of the belt. Remember, if the lap part of the belt is not tight, the child seat will not be secure.

   To remove slack, it may help to put weight on the child seat, or push on the back of the seat while pulling up on the belt.

5. Push and pull the child seat forward and from side-to-side to verify that it is secure enough to stay upright during normal driving maneuvers. If the child seat is not secure, unlatch the belt, allow it to retract fully, then repeat these steps.

To deactivate the lockable retractor and remove a child seat, unlatch the buckle, unroute the seat belt, and let the belt fully retract.

Installing a Child Seat

Installing a Child Seat with a Tether

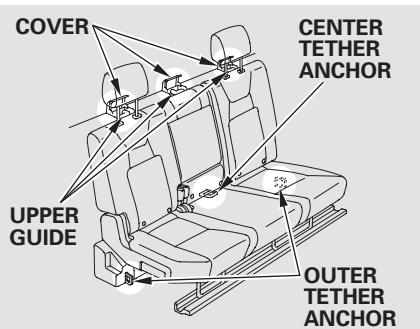

A child seat with a tether can be installed in any seating position in the back seat.
Each outer seating position has a tether anchor at the outside of the seat bottom. The center seating position has a tether anchor between the lower anchors for the LATCH-compatible child seat. Each anchor point is shown above.

When using a tether anchor, always hook the tether strap through the upper guide to route it properly.

Since a tether can provide additional security to the lap/shoulder belt installation, we recommend using a tether whenever one is required or available.

Using an Outer Tether Anchor

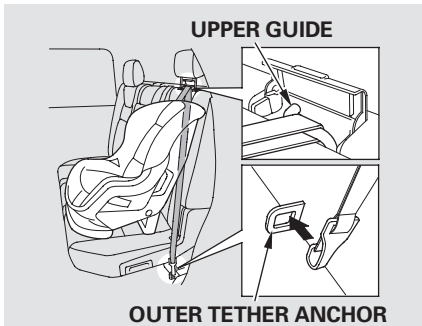

1. After properly securing the child seat (see page 46), lift the head restraint, then route the tether strap over the seat-back and through the head restraint legs.

2. Lift the cover, then hook the tether strap through the upper guide as shown.

3. Route the tether strap downward properly, making sure the strap is not twisted.

4. Attach the tether strap hook to the outer tether anchor on the outside of the seat bottom.

5. Tighten the strap according to the seat maker's instructions.

Using the Center Tether Anchor

Make sure to attach the tether strap hook to the anchor before installing the child seat, because the tether anchor is positioned behind the child seat.

1. Place the child seat on the rear seat.

2. Push down the rear center head restraint to the lowest position.

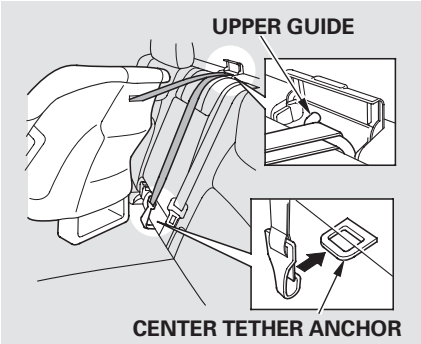

3. Route the tether strap over the seat-back, lift the cover, then hook the tether strap through the upper guide as shown.

4. Route the tether strap downward properly along the seat-back, making sure the strap is not twisted.

CONTINUED

Installing a Child Seat

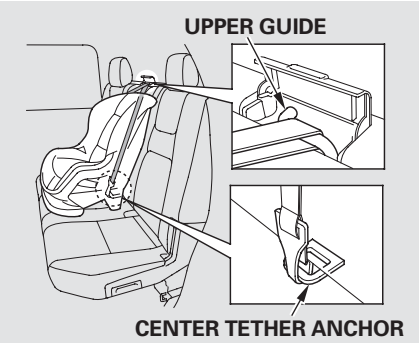

5. Attach the tether strap hook to the center tether anchor between the lower anchors for the LATCH-compatible child seat.

6. Properly secure the child seat (see page 46), then tighten the tether strap according to the seat maker's instructions.

Whenever using the tether strap, make sure to route the strap through the upper guide before attaching the tether strap hook to the tether anchor. If the tether strap is not routed properly and secured, the child seat may not be secured. This could lead to serious injury or death.

When a child reaches the recommended weight or height limit for a forward-facing child seat, the child should sit in a back seat on a booster seat and wear the lap/shoulder belt.

The following pages give instructions on how to check proper seat belt fit, what kind of booster seat to use if one is needed, and important precautions for a child who must sit in front.

⚠ WARNING

Allowing a child age 12 or under to sit in front can result in injury or death if the passenger's front airbag inflates.

If a child must ride in front, move the vehicle seat as far back as possible, use a booster seat if needed, have the child sit up properly and wear the seat belt properly.

Checking Seat Belt Fit

To determine if a lap/shoulder belt properly fits a child, have the child put on the seat belt, then ask yourself:

1. Does the child sit all the way back against the seat?

2. Do the child's knees bend comfortably over the edge of the seat?

CONTINUED

Protecting Larger Children

3. Does the shoulder belt cross between the child's neck and arm?

4. Is the lap part of the belt as low as possible, touching the child's thighs?

5. Will the child be able to stay seated like this for the whole trip?

If you answer yes to all these questions, the child is ready to wear the lap/shoulder belt correctly. If you answer no to any question, the child needs to ride on a booster seat.

Using a Booster Seat

A child who has outgrown a forward-facing child seat should ride in a back seat and use a booster seat until the lap/shoulder belt fits them properly without the booster.

Some states, Canadian provinces and territories also require children to use a booster seat until they reach a given age or weight (e.g., 6 years or 60 lbs). Be sure to check current laws in the states, provinces and territories where you intend to drive.

Booster seats can be high-back or low-back. Whichever style you select, make sure the booster seat meets federal safety standards (see page 41) and that you follow the booster seat maker's instructions.

If a child who uses a booster seat must ride in front, move the vehicle seat as far back as possible and be sure the child is wearing the seat belt properly.

A child may continue using a booster seat until the tops of their ears are even with the top of the vehicle's or booster's seat-back. A child of this height should be tall enough to use the lap/shoulder belt without a booster seat.

When Can a Larger Child Sit in Front

The National Highway Traffic Safety Administration and Transport Canada recommend that all children age 12 and under be properly restrained in the back seat.

If the passenger's front airbag inflates in a moderate to severe frontal collision, the airbag can cause serious injuries to a child who is unrestrained, improperly restrained, sitting too close to the airbag, or out of position.

A side airbag also poses risks. If any part of a larger child's body is in the path of a deploying side airbag, the child could receive possibly serious injuries.

Of course, children vary widely. And while age may be one indicator of when a child can safely ride in front, there are other important factors you should consider.

Physical Size

Physically, a child must be large enough for the lap/shoulder belt to properly fit (see pages 16 and 51). If the seat belt does not fit properly, with or without the child sitting on a booster seat, the child should not sit in front.

Maturity

To safely ride in front, a child must be able to follow the rules, including sitting properly, and wearing the seat belt properly throughout a ride.

If you decide that a child can safely ride up front, be sure to:

- Carefully read the owner's manual, and make sure you understand all seat belt instructions and all safety information.
- Move the vehicle seat to the rear-most position.
- Have the child sit up straight, back against the seat, and feet on or near the floor.
- Check that the child's seat belt is properly and securely positioned.
- Supervise the child. Even a mature child sometimes needs to be reminded to fasten the seat belt or sit properly.

Protecting Larger Children

Additional Safety Precautions

- ***Do not let a child wear a seat belt across the neck.*** This could result in serious neck injuries during a crash.

- ***Do not let a child put the shoulder part of a seat belt behind the back or under the arm.*** This could cause very serious injuries during a crash. It also increases the chance that the child will slide under the belt in a crash and be injured.

- ***Two children should never use the same seat belt.*** If they do, they could be very seriously injured in a crash.

- ***Do not put any accessories on a seat belt.*** Devices intended to improve a child's comfort or reposition the shoulder part of a seat belt can make the belt less effective and increase the chance of serious injury in a crash.

Carbon Monoxide Hazard

Your vehicle's exhaust contains carbon monoxide gas. Carbon monoxide should not enter the vehicle in normal driving if you maintain your vehicle properly and follow the information on this page.

Have the exhaust system inspected for leaks whenever:

- The vehicle is raised for an oil change.
- You notice a change in the sound of the exhaust.
- The vehicle was in a crash that may have damaged the underside.

⚠ WARNING

Carbon monoxide gas is toxic. Breathing it can cause unconsciousness and even kill you.

Avoid any enclosed areas or activities that expose you to carbon monoxide.

High levels of carbon monoxide can collect rapidly in enclosed areas, such as a garage. Do not run the engine with the garage door closed. Even with the door open, run the engine only long enough to move the vehicle out of the garage.

With a truck cap installed and the back window open, engine exhaust may enter the vehicle and cause a hazardous condition. Keep the back window tightly closed whenever you drive with a truck cap installed.

If you must sit in your parked vehicle with the engine running, even in an unconfined area, adjust the heating and cooling system/climate control system as follows:

1. Select the fresh air mode.
2. Select the mode.
3. Turn the fan on high speed.
4. Set the temperature control to a comfortable setting.

Safety Labels

These labels are in the locations shown. They warn you of potential hazards that could cause serious injury or death. Read these labels carefully.

If a label comes off or becomes hard to read (except for the U.S. dashboard label which may be removed by the owner), contact your dealer for a replacement.

DASHBOARD

U.S. models only

This Vehicle is Equipped with Advanced Air Bags

Even with Advanced Air Bags

Children can be killed or seriously injured by the air bag.
The back seat is the safest place for children.
Never put a rear-facing child seat in the front.
Always use seat belts and child restraints.
See owner's manual for more information about air bags.

To be removed by owner only.

SUN VISORS

U.S. models

AIR BAG WARNING

FLIP VISOR OVER

WARNING

EVEN WITH ADVANCED AIR BAGS

- Children can be killed or seriously injured by the air bag
- The back seat is the safest place for children
- Never put a rear-facing child seat in the front
- Always use seat belts and child restraints
- See owner's manual for more information about air bags

Canadian models

CAUTION
TO AVOID SERIOUS INJURY:
- FOR MAXIMUM SAFETY PROTECTION IN ALL TYPES OF CRASHES, YOU MUST ALWAYS WEAR YOUR SAFETY BELT.
- DO NOT INSTALL REARWARD-FACING CHILD SEATS IN ANY FRONT PASSENGER SEAT POSITION.
- DO NOT SIT OR LEAN UNNECESSARILY CLOSE TO THE AIR BAG.
- DO NOT PLACE ANY OBJECTS OVER THE AIR BAG OR BETWEEN THE AIR BAG AND YOURSELF.
- SEE THE OWNER'S MANUAL FOR FURTHER INFORMATION AND EXPLANATIONS.

PRÉCAUTION:
POUR EVITER DES BLESSURES GRAVES:
- POUR PROFITER D'UNE PROTECTION MAXIMALE LORS D'UNE COLLISION, BOUCLEZ TOUJOURS VOTRE CEINTURE DE SECURITE.
- N'INSTALLEZ JAMAIS UN SIEGE POUR ENFANTS FAISANT FACE A L'ARRIERE SUR LE SIEGE DU PASSAGER AVANT.
- NE VOUS APPUYEZ PAS ET NE VOUS ASSEYEZ PAS PRES DU COUSSIN GONFLABLE.
- NE DEPOSEZ AUCUN OBJET SUR LE COUSSIN GONFLABLE OU ENTRE LE COUSSIN GONFLABLE ET VOUS.
- LISEZ LE GUIDE UTILISATEUR POUR DE PLUS AMPLES RENSEIGNEMENTS.

RADIATOR CAP

DANGER
WARNUNG
危 険

▶ NEVER OPEN WHEN HOT.
Hot coolant will scald you.
▶ N'OUVREZ PAS QUAND CHAUD.
▶ NICHT BEI HEISSEM MOTOR OFFNEN.
▶熱い時あけないで下さい。
▶高温时，请勿打开。

1.1

SUN VISOR

U.S. models only

WARNING: HIGHER ROLLOVER RISK

Avoid Abrupt Maneuvers and Excessive Speed.

Always Buckle Up.

See Owner's Manual For Further Information.

DOORJAMBS

U.S. models

SIDE AIRBAG

- This car is equipped with side airbags in the front seats and side curtain airbags.
- Do not lean against the door.
- See owner's manual for more information.

Canadian models

SIDE AIRBAG

- This car is equipped with side airbags in the front seats and side curtain airbags.
- Do not lean against the door.
- See owner's manual for more information.

COUSSIN GONFLABLE LATERAL

- Cette automobile est équipée de coussins gonflables latéraux dans les sièges avant ainsi que de coussins gonflables latéraux de type rideau.
- Ne vous appuyez pas sur la porte.
- Consultez le Manuel du propriétaire pour en savoir plus.

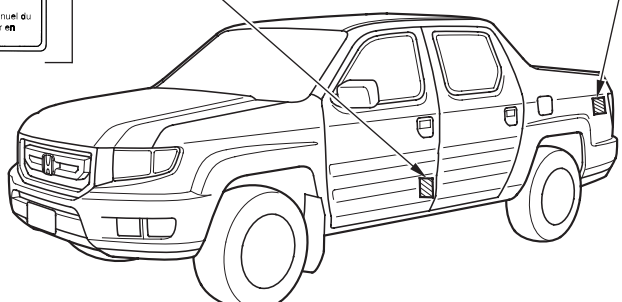

PICKUP BED

U.S. models

⚠ WARNING

DO NOT FILL A PORTABLE FUEL CONTAINER IN THE TRUCK BED.

STATIC ELECTRICITY CAN IGNITE GAS VAPORS AND YOU CAN BE BURNED.

ALWAYS PLACE CONTAINER ON THE GROUND BEFORE FILLING.

SEE OWNER'S MANUAL FOR COMPLETE INSTRUCTIONS.

Canadian models

⚠ WARNING

DO NOT FILL A PORTABLE FUEL CONTAINER IN THE TRUCK BED.

STATIC ELECTRICITY CAN IGNITE GAS VAPORS AND YOU CAN BE BURNED.

ALWAYS PLACE CONTAINER ON THE GROUND BEFORE FILLING.

SEE OWNER'S MANUAL FOR COMPLETE INSTRUCTIONS.

⚠ ATTENTION

NE PAS REMPLIR UN BIDON D'ESSENCE DANS L'ESPACE CARGO.

L'ELECTRICITE STATIQUE PEUT ENFLAMMER LES VAPEURS D'ESSENCE ET VOUS BRULER.

TOUJOURS METTRE LE BIDON D'ESSENCE AU SOL AVANT REMPLISSAGE.

POUR PLUS AMPLES RENSEIGNEMENTS, CONSULTER LE MANUEL DU PROPRIETAIRE.

Table of Contents

This section gives information about the controls and displays that contribute to the daily operation of your vehicle. All the essential controls are within easy reach.

Control Locations 60
Instrument Panel 61
Instrument Panel Indicators..... 62
Gauges 76
Multi-Information Display 82
Controls Near the Steering Wheel 93
Multi-Control Lever..... 94
Headlights..... 95
Headlight Control Dial..... 95
Fog Lights..... 97
Instrument Panel Brightness 98
Hazard Warning Button..... 99
Steering Wheel Adjustment 99
Keys..... 100
Immobilizer System..... 101
Ignition Switch 102
Door Locks..... 103
Childproof Door Locks 104
Auto Door Locking/ Unlocking 104
Remote Transmitter..... 110
Dual-Action Tailgate..... 113
In-Bed Trunk® 116
Seats 119
Seat Heaters 126
Power Windows 128
Moonroof 131
Parking Brake 132
Mirrors..... 133
Interior Convenience Items..... 135
Center Console 136
Console Compartments 136
Cargo Hooks 137
Beverage Holders..... 137
Glove Box 138
Coat Hooks..... 138
Sunglasses Holder 138
Accessory Power Sockets..... 139
Sun Visor 140
Vanity Mirror 140
AC Power Outlet.....141
Interior Lights..... 142
Bed Lights 144

Control Locations

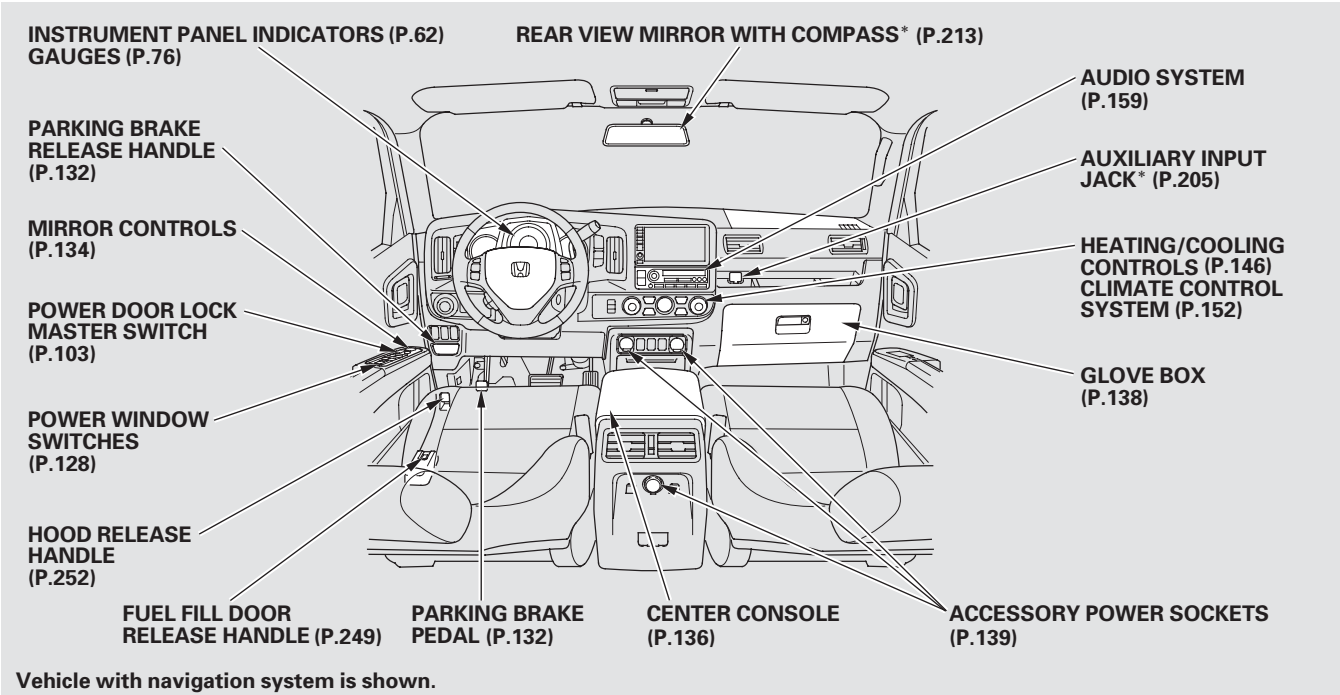

Vehicle with navigation system is shown.

* : If equipped

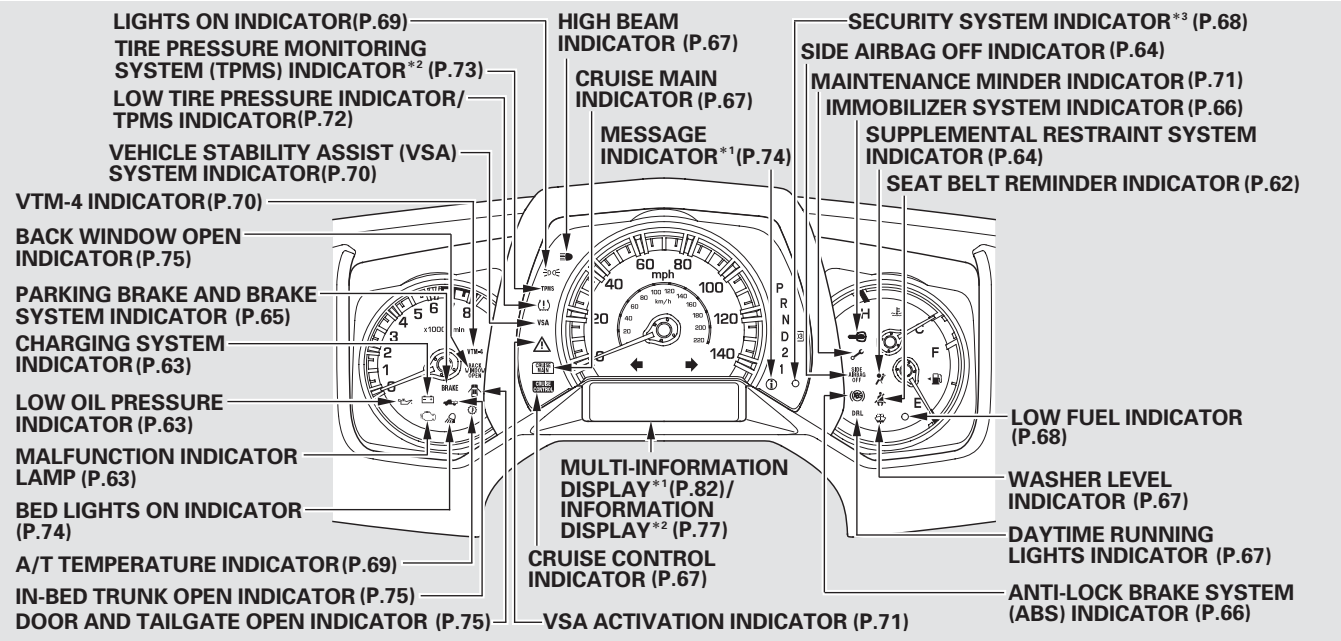

The U.S. instrument panel is shown. Differences for the Canadian models are noted in the text.

∗1 : On models with navigation system.

∗2 : On models without navigation system.

∗3 : On RTS, RTL models, and Canadian EX-L models.

Instrument Panel Indicators

The instrument panel has many indicators to give you important information about your vehicle.

Seat Belt Reminder Indicator

This indicator comes on when you turn the ignition switch to the ON (II) position. It reminds you and your passengers to fasten your seat belts. A beeper also sounds if you have not fastened your seat belt.

If you turn the ignition switch to the ON (II) position before fastening your seat belts, the beeper sounds, and the indicator flashes. If you do not fasten your seat belts before the beeper stops, the indicator stops flashing but remains on.

If your front passenger does not fasten their seat belt, the indicator comes on about 6 seconds after the ignition switch is turned to the ON (II) position.

If either of you do not fasten your seat belt while driving, the beeper will sound and the indicator will flash again at regular intervals. For more information, see page 20 .

On models with navigation system
You will also see a “FASTEN SEAT BELT” or “FASTEN PASSENGER SEAT BELT” message on the multi-information display (see page 90).

For more information, see page 20 .

Malfunction Indicator Lamp

For more information, see page 375 .

On models with navigation system
You will also see a “CHECK EMISSION SYSTEM” message on the multi-information display (see page 90). For more information, see page 375 .

Low Oil Pressure Indicator

The engine can be severely damaged if this indicator flashes or stays on when the engine is running. For more information, see page 374 .

On models with navigation system
You will also see a “CHECK ENGINE OIL LEVEL” message on the multi-information display (see page 91).

Charging System Indicator

If this indicator comes on when the engine is running, the battery is not being charged. For more information, see page 374 .

On models with navigation system
You will also see a “CHECK CHARGING SYSTEM” message on the multi-information display (see page 90).

Instrument Panel Indicators

Supplemental Restraint System Indicator

This indicator comes on for several seconds when you turn the ignition switch to the ON (II) position. If it comes on at any other time, it indicates a potential problem with your front airbags. This indicator will also alert you to a potential problem with your side airbags, passenger's side airbag automatic cutoff system, side curtain airbags, rollover sensor, automatic seat belt tensioners, driver's seat position sensor, or the front passenger's weight sensors. For more information, see page 30 .

On models with navigation system
You will also see a "CHECK AIRBAG SYSTEM" message on the multi-information display (see page 90).

U.S. Canada

Side Airbag Off Indicator

This indicator comes on for several seconds when you turn the ignition switch to the ON (II) position. If it comes on at any other time, it indicates that the passenger's side airbag has automatically shut off. For more information, see page 31 .

On models with navigation system
You will also see a "PASSENGER SIDE AIRBAG OFF" message on the multi-information display (see page 90).

U.S. BRAKE | Canada (!)

Parking Brake and Brake System Indicator

This indicator has two functions:

1. It comes on when you turn the ignition switch to the ON (II) position. It is a reminder to check the parking brake. A beeper sounds if you drive with the parking brake not fully released. Driving with the parking brake not fully released can damage the brakes and tires.

On models with navigation system
You will also see a “RELEASE PARKING BRAKE” message on the multi-information display (see page 90).

2. If it stays on after you have fully released the parking brake while the engine is running, or if it comes on while driving, there could be a problem with the brake system. For more information, see page 376 .

On models with navigation system
You will also see a “BRAKE FLUID LOW” or “CHECK BRAKE SYSTEM” message on the multi-information display (see page 90).

Instrument Panel Indicators

Anti-lock Brake System (ABS) Indicator

This indicator normally comes on for a few seconds when you turn the ignition switch to the ON (II) position, and when the ignition switch is turned to the START (III) position. If it comes on at any other time, there is a problem with the ABS. If this happens, have your vehicle checked at a dealer. With the indicator on, your vehicle still has normal braking ability but no anti-lock brakes. For more information, see page 289 .

On models with navigation system
You will also see a “CHECK ABS SYSTEM” message on the multi-information display (see page 91).

Immobilizer System Indicator

This indicator comes on for a few seconds when you turn the ignition switch to the ON (II) position. It will go off if you have inserted a properly coded ignition key. If it is not a properly coded key, the indicator will blink and the engine will not start (see page 101).

This indicator also blinks several times when you turn the ignition switch from the ON (II) position to the ACCESSORY (I) or LOCK (0) position.

Turn Signal and Hazard Warning Indicators

The left or right turn signal indicator blinks when you signal a lane change or turn. If an indicator does not blink or blinks rapidly, it usually means one of the turn signal bulbs is burned out (see pages 338 and 340). Replace the bulb as soon as possible, since other drivers cannot see that you are signaling.

When you press the hazard warning button, both turn signal indicators and all turn signals on the outside of the vehicle flash.

Daytime Running Lights Indicator

If this indicator comes on when the ignition switch is turned to the ON (II) position and the parking brake is released, it means there is a problem with a circuit. Have your vehicle checked by your dealer.

On models with navigation system
If you see a “CHECK DRL SYSTEM” message on the multi-information display, there is a problem with the daytime running light circuit. Take your vehicle to a dealer to have it checked.

High Beam Indicator

This indicator comes on with the high beam headlights. For more information, see page 95 .

Cruise Main Indicator

This indicator comes on when you turn on the cruise control system by pressing the CRUISE button (see page 210).

Cruise Control Indicator

This indicator comes on when you set the cruise control. See page 210 for information on operating the cruise control.

Washer Level Indicator

This indicator comes on when the washer fluid level is low. Add washer fluid when you see this indicator (see page 330).

On models with navigation system
You will see a “WASHER FLUID LOW” message on the multi-information display (see page 91).

Instrument Panel Indicators

Low Fuel Indicator

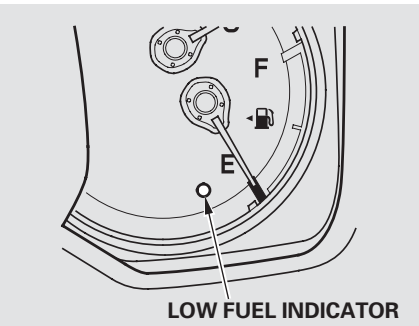

This indicator comes on as a reminder that you must refuel soon.

When the indicator comes on, there are about 3.3 U.S. gal (12.5 ℓ) of fuel remaining in the tank.

When the needle reaches E, there is a very small amount of fuel in the tank.

On models with navigation system
You will also see a "FUEL LOW" message on the multi-information display.

Security System Indicator

On RTS, RTL models, and Canadian EX-L models

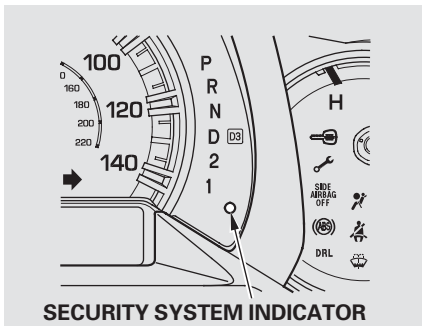

This indicator comes on when the security system is set. See page 208 for more information on the security system.

Lights On Indicator

This indicator reminds you that the exterior lights are on. It comes on when you turn the headlight control dial to either the ≡DOC≡ or ≡D position.

If you turn the ignition switch to the ACCESSORY (I) or LOCK (0) position without turning off the headlight control dial, this indicator remains on. A reminder chime will also sound when you open the driver's door.

A/T Temperature Indicator

This indicator monitors the temperature of the automatic transmission fluid. It should come on for a few seconds when you turn the ignition switch to the ON (II) position. If it comes on while driving, it means the transmission fluid temperature is too high. Pull to the side of the road when it is safe, shift to Park, and let the engine idle until the indicator goes out.

On models with navigation system
You will also see an "A/T TEMP HIGH" message on the multi-information display (see page 91).

NOTICE

Continuing to drive with the A/T temperature indicator on may cause serious damage to the transmission.

Instrument Panel Indicators

VTM-4

VTM-4 Indicator

This indicator normally comes on for a few seconds when you turn the ignition switch to the ON (II) position. If it comes on at any other time, there is a problem in the 4WD system. Take the vehicle to your dealer to have it checked.

If the indicator blinks while driving, the VTM-4 fluid temperature is too high. Pull to the side of the road when it is safe, shift to Park, and let the engine idle until the indicator goes out.

NOTICE

Continuing to drive with the VTM-4 indicator blinking may cause serious damage to the system.

VSA

Vehicle Stability Assist (VSA) System Indicator

This indicator normally comes on for a few seconds when you turn the ignition switch to the ON (II) position.

If it comes on and stays on at any other time, or if it does not come on when you turn the ignition switch to the ON (II) position, there is a problem with the VSA system. Take your vehicle to a dealer to have it checked. Without VSA, your vehicle still has normal driving ability, but will not have VSA traction and stability enhancement. See page 291 for more information on the VSA system.

On models with navigation system
You will also see a “CHECK VSA SYSTEM” message on the multi-information display (see page 91).

VSA Activation Indicator

This indicator normally comes on for a few seconds when you turn the ignition switch to the ON (II) position. For more information, see page 291.

This indicator has three functions:

1. It comes on as a reminder that you have turned off the vehicle stability assist (VSA) system.

2. It flashes when VSA is active (see page 291).

3. It comes on along with the VSA system indicator if there is a problem with the VSA system.

On models with navigation system
You will also see a "CHECK VSA SYSTEM" message on the multi-information display (see page 91).

Maintenance Minder Indicator

This indicator comes on for a few seconds when you turn the ignition switch to the ON (II) position. It reminds you that it is time to take your vehicle in for scheduled maintenance. The maintenance main items and sub items will be displayed in the information display. See page 313 for more information on the maintenance minder.

This indicator goes off when your dealer resets it after completing the required maintenance service.

Instrument Panel Indicators

Low Tire Pressure Indicator

On models without navigation system

This indicator normally comes on for a few seconds when you turn the ignition switch to the ON (II) position.

If it comes on while driving, it indicates that one or more of your vehicle's tires are significantly low on pressure.

If this happens, pull to the side of the road when it is safe, check which tire has lost the pressure on the tire pressure monitor, and determine the cause. If it is because of a flat tire, replace the flat tire with the compact spare (see page 361), and have the flat tire repaired as soon as possible. If two or more tires are underinflated, call a professional towing service (see page 383). Refer to page 278 for more information.

Low Tire Pressure/ TPMS Indicator

On models with navigation system

This indicator normally comes on for a few seconds when you turn the ignition switch to the ON (II) position.

This indicator has two functions:

1. If it comes on while driving, it indicates that one or more of your vehicle's tires are significantly low on pressure.

   You will also see a "CHECK TIRE PRESSURE" message on the multi-information display (see page 91).

   Check the tire pressure monitor on the multi-information display and determine the cause (see page 282).

If this happens, pull to the side of the road when it is safe, check which tire has lost pressure on the multi-information display, and determine the cause. If it is because of a flat tire, have the flat tire repaired as soon as possible. If two or more tires are underinflated, call a professional towing service. For more information, see page 383 .

2. If this indicator begins to flash, there is a problem with the tire pressure monitoring system (TPMS). You will also see a "CHECK TPMS SYSTEM" message on the multi-information display. The indicator continues to flash for a while (approximately 1 minute), then stays on. If this happens, have your dealer check the system as soon as possible. For more information, see page 284 .

TPMS **Tire Pressure Monitoring System (TPMS) Indicator**

On models without navigation system

This indicator normally comes on for a few seconds when you turn the ignition switch to the ON (II) position.

If this indicator comes on and stays on at any other time, or if it does not come on when you turn the ignition switch to the ON (II) position, there is a problem with the TPMS. With this indicator on, the low tire pressure indicator and the tire pressure monitor will not come on when a tire loses pressure. Take the vehicle to your dealer to have the system checked.

Instrument Panel Indicators

Message Indicator

On models with navigation system
This indicator comes on when there is a system message on the multi-information display. Press the INFO button on the dashboard (see page 82) to see the message (see page 90).

Most of the time, this indicator comes on along with other indicators in the instrument panel such as the seat belt reminder indicator, SRS indicator, VSA system indicator, etc.

Bed Lights On Indicator

This indicator reminds you that the bed lights are on. With the shift lever in the Park position, they come on when you push the light switch on the dashboard, swing open the tailgate, or open the In-Bed Trunk.

If you turn the ignition switch to the ACCESSORY (I) or LOCK (0) position without turning off the bed lights, this indicator will remain on, and then go off after 20 minutes. See page 144 for more information.

In-Bed Trunk Open Indicator

This indicator reminds you that the In-Bed Trunk is open. If you do not close it, the indicator stays on for about 3 minutes. See page 116 for more information.

Door and Tailgate Open Indicator

This indicator comes on if any door or the tailgate is not closed tightly.

Back Window Open Indicator

This indicator reminds you that the back window is not completely closed when you turn the ignition switch from the ON (II) position to the ACCESSORY (I) or LOCK (0) position. With the ignition switch in the ACCESSORY (I) position, it goes off after about 30 seconds. With the ignition switch in the LOCK (0) position, it goes off after about 3 minutes.

If you remove the ignition key, turn off the lights, and open the driver's door without closing the back window, you will hear five beeps and see the indicator blink. If you do not close the back window before the beeper stops, the indicator stops blinking but remains on. It will go off after about 3 minutes. See page 129 for more information.

Gauges

On models without navigation system

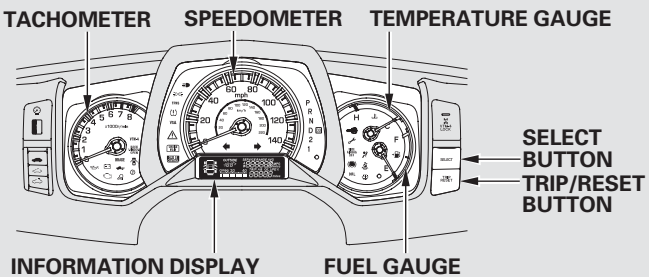

On models with navigation system

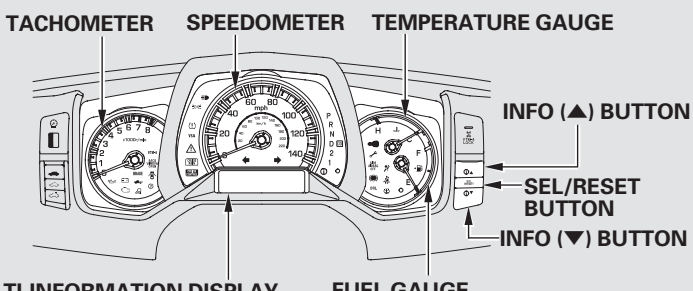

U.S. model is shown.

Temperature Gauge
This shows the temperature of the engine's coolant. During normal operation, the pointer should rise to about the middle of the gauge. In severe driving conditions, the pointer may rise to the upper zone. If it reaches the red (hot) mark, pull safely to the side of the road. For instructions and precautions on checking the engine's cooling system, see page 372.

Fuel Gauge
This shows how much fuel you have. It may show slightly more or less than the actual amount.

NOTICE

Avoid driving with an extremely low fuel level. Running out of fuel could cause the engine to misfire, damaging the catalytic converter.

Information Display

On models without navigation system

The information display shows the odometer, trip meter, engine oil life, outside temperature (if equipped), instant fuel economy, average fuel economy, range (estimated distance), and maintenance item code(s).

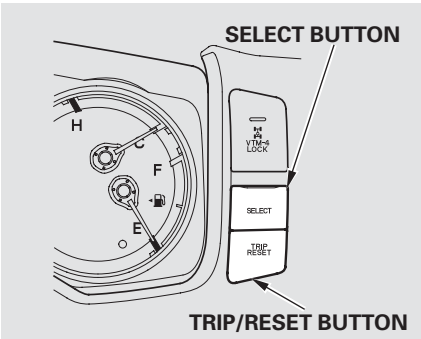

With the ignition switch in the ON (II) position, the information display changes as shown on the next page each time you press the SELECT button or TRIP/RESET button.

When you turn the ignition switch to the ON (II) position, your last selection display.

On models with navigation system

For information about the multi-information display, see page 82 .

CONTINUED

Gauges

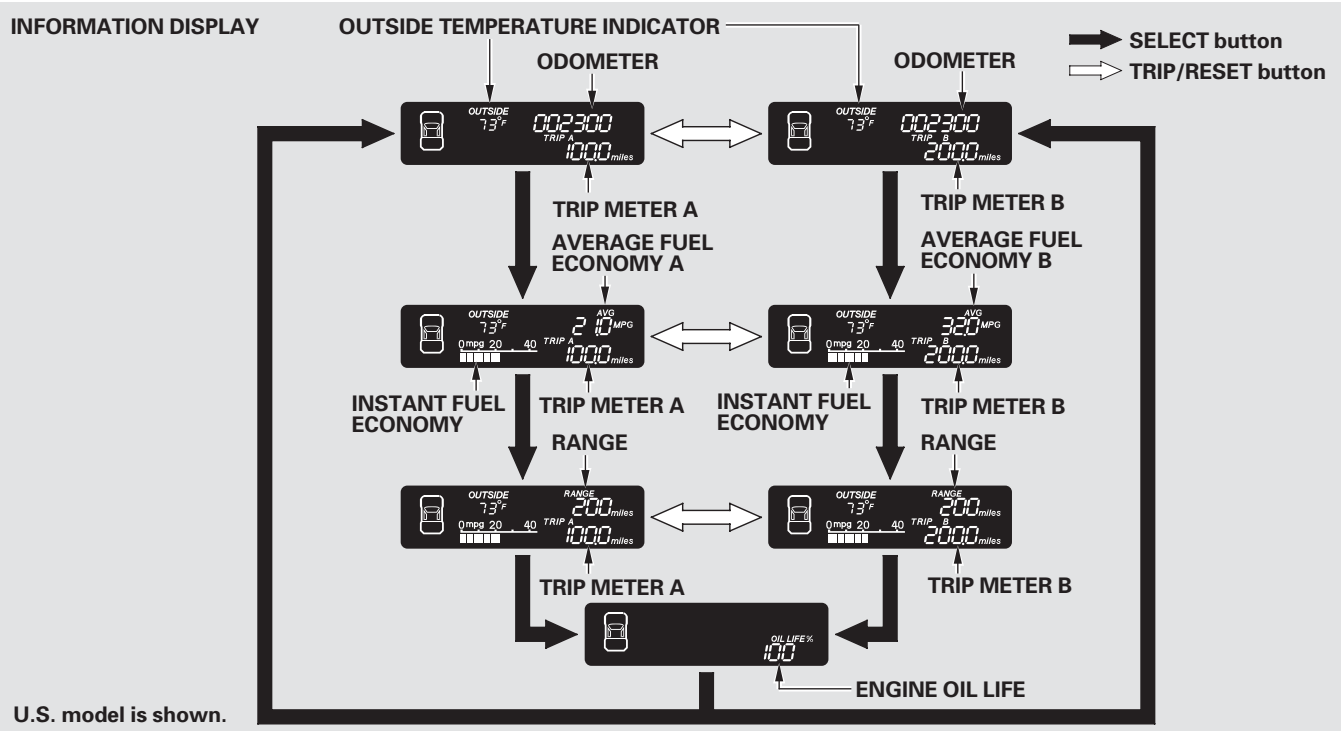

U.S. model is shown.

Odometer
The odometer shows the total distance your vehicle has been driven. It measures miles in U.S. models and kilometers in Canadian models. It is illegal under U.S. federal law and Canadian provincial/territorial regulations to disconnect, reset, or alter the odometer with the intent to change the number of miles or kilometers indicated.

Trip Meter
This meter shows the number of miles (U.S.) or kilometers (Canada) driven since you last reset it.
There are two trip meters: Trip A and Trip B. Switch between these displays by pressing the TRIP/RESET button repeatedly.
Each trip meter works independently, so you can keep track of two different distances. To reset a trip meter, display it, and then press and hold the TRIP/RESET button until the number resets to “0.0”.

Both trip meters will reset if the vehicle’s battery goes dead or is disconnected.

Outside Temperature Indicator
Except RT models
This shows the outside temperature in Fahrenheit (U.S. models), or in Celsius (Canadian models).

The temperature sensor is in the front bumper. The temperature reading can be affected by heat reflection from the road surface, engine heat, and the exhaust from surrounding traffic. This can cause an incorrect temperature reading when your vehicle speed is under 19 mph (30 km/h). When you start your trip, the sensor is not fully acclimatized, therefore it may take several minutes until the proper temperature is displayed.

In certain weather conditions, temperature readings near freezing (32°F, 0°C) could mean that ice is forming on the road surface.

If the outside temperature is incorrectly displayed, you can adjust it up to ±5°F in U.S. models (±3°C in Canadian models) warmer or cooler.

NOTE: The temperature must be stabilized before doing this procedure.

To adjust the outside temperature indicator, press and hold the TRIP/RESET button for 10 seconds. The following sequence will appear for 1 second each: 0, 1, 2, 3, 4, 5, −5, −4, −3, −2, −1, 0 (U.S.) or 0, 1, 2, 3, −3, −2, −1, 0 (Canada).

When the temperature reaches the desired value, release the TRIP/RESET button. You should see the new outside temperature displayed.

CONTINUED

Gauges

Tire Pressure Monitor

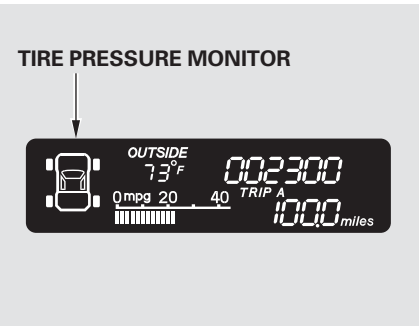

The appropriate tire indicator will come on along with the low tire pressure indicator if a tire is significantly underinflated or has suddenly lost pressure. See **Low Tire Pressure Indicator** for what to do if this indicator comes on.

On models with navigation system
This indicator is displayed as the system message on the multi-information display (see page 282).

Instant Fuel Economy
This display shows the instant fuel economy you are getting.

It shows the number of mpg (U.S.) or l/100 km (Canada).

Average Fuel Economy
When either of the trip meters (trip A or B) is displayed, your vehicle's average fuel economy since you last reset that trip meter can be shown on the information display (mpg on U.S. models and l/100 km on Canadian models). This number is updated once per 10 seconds. To see the average fuel economy, press and release the TRIP/RESET button repeatedly.

The average fuel economy will be reset when you reset the trip meter, or if the vehicle's battery goes dead or is disconnected.

Range (Estimated Distance)
This display shows the estimated distance you can travel on the fuel remaining in the tank.

This distance is estimated from the fuel economy you have achieved over the last few miles (kilometers), so it will vary with changes in speed, traffic condition, etc.

Maintenance Minder

The information display in the instrument panel shows you the engine oil life and maintenance service items when the ignition switch is in the ON (II) position. This information helps to keep you aware of the periodic maintenance your vehicle needs for continued trouble-free driving. Refer to page 313 for more information.

Check Fuel Cap Message

Your vehicle's onboard diagnostic system will detect a loose or missing fuel fill cap as an evaporative system leak. The first time a leak is detected a "CHECK FUEL CAP" message appears on the information display.

Turn the engine off, and confirm the fuel fill cap is installed. If it is, loosen it, then retighten it until it clicks at least once. The message should go off after several days of normal driving once you tighten or replace the fuel fill cap. To scroll to another display, press the SELECT button or TRIP/RESET button.

The "CHECK FUEL CAP" message will appear each time you restart the engine until the system turns the message off.

If the system still detects a leak in your vehicle's evaporative emissions system, the malfunction indicator lamp (MIL) comes on. If the fuel fill cap was not already tightened, turn the engine off, and check or retighten the fuel fill cap until it clicks at least once. The MIL should go off after several days of normal driving once the cap is tightened or replaced. If the MIL does not go off, have your vehicle inspected by a dealer. For more information, see page 375 .

Multi-Information Display

On models with navigation system
The multi-information display in the instrument panel displays various information and messages when the ignition switch is in the ON (II) position. Some of the messages help you operate your vehicle more comfortably. Others help to keep you aware of the periodic maintenance your vehicle needs for continued trouble-free driving.

When you open the driver's door, a "Welcome" message is shown on the multi-information display.

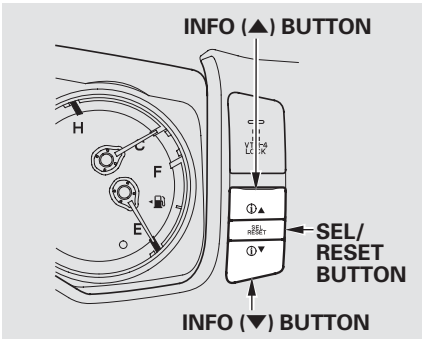

To change the display, press the INFO (▲/▼) button on the dashboard repeatedly until the main menu appears (see page 83).

With the ignition switch in the ON (II) position, the multi-information display changes as shown on the next page each time you press the INFO (▲/▼) button or the SEL/ RESET button.

When you turn the ignition switch to the ON (II) position, your last selection is displayed.

In the multi-information display, the system message is also displayed (see page 90).

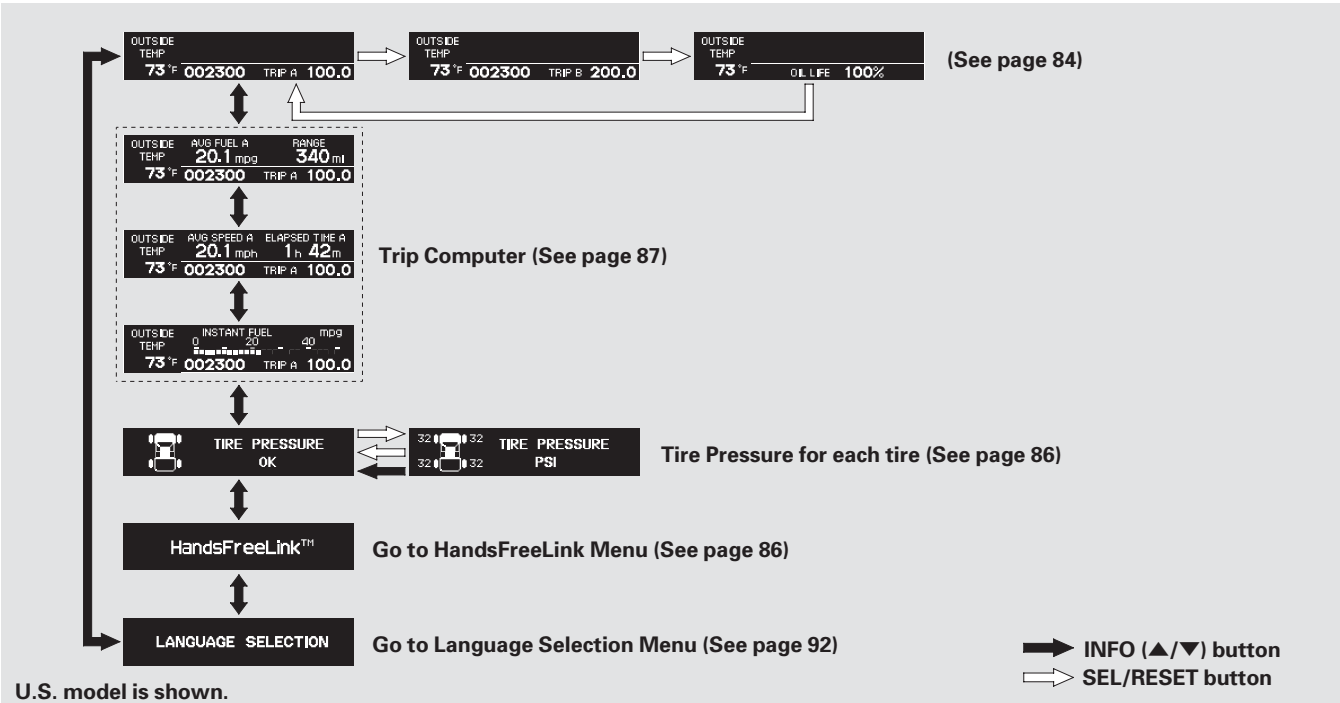

U.S. model is shown.

Multi-Information Display

Odometer

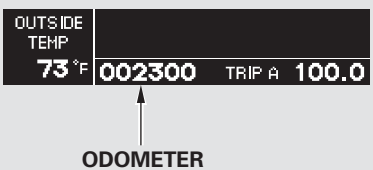

U.S. model is shown.

The odometer shows the total distance your vehicle has been driven. It measures miles in U.S. models and kilometers in Canadian models. It is illegal under U.S. federal law and Canadian provincial/territorial regulations to disconnect, reset, or alter the odometer with the intent to change the number of miles or kilometers indicated.

Trip Meter

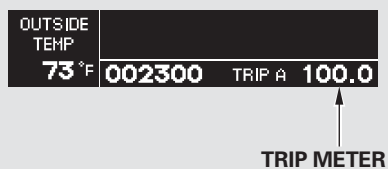

U.S. model is shown.

This meter shows the number of miles (U.S.) or kilometers (Canada) driven since you last reset it. There are two trip meters: Trip A and Trip B. Each trip meter works independently, so you can keep track of two different distances.

To reset a trip meter, display it, and then press and hold the SEL/RESET button until the number resets to “0.0.”

When you reset Trip A, AVERAGE FUEL A, AVERAGE SPEED A, and ELAPSED TIME A are reset at the same time. When you reset Trip B, AVERAGE FUEL B, AVERAGE SPEED B, and ELAPSED TIME B are reset.

Outside Temperature

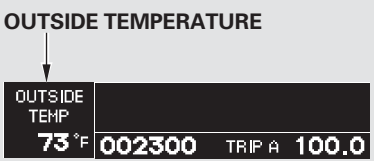

U.S. model is shown.

This shows the outside temperature in Fahrenheit (U.S. models), or in Celsius (Canadian models).

The temperature sensor is in the front bumper. The temperature reading can be affected by heat reflection from the road surface, engine heat, and the exhaust from surrounding traffic. This can cause an incorrect temperature reading when your vehicle speed is under 19 mph (30 km/h). When you start your trip, the sensor is not fully acclimatized, therefore it may take several minutes until the proper temperature is displayed.

In certain weather conditions, temperature readings near freezing (32°F, 0°C) could mean that ice is forming on the road surface.

If the outside temperature is incorrectly displayed, you can adjust it up to ±5°F in U.S. models (±3°C in Canadian models) warmer or cooler.

NOTE: The temperature must be stabilized before doing this procedure.

To adjust the outside temperature indicator, press and hold the SEL/RESET button for 10 seconds. The following sequence will appear for 1 second each: 0, 1, 2, 3, 4, 5, −5, −4, −3, −2, −1, 0 (U.S.) or 0, 1, 2, 3, −3, −2, −1, 0 (Canada).

When the temperature reaches the desired value, release the SEL/RESET button. You should see the new outside temperature displayed.

Multi-Information Display

Engine Oil Life

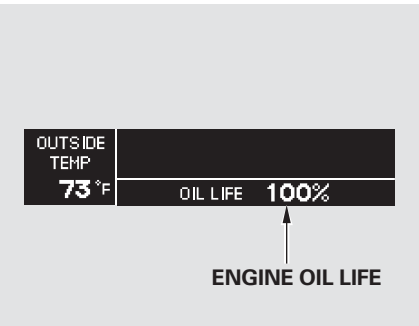

This shows the remaining life of the engine oil. It shows 100% after the engine oil is replaced and the display is reset. The engine oil life is calculated based on engine operating conditions and accumulated engine revolutions. For more information, see page 313 .

Tire Pressure Monitor

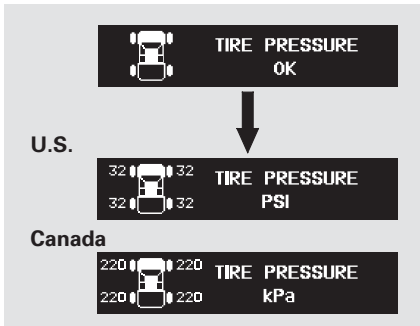

When the tire pressure monitor is shown on the multi-information display, press the SEL/RESET button. The display changes as shown.
You can see the pressure of each tire in this monitor. If one or more tires are low, inflate them to the correct pressure. For more information, see page 282 .

Bluetooth® HandsFreeLink®

You can receive or make phone calls from your cell phone through your vehicle's *Bluetooth*® HandsFreeLink® (HFL) system without touching your cell phone.

To use the system, your cell phone and the HFL system must be linked. Not all cell phones are compatible with this system. Refer to page 221 for instructions on how to link your cell phone to HFL and how to receive or make phone calls, or visit the handsfreelink.com website. In Canada, visit *www.honda.ca*, or call 1-(888) 9-HONDA-9.

Trip Computer

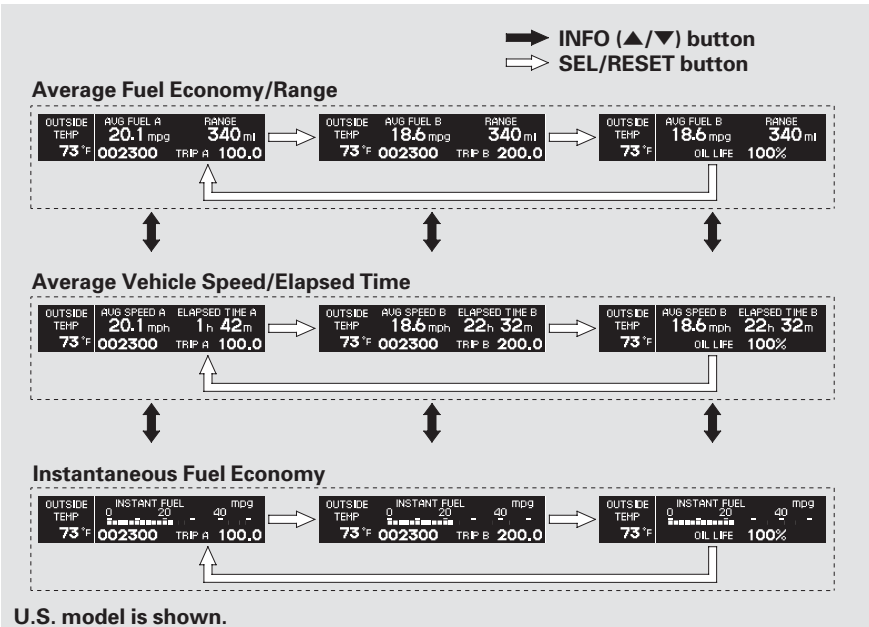

U.S. model is shown.

CONTINUED

Multi-Information Display

Along with the trip meter, the trip computer calculates these values:

- Average Fuel Economy
- Range
- Average Vehicle Speed
- Elapsed Time
- Instantaneous fuel economy

AVERAGE FUEL A/B
This shows your vehicle's average fuel economy in mpg (U.S. models) or liter/100 km (Canadian models) since you last reset Trip A or Trip B.

RANGE
This shows the estimated distance you can travel on the fuel remaining in the fuel tank. This distance is estimated from the fuel economy you received over the last several miles (U.S.) or kilometers (Canada), so it will vary with changes in speed, traffic, etc.

AVERAGE SPEED A/B
This shows the average speed you are traveling in miles per hour (mph) for U.S. models or kilometers per hour (km/h) for Canadian models.

ELAPSED TIME A/B
This shows the accumulated traveling time since you last reset it. When you turn the ignition switch to the ON (II) position, ELAPSED TIME is reset.

INSTANT FUEL MPG (U.S. models)/INSTANT FUEL L/100 km (Canadian models)
This shows your instant fuel economy.

System Messages

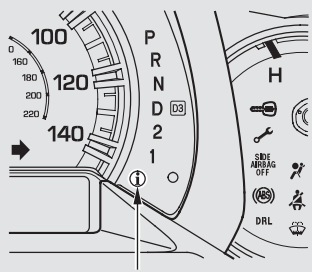

SYSTEM MESSAGE INDICATOR

If there is a problem with your vehicle, for example the engine oil level is low or a door is not fully closed, the multi-information display will show you the problem. It does this by interrupting the current display with one or more messages.

The system message(s) triggers the appropriate indicator(s) on the instrument panel, including the system message indicator, to come on. The system message indicator does not go off until the problem(s) is corrected.

You will also hear a beep when the system message comes on for the first time.

When there are several messages to be shown, the system switches the messages every 5 seconds.
The message is shown until you push the INFO (▲ or ▼) button.
To see the message again, press the INFO (▲ or ▼) button, 5 seconds after the display disappears.

Here is a list of messages shown on the multi-information display:

CONTINUED

Multi-Information Display

DOOR OPEN	See page 11
FASTEN SEATBELT	See page 20
FASTEN PASSENGER SEATBELT	See page 20
CHECK AIRBAG SYSTEM	See page 30
U.S. SIDE AIRBAG OFF PASSENGER SIDE AIRBAG OFF **Canada** PASSENGER SIDE AIRBAG OFF	See page 31

U.S. BRAKE RELEASE PARKING BRAKE **Canada** RELEASE PARKING BRAKE	See page 132
U.S. BRAKE BRAKE FLUID LOW **Canada** BRAKE FLUID LOW	See page 376

U.S. BRAKE CHECK BRAKE SYSTEM **Canada** CHECK BRAKE SYSTEM	See page 376
CHECK CHARGING SYSTEM	See page 374
CHECK EMISSION SYSTEM	See page 375

CHECK ENGINE OIL LEVEL	See page 374
CHECK ABS SYSTEM	See page 289
CHECK VSA SYSTEM	See page 291
CHECK TIRE PRESSURE	See page 281

CHECK TPMS SYSTEM	See page 282
A/T TEMP HIGH	See page 69
CHECK TRANSMISSION	See page 271
WASHER FLUID LOW	See page 330

FUEL LOW	See page 68
CHECK DRL SYSTEM	See page 97
SERVICE DUE SOON A135	See page 319
TIGHTEN FUEL CAP	See page 250

Multi-Information Display

Language Selection

There are three language selections you can make: English, Spanish, and French. To choose the language you want, follow these instructions:

Press and release the INFO (▲/▼) button repeatedly to select the "LANGUAGE SELECTION" display.

Press the SEL/RESET button to see the selections.

Select the desired language by pressing the SEL/RESET button, then enter your selection by pressing and holding the SEL/RESET button.

When your selection is successfully completed, the display returns to the "LANGUAGE SELECTION" display.

Controls Near the Steering Wheel

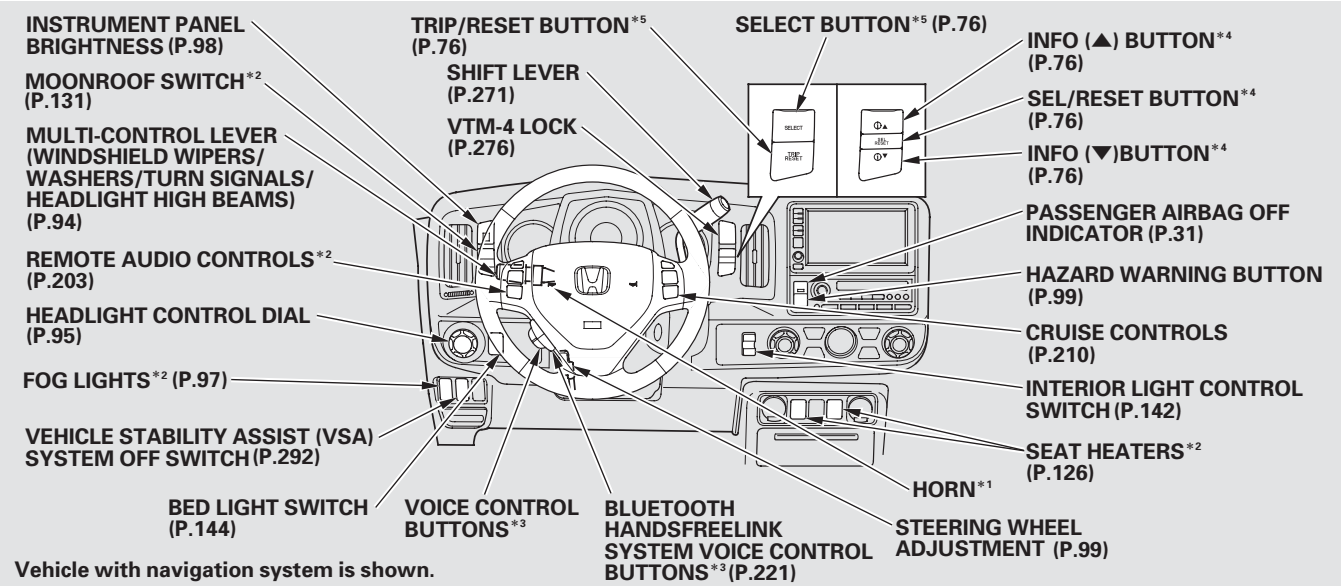

Vehicle with navigation system is shown.

* 1 : To use the horn, press the center pad of the steering wheel.
* 2 : If equipped
* 3 : Only on vehicles equipped with navigation system. Refer to the navigation system manual.
* 4 : On models with navigation system.
* 5 : On models without navigation system.

Multi-Control Lever

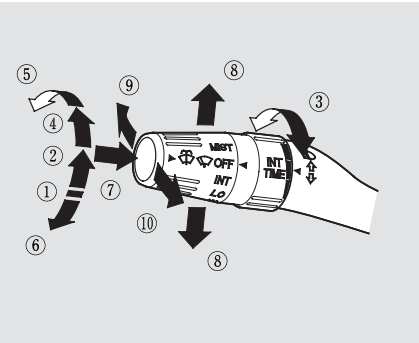

1.OFF
2.INT: Intermittent
3.INT TIME ring
4.LO: Low speed
5.HI: High speed
6.MIST
7.Windshield washers
8.Turn signal
9.High beams
10.Flash high beams

The multi-control lever has many functions, including windshield wipers and washers, turn signals, headlight high beams, and headlight high beam flashing.

To select a position, turn the rotary switch, push the button on the end of the lever, or push the lever up, down, forward, or backward.

OFF: The wipers are not activated.

INT: The length of the wiper interval is varied automatically according to the vehicle's speed.

Vary the delay by turning the INT TIME ring. If you turn it to the shortest delay, the wipers change to low speed when the vehicle speed exceeds 12 mph (20 km/h).

LO — The wipers run at low speed.

HI — The wipers run at high speed.

MIST: The wipers run at high speed until you release the lever.

Windshield Washer: Push the button on the end of the multi-control lever. The washers spray until you release the button. The wipers run at low speed, then complete one more sweep after you release the button.

Automatic Heated Wiper Zone
Your vehicle has heating wires at the bottom of the windshield to help heat the wiper blades and the windshield. If the outside temperature is near freezing, the heater turns on automatically when you turn the ignition switch to the ON (II) position. The heater turns off automatically when the outside temperature is above freezing.

This function helps to increase wiper performance when the wiper arms sit in the parked position in snowy or icy conditions.

Turn Signal — Push down on the multi-control lever to signal a left turn and up to signal a right turn. To signal a lane change, push lightly on the lever and hold it. The lever will return to center when you release it or complete a turn.

High Beams — To turn on the high beams, push the multi-control lever forward until you hear a click. The blue high beam indicator will come on (see page 67). Pull the lever back to return to the low beams.

To flash the high beams, pull the lever back lightly, then release it. The high beams will stay on as long as you hold the lever back.

Headlight Control Dial

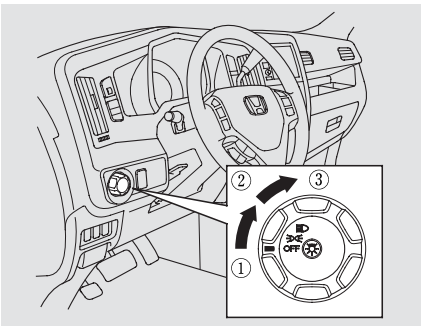

1. OFF
2. Parking and indicator lights
3. Headlights

CONTINUED

Headlights

Headlights — Turning the dial to the " " position turns on the parking lights, taillights, instrument panel lights, and license plate lights.

Turning the dial to the " " position turns on the headlights. If you leave the lights on and remove the key from the ignition switch, you will hear a reminder chime when you open the driver's door.

When the dial is in the " " or " " position, the lights on indicator comes on as a reminder. This indicator stays on if you leave the lights on and turn the ignition switch to the ACCESSORY (I) or LOCK (0) position.

Automatic Lighting Off Feature
The automatic lighting off feature turns off the headlights, all other exterior lights, and the instrument panel lights within 15 seconds of removing the key from the ignition switch and closing the driver's door.

This feature activates if you leave the headlight control dial in the " " or " " position, remove the key, then open and close the driver's door.

If you remove the key from the ignition switch with the headlight control dial on, but do not open the door, the lights will turn off after 10 minutes.

The lights will turn on again when you unlock or open the driver's door. If you unlock the door, but do not open it within 15 seconds, the lights go off. With the driver's door open, you will hear a lights-on reminder chime.

Daytime Running Lights
With the headlight control dial off, the daytime running lights come on when you turn the ignition switch to the ON (II) position and release the parking brake. They remain on until you turn the ignition switch off, even if you set the parking brake.

The headlights revert to normal operation when you turn them on with the headlight control dial.

On models with navigation system
If you see a “CHECK DRL SYSTEM” message on the multi-information display, there is a problem with the daytime running light circuit. Take your vehicle to a dealer to have it checked.

Fog Lights
If equipped

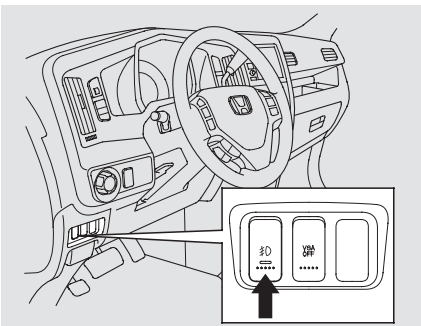

Turn the fog lights on and off by pressing the button. The indicator in the button lights to show the fog lights are on.

You can use the fog lights only when the headlights are on low beam. They will go off when you turn the headlights off or onto high beam.

Instrument Panel Brightness

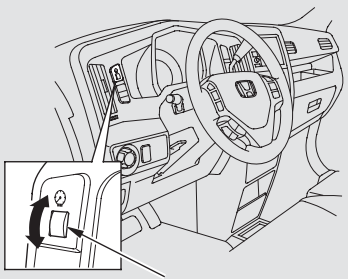

The dial on the instrument panel controls the brightness of the instrument panel lights and the console compartment light. Turn the dial to adjust the brightness.

The instrument panel will illuminate when you unlock and open the driver's door. The brightness will increase when you insert the key in the ignition switch.

If you do not insert the key in the ignition switch after opening the driver's door, the illumination turns off about 30 seconds after you close the door.

If you insert the key but do not turn the ignition switch to the ON (II) position, the illumination turns off in about 10 seconds.

The instrument panel brightness is dimmed when you turn the headlight control dial to the " " or " " position to reduce glare at night. To cancel it, turn the instrument panel brightness control dial upward fully until you hear a click.

Hazard Warning Button

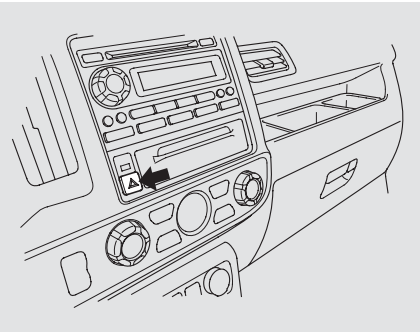

Push the button to turn on the hazard warning lights (four-way flashers). This causes all four outside turn signals and both turn indicators in the instrument panel to flash. Use the hazard warning lights if you need to park in a dangerous area near heavy traffic, or if your vehicle is disabled.

Steering Wheel Adjustment

Make any steering wheel adjustment before you start driving.

⚠ WARNING

Adjusting the steering wheel position while driving may cause you to lose control of the vehicle and be seriously injured in a crash.

Adjust the steering wheel only when the vehicle is stopped.

1. Push the lever on the left side of the steering column all the way down.
2. Move the steering wheel so it points toward your chest, not toward your face. Make sure you can see the instrument panel gauges and indicators.

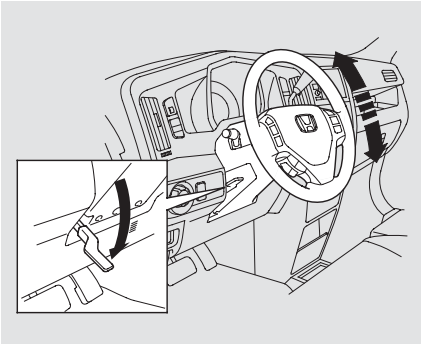

3. Push the lever up to lock the steering wheel in position.
4. Make sure you have securely locked the steering wheel in place by trying to move it up and down.

Keys

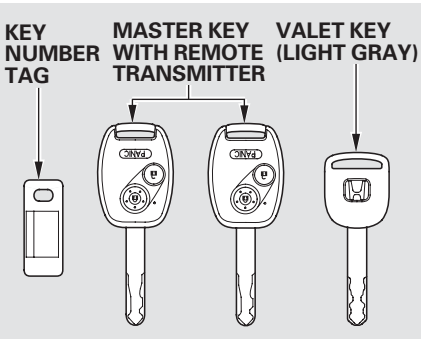

The master key fits all the locks on your vehicle. The valet key works only in the ignition and the driver's door lock. You can keep the glove box locked when you leave your vehicle and the valet key at a parking facility.

You can also keep the In-Bed Trunk locked by using the main switch in the glove box (see page 118).

You should have received a key number tag with your keys. You will need this key number if you ever have to get a lost key replaced. Use only Honda-approved key blanks.

These keys contain electronic circuits that are activated by the immobilizer system. They will not work to start the engine if the circuits are damaged.

- Protect the keys from direct sunlight, high temperature, and high humidity.
- Do not drop the keys or set heavy objects on them.
- Keep the keys away from liquids. If they get wet, dry them immediately with a soft cloth.

The valet key does not contain a battery. Do not try to take it apart.

Immobilizer System

The immobilizer system protects your vehicle from theft. If an improperly coded key (or other device) is used, the engine's fuel system is disabled.

When you turn the ignition switch to the ON (II) position, the immobilizer system indicator should come on for a few seconds, then go off. If the indicator starts to blink, it means the system does not recognize the coding of the key. Turn the ignition switch to the LOCK (0) position, remove the key, reinsert it, and turn the ignition switch to the ON (II) position again.

The system may not recognize your key's coding if another immobilizer key or other metal object (i.e. key chain) is near the ignition switch when you insert the key.

If the system repeatedly does not recognize the coding of your key, contact your dealer.

Do not attempt to alter this system or add other devices to it. Electrical problems could result that may make your vehicle inoperable.

If you have lost your key and cannot start the engine, contact your dealer.

NOTICE

Always take the ignition key with you whenever you leave the vehicle alone.

As required by the FCC:
This device complies with Part 15 of the FCC rules. Operation is subject to the following two conditions: (1) This device may not cause harmful interference, and (2) this device must accept any interference received, including interference that may cause undesired operation.

Changes or modifications not expressly approved by the party responsible for compliance could void the user's authority to operate the equipment.

This device complies with Industry Canada Standard RSS-210.
Operation is subject to the following two conditions: (1) this device may not cause interference, and (2) this device must accept any interference that may cause undesired operation of the device.

Ignition Switch

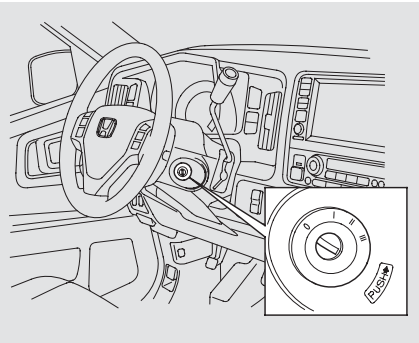

The ignition switch has four positions: LOCK (0), ACCESSORY (I), ON (II), and START (III).

LOCK (0) — You can insert or remove the key only in this position. To turn the key, the shift lever must be in Park, and you must push the key in slightly.

If the front wheels are turned, the anti-theft lock may make it difficult to turn the key. Firmly turn the steering wheel to the left or right as you turn the key.

ACCESSORY (I) — You can operate the audio system and the accessory power sockets in this position.

ON (II) — This is the normal key position when driving. Several of the indicators on the instrument panel come on as a test when you turn the ignition switch from the ACCESSORY (I) to the ON (II) position.

START (III) — Use this position only to start the engine. The switch returns to the ON (II) position when you let go of the key.

You will hear a reminder beeper if you leave the key in the ignition switch in the LOCK (0) or the ACCESSORY (I) position and open the driver's door. Remove the key to turn off the beeper.

The shift lever must be in Park before you can remove the key from the ignition switch.

Power Door Locks

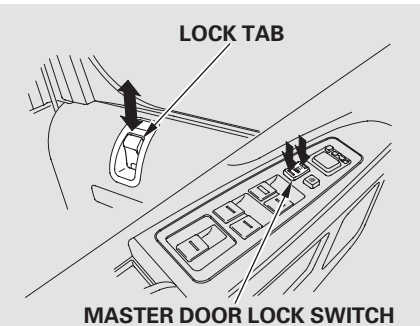

To lock all doors and the In-Bed Trunk, push the front of the master door lock switch on either front door, press the lock tab down on the driver's door, or use the key on the outside lock on the driver's door.

Pushing the rear of either master door lock switch will unlock all of the doors and the In-Bed Trunk.

The lock tab on each door locks and unlocks that door. Pulling up on the driver's door lock tab only unlocks the driver's door. To unlock the driver's door and the In-Bed Trunk from the outside, turn the key and release it. If you turn it again, all the doors unlock.

You can open or close the side windows by using the key in the driver's door (see page 130).

To lock any passenger's door when getting out of the vehicle, push the lock tab down, and close the door. To lock the driver's door, remove the key from the ignition switch, and push the lock tab down, or push the front of the master switch, then close the door.

Lockout Prevention

With the driver's door open and the key in the ignition, both master door lock switches will not lock, but they will unlock. The lock feature is not disabled if the driver's door is closed. Pushing the front of the switch on the open passenger's door will lock all doors and the In-Bed Trunk.

This vehicle has auto door locking/ unlocking features. See page 104 for how to set them.

Door Locks

Childproof Door Locks

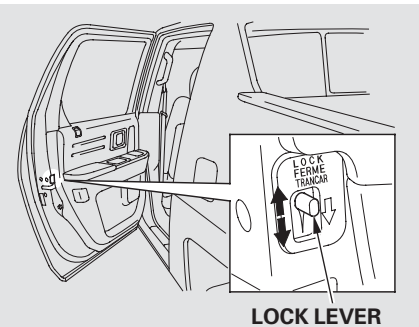

The childproof door locks are designed to prevent children seated in the rear from accidentally opening the rear doors. Each rear door has a lock lever near the edge. With the lever in the LOCK position, the door cannot be opened from inside regardless of the position of the lock tab. To open the door, pull the lock tab up, and use the outside door handle.

Auto Door Locking/Unlocking

Your vehicle has customizable settings for the doors to automatically lock and unlock. There are default settings for each of these features. You can turn off or change the settings for these features as described on the following pages. When you customize the setting, make sure your vehicle is parked safely, the engine is off, and the parking brake is applied. Make all settings before you start driving.

With the auto door locking and unlocking, the In-Bed Trunk also locks and unlocks.

Auto Door Locking

The auto door locking feature has three possible settings:

- The auto door locking is deactivated all the time.
- The doors lock whenever you move the shift lever out of the Park (P) position.
- The doors lock when the vehicle speed reaches 9 mph (15 km/h). This is the default setting.

To turn off the Auto Door Lock modes:

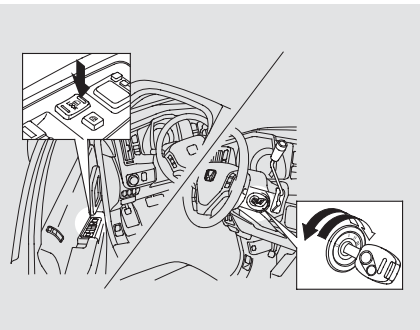

1. Make sure the shift lever is in the Park (P) position.

2. Turn the ignition switch to the ON (II) position, and open the driver's door.

3. Push and hold the front of the master door lock switch on the driver's door until you hear a click (after about 5 seconds).

4. Release the switch, and within 5 seconds, turn the ignition switch to the LOCK (0) position.

To program the Park Lock mode:
Locks all doors when the shift lever is moved out of the Park (P) position.

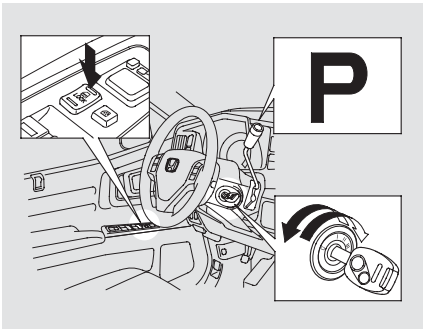

1. Make sure the shift lever is in the Park (P) position.

2. Turn the ignition switch to the ON (II) position, and make sure to close the driver's door.

CONTINUED

Door Locks

3. Push and hold the front of the master door lock switch on the driver's door. You will hear a click. Keep holding the switch until you hear another click (after about 5 seconds).

4. Release the switch, and within 5 seconds, turn the ignition switch to the LOCK (0) position.

To program the Drive Lock mode:
Locks all doors when the vehicle's speed reaches about 9 mph (15 km/h).

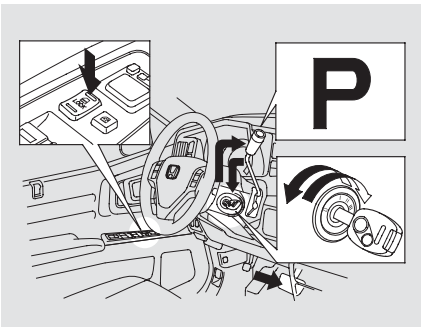

1. Make sure the shift lever is in the Park (P) position.

2. Turn the ignition switch to the ON (II) position, and make sure to close the driver's door.

3. Push and hold the brake pedal, and move the shift lever out of the Park (P) position.

4. Push and hold the front of the master door lock switch on the driver's door. You will hear a click. Keep holding the switch until you hear another click (after about 5 seconds).

5. Release the switch and, within 5 seconds, turn the ignition switch to the ACCESSORY (I) position. Move the shift lever to the Park (P) position.

6. Turn the ignition switch to the LOCK (0) position.

Auto Door Unlocking
The auto door unlocking feature has five possible settings:

- The auto door unlocking is deactivated all the time.
- The driver's door unlocks when you move the shift lever to the Park (P) position with the brake pedal depressed.
  This is the default setting.
- All doors unlock when you move the shift lever to the Park (P) position with the brake pedal depressed.
- The driver's door unlocks whenever you turn the ignition switch to the ACCESSORY (I) position.
- All doors unlock whenever you turn the ignition switch to the ACCESSORY (I) position.

To turn off the Auto Door Unlock modes:

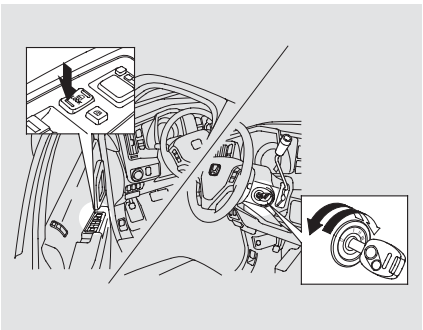

1. Make sure the shift lever is in the Park (P) position.
2. Turn the ignition switch to the ON (II) position, and open the driver's door.
3. Push and hold the rear of the master door lock switch on the driver's door. You will hear a click, and after about 5 seconds, you will hear another click.
4. Release the switch, and within 5 seconds, turn the ignition switch to the LOCK (0) position.

CONTINUED

Door Locks

To program the Park Unlock mode:
Unlocks the driver's door or all doors when the shift lever is moved into the Park (P) position with the brake pedal depressed.

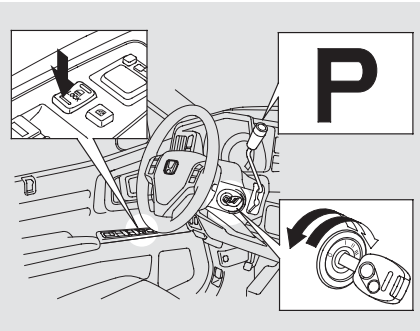

1. Make sure the shift lever is in the Park (P) position.

2. Turn the ignition switch to the ON (II) position, and make sure to close the driver's door.

3. Push and hold the rear of the master door lock switch on the driver's door. You will hear a click. Continue to hold down the switch:

   – Until you hear another click (after about 5 seconds) to activate *driver's door unlock feature.*

   – Or, until you hear two more clicks (after about 10 seconds) to activate the all doors unlock feature.

4. Release the switch, and within 5 seconds, turn the ignition switch to the LOCK (0) position.

To program the Ignition Switch Unlock mode:
Unlocks the driver's door or all doors when the ignition switch is moved out of the ON (II) position.

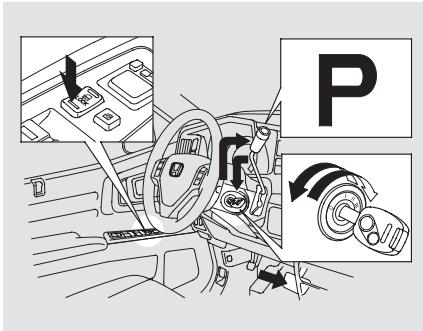

1. Make sure the shift lever is in the Park (P) position.

2. Turn the ignition switch to the ON (II) position, and make sure to close the driver's door.

3. Push and hold the brake pedal, then move the shift lever out of the Park (P) position.

4. Push and hold the rear of the master door lock switch on the driver's door. You will hear a click. Continue to hold the switch:

   — Until you hear another click (after about 5 seconds) to activate the driver's door unlock feature.

   — Or, until you hear two more clicks (after about 10 seconds) to activate the all doors unlock feature.

5. Release the switch and, within 5 seconds, turn the ignition switch to the ACCESSORY (I) position. Move the shift lever to the Park (P) position.

6. Turn the ignition switch to the LOCK (0) position.

If your vehicle's battery is removed or goes dead, the auto door lock/unlock setting is reset to the deactivated mode.

Remote Transmitter

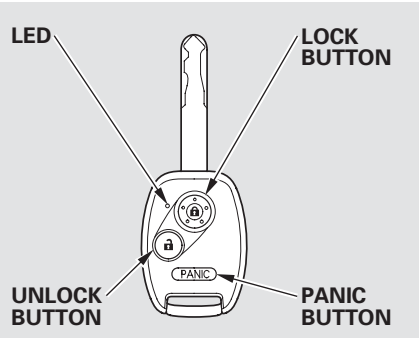

LOCK — Press this button once to lock all doors and the In-Bed Trunk. Some exterior and interior lights will flash once.
When you push LOCK twice within 5 seconds, you will hear a beep to verify that the doors and In-Bed Trunk are locked and the security system (if equipped) has set. This button does not work if any door is not fully closed or the key is in the ignition switch.

UNLOCK — Press this button once to unlock the driver's door and the In-Bed Trunk. Push it twice to unlock the remaining doors.
Some exterior and interior lights will flash twice each time you push the button.

When you press the UNLOCK button, the front and rear individual map lights, depending on the interior light control switch position, will come on (see page 142). If you do not open any door, the lights stay on for about 30 seconds, then go out. If you relock the doors and the In-Bed Trunk with the remote transmitter before 30 seconds have elapsed, the lights will go off immediately.

If you do not open any door within 30 seconds, the doors automatically relock, and the security system sets (if equipped). The UNLOCK button does not work when the key is in the ignition switch.

You can also open all side windows from outside the vehicle with the remote transmitter (see page 130).

PANIC — Press and hold this button for about 1 second to attract attention; the horn will sound, and the exterior lights will flash for about 30 seconds. To cancel panic mode, press any other button on the remote transmitter, or turn the ignition switch to the ON (II) position. Panic mode does not work when the key is in the ignition switch.

Remote Transmitter Care

- Avoid dropping or throwing the transmitter.
- Protect the transmitter from extreme temperature.
- Do not immerse the transmitter in any liquid.
- If you lose a transmitter, the replacement needs to be reprogrammed by your dealer.

Replacing the Transmitter Battery

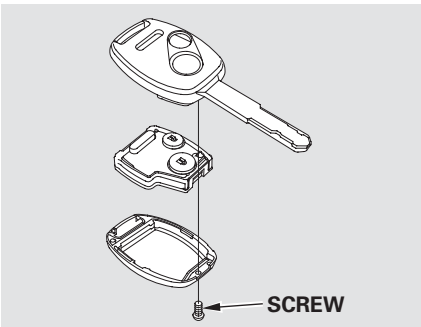

If it takes several pushes on the button to lock or unlock the doors, replace the battery as soon as possible.
Battery type: CR1616

To replace the battery:

1. Remove the screw at the base of the transmitter with a small Phillips-head screwdriver.

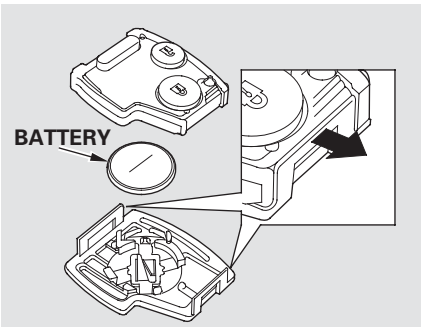

2. Separate the transmitter by prying its middle seam with your fingernail.
3. Inside the transmitter, separate the inner cover from the keypad by releasing the two tabs on the cover.

CONTINUED

Remote Transmitter

4. Remove the old battery from the back of the inner cover, and insert a new battery into the back of the cover with the + side facing down.

   An improperly disposed of battery can hurt the environment. Always confirm local regulations for battery disposal.

5. Install the parts in reverse order.

As required by the FCC:
This device complies with Part 15 of the FCC rules. Operation is subject to the following two conditions: (1) This device may not cause harmful interference, and (2) this device must accept any interference received, including interference that may cause undesired operation.

Changes or modifications not expressly approved by the party responsible for compliance could void the user's authority to operate the equipment.

This device complies with Industry Canada Standard RSS-210.
Operation is subject to the following two conditions: (1) this device may not cause interference, and (2) this device must accept any interference that may cause undesired operation of the device.

Dual-Action Tailgate

You can open the tailgate two different ways:

- Drop it open by using the upper handle.
- Swing it open by using the right lower handle.

NOTE:
As a safety feature, the upper handle is disabled if you do not fully close the tailgate after it is swung open. And the lower handle is disabled if you do not fully close the tailgate after it is dropped open.

Before you open the tailgate a different way (dropped open, and then swung open), make sure it is fully closed.

Make sure all passengers and objects are clear of the tailgate before opening and closing it, and make sure the tailgate is closed securely before driving.

To Drop Open the Tailgate

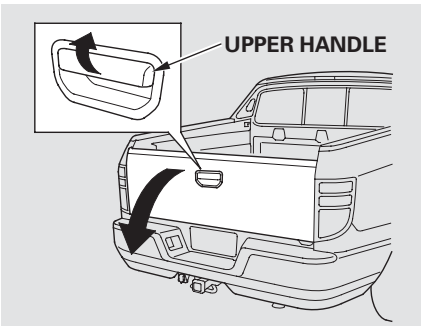

To drop open the tailgate, pull up the upper handle, then pull down the tailgate. To close the tailgate, push firmly up until it latches.

CONTINUED

Dual-Action Tailgate

The dropped open tailgate can be used as an extended pickup bed. Make sure to secure the items in the pickup bed, and do not exceed the maximum allowable weight on the tailgate (see page 263).

To turn the bed lights on or off, use the bed light switch on the dashboard (see page 144).

To Swing Open the Tailgate

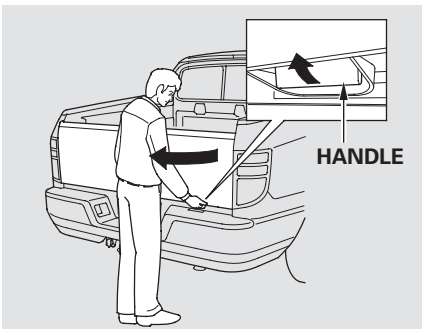

To swing open the tailgate, first make sure it is fully closed, then pull up the right lower handle, and swing the tailgate to the left.
To close, swing the tailgate back, and push it firmly until it is latched.

Before opening or closing the tailgate, check that passengers, especially children, are not in the tailgate's path.

NOTICE

Do not drive with the tailgate swung open. This could damage the tailgate.

⚠ WARNING

Swinging the tailgate open or closed while anyone is in its path can cause serious injury.

Make sure all passengers are clear of the tailgate's path before opening or closing it.

Do not allow anyone to hang on the swung open tailgate. This could damage the tailgate.

Do not leave the tailgate swung open. The tailgate may swing and shut accidentally. This could cause serious injuries.

The bed lights come on when you swing open the tailgate. You can also turn the bed lights on or off by pushing the bed light switch on the dashboard (see page 144).

Tailgate Open Indicator

On models without navigation system
This indicator is in the door and tailgate open monitor on the instrument panel. It comes on when the tailgate is swung open or it is not completely closed. This indicator works even if the key is not in the ignition switch.

If the tailgate is swung open or not closed tightly when the ignition switch is in the ON (II) position, you will hear six beeps and see the indicator blinking. The indicator stays on until you close the tailgate. The beeper also sounds and the indicator blinks when you move the shift lever out of the Park or neutral position.

On models with navigation system
The tailgate open indicator appears on the multi-information display (see page 11).

If you do not fasten the seat belt, you first hear the seat belt reminder alarm, then the tailgate reminder beeper sounds.

The indicator does not monitor the tailgate when it is dropped open.

Loading Cargo
See page 259 for information on cargo loading and weight limits.

You can also store and lock items in the In-Bed Trunk (see page 116).

In-Bed Trunk®

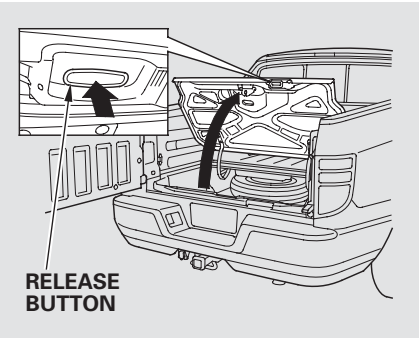

You can open the In-Bed Trunk two different ways:

- Push the release button on the lower right side of the In-Bed Trunk lid when the driver's door is unlocked.
- Use the master key to open the In-Bed Trunk when the driver's door is locked.

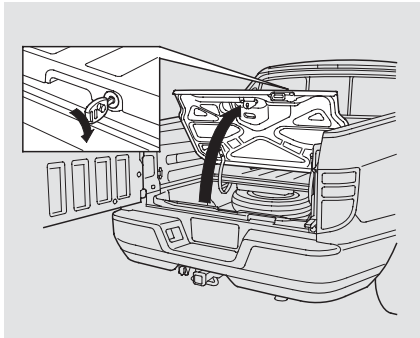

To close the In-Bed Trunk, lower the lid, then press down on the back edge.

When the In-Bed Trunk is closed securely, it can be locked or unlocked along with the power door locks (see page 103).

If your vehicle's battery is disconnected or goes dead, the release button on the In-Bed Trunk lid is disabled. To open the In-Bed Trunk, use the master key.

The bed lights come on when you open the In-Bed Trunk. You can also turn the bed lights on or off by pushing the bed light switch on the dashboard (see page 144).

You can store items in the In-Bed Trunk up to 300 lbs (136 kg). Do not exceed this weight limit, or you may damage the In-Bed Trunk. See page 259 for information on loading cargo and weight limits.

To store items separately in the In-Bed Trunk, optional divider guides are available from your dealer.

To avoid damaging the key and key cylinder of the In-Bed Trunk lid, do not close the tailgate when the key is in the lid.

To avoid damaging the In-Bed Trunk lid, and to prevent items from being thrown about the vehicle and possibly hurting someone in a crash or sudden stop, be sure the In-Bed Trunk lid is securely closed before driving away.

To avoid damaging the bottom of the In-Bed Trunk, do not drive over large obstacles, and do not use it as a jacking point to raise the vehicle.

To avoid damaging the seal on the In-Bed Trunk lid, remove any debris from the lid's mating surface before you close it.

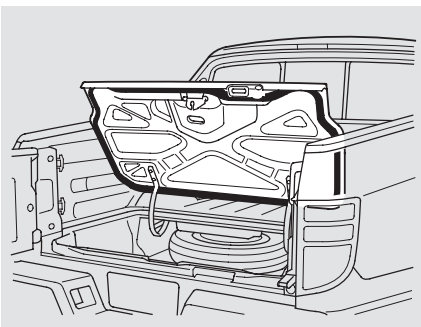

In-Bed Trunk Open Indicator

This indicator on the instrument panel reminds you that the In-Bed Trunk is open (see page 75).

Emergency Opener

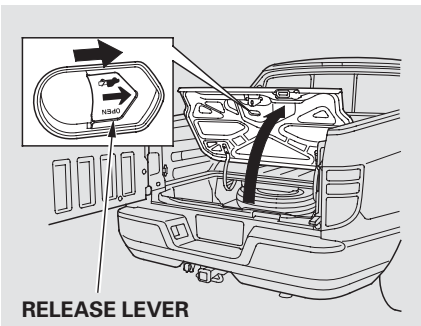

As a safety feature, your vehicle has a release lever on the latch of the In-Bed Trunk lid so it can be opened from the inside. To open the In-Bed Trunk, push the release lever in the direction of the arrow.

Parents should decide if their children should be shown how to use this feature. For more information about child safety, see page 38 .

In-Bed Trunk®

In-Bed Trunk Main Switch

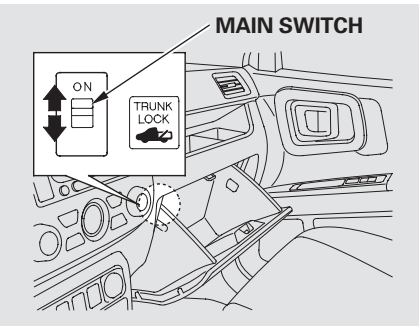

To protect items in the In-Bed Trunk, you can disable its release button by turning off the main switch in the glove box and locking the glove box with the master key.

Even if the main switch is in the OFF position, you can open the In-Bed Trunk with the master key.

Washing the In-Bed Trunk

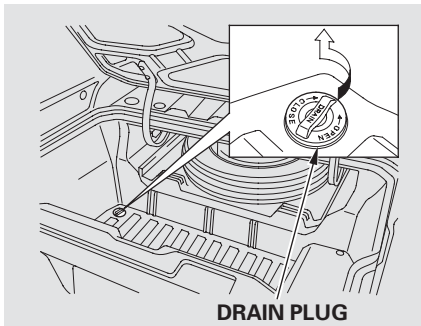

You can wash the inside of the In-Bed Trunk with a water and mild detergent solution, and a soft brush or cloth.

To drain water from the In-Bed Trunk, remove the drain plug by turning it counterclockwise.

When you are finished washing the In-Bed Trunk, dry it with a soft cloth, and reinstall the drain plug.

Cargo Hooks

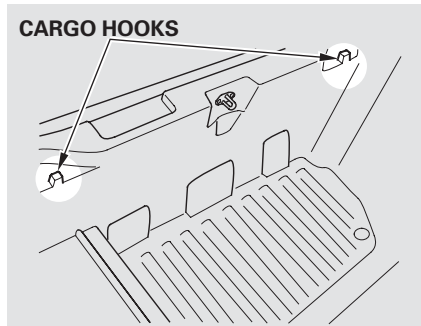

There are two cargo hooks for plastic grocery bags at the back of the In-Bed Trunk. They are designed to hold light items. Heavy objects may damage the hooks.

The front passenger's seat in all models adjusts manually.

Manual Seat Adjustments

On RT and Canadian DX and VP models
See pages 13 — 15 for important safety information and warnings about how to properly position the seats and seat-backs.

Make all seat adjustments before you start driving.

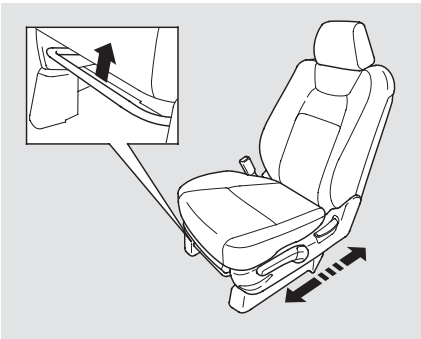

To adjust the seat forward or backward, pull up on the bar under the seat cushion's front edge. Move the seat to the desired position, and release the bar. Try to move the seat to make sure it is locked in position.

CONTINUED

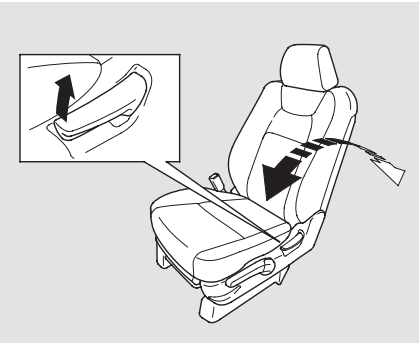

To change the seat-back angle of the front seat, pull up the lever on the outside of the seat bottom.

Once a seat is adjusted correctly, rock it back and forth to make sure it is locked in position.

Driver's Seat Manual Height Adjustment

Make all seat adjustments before you start driving.

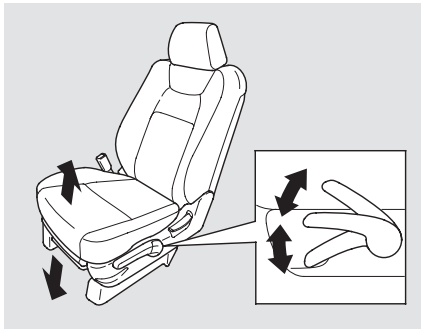

On RT and Canadian DX and VP models

The height of your driver's seat is adjustable. To raise the seat, repeatedly pull up the lever on the outside of the seat cushion. To lower the seat, push the lever down repeatedly.

Make sure to pull the lever upward or downward to its full range.

Power Seat Adjustments

On RTS, RTL and Canadian EX-L models

See pages 13 — 15 for important safety information and warnings about how to properly position the seats and seat-backs.

The controls for the power adjustable driver's seat are on the outside edge of the seat bottom. You can adjust the seat with the ignition switch in any position. Make all seat adjustments before you start driving.

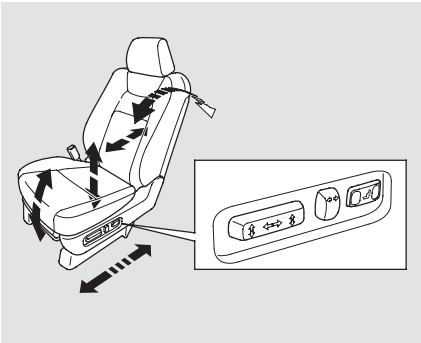

Moves the seat forward and backward.

Moves the front of the seat up or down.

Raises or lowers the seat.

Moves the whole seat up and forward, or down and backward. The front of the seat also tilts up or down at the same time.

Adjusts the seat-back angle forward or backward.

Increases or decreases the lumbar support. (RTL and Canadian EX-L models)

Seats

Armrests

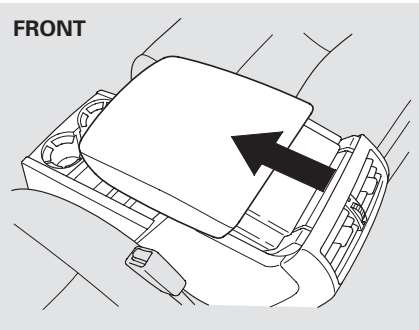

To use the console lid as an armrest, slide it to the desired position.

Make sure your passenger's hands and fingers are away from the armrest before moving it.

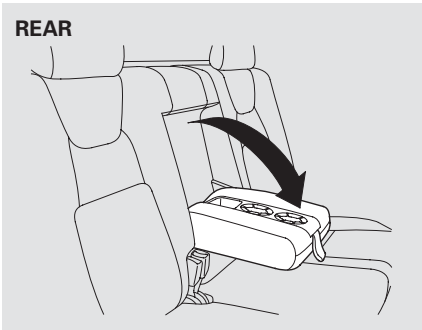

The rear seat armrest is in the center of the rear seats. Pivot it down to use it.

Head Restraints

See page 15 for important safety information and a warning about improperly positioning head restraints.

Your vehicle is equipped with head restraints in all seating positions to help protect you and your passengers from the likelihood of whiplash and other injuries.

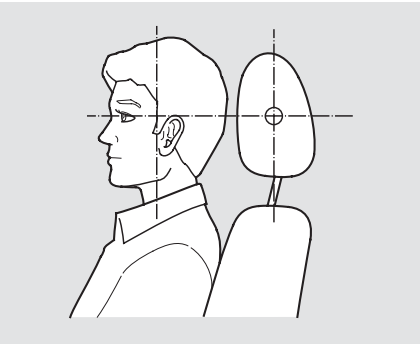

They are most effective when you adjust them so the center of the back of the occupant's head rests against the center of the restraint.

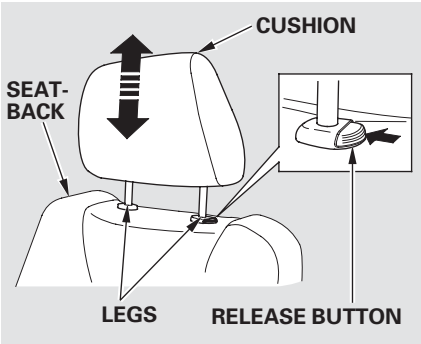

Adjusting the Head Restraint

The head restraints adjust for height. You need both hands to adjust the restraint. Do not attempt to adjust it while driving. To raise it, pull upward. To lower the restraint, push the release button sideways, and push the restraint down.

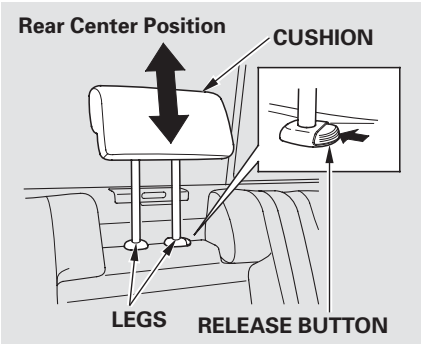

When a passenger is seated in the rear center seating position, make sure the center head restraint is properly positioned.

CONTINUED

Removing the Head Restraint

To remove a head restraint for cleaning or repair, pull it up as far as it will go. Push the release button, then pull the restraint out of the seat-back.

⚠ WARNING

Failure to reinstall the head restraints can result in severe injury during a crash.

Always replace the head restraints before driving.

When reinstalling a head restraint, put the legs back in place. Then adjust it to the appropriate height while pressing the release button.

Make sure the head restraint locks in position when you reinstall it.

Active Head Restraints

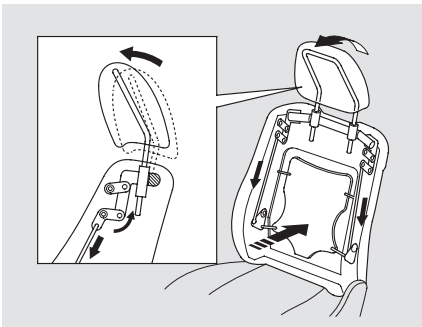

The driver's and front passenger's seats have active head restraints. If the vehicle is struck severely from the rear, the occupant properly secured with the seat belt will be pushed against the seat-back and the head restraint will automatically move forward.

This reduces the distance between the restraint and the occupant's head. It also helps protect the occupants against the likelihood of whiplash and injuries to the neck and upper spine.

After a collision, the activated restraint should return to its normal position.

If the restraints do not return to their normal position, or in the event of a severe collision, have the vehicle inspected by a Honda dealer.

For a head restraint system to work properly:

- Do not hang any items on the head restraints, or from the restraint legs.
- Do not place any object between an occupant and the seat-back.
- Install each restraint in its proper location.
- Only use genuine Honda replacement head restraints.

Folding the Rear Seats

The left and right rear seat cushions can be lifted up separately to make room for cargo.

Remove any items from the seat before you fold up the seat cushion.

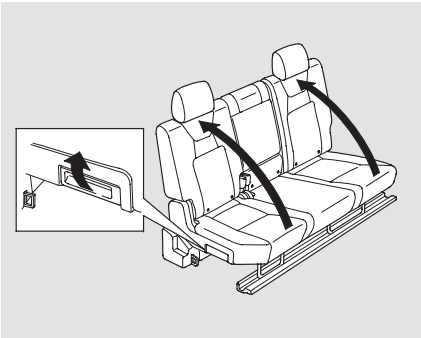

To fold a rear seat cushion, pull up the lever on the outside of the cushion. The seat cushion pops up, and the seat legs store underneath it. Push the cushion firmly against the seat-back to lock it in place.

CONTINUED

Seats, Seat Heaters

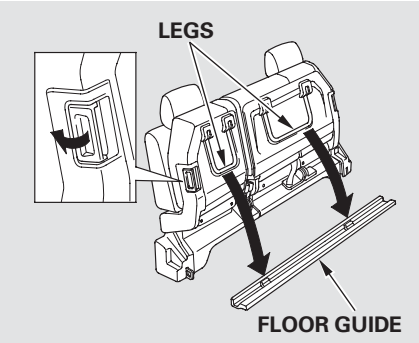

To return the seat cushion to its original position, pull the lever outward, then push down the seat cushion slowly.

Make sure the seat cushion is locked securely and the seat legs are positioned properly in the floor guide.

Make sure all items in the cargo area are secured. Loose items can fly forward and cause injury if you have to brake hard (See **Carrying Cargo** on page 259).

You can also store small items under the rear seats. Make sure to secure the items so they will not shift while you are driving.

Seat Heaters

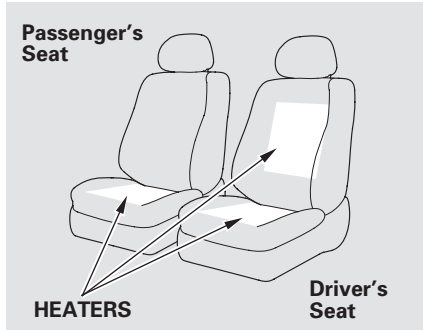

If equipped
Both front seats are equipped with seat heaters. Because of the sensors for the side airbag cutoff system, there is no heater in the passenger's seat-back. The ignition switch must be in the ON (II) position to use the heaters.

Seat Heaters

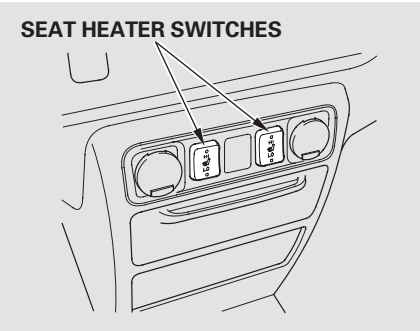

Push the top of the switch, HI, to rapidly heat up the seat. After the seat reaches a comfortable temperature, select LO by pushing the bottom of the switch. This will keep the seat warm.

In the HI setting, the heater turns off when the seat gets warm, and turns back on after the seat's temperature drops.

In the LO setting, the heater runs continuously. It does not cycle with temperature changes.

Follow these precautions when using the seat heaters:

- Use the HI setting only to heat the seats quickly, because it draws large amounts of current from the battery.
- If the engine is left idling for an extended period, do not use the seat heaters, even on the LO setting. It can weaken the battery, causing hard starting.

Power Windows

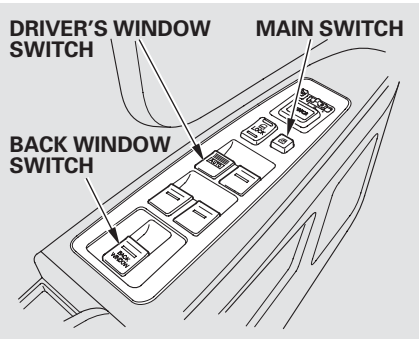

Turn the ignition switch to the ON (II) position to raise or lower any side window, or open and close the back window. To open the window, push the switch down and hold it. Release the switch when you want the window to stop. Pull back on the switch and hold it to close the window.

The windows operate for up to 10 minutes after you turn off the ignition switch. Opening either front door cancels this function.

⚠ WARNING

Closing a power window on someone's hands or fingers can cause serious injury.

Make sure your passengers are away from the windows before closing them.

AUTO — To open or close the driver's window, push or pull the window switch firmly down or up to the second detent, and release it. The window will automatically go up or down all the way. To stop the window, pull or push the window switch briefly.

When you push the MAIN switch in, the passenger windows and the back window cannot be raised or lowered.

To cancel this feature, push on the switch again. Keep the MAIN switch off when you have children in the vehicle so they do not injure themselves by operating the windows unintentionally.

AUTO REVERSE — If the driver's window senses any obstacle while it is closing automatically, it will reverse direction, and then stop. To close the window, remove the obstacle, then use the window switch again.

Auto reverse stops sensing when the window is almost closed. You should always check that all passengers and objects are away from the window before closing it.

If your vehicle's battery is disconnected or goes dead, or the driver's window fuse is removed, the AUTO function may be disabled. If the AUTO function is disabled, the power window system will need to be reset after reconnecting the battery or installing the fuse.

1. Start the engine. Push down and hold the driver's window switch until the window is fully open.

2. Pull and hold the driver's window switch to close the window completely, then hold the switch for about 2 seconds.

If the power windows do not operate properly after resetting, have your vehicle checked by your dealer.

Back Window
Your vehicle has a power back window.

Back Window Open Indicator
This indicator comes on when you turn the ignition switch from the ON (II) position to the ACCESSORY (I) or LOCK (0) position without closing the back window. With the ignition switch in the ACCESSORY (I) position, the indicator goes off after about 30 seconds. With the ignition switch in the LOCK (0) position, the indicator goes off after about 3 minutes.

CONTINUED

Power Windows

If you remove the ignition key and open the driver's door without closing the back window, you hear five beeps and see the indicator blink. If you do not close the back window before the beeper stops, the indicator stops blinking but remains on. It will go off after about 3 minutes (see page 75).

The back window is not designed to carry long items through it. Do not use the opened back window as a cargo area pass-through.

Opening the Side Windows with the Remote Transmitter
You can open all of the side windows from the outside with the remote transmitter.

1. Press the UNLOCK button once to unlock the driver's door.

2. Press the UNLOCK button a second time, and hold it. The passenger's doors unlock, and all four side windows start to open. To stop the windows, release the button.

3. To open the windows further, press the button again, within about 3 seconds.

You cannot close the windows with the remote transmitter.

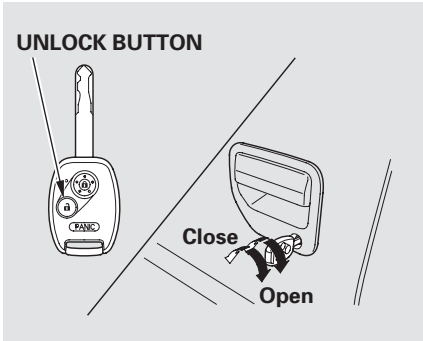

Opening/Closing the Side Windows with the Key
You can open and close the side windows with the key in the driver's door lock.

To open:
1. Insert the key in the driver's door lock.

2. Turn the key clockwise, then release it.

3. Turn the key clockwise again, and hold it. All four side windows start to open. To stop the windows, release the key.

4. To open the windows further, turn and hold the key again (within 10 seconds).

NOTE: If the windows stop before the desired position, repeat steps 2 and 3.

To close:
1. Insert the key in the driver's door lock.

2. Turn the key counterclockwise, then release it.

3. Turn the key counterclockwise again, and hold it. All four side windows start to close. To stop the windows, release the key.

4. To close the windows further, turn and hold the key again (within 10 seconds).

NOTE: If the windows stop before the desired position, repeat steps 2 and 3.

Moonroof

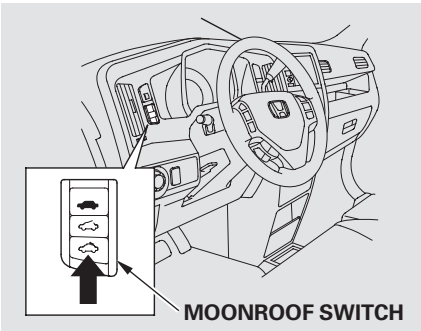

If equipped
The moonroof has two positions: it can be tilted up in the back for ventilation, or it can slide back into the roof. Use the switch near the left dashboard vent to operate the moonroof. The ignition switch must be in the ON (II) position.

CONTINUED

Moonroof, Parking Brake

To tilt up the back of the moonroof, press and hold the center part of the switch ( ). To close the moonroof, press and hold the upper part of the switch ( ). To open the moonroof, press and hold the lower part of the switch ( ). Release the switch when the moonroof gets to the desired position.

Make sure everyone's hands are away from the moonroof before opening or closing it.

⚠ WARNING

Opening or closing the moonroof on someone's hands or fingers can cause serious injury.

Make sure all hands and fingers are clear of the moonroof before opening or closing it.

You can open and close the moonroof for up to 10 minutes after you turn off the ignition switch. Opening either front door cancels this function.

NOTICE

If you try to open the moonroof in below-freezing temperatures, or when it is covered with snow or ice, you can damage the moonroof panel or its motor.

Parking Brake

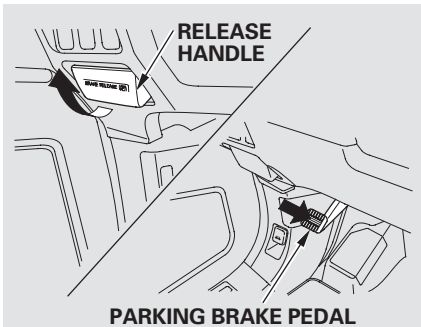

To apply the parking brake, push the pedal down with your foot. To release it, pull the release handle fully. The parking brake indicator on the instrument panel should go out when the parking brake is fully released (see page 65).

NOTICE

Driving the vehicle with the parking brake applied can damage the rear brakes and hubs. A beeper will sound if the vehicle is driven with the parking brake on.

On models with navigation system
You will also see a "RELEASE PARKING BRAKE" message on the multi-information display (see page 90).

Mirrors

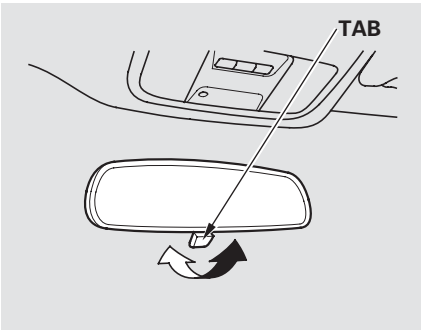

Keep the inside and outside mirrors clean and adjusted for best visibility. Be sure to adjust the mirrors before you start driving.

The inside mirror has day and night positions. The night position reduces glare from headlights behind you. Flip the tab on the bottom edge of the mirror to select the day or night position.

If equipped
The rear view mirror has a compass function to indicate the vehicle's direction.
Refer to **Compass** on page 213 .

CONTINUED

Mirrors

Adjusting the Power Mirrors

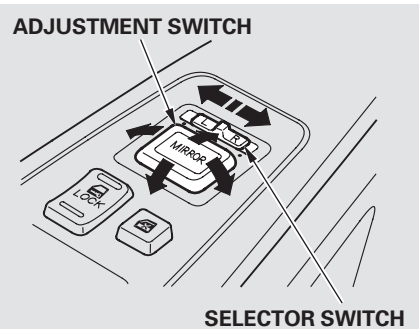

1. Turn the ignition switch to the ON (II) position.

2. Move the selector switch to L (driver's side) or R (passenger's side).

3. Push the appropriate edge of the adjustment switch to move the mirror right, left, up, or down.

4. When you finish, move the selector switch to the center (off) position. This turns the adjustment switch off to keep your settings.

Heated Mirrors

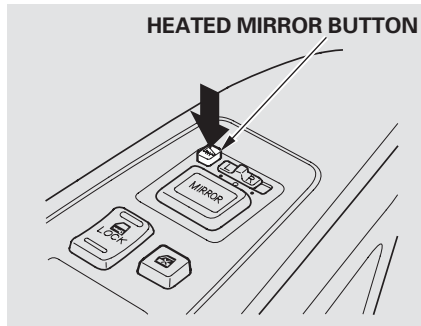

If equipped
The outside mirrors are heated to remove fog and frost. With the ignition switch in the ON (II) position, turn on the heaters by pressing the button. The indicator in the button comes on as a reminder. Press the button again to turn the heaters off.

Interior Convenience Items

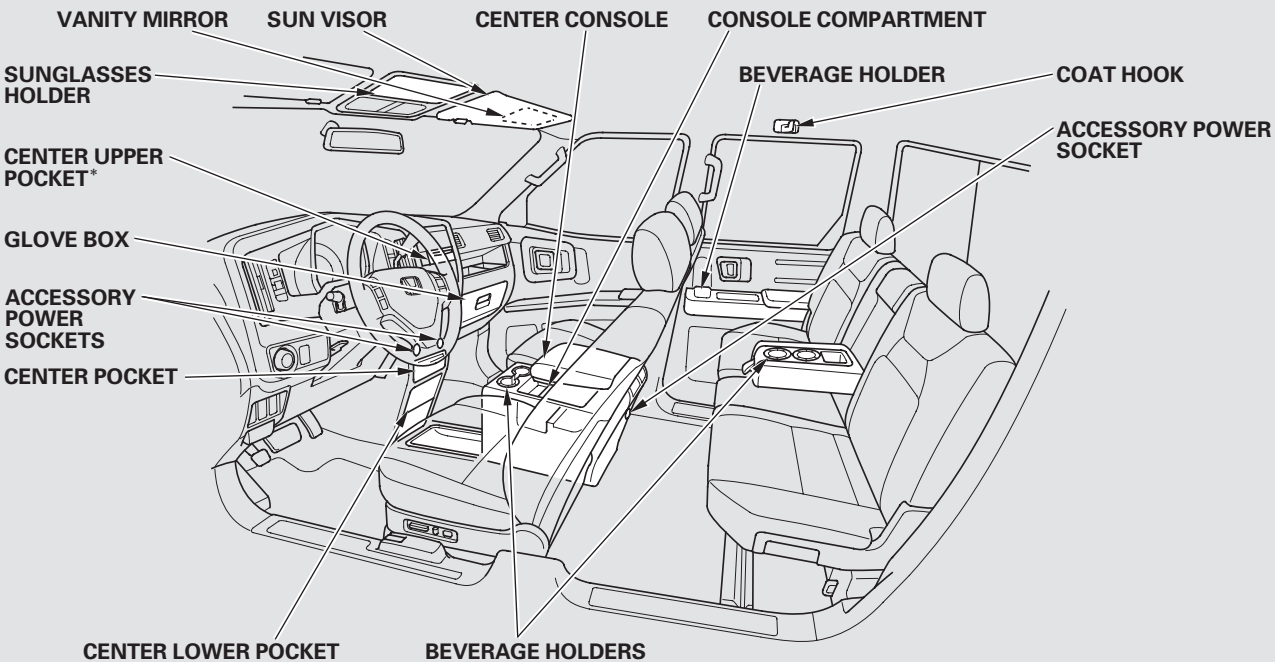

* : On vehicle without navigation system

Interior Convenience Items

Center Console

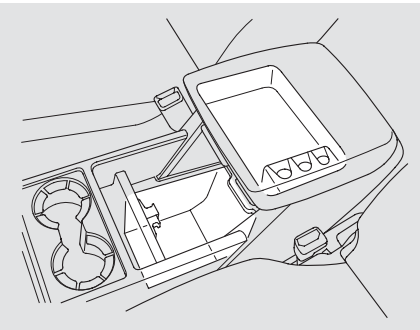

Your vehicle has a multi-function center console. It includes beverage holders, storage compartments, an armrest, a coin holder, and a storage tray.

Console Compartments

The center console main compartment is under the tray and the beverage holder. You can access the main compartment in two ways (front or rear).

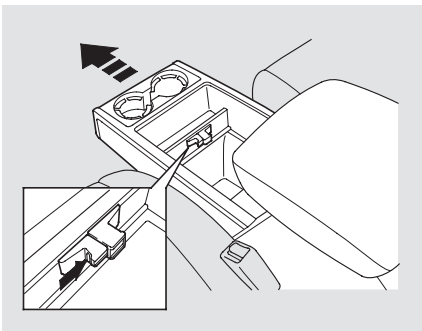

To open the front of the compartment, squeeze the knob, and push it forward while sliding the beverage holder. To close, squeeze the knob and pull the compartment backward until the beverage holder latches.

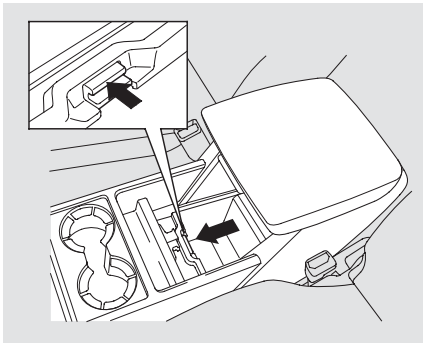

To open the rear of the compartment, push the button at the end of the tray, then slide the tray forward. To close, slide the tray back in place.

There are two removable partitions in the main compartment. The partitions can be used to divide the main compartment, or can be stored at the front of the compartment. The console compartment light comes on when the instrument panel lights are on.

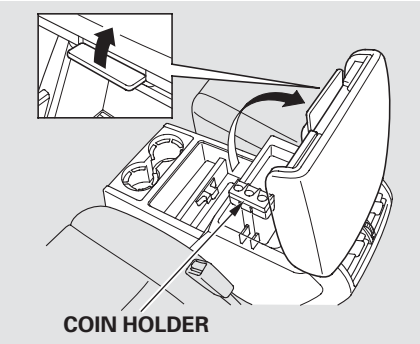

You can put small items in the upper console compartment. To use it, pull up on the lever and lift up the armrest.

The upper console compartment has a removable coin holder. Pull the coin holder straight up to remove it. To install it, push it down along the guides on the side of the compartment.

Cargo Hooks

There are two cargo hooks for plastic grocery bags at the back of the center console. They are designed to hold light items. Heavy objects may damage the hooks.

Beverage Holders

The center console has two beverage holders on the front. Your vehicle also has beverage holders in the rear seat armrest and the rear door panels.

Be careful when you are using the beverage holders. A spilled liquid that is very hot can scald you or your passengers. Liquid can also spill from the door panel beverage holders when you close the doors. Use only resealable containers in the door beverage holders.

Spilled liquids can damage the upholstery, carpeting, and electrical components in the interior.

Interior Convenience Items

Glove Box

Open the glove box by pulling up on the handle. Close it with a firm push. Lock or unlock the glove box with the master key.

The glove box light comes on when the parking lights are on.

⚠ WARNING

An open glove box can cause serious injury to your passenger in a crash, even if the passenger is wearing the seat belt.

Always keep the glove box closed while driving.

Coat Hooks

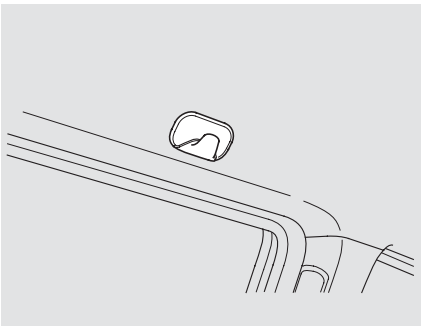

These hooks are not designed for large or heavy items.

Sunglasses Holder

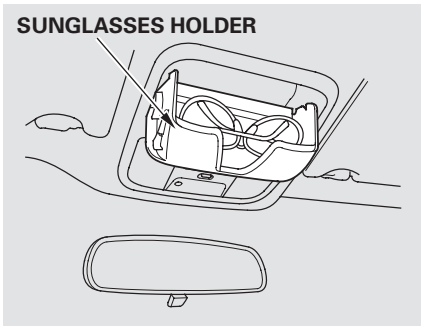

To open the sunglasses holder, push on the rear edge. Make sure the holder is closed while you are driving.

Some larger styles of sunglasses may not fit in the holder.

Accessory Power Sockets

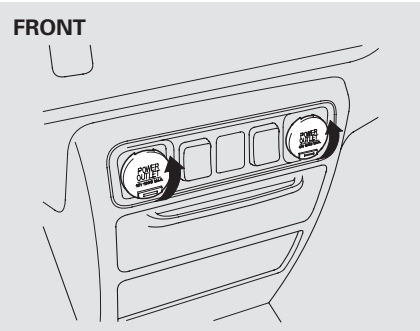

There are three accessory power sockets in your vehicle. Two accessory power sockets are above the center pocket on the dashboard, and another is on the back of the center console.

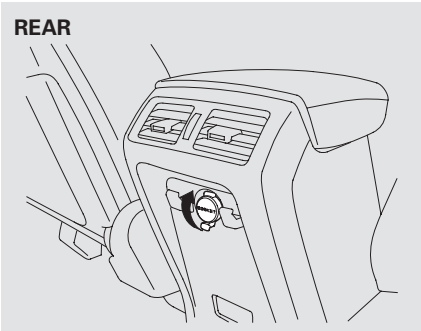

These sockets are intended to supply power for 12 volt DC accessories that are rated 120 watts or less (10 amps).

To use an accessory power socket, the ignition switch must be in the ACCESSORY (I) or ON (II) position.

None of the sockets will power an automotive type cigarette lighter element. When both sockets are being used, the combined power rating of the accessories should be 120 watts or less (10 amps).

Interior Convenience Items

Sun Visor

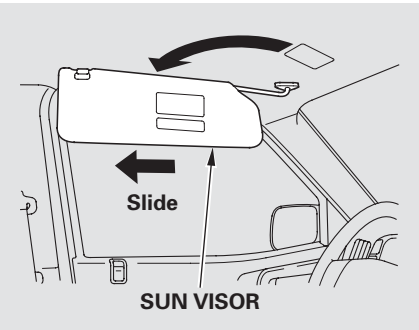

To use the sun visor, pull it down. When using the sun visor for the side window, remove the support rod from the clip, and swing it out.

In this position, the sun visor can be adjusted by moving it on its slider. Do not use the extended sun visor over the inside mirror.

Make sure you put the sun visor back in place when you are getting into or out of the vehicle.

Vanity Mirror

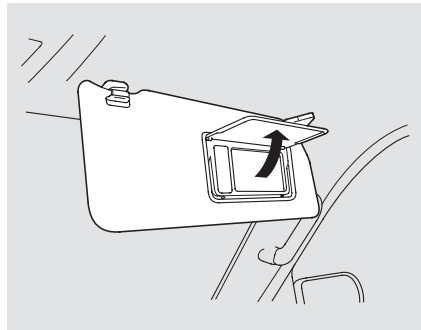

Pull up the vanity mirror cover to use it.

The light comes on when you pull up the cover.

The light will not come on if the sun visor is slid outward.

AC Power Outlet

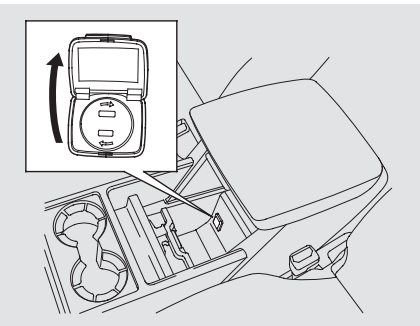

On RTL and Canadian EX-L
There is a 115 volt AC power outlet inside the front console compartment. To use the AC power outlet, open the lids and open the outlet cover. Insert the plug into the receptacle slightly, turn it 90° clockwise, then push in the plug all the way.

Always run the engine when you use the AC power outlet.

The maximum capacity for this power outlet is 115 volt AC at 100 watts or less. If you use an appliance which requires more than 100 watts, it automatically stops supplying the power. If this happens, turn the ignition switch off and turn it on again.

NOTE: The AC power outlet is not designed for electric appliances which require high initial peak wattage such as cathode-ray tube type televisions, refrigerators, electric pumps, etc. It is also not suitable for devices that process precise data such as medical equipment or measuring instruments. Any appliances that require an extremely stable power supply such as microcomputer-controlled electric blankets, touch sensor lamps, etc., should not be connected to this outlet.

Interior Lights

Interior Light Control Switch

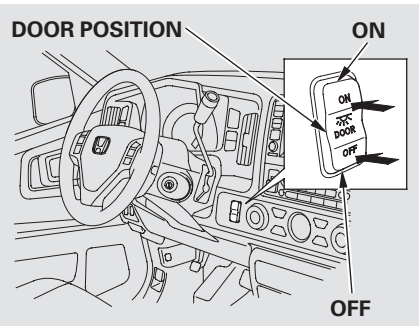

When the interior light control switch is in the ON position:

- All the individual map lights and the rear console light come on and stay on as long as the switch remains in the ON position.

When the switch is in the door position:

- The individual map lights and the rear console light come on when any door is opened, or when the remote transmitter or the key is used to unlock the doors. When the doors are closed, each individual map light can be turned on and off by pushing the lens.

  The lights fade out about 30 seconds after all the doors are closed.

  With any door left open and the key removed from the ignition switch, the lights stay on about 3 minutes, then go out.

When the switch is in the OFF position:

- None of the lights come on when a door is opened.
- The map lights in the front can be turned on and off by pushing each lens. The rear map lights cannot be used.

Individual Map Lights

Turn on a front individual map light by pushing the lens. Push the lens again to turn it off. With the interior light control switch in the door position, a rear map light can be turned on by pushing the lens. Push the lens again to turn it off.

The map lights stay on when the interior light control switch is in the door position and the map light switch is on.

Individual Interior Lights

The courtesy light in each door comes on when you open that door. The light around the ignition switch only comes on when you open the driver's door. After you close the door, the ignition switch light fades out in about 30 seconds.

The courtesy light in the back of the center console comes on when you open any door with the interior light control switch in the door position. After you close the doors, the light fades out.

Courtesy Light

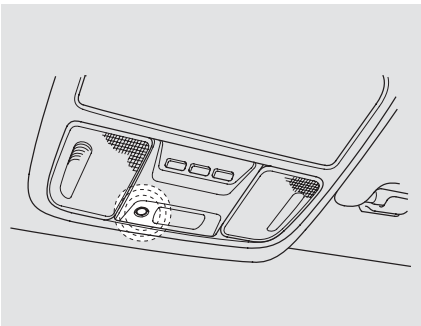

If equipped

The courtesy light between the front map lights comes on when you turn the parking lights on. To adjust its brightness, turn the instrument panel brightness control dial on the dashboard (see page 98).

Bed Lights

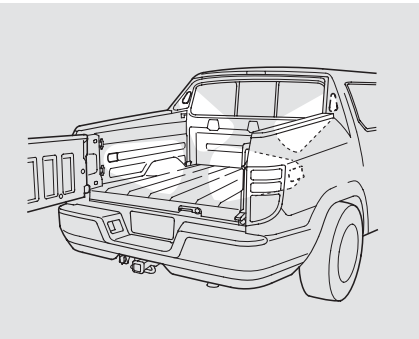

Your vehicle has bed lights in the pickup bed: a light on each front upper and rear bottom side. With the shift lever in the Park position, the bed lights come on when you push the bed light switch on the dashboard, swing open the tailgate, or open the In-Bed Trunk. The indicator on the instrument panel also comes on to remind you that the bed lights are on.

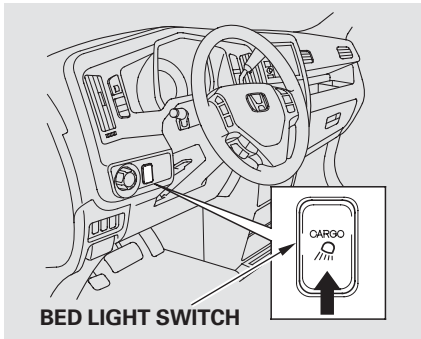

To turn off the lights, push the light switch again, or close the tailgate and the In-Bed Trunk.

When you move the shift lever out of the Park position, the bed lights go off and cannot be used.

If you turn the ignition switch to ACCESSORY (I) or LOCK (0) without turning off the bed lights, the lights and the indicator will remain on, then go off after 20 minutes (see page 74).

The heating and air conditioning system in your vehicle provides a comfortable driving environment in all weather conditions.

The standard audio system has many features. This section describes those features and how to use them.

Your vehicle has an anti-theft audio system that requires a code number to enable it.

On RTS, RTL models, and Canadian EX-L models
The security system helps to discourage vandalism and theft of your vehicle.

On models with navigation system
The climate control system and the audio system have a voice control feature. Refer to the navigation system manual for more information.

Vents, Heating, and A/C 146
Climate Control System 152
Playing the AM/FM Radio..... 159
AM/FM Radio Reception..... 165
Playing the XM® Radio 167
Playing CDs..... 173
CD Player..... 175
CD Changer
(Models without navigation system) 181
CD Changer
(Models with navigation system) 189
Protecting Your CDs..... 198
CD Player/Changer Error Messages..... 202
Remote Audio Controls..... 203
Auxiliary Input Jack..... 205
Radio Theft Protection..... 206
Setting the Clock 207
Security System 208
Cruise Control..... 210
Compass..... 213
HomeLink® Universal Transceiver..... 217
Bluetooth® HandsFreeLink® 221
Rearview Camera and Monitor.... 246

Vents, Heating, and A/C

On RTS, RTL and Canadian EX-L models
See page 152 for automatic climate control and semi-automatic operation information.

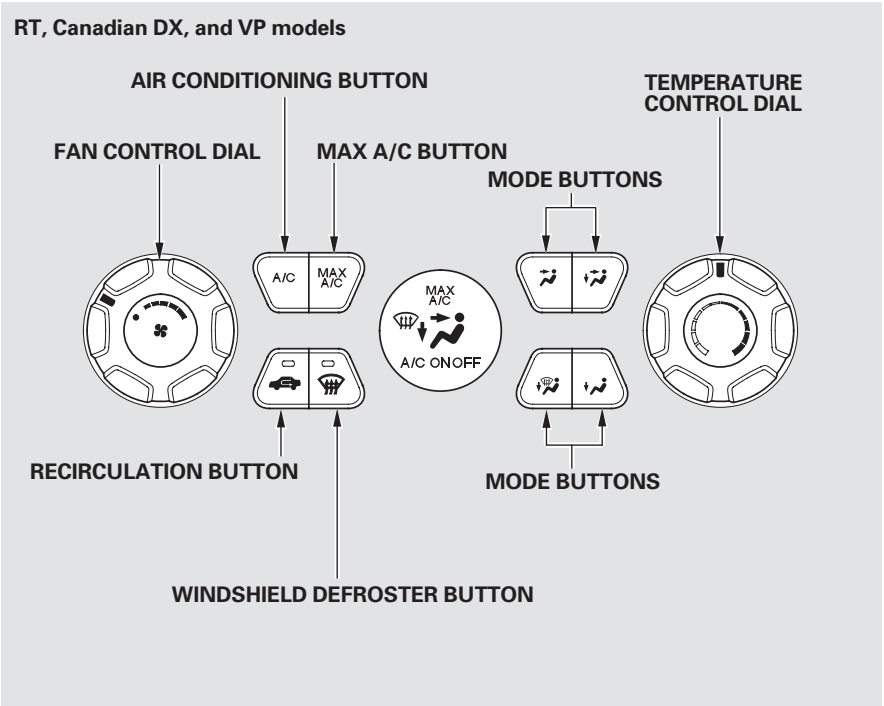

Fan Control Dial
Turn this dial to increase or decrease the fan speed and airflow.

Temperature Control Dial
Turning this dial clockwise increases the temperature of the airflow.

Air Conditioning (A/C) Button
This button turns the air conditioning on and off. You will see A/C ON or A/C OFF in the display.

Recirculation Button
When the indicator in the button is on, air from the vehicle's interior is sent throughout the system again. When the indicator is off, air is brought in from the outside of the vehicle (fresh air mode).

The outside air intakes for the heating and cooling system are at the base of the windshield. Keep this area clear of leaves and other debris.

The system should be left in fresh air mode under almost all conditions. Keeping the system in recirculation mode, particularly with the A/C off, can cause the windows to fog up.

Switch to recirculation mode when driving through dusty or smoky conditions, then return to fresh air mode.

Vents, Heating, and A/C

Mode Control
Use the mode control buttons to select the vents air flows from. Some air will flow from the dashboard corner vents in all modes.

Air flows from the center, corner, and rear vents in the dashboard.

Airflow is divided between the vents in the dashboard, rear and the floor vents.

Air flows from the floor vents. When you select , the system automatically switches to fresh air mode.

Airflow is divided between the floor vents and defroster vents at the base of the windshield.

Windshield Defroster Button
Air flows from the defroster vents at the base of the windshield.

When you select , the system automatically switches to fresh air mode and turns on the A/C.

MAX A/C Button
MAX A/C The system automatically turns on the A/C and switches to Recirculation mode. Air flows from the center and side vents in the dashboard.

When you switch to from MAX A/C, the A/C stays on, and you can turn it on and off manually.

Ventilation
The ventilation system draws in outside air, circulates it through the interior, then exhausts it through vents near the back window.

1. Set the temperature to the lower limit.
2. Make sure the A/C is off.
3. Select and fresh air mode.
4. Set the fan to the desired speed.

Using the Heater
The heater uses engine coolant to warm the air. If the engine is cold, it will be several minutes before you feel warm air coming from the system.

1. Select .
   When you select , the system automatically switches to the fresh air mode.
2. Set the fan to the desired speed.
3. Adjust the warmth of the air with the temperature control dial.

Using the A/C
Air conditioning places an extra load on the engine. Watch the engine coolant temperature gauge (see page 76). If it moves near the red mark, turn off the A/C until the gauge reads normally.

1. Set the fan to the desired speed.
2. Turn on the A/C by pressing the button. You will see A/C ON in the display.
3. Make sure the temperature is set to the lower limit.
4. Select .
5. If the outside air is humid, select recirculation mode. If the outside air is dry, select fresh air mode.

CONTINUED

Vents, Heating, and A/C

If the interior is very warm, you can cool it down more rapidly by partially opening the windows, turning on the A/C, and setting the fan to maximum speed in fresh air mode.

Dehumidify the Interior
Air conditioning, as it cools, removes moisture from the air. When used in combination with the heater, it makes the interior warm and dry.

1. Turn the fan on.
2. Press the A/C button.
3. Select and fresh air mode.
4. Adjust the temperature to your preference.

This setting is suitable for all driving conditions whenever the outside temperature is above 32°F (0°C).

To Defog and Defrost
To remove fog from the inside of the windows:

1. Set the fan to the desired speed, or high for faster defrosting.
2. Select . The system automatically switches to fresh air mode and turns on the A/C. The A/C ON indicator will not be displayed if it was off to start with.
3. Adjust the temperature so the airflow feels warm.
4. To increase airflow to the windshield, close the corner vents.

When you switch to another mode from , the A/C turns off. But if it was on to start with, it stays on.

Automatic Heated Wiper Zone
Your vehicle has heating wires at the bottom of the windshield to help heat the wiper blades and the windshield. If the outside temperature is near freezing, the heater turns on automatically when you turn the ignition switch to the ON (II) position. The heater turns off automatically when the outside temperature is above freezing.

This function helps to increase wiper performance when the wiper arms sit in the parked position in snowy or icy conditions.

To Remove Exterior Frost or Ice From the Windows

1. Set the fan and temperature controls to maximum level.
2. Select . The system automatically switches to fresh air mode and turns on the A/C. The A/C ON indicator will not be displayed if it was off to start with.
3. Select .

To clear the windows faster, you can close the dashboard corner vents by rotating the wheel next to (passenger's side) or below it (driver's side). This will send more warm air to the windshield defroster vents. Once the windshield is clear, select fresh air mode to avoid fogging the windows.

For your safety, make sure you have a clear view through all the windows before driving.

To Turn Everything Off

Turning the fan speed control dial all the way to the left shuts the system off.

- Keep the system off for short periods only.
- To keep stale air and mustiness from collecting, you should have the fan running at all times.

Rear Ventilation

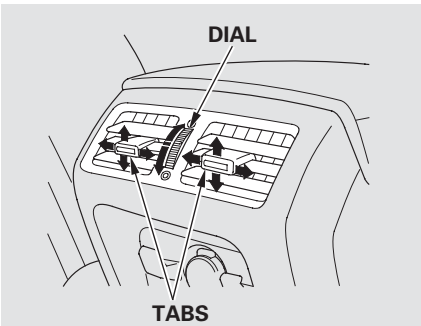

You can adjust the direction of the air coming from the rear vents in the back of the center console by moving the tab in the center of each vent up-and-down and side-to-side.

You can also adjust the amount of airflow by turning the dial between the vents.

Climate Control System

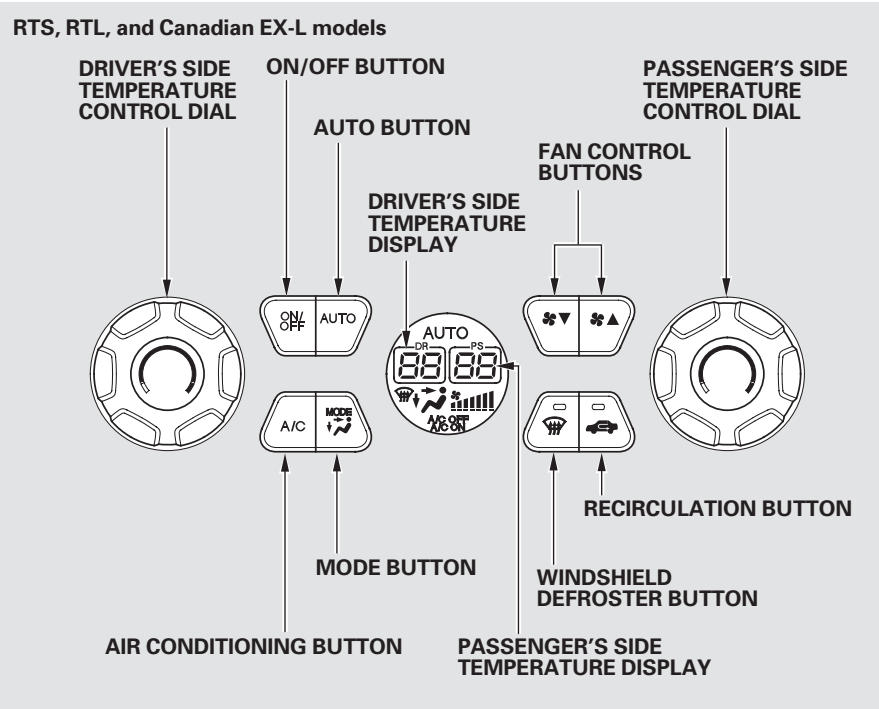

Voice Control System

On models with navigation system

The climate control system can also be operated by voice control.
See the navigation system manual for complete details.

Using Automatic Climate Control
The automatic climate control system in your vehicle maintains the interior temperature you select. The system also adjusts the fan speed and airflow levels.

1. Press the Auto button on the front control panel. You will see AUTO in the system display.

2. Adjust the temperature for the driver's and passenger's side separately, using the desired temperature control dial.

The passenger's side temperature setting does not synchronize to the driver's side at any time except when the system is in the defroster mode (see page 155).

The system automatically selects the proper mix of conditioned and/or heated air that will, as quickly as possible, raise or lower the interior temperature to your preference.

Temperature Control
The driver's and passenger's side temperatures should always be set separately. Turn the desired dial clockwise to increase the airflow temperature of that side, and counterclockwise to decrease it.

When you set either side temperature to its lower limit (Lo) or its upper limit (Hi), the system runs at full cooling or heating only. It does not regulate the interior temperature.

When you press a fan control button, the fan is taken out of AUTO mode.

CONTINUED

Climate Control System

On models with navigation system
In AUTO mode, the vehicle's temperature is independently regulated, based on the driver's and passenger's side setting. The system also regulates each temperature based on the information of the sun light sensor and the sun's position which is updated automatically by the navigation's global positioning system (GPS). For example, if the driver's side of the vehicle is getting too much sun, the system will adjust to a lower temperature.

To Turn Everything Off
To turn the system completely off, press the ON/OFF button.

- Keep the system completely off for short periods only.
- To keep stale air and mustiness from collecting, you should have the fan running at all times.

Semi-automatic Operation
You can manually select various functions of the climate control system when it is in fully automatic mode. All other features remain automatically controlled. Making any manual selection causes the word AUTO in the display to go out.

Fan Control
Press the ▲ button to increase the fan speed and airflow. Press the ▼ button to decrease it.

Air Conditioning (A/C) Button
This button turns the air conditioning on and off. You will see A/C ON or A/C OFF in the display.

When you turn the A/C off, the system cannot regulate the inside temperature if you set the temperature control below the outside temperature.

Recirculation Button
When the indicator in the button is on, air from the vehicle's interior is sent through the system again. When the indicator is off, air is brought in from the outside of the vehicle (fresh air mode).

The outside air intakes for the climate control system are at the base of the windshield. Keep this area clear of leaves and other debris.

The system should be left in fresh air mode under almost all conditions. Keeping the system in recirculation mode, particularly with the A/C off, can cause the windows to fog up.

Switch to recirculation mode when driving through dusty or smoky conditions, then return to fresh air mode.

Mode Control
Use the mode control button to select the vents the air flows from. Some air will flow from the dashboard vents in all modes.

Air flows from the center, corner, and rear vents in the dashboard.

Airflow is divided between the vents in the dashboard, rear and the floor vents.

Air flows from the floor vents.

Airflow is divided between the floor and corner vents and the defroster vents at the base of the windshield.

Windshield Defroster Button
This button directs the main airflow to the windshield for faster defrosting. It also overrides any mode selection you may have made.

When you select , the system automatically switches to fresh air mode and turns on the A/C. For faster defrosting, manually set the fan speed to high. You can also increase airflow to the windshield by closing the corner vents on the dashboard. To close the vents, rotate the wheel under each corner vent.

When you turn off by pressing the button again, the system returns to its former settings.

CONTINUED

Climate Control System

For your safety, make sure you have a clear view through all the windows before driving.

When the indicator in the button is on, the passenger's side temperature automatically adjusts to the driver's side temperature.

Automatic Heated Wiper Zone
Your vehicle has heating wires at the bottom of the windshield to help heat the wiper blades and the windshield. If the outside temperature is near freezing, the heater turns on automatically when you turn the ignition switch to the ON (II) position. The heater turns off automatically when the outside temperature is above freezing.

This function helps to increase wiper performance when the wiper arms sit in the parked position in snowy or icy conditions.

Rear Ventilation

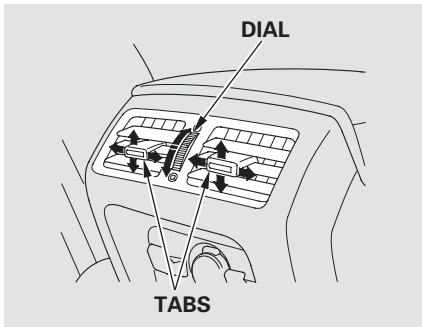

You can adjust the direction of the air coming from the rear vents in the back of the center console by moving the tab in the center of each vent up-and-down and side-to-side.

You can also adjust the amount of airflow by turning the dial between the vents.

Dual Temperature Control
The temperatures of the driver's side and the front passenger's side are controlled independently.

To adjust each temperature, turn either of the temperature control dials on the climate control panel.

When you set each temperature to its lower limit or its upper limit, it will be displayed as " Lo " or " Hi ".

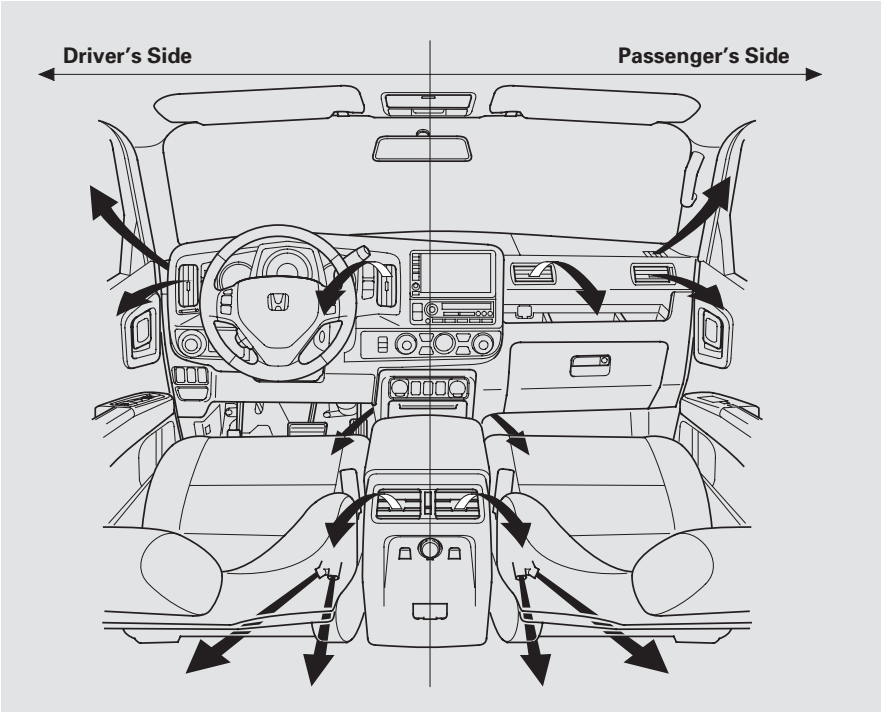

Climate Control System

Sunlight and Temperature Sensors

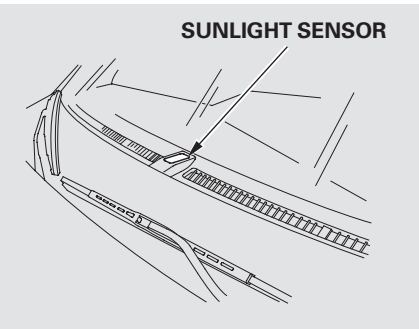

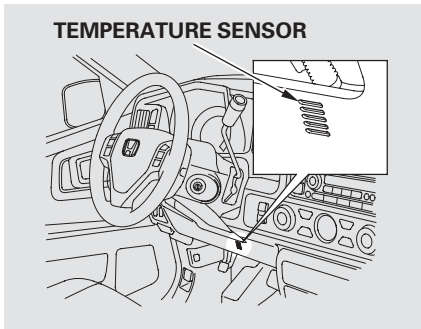

The climate control system has two sensors. A sunlight sensor is in the top of the dashboard, and a temperature sensor is under the steering column. Do not cover the sensors or spill any liquid on them.

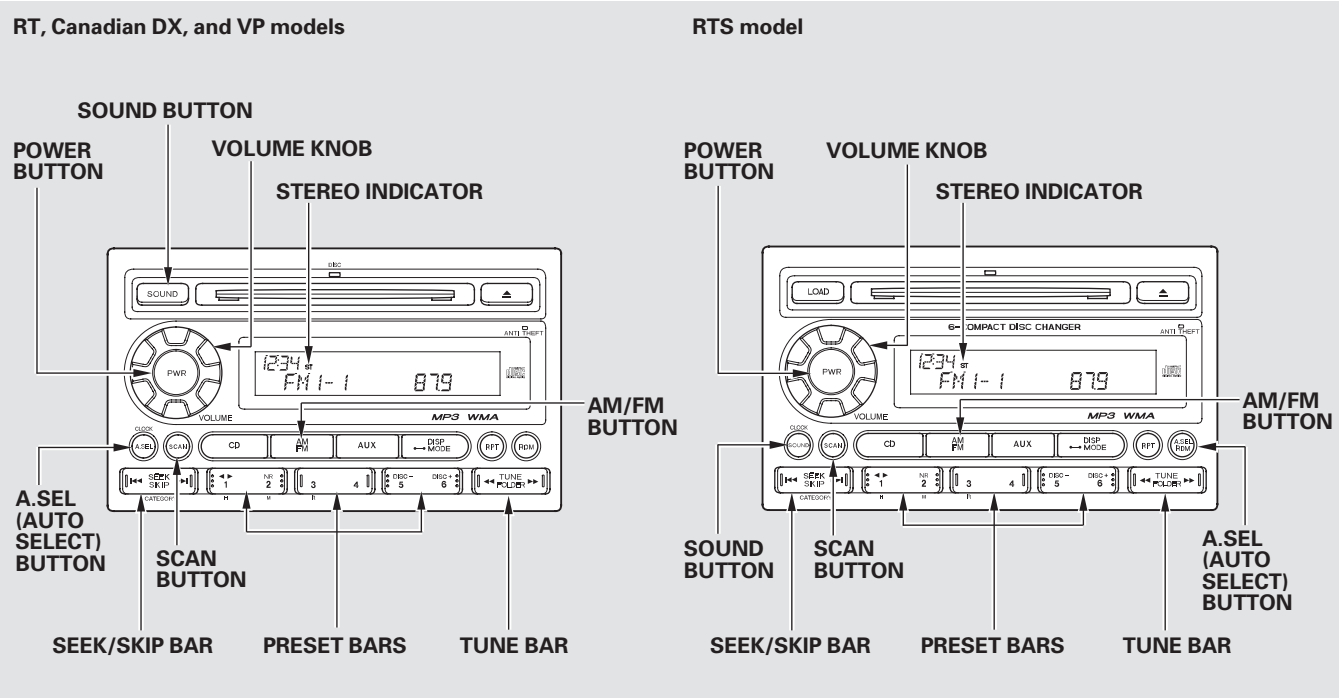
RT, Canadian DX, and VP models
SOUND BUTTON
POWER BUTTON
VOLUME KNOB
STEREO INDICATOR
AM/FM BUTTON
A.SEL (AUTO SELECT) BUTTON
SCAN BUTTON
SEEK/SKIP BAR
PRESET BARS
TUNE BAR
RTS model
POWER BUTTON
VOLUME KNOB
STEREO INDICATOR
AM/FM BUTTON
SOUND BUTTON
SCAN BUTTON
A.SEL (AUTO SELECT) BUTTON
SEEK/SKIP BAR
PRESET BARS
TUNE BAR

CONTINUED

Playing the AM/FM Radio

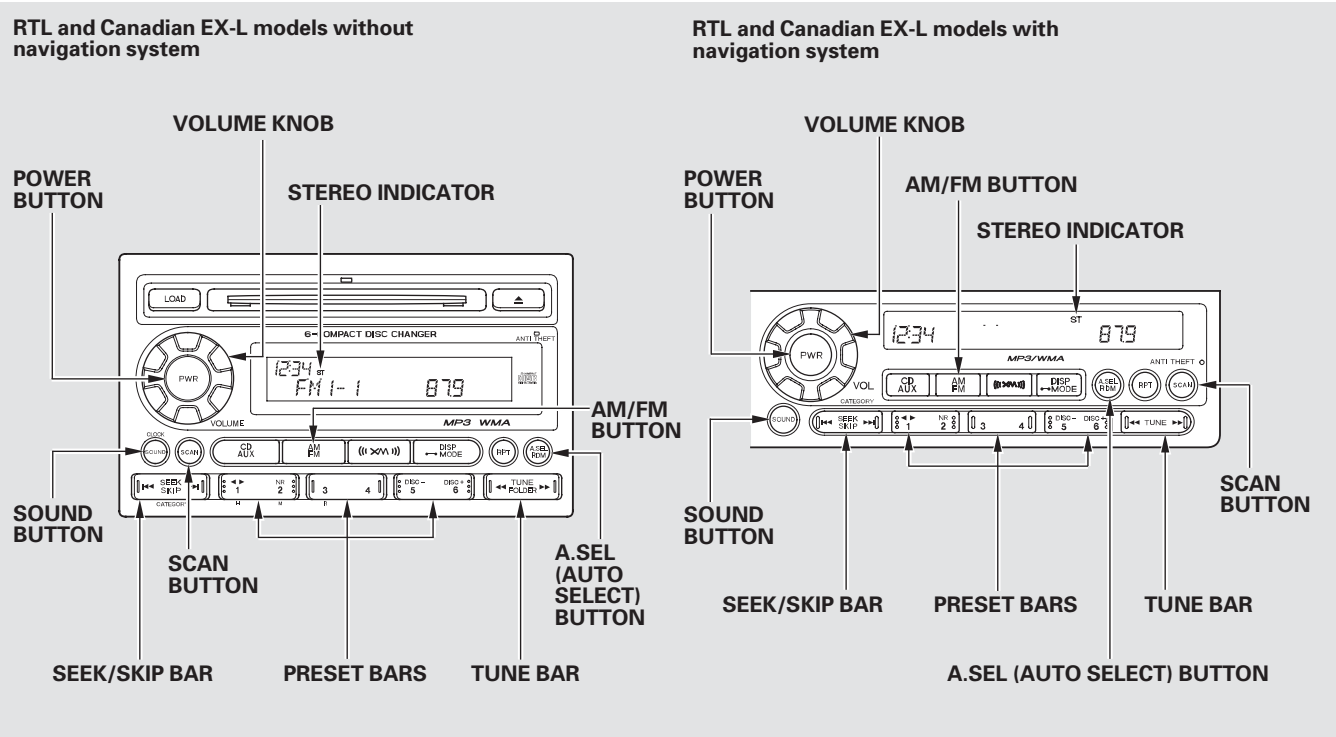

To Play the AM/FM Radio
The ignition switch must be in the ACCESSORY (I) or ON (II) position. Turn the system on by pushing the PWR button or the AM/FM button. Adjust the volume by turning the volume knob.

On models with navigation system
Pushing the AUDIO button will also turn on the system (see page 163).

The band and frequency that the radio was last tuned to are displayed. To change bands, press the AM/FM button. On the FM band, ST will be displayed if the station is broadcasting in stereo. Stereo reproduction in AM is not available.

On the AM band, AM noise reduction turns on automatically.

To Select a Station
You can use any of five methods to find radio stations on the selected band: tune, seek, scan, the preset bars, and auto select.

TUNE — Use the TUNE bar to tune the radio to a desired frequency. Press the ►► side of the bar to tune to a higher frequency, and press the ◄◄ side to tune to a lower frequency.

SEEK — The SEEK function searches up and down from the current frequency to find a station with a strong signal. To activate it, press the |◄◄ or ►►| side of the SEEK/SKIP bar, then release it.

SCAN — The scan function samples all stations with strong signals on the selected band. To activate it, press the SCAN button, then release it. You will see SCAN in the display. When the system finds a strong signal, it will stop and play that station for about 10 seconds.
If you do nothing, the system will scan for the next strong station and play it for 10 seconds. When it plays a station that you want to listen to, press the SCAN button again.

Preset — Each side of the bars (1—6) can store one frequency on AM and two frequencies on FM.

1. Select the desired band, AM or FM. FM1 and FM2 let you store six stations each.

2. Use the tune, seek, or scan function to tune the radio to a desired station.

3. Pick a preset number (1—6), and hold it until you hear a beep.

4. Repeat steps 1 through 3 to store a total of six stations on AM and twelve stations on FM.

CONTINUED

Playing the AM/FM Radio

AUTO SELECT — If you are traveling far from home and can no longer receive your preset stations, you can use the auto select feature to find stations in the local area.

Press the A. SEL button. "A.SEL" flashes in the display, and the system goes into scan mode for several seconds. It stores the frequencies of six AM, and twelve FM stations in the preset bars.

You will see a "0" displayed after pressing a preset bar if auto select cannot find a strong station for every preset bar.

If you do not like the stations auto select has stored, you can store other frequencies on the preset bars as previously described.

To turn off auto select, press the A. SEL (auto select) button. This restores the presets you originally set.

For information on FM/AM radio frequencies and reception, see page 165 .

Adjusting the Sound
Press the SOUND button repeatedly to display the SUBWOOFER (if equipped), BASS, TREBLE, FADER, and BALANCE settings.

Each mode is shown in the display as it changes. Turn the VOLUME knob to adjust the setting to your liking. When the level reaches the center, you will see " [" in the display. The system will automatically return the display to the selected audio mode about 10 seconds after you stop adjusting a mode.

If equipped
SUBWOOFER — Adjusts the strength of sound from the subwoofer speaker.

BASS — Adjusts the bass.

TREBLE — Adjusts the treble.

FADER — Adjusts the front-to-back strength of the sound.

BALANCE — Adjusts the side-to-side strength of the sound.

Operating the Radio on the Navigation System Screen

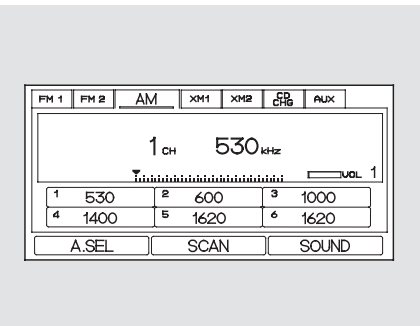

On models with navigation system
In addition to the knobs, buttons, and bars on the radio control panel, you can operate some of the radio controls on the navigation system screen.

While you are listening to the radio, you can change to another band by pressing the AUDIO button next to the navigation system screen, and then touching the desired band icon (FM1, FM2, or AM).

AUTO SELECT, SCAN, and SOUND are adjustable from the navigation screen. For an explanation of these functions, see pages 161 and 162 .

AUTO SELECT — Touch the A.SEL icon to activate the auto select function. You will see A.SEL flashing on the display.

SCAN — Touch the SCAN icon to activate the scan function. You will see SCAN on the display. Touch the icon again to deactivate it.

Adjusting the Sound

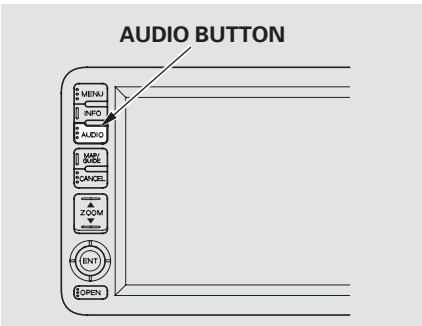

To adjust the sound, push the AUDIO button, then enter the sound grid by touching the SOUND icon on the display.

CONTINUED

Playing the AM/FM Radio

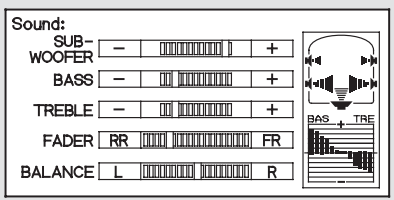

Treble/Bass — To adjust the treble and bass, touch + or — on each side of the treble or bass adjustment bar. The adjustment bar shows you the current setting.

Left/Right Balance and Front/Rear Fader — These modes adjust the strength of the sound coming from each speaker. Left/Right balance adjusts the side-to-side strength, while Front/Rear fader adjusts the front-to-back strength. To adjust the left/right balance, touch the "L" or "R" icon. To adjust the front/rear fader, touch the "FR" or "RR" icon.

SUBWOOFER — Adjusts the strength of sound from the subwoofer speaker.

To see the audio display when you are finished adjusting the sound, wait 5 seconds.

Voice Control System
On models with navigation system
The audio system can also be operated by voice control. See the navigation system manual for complete details.

Audio System Lighting
You can use the instrument panel brightness control dial to adjust the illumination of the audio system (see page 98). The audio system illuminates when the parking lights are on, even if the radio is off.

Radio Frequencies
The radio can receive the complete AM and FM bands.
Those bands cover these frequencies:

AM band: 530 to 1,710 kHz
FM band: 87.7 to 107.9 MHz

Radio stations on the AM band are assigned frequencies at least 10 kHz apart (530, 540, 550). Stations on the FM band are assigned frequencies at least 0.2 MHz apart (87.9, 88.1, 88.3).

Stations must use these exact frequencies. It is fairly common for stations to round-off the frequency in their advertising, so your radio could display a frequency of 100.9 even though the announcer may identify the station as “FM101.”

Radio Reception
How well the radio receives stations is dependent on many factors, such as the distance from the station’s transmitter, nearby large objects, atmospheric conditions, and even items stored on the roof rack.

A radio station’s signal gets weaker as you get farther away from its transmitter. If you are listening to an AM station, you will notice the sound volume becoming weaker, and the station drifting in and out. If you are listening to an FM station, you will see the stereo indicator flickering off and on as the signal weakens. Eventually, the stereo indicator will go off and the sound will fade completely as you get out of range of the station’s signal.

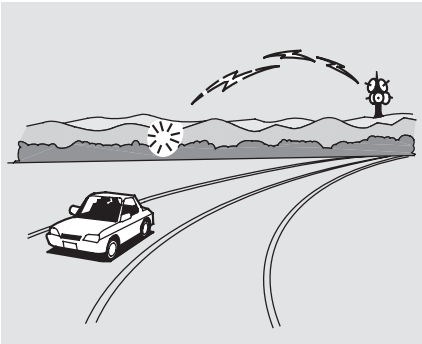

Driving very near the transmitter of a station that is broadcasting on a frequency close to the frequency of the station you are listening to can also affect your radio’s reception. You may temporarily hear both stations, or hear only the station you are close to.

CONTINUED

AM/FM Radio Reception

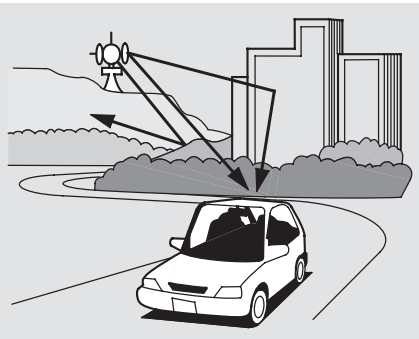

Radio signals, especially on the FM band, are deflected by large objects such as buildings and hills. Your radio then receives both the direct signal from the station's transmitter, and the deflected signal. This causes the sound to distort or flutter. This is a main cause of poor radio reception in city driving.

Radio reception can be affected by atmospheric conditions such as thunderstorms, high humidity, and even sunspots. You may be able to receive a distant radio station one day and not receive it the next day because of a change in conditions.

Electrical interference from passing vehicles and stationary sources can cause temporary reception problems.

As required by the FCC:
Changes or modifications not expressly approved by the party responsible for compliance could void the user's authority to operate the equipment.

RTL and Canadian EX-L models without navigation system

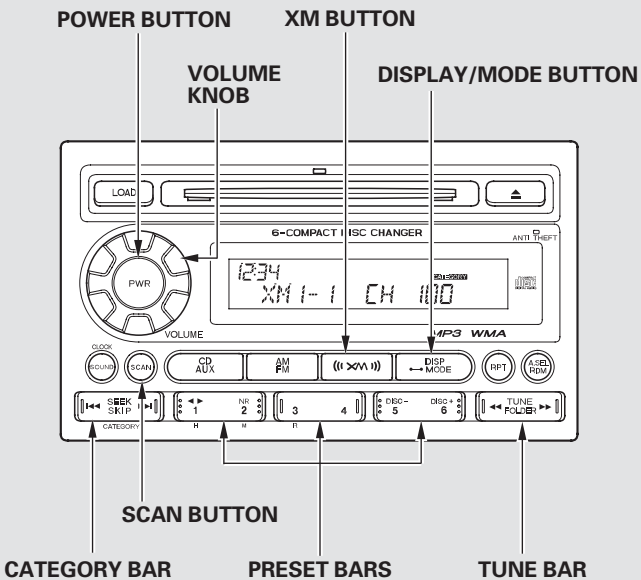

RTL and Canadian EX-L models with navigation system

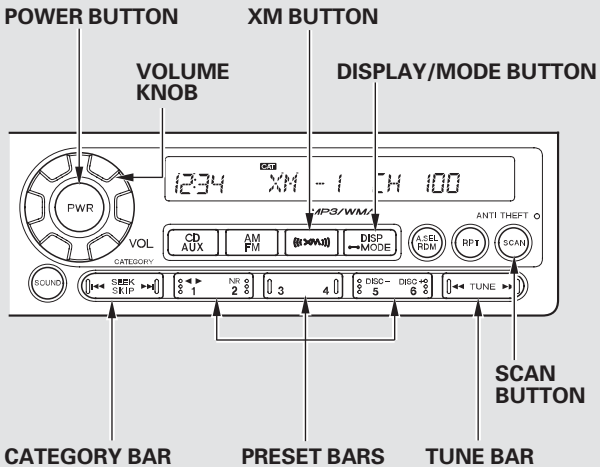

CONTINUED

Playing the XM® Radio

On RTL and Canadian EX-L models
Your vehicle is capable of receiving XM® Radio anywhere in the United States and Canada, except Hawaii, Alaska, and Puerto Rico. XM is a registered trademark of Sirius XM Radio®, Inc. and XM CANADA® is a registered business name of Canadian Satellite Radio Inc.
XM Radio receives signals from two satellites to produce clear, high-quality digital reception. It offers many channels in several categories. Along with a large selection of different types of music, XM Radio allows you to view channel and category selections in the display. The navigation system screen also shows all XM information when the AUDIO button is pressed.

Operating the XM Radio
To listen to XM radio, turn the ignition switch to the ACCESSORY (I) or ON (II) position. Push the PWR button to turn on the audio system, and press the XM button. Adjust the volume by turning the volume knob. The last channel you listened to will show in the display.

You can also change to the XM Radio while you are listening to an FM station, AM station, CD, etc. by touching the XM1 or XM2 icon on the audio display (navigation system screen).

MODE — To switch between channel mode and category mode, press and hold the DISP/MODE button until the mode changes.
In channel mode, you can select all of the available channels. In category mode, such as Jazz, Rock, Classical, etc., you can select all of the channels within that category.
Each time you press and release the DISP/MODE button, the display changes in the following sequence: Channel name, channel number, category, artist name, and music title.

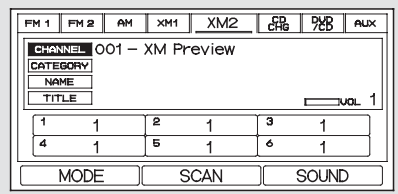

On vehicles with navigation system

On the audio display, you will see the selected CHANNEL (number), CATEGORY, NAME (artist name), and TITLE (music title).

You may experience periods when XM Radio does not transmit the artist's name and song title information. If this happens, there is nothing wrong with your system.

TUNE — Press the TUNE bar to change channel selections. Press ►► for higher numbered channels and ◄◄ for lower numbered channels. In the category mode, you can only select channels within that category.

SEEK/SKIP (CATEGORY) — Press either side of the CATEGORY bar (|◄◄ or ►►|) to select another category.

SCAN — The scan function gives you a sampling of all channels while in the channel mode. In the category mode, only the channels within that category are scanned. To activate scan, press the SCAN button or touch the SCAN icon on the screen. The system plays each channel in numerical order for a few seconds, then selects the next channel. When you hear a channel you want to listen to, press the button or touch the icon again.

Preset — You can store up to 12 preset channels using each side of the preset bar or preset icons on the screen. Each side of the bar stores one channel from the XM1 band and one channel from the XM2 band.

To store a channel:

1. Press the XM button. Either XM1 or XM2 will show in the display.
2. Use the tune, seek, or scan function to tune to a desired channel.

In category mode, only channels within that category can be selected. In channel mode, all channels can be selected.

3. Pick a preset number (icon) you want for that channel. Press and hold the bar (icon) until you hear a beep.
4. Repeat steps 2 and 3 to store the first six channels.
5. Press the XM button again or touch the other XM icon (XM1 or XM2) on the audio display. Store the next six channels using steps 2 and 3.

Once a channel is stored, press and release the proper side of the preset bar (icon) to tune to it.

Playing the XM® Radio

XM Radio Display Messages

"LOADING" — XM is loading the audio or program information.

"OFF AIR" — The channel currently selected is no longer broadcasting.

"UPDATING" — The encryption code is being updated. Wait until the encryption code is fully updated. Channels 0 and 1 should still work normally.

"NO SIGNAL" — The signal is currently too weak. Move the vehicle to an area away from tall buildings, and with an unobstructed view of the southern horizon.

" - - - - " — The selected channel number does not exist, or is not part of your subscription, or this channel has no artist or title information at this time.

"ANTENNA" — There is a problem with the XM antenna. Please consult your dealer.

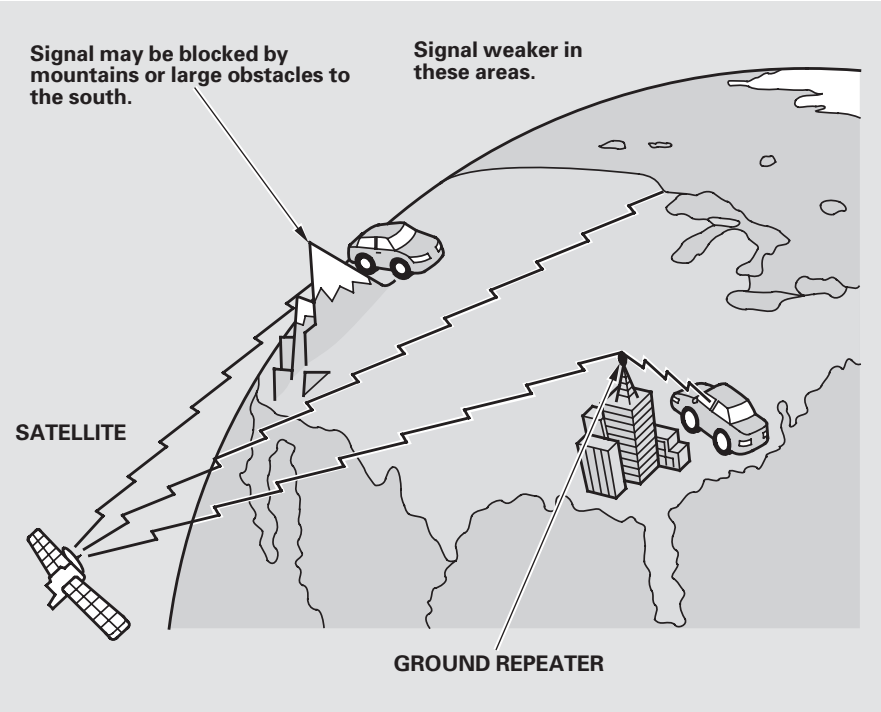

The XM satellites are in orbit over the equator; therefore, objects south of the vehicle may cause satellite reception interruptions. To help compensate for this, ground-based repeaters are placed in major metropolitan areas.

Satellite signals are more likely to be blocked by tall buildings and mountains the farther north you travel from the equator. Carrying large items on a roof rack can also block the signal.

CONTINUED

Playing the XM® Radio

Depending on where you drive, you may experience reception problems. Interference can be caused by any of these conditions:

- Driving on the north side of an east/west mountain road.
- Driving on the north side of a large commercial truck on an east/west road.
- Driving in tunnels.
- Driving on a road beside a vertical wall, steep cliff, or hill to the south of you.
- Driving on the lower level of a multi-tiered road.
- Driving on a single lane road alongside dense trees taller than 50 ft. (15 m) to the south of you.
- Large items carried on a roof rack.

There may be other geographic situations that could affect XM Radio reception.

As required by the FCC:
Changes or modifications not expressly approved by the party responsible for compliance could void the user's authority to operate the equipment.

Receiving XM Radio Service
If your XM Radio service has expired or you purchased your vehicle from a previous owner, you can listen to a sampling of the broadcasts available on XM Radio. With the ignition switch in the ACCESSORY (I) or ON (II) position, push the PWR button to turn on the audio system and press the XM button. A variety of music types and styles will play.

If you decide to purchase XM Radio service, contact XM Radio at *www.xmradio.com*, or at 1-800-852-9696. In Canada, contact XM CANADA® at *www.xmradio.ca*, or at 1-877-209-0079. You will need to give them your radio I.D. number and your credit card number. To get your radio I.D. number, press the TUNE bar until "0" appears in the display. Your I.D. will appear in the display.

After you've registered with XM Radio, keep your audio system in the XM radio mode while you wait for activation. This should take about 30 minutes.

While waiting for activation, make sure your vehicle remains in an open area with good reception. Once your audio system is activated, you'll be able to listen to XM Radio broadcasts. XM Radio will continue to send an activation signal to your vehicle for at least 12 hours from the activation request. If the service has not been activated after 36 hours, contact XM® Radio. In Canada, contact XM CANADA®.

On RT, Canadian DX, and VP models
You operate the CD player with the same controls used for the radio. See page 175 for the CD player operation information.

On RTS, RTL and Canadian EX-L models
You operate the CD changer with the same controls used for the radio.

For models without navigation system, see pages 181 through 188 .

For models with navigation system, see pages 189 through 197 .

This audio system can also play CD-Rs and CD-RWs compressed in MP3 or WMA formats. When playing a disc in MP3, you will see "MP3" in the display. In WMA format, "WMA" will appear in the display.

On models without navigation system
You can select up to 999 tracks/files. If the number of tracks/files is 1,000 or more, the system can not access them.
When there are more than 99 folders in a disc, the display only shows two digits.

On models with navigation system
You can select up to 400 tracks/files in a disc.
A disc can support a maximum number of 100 folders, and each folder can hold 255 playable files.

If you have a disc that is a combination of CD-DA tracks and MP3/WMA files, you can choose the format to listen by pressing and holding CD/AUX or CD button until you hear a beep.

NOTE:
If a file on an MP3 or WMA disc is protected by digital rights management (DRM), the audio unit displays UNSUPPORTED (UNSUPPORT on models with navigation system), and then skips to the next file.

Video CDs and DVDs do not work in this unit.

CONTINUED

Playing CDs

The specifications for compatible MP3 files are:
- Sampling frequency:
  32/44.1/48 kHz (MPEG1)
  16/22.05/24 kHz (MPEG2)
- Bitrate:
  32/40/48/56/64/80/96/112/128/160/192/224/256/320 kbps (MPEG1)
  8/16/24/32/40/48/56/64/80/96/112/128/160 kbps (MPEG2)
- Compatible with variable bitrate and multi-session
- Maximum layers (including ROOT):
  On models without navigation system
  8 layers
  On models with navigation system
  99 layers

The specifications for compatible WMA files are:
- Sampling frequency:
  32/44.1/48 kHz
- Bitrate:
  48/64/80/96/128/160/192 kbps
- Compatible with variable bitrate and multi-session
- Maximum layers (including ROOT):
  On models without navigation system
  8 layers
  On models with navigation system
  99 layers

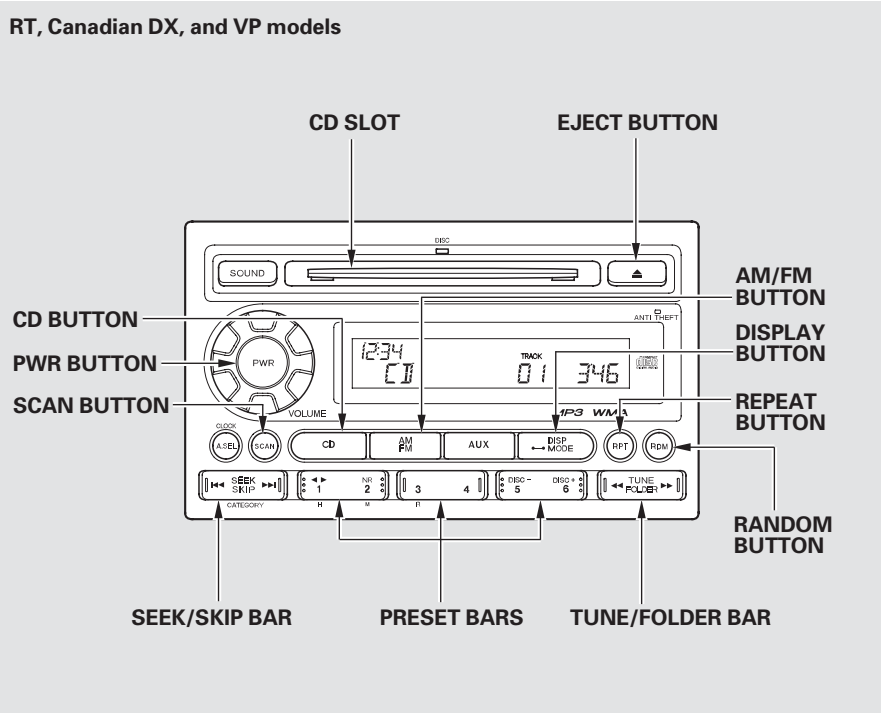

On RT, Canadian DX, and VP models

To Play a Disc

To load or play a disc, the ignition switch must be in the ACCESSORY (I) or ON (II) position.

You operate the disc player with the same controls used for the radio. To select the disc player, press the CD button. You will see “CD” in the display.

NOTICE

Do not use discs with adhesive labels. The label can curl up and cause the disc to jam in the unit.

CONTINUED

CD Player

To Load a Disc
Insert a disc about halfway into the disc slot. The drive will pull the disc in the rest of the way to play it. You operate the disc player with the same controls used for the radio. The number of the current track is shown in the display. When playing a disc in MP3 or WMA, the numbers of the current folder and file are shown. The system will continuously play a disc until you change modes.

For information on how to handle and protect compact discs, see page 198.

Text Data Display Function
Each time you press the DISP button, the display shows you the text data on a disc, if the disc was recorded with text data.

You can see the album, artist, and track name in the display. If a disc is recorded in MP3 or WMA, you can see the folder and file name, and the artist, album, and track tag.

When you press and release the DISP button while a disc without text data is playing, you will see “NO INFO” on the display.

The display shows up to about 16 characters of selected text data (the folder name, file name, etc.). If the text data has more than 17 characters, you will see the first 15 characters and the ▶ indicator in the display. Press and hold the DISP button until the next 16 characters are shown. You can see up to 31 characters of the text data.

If you press and hold the DISP button again, the display shows the first 15 characters again.

If any letter is not available, it is replaced with “ . ” (dot) in the display. When the disc has no text data, you will see “NO INFO” on the display.

You will also see some text data under these conditions:

- When a new folder, file, or track is selected.
- When you change the audio mode to play a disc with text data or in MP3 or WMA.
- When you insert a disc, and the system begins to play.

When playing a CD-DA with text data, the album and track name are shown in the display. With a disc in MP3 or WMA, the display shows the folder and file name.

To Change or Select Tracks/Files

You can use the SEEK/SKIP bar while a disc is playing to select passages and change tracks (files in MP3/WMA mode).

SKIP — Each time you press and release the ►►| side of the SEEK/SKIP bar, the player skips forward to the beginning of the next track (file in MP3 or WMA mode). Press and release the |◄◄ side, to skip backward to the beginning of the current track. Press it again to skip to the beginning of the previous track.

To move rapidly within a track, press and hold the ►►| or |◄◄ side of the SEEK/SKIP bar.

In MP3 or WMA mode

FOLDER SELECTION — To select a different folder, press either side of the TUNE/FOLDER bar. Press the ►► side of the bar to skip to the next folder, and the ◄◄ side of the bar to skip to the beginning of the previous folder.

CONTINUED

CD Player

REPEAT (TRACK/FILE REPEAT) — To continuously replay a track (files in MP3 or WMA mode), press and release the RPT button. You will see “RPT” in the display. Press and hold the RPT button for 2 seconds to turn it off.

In MP3 or WMA mode
FOLDER-REPEAT — This feature, when activated, replays all files on the selected folder in the order they are compressed. To activate folder repeat, press the RPT button twice. You will see “ RPT” in the display. The system continuously replays the current folder. Press the RPT button again to turn it off. Pressing the RDM button, or selecting a different folder with the TUNE/FOLDER bar also turns off the repeat feature.

Each time you press and release the RPT button, the mode changes from file repeat to folder repeat, then to normal play.

RANDOM (Random within a disc) — This feature plays the tracks within a disc (the files in MP3 or WMA mode) in random order. To activate random play, press and release the RDM button. In MP3 or WMA mode, press the RDM button repeatedly to select RDM (within a disc random play). You will see “RDM” in the display. Press the RDM button for 2 seconds to return to normal play.

In MP3 or WMA mode
FOLDER-RANDOM — This feature, when activated, plays all files on the selected folder in random order. To activate folder random, press the RDM button. You will see " RDM" in the display. The system will then select and play files randomly. This continues until you deactivate folder random by pressing and holding the RDM button again, or by selecting a different folder with the FOLDER bar.

Each time you press and release the RDM button, the mode changes from folder random play to random play (within a disc random play), then to normal play.

SCAN (TRACK/FILE SCAN) — The scan function samples all tracks (files in MP3 or WMA) on the disc in the order they are recorded on the disc. To activate scan, press and release the SCAN button. You will see SCAN in the display. You will get a 10 second sampling of each track/file on the disc. Press and hold the SCAN button until you hear a beep to get out of scan mode and play the last track/file sampled.

Pressing either side of the SEEK/SKIP bar also turns off the scan feature.

In MP3 or WMA mode
FOLDER SCAN — This feature, when activated, samples the first file of each folder on the disc. To activate folder scan, press the SCAN button twice. You will see " SCAN" in the display.

The system plays the first file in the first folder for about 10 seconds. If you do nothing, the system will then play the first files in the next folders for 10 seconds. After playing the first file in the last folder, the system plays normally.

Pressing either side of the SEEK/SKIP bar, selecting a different folder with the TUNE/FOLDER bar, or pressing the SCAN button, also turns off the folder scan.

Each time you press and release the SCAN button, the mode changes from file scan to folder scan, then to normal play.

CD Player

To Stop Playing a Disc
Press the eject button (⏏) to remove the disc. If you eject the disc, but do not remove it from the slot, the system will automatically reload the disc after 10 seconds. To begin playing, press the CD button.

You can also eject the disc when the ignition switch is off.

To play the radio when a disc is playing, press the AM/FM button. Press the CD button again to switch back to the CD player.

If you turn the system off while a disc is playing, either with the PWR button or by turning off the ignition switch, the disc will stay in the drive. When you turn the system back on, the disc will begin playing where it left off.

Operating the Optional CD Changer
An optional six disc CD changer is available for your vehicle from your dealer.

This disc changer uses the same controls used for the in-dash CD player/changer and the radio.

Load the desired CDs into the magazine, and load the magazine into the changer according to the instructions that came with the unit.

To select the CD changer, press the AUX button. The disc and track numbers will be displayed. To select a different disc, use the preset 5 (DISC −) side for a previous disc or the preset 6 (DISC +) side to select the next disc in sequence.

If you select an empty slot in the magazine, the changer will search for the next available CD to load and play.

Protecting Discs
For information on how to handle and protect compact discs, see page 198.

CD Changer (Models without navigation system)

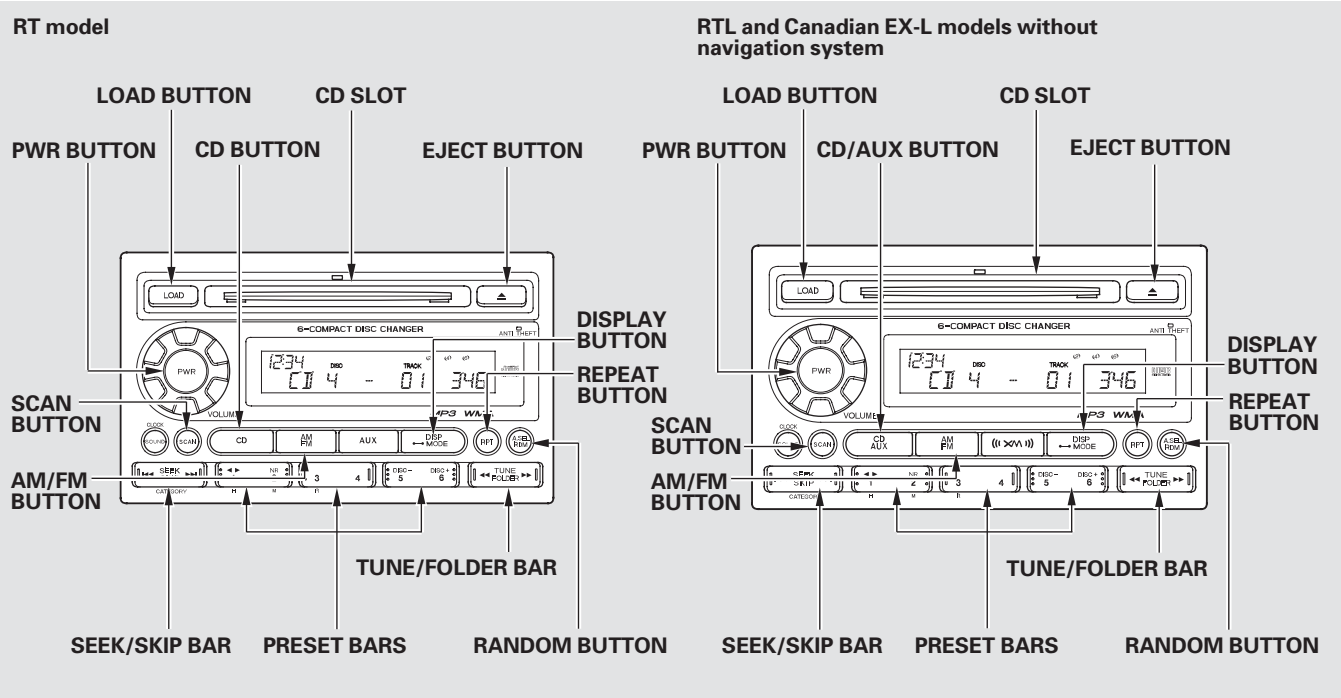

CONTINUED

CD Changer (Models without navigation system)

On RTS, RTL, and Canadian EX-L models without navigation system

To Play a Disc

To load or play discs, the ignition switch must be in the ACCESSORY (I) or ON (II) position.

You operate the disc changer with the same controls used for the radio. To select the disc changer, press the CD or CD/AUX button. You will see "CD" in the display. The disc and track numbers, and the elapsed time are shown in the display. You can also select the displayed information with the DISP button (see page 183). The system will continuously play a disc until you change modes.

NOTICE

Do not use discs with adhesive labels. The label can curl up and cause the disc to jam in the unit.

Loading Discs

Your vehicle's in-dash disc changer holds up to six discs.

1. Press and hold the LOAD button until you hear a beep and see "LOAD" in the display, then release the button.

   To load only one CD, press and release the LOAD button.

2. On the upper right side of the display, the disc number for an empty position will begin blinking, and the green CD load indicator will come on.

3. Insert a CD into the CD slot. Insert it only about halfway; the drive will pull it in the rest of the way. You will see "BUSY" in the display. The CD load indicator turns red and blinks as the CD is loaded.

   You cannot load and play 3-inch (8-cm) discs in this system.

4. When "LOAD" appears again on the display, insert the next CD into the CD slot.

   Do not try to insert a disc until "LOAD" appears. You could damage the audio unit.

5. Repeat this until all six positions are loaded. The system will then begin playing the last CD loaded.

If you are not loading CDs into all six positions, press the LOAD button again after the last CD has loaded. The system will begin playing the last CD loaded.

If you stop loading CDs before all six positions are filled, the system will wait for 10 seconds, then stop the load operation and begin playing the last CD loaded.

Text Data Display Function

Each time you press the DISP button, the display shows you the text data on a disc, if the disc was recorded with text data.

You can see the album, artist, and track name in the display. If a disc is recorded in MP3 or WMA, you can see the folder and file name, and the album, artist, and track tag.

With the folder name, you will see the FOLDER indicator in the display. The TRACK indicator is shown with the file or track name.

When you press and release the DISP button while a disc without text data is playing, you will see “NO INFO” on the display.

The display shows up to 16 characters of selected text data (the folder name, file name, etc.).

If the text data has more than 17 characters, you will see the first 15 characters and the ▶ indicator in the display. Press and hold the DISP button until the next 16 characters are shown. You can see up to 31 characters of the text data.

If you press and hold the DISP button again, the display shows the first 15 characters again.

If any letter is not available, it is replaced with “ . ” (dot) in the display. When the disc has no text data, you will see “NO INFO” on the display.

You will also see some text data under these conditions:

- When a new folder, file, or track is selected.

CONTINUED

CD Changer (Models without navigation system)

- When you change the audio mode to play a disc with text data or in MP3 or WMA.
- When you insert a disc, and the system begins to play.

When playing a CD-DA with text data, the album and track name are shown in the display. With a disc in MP3 or WMA, the display shows the folder and file name.

When you turn on the audio system next time, the system keeps your selection with the DISP button.

To Change or Select Tracks/Files
Use the SEEK/SKIP bar while a disc is playing to select passages and change tracks (files in MP3 or WMA mode).

In MP3 or WMA mode, use the TUNE/FOLDER bar to select folders in the disc and use either side of the SEEK/SKIP bar to change files.

To select a different disc, use the appropriate preset buttons (1 through 6). If you select an empty position, the system will go into the loading sequence (see page 182).

SKIP — Each time you press and release the ►►I side of the SEEK/SKIP bar, the player skips forward to the beginning of the next track (file in MP3 or WMA mode). Press and release the I◄◄ side, to skip backward to the beginning of the current track. Press it again to skip to the beginning of the previous track.

To move rapidly within a track or file, press and hold either side (I◄◄ or ►►I) of the SEEK/SKIP bar.

In MP3 or WMA mode
FOLDER SELECTION — To select a different folder, press either side of the TUNE/FOLDER bar. Press the ▶▶ side of the bar to skip to the next folder, and the ◀◀ side of the bar to skip to the beginning of the previous folder.

REPEAT (TRACK/FILE REPEAT) — To continuously replay a track (files in MP3 or WMA mode), press and release the RPT button. You will see "RPT" in the display. Press and hold the RPT button for 2 seconds to turn it off.

In MP3 or WMA mode
FOLDER REPEAT — This feature, when activated, replays all the files on the selected folder in the order they are compressed in MP3 or WMA. To activate folder repeat mode, press and release the RPT button repeatedly until you see " RPT" in the display. The system continuously replays the current folder. Press and hold the RPT button to turn it off. Pressing the RDM button, or selecting a different folder with the TUNE/FOLDER bar also turns off the repeat feature.

DISC REPEAT — This feature continuously replays the current disc. To activate disc repeat, press and release the RPT button repeatedly until you see " RPT" in the display. Press and hold the RPT button again to turn it off.

Each time you press and release the RPT button, the mode changes from file repeat to folder repeat, to disc repeat then to normal playing.

CONTINUED

CD Changer (Models without navigation system)

RANDOM (Random within a disc) — This feature plays the tracks within a disc (the files in MP3 or WMA mode) in random order. To activate random play, press and release the RDM button. In MP3 or WMA mode, press the RDM button repeatedly to select RDM (within a disc random play). You will see "RDM" in the display. Press the RDM button for 2 seconds to return to normal play.

In MP3 or WMA mode
FOLDER RANDOM — This feature, when activated, plays the files within a current folder in random order, rather than in the order they are compressed in MP3 or WMA. To activate folder random play, press and release the RDM button repeatedly. You will see " RDM" in the display. The system will then select and play files randomly. This continues until you deactivate folder random play by pressing and holding the RDM button again, or you select a different folder with the TUNE/FOLDER bar.

Each time you press and release the RDM button, the mode changes from folder random play, to within a disc random play, then to normal play.

SCAN — The SCAN function samples all the tracks on the disc in the order they are recorded on the disc (all files in the selected folder in MP3 or WMA mode). To activate the scan feature, press and release the SCAN button. You will see "SCAN" in the display. You will get a 10 second sampling of each track/file in the disc/folder. Press and hold the SCAN button to get out of scan mode and play the last track sampled.

In MP3 or WMA mode
FOLDER SCAN — This feature, when activated, samples the first file in each folder on the disc in the order they are recorded. To activate the folder scan feature, press and release the SCAN button repeatedly. You will see " SCAN" in the display. The system will then play the first file in the main folders for about 10 seconds. If you do nothing, the system will then play the following first files for 10 seconds each. When it plays a file that you want to continue listening to, press and hold the SCAN button.

Pressing either side of the SEEK/ SKIP bar, or selecting a different disc (using the preset buttons) or folder (using the TUNE/FOLDER bar) turns off the SCAN or F-SCAN feature.

DISC SCAN — This feature, when activated, samples the first track in each disc in order (the first file in the main folder on each disc in MP3 or WMA mode). To activate the disc scan feature, press and release the SCAN button repeatedly until " SCAN" shows in the display. The system will then play the first track/file in the first main folder in the first disc for about 10 seconds. If you do nothing, the system will then play the following first tracks/files for 10 seconds each. When it plays a track/file that you want to continue listening to, press and hold the SCAN button again.

When the first track in the last disc, or the first file in the last main folder in the last disc begins to play, the disc scan mode will be canceled. Pressing either side of the SEEK/ SKIP bar or selecting a different folder with the TUNE/FOLDER bar also turns off the scan feature.

Each time you press and release the SCAN button, the mode changes from scan, disc scan, then to normal play.

In MP3 or WMA mode
Each time you press and release the SCAN button, the mode changes from file scan, folder scan, disc scan, then to normal play.

CD Changer (Models without navigation system)

To Stop Playing a Disc
Press the eject button (⏏) to remove the disc. If you eject the disc, but do not remove it from the slot, the system will automatically reload the disc after 10 seconds. To begin playing, press the CD or CD/AUX button.

You can also eject the disc when the ignition switch is off.

To play the radio when a disc is playing, press the AM/FM or XM (if equipped) button. Press the CD (CD/AUX on models with XM satellite radio) button again to switch back to the CD changer.

If you turn the system off while a disc is playing, either with the PWR button or by turning off the ignition switch, the disc will stay in the drive. When you turn the system back on, the disc will begin playing where it left off.

Removing Discs from the In-dash Disc Changer
To remove the disc currently in play, press the eject button (⏏). When a disc is removed from a slot, the system automatically begins the load sequence so you can load another disc in that position. If you do not remove the disc from the changer within 10 seconds, the disc will reload into the slot. Then the system returns to the previous mode [AM, FM, or XM (if equipped)].

To remove a different disc from the changer, first select it with the appropriate preset bar. When that disc begins playing, press the eject button. Continue pressing the eject button to remove all the discs from the changer.

You can also eject discs when the ignition switch is on or off:

To eject one disc, press and release the eject button.

To eject all discs, press and hold the eject button until the LOAD indicator begins to blink.

Protecting Discs
For information on how to handle and protect compact discs, see page 198.

CD Changer (Models with navigation system)

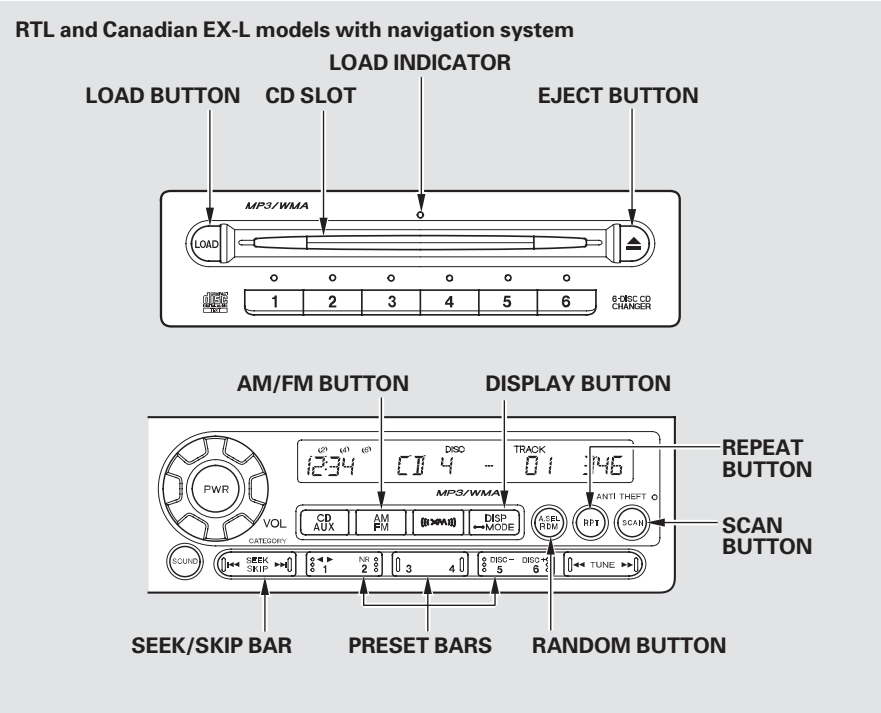

On RTL and Canadian EX-L models with navigation system

To Play a Disc

Your audio system has an in-dash CD changer that holds up to six CDs, providing several hours of continuous entertainment. You operate this CD changer with the same controls used for the radio.

To load CDs or operate the CD changer, the ignition switch must be in the ACCESSORY (I) or ON (II) position.

NOTICE

Do not use CDs with adhesive labels. The label can curl up and cause the CD to jam in the unit.

CONTINUED

CD Changer (Models with navigation system)

The CD changer is behind the navigation system screen. To use the CD changer, press the OPEN button beside the screen. The screen folds back, and the CD changer appears.

Be careful not to injure your fingers when opening or closing the navigation system screen.

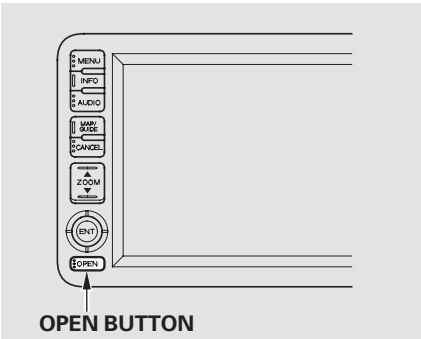

To return the screen to the upright position, press the OPEN button again. Do not use the folded screen as a tray. If you put a cup, for example, on the screen, the liquid inside the cup may spill on the screen when you go over a bump.

Loading Discs

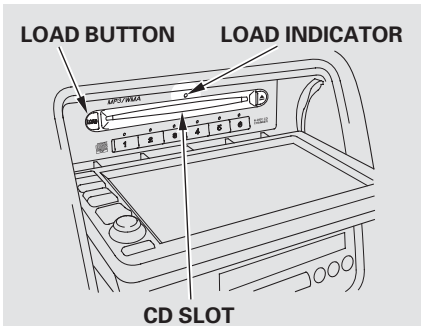

1. Press and hold the LOAD button next to the CD slot until the load indicator above the slot turns from amber to green.

   To load only one CD, press and release the LOAD button.

2. The indicators above the disc buttons of the empty positions will blink, and the green load indicator above the CD slot comes on.

3. Insert a CD into the CD slot. Insert it only about halfway; the drive will pull it in the rest of the way. You will see “BUSY” in the display. The CD load indicator turns amber and blinks as the CD is loaded.

   You cannot load and play 3-inch (8-cm) discs in this system.

4. When “LOAD” appears again on the display, insert the next CD into the CD slot.

   Do not try to insert a disc until “LOAD” appears. You could damage the audio unit.

5. Repeat this until all six positions are loaded. The system will then begin playing the first CD loaded.

If you stop loading CDs before all six positions are filled, the system will wait for 10 seconds, then stop the load operation and begin playing the last CD loaded.

If you press the LOAD button while a CD is playing, the system will stop playing that CD and start the loading sequence. It will then play the CD just loaded.

You can also load a CD into an empty position while a CD is playing by pressing the appropriate disc button. Select an empty disc button (the indicator above the button is off), and press the button. The system will stop playing the current CD and start the loading sequence. It will then play the CD just loaded.

Text Data Display Function

Each time you press the DISP button, the display shows you the text data on a disc, if the disc was recorded with text data.

You can see the album, artist, and track name in the display. If a disc is recorded in MP3 or WMA, you can see the folder and file name, and the album, artist, and track tag.

With the folder name, you will see the FOLD indicator in the display. The TRACK indicator is shown with the file or track name.

When you press and release the DISP button while a disc without text data is playing, you will see “NO INFO” on the display.

CONTINUED

CD Changer (Models with navigation system)

The display shows up to 16 characters of selected text data (the folder name, file name, etc.).

If the text data has more than 17 characters, you will see the first 15 characters and the > indicator in the display. Press and hold the DISP button until the next 16 characters are shown. You can see up to 31 characters of the text data.

If you press and hold the DISP button again, the display shows the first 15 characters again.

If any letter is not available, it is replaced with " . " (dot) in the display. When the disc has no text data, you will see "NO INFO" on the display.

You will also see some text data under these conditions:

- When a new folder, file, or track is selected.
- When you change the audio mode to play a disc with text data or in MP3 or WMA.
- When you insert a disc, and the system begins to play.

When playing a CD-DA with text data, the album and track name are shown in the display. With a disc in MP3 or WMA, the display shows the folder and file name.

When you turn on the audio system next time, the system keeps your selection with the DISP button.

To Change or Select Tracks/Files

You can use the SEEK/SKIP bar while a disc is playing to select passages and change tracks (files in MP3/WMA mode).

SKIP — Each time you press and release the ►►I side of the SEEK/SKIP bar, the player skips forward to the beginning of the next track (file in MP3 or WMA mode). Press and release the I◄◄ side, to skip backward to the beginning of the current track. Press it again to skip to the beginning of the previous track.

To move rapidly within a track, press and hold the ►►I or I◄◄ SKIP bar.

In MP3 or WMA mode
FOLDER SELECTION — To select a different folder, press either side of the TUNE bar. Press the ►► side to skip to the next folder, and press the ◄◄ side to skip to the beginning of the previous folder.

REPEAT (TRACK/FILE REPEAT) — To continuously replay a track (file in MP3 or WMA mode), press and release the RPT button or touch the TRACK REPEAT icon on the screen. You will see "RPT" in the display. Press and hold the RPT button, or touch the TRACK REPEAT icon again to turn it off.

In MP3 or WMA mode
FOLDER REPEAT — This feature, when activated, replays all the files on the selected folder in the order they are compressed in MP3 or WMA. To activate folder repeat mode, press and release the RPT button repeatedly until you see "F-RPT" in the display. The system continuously replays the current folder. Press and hold the RPT button to turn it off. Pressing the RDM button, or selecting a different folder with the TUNE bar also turns off the repeat feature.

DISC REPEAT — This feature continuously replays the current disc. To activate disc repeat, press and release the RPT button repeatedly until you see "D-RPT" in the display, or touch the DISC REPEAT icon on the screen. Press and hold the RPT button, or touch the DISC REPEAT icon again to turn it off.

Each time you press and release the RPT button, the mode changes from file repeat to folder repeat, to disc repeat then to normal playing.

RANDOM (Random within a disc) — This feature plays the tracks within a disc (the files in MP3 or WMA mode) in random order. To activate random play, press and release the RDM button or touch the TRACK RANDOM icon on the screen. In MP3 or WMA mode, press the RDM button repeatedly to select RDM (within a disc random play). You will see "RDM" in the display. Press the RDM button or touch the TRACK RANDOM icon to return to normal play.

CONTINUED

CD Changer (Models with navigation system)

In MP3 or WMA mode
FOLDER RANDOM — This feature, when activated, plays the files within a current folder in random order, rather than in the order they are compressed in MP3 or WMA. To activate folder random play, press and release the RDM button repeatedly. You will see "F-RDM" in the display. The system will then select and play files randomly. This continues until you deactivate folder random play by pressing and holding the RDM button again, or you select a different folder with the TUNE bar.

Each time you press and release the RDM button, the mode changes from folder random play, to within a disc random play, then to normal play.

SCAN — The SCAN function samples all the tracks on the disc in the order they are recorded on the disc (all files in the selected folder in MP3 or WMA mode). To activate the scan feature, press and release the SCAN button or touch the TRACK SCAN icon on the screen. You will see "SCAN" in the display. You will get a 10 second sampling of each track/file in the disc/folder. Press and hold the SCAN button or touch the TRACK SCAN icon again to get out of scan mode and play the last track sampled.

In MP3 or WMA mode
F-SCAN — This feature, when activated, samples the first file in each folder on the disc in the order they are recorded. To activate the folder scan feature, press and release the SCAN button repeatedly. You will see "F-SCAN" in the display. The system will then play the first file in the main folders for about 10 seconds. If you do nothing, the system will then play the first file in each folder for 10 seconds. When it plays a file that you want to continue listening to, press and hold the SCAN button.

Pressing either side of the SEEK/SKIP bar, or selecting a different disc (using the preset buttons) or folder (using the TUNE bar) turns off the SCAN or F-SCAN feature.

D-SCAN — This feature, when activated, samples the first track in each disc in order (the first file in the main folder on each disc in MP3 or WMA mode). To activate the disc scan feature, press and release the SCAN button repeatedly until "D-SCAN" shows in the display, or touch the DISC SCAN icon on the screen. The system will then play the first track/file in the first main folder in the first disc for about 10 seconds. If you do nothing, the system will then play the following first track/file for 10 seconds each. When it plays a track/file that you want to continue listening to, press and hold the SCAN button or touch the DISC SCAN icon again.

When the first track in the last disc, or the first file in the last main folder in the last disc begins to play, the disc scan mode will be canceled. Pressing either side of the SEEK/ SKIP bar or selecting a different folder with the TUNE bar also turns off the scan feature.

Each time you press and release the SCAN button, the mode changes from scan, disc scan, then to normal play.

In MP3 or WMA mode
Each time you press and release the SCAN button, the mode changes from file scan, folder scan, disc scan, then to normal play.

Using a Track List

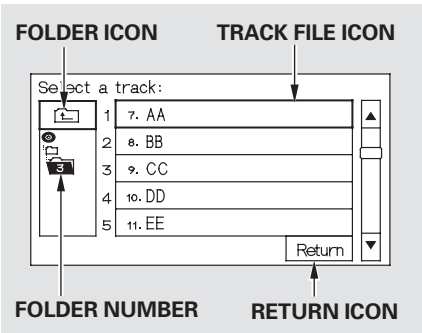

You can also select a track/file directly from a track list on the audio display. Touch the TRACK LIST icon. The track list menu appears on the audio display.

When playing a CD recorded with text data, each track name is shown on the audio display. With a disc recorded in MP3 or WMA, the folder number and the location are also displayed.

CONTINUED

CD Changer (Models with navigation system)

If the disc was not recorded with text data, only the track number is shown.

To scroll through the display, touch the ▲ or ▼ icon on the side of the display. To go back to the previous display, touch the Return icon on the display.

Select the desired track/file by touching the icon on the display. The selected icon will be highlighted in blue. The system begins to play the selected track/file. With a disc in MP3 or WMA, touch the folder icon on the upper left of the screen to move to the parent folder. The current folder is highlighted in blue.

To Stop Playing a Disc
To take the system out of CD mode, press the AM/FM button or XM button. Each time you press the AM/FM button, the system changes to the next mode (AM, FM1, or FM 2). When you return to CD mode by pressing the CD/AUX button, play will continue where it left off.

If you turn the system off while a CD is playing, either with the PWR button or the ignition switch, play will continue at the same point when you turn it back on.

Removing CDs from the In-dash CD Changer
To remove the disc that is currently playing, press the eject button. You will see “EJECT” in the display. When you remove the disc from the slot, the system begins the load sequence so you can load another disc in that position. If you do not load another CD within 10 seconds, the system selects the previous mode (AM, FM1, FM2, or XM Radio).

To remove the disc from the changer, first select it by pressing the appropriate preset bar or corresponding number on the screen. When that disc begins playing, press the eject button.

When you press the eject button while listening to the radio, or with the audio system turned off, the disc that was last selected is ejected. After that disc is ejected, pressing the eject button again will eject the next disc in numerical order. By doing this six times, you can remove all the discs from the changer.

You can also eject discs when the ignition switch is on or off:

To eject one disc, press and release the eject button.

To eject all discs, press and hold the eject button until the LOAD indicator begins to blink.

Protecting Discs
For information on how to handle and protect discs, see page 198 .

Protecting Your CDs

General Information

- When using CD-R or CD-RW discs, use only high quality CDs labeled for audio use.
- When recording a CD-R or CD-RW, the recording must be closed for it to be used by the system.
- Play only standard round CDs. Odd-shaped CDs may jam in the drive or cause other problems.
- Handle your CDs properly to prevent damage and skipping.

Protecting CDs

When a CD is not being played, store it in its case to protect it from dust and other contamination. To prevent warpage, keep CDs out of direct sunlight and extreme heat.

To clean a CD, use a clean soft cloth. Wipe across the CD from the center to the outside edge.

A new CD may be rough on the inner and outer edges. The small plastic pieces causing this roughness can flake off and fall on the recording surface of the CD, causing skipping or other problems. Remove these pieces by rubbing the inner and outer edges with the side of a pencil or pen.

Never try to insert foreign objects in the CD player or the CD changer.

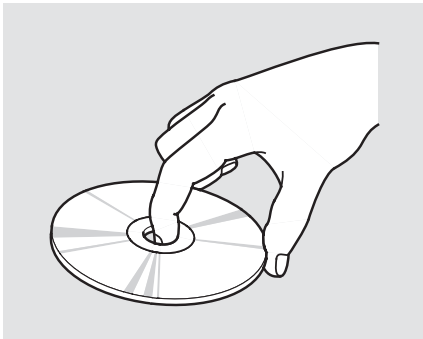

Handle a CD by its edges; never touch either surface. Do not place stabilizer rings or labels on the CD. These, along with contamination from fingerprints, liquids, and felt-tip pens, can cause the CD to not play properly or possibly jam in the drive.

Additional Information on Recommended Discs
The in-dash disc player/changer has a sophisticated and delicate mechanism. If you insert a damaged disc as indicated in this section, it may become stuck inside and damage the audio unit.

Examples of these discs are shown to the right:

1. Bubbled, wrinkled, labeled, and excessively thick discs

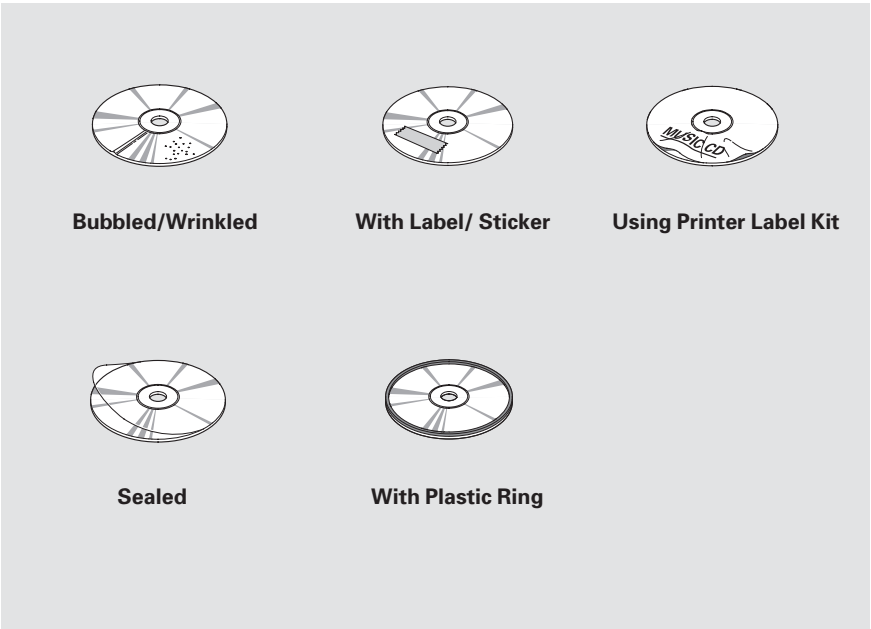

CONTINUED

Protecting Your CDs

2. Damaged discs

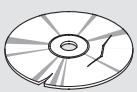

Chipped/
Cracked

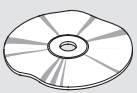

Warped

3. Poor quality discs

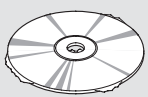

Burrs

4. Small, irregular shaped discs

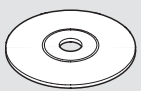

3-inch (8-cm) CD
(Only on models
with CD changer.)

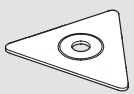

Triangle Shape

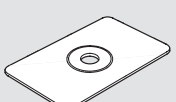

Can Shape

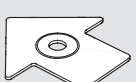

Arrow Shape

5. Discs with scratches, dirty discs

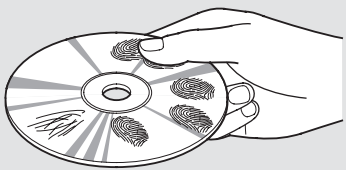

Fingerprints, scratches, etc.

- CD-R or CD-RW may not play due to the recording conditions.
- Scratches and fingerprints on the discs may cause the sound to skip.

- Recommended discs are printed with the following logo.

- Audio unit may not play the following formats.

- This audio unit cannot play a Dual-disc®.

CD Player/Changer Error Messages

The chart on the right explains the error messages you may see in the display while playing a disc.

If you see an error message in the display while playing a disc, press the eject button. After ejecting the disc, check it for damage or deformation. If there is no damage, insert the disc again.
For additional information on damaged discs, see page 199 .

The audio system will try to play the disc. If there is still a problem, the error message will reappear. Press the eject button, and pull out the disc.

Insert a different disc. If the new disc plays, there is a problem with the first disc. If the error message cycle repeats and you cannot clear it, take your vehicle to a dealer.

Error Message	Cause	Solution
HEAT ERROR*1 HOT*2	High Temperature	Will disappear when the temperature returns to normal.
UNSUPPORTED*1 UNSUPPORT*2	Track/File format not supported	Current track will be skipped. The next supported track or file plays automatically.
BAD DISC PLEASE CHECK OWNER'S MANUAL PUSH EJECT MECH ERROR CHANGER ERROR CHK DISC LOAD	Mechanical Error	Press the EJECT button and pull out the disc(s). Check the disc for serious damage, signs of deformation, excessive scratches, and/or dirt (see page 199). Insert the disc again. If the code does not disappear, or the disc(s) cannot be removed, consult your dealer. Do not try to force the disc out the player.
BAD DISC PLEASE CHECK OWNER'S MANUAL	Servo Error	
CHECK DISC*1 DISC ERROR*2	Disc Error	Check the disc for serious damage, signs of deformation, excessive scratches, and/or dirt (see page 199).

*1 : On models without navigation system
*2 : On models with navigation system

On RTS, RTL and Canadian EX-L models

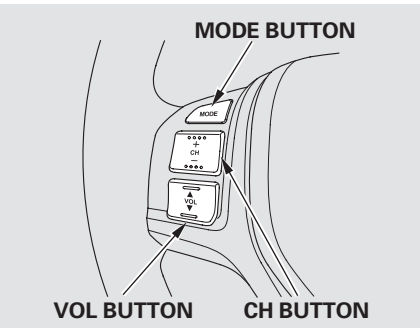

Three controls for the audio system are mounted in the steering wheel hub. These let you control basic functions without removing your hand from the wheel.

The VOL button adjusts the volume up (▲) or down (▼). Press the top or bottom of the button, hold it until the desired volume is reached, then release it.

The MODE button changes the mode. Pressing the button repeatedly selects FM1, FM2, AM, XM1, XM2 (if equipped), CD (if a disc is loaded), or AUX-Audio.

If you are listening to the radio, use the CH button to change stations. Each time you press the top (+) of the button, the system goes to the next preset station on the band you are listening to. Press the bottom (−) to go back to the previous station.

To search up and down from the current frequency and find a station with a strong signal, press the top (+) or bottom (−) of the button for 1 second.

CONTINUED

Remote Audio Controls

If you are playing a disc, the system skips to the beginning of the next track each time you press the top (+) of the CH button. Press the bottom (−) to return to the beginning of the current track. Press it again to return to the previous track. You will see the disc and track numbers in the upper display.

To go to the next disc, press the top (+) of the button for 1 second. Press the bottom (−) for 1 second to go back to the previous disc.

On models without navigation system
When you play an MP3/WMA disc, press the top (+) of the button for 1 second to go to the next folder. Press the bottom (−) for 1 second to go back to the previous folder.

If you are listening to XM Radio, use the CH button to change channels. Each time you press the top (+) of the button, the system goes to the next preset channel. Press the bottom (−) to go back to the previous preset channel.
To go to the next channel of the category you are listening to, press the top (+) of the button for 1 second. Press the bottom (−) for 1 second to go back to the previous channel.

Auxiliary Input Jack

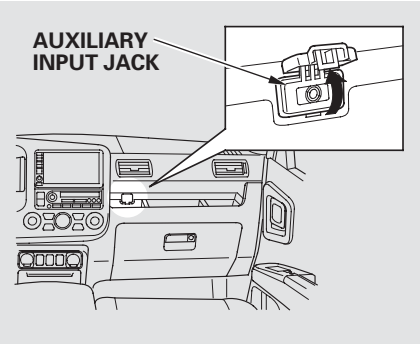

Except RT and Canadian DX models
The auxiliary input jack is on the tray above the glove box. The system will accept auxiliary input from standard audio accessories.

When the appropriate audio unit is connected to the auxiliary input jack, press the CD/AUX or AUX button to select the unit.

Radio Theft Protection

Your vehicle's audio system will disable itself if it is disconnected from electrical power for any reason. To make it work again, you must enter a specific code with the preset bars. Because there are hundreds of number combinations possible from the five digits, making the system work without knowing the exact code is nearly impossible.

You should have received a radio code card that lists your audio system's code and serial numbers. It is best to store this card in a safe place at home. In addition, you should write the audio system's serial number in this owner's manual.

If you lose the card, you must obtain the code number from your dealer. To do this, you will need the audio system's serial number.

If your vehicle's battery is disconnected or goes dead, or the radio fuse is removed, the audio system will disable itself. If this happens, you will see "ENTER CODE" in the frequency display the next time you turn on the system. Use the preset bars to enter the code. The code is located on the radio code card included in your owner's manual kit. When it is entered correctly, the radio will start playing.

If you make a mistake entering the code, do not start over; complete the sequence, then enter the correct code. You have ten tries to enter the correct code. If you are unsuccessful in ten attempts, you must then leave the system on for 1 hour before trying again.

RT, Canadian DX, and VP models

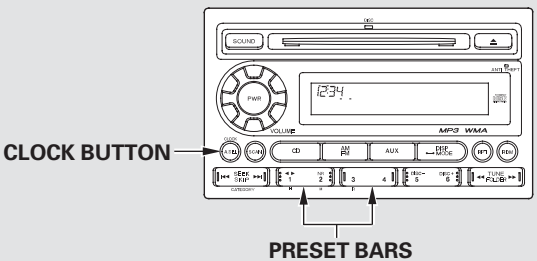

RTS, RTL, and Canadian EX-L models without navigation system

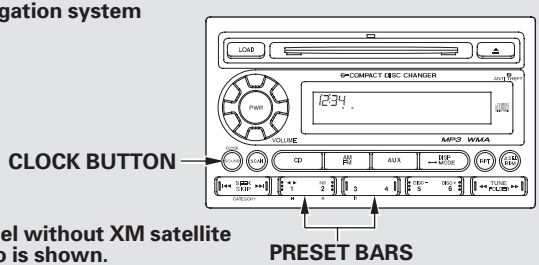

Model without XM satellite radio is shown.

On models without navigation system
If your vehicle's battery is disconnected or goes dead, you may need to set the clock.

To set the time, press the CLOCK button until you hear a beep. The displayed time begins to blink.

Press and hold the H (Preset 1) side of the bar until the hour advances to the desired time. Press and hold the M (Preset 2) side of the bar until the minutes advance to the desired time.

Press the clock set button again to enter the set time.

You can quickly set the time to the nearest hour. If the displayed time is before the half hour, pressing the clock set button until you hear a beep, then pressing the R (Preset 3) side of the bar sets the clock back to the previous hour.
If the displayed time is after the half hour, the clock sets forward to the beginning of the next hour.

For example: 1:06 will reset to 1:00
1:52 will reset to 2:00

On models with navigation system
The navigation system receives signals from the global positioning system (GPS), and the displayed time is updated automatically by the GPS. Refer to the navigation system manual for how to adjust the time.

Security System

If equipped
The security system helps to protect your vehicle and valuables from theft. The horn sounds and a combination of headlights, parking lights, license plate lights, and taillights flash if someone attempts to break into your vehicle or remove the radio. This alarm continues for 2 minutes, then the system resets. To reset an activated system before the 2 minutes have elapsed, unlock the driver's door with the key or the remote transmitter.

The security system automatically sets 15 seconds after you lock the doors, hood, and the In-Bed Trunk. For the system to activate, you must lock the doors from the outside with the key, driver's lock tab, door lock switch, or remote transmitter. The security system indicator on the instrument panel starts blinking immediately to show you the system is setting itself.

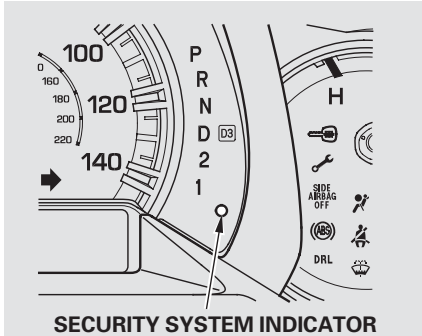

SECURITY SYSTEM INDICATOR

Once the security system is set, opening any door (without using the key or the remote transmitter), the hood, or the In-Bed Trunk, will cause it to alarm. It also alarms if the radio and navigation components are removed from the dashboard or the wiring is cut.

The security system will not set if the hood, In-Bed Trunk, or any door is not fully closed. If the system will not set, check the door and tailgate open monitor and In-Bed Trunk open indicator on the instrument panel (see pages 11 and 75) to see if the doors and In-Bed Trunk are fully closed. Since it is not part of the monitor display, manually check the hood.

NOTE: Use the remote transmitter to quickly check that the hood, In-Bed Trunk, and all doors are closed. Push the lock button twice within 5 seconds. There should be an audible confirmation beep.

Do not attempt to alter this system or add other devices to it.

Cruise Control

Cruise control allows you to maintain a set speed above 25 mph (40 km/h) without keeping your foot on the accelerator pedal. It should be used for cruising on straight, open highways. It is not recommended for city driving, winding roads, slippery roads, heavy rain, or bad weather.

⚠ WARNING

Improper use of the cruise control can lead to a crash.

Use the cruise control only when traveling on open highways in good weather.

Using Cruise Control

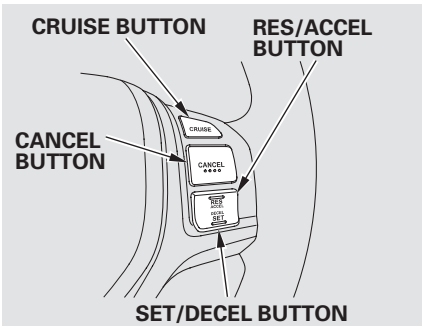

1. Push in the CRUISE button on the steering wheel. The CRUISE MAIN indicator on the instrument panel comes on.

   The cruise control system can be left on, even when it is not in use.

2. Accelerate to the desired cruising speed above 25 mph (40 km/h).

3. Press and release the SET/DECEL button on the steering wheel. The CRUISE CONTROL indicator on the instrument panel comes on to show the system is now activated.

Cruise control may not hold the set speed when you are going up and down hills. If your vehicle speed increases going down a hill, use the brakes to slow down. This will cancel the cruise control. To resume the set speed, press the RES/ACCEL button. The CRUISE CONTROL indicator on the instrument panel will come back on.

Changing the Set Speed

You can increase the set cruising speed in any of these ways:

- Press and hold the RES/ACCEL button. When you reach the desired cruising speed, release the button.
- Push on the accelerator pedal. Accelerate to the desired cruising speed, then press the SET/DECEL button.
- To increase the speed in very small amounts, tap the RES/ACCEL button. Each time you do this, your vehicle will speed up about 1 mph (1.6 km/h).

You can decrease the set cruising speed in any of these ways:

NOTE: If you need to decrease your speed quickly, use the brakes as you normally would.

- Press and hold the SET/DECEL button. Release the button when you reach the desired speed.
- To slow down in very small amounts, tap the SET/DECEL button. Each time you do this, your vehicle will slow down about 1 mph (1.6 km/h).
- Tap the brake pedal lightly with your foot. The CRUISE CONTROL indicator on the instrument panel will go out. When the vehicle slows to the desired speed, press the SET/DECEL button.

CONTINUED

Cruise Control

Even with cruise control turned on, you can still use the accelerator pedal to speed up for passing. After completing the pass, take your foot off the accelerator pedal. The vehicle will return to the set cruising speed.

Resting your foot on the brake pedal causes cruise control to cancel.

Canceling Cruise Control

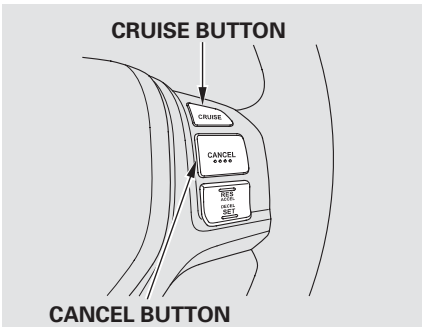

You can cancel cruise control in any of these ways:

- Tap the brake pedal.
- Push the CANCEL button on the steering wheel.
- Push the CRUISE button on the steering wheel.

Resuming the Set Speed

When you push the CANCEL button or tap the brake pedal, the system remembers the previously set speed. To return to that speed, accelerate to above 25 mph (40 km/h), then press and release the RES/ACCEL button. The CRUISE CONTROL indicator comes on. The vehicle accelerates to the same speed as before.

Pressing the CRUISE button turns the system completely off and erases the previous cruising speed.

Compass Function

If equipped

Your vehicle has a compass in the rearview mirror. The compass indicates the vehicle direction with illuminated letters: N (north), S (south), W (west), and E (east). The center blue icon in the compass is always on. It serves as a reference point.

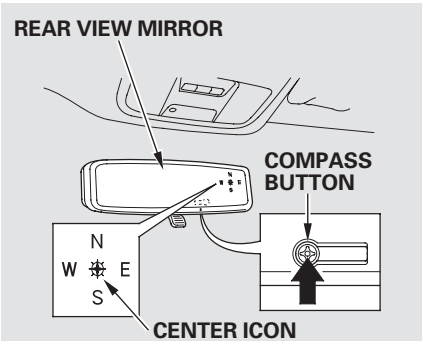

The direction and center position icons come on when you turn the ignition switch to the ON (II) position. The system then begins to check the vehicle direction and illuminates the appropriate icon(s).

To turn the compass on or off, press the compass button on the back of the rearview mirror.

The compass can be affected by driving near power lines or stations, across bridges, through tunnels, over railroad crossings, past large vehicles, or driving near large objects that cause magnetic interference. It can also be affected by accessories such as antennas and roof racks that are mounted by magnets.

CONTINUED

Compass

The compass mirror has a light sensor behind the right side of the rearview mirror. Make sure the extended sun visor or an accessory is not covering the sensor.

Compass Calibration
The compass may need to be manually calibrated after exposure to a strong magnetic field. If the compass seems to continually show the wrong direction, do this.

NOTE: Do this procedure in an open area, away from buildings, power lines, and other vehicles.

1. With the blue center icon displayed, press and hold the compass button for about 6 seconds. When the center icon turns red, release the button.
2. Drive the vehicle slowly in circles at less than 5 mph (8 km/h) until the center icon turns blue. This icon also turns blue by continuing to drive the vehicle under normal driving conditions. When you see an actual heading on the compass, calibration is completed.

Compass Zone Selection
In most areas, there is a variation between magnetic north and true north. Zone selection is required so the compass can compensate for this variation. To check and select the zone, do this:

1. Find the zone for your area on the zone map (see page 216). Each zone number (1 through 15) corresponds to a compass zone on the table (see page 216).
2. Press and hold the compass button for about 3 seconds. When all of the direction icons begin to blink, release the button.
3. The blue direction icon(s) blink and show the current zone.
4. If the zone is incorrect, press and release the compass button repeatedly to get to the correct number.
5. The compass will return to the normal display about 4 seconds after you stop adjusting a zone number.

CONTINUED

Compass

Zone Map

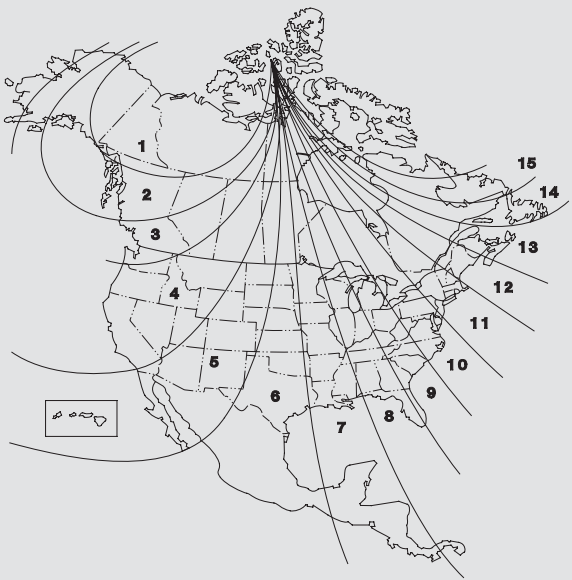

Compass Display for Each Zone

1		○		6		○		11		N	
	○	○	E		W	○	○		○	○	E
		○				S				S	
2		○		7		○		12		N	
	○	○	○		W	○	E		W	○	○
		S				S				○	
3		○		8		N		13		N	
	○	○	E		○	○	○		W	○	E
		S				○				○	
4		○		9		N		14		N	
	W	○	○		○	○	E		W	○	○
		○				○				S	
5		○		10		N		15		N	
	W	○	E		○	○	○		W	○	E
		○				S				S	

HomeLink® Universal Transceiver

If equipped
The HomeLink® Universal Transceiver built into your vehicle can be programmed to operate up to three remote controlled devices around your home, such as garage doors, lighting, or home security systems.

General Information
Before programming your HomeLink to operate a garage door opener, confirm that the opener has an external entrapment protection system, such as an "electronic eye," or other safety and reverse stop features.

If your garage door was manufactured before April 1, 1982, you may not be able to program HomeLink to operate it. These units do not have safety features that cause the motor to stop and reverse it if an obstacle is detected during closing, increasing the risk of injury.

Do not use HomeLink with any garage door opener that lacks safety stop and reverse features.

CONTINUED

HomeLink® Universal Transceiver

Units manufactured between April 1, 1982 and January 1, 1993 may be equipped with safety stop and reverse features. If your unit does not have an external entrapment protection system, an easy test to confirm the function and performance of the safety stop and reverse feature is to lay a 2 × 4 under the closing door. The door should stop and reverse upon contacting the piece of wood.
As an additional safety feature, garage door openers manufactured after January 1, 1993 are required to have external entrapment protection systems, such as an electronic eye, which detect an object obstructing the door.

Important Safety Precautions
Refer to the safety information that came with your garage door opener to test that the safety features are functioning properly. If you do not have this information, contact the manufacturer of the equipment.
Before programming HomeLink to a garage door or gate opener, make sure that people and objects are out of the way of the device to prevent potential injury or damage.
When programming a garage door opener, park just outside the garage.

Training HomeLink
Before you begin — If you just received your vehicle and have not trained any of the buttons in HomeLink before, you should erase any previously learned codes before training the first button. To do this, press and hold the two outside buttons on the HomeLink transceiver for about 20 seconds, until the red indicator flashes. Release the buttons, then proceed to step 1.

If you are training the second or third buttons, go directly to step 1.

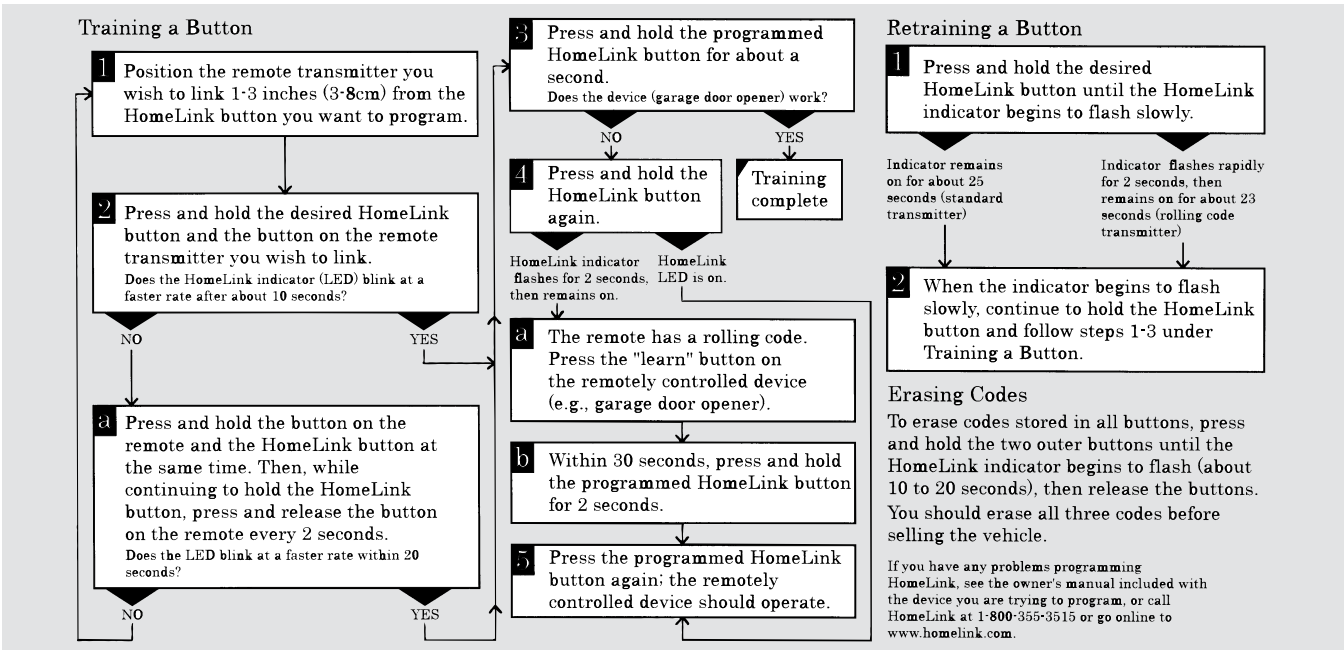

CONTINUED

HomeLink® Universal Transceiver

HomeLink® is a registered trademark of Johnson Controls, Inc.

As required by the FCC:
This device complies with Part 15 of the FCC rules. Operation is subject to the following two conditions: (1) This device may not cause harmful interference, and (2) this device must accept any interference received, including interference that may cause undesired operation.

Changes or modifications not expressly approved by the party responsible for compliance could void the user's authority to operate the equipment.

This device complies with Industry Canada Standard RSS-210.
Operation is subject to the following two conditions: (1) this device may not cause interference, and (2) this device must accept any interference that may cause undesired operation of the device.

On models with navigation system

Bluetooth® HandsFreeLink® (HFL) allows you to place and receive phone calls using voice commands, without handling your cell phone.

To use HFL, you need a Bluetooth-compatible cell phone. For a list of compatible phones, pairing procedures, and special feature capabilities:

In the U.S., visit *handsfreelink.honda.com* or call (888) 528-7876.

In Canada, visit *www.honda.ca,* or call (888) 9-HONDA-9.

Using HFL

HFL Buttons

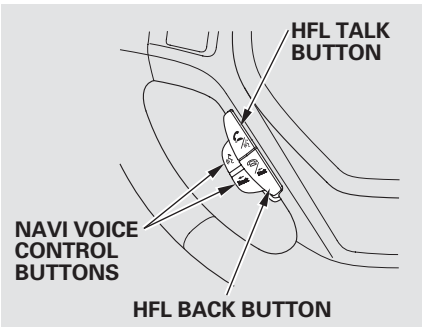

HFL Talk button — Press and release to give a command or answer a call.

HFL Back button — Press and release to end a call, go back to the previous command, or cancel the command.

CONTINUED

Voice Control Tips

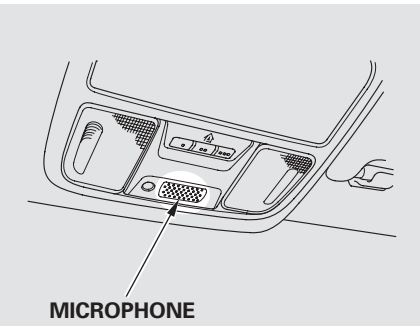

- Air or wind noise from the dashboard and side vents and all windows may interfere with the microphone. Adjust or close them as necessary.

- Press and release the HFL Talk button each time you want to make a command. After the beep, speak in a clear, natural tone.

- Try to reduce all background noise. If the microphone picks up voices other than yours, commands may be misinterpreted.

- Many commands can be spoken together. For example, you can say “Call 123-456-# # # # ” or “Dial Peter.”

- When HFL is in use, navigation voice commands cannot be recognized.

- To change the volume level of HFL, use the audio system volume knob or the steering wheel volume controls.

Help Features

- To hear general HFL information, including help on pairing a phone or setting up the system, say "Tutorial."
- For help at any time, including a list of available commands, say "Hands free help."

Information Display

As an incoming call notification, you will see the following display:

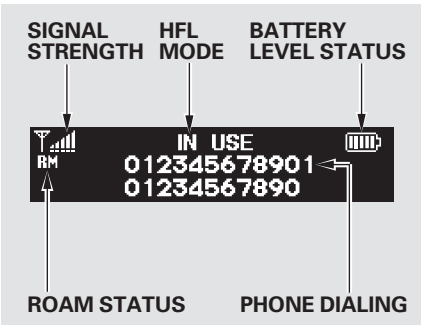

Some phones may send battery, signal strength, and roaming status information to HFL.

CONTINUED

Bluetooth® HandsFreeLink®

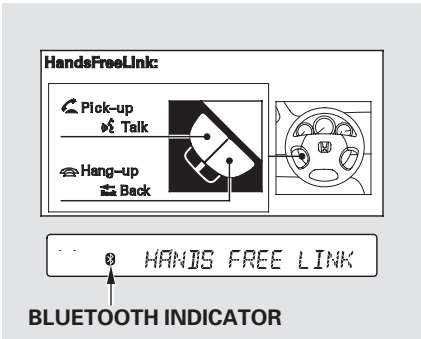

A notification that there is an incoming call, or HFL is in use, will appear on the navigation screen when the audio system is on.

When there is an incoming call, or HFL is in use, “HANDS FREE LINK” will appear on the audio display.

The Bluetooth icon will also appear on the audio display when a phone is linked.

How to Use HFL

The ignition switch must be in the ACCESSORY (I) or ON (II) position.

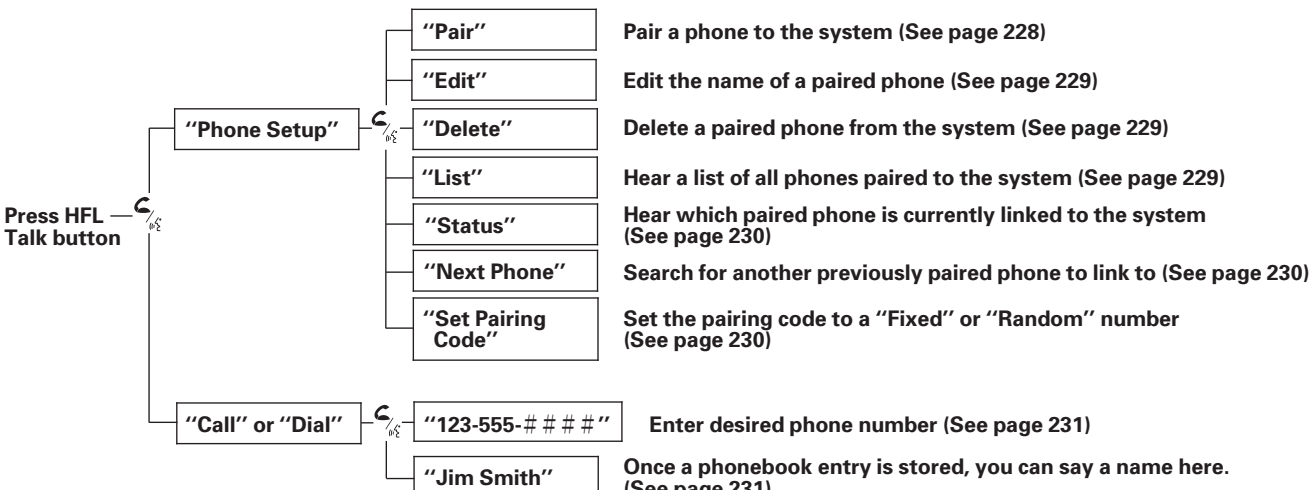

Press and release the HFL Talk button each time you give a command.

CONTINUED

Bluetooth® HandsFreeLink®

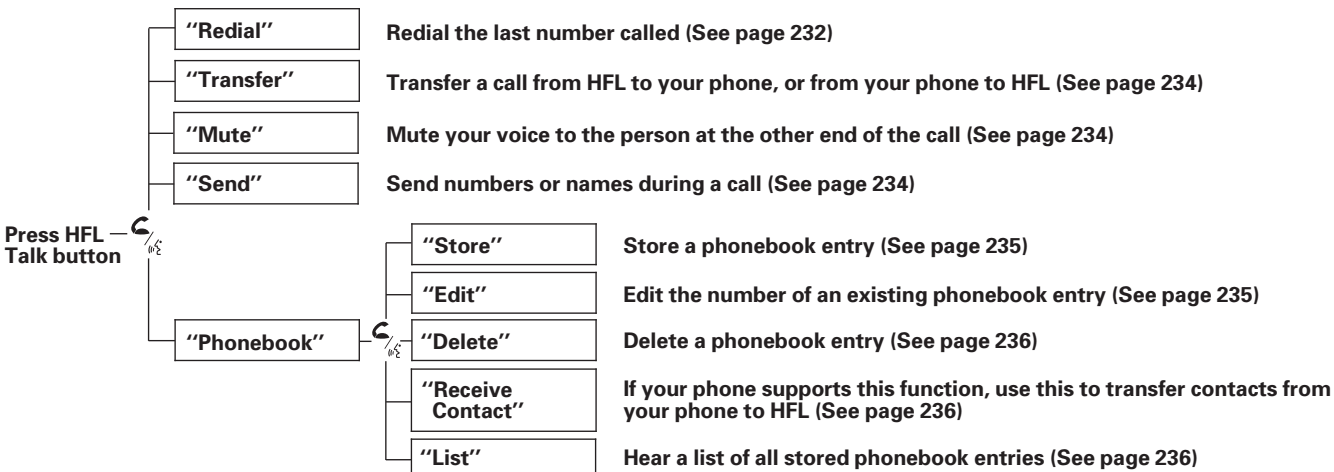

Press and release the HFL Talk button each time you give a command.

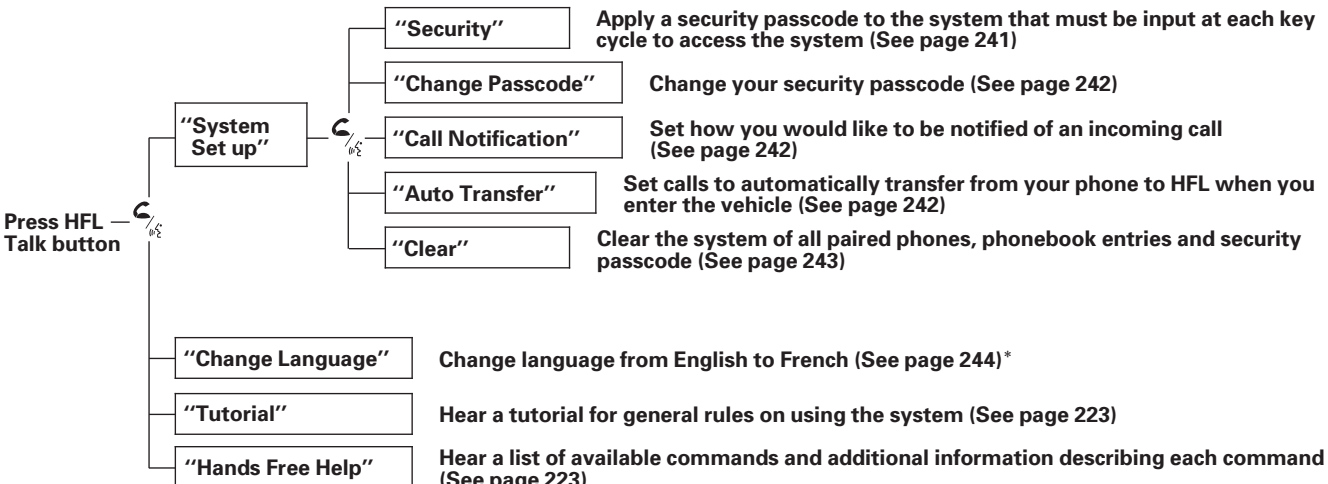

Press and release the HFL Talk button each time you give a command.

* : Canadian models

CONTINUED

Bluetooth® HandsFreeLink®

To use HFL, you need to pair your Bluetooth-compatible cell phone to the system.

Phone Setup
This command group is available for paired cell phones.

Phone pairing tips

- You cannot pair your phone while the vehicle is moving.
- Your phone must be in discovery or search mode to pair. Refer to your phone's manual.
- Up to six phones can be paired.
- Your phone's battery may drain faster when it is paired to HFL.
- If after three minutes your phone is not ready to pair or a phone is not found, the system will time out and return to idle.

To pair a cell phone:

1. Press and release the HFL Talk button. If you are pairing a phone for the first time, HFL will give you information about the pairing process. If it is not the first phone you are pairing, say "**Phone setup**" and say "**Pair**."
2. Follow the HFL prompts and put your phone in discovery or search mode. HFL will give you a 4-digit pairing code and begin searching for your phone.
3. When your phone finds a Bluetooth device, select HFL from the options and enter the 4-digit code from the previous step.
4. Follow the HFL prompts and name the newly paired phone.

To rename a paired phone:
Press and release the HFL Talk button before a command.

1. Say "**Phone setup**."
2. Say "**Edit**" after the prompts.
3. If there is more than one phone paired to the system, HFL will ask you which phone's name you want to change. Follow the HFL prompts and rename the phone.

To delete a paired phone:
Press and release the HFL Talk button before a command.

1. Say "**Phone setup**."
2. Say "**Delete**" after the prompts.
3. HFL will ask you which phone you want to delete. Follow the HFL prompts to continue with the deletion.

To hear the names of all paired phones:
Press and release the HFL Talk button before a command.

1. Say "**Phone setup**."
2. Say "**List**" after the prompts.
3. HFL will read out all the paired phone's names.

CONTINUED

To hear which paired phone is currently linked:
Press and release the HFL Talk button before a command.

1. Say "**Phone setup**."
2. Say "**Status**" after the prompts.
3. HFL will tell you which phone is linked to the system.

To change from the currently linked phone to another paired phone:
Press and release the HFL Talk button before a command.

1. Say "**Phone setup**."
2. Say "**Next phone**" after the prompts.
3. HFL disconnects the linked phone and searches for another paired phone.
4. Once another phone is found, it is linked to the system. HFL will inform you which phone is now linked.

If no other phones are found or paired, HFL will inform you that the original phone is linked again.

To change the pairing code setting:
Press and release the HFL Talk button before a command.

1. Say "**Phone setup**."
2. Say "**Set pairing code**" after the prompts.
3. If you want HFL to create a random code each time you pair a phone, say "**Random**." If you want to choose your own 4-digit code to be used each time, say "**Fixed**" and follow the HFL prompts.

Making a Call
You can make calls using any phone number or a name in the HFL phonebook. You can also redial the last number called.

HFL uses a Class 2 Bluetooth, which means, the maximum range between your phone and vehicle is 30 feet (10 meters).

During a call, HFL allows you to talk up to 30 minutes after you remove the key from the ignition switch. However, this may weaken the vehicle's battery.

To make a call using a phone number:
Press and release the HFL Talk button before a command.

1. Say "**Call**" or "**Dial**."
2. Follow the HFL prompts and say the phone number you want to dial.
3. Follow the HFL prompts to confirm the number and say "**Call**" or "**Dial**."

Once connected, you will hear the person you called through the audio speakers.

To make a call using a name in the HFL phonebook:
Press and release the HFL Talk button before a command.

1. Say "**Call**" or "**Dial**."
2. Follow the HFL prompts and say the name stored in the HFL phonebook that you want to call.
3. Follow the HFL prompts to confirm the name and make the call.

CONTINUED

To redial the last number called by HFL:

Press and release the HFL Talk button and say "**Redial**."

To make a call from an imported phonebook:

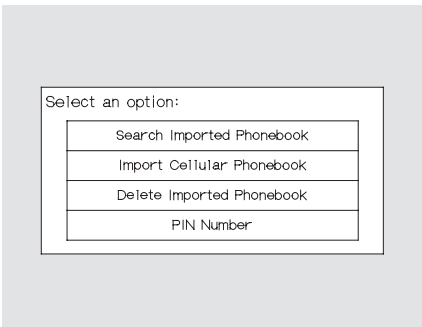

1. Press the INFO button, then select "**Cellular Phonebook**."

2. Select "**Search Imported Phonebook**."

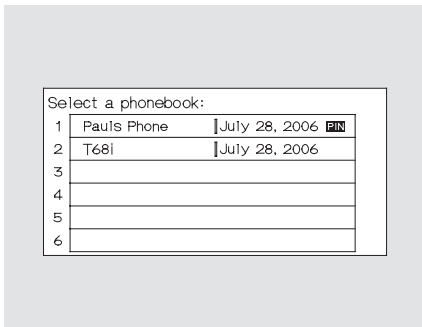

3. Select a phonebook you want to choose a phone number from.

If the phonebook you select is PIN-protected, you will need to enter the PIN to access it. See page 379 for more information.

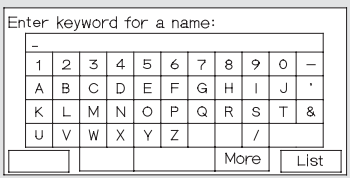

To search for a specific name in the phonebook, enter the keyword for either the first or last name.

To display all names in the phonebook, select the "**List**" option.

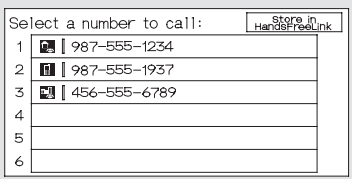

4. Select the name. All the phone numbers stored for that name will be listed.
5. Select the phone number, and HFL begins dialing.

If you choose "**Store in HandsFreeLink**," the phone number will be stored in HFL, so that you can call it using HFL's name tag by voice.

Receiving a Call

When you receive a call, an incoming call notification (if activated) will play and interrupt the audio system if it is on.

Press the HFL Talk button to answer the call, or the HFL Back button to hang up.

Call Waiting

If your phone has Call Waiting, press and release the HFL Talk button to put the original call on hold and answer the incoming call.

To return to the original call, press the HFL Talk button again. If you don't want to answer the incoming call, disregard it and continue with your original call. If you want to hang up the original call and answer the new call, press the HFL Back button.

Transferring a Call
You can transfer a call from HFL to your phone, or from your phone to HFL.

Press and release the HFL Talk button and say "**Transfer**."

Muting a Call
You can mute your voice to the person you are talking to during a call.

To mute your voice during a call, press and release the HFL Talk button and say "**Mute**."

To unmute your voice, press and release the HFL Talk button and say "**Mute**" again.

Send Numbers or Names During a Call
HFL allows you to send numbers or names during a call. This is useful when you call a menu-driven phone system.

To send a name or number during a call:
Press and release the HFL Talk button before a command.

1. Say "**Send**."
2. Follow the HFL prompts and say the name or number you want to send.
3. Follow the HFL prompts to send the tones and continue the call.

NOTE: To send a pound (#), say "pound." To send a star (*), say "star."

Phonebook
You can store up to 50 names with their associated numbers in HFL. The numbers you store cannot only be phone numbers but other types, such as account numbers or passwords, which can be sent during a menu-driven call.

To store a phonebook entry:
Press and release the HFL Talk button before a command.

1. Say "**Phonebook**."
2. Say "**Store**" after the prompts.
3. Say a name you want to list as your phonebook entry.
4. Say the number you want to store for the name entry.
5. Follow the HFL prompts and say "**Enter**" to store the entry.

NOTE:
- Avoid using duplicate name entries.
- Avoid using "home" as a name entry.
- It is easier for HFL to recognize a multisyllabic or longer name. For example, use "Peter" instead of "Pete," or "John Smith" instead of "John."

To edit the number stored in a name:
Press and release the HFL Talk button before a command.

1. Say "**Phonebook**."
2. Say "**Edit**" after the prompts.
3. Follow the HFL prompts and say the name entry you want to edit.
4. When asked, say the new number for that name.
5. Follow the HFL prompts to complete the edit.

CONTINUED

To delete a name:
Press and release the HFL Talk button before a command.

1. Say "**Phonebook**."
2. Say "**Delete**" after the prompts.
3. Say the name you want to delete and follow the HFL prompts to complete the deletion.

To list all names in the phonebook:
Press and release the HFL Talk button before a command.

1. Say "**Phonebook**."
2. Say "**List**" after the prompts.
3. HFL begins reading the names in the order they were stored.
4. If you hear a name you want to call, immediately press the HFL Talk button and say "**Call**."

To store a specific phone number from your cell phone directly to the HFL phonebook (available on some phones):
Press and release the HFL Talk button before a command.

1. Say "**Phonebook**."
2. Say "**Receive contact**" after the prompts.
3. Follow the HFL prompts, select a number from your cell phone, and send it to HFL.
4. Follow the HFL prompts and name the number, or say "**Discard**" if it is not the number you want to store.
5. Follow the HFL prompts if you want to store another number.

Cellular Phonebook
(available on some phones)

If you select **Cellular Phonebook** from the Information screen menu, you will see four HFL options.

For a list of cell phones that are compatible with this feature:

In the U.S., visit *handsfreelink.honda.com* or call (888) 528-7876.

In Canada, visit *www.honda.ca,* or call (888) 9-HONDA-9.

Import Cellular Phonebook:
The entire phonebook data of the cell phone that is linked to HFL can be imported to the navigation system.

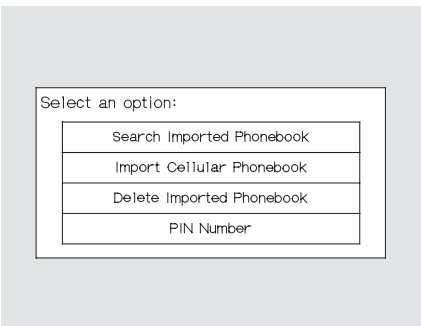

Select "**Import Cellular Phonebook**," and HFL will begin importing the phonebook. Select "**OK**" after the import is completed.

Search Imported Phonebook:
Once a phonebook has been imported, you can search the phone numbers by the person's name.

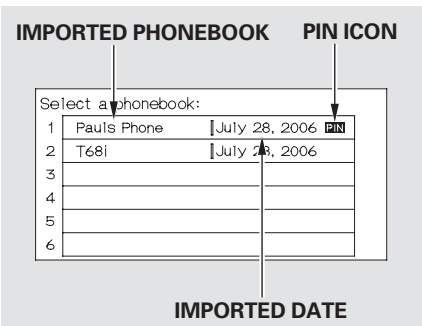

Select "**Search Imported Phonebook**," and a list of imported phonebooks will be displayed.

Select a phonebook from the list.

CONTINUED

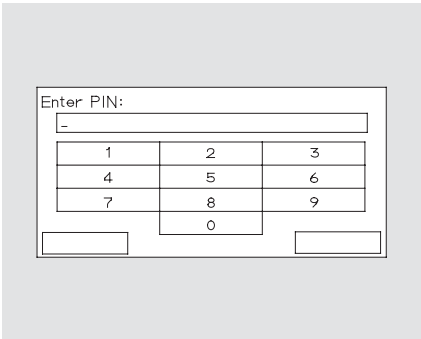

If the phonebook is PIN-protected, you will need to enter the 4-digit PIN.

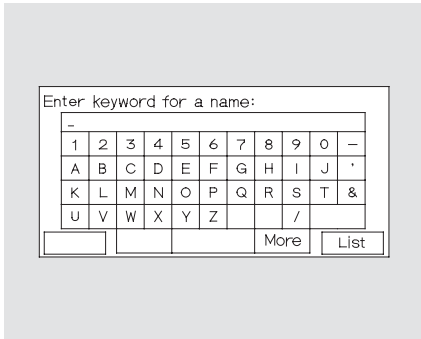

To search for a specific name in the phonebook, enter the keyword for either the first or last name.

To display all names in the phonebook, select the "**List**" option.

Select a person from the list. Up to three category icons are displayed in the left side of the list:

These indicate how many numbers are stored for the name. If a name has more than three category icons, "…" is displayed.

Select the person's number you want to call, and press the HFL Talk button.

Delete Imported Phonebook:
You can delete any imported phonebook.

Select "**Delete Imported Phonebook**," and a list of imported phonebooks will be displayed.

Select a phonebook you want to delete. If the phonebook is PIN-protected, you will need to enter the 4-digit PIN number.

After making a selection, the following screen will appear.

Select "**Yes**," then "**OK**" to complete the deletion.

PIN Number
You can add, change, or remove a PIN number from any phonebook.

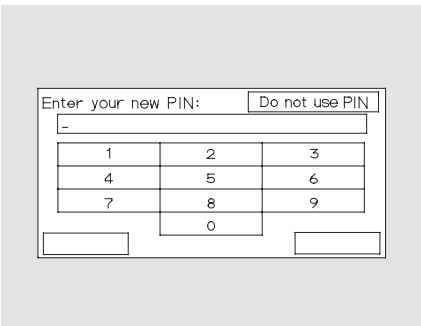

To add a PIN:
If you have selected a phonebook without a PIN, you will see the above display.

Enter the new 4-digit PIN. You will have to re-enter the PIN for confirmation.

CONTINUED

To change the PIN to a new number:

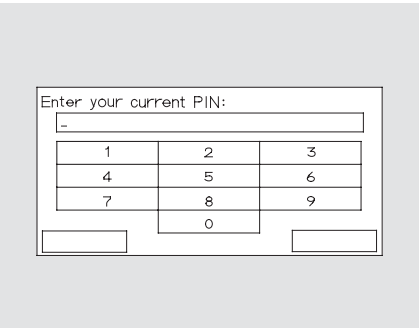

Select the phonebook you want. The display will change as shown above.

Enter the current PIN for this phonebook.

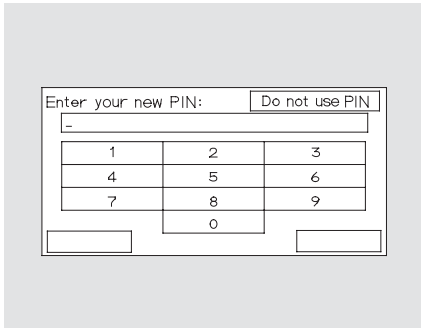

The display will change as shown above.

Enter the new 4-digit PIN number. You will be asked to re-enter the PIN for verification.

To remove a PIN:

Select "**PIN number**," then select "**Do not use PIN**" after you enter the current PIN.

System Setup
This command group allows you to change or customize HFL basic settings.

To set a 4-digit passcode to lock the HFL system for security purposes:
Press and release the HFL Talk button before a command.

1. Say "**System setup**."
2. Say "**Security**"after the prompts.
3. Follow the HFL prompts and say the 4-digit passcode you want to set.
4. Follow the HFL prompts to confirm the number.

NOTE: Once a passcode is set, you will need to enter it to use HFL each time you start the vehicle. If you forget the code, your dealer will have to reset it for you, or you will have to clear the entire system (see page 243).

CONTINUED

To change your security passcode:
Press and release the HFL Talk button before a command.

1. Say "**System setup**."
2. Say "**Change passcode**" after the prompts.
3. Follow the HFL prompts and say the new 4-digit passcode.
4. Follow the HFL prompts to confirm the number.

***To select either a ring tone or a prompt as the incoming call notification**:**
Press and release the HFL Talk button before a command.

1. Say "**System setup**."
2. Say "**Call notification**" after the prompts.
3. Follow the HFL prompts and say "**Ring tone**" or "**Prompt**." You can also say "**Off**" for no audible incoming call notification.

* : The default setting is a ring tone.

To activate or deactivate the auto transfer function:
If you get into the vehicle while you are on the phone, the call can be automatically transferred to HFL with the ignition switch in the ACCESSORY (I) position.

Press and release the HFL Talk button before a command.

1. Say "**System setup**."
2. Say "**Auto transfer**" after the prompts.
3. HFL will let you know if auto transfer is on or off, depending on the previous setting. Follow the HFL prompts to change the setting.

To clear the system:
This operation clears the passcodes, paired phones, all names in the HFL phonebook, and all imported phonebook data.

Press and release the HFL Talk button before a command.

1. Say "**System setup**."

2. Say "**Clear**" after the prompts.

3. Follow the HFL prompts to continue to complete the clearing procedure.

You can also clear the system when you have forgotten the passcode and cannot access HFL. When HFL asks you for the passcode, say "**System clear**." Paired phones, all names in the HFL phonebook and all imported phonebook data will be lost.

Quick Language Selection
Canadian models only
To quickly change the language:
Press and release the HFL Talk button before a command.

1. Say the language you want to change to in that language.

2. Follow the HFL prompts.

Change Language
Canadian models only
To change the system language between English and French:
Press and release the HFL Talk button before a command.

1. Say "**Change language**."

2. Follow the HFL prompts to change the language to English or French.

If you have not named your paired phone in the language you just selected, HFL will ask you to name it in the current language.

When French is your currently selected language, you can give voice commands in French.

***Bluetooth*® Wireless Technology**
The *Bluetooth*® name and logos are registered trademarks owned by Bluetooth SIG, Inc. and any use of such marks by Honda Motor Co., Ltd. is under license. Other trademarks and trade names are those of their respective owners.

As required by the FCC:
This device complies with Part 15 of the FCC rules. Operation is subject to the following two conditions: (1) This device may not cause harmful interference, and (2) this device must accept any interference received, including interference that may cause undesired operation.

Changes or modifications not expressly approved by the party responsible for compliance could void the user's authority to operate the equipment.

This device complies with Industry Canada Standard RSS-210.
Operation is subject to the following two conditions: (1) this device may not cause interference, and (2) this device must accept any interference that may cause undesired operation of the device.

Rearview Camera and Monitor

On models with navigation system

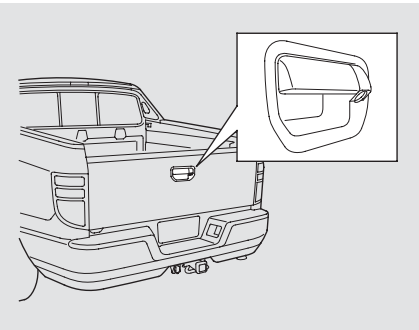

Whenever you shift to reverse (R) with the ignition switch in the ON (II) position, the rearview is shown on the navigation system screen.

For the best picture, always keep the rearview camera clean, and do not cover the camera lens. To avoid scratching the lens when you clean it, use a moist, soft cloth.

Since the rearview camera display area is limited, you should always back up slowly and carefully, and look behind you for obstacles.

Before you begin driving your vehicle, you should know what gasoline to use and how to check the levels of important fluids. You also need to know how to properly store luggage or packages. The information in this section will help you. If you plan to add any accessories to your vehicle, please read the information in this section first.

Break-in Period 248
Fuel Recommendation 248
Service Station Procedures 249
Refueling..... 249
Opening and Closing the Hood 252
Oil Check 253
Engine Coolant Check 253
Fuel Economy 254
Accessories and Modifications 257
Carrying Cargo 259

Break-in Period, Fuel Recommendation

Break-in Period
Help assure your vehicle's future reliability and performance by paying extra attention to how you drive during the first 600 miles (1,000 km). During this period:

- Avoid full-throttle starts and rapid acceleration.
- Avoid hard braking for the first 200 miles (300 km).
- Do not change the oil until the scheduled maintenance time.
- Do not tow a trailer.

You should also follow these recommendations with an overhauled or exchanged engine, or when the brakes are replaced.

Fuel Recommendation
Your vehicle is designed to operate on unleaded gasoline with a pump octane number of 87 or higher. Use of a lower octane gasoline can cause a persistent, heavy metallic rapping noise that can lead to engine damage.

We recommended using a quality gasoline containing detergent additives that help prevent fuel system and engine deposits.
In addition, in order to maintain good performance, fuel economy, and emissions control, we strongly recommend, in areas where it is available, the use of gasoline that does NOT contain manganese-based fuel additives such as MMT.

Use of gasoline with these additives may adversely affect performance, and cause the malfunction indicator lamp on your instrument panel to come on. If this happens, contact your authorized dealer for service.

Some gasoline today is blended with oxygenates such as ethanol or MTBE. Your vehicle is designed to operate on oxygenated gasoline containing up to 10% ethanol by volume and up to 15% MTBE by volume. Do not use gasoline containing methanol.

If you notice any undesirable operating symptoms, try another service station or switch to another brand of gasoline.

Premium fuel is recommended when towing in certain conditions (see page 303).

For further important fuel-related information for your vehicle, or information on gasoline that does not contain MMT, visit Owner Link at *owners.honda.com*. In Canada, visit *www.honda.ca* for additional information on gasoline.

Refueling

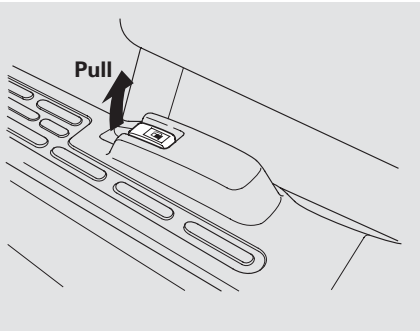

1. Park with the driver's side closest to the service station pump.

2. Open the fuel fill door by pulling on the handle to the left of the driver's seat.

⚠ WARNING

Gasoline is highly flammable and explosive. You can be burned or seriously injured when handling fuel.

- Stop the engine, and keep heat, sparks, and flame away.
- Handle fuel only outdoors.
- Wipe up spills immediately.

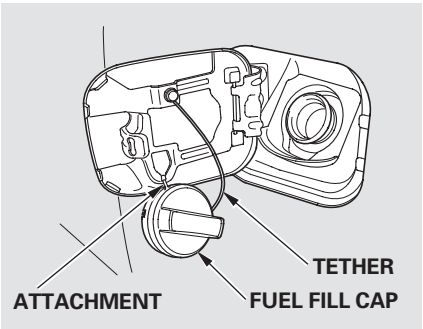

3. Remove the fuel fill cap slowly. You may hear a hissing sound as pressure inside the tank escapes. The fuel fill cap is attached to the fuel filler with a tether. Insert the attachment on the fuel fill cap into the slit on the fuel fill door.

4. Stop filling the tank after the fuel nozzle automatically clicks off. Do not try to "top off" the tank. This leaves some room in the fuel tank for the fuel to expand with temperature changes.

   If the fuel nozzle keeps clicking off even though the tank is not full, there may be a problem with your vehicle's fuel vapor recovery system. The system helps keep fuel vapor from going into the atmosphere. Try filling at another pump. If this does not fix the problem, consult your dealer.

CONTINUED

5. Screw the fuel fill cap back on until it clicks at least once.

   On models without navigation system
   If you do not properly tighten the cap, you will see a "CHECK FUEL CAP" message on the information display (see page 81).

   On models with navigation system
   If you do not properly tighten the cap, you will see a "TIGHTEN FUEL CAP" message on the multi-information display.

6. Push the fuel fill door closed until it latches.

Tighten Fuel Cap Message
On models with navigation system

Your vehicle's on board diagnostic system will detect a loose or missing fuel fill cap as an evaporative system leak. The first time a leak is detected a "TIGHTEN FUEL CAP" message appears on the multi-information display. Turn the engine off, and confirm the fuel fill cap is installed. If it is, loosen it, then retighten it until it clicks at least once. The message should go off after several days of normal driving once you tighten or replace the fuel fill cap. To scroll to another message, press the INFO button. The "TIGHTEN FUEL CAP" message will appear each time you restart the engine until the system turns the message off.

If the system still detects a leak in the vehicle's evaporative emissions system, the malfunction indicator lamp (MIL) comes on. If the fuel fill cap was not already tightened, turn the engine off, and check or retighten the fuel fill cap until it clicks at least once. The MIL should go off after several days of normal driving once the cap is tightened or replaced. If the MIL does not go off, have your vehicle inspected by a dealer. For more information, see page 375 .

Filling a Portable Fuel Container
Whenever filling a fuel container, use an approved fuel container, and place it on the ground. Do not fill the fuel container in the vehicle, including the pickup bed and the In-Bed Trunk. Make sure to put the fuel pump nozzle in the fuel filler of the container securely and to handle it properly.

Gasoline or fuel vapors are extremely flammable and explosive. Improperly handling fuel can cause an explosion in which you can be seriously injured.

Before placing the fuel container in the vehicle, wipe up any spill completely.

Your vehicle has a warning label for filling a portable fuel container on the left rear side of the pickup bed.

⚠ WARNING

Do not fill a portable fuel container in the pickup bed.

Static electricity can ignite gas vapors and you can be burned.

Service Station Procedures

Opening and Closing the Hood

1. Park the vehicle, and set the parking brake. Pull the hood release handle under the lower left corner of the dashboard. The hood will pop up slightly.

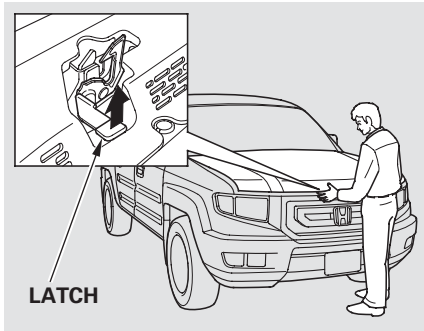

2. Put your fingers under the front edge of the hood. The hood latch handle is above the “H” logo. Pull this handle until it releases the hood, then lift the hood.

   If the hood latch handle moves stiffly, or you can open the hood without lifting the handle, the mechanism should be cleaned and lubricated.

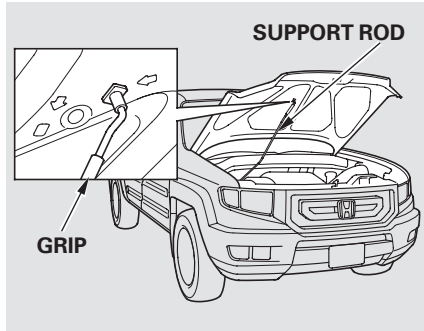

3. Holding the grip, pull the support rod out of its clip. Insert the end into the designated hole in the hood marked by an arrow.

To close the hood, lift it up slightly to remove the support rod from the hole. Put the support rod back into its holding clip. Lower the hood to about a foot (30 cm) above the fender, then let it drop. Make sure it is securely latched.

Oil Check

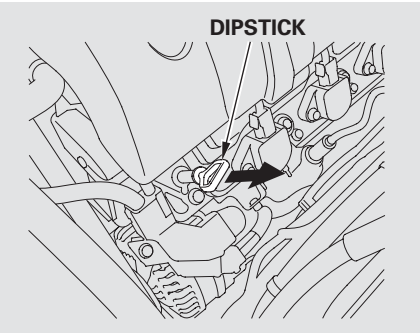

Wait a few minutes after turning the engine off before you check the oil.

1. Remove the dipstick (orange loop).
2. Wipe off the dipstick with a clean cloth or paper towel.
3. Insert the dipstick all the way back into its hole.

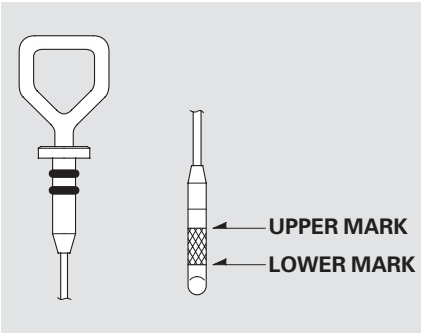

4. Remove the dipstick again, and check the level. It should be between the upper and lower marks.

If it is near or below the lower mark, see **Adding Engine Oil** on page 326 .

Engine Coolant Check

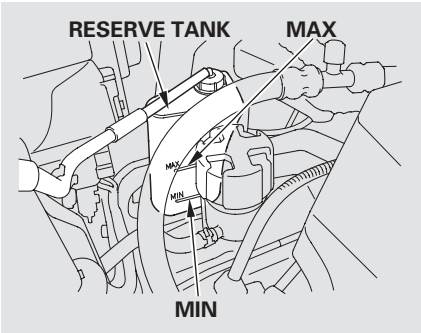

Look at the coolant level in the radiator reserve tank. Make sure it is between the MAX and MIN lines. If it is below the MIN line, see **Adding Engine Coolant** on page 329 for information on adding the proper coolant.

Refer to **Owner's Maintenance Checks** on page 323 for information about checking other items on your vehicle.

Fuel Economy

Actual Mileage and EPA Fuel Economy Estimates Comparison. Fuel economy is not a fixed number. It varies based on driving conditions, driving habits and vehicle condition. Therefore, it is not possible for one set of estimates to predict fuel economy precisely for all drivers in all environments.

The EPA fuel economy estimates shown in the example to the right are a useful tool for comparison when buying a vehicle. EPA estimates include:

City MPG — Represents urban driving in light traffic. A range of miles per gallon achieved is also provided.

Highway MPG — Represents a mixture of rural and interstate driving, in a warmed-up vehicle, typical of longer trips in free-flowing traffic. A range of miles per gallon achieved is also provided.

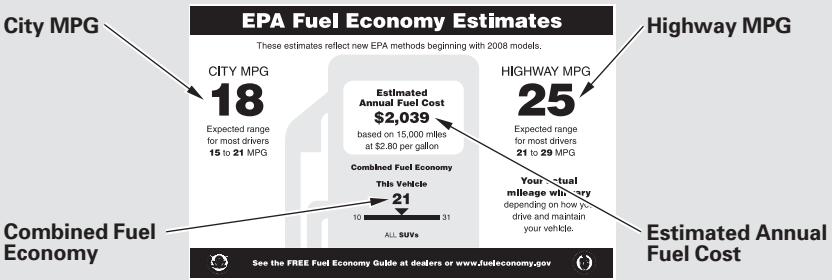

(Sample U.S. EPA label shown)

Combined Fuel Economy — Represents a combination of city and highway driving. The scale represents the range of combined fuel economy for other vehicles in the class.

Estimated Annual Fuel Cost — Provides an estimated annual fuel cost, based on 15,000 miles (20,000 km) per year multiplied by the cost per gallon (based on EPA fuel cost data) divided by the combined fuel economy.

For more information on fuel economy ratings and factors that affect fuel economy, visit *www.fueleconomy.gov* (Canada: Visit *www.vehicles.gc.ca*)

Fuel Economy Factors
The following factors can lower your vehicle's fuel economy:
- Aggressive driving (hard acceleration and braking)
- Excessive idling, accelerating and braking in stop-and-go traffic
- Cold engine operation (engines are more efficient when warmed up)
- Driving with a heavy load or the air conditioner running
- Improperly inflated tires

Improving Fuel Economy

Vehicle Maintenance
A properly maintained vehicle maximizes fuel economy. Poor maintenance can significantly reduce fuel economy. Always maintain your vehicle according to the maintenance messages displayed on the information display (see **Owner's Maintenance Checks** on page 323). For example:

- **Use the recommended viscosity motor oil, displaying the API Certification Seal (see page 326).**

- **Maintain proper tire inflation** — An underinflated tire increases "rolling resistance," which reduces fuel economy.

- **Avoid carrying excess weight in your vehicle** — It puts a heavier load on the engine, increasing fuel consumption.

- **Keep your vehicle clean** — In particular, a build-up of snow or mud on your vehicle's underside adds weight and rolling resistance. Frequent cleaning helps your fuel economy.

Drive Efficiently
- **Drive moderately** — Rapid acceleration, abrupt cornering, and hard braking increase fuel consumption.

- **Observe the speed limit** — Aerodynamic drag has a big effect on fuel economy at speeds above 45 mph (75 km/h). Reduce your speed and you reduce the drag. Trailers, car top carriers, roof racks and bike racks are also big contributors to increased drag.

- **Always drive in the highest gear possible** — If your vehicle has a manual transmission, you can boost your fuel economy by up shifting as early as possible.

- **Avoid excessive idling** — Idling results in 0 miles per gallon (0 kms per liter).

CONTINUED

Fuel Economy

- **Minimize the use of the air conditioning system** — The A/C puts an extra load on the engine which makes it use more fuel. Use the fresh-air ventilation when possible.

- **Plan and combine trips** — Combine several short trips into one. A warmed-up engine is more fuel efficient than a cold one.

Calculating Fuel Economy

Measuring Techniques
Direct calculation is the recommended source of information about your actual fuel economy. Using frequency of fill-ups or taking fuel gauge readings are NOT accurate measures of fuel economy. Fuel economy may improve over the first several thousand miles (kilometers).

Checking Your Fuel Economy

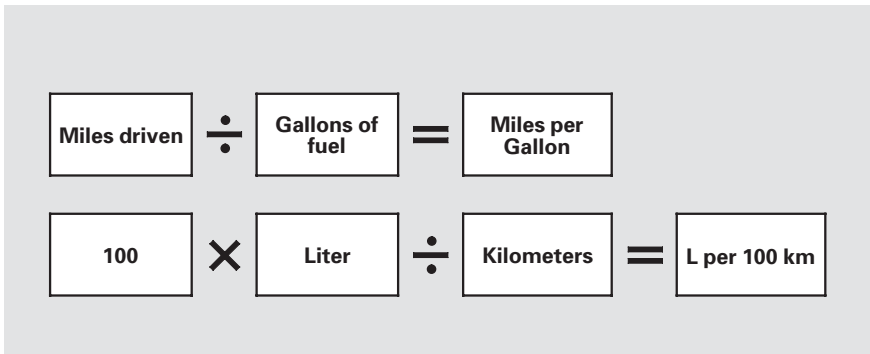

1. Fill the fuel tank until the nozzle automatically clicks off.
2. Reset trip counter to zero.
3. Record the total gallons (liters) needed to refill.
4. Follow one of the simple calculations above.

Accessories and Modifications

Modifying your vehicle, or installing some non-Honda accessories, can make it unsafe. Before you make any modifications or add any accessories, be sure to read the following information.

Accessories
Your dealer has Honda accessories that allow you to personalize your vehicle. These accessories have been designed and approved for your vehicle, and are covered by warranty.

Although non-Honda accessories may fit on your vehicle, they may not meet factory specifications, and could adversely affect your vehicle's handling and stability.

⚠ WARNING

Improper accessories or modifications can affect your vehicle's handling, stability, and performance, and cause a crash in which you can be hurt or killed.

Follow all instructions in this owner's manual regarding accessories and modifications.

Your vehicle should not be used to carry a slide-in camper.
If you install a truck cap, be sure it is properly installed and does not exceed your vehicle's load limits (see page 260).

When properly installed, cellular phones, alarms, two-way radios, and low-powered audio systems should not interfere with your vehicle's computer controlled systems, such as your airbags, anti-lock brakes, and tire pressure monitoring system.

Before installing any accessory:

- Make sure the accessory does not obscure any lights, or interfere with proper vehicle operation or performance.
- Be sure electronic accessories do not overload electrical circuits (see page 378) or interfere with the proper operation of your vehicle.

CONTINUED

Accessories and Modifications

- Before installing any electronic accessory, have the installer contact your dealer for assistance. If possible, have your dealer inspect the final installation.

- Do not install accessories on the side pillars or across the rear windows. Accessories installed in these areas may interfere with proper operation of the side curtain airbags.

Modifying Your Vehicle
Removing parts from your vehicle, or replacing components with non-Honda components could seriously affect your vehicle's handling, stability, and reliability.

Some examples are:
- Lowering the vehicle with a non-Honda suspension kit that significantly reduces ground clearance can allow the undercarriage to hit speed bumps or other raised objects, which could cause the airbags to deploy.

- Raising your vehicle with a non-Honda suspension kit can affect the handling and stability.

- Non-Honda wheels, because they are a universal design, can cause excessive stress on suspension components and will not be compatible with the tire pressure monitoring system (TPMS).

- Larger or smaller wheels and tires can interfere with the operation of your vehicle's anti-lock brakes and other systems.

- Modifying your steering wheel or any other part of your vehicle's safety systems could make the systems ineffective.

If you plan to modify your vehicle, consult your dealer.

Carrying Cargo

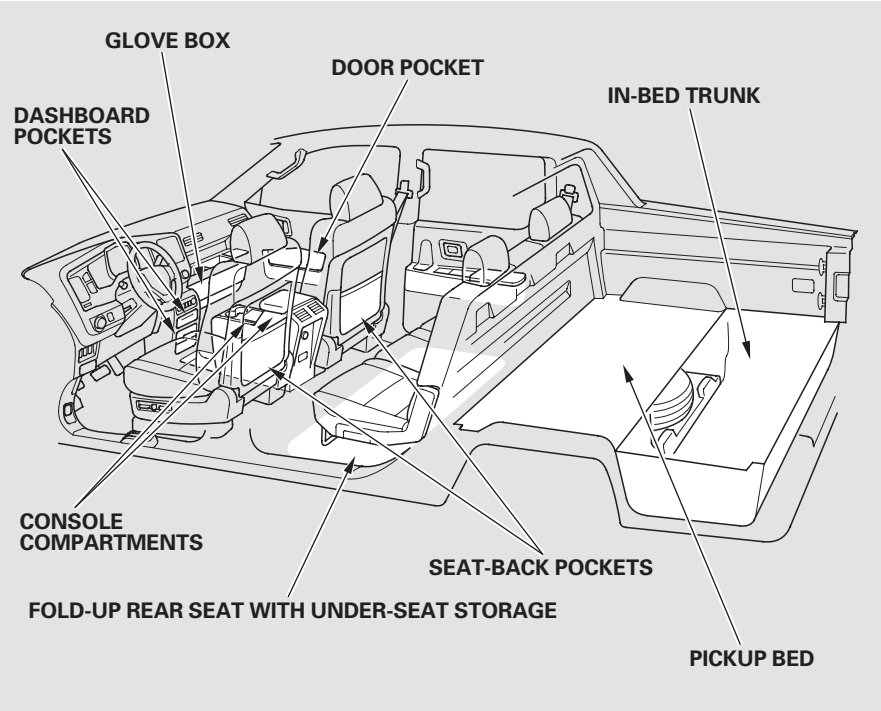

The pickup bed on your vehicle allows you to carry heavy and large cargo. You can also store items in the In-Bed Trunk and on a roof-rack (if equipped).

Your vehicle also has these convenient storage areas inside:

- Glove box
- Front door and seat-back pockets
- Fold-up rear seat with under-seat storage
- Console compartment
- Pockets on the dashboard

However, carrying too much cargo, or improperly storing it, can affect your vehicle's handling, stability, stopping distance, and tires, and make it unsafe. Before carrying any type of cargo, be sure to read the following pages.

Carrying Cargo

Load Limits (Payload)
The maximum load for your vehicle is:
On vehicles without moonroof
1,520 lbs (690 kg)
On vehicles with moonroof
1,470 lbs (670 kg)

See Tire And Loading Information label attached to the driver's doorjamb.

Label Example

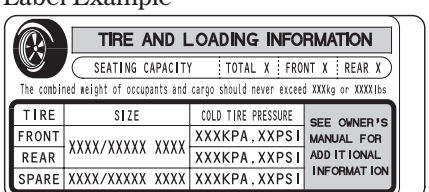
TIRE AND LOADING INFORMATION

SEATING CAPACITY	TOTAL X	FRONT X	REAR X

The combined weight of occupants and cargo should never exceed XXXkg or XXXXlbs

TIRE	SIZE	COLD TIRE PRESSURE	
FRONT	XXXX/XXXXX XXXX	XXXKPA, XXPSI	SEE OWNER'S MANUAL FOR ADDITIONAL INFORMATION
REAR		XXXKPA, XXPSI	
SPARE	XXXX/XXXXX XXXX	XXXKPA, XXPSI	

These figures include the total weight of all occupants, cargo, and accessories, and the tongue load if you are towing a trailer.

⚠ WARNING

Overloading or improper loading can affect handling and stability and cause a crash in which you can be hurt or killed.

Follow all load limits and other loading guidelines in this manual.

Steps for Determining Correct Load Limit:

1. Locate the statement "The combined weight of occupants and cargo should never exceed XXX kg or XXX lbs." on your vehicle's placard.

2. Determine the combined weight of the driver and passengers that will be riding in your vehicle.

3. Subtract the combined weight of the driver and passengers from XXX kg or XXX lbs.

4. The resulting figure equals the available amount of cargo and luggage load capacity. For example, if the “XXX” amount equals 1,400 lbs. and there will be five 150 lb. passengers in your vehicle, the amount of available cargo and luggage load capacity is 650 lbs.
(1,400 − 750 (5 × 150) = 650 lbs.)

5. Determine the combined weight of luggage and cargo being loaded on the vehicle. That weight may not safely exceed the available cargo and luggage load capacity calculated in Step 4.

6. If your vehicle will be towing a trailer, load from your trailer will be transferred to your vehicle. Consult this manual to determine how this reduces the available cargo and luggage load capacity of your vehicle.

Example 1		≧		+	
	Max Load (1,520 lbs)		**Passenger Weight (150 lbs x 2 = 300 lbs)**		**Cargo Weight (1,220 lbs)**
Example 2		≧		+	
	Max Load (1,520 lbs)		**Passenger Weight (150 lbs x 4 = 600 lbs)**		**Cargo Weight (920 lbs)**
Example 3		≧		+	
	Max Load (1,520 lbs)		**Passenger Weight (150 lbs x 5 = 750 lbs)**		**Cargo Weight (770 lbs)**

In addition, the total weight of the vehicle, all occupants, accessories, cargo, and trailer tongue load must not exceed the Gross Vehicle Weight Rating (GVWR) or the Gross Axle Weight Rating (GAWR). Both are on a label on the driver’s doorjamb.

Carrying Cargo

Carrying Items in the Passenger Compartment

- Store or secure all items that could be thrown around and hurt someone during a crash.
- Be sure items placed on the floor behind the front seats cannot roll underneath and interfere with the proper operation of the seats, the sensors under the seats, or the driver's ability to operate the pedals.
- Keep the glove box closed while driving. If it is open, a passenger could injure their knees during a crash or sudden stop.
- If you fold the rear seats up, tie down items that could be thrown about the vehicle during a crash or sudden stop. Also, keep all cargo below the bottom of the windows. If it is higher, it could interfere with the proper operation of the side curtain airbags.
- Distribute cargo evenly on the floor of the cargo area with the rear seats folded up, placing the heaviest items on the bottom and as far forward as possible. Tie down items that could be thrown about the vehicle during a crash or sudden stop.

Carrying Cargo in the In-Bed Trunk or on a Roof Rack

- Distribute cargo evenly on the floor in the In-Bed Trunk, placing the heaviest items on the bottom and as far forward as possible. Tie down items that could be thrown during a crash or sudden stop.
- Make sure the In-Bed Trunk lid is closed securely before driving.
- Be sure the total weight of the items in the In-Bed Trunk does not exceed 300 lbs (136 kg).
- If you carry any items on a roof rack, be sure the total weight of the rack and the items does not exceed 110 lbs (50 kg).

If you use an accessory roof rack, the roof rack weight limit may be lower. Refer to the information that came with your roof rack.

Carrying Cargo in the Pickup Bed
Your vehicle can carry a large amount of cargo in the pickup bed.

However, the pickup bed is not intended for carrying passengers. People who ride in the pickup bed can be very seriously injured or killed in a crash (see page 8).

Make sure your cargo is properly loaded and all items are secured so they will not shift or fall out while driving.

⚠ WARNING

Allowing passengers to ride in the pickup bed or on the tailgate can result in death or serious injury in a crash.

Make sure all passengers ride in a seat and wear a seat belt properly.

- When loading and unloading cargo, make sure all passengers or any objects are clear of the tailgate before opening or closing it. The tailgate should be closed securely before driving when it is not used as the extended pickup bed.
- The maximum allowable loading weight on the pickup bed is 1,100 lbs (500 kg). Do not exceed the load limit (see page 260).
- Distribute cargo evenly on the pickup bed. Place the heaviest items on the bottom and as far forward as possible of the rear axle. Tie down and secure all items that could be thrown out of the vehicle during a crash or sudden stop.
- If you stack items higher than the bed sides, tailgate, or back window, secure them with a net or cover. This will reduce the risk of items being thrown out of the pickup bed during a crash or sudden stop.
- When the tailgate is dropped open, it can be used as an extended pickup bed. The maximum allowable weight on the tailgate while driving is 300 lbs (136 kg). Exceeding this limit could damage the tailgate.
- Carrying heavy cargo in the pickup bed will raise your vehicle's center of gravity. This can affect handling and performance. Drive more slowly and cautiously, and allow extra time and distance for braking.

CONTINUED

Carrying Cargo

⚠ WARNING

Never let passengers ride in the pickup bed, in the In-Bed Trunk space, or on the bed rails. This could cause very serious injuries or death. No one should ride in any position on your vehicle that is not equipped with seats and seat belts.

Exceeding load limits or improperly loading cargo on the vehicle can cause a crash in which you can be seriously injured or killed.

Load the cargo carefully before starting to drive.

Tie Down Cleats

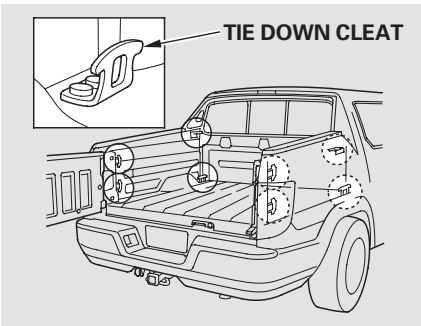

Your vehicle has eight tie down cleats on the pickup bed.

They are used to secure cargo on the pickup bed and to install a cargo net for securing items. Do not use any other parts of the pickup bed to secure cargo or nets.

You can also support motorcycles on the pickup bed floor with the cleats. The floor panel of the pickup bed is designed to hold motorcycle tires. Be sure to tighten motorcycles securely, with an approved tie-down or motorcycle strap, according to the motorcycle maker's instructions.

When carrying motorcycles or any other cargo, do not spill any oil or fluid on the pickup bed. A spilled liquid may damage the pickup bed.

Optional Cargo Net
The cargo net can be used to hold lightweight items in the pickup bed. Secure all items properly. The net may not prevent heavy items from being thrown outward in a crash or a sudden stop.

Optional Cargo Cover
The cargo cover can be used to cover the cargo area on the pickup bed.

Pickup Bed Repair
Your vehicle's pickup bed has a rust resistant surface. To repair small chips and scratches in the bed, a repair kit is available from your dealer. More extensive damage should be repaired by your dealer.

To avoid problems with the bed surface and the In-Bed Trunk lid, do not use spray-in bed liner products.

This section gives you tips on starting the engine under various conditions, and how to operate the automatic transmission. It also includes important information on parking your vehicle, the braking system, the Variable Torque Management® 4-wheel drive (VTM-4®) system, the vehicle stability assist (VSA®), aka Electronic Stability Control (ESC), system, the tire pressure monitoring system (TPMS), and facts you need if you are planning to tow a trailer or drive off-highway.

Driving Guidelines 268
Preparing to Drive 269
Starting the Engine 270
Automatic Transmission 271
Variable Torque Management® 4WD (VTM-4®) System 276
Tire Pressure Monitoring System (TPMS) 278
Parking 286
Braking System 288
Anti-lock Brakes (ABS) 289
Vehicle Stability Assist (VSA®), aka Electronic Stability Control (ESC), System 291
Towing Weight Limits 293
Towing Weight Guidelines 295
Towing a Trailer 296
Off-Highway Driving Guidelines 306

Driving Guidelines

Your vehicle has higher ground clearance that allows you to travel over bumps, obstacles, and rough terrain. It also provides good visibility so you can anticipate problems earlier.

Your vehicle allows you to carry more cargo than a typical passenger vehicle.

Because your vehicle rides higher off the ground, it has a high center of gravity that can cause it to roll over if you make abrupt turns. Utility vehicles have a significantly higher roll over rate than other types of vehicles.

To prevent rollovers or loss of control:

- Take corners at slower speeds than you would with a passenger vehicle.
- Avoid sharp turns and abrupt maneuvers whenever possible.
- Make sure the cargo is properly loaded and all items are secured so they will not shift while driving.
- Do not modify your vehicle in any way that would raise the center of gravity.
- Do not carry heavy cargo on the roof.

With heavy cargo on the pickup bed, your vehicle has a higher center of gravity. Drive slowly and cautiously, and allow more time and distance for braking. Loading heavy cargo could affect your vehicle's handling and performance.

See page 306 for off-highway driving guidelines.

Preparing to Drive

You should do the following checks and adjustments before you drive your vehicle.

1. Make sure all windows, mirrors, and outside lights are clean and unobstructed. Remove frost, snow, or ice.

2. Check that the hood is fully closed.

3. Check that the tailgate is fully closed when it is not used as an extended pickup bed.

4. Visually check the tires. If a tire looks low, use a gauge to check its pressure.

5. Check that any items you may be carrying are stored properly or fastened down securely.

6. Check the seat adjustment (see pages 119 and 121).

7. Check the adjustment of the inside and outside mirrors (see page 133).

8. Check the steering wheel adjustment (see page 99).

9. Make sure the doors and In-Bed Trunk are securely closed and locked.

10. Fasten your seat belt. Check that your passengers have fastened their seat belts (see page 16).

11. When you start the engine, check the gauges and indicators in the instrument panel, and the messages on the information display or multi-information display (depending on models) (see pages 61, 76, 77, and 90).

Starting the Engine

1. Apply the parking brake.
2. In cold weather, turn off all electrical accessories to reduce the drain on the battery.
3. Make sure the shift lever is in Park. Press on the brake pedal.
4. Without touching the accelerator pedal, turn the ignition key to the START (III) position. Do not hold the key in the START (III) position for more than 15 seconds at a time. If the engine does not start right away, pause for at least 10 seconds before trying again.

NOTICE

The immobilizer system protects your vehicle from theft. If an improperly coded key (or other device) is used, the engine's fuel system is disabled. For more information, see page 101 .

NOTICE

The engine is harder to start in cold weather. Also, the thinner air found at altitudes above 8,000 feet (2,400 meters) adds to this problem.

Shift Lever Position Indicators

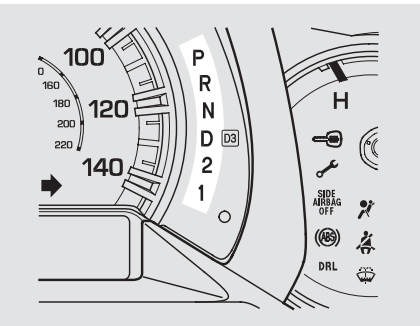

These indicators on the instrument panel show which position the shift lever is in.

The "D" indicator comes on for a few seconds when you turn the ignition switch to the ON (II) position. If it flashes while driving (in any shift position), it indicates a possible problem in the transmission.

If the malfunction indicator lamp comes on along with the "D" indicator, there is a problem with the automatic transmission control system. Avoid rapid acceleration, and have the transmission checked by your dealer as soon as possible.

On models with navigation system
When the "D" indicator warns of a possible problem with the transmission, you will see a "CHECK TRANSMISSION" message on the multi-information display (see page 91).

Shifting

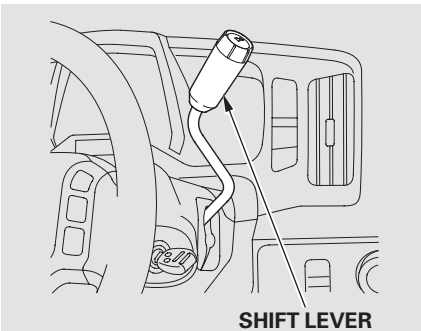

To shift from Park to any position, press firmly on the brake pedal, and pull the shift lever toward you. You cannot shift out of Park when the ignition switch is in the LOCK (0) or ACCESSORY (I) position.

CONTINUED

Automatic Transmission

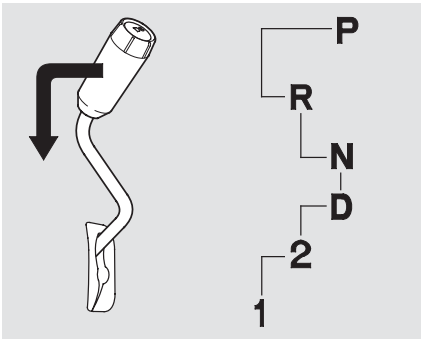

To shift from:	Do this:
P to R	Press the brake pedal, and pull the shift lever towards you.
R to P N to R D to 2 2 to 1	Pull the shift lever towards you.
1 to 2 2 to D D to N N to D R to N	Move the shift lever.

Park (P) — This position mechanically locks the transmission. Use Park whenever you are turning off or starting the engine. To shift out of Park, you must press on the brake pedal and have your foot off the accelerator pedal. Pull the shift lever towards you, then move it out of Park.

If you have done all of the above and still cannot move the lever out of Park, see **Shift Lock Release** on page 275 .

You must also pull the shift lever towards you to shift into Park. To avoid transmission damage, come to a complete stop before shifting into Park. The shift lever must be in Park for you to remove the key from the ignition switch.

Reverse (R) — Press the brake pedal and pull the shift lever towards you to shift from Park to reverse. To shift from reverse to neutral, come to a complete stop, and then shift. Pull the shift lever towards you before shifting into reverse from neutral.

Neutral (N) — Use neutral if you need to restart a stalled engine, or if it is necessary to stop briefly with the engine idling. Shift to the Park position if you need to leave your vehicle for any reason. Press on the brake pedal when you are moving the shift lever from neutral to another gear.

After you stop in D, 2, 1, N, or R position with the ignition switch in the ACCESSORY (I) position for an extended period, you may not be able to move the shift lever from neutral to reverse or Park. In this case, press the brake pedal, and turn the ignition switch to the ON (II) position, then shift out of neutral.

Drive (D) — Use this position for your normal driving. The transmission automatically selects a suitable gear (1 through 5) for your speed and acceleration. You may notice the transmission shifting up at higher engine speeds when the engine is cold. This helps the engine warm up faster.

D3

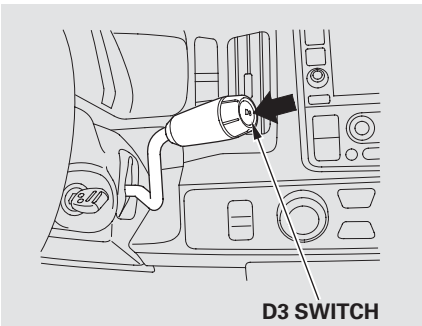

Press the D3 switch on the end of the shift lever to turn this mode on or off; the D3 indicator comes on whenever D3 is selected.

The D3 switch can be operated only when the ignition switch is in the ON (II) position and the shift lever is in the D position.

CONTINUED

Automatic Transmission

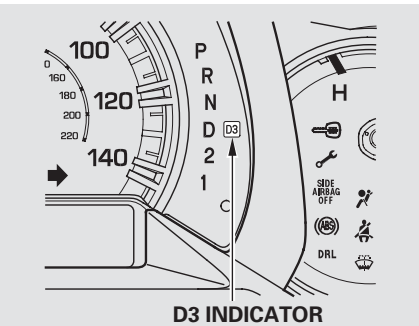

D3 INDICATOR

When D3 is on, the transmission selects only the first three gears. Use D3 for engine braking when going down a steep hill.

When towing a trailer on level roads under normal driving conditions, do not use D3. This will increase the automatic transmission fluid temperature and may cause overheating.

Shifting out of the D position will cancel D3, and cause the D3 indicator to go out. Selecting the D position again will resume D3, and the indicator will come on.

Turning the ignition switch to the LOCK (0) position turns D3 off. To use D3 when you restart the engine, select the D position, and press the D3 switch again.

The D3 indicator also comes on for a few seconds when you turn the ignition switch to the ON (II) position.

Second (2) — To shift to second, pull the shift lever towards you, then shift to the lower gear. This position locks the transmission in second gear. It does not downshift to first gear when you come to a stop.

Use second gear:

- For more power when climbing.
- To increase engine braking when going down steep hills.
- For starting out on a slippery surface or in deep snow.
- To help reduce wheel spin.
- When driving downhill with a trailer.

First (1) — To shift from second to first, pull the shift lever towards you, then shift to the lower gear. This position locks the transmission in first gear. By upshifting and downshifting through 1, 2, and D, you can operate the transmission much like a manual transmission without a clutch pedal.

If you shift into first position when the vehicle speed is above 28 mph (45 km/h), the transmission shifts into second gear first to avoid sudden engine braking.

Engine Speed Limiter
If you exceed the maximum speed for the gear you are in, the engine speed will enter into the tachometer's red zone. If this occurs, you may feel the engine cut in and out. This is caused by a limiter in the engine's computer controls. The engine will run normally when you reduce the rpm below the red zone.

Shift Lock Release
This allows you to move the shift lever out of Park if the normal method of pushing on the brake pedal and pulling the shift lever does not work.

1. Set the parking brake.

2. Make sure the ignition switch is in the LOCK (0) position.

3. Put a cloth on the notch of the shift lock release slot cover to prevent scratches. Using a small flat-tip screwdriver or a metal fingernail file, carefully pry on the notch of the cover to remove it.

CONTINUED

Automatic Transmission, VTM-4® System

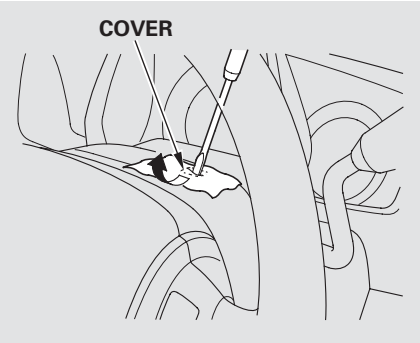

4. Insert the built-in key into the shift lock release slot.

5. Push down on the key while you pull the shift lever towards you, and move it out of Park to neutrel.

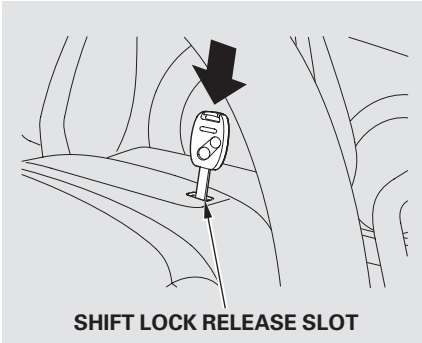

6. Remove the key from the shift lock release slot, then reinstall the cover. Make sure the notch on the cover is on the instrument panel side. Press the brake pedal, and restart the engine.

If you need to use the shift lock release, it means your vehicle is developing a problem. Have it checked by your dealer.

VTM-4® System

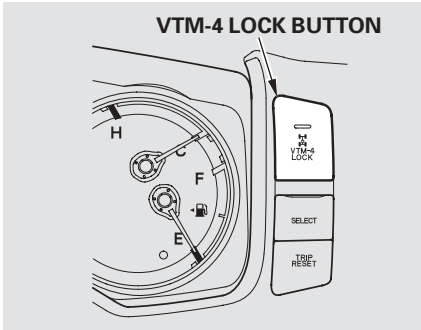

Your vehicle is equipped with a Variable Torque Management® 4-wheel-drive system (VTM-4®) that distributes engine torque to the appropriate drive axle depending on the available traction conditions. The system is completely automatic, always active, and does not require any driver interaction.

If you become stuck, you can activate the VTM-4 by pressing the VTM-4 LOCK button while in first (1), second (2), or reverse (R) gear below 18 mph (30 km/h). This mode overrides the auto system to send maximum torque to the rear axle. This mode is only intended for intermittent use at low speed to free your vehicle if it becomes stuck or when you encounter a steep grade with one wheel on a slippery surface. Generally, you should first allow the auto mode to operate to adjust for the available traction conditions.

To Engage the VTM-4 Lock:

1. The vehicle speed must be below 18 mph (30 km/h).
2. Move the shift lever to first (1), second (2), or reverse (R) gear.
3. Press the VTM-4 LOCK button. The indicator in the button comes on.

To get unstuck, apply light pressure to the accelerator pedal. Do not spin the front tires for more than a few seconds. Because of the amount of torque applied to the rear tires, they should not spin. This is normal. If you are not able to move the vehicle, stop and reverse direction.

NOTICE

Do not use the VTM-4 LOCK button on dry, paved roads. Driving on dry, paved roads with VTM-4 Lock ON may damage the rear differential when making a turn. Strange noise and vibration can also result.

The VTM-4 Lock will temporarily disengage when the vehicle speed exceeds 18 mph (30 km/h). The indicator in the button will remain on.

To Disengage the VTM-4 Lock, do any of the following:

- Press the VTM-4 LOCK button.
- Move the shift lever to D.
- Turn the ignition switch to the LOCK (0) position.

NOTICE

Do not continuously spin the front tires of your vehicle. Continuously spinning the front tires can cause transmission or rear differential damage.

Tire Pressure Monitoring System (TPMS)

On models without navigation system
Your vehicle is equipped with a tire pressure monitoring system (TPMS) that turns on every time you start the engine and monitors the pressure in your tires while driving.

Each tire has its own pressure sensor (not including the spare tire). If the air pressure of a tire becomes significantly low, the sensor in that tire immediately sends a signal that causes the low tire pressure indicator and the appropriate tire on the tire pressure monitor to come on.

Low Tire Pressure Indicator

When the low tire pressure indicator is on, one or more of your tires is significantly underinflated. You should stop and check your tires as soon as possible, and inflate them to the proper pressure as indicated on the vehicle's tire information placard.

If you think you can safely drive a short distance to a service station, proceed slowly, and inflate the tire to the recommended pressure shown on the driver's doorjamb.

If the tire is flat, or if the tire pressure is too low to continue driving, replace the tire with the compact spare tire (see page 360).

If you cannot make the low tire pressure indicator go out after inflating the tires to the specified values, have your dealer check the system as soon as possible.

Driving on a significantly under inflated tire causes the tire to overheat and can lead to tire failure. Underinflation also reduces fuel efficiency and tire tread life, and may affect the vehicle's handling and stopping ability.

Because tire pressure varies by temperature and other conditions, the low tire pressure indicator may come on unexpectedly.

For example, if you check and fill your tires in a warm area, then drive in extremely cold weather, the tire pressure will be lower than measured and could be underinflated and cause the low tire pressure indicator to come on. Or, if you check and adjust your tire pressure in cooler conditions, and drive into extremely hot conditions, the tire may become overinflated. However, the low tire pressure indicator will not come on if the tires are overinflated.

Refer to page 349 for tire inflation guidelines.

Although your tire pressure is monitored, you must manually check the tire pressures monthly.

Each tire, including the spare, should be checked monthly when cold, and set to the recommended inflation pressure as specified on the tire information label and in the owner's manual (see page 350).

Tire Pressure Monitor

The appropriate tire indicator and low tire pressure indicator comes on if a tire becomes significantly underinflated. See **Low Tire Pressure Indicator** on page 278 .

TPMS **Tire Pressure Monitoring System (TPMS) Indicator**

This indicator comes on and stays on if there is a problem with the tire pressure monitoring system.

If this happens, the system will shut off and no longer monitor tire pressures. Have the system checked by your dealer as soon as possible.

If the low tire pressure indicator or TPMS indicator comes on, the VSA system automatically turns on even if the VSA system is turned off by pressing the VSA OFF switch (see page 292). If this happens, you cannot turn the VSA system off by pressing the VSA OFF switch again.

When you restart the vehicle with the compact spare tire, the TPMS indicator may also come on and stay on after driving several miles (kilometers).

Tire Pressure Monitoring System (TPMS)

Changing a Tire with TPMS
If you have a flat tire, the low tire pressure indicator will come on. Replace the indicated flat tire with the compact spare tire (see page 361).

Each wheel (except the compact spare tire wheel) is equipped with a tire pressure sensor. You must use TPMS specific wheels. It is recommended that you always have your tires serviced by your dealer or qualified technician.

After you replace the flat tire with the compact spare tire, the low tire pressure indicator stays on. This is normal; the system is not monitoring the spare tire pressure. Manually check the spare tire pressure to be sure it is correct. After several miles (kilometers) driving with the compact spare tire, the TPMS indicator comes on and the low tire pressure indicator goes off.

The low tire pressure indicator or the TPMS indicator will go off, after several miles (kilometers) driving, when you replace the spare tire with the specified regular tire equipped with the tire pressure monitor sensor.

Never use a puncture-repairing agent in a flat tire. If used, you will have to replace the tire pressure sensor. Have the flat tire repaired by your dealer as soon as possible.

As required by the FCC:
This device complies with Part 15 of the FCC rules. Operation is subject to the following two conditions: (1) This device may not cause harmful interference, and (2) this device must accept any interference received, including interference that may cause undesired operation.

Changes or modifications not expressly approved by the party responsible for compliance could void the user's authority to operate the equipment.

This device complies with Industry Canada Standard RSS-210.
Operation is subject to the following two conditions: (1) this device may not cause interference, and (2) this device must accept any interference that may cause undesired operation of the device.

On models with navigation system
Your vehicle is equipped with a tire pressure monitoring system (TPMS) that turns on every time you start the engine and monitors the pressure in your tires while driving.

Each tire has its own pressure sensor. If the air pressure of a tire becomes significantly low, the sensor in that tire immediately sends a signal that causes the low tire pressure/TPMS indicator in the instrument panel to come on. If this happens, you will see which tire is losing pressure on the multi-information display along with a "CHECK TIRE PRESSURE" message.

Low Tire Pressure/ TPMS Indicator

When the low tire pressure/TPMS indicator is on, one or more of your tires is significantly underinflated. You should stop and check your tires as soon as possible, and inflate them to the proper pressure as indicated on the vehicle's tire information placard.

It is possible that the pressures shown on the multi-information display and the pressures you manually measure are slightly different.
If the difference is significant or you cannot make the low tire pressure/ TPMS indicator and message on the multi-information display go out after inflating the tires to the specified values, have your dealer check the system as soon as possible.

If you think you can safely drive a short distance to a service station, proceed slowly to the station, then inflate the tire to the recommended pressure.

If the tire is flat, or if the tire pressure is too low to continue driving, replace the tire with the compact spare tire (see page 361).

Driving on a significantly under-inflated tire causes the tire to overheat and can lead to tire failure. Under-inflation also reduces fuel efficiency and tire tread life, and may affect the vehicle's handling and stopping ability.

Because tire pressure varies by temperature and other conditions, the low tire pressure/TPMS indicator may come on unexpectedly.

CONTINUED

Tire Pressure Monitoring System (TPMS)

For example, if you check and fill your tires in a warm area, then drive in extremely cold weather, the tire pressure will be lower than measured and could be underinflated and cause the low tire pressure/ TPMS indicator to come on. Or, if you check and adjust your tire pressure in cooler conditions, and drive into extremely hot conditions, the tire may become overinflated. However, the low tire pressure/ TPMS indicator will not come on if the tires are overinflated.

Refer to page 349 for tire inflation guidelines.

If there is a problem with the TPMS, this indicator begins to flash. It stops flashing after approximately 1 minute, then stays on. You will also see a “CHECK TPMS SYSTEM” message on the multi-information display (see page 91).

Although your tire pressure is monitored, you must manually check the tire pressures monthly.

Each tire, including the spare, should be checked monthly when the vehicle is cold, and set to the recommended inflation pressure as specified on the vehicle placard and in the owner’s manual (see page 350).

Tire Pressure Monitor

To select the tire pressure monitor, press the INFO button several times with the ignition switch in the ON (II) position.

You will see the above display on the multi-information display when all tire pressures are normal.

U.S. models

To see the inflation pressures of all four tires, press the SEL/RESET button. The display changes as shown above.

Canadian models

Each tire pressure is shown in PSI (U.S. models) or in kPa (Canadian models).

Each tire has its own pressure sensor. If the air pressure of a tire becomes significantly low, the sensor in that tire immediately sends a signal that causes the low tire pressure/TPMS indicator in the instrument panel to come on. If this happens, you will see which tire is losing pressure on the multi-information display along with a "CHECK TIRE PRESSURE" message.

CONTINUED

Tire Pressure Monitoring System (TPMS)

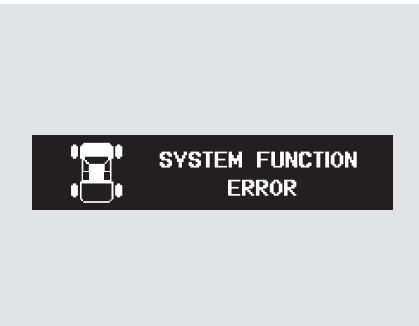

If there is a problem with the TPMS, the tire pressure monitor shows a "SYSTEM FUNCTION ERROR" message and the tire pressure readings are not displayed. If this happens, you will first see a system warning message "CHECK TPMS SYSTEM" on the multi-information display.

TPMS System Failure

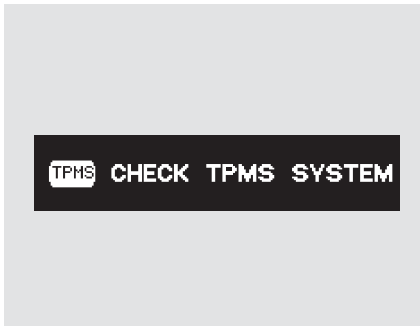

If there is a problem with the TPMS, you will see the above message on the multi-information display.

If you see this message, the system is off and is not monitoring the tire pressures. Have the system checked by your dealer as soon as possible.

Also, the low tire pressure/TPMS indicator begins to flash, then stays on (see page 281).

If the low tire pressure/TPMS indicator comes on, or the multi-information display shows a "CHECK TPMS SYSTEM" message, the VSA system automatically turns on even when the VSA system is turned off by pressing the VSA OFF switch (see page 292). If this happens, you cannot turn the VSA system off by pressing the VSA OFF switch again.

When you restart the vehicle with the compact spare tire, the TPMS system message will also be displayed on the multi-information display after several miles (kilometers) driving.

Changing a Tire with TPMS

If you have a flat tire, the low tire pressure/TPMS and tire monitor indicators will come on. Replace the indicated flat tire with the compact spare tire (see page 361).

After the flat tire is replaced with the spare tire, the low tire pressure/ TPMS indicator stays on while driving. After several miles (kilometers) driving, this indicator begins to flash, then stays on again. You will also see a "CHECK TPMS SYSTEM" message on the multi-information display. This is normal; the system cannot monitor the spare tire pressure. Manually check the spare tire pressure to be sure it is correct.

This indicator and the warning message on the multi-information display will go off, after several miles (kilometers) driving, when the spare tire is replaced with the specified regular tire equipped with the tire pressure monitor sensor.

Each wheel is equipped with a tire pressure sensor mounted inside the tire behind the valve stem. You must use TPMS specific wheels. It is recommended that you always have your tires serviced by your dealer or a qualified technician.

Never use a puncture-repairing agent in a flat tire. If used, you will have to replace the tire pressure sensor. Have the flat tire repaired by your dealer as soon as possible.

CONTINUED

Tire Pressure Monitoring System (TPMS), Parking

As required by the FCC:
This device complies with Part 15 of the FCC rules. Operation is subject to the following two conditions: (1) This device may not cause harmful interference, and (2) this device must accept any interference received, including interference that may cause undesired operation.

Changes or modifications not expressly approved by the party responsible for compliance could void the user's authority to operate the equipment.

This device complies with Industry Canada Standard RSS-210.
Operation is subject to the following two conditions: (1) this device may not cause interference, and (2) this device must accept any interference that may cause undesired operation of the device.

Parking
Always use the parking brake when you park your vehicle. Make sure the parking brake is set firmly, or your vehicle may roll if it is parked on an incline.

Set the parking brake before you put the transmission in Park. This keeps the vehicle from moving and putting pressure on the parking mechanism in the transmission.

Parking Tips

- Make sure the moonroof (if equipped) and the windows are closed.
- Turn off the lights.
- Place any packages, valuables, etc. in the cargo area in your vehicle or the In-Bed Trunk, or take them with you.
- Lock the doors.

  On vehicles with security system
  Check the indicator on the driver's door to verify that the security system is set.
- Never park over dry leaves, tall grass, or other flammable materials. The hot three way catalytic converter could cause these materials to catch on fire.
- If the vehicle is facing uphill, turn the front wheels away from the curb.
- If the vehicle is facing downhill, turn the front wheels toward the curb.
- Make sure the parking brake is fully released before driving away. Driving with the parking brake partially set can overheat or damage the rear brakes.

Braking System

Your vehicle is equipped with disc brakes at all four wheels. A power assist helps reduce the effort needed on the brake pedal. The emergency brake assist system increases the stopping force when you depress the brake pedal hard in an emergency situation. The anti-lock brake system (ABS) helps you retain steering control when braking very hard.

Resting your foot on the pedal keeps the brakes applied lightly, builds up heat, reduces their effectiveness and reduces brake pad life. In addition, fuel economy can be reduced. It also keeps your brake lights on all the time, confusing drivers behind you.

Constant application of the brakes when going down a long hill builds up heat and reduces their effectiveness. Use the engine to assist the brakes by taking your foot off the accelerator and downshifting to a lower gear.

Check the brakes after driving through deep water. Apply the brakes moderately to see if they feel normal. If not, apply them gently and frequently until they do. Be extra cautious and alert in your driving.

Braking System Design
The hydraulic system that operates the brakes has two separate circuits. Each circuit works diagonally across the vehicle (the left-front brake is connected with the right-rear brake, etc.). If one circuit should develop a problem, you will still have braking at two wheels.

Brake Pad Wear Indicators
If the brake pads need replacing, you will hear a distinctive, metallic screeching sound when you apply the brake pedal. If you do not have the brake pads replaced, they will screech all the time. It is normal for the brakes to occasionally squeal or squeak when you apply them.

Anti-lock Brakes (ABS)

The anti-lock brake system (ABS) helps prevent the wheels from locking up, and helps you retain steering control by pumping the brakes rapidly, much faster than a person can do it.

The electronic brake distribution (EBD) system, which is part of the ABS, also balances the front-to-rear braking distribution according to vehicle loading.

You should never pump the brake pedal. Let the ABS work for you by always keeping firm, steady pressure on the brake pedal. This is sometimes referred to as “stomp and steer.”

You will feel a pulsation in the brake pedal when the ABS activates, and you may hear some noise. This is normal: it is the ABS rapidly pumping the brakes. On dry pavement, you will need to press on the brake pedal very hard before the ABS activates. However, you may feel the ABS activate immediately if you are trying to stop on snow or ice.

ABS Indicator

If this indicator comes on, the anti-lock function of the braking system has shut down. The brakes still work like a conventional system, but without anti-lock. You should have your dealer inspect your vehicle as soon as possible.

On models with navigation system
You will also see a “CHECK ABS SYSTEM” message on the multi-information display (see page 91).

If the indicator comes on while driving, test the brakes as instructed on page 376 .

CONTINUED

Anti-lock Brakes (ABS)

If the ABS indicator and the brake system indicator come on together, and the parking brake is fully released, the EBD system may also be shut down.

On models with navigation system
If this happens, you will also see "CHECK ABS SYSTEM" and "CHECK BRAKE SYSTEM" messages on the multi-information display.

Test your brakes as instructed on page 376 . If the brakes feel normal, drive slowly and have your vehicle repaired by your dealer as soon as possible. Avoid sudden hard braking which could cause the rear wheels to lock up and possibly lead to a loss of control.

The VSA indicator will come on along with the ABS indicator.

Important Safety Reminders
ABS does not reduce the time or distance it takes to stop the vehicle. It only helps with the steering control during braking.

ABS will not prevent a skid that results from changing direction abruptly, such as trying to take a corner too fast or making a sudden lane change. Always drive at a safe speed for the road and weather conditions.

ABS cannot prevent a loss of stability. Always steer moderately when you are braking hard. Severe or sharp steering wheel movement can still cause your vehicle to veer into oncoming traffic or off the road.

A vehicle with ABS may require a longer distance to stop on loose or uneven surfaces, such as gravel or snow, than a vehicle without anti-lock.

Vehicle Stability Assist (VSA®), aka Electronic Stability Control (ESC), System

The vehicle stability assist (VSA) system helps to stabilize the vehicle during cornering if the vehicle turns more or less than desired. It also assists you in maintaining traction while accelerating on loose or slippery road surfaces. It does this by regulating the engine's output and by selectively applying the brakes.

When VSA activates, you may notice that the engine does not respond to the accelerator in the same way it does at other times. There may also be some noise from the VSA hydraulic system. You will also see the VSA activation indicator blink.

The VSA system cannot enhance the vehicle's driving stability in all situations and does not control your vehicle's entire braking system. It is still your responsibility to drive and corner at reasonable speeds and to leave a sufficient margin of safety.

VSA Activation Indicator

When VSA activates, you will see the VSA Activation indicator blink.

Vehicle Stability Assist (VSA) System Indicator

If this indicator comes on while driving, pull to the side of the road when it is safe, and turn off the engine. Reset the system by restarting the engine. If the VSA system indicator stays on or comes back on while driving, have the VSA system inspected by your dealer.

If the indicator does not come on when the ignition switch is turned to the ON (II) position, there may be a problem with the VSA system. Have your dealer inspect your vehicle as soon as possible.

On models with navigation system
You will also see a "CHECK VSA SYSTEM" message on the multi-information display if there is a problem with the VSA system.

On models without navigation system
- If the low tire pressure indicator or TPMS indicator comes on, see page 278 .

On models with navigation system
- If the low tire pressure/TPMS indicator comes on, see page 281 . Or, if the multi-information display shows a "CHECK TPMS SYSTEM" message with the indicator flashing, see page 91 .

In this case, you cannot turn off the VSA using the OFF switch again.

Without VSA, your vehicle will have normal braking and cornering ability, but it will not have VSA traction and stability enhancement.

Vehicle Stability Assist (VSA®), aka Electronic Stability Control (ESC), System

VSA OFF Switch
In certain unusual conditions when your vehicle gets stuck in shallow mud or fresh snow, it may be easier to free it with the VSA temporarily switched off. When the VSA system is off, the traction control system is also off. You should only attempt to free your vehicle with the VSA off if you are not able to free it when the VSA is on.

Immediately after freeing your vehicle, be sure to switch the VSA on again. We do not recommend driving your vehicle with the VSA and traction control systems switched off.

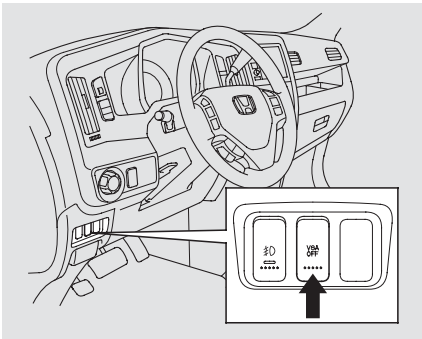

This switch is above the parking brake release handle. To turn the VSA system on and off, press and hold it until you hear a beep.

When VSA is off, the VSA activation indicator comes on as a reminder.

VSA is turned on every time you start the engine, even if you turned it off the last time you drove the vehicle.

VSA and Tire Sizes
Driving with varying tire or wheel sizes may cause the VSA to malfunction. When replacing tires, make sure they are of the same size and type as your original tires (see page 353).

If you install winter tires, make sure they are the same size as those that were originally supplied with your vehicle. Exercise the same caution during winter driving as you would if your vehicle was not equipped with VSA.

Towing Weight Limits

Your vehicle has been designed to tow a trailer, as well as carrying passengers and their cargo. To safely tow a trailer, you should carefully observe the load limits (see page 260), use the proper equipment, and follow the guidelines in this section.

Break-In Period
Avoid towing a trailer during your vehicle's first 600 miles (1,000 km) (see page 248).

Be sure to read the **Off-Highway Driving Guidelines** section on page 306 if you plan to tow off paved surfaces.

⚠ WARNING

Exceeding any load limit or improperly loading your vehicle and trailer can cause a crash in which you can be seriously hurt or killed.

Check the loading of your vehicle and trailer carefully before starting to drive.

Load Limits

Total Trailer Weight
The maximum allowable weight of the trailer and everything in or on it depends on the number of occupants in your vehicle and the type of trailer being towed (see page 295).

Towing a trailer that is too heavy can seriously affect your vehicle's handling and performance. It can also damage the engine and drivetrain.

CONTINUED

Towing Weight Limits

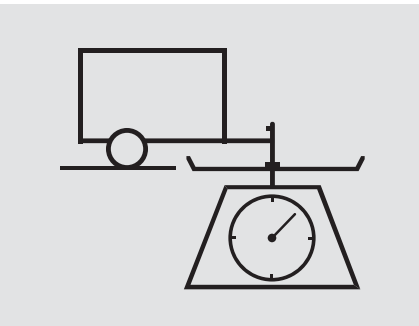

Tongue Load
The weight that the tongue of a fully-loaded trailer puts on the hitch should follow the recommended load guidelines (see page 295). Too much tongue load reduces front-tire traction and steering control. Too little tongue load can make the trailer unstable and cause it to sway.

Gross Vehicle Weight Rating (GVWR) — The maximum allowable weight of the vehicle, all occupants, all accessories, all cargo, and the tongue load is 6,050 lbs (2,745 kg).

Gross Axle Weight Rating (GAWR) — The maximum allowable weight on the vehicle axles is 3,105 lbs (1,410 kg) on the front axle, and 3,245 lbs (1,475 kg) on the rear axle.

Gross Combined Weight Rating (GCWR) — The maximum allowable weight of the fully loaded vehicle and trailer is 10,088 lbs (4,575 kg) with the proper hitch.

The GCWR must be reduced 2 percent for every 1,000 feet (305 meters) of elevation.

Estimating Loads
The best way to confirm that all loads are within limits is to check them at a public scale (see page 293).

To help ensure a safe drive to a scale, or if you cannot get to a public scale, we recommend that you estimate your total trailer weight and tongue load as described.

To Estimate the Total Trailer Weight
Add the weight of your trailer (as quoted by the manufacturer) with everything in or on the trailer. Then check the tables on page 295 to make sure you do not exceed the limit for your conditions.

Towing Weight Guidelines

Total Trailer Weight and Tongue Load Guidelines:

Number of Occupants*	Max. Trailer Weight	Max. Tongue Load**
2	5,000 lbs (2268 kg)	600 lbs (272 kg)
3	4,750 lbs (2155 kg)	600 lbs (272 kg)
4	4,750 lbs (2155 kg)	570 lbs (258 kg)
5	4,500 lbs (2041 kg)	516 lbs (234 kg)

* The corresponding weight limits assume occupants fill seats from the front of the vehicle to the back, each occupant weighs 150 lbs (70 kg), and each has 15 lbs (7 kg) of cargo in the cab, pickup bed, or In-Bed Trunk. Any additional weight, including cargo or accessories, reduces the maximum trailer weight and maximum tongue load. Never exceed the gross axle weight ratings (see page 294).

** Recommended tongue load should be 5—15% of the total trailer weight for boat trailers, and 10—15% of the total trailer weight for all other trailers.

Towing a Trailer

Checking Loads

To accurately check your loads at the public scale, the vehicle and trailer should be fully loaded, and all occupants should stay in the vehicle while the attendant watches the scale.

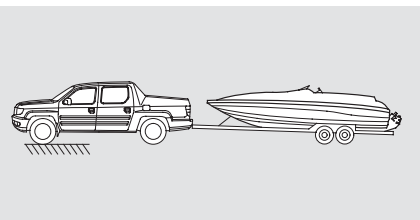

1. Check the front gross axle weight.
   Limit: 3,105 lbs (1,410 kg)

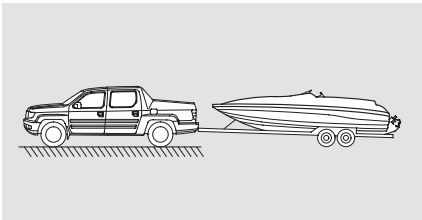

2. Check the gross vehicle weight.
   Limit: 6,050 lbs (2,745 kg)

3. Check the rear gross axle weight.
   Limit: 3,252 lbs (1,475 kg)

4. If you cannot weigh the rear axle directly, you can calculate the rear gross axle weight by subtracting the weight in step 1 from the weight in step 2.
   Limit: 2,945 lbs (1,335 kg)

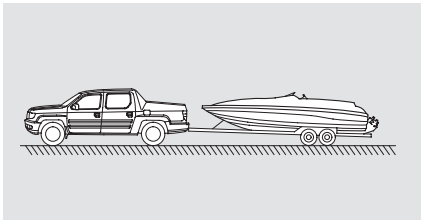

5. Check the gross combined weight.
   Limit: 10,088 lbs (4,575 kg)
   Remember, maximum gross combined weight should be decreased 2 % for every 1,000 feet (305 meters) of elevation.

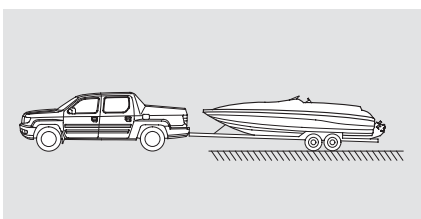

6. Check the weight of the hitched trailer. Write this number down.

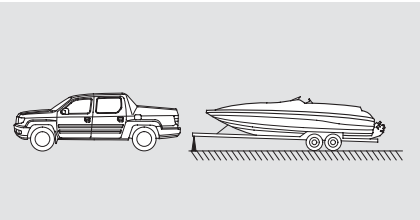

7. Check the weight of the unhitched trailer. Limit: See page 293 .

8. Calculate the tongue load.
   Subtract the weight in step 6 from the weight in step 7.
   Limit: See page 295 .
   Recommended: see page 295 .
   Range: 5-15% for boat trailers
   10-15% for other trailers

Towing Equipment and Accessories

Towing generally requires a variety of supplemental equipment. To ensure the best quality, we recommend that you purchase Honda equipment whenever possible.

Your dealer offers trailer packages that include a ball mount, hitch plug, and hitch pin. A wiring harness kit is also available from your dealer.

Discuss any additional needs with your trailer sales or rental agency, and make sure all equipment is properly installed, maintained, and also meets state, federal, province, and local regulations.

Hitch

Read the trailer manufacturer's instructions, and select the appropriate draw bar for the height of the trailer you will be towing.

Weight Distributing Hitch

A weight distributing hitch is not recommended for use with your vehicle, as an improperly adjusted weight distributing hitch may reduce handling, stability, and braking performance.

CONTINUED

Towing a Trailer

Trailer Brakes
Honda recommends that any trailer with a total trailer weight of 1,000 lbs (450 kg) or more has its own brakes.

There are two common types of trailer brakes: surge and electric. Surge brakes are common for boat trailers, since the brakes will get wet.

If you choose electric brakes, be sure they are electronically actuated. Do not attempt to tap into your vehicle's hydraulic system. No matter how successful it may seem, any attempt to attach trailer brakes to your vehicle's hydraulic system will lower braking effectiveness and create a potential hazard.

See your trailer dealer or rental agency for more information on installing electric brakes.

A factory installed, 4-pin gray connector is located under the instrument panel near the top of the parking brake pedal. This connector has all of the circuits required to install most electric trailer brake controllers. A jumper harness to adapt your electric trailer brake controller to the vehicle is included with the optional Genuine Honda trailer hitch kit. To obtain a trailer hitch kit, see your dealer.

Have a qualified mechanic install your trailer brake controller following the trailer brake controller manufacturer's instructions. Failure to properly install the trailer brake controller may increase the distance it takes for you to stop your vehicle when towing a trailer.

Use this illustration to identify each terminal in the trailer brake controller connector.

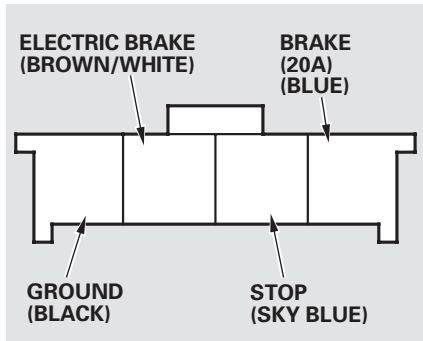

Safety Chains
Always use safety chains when you tow a trailer. Make sure the chains are secured to the trailer and hitch, and that they cross under the tongue and can catch the trailer if it becomes unhitched. Leave enough slack to allow the trailer to turn corners easily, but do not let the chains drag on the ground.

Sway Control
This device is recommended if your trailer tends to sway. Your trailer dealer or rental agency can tell you what kind of sway control you need and how to install it.

Trailer Mirrors
Many states and provinces require special exterior mirrors when towing a trailer. Even if they don't, you should install special mirrors if you cannot clearly see behind you, or if the trailer creates a blind spot.

Spare Tires
When towing a trailer, we recommend that you carry a full-size spare wheel and tire for your vehicle and trailer. See page 353 for proper tire size, page 366 for how to store a full size wheel and tire, and page 361 for information on changing a flat tire.

Remember to unhitch the trailer before changing a flat. Ask your trailer sales or rental agency where and how to store the trailer's spare tire.

Towing a Trailer

Trailer Lights

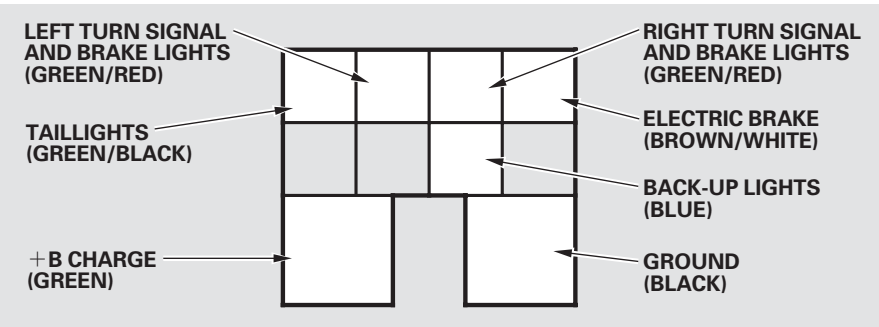

Trailer lights and equipment must comply with federal, state, province/territory, and local regulations. Check trailer light requirements for the areas where you plan to tow, and use only equipment designed for your vehicle.

Except RT models
Your vehicle is equipped with a trailer lighting connector.

On RT models
Your vehicle is equipped with a connector to install an optional trailer lighting connector that mates with your vehicle. You can get this optional connector from your dealer.

Refer to the above illustration for wiring information.

We recommend that you have your dealer install a Honda wiring harness and converter. This harness has been designed for your vehicle.

Since lighting and wiring vary with trailer type and brand, you should also have a qualified mechanic install a suitable connector between the vehicle and the trailer.

Towing Equipment

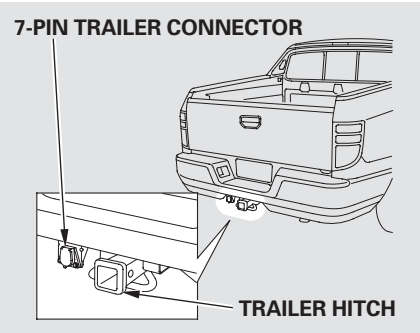

Your vehicle has a class 3 trailer hitch as standard equipment.

Also see page 299 for trailer-related information.

Connecting the Trailer Connectors
Except RT models

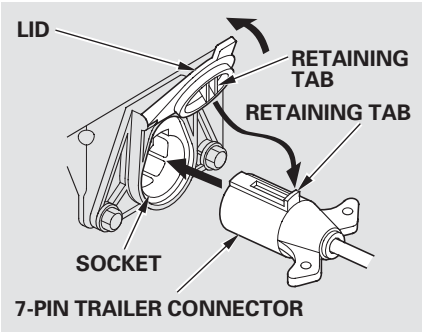

The 7-pin trailer connector is needed for the trailer lights. To connect the connector:

1. Make sure the connector and the socket are free of dirt, moisture, or other foreign material.

2. Open the socket lid by pulling it up.

3. Insert the connector securely into the socket.

4. Hook the retaining tab on the inner side of the lid against the retaining tab of the connector to prevent disconnection during operation.

CONTINUED

Towing a Trailer

Trailer Connector Sockets
Except RT models

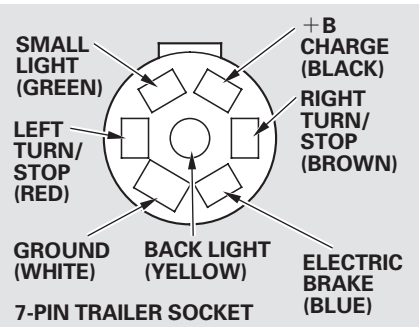

Refer to the above illustrations for wiring information.

Trailer Jumper Harness
Except RT models

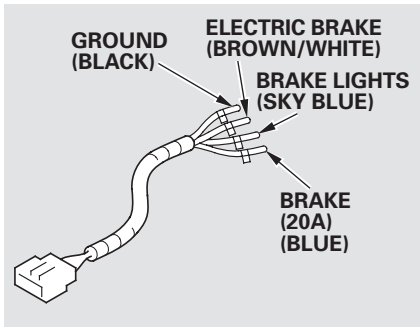

The trailer jumper harness is used to install the controller for the electric trailer brakes. For more information, see ***Trailer Brakes*** on page 298 .

Trailer Brake Fuse
Insert the trailer brake fuse into the secondary under-hood fuse box (see page 381).

Pre-Tow Checklist
When preparing to tow, and before driving away, be sure to check the following:

- The vehicle has been properly serviced, and the tires, brakes, suspension, cooling system, and lights are in good operating condition.
- The trailer has been properly serviced and is in good condition.
- All weights and loads are within limits.
- The hitch, safety chains, and any other attachments are secure.
- All items on and in the trailer are properly secured and cannot shift while you drive.
- The lights and brakes on your vehicle and the trailer are working properly.
- Your vehicle tires and spare are in good condition and properly inflated.
- The trailer tires and spare are in good condition and inflated as recommended by the trailer maker.
- Towing performance can be affected by high altitude, high temperature, or when climbing steep grades. Therefore, premium fuel (premium unleaded gasoline with pump octane number of 91 or higher) is recommended when towing more than 3,500 lbs (1,590 kg).

Driving Safely With a Trailer
The added weight, length, and height of a trailer will affect your vehicle's handling and performance, so driving with a trailer requires some special driving skills and techniques.

For your safety and the safety of others, take time to practice driving maneuvers before heading for the open road, and follow the guidelines on the following page.

CONTINUED

Towing a Trailer

Towing Speeds and Gears
Drive slower than normal in all driving situations, and obey posted speed limits for vehicles with trailers. When towing a fixed-sided trailer (e.g., camper), do not exceed 55 mph (88 km/h). At higher speeds, the trailer may sway or affect vehicle handling.

When towing a trailer on level roads under normal driving conditions, do not use D3. This will increase the automatic transmission fluid temperature and may cause overheating.

If the automatic transmission fluid temperature increases and exceeds the specified limit, the A/T temperature indicator comes on (see page 69).
On models with navigation system
You will also see an "A/T TEMP HIGH" message on the multi-information display (see page 91).

With heavy cargo on the pickup bed, your vehicle has a higher center of gravity. Drive slowly and cautiously, and allow more time and distance for braking. Loading heavy cargo could affect your vehicle's handling and performance.

Making Turns and Braking
Make turns more slowly and wider than normal. The trailer tracks a smaller arc than your vehicle, and it can hit or run over something the vehicle misses.

Allow more time and distance for braking. Do not brake or turn suddenly as this could cause the trailer to jackknife or turn over.

Driving on Hills
When climbing hills, closely watch your temperature gauge. If it nears the red (Hot) mark, turn the air conditioning off, reduce speed and, if necessary, pull to the side of the road to let the engine cool.

If you must stop when facing uphill, use the foot brake or parking brake. Do not try to hold the vehicle in place by pressing on the accelerator, as this can cause the automatic transmission to overheat.

When driving down hills, reduce your speed, and use D3. Do not "ride" the brakes. **Remember, it takes longer to slow down and stop when towing a trailer.**

Handling Crosswinds and Buffeting
Crosswinds and air turbulence caused by passing trucks can disrupt your steering and cause the trailer to sway. When being passed by a large vehicle, keep a constant speed, and steer straight ahead. Do not try to make quick steering or braking corrections.

Backing Up
Always drive slowly and have someone guide you when backing up. Grip the *bottom* of the steering wheel, then turn the wheel to the left to get the trailer to move to the left. Turn the wheel to the right to move the trailer to the right.

Parking
When parking on level ground, follow all normal precautions (see page 286) including putting the transmission in Park, and firmly setting the parking brake.

Do not park on an incline unless it is unavoidable. If you must park on an incline, follow the steps below to help prevent the vehicle and trailer from rolling and possibly injuring someone.

1. Turn the front wheels toward the curb on a downhill, and away from the curb on an uphill.

2. With the foot brake fully pressed, have someone place wheel chocks on the downhill side of the vehicle and trailer wheels.

3. Firmly apply the parking brake before you put the transmission in Park. This keeps the vehicle from putting pressure on the parking mechanism in the transmission. It also makes it easier to move the shift lever out of Park when you want to drive away.

Retrieving a Boat
If the vehicle's tires slip when retrieving a boat from the water, shift to first gear, and turn on VTM-4 lock (see page 276). Disengage VTM-4 lock as soon as the boat is out of the water to prevent damage to the VTM-4 system.

Towing Your Vehicle
Your vehicle is not designed to be towed behind a motor home. If your vehicle needs to be towed in an emergency, see page 383 .

Off-Highway Driving Guidelines

General Information
Your vehicle has been designed primarily for use on pavement. But its higher ground clearance and four-wheel drive VTM-4 system allow you to occasionally travel on unpaved roads and surfaces. Your vehicle is not designed for trailblazing, mountain climbing, or other challenging off-road activities.

If you decide to drive on unpaved roads, you will find that it requires somewhat different driving skills. Your vehicle will also handle somewhat differently than it does on pavement. Be sure to pay extra attention to the precautions and tips in this section, and get acquainted with your vehicle before leaving the pavement.

⚠ WARNING

Improperly operating this vehicle on or off-pavement can cause a crash or rollover in which you and your passengers could be seriously injured or killed.

- Follow all instructions and guidelines in this owner's manual.
- Keep your speed low, and don't drive faster than conditions permit.

Off-Highway Driving Guidelines

Important Safety Precautions
To avoid loss of control or rollover, be sure to follow all precautions and recommendations.

- Be sure to store cargo properly and do not exceed your cargo load limits (see page 260 and 293).
- Be aware that a heavy load can reduce ground clearance and your ability to clear obstacles.
- Whenever you drive, make sure you and your passengers always wear seat belts.
- Keep your speed low, and never go faster than the conditions allow.
- It's up to you to continually assess the situation and drive within the limits.

Remember
The route presents limits (too steep or bumpy roads). You have limits (driving skill and comfort). And your vehicle has limits (traction, stability, and power).

Driving off-highway can be hazardous if you fail to recognize limits and take the proper precautions.

Check Out Your Vehicle
Before you leave the pavement, be sure to do all scheduled maintenance and service, and inspect your vehicle for any problems. Pay special attention to the condition of the tires, and check the tire pressures.

After you return to the pavement, carefully inspect your vehicle to make sure there is no damage that could make driving it unsafe. Recheck the condition of the tires and the tire pressures.

Off-Highway Driving Guidelines

Accelerating and Braking
For better traction on all surfaces, accelerate slowly and gradually build up speed. If you try to start too fast on wet soil, mud, snow, or ice, you might not have enough traction to get underway, and you may dig yourself a hole. Starting with the shift lever in second (2) gear will help you have a smoother start on snow or ice.

Keep in mind that you will usually need more time and distance to brake to a stop on unpaved surfaces. Avoid hard braking. Do not "pump" the brakes; let the anti-lock braking system pump them for you.

Avoiding Obstacles
Your vehicle is not equipped with undercarriage guards to protect key components, so take care to avoid rocks, tree stumps, and other obstacles in your path.

Because your vehicle has a higher center of gravity than a conventional passenger vehicle, driving a wheel over a tall object, or allowing a wheel to drop into a deep hole, can cause your vehicle to tip or roll over.

Driving on Slopes
If you can't clearly see all conditions or obstacles on a slope, walk the slope before you drive on it. If you have any doubt whether or not you can safely drive on the slope, don't do it. Find another route.

If you are driving up a hill and find that you cannot continue, *do not try to turn around*. Your vehicle could roll over. Slowly back down the hill, following the same route you took up the hill.

Crossing a Stream
Before driving through water, stop, get out if necessary, and make sure that:

- The water is not deep enough to cover your wheel hubs, axles, or exhaust pipe. You could stall and not be able to restart your engine. The water can also damage important vehicle components.
- The banks are sloped so you can drive out.
- The water is not flowing too fast. Deep rushing water can sweep you downstream. Even very shallow rushing water can wash the ground from under your tires and cause you to lose traction and possibly roll over.
- The banks and surface under the water provide good traction. The water may hide hazards such as rocks, holes, or mud.

If you decide it is safe to drive through water, choose a suitable speed, and proceed without shifting, changing speeds, stopping, or shutting off the engine.

Do not try to cross water at high speeds, as this may cause severe damage to the cooling system or result in loss of control.

After driving through water, test your brakes. If they got wet, gently "pump" them while driving slowly until they operate normally.

If the water is deeper than the wheel hubs, some additional service may be required. This service is not covered by your warranties.

If You Get Stuck
If you get stuck, and cannot get unstuck with the VTM-4 system, engage the VTM-4 Lock (see page 276), and carefully try to go in the direction (forward or reverse) that you think will get you unstuck. Do not spin the tires at high speeds. It will not help you get out and may cause damage to the transmission or VTM-4 system.

If you are still unable to free yourself, your vehicle is equipped with front and rear tow hooks designed for this purpose (see page 383).

CONTINUED

Off-Highway Driving Guidelines

Use a nylon strap to attach your vehicle to the recovery vehicle, and carefully take out the slack in the strap. Once the strap is tight, the recovery vehicle should apply force. Remember that the recovery vehicle needs good traction to avoid becoming stuck, too.

You should never use a jack to try to get unstuck. Your vehicle could easily slip off the jack and hurt you or someone else.

Towing a Trailer Off-Road
You may safely tow a trailer off-road if you follow these guidelines:

- Do not exceed the trailer weight or tongue limits (see page 295).
- Stay on smooth, level dirt roads, and avoid driving in hilly terrain.
- Allow extra room for starting, stopping, and turning.
- Slow down if you encounter bumps or other obstacles.

This section covers the more common problems that motorists experience with their vehicles. It gives you information about how to safely evaluate the problem and what to do to correct it. If the problem has stranded you on the side of the road, you may be able to get going again. If not, you will also find instructions on getting your vehicle towed.

Compact Spare Tire..... 360
Changing a Flat Tire 361
If the Engine Won't Start..... 369
Jump Starting 370
If the Engine Overheats 372
Low Oil Pressure Indicator 374
Charging System Indicator..... 374
Malfunction Indicator Lamp 375
Brake System Indicator 376
Fuses 378
Fuse Locations..... 381
Emergency Towing 383
If Your Vehicle Gets Stuck..... 383

Compact Spare Tire

Use the compact spare tire as a temporary replacement only. Get your regular tire repaired or replaced, and put it back on your vehicle as soon as you can.

Check the air pressure of the compact spare tire every time you check the other tires. It should be inflated to:
60 psi (420 kPa , 4.2 kgf/cm²)

Follow these precautions:

- Never exceed 50 mph (80 km/h).
- This tire gives a harsher ride and less traction on some road surfaces. Use greater caution while driving.
- Do not mount snow chains on a compact spare.
- Do not use your compact spare tire on another vehicle unless it is the same make and model.

On models without navigation system
The low tire pressure indicator comes on and stays on after you replace the flat tire with the compact spare tire. After several miles (kilometers) driving with the compact spare tire, the TPMS indicator comes on and the low tire pressure indicator goes off.

On models with navigation system
After the flat tire is replaced with the spare tire, the low tire pressure/ TPMS indicator stays on. After several miles (kilometers) driving with the spare, this indicator begins to flash, then stays on again. You will also see a “CHECK TPMS SYSTEM” message on the multi-information display (see page 284).

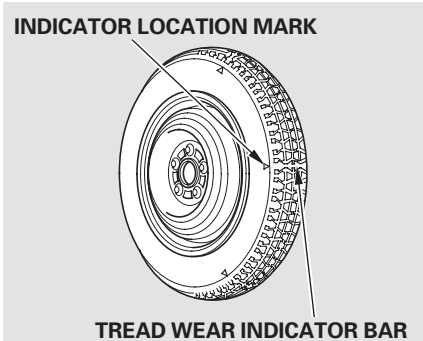

Replace the tire when you can see the tread wear indicator bars. The replacement should be the same size and design tire, mounted on the same wheel. The spare tire is not designed to be mounted on a regular wheel, and the spare wheel is not designed for mounting a regular tire.

If you have a flat tire while driving, stop in a safe place to change it. Drive slowly along the shoulder until you get to an exit or an area to stop that is far away from the traffic lanes.

⚠ WARNING

The vehicle can easily roll off the jack, seriously injuring anyone underneath.

Follow the directions for changing a tire exactly, and never get under the vehicle when it is supported only by the jack.

If you tow a trailer frequently, we recommend that you use a regular tire as a spare. You can store the regular size spare tire on the tire tray, but store the tool kit at the side of the In-Bed Trunk (see page 367), and secure it.

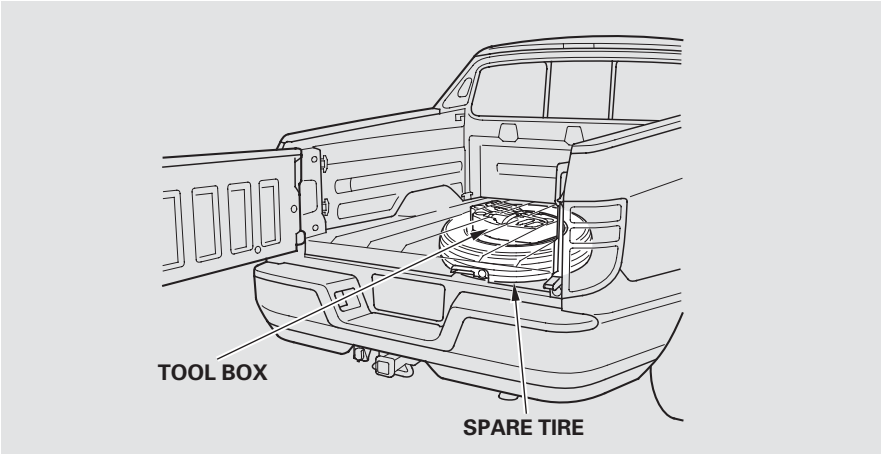

1. Park the vehicle on firm, level, and non-slippery ground. Put the transmission in Park. Apply the parking brake.
   If you are towing a trailer, unhitch it.
2. Turn on the hazard warning lights, and turn the ignition switch to the LOCK (0) position. Have all passengers get out of the vehicle while you change the tire.

CONTINUED

Changing a Flat Tire

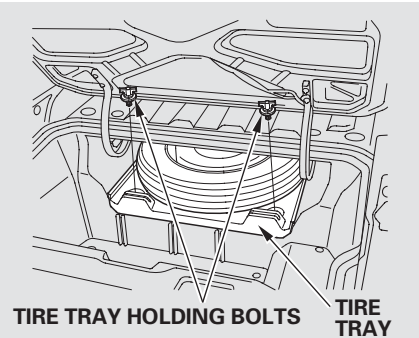

3. Open the In-Bed Trunk.

4. Remove the two tire tray holding bolts.

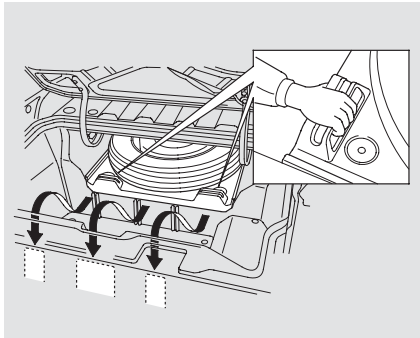

5. Pull out the tire tray with the handle, and hook the rear of the tire tray to the guides on the back edge of the In-Bed Trunk.

If you are using a cargo net or a cargo cover in the In-Bed Trunk, remove it before pulling out the tire tray.

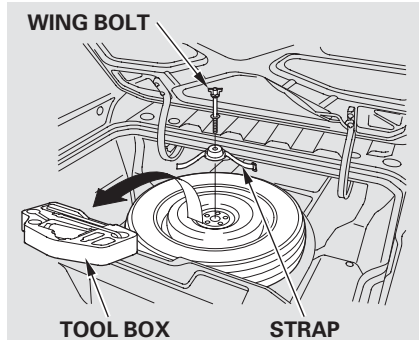

6. Unfasten the strap to remove the tool box, and unscrew the wing bolt.

7. Take out the compact spare tire.

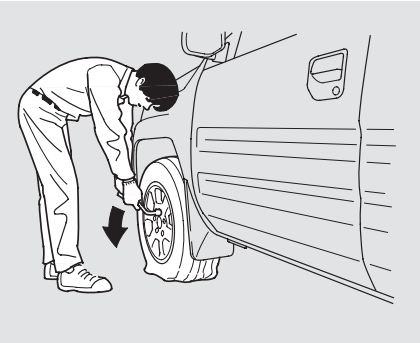

8. Loosen each wheel nut 1/2 turn with the wheel nut wrench.

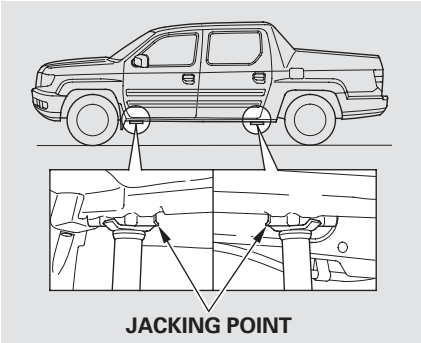

9. Place the jack under the jacking point nearest the tire you need to change.

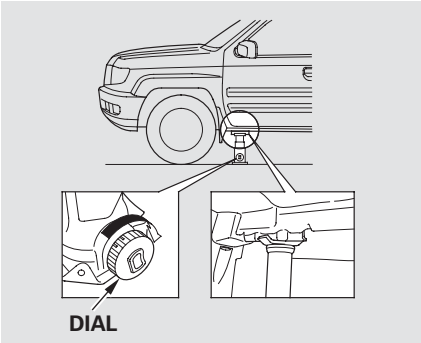

10. Turn the dial at the bottom of the jack clockwise until the top of the jack contacts the jacking point. Make sure the jacking point tab is resting in the jack notch.

CONTINUED

Changing a Flat Tire

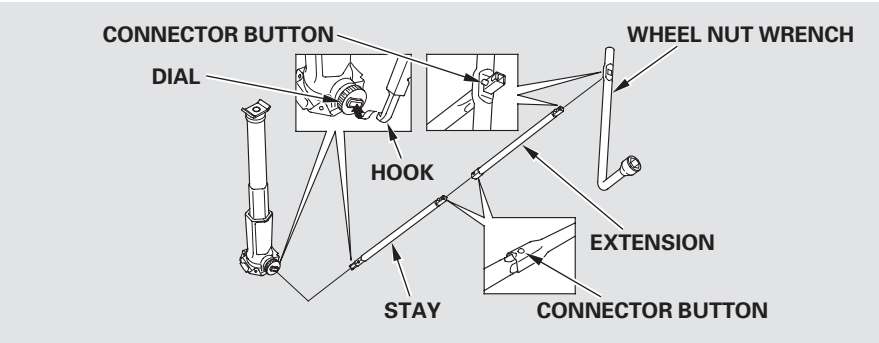

11. Attach the stay to the extension, then attach the wheel nut wrench to the end of the extension.

    Make sure the stay, the extension, and the wheel nut wrench are securely attached.

12. Insert the hook at the end of the stay into the opening on the dial at the bottom of the jack.

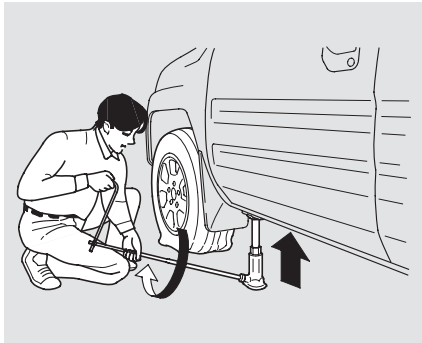

13. Turn the jack dial (wheel nut wrench) clockwise as shown to raise the vehicle until the flat tire is off the ground.

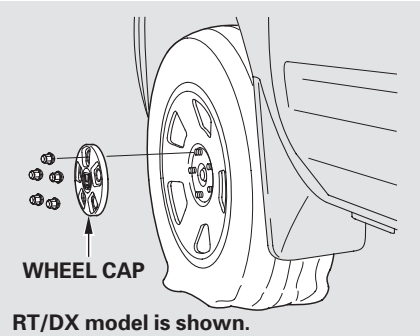

RT/DX model is shown.

14. Remove the wheel nuts and the wheel cap (on RT and Canadian DX models) then remove the flat tire. Handle the wheel nuts carefully; they may be hot from driving. Place the flat tire on the ground with the outside surface facing up.

On RT and Canadian DX models
The wheel cap cannot be removed without first removing the wheel nuts.

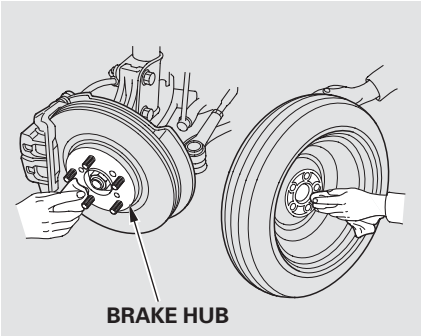

15. Before mounting the spare tire, wipe any dirt off the mounting surface of the wheel and hub with a clean cloth. Wipe the hub carefully; it may be hot from driving.

16. Put on the spare tire. Put the wheel nuts back on finger-tight, then tighten them in a crisscross pattern with the wheel nut wrench until the wheel is firmly against the hub. Do not try to tighten the wheel nuts fully.

17. Lower the vehicle to the ground, and remove the jack.

CONTINUED

Changing a Flat Tire

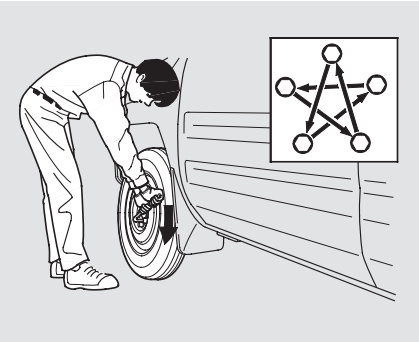

18. Tighten the wheel nuts securely in the same crisscross pattern. Have the wheel nut torque checked at the nearest automotive service facility.
    Tighten the wheel nuts to:
    94 lbf·ft (127 N·m , 13 kgf·m)

19. *On RTS, RTL, and Canadian VP, EX-L models*
    Remove the center cap from the flat tire.

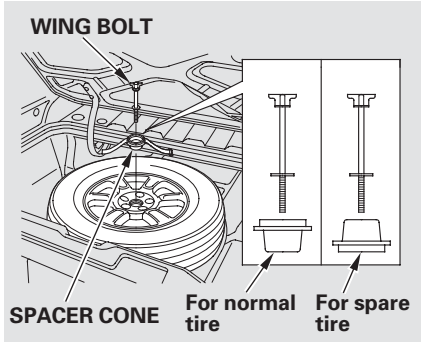

20. Place the flat tire face up on the tire tray.

21. Remove the spacer cone from the wing bolt, turn it over, and put it back on the bolt.

22. Secure the flat tire by screwing the wing bolt back into its hole.

23. Release the tire tray and slide it back in place.

24. Tighten the tire tray holding bolts securely.

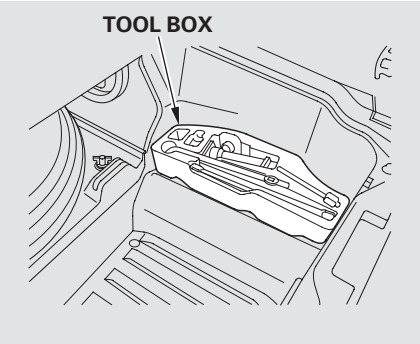

25. Store the jack and the tools in the tool box.

26. When storing the flat tire, place the tool box at the right side of the In-Bed Trunk as shown.

⚠ WARNING

Loose items can be thrown out of the vehicle in a crash and could seriously injure the occupants.

Store the wheel, jack, and tools securely before driving.

27. Store the wheel cap or center cap in the In-Bed Trunk. Make sure it does not get scratched or damaged.

28. Refer to **Changing a Tire with TPMS** (see page 280 or 285).

Changing a Flat Tire

Securing a Spare Tire on the Pickup Bed

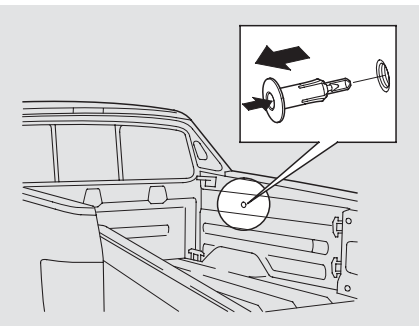

As a temporary mounting location, you can secure a spare tire on the pickup bed, if needed.

1. Remove the clip by pushing the center of its top.

2. Remove the spare tire from the tire tray (see page 362).

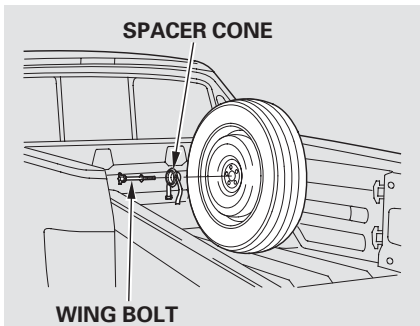

3. Place the spare tire on the pickup bed as shown.

4. Place the spacer cone in the wheel hub, and secure the spare tire to the pickup bed with the wing bolt.

5. Store or secure the tool box.

If you remove the spare tire from the pickup bed, reinstall the clip back into its hole.

Diagnosing why the engine won't start falls into two areas, depending on what you hear when you turn the ignition switch to the START (III) position:

- You hear nothing, or almost nothing. The engine's starter motor does not operate at all, or operates very slowly.
- You can hear the starter motor operating normally, or the starter motor sounds like it is spinning faster than normal, but the engine does not start up and run.

Nothing Happens or the Starter Motor Operates Very Slowly

When you turn the ignition switch to the START (III) position, you do not hear the normal noise of the engine trying to start. You may hear a clicking sound, a series of clicks, or nothing at all.

Check these things:

- Check the transmission interlock. The transmission must be in Park or neutral or the starter will not operate.
- Turn the ignition switch to the ON (II) position. Turn on the headlights, and check their brightness. If the headlights are very dim or do not come on at all, the battery is discharged. See **Jump Starting** on page 370 .
- Turn the ignition switch to the START (III) position. If the headlights do not dim, check the condition of the fuses. If the fuses are OK, there is probably something wrong with the electrical circuit for the ignition switch or starter motor. You will need a qualified technician to determine the problem. See **Emergency Towing** on page 383 .

If the headlights dim noticeably or go out when you try to start the engine, either the battery is discharged or the connections are corroded. Check the condition of the battery and terminal connections (see page 356). You can then try jump starting the vehicle from a booster battery (see page 370).

The Starter Operates Normally

In this case, the starter motor's speed sounds normal, or even faster than normal, when you turn the ignition switch to the START (III) position, but the engine does not run.

- Are you using a properly coded key? An improperly coded key will cause the immobilizer system indicator in the instrument panel to blink rapidly (see page 101).

CONTINUED

If the Engine Won't Start, Jump Starting

- Are you using the proper starting procedure? Refer to **Starting the Engine** on page 270 .
- Do you have fuel? Check the fuel gauge; the low fuel indicator may not be working.
- There may be an electrical problem, such as no power to the fuel pump. Check all the fuses (see page 378).

If you find nothing wrong, you will need a qualified technician to find the problem. See **Emergency Towing** on page 383 .

Jump Starting
Although this seems like a simple procedure, you should take several precautions.

⚠ WARNING

A battery can explode if you do not follow the correct procedure, seriously injuring anyone nearby.

Keep all sparks, open flames, and smoking materials away from the battery.

You cannot start your vehicle by pushing or pulling it.

To Jump Start Your Vehicle:

1. Open the hood, and check the physical condition of the battery. In very cold weather, check the condition of the electrolyte. If it seems slushy or frozen, do not try jump starting until it thaws.

NOTICE

If a battery sits in extreme cold, the electrolyte inside can freeze. Attempting to jump start with a frozen battery can cause it to rupture.

2. Turn off all electrical accessories: heater, A/C, climate control, audio system, lights, etc. Put the transmission in Park, and set the parking brake.

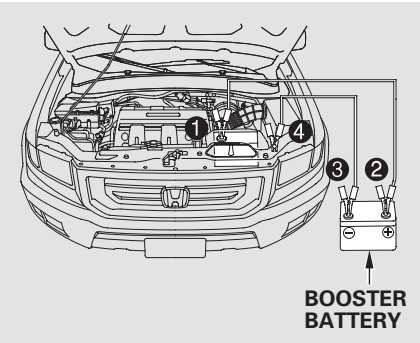

The numbers in the illustration show you the order to connect the jumper cables.

3. Connect one jumper cable to the positive (+) terminal on your vehicle's battery. Connect the other end to the positive (+) terminal on the booster battery.

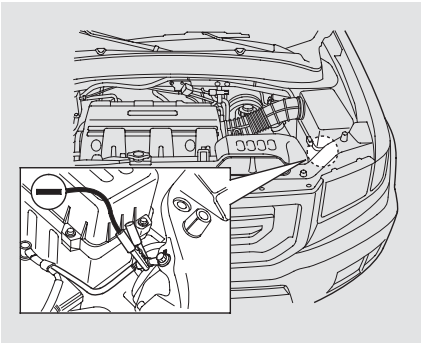

4. Connect the second jumper cable to the negative (−) terminal on the booster battery. Connect the other end to the grounding strap as shown. Do not connect this jumper cable to any other part of the engine.

5. If the booster battery is in another vehicle, have an assistant start that vehicle and run it at a fast idle.

6. Start the vehicle. If the starter motor still operates slowly, check that the jumper cables have good metal-to-metal contact.

7. Once your vehicle is running, disconnect the negative cable from your vehicle, then from the booster battery. Disconnect the positive cable from your vehicle, then from the booster battery.

Keep the ends of the jumper cables away from each other and any metal on the vehicle until everything is disconnected. Otherwise, you may cause an electrical short.

If the Engine Overheats

The pointer of your vehicle's temperature gauge should stay in the midrange under most conditions. If it climbs to the red mark, you should determine the reason (hot day, driving up a steep hill, etc.).

If the vehicle overheats, you should take immediate action. The only indication may be the temperature gauge climbing to or above the red mark. Or you may see steam or spray coming from under the hood.

NOTICE

Driving with the temperature gauge pointer at the red mark can cause serious damage to the engine.

⚠ WARNING

Steam and spray from an overheated engine can seriously scald you.

Do not open the hood if steam is coming out.

1. Safely pull to the side of the road. Put the transmission in Park, and set the parking brake. Turn off all the accessories, and turn on the hazard warning lights.

2. If you see steam and/or spray coming from under the hood, turn off the engine. Wait until you see no more signs of steam or spray, then open the hood.

3. If you do not see steam or spray, leave the engine running and watch the temperature gauge. If the high heat is due to overloading, the engine should start to cool down almost immediately. If it does, wait until the temperature gauge comes down to the midpoint, then continue driving.

4. If the temperature gauge stays at the red mark, turn off the engine.

5. Look for any obvious coolant leaks, such as a split radiator hose. Everything is still extremely hot, so use caution. If you find a leak, it must be repaired before you continue driving (see **Emergency Towing** on page 383).

6. If you do not find an obvious leak, check the coolant level in the radiator reserve tank. Add coolant if the level is below the MIN mark.

7. If there was no coolant in the reserve tank, you may need to add coolant to the radiator. Let the engine cool down until the pointer reaches the middle of the temperature gauge, or lower, before checking the radiator.

⚠ WARNING

Removing the radiator cap while the engine is hot can cause the coolant to spray out, seriously scalding you.

Always let the engine and radiator cool down before removing the radiator cap.

8. Using gloves or a large heavy cloth, turn the radiator cap counterclockwise, without pushing down, to the first stop. After the pressure releases, push down on the cap, and turn it until it comes off.

9. Start the engine, and set the temperature to maximum heat (climate control to AUTO at " Hi ”). Add coolant to the radiator up to the base of the filler neck. If you do not have the proper coolant mixture available, you can add plain water. Remember to have the cooling system drained and refilled with the proper mixture as soon as you can.

10. Put the radiator cap back on tightly. Run the engine, and check the temperature gauge. If it goes back to the red mark, the engine needs repair (see **Emergency Towing** on page 383).

11. If the temperature stays normal, check the coolant level in the radiator reserve tank. If it has gone down, add coolant to the MAX mark. Put the cap back on tightly.

Low Oil Pressure Indicator, Charging System Indicator

Low Oil Pressure Indicator

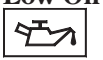

This indicator should never come on when the engine is running. If it starts flashing or stays on, the oil pressure has dropped very low or lost pressure. Serious engine damage is possible, and you should take immediate action.

On models with navigation system
You will also see a "CHECK ENGINE OIL LEVEL" message on the multi-information display when this indicator comes on.

NOTICE

Running the engine with low oil pressure can cause serious mechanical damage almost immediately. Turn off the engine as soon as you can safely get the vehicle stopped.

1. Safely pull off the road, and shut off the engine. Turn on the hazard warning indicators.

2. Let the vehicle sit for a minute. Open the hood, and check the oil level (see page 253). An engine very low on oil can lose pressure during cornering and other driving maneuvers.

3. If necessary, add oil to bring the level back to the full mark on the dipstick (see page 326).

4. Start the engine, and watch the oil pressure indicator. If it does not go out within 10 seconds, turn off the engine. There is a mechanical problem that needs to be repaired before you can continue driving (see **Emergency Towing** on page 383).

Charging System Indicator

If the charging system indicator comes on brightly when the engine is running, the battery is not being charged.

On models with navigation system
You will also see a "CHECK CHARGING SYSTEM" message on the multi-information display (see page 90).

Immediately turn off all electrical accessories. Try not to use other electrically operated controls such as the power windows. Keep the engine running; starting the engine will discharge the battery rapidly.

Go to a service station or garage where you can get technical assistance.

Malfunction Indicator Lamp

If this indicator comes on while driving, it means one of the engine's emissions control systems may have a problem. Even though you may feel no difference in your vehicle's performance, it can reduce your fuel economy and cause increased emissions. Continued operation may cause serious damage.

If you have recently refueled your vehicle, the indicator coming on could be due to a loose or missing fuel fill cap. Tighten the cap until it clicks at least once. Tightening the cap will not turn the indicator off immediately; it can take several days of normal driving.

On models without navigation system
You will also see a "CHECK FUEL CAP" message on the information display.

On models with navigation system
You will also see a "TIGHTEN FUEL CAP" message on the multi-information display.

If the indicator comes on repeatedly, even though it may turn off as you continue driving, have your vehicle checked by the dealer as soon as possible.

NOTICE

If you keep driving with the malfunction indicator lamp on, you can damage your vehicle's emissions controls and engine. Those repairs may not be covered by your vehicle's warranties.

The indicator may also come on with the "D" indicator.

On models with navigation system
You will also see a "CHECK EMISSION SYSTEM" message on the multi-information display (see page 90).

Malfunction Indicator Lamp, Brake System Indicator

Readiness Codes
Your vehicle has certain “readiness codes” that are part of the on-board diagnostics for the emissions systems. In some states, part of the emissions testing is to make sure these codes are set. If they are not set, the test cannot be completed.

If the battery in your vehicle has been disconnected or gone dead, these codes may be erased. It can take several days of driving under various conditions to set the codes again.

To check if they are set, turn the ignition switch to the ON (II) position, without starting the engine. The malfunction indicator lamp will come on for 20 seconds. If it then goes off, the readiness codes are set. If it blinks five times, the readiness codes are not set. If possible, do not take your vehicle for an emissions test until the readiness codes are set. Refer to **Emissions Testing** for more information (see page 400).

Brake System Indicator

U.S. BRAKE Canada

The brake system indicator normally comes on when you turn the ignition switch to the ON (II) position, and as a reminder to check the parking brake. It will stay on if you do not fully release the parking brake.

If the brake system indicator comes on while driving, the brake fluid level is probably low. Press lightly on the brake pedal to see if it feels normal. If it does, check the brake fluid level the next time you stop at a service station (see page 334).

Brake System Indicator

On models with navigation system
You will also see a "BRAKE FLUID LOW" message on the multi-information display (see page 90).

If the fluid level is low, take your vehicle to a dealer, and have the brake system inspected for leaks or worn brake pads.

However, if the brake pedal does not feel normal, you should take immediate action. A problem in one part of the system's dual circuit design will still give you braking at two wheels. You will feel the brake pedal go down much farther before the vehicle begins to slow down, and you will have to press harder on the pedal.

On models with navigation system
You will also see a "CHECK BRAKE SYSTEM" message on the multi-information display (see page 90).

Slow down by shifting to a lower gear, and pull to the side of the road when it is safe. Because of the long distance needed to stop, it is hazardous to drive the vehicle. You should have it towed, and repaired as soon as possible (see **Emergency Towing** on page 383).

If you must drive the vehicle a short distance in this condition, drive slowly and carefully.

If the ABS indicator and the VSA system indicator come on with the brake system indicator, have your vehicle inspected by your dealer immediately.

Fuses

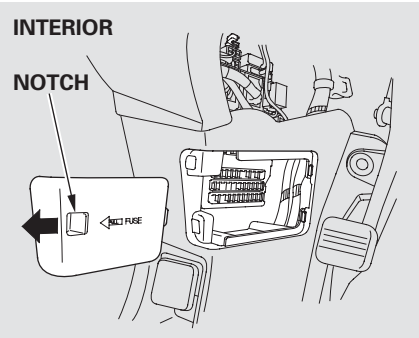

The vehicle's fuses are contained in three fuse boxes.

The interior fuse box is on the driver's lower left side. To remove the fuse box lid, put your finger in the notch on the lid, and pull it outward slightly, then pull it toward you and take it out of its hinges.

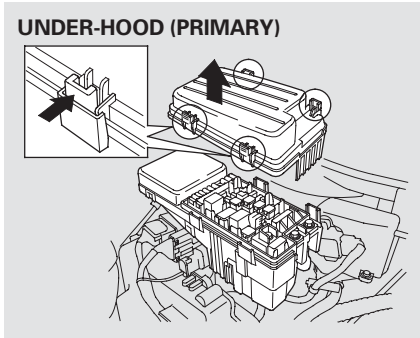

The primary under-hood fuse box is on the passenger's side. The secondary fuse box is next to the brake fluid reservoir. To open them, push the tabs as shown.

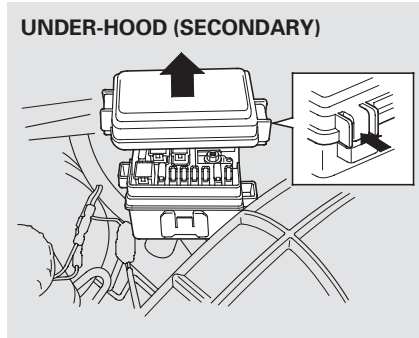

Checking and Replacing Fuses

If something electrical in your vehicle stops working, check for a blown fuse first. Determine from the chart on pages 381 and 382 , or the diagram on the fuse box lid, which fuse or fuses control that device. Check those fuses first, but check all the fuses before deciding that a blown fuse is the cause. Replace any blown fuses, and check if the device works.

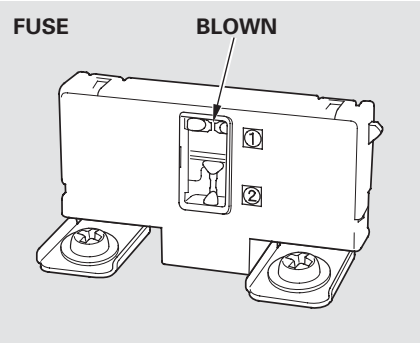

1. Turn the ignition switch to the LOCK (0) position. Make sure the headlights and all other accessories are off.

2. Remove the cover from the fuse box.

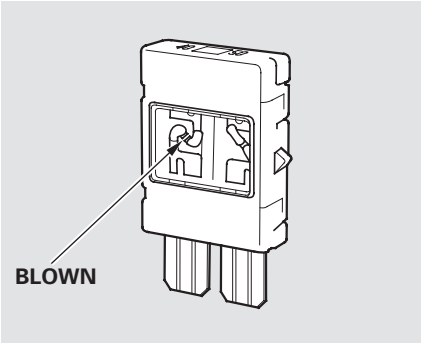

3. Check each of the large fuses in the primary under-hood fuse box by looking through the side window at the wire inside. Removing these fuses requires a Phillips-head screwdriver.

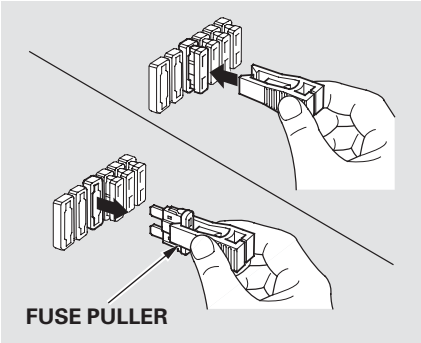

4. Check the smaller fuses in the under-hood fuse boxes and all the fuses in the interior fuse box by pulling out each one with the fuse puller provided in the primary under-hood fuse box.

CONTINUED

Fuses

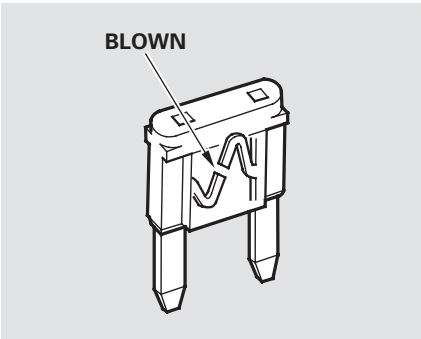

5. Look for a blown wire inside the fuse. If it is blown, replace the fuse with one of the spare fuses of the same rating or lower.

If you cannot drive the vehicle without fixing the problem, and you do not have a spare fuse, take a fuse of the same rating or a lower rating from one of the other circuits. Make sure you can do without that circuit temporarily (such as the accessory power socket or radio).

If you replace the blown fuse with a spare fuse that has a lower rating, it might blow out again. This does not indicate anything wrong. Replace the fuse with one of the correct rating as soon as you can.

NOTICE

Replacing a fuse with one that has a higher rating greatly increases the chances of damaging the electrical system. If you do not have a replacement fuse with the proper rating for the circuit, install one with a lower rating.

6. If the replacement fuse of the same rating blows in a short time, there is probably a serious electrical problem in your vehicle. Leave the blown fuse in that circuit and have your vehicle checked by a qualified technician.

If the driver's power window fuse is removed, the AUTO function of the driver's window may be disabled. To reset the AUTO function, see page 128.

If the radio fuse is removed, the audio system will disable itself. The next time you turn on the radio you will see "CODE" in the frequency display. Use the preset bars to enter the code (see page 206).

Fuse Locations

PRIMARY UNDER-HOOD FUSE BOX

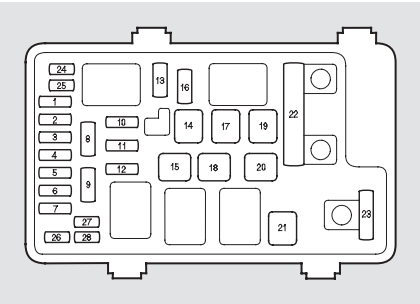

No.	Amps.	Circuits Protected
1	10 A	Left Headlight Low Beam
2	—	Not Used
3	10 A	Left Headlight High Beam
4	15 A	Small Lights
5	10 A	Right Headlight High Beam
6	10 A	Right Headlight Low Beam
7	7.5 A	Back Up
8	15 A	FI ECU (PCM)
9	15 A	DBW
10	20 A	Front Fog Light*
11	15 A	Heated Seat*
12	7.5 A	MG Clutch

No.	Amps.	Circuits Protected
13	20 A	Horn, Stop
14	20 A	Defroster
15	40 A	Back Up, ACC
16	15 A	Hazard
17	40 A	Option 1
18	20 A	AC Inverter*
19	30 A	Cooling Fan
20	30 A	Condenser Fan
21	40 A	Heater Motor
22	40 A	Seat
	120 A	Battery
23	60 A	+B IGI Main
	50 A	Power Window
24–28	—	Spare Fuses

* : If equipped

SECONDARY UNDER-HOOD FUSE BOX

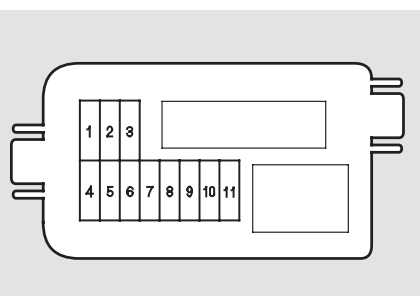

No.	Amps.	Circuits Protected
1	(7.5 A)	Back Light*
2	20 A	VSA FSR
3	40 A	VSA MTR
4	20 A	VTM-4
5	15 A	Front Accessory Sockets
6	(20 A)	Electric Brake*

No.	Amps.	Circuits Protected
7	(20 A)	Small Lights*
8	(7.5 A)	Stop/Turn Lights*
9	(20 A)	Charge*
10	7.5 A	TPMS
11	(20 A)	Moonroof*

* : If equipped

Fuse Locations

INTERIOR FUSE BOX

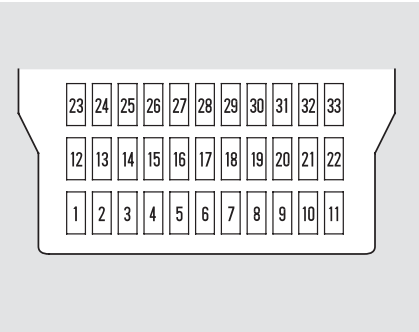

No.	Amps.	Circuits Protected
1	7.5 A	Bed Lights
2	15 A	IG Coil
3	10 A	Daytime Running Light
4	15 A	LAF
5	20 A	Radio
6	10 A	Interior Lights
7	7.5 A	Back Up
8	20 A	Door Lock
9	10 A	Rear Accessory Socket
10	7.5 A	OPDS
11	30 A	IG, Wiper
12	—	Not Used
13	(10 A)	Driver's Power Seat Lumbar*
14	(20 A)	Driver's Power Seat Sliding*
15	—	Not Used
16	(20 A)	Driver's Power Seat Reclining*
17	—	Not Used
18	15 A	IG ACG
19	15 A	IG Fuel Pump
20	7.5 A	IG Washer
21	7.5 A	IG Meter
22	10 A	IG SRS
23	7.5 A	IGP
24	20 A	Left Rear Window
25	20 A	Right Rear Window
26	20 A	Passenger's Window
27	20 A	Back Window
28	20 A	Driver's Window
29	7.5 A	VBSOL2
30	10 A	IG HAC
31	7.5 A	IG VSA/ABS
32	7.5 A	ACC
33	(7.5 A)	Not Used

* : If equipped

INTERIOR FUSE BOX UPPER AREA
Driver's Side

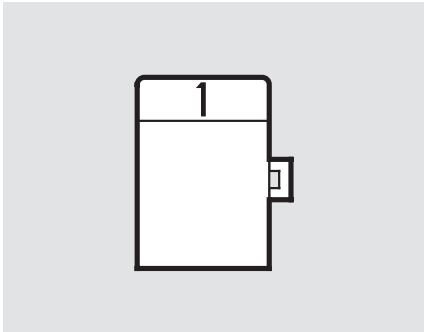

No.	Amps.	Circuits Protected
1	7.5 A	STS

If your vehicle needs to be towed, call a professional towing service or organization. Never tow your vehicle with just a rope or chain. It is very dangerous.

The only way you can safely tow your vehicle is with flat-bed equipment. The operator will load your vehicle on the back of a truck. Any other method of towing will damage the drive system. When you contact the towing agency, inform them a flat-bed is required.

NOTICE

Towing your vehicle with two tires on the ground will damage parts of the 4WD system. It should be transported on a flat-bed truck or trailer.

If Your Vehicle Gets Stuck

If your vehicle gets stuck in sand, mud, or snow, call a towing service to pull it out (see the previous column).

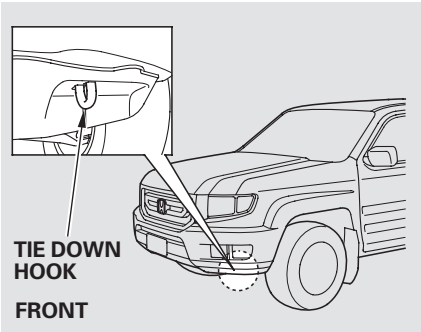

For very short distances, such as freeing the vehicle, you can use the tie down hooks on the lower of the front and rear bumpers.

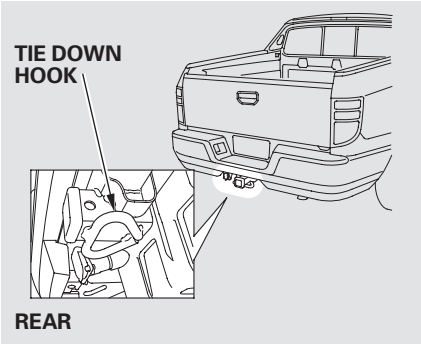

NOTICE

''Rocking'' your vehicle between forward and reverse gear or revving up the engine and allowing the wheels to spin freely at high speeds can damage the automatic transmission. Use a tow service to prevent transmission damage.

CONTINUED

If Your Vehicle Gets Stuck

NOTICE

To avoid damage to your vehicle, use the tie down hooks for straight, flat ground towing only. Do not tow at an angle. These hooks should not be used for open-road towing.

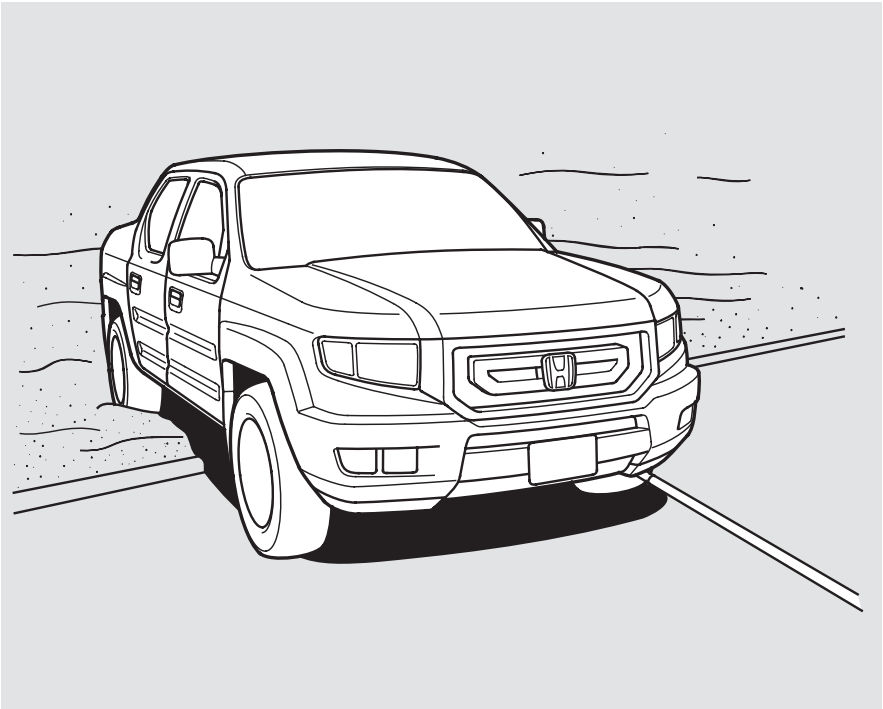

The diagrams in this section give you the dimensions and capacities of your vehicle and the locations of the identification numbers. It also includes information you should know about your vehicle's tires and emissions control systems.

Identification Numbers 386
Specifications 388
DOT Tire Quality Grading (U.S. Vehicles) 390
Uniform Tire Quality Grading 390
Treadwear 390
Traction..... 390
Temperature 391
Tire Labeling..... 392
Tire Pressure Monitoring System (TPMS) — Required Federal Explanation..... 394
Emissions Controls..... 397
The Clean Air Act..... 397
Crankcase Emissions Control System..... 397
Evaporative Emissions Control System..... 397
Onboard Refueling Vapor Recovery 397
Exhaust Emissions Controls 398
PGM-FI System 398
Ignition Timing Control System..... 398
Exhaust Gas Recirculation (EGR) System..... 398
Three Way Catalytic Converter..... 398
Replacement Parts..... 398
Three Way Catalytic Converter... 399
Emissions Testing 400

Identification Numbers

Your vehicle has several identifying numbers in various places.

The vehicle identification number (VIN) is the 17-digit number your dealer uses to register your vehicle for warranty purposes. It is also necessary for licensing and insuring your vehicle. The easiest place to find the VIN is on a plate fastened to the top of the dashboard. You can see it by looking through the windshield on the driver's side. It is also on the certification label attached to the driver's doorjamb, and is stamped on the engine compartment bulkhead. The VIN is also provided in bar code on the certification label.

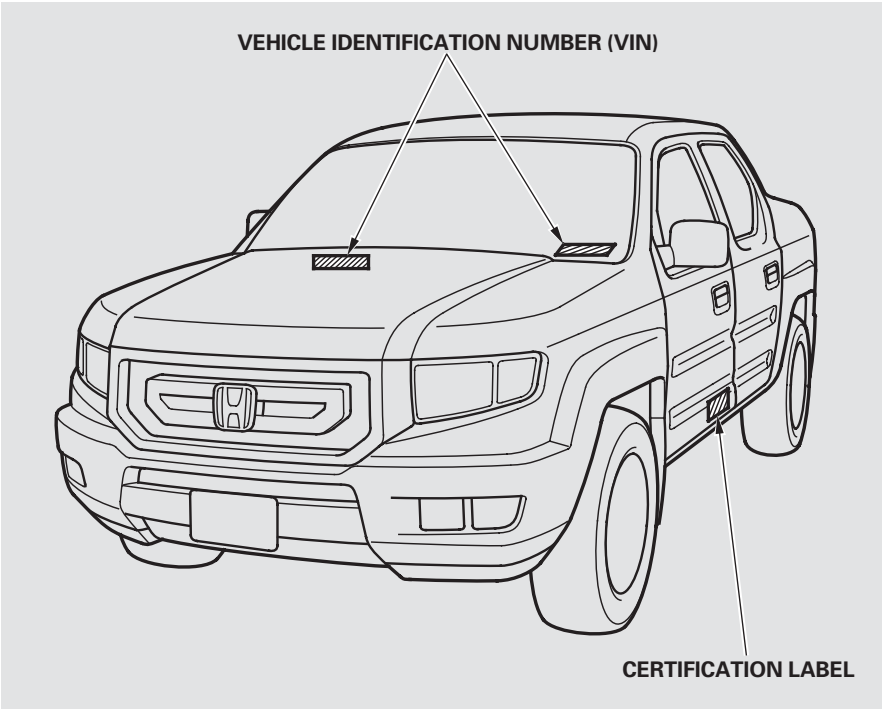

Identification Numbers

The engine number is stamped into the engine block. It is on the front.

The transmission number is on a label on top of the transmission.

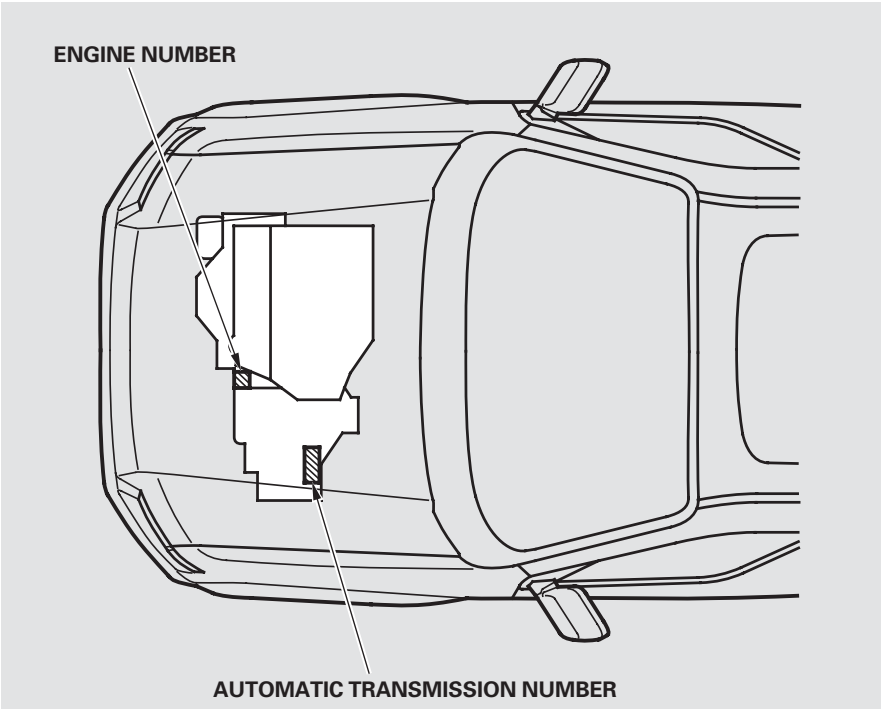

Specifications

Dimensions

Length		206.9 in (5,255 mm)
Width		77.8 in (1,976 mm)
Height		70.3 in (1,786 mm)*1
		71.2 in (1,808 mm)*2
Wheelbase		122.0 in (3,100 mm)
Track	Front	67.1 in (1,705 mm)
	Rear	66.9 in (1,700 mm)

*1 : On vehicles without moonroof
*2 : On vehicles with moonroof

Weights

Gross vehicle weight rating	See the tire information label attached to the driver's doorjamb.
Gross combined weight rating (GCWR)*1	10,088 lbs (4,575 kg)
Maximum load limit (Payload)	1,520 lbs (690 kg)*2
	1,470 lbs (670 kg)*3

*1 : The GCWR must be reduced 2 percent for every 1,000 feet (305 meters) of elevation.
*2 : On vehicles without moonroof
*3 : On vehicles with moonroof

Seating Capacities

Total	5
Front	2
Rear	3

Air Conditioning

Refrigerant type	HFC-134a (R-134a)
Charge quantity	19.4—21.2 oz (550—600 g)
Lubricant type	ND-OIL8

Capacities

Fuel tank		Approx. 22.01 US gal (83.3 ℓ)
Engine coolant	Change*1	1.64 US gal (6.2 ℓ)
	Total	2.14 US gal (8.1 ℓ)
Engine oil	Change*2 Including filter	4.5 US qt (4.3 ℓ)
	Without filter	4.2 US qt (4.0 ℓ)
	Total	5.3 US qt (5.0 ℓ)
Automatic transmission fluid	Change	3.3 US qt (3.1 ℓ)
	Total	8.5 US qt (8.0 ℓ)
Rear differential fluid	Change	2.79 US qt (2.64 ℓ)
	Total	3.01 US qt (2.85 ℓ)

*1 : Including the coolant in the reserve tank and that remaining in the engine
Reserve tank capacity:
0.16 US gal (0.6 ℓ)
*2 : Excluding the oil remaining in the engine

Specifications

Capacities

Transfer assembly fluid	Change	0.45 US qt (0.43 ℓ)
	Total	0.48 US qt (0.45 ℓ)
Windshield washer reservoir		4.8 US qt (4.5 ℓ)

Lights

Headlights	High/Low	12 V — 60/55 W (HB2)
Front turn signal/parking/ hazard lights		12 V — 28/8 W
Daytime running light		12 V — 60 W (HB3)
Fog light		12 V — 55 W (H11)
Rear turn signal/hazard lights		12 V — 21 W
Brake/Taillights		12 V — 21/5 W
Back-up lights		12 V — 18 W
License plate lights		12 V — 3 CP
High-mount brake lights		12 V — 3 CP
Individual map lights	Front	12 V — 8 W
	Rear	12 V — 5 W
Bed lights		12 V — 3 CP
Console compartment light		12 V — 1.4 W
Glove box light		12 V — 3.4 W
Vanity mirror light		12 V — 2 W
Door courtesy lights		12 V — 3.8 W

Battery

Capacity	12 V — 72 AH/20 HR
	12 V — 60 AH/5 HR

Fuses

Interior	See page 382 or the fuse label attached to the inside of the fuse box lid under the dashboard.
Under-hood	See page 381 or the fuse box lid.

Engine

Type	Water cooled 4-stroke SOHC VTEC, V6 gasoline engine
Bore x Stroke	3.50 x 3.66 in (89.0 x 93.0 mm)
Displacement	211.8 cu-in (3,471 cm^3)
Compression ratio	10.0 : 1
Spark plugs	NGK: ILZKR7B11 DENSO: SXU22HCR11

Alignment

Toe-in	Front	0.00 in (0.0 mm)
	Rear	0.00 in (0.0 mm)
Camber	Front	−0°50′
	Rear	−0°50′
Caster	Front	1°53′

Tires

Size	Front/Rear	P245/65R17 105T *1
		P245/60R18 104T *2
	Spare	T165/90R17 105M
Pressure	Front/Rear	32 psi (220 kPa , 2.2 kgf/cm^2)
	Spare	60 psi (420 kPa , 4.2 kgf/cm^2)

*1 : U.S. RT, RTS models, and Canadian DX, VP models
*2 : U.S. RTL models, and Canadian EX-L models

DOT Tire Quality Grading (U.S. Vehicles)

The tires on your vehicle meet all U.S. Federal Safety Requirements. All tires are also graded for treadwear, traction, and temperature performance according to Department of Transportation (DOT) standards. The following explains these gradings.

Uniform Tire Quality Grading
Quality grades can be found where applicable on the tire sidewall between tread shoulder and maximum section width. For example:

Treadwear 200
Traction AA
Temperature A

All passenger car tires must conform to Federal Safety Requirements in addition to these grades.

Treadwear
The treadwear grade is a comparative rating based on the wear rate of the tire when tested under controlled conditions on a specified government test course. For example, a tire graded 150 would wear one and one-half (1 1/2) times as well on the government course as a tire graded 100. The relative performance of tires depends upon the actual conditions of their use, however, and may depart significantly from the norm due to variations in driving habits, service practices and differences in road characteristics and climate.

Traction
The traction grades, from highest to lowest, are AA, A, B, and C. Those grades represent the tire's ability to stop on wet pavement as measured under controlled conditions on specified government test surfaces of asphalt and concrete. A tire marked C may have poor traction performance.

Warning: The traction grade assigned to this tire is based on straight-ahead braking traction tests, and does not include acceleration, cornering, hydroplaning, or peak traction characteristics.

DOT Tire Quality Grading (U.S. Vehicles)

Temperature
The temperature grades are A (the highest), B, and C, representing the tire's resistance to the generation of heat and its ability to dissipate heat when tested under controlled conditions on a specified indoor laboratory test wheel. Sustained high temperature can cause the material of the tire to degenerate and reduce tire life, and excessive temperature can lead to sudden tire failure. The grade C corresponds to a level of performance which all passenger car tires must meet under the Federal Motor Vehicle Safety Standard No. 109. Grades B and A represent higher levels of performance on the laboratory test wheel than the minimum required by law.

Warning: The temperature grade for this tire is established for a tire that is properly inflated and not overloaded. Excessive speed, underinflation, or excessive loading, either separately or in combination, can cause heat buildup and possible tire failure.

Tire Labeling

The tires that came on your vehicle have a number of markings. Those you should be aware of are described below.

TIRE LABELING EXAMPLE

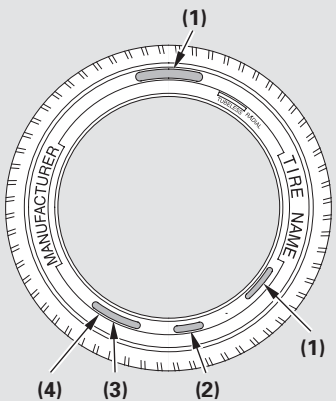

(1) Tire Size
(2) Tire Identification Number (TIN)
(3) Maximum Tire Pressure
(4) Maximum Tire Load

Tire Size

Whenever tires are replaced, they should be replaced with tires of the same size. The following is an example of tire size with an explanation of what each component means.

P245/65R17 105T

P — Vehicle type (P indicates passenger vehicle).

245 — Tire width in millimeters.

65 — Aspect ratio (the tire's section height as a percentage of its width).

R — Tire construction code (R indicates radial).

17 — Rim diameter in inches.

105 — Load index (a numerical code associated with the maximum load the tire can carry).

T — Speed symbol (an alphabetical code indicating the maximum speed rating).

Tire Labeling

Tire Identification Number (TIN)
The tire identification number (TIN) is a group of numbers and letters that look like the following example. TIN is located on the sidewall of the tire.

DOT B97R FW6X 2202

DOT — This indicates that the tire meets all requirements of the U.S. Department of Transportation.

B97R — Manufacturer's identification mark.

FW6X — Tire type code.

2202 — Date of manufacture.
Year
Week

Glossary of Tire Terminology
Cold Tire Pressure — The tire air pressure when the vehicle has been parked for at least three hours or driven less than 1 mile (1.6 km).

Load Rating — Means the maximum load that a tire is rated to carry for a given inflation pressure.

Maximum Inflation Pressure — The maximum tire air pressure that the tire can hold.

Maximum Load Rating — Means the load rating for a tire at the maximum permissible inflation pressure for that tire.

Recommended Inflation Pressure — The cold tire inflation pressure recommended by the manufacturer.

Treadwear Indicators (TWI) — Means the projections within the principal grooves designed to give a visual indication of the degrees of wear of the tread.

Tire Pressure Monitoring System (TPMS) – Required Federal Explanation

All Models
Each tire, including the spare (if provided), should be checked monthly when cold and inflated to the inflation pressure recommended by the vehicle manufacturer on the vehicle placard or tire inflation pressure label.

(If your vehicle has tires of a different size than the size indicated on the vehicle placard or tire inflation pressure label, you should determine the proper tire inflation pressure for those tires.)

As an added safety feature, your vehicle has been equipped with a tire pressure monitoring system (TPMS) that illuminates a low tire pressure telltale

when one or more of your tires is significantly under-inflated.

Accordingly, when the low tire pressure telltale illuminates, you should stop and check your tires as soon as possible, and inflate them to the proper pressure.

Driving on a significantly under-inflated tire causes the tire to overheat and can lead to tire failure. Under-inflation also reduces fuel efficiency and tire tread life, and may affect the vehicle's handling and stopping ability.

Please note that the TPMS is not a substitute for proper tire maintenance, and it is the driver's responsibility to maintain correct tire pressure, even if under-inflation has not reached the level to trigger illumination of the TPMS low tire pressure telltale.

Tire Pressure Monitoring System (TPMS) – Required Federal Explanation

On models without navigation system
Your vehicle has also been equipped with a TPMS malfunction indicator to indicate when the system is not operating properly. The TPMS malfunction indicator is provided by a separate telltale, which displays the symbol "TPMS" when illuminated.

When the malfunction indicator is illuminated,

TPMS

the system may not be able to detect or signal low tire pressure as intended.

TPMS malfunctions may occur for a variety of reasons, including the installation of replacement or alternate tires or wheels on the vehicle that prevent the TPMS from functioning properly.

Always check the TPMS malfunction telltale after replacing one or more tires or wheels on your vehicle to ensure that the replacement or alternate tires and wheels allow the TPMS to continue to function properly.

Tire Pressure Monitoring System (TPMS) – Required Federal Explanation

On models with navigation system
Your vehicle has also been equipped with a TPMS malfunction indicator to indicate when the system is not operating properly. The TPMS malfunction indicator is combined with the low tire pressure telltale. When the system detects a malfunction, the telltale will flash for approximately one minute and then remain continuously illuminated. This sequence will continue upon subsequent vehicle start-ups as long as the malfunction exists.

When the malfunction indicator is illuminated, the system may not be able to detect or signal low tire pressure as intended.

TPMS malfunctions may occur for a variety of reasons, including the installation of replacement or alternate tires or wheels on the vehicle that prevent the TPMS from functioning properly.

Always check the TPMS malfunction telltale after replacing one or more tires or wheels on your vehicle to ensure that the replacement or alternate tires and wheels allow the TPMS to continue to function properly.

Emissions Controls

The burning of gasoline in your vehicle's engine produces several by-products. Some of these are carbon monoxide (CO), oxides of nitrogen (NOx), and hydrocarbons (HC). Gasoline evaporating from the tank also produces hydrocarbons. Controlling the production of NOx, CO, and HC is important to the environment. Under certain conditions of sunlight and climate, NOx and HC react to form photochemical "smog." Carbon monoxide does not contribute to smog creation, but it is a poisonous gas.

The Clean Air Act
The United States Clean Air Act* sets standards for automobile emissions. It also requires that automobile manufacturers explain to owners how their emissions controls work and what to do to maintain them. This section summarizes how the emissions controls work. Scheduled maintenance is on page 324 .

* In Canada, Honda vehicles comply with the Canadian emission requirements, as specified in an agreement with Environment Canada, at the time they are manufactured.

Crankcase Emissions Control System
Your vehicle has a positive crankcase ventilation system. This keeps gasses that build up in the engine's crankcase from going into the atmosphere. The positive crankcase ventilation valve routes them from the crankcase back to the intake manifold. They are then drawn into the engine and burned.

Evaporative Emissions Control System
As gasoline evaporates in the fuel tank, an evaporative emissions control canister filled with charcoal adsorbs the vapor. It is stored in this canister while the engine is off. After the engine is started and warmed up, the vapor is drawn into the engine and burned during driving.

Onboard Refueling Vapor Recovery
The onboard refueling vapor recovery (ORVR) system captures the fuel vapors during refueling. The vapors are adsorbed in a canister filled with activated carbon. While driving, the fuel vapors are drawn into the engine and burned off.

Emissions Controls

Exhaust Emissions Controls

The exhaust emissions controls include four systems: PGM-FI, ignition timing control, exhaust gas recirculation, and three way catalytic converter. These four systems work together to control the engine's combustion and minimize the amount of HC, CO, and NOx that come out the tailpipe. The exhaust emissions control systems are separate from the crankcase and evaporative emissions control systems.

PGM-FI System

The PGM-FI system uses sequential multiport fuel injection.
It has three subsystems: air intake, engine control, and fuel control. The powertrain control module (PCM) uses various sensors to determine how much air is going into the engine. It then controls how much fuel to inject under all operating conditions.

Ignition Timing Control System

This system constantly adjusts the ignition timing, reducing the amount of HC, CO, and NOx produced.

Exhaust Gas Recirculation (EGR) System

The exhaust gas recirculation (EGR) system takes some of the exhaust gas and routes it back into the intake manifold. Adding exhaust gas to the air/fuel mixture reduces the amount of NOx produced when the fuel is burned.

Three Way Catalytic Converter

The three way catalytic converter is in the exhaust system. Through chemical reactions, it converts HC, CO, and NOx in the engine's exhaust to carbon dioxide (CO_2), nitrogen (N_2), and water vapor.

Replacement Parts

The emissions control systems are designed and certified to work together in reducing emissions to levels that comply with the Clean Air Act. To make sure the emissions remain low, you should use only new Honda replacement parts or their equivalent for repairs. Using lower quality parts may increase the emissions from your vehicle.

The emissions control systems are covered by warranties separate from the rest of your vehicle. Read your warranty manual for more information.

Three Way Catalytic Converter

The three way catalytic converter contains precious metals that serve as catalysts, promoting chemical reactions to convert the exhaust gasses without affecting the metals. The catalytic converter is referred to as a three-way catalyst, since it acts on HC, CO, and NOx. A replacement unit must be an original Honda part or its equivalent.

The three way catalytic converter must operate at a high temperature for the chemical reactions to take place. It can set on fire any combustible materials that come near it. Park your vehicle away from high grass, dry leaves, or other flammables.

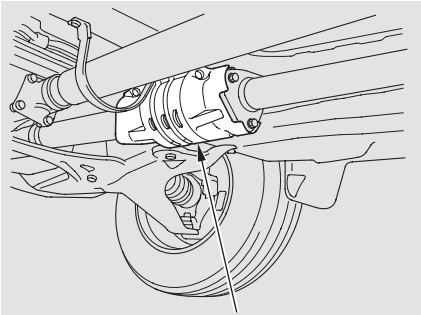

THREE WAY CATALYTIC CONVERTER

A defective three way catalytic converter contributes to air pollution, and can impair your engine's performance. Follow these guidelines to protect your vehicle's three way catalytic converter.

- Always use unleaded gasoline. Even a small amount of leaded gasoline can contaminate the catalyst metals, making the three way catalytic converter ineffective.

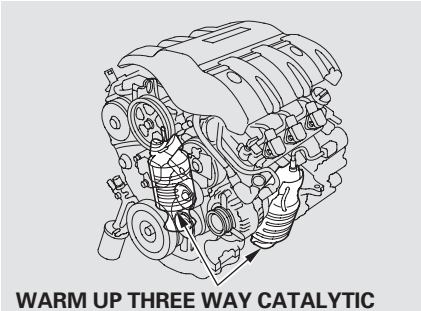

WARM UP THREE WAY CATALYTIC CONVERTERS

- Keep the engine well maintained.
- Have your vehicle diagnosed and repaired if it is misfiring, backfiring, stalling, or otherwise not running properly.

Emissions Testing

Testing of Readiness Codes
If you take your vehicle for an emissions test shortly after the battery has been disconnected or gone dead, it may not pass the test. This is because of certain "readiness codes" that must be set in the on-board diagnostics for the emissions systems. These codes are erased when the battery is disconnected, and set again only after several days of driving under a variety of conditions.

If the testing facility determines that the readiness codes are not set, you will be requested to return at a later date to complete the test. If you must get the vehicle retested within the next two or three days, you can condition the vehicle for retesting by doing the following.

1. Make sure the gas tank is nearly, but not completely, full (around 3/4).
2. Make sure the vehicle has been parked with the engine off for 6 hours or more.
3. Make sure the ambient temperature is between 40° and 95°F (4° and 35°C).
4. Without touching the accelerator pedal, start the engine, and let it idle for 20 seconds.
5. Keep the vehicle in Park. Increase the engine speed to 2,000 rpm, and hold it there until the temperature gauge rises to at least 1/4 of the scale (about 3 minutes).
6. Without touching the accelerator pedal, let the engine idle for 20 seconds.
7. Select a nearby lightly traveled major highway where you can maintain a speed of 50 to 60 mph (80 to 97 km/h) for at least 20 minutes. Drive on the highway in D. Do not use the cruise control. When traffic allows, drive for 90 seconds without moving the accelerator pedal. (Vehicle speed may vary slightly; this is okay.) If you cannot do this for a continuous 90 seconds because of traffic conditions, drive for at least 30 seconds, then repeat it two more times (for a total of 90 seconds).

8. Then drive in city/suburban traffic for at least 10 minutes. When traffic conditions allow, let the vehicle coast for several seconds without using the accelerator pedal or the brake pedal.

9. Make sure the vehicle has been parked with the engine off for 30 minutes.

If the testing facility determines the readiness codes are still not set, see your dealer.

Service Information Summary

Gasoline:
Unleaded gasoline, pump octane number of 87 or higher.

Fuel Tank Capacity:
22.01 US gal (83.3 ℓ)

Recommended Engine Oil:
API Premium grade 5W-20 detergent oil (see page 326).

Oil change capacity (including filter):
4.5 US qt (4.3 ℓ)

Automatic Transmission Fluid:
Honda Genuine ATF-Z1 (automatic transmission fluid) (see page 332).

Power Steering Fluid:
Honda Power Steering Fluid preferred, or another brand of power steering fluid as a temporary replacement. Do not use ATF (see page 335).

Brake Fluid:
Honda Heavy Duty Brake Fluid DOT 3 preferred, or a DOT 3 or DOT 4 brake fluid as a temporary replacement (see page 334).

Rear Differential Fluid:
Honda VTM-4 Differential Fluid (see page 333).

Transfer Assembly Fluid:
SAE 90 or SAE 80W-90 viscosity hypoid gear oil, API service classified GL4 or GL5 only.

Tire Pressure (measured cold):
Front/Rear:
32 psi (220 kPa , 2.2 kgf/cm^2)
Compact Spare Tire:
60 psi (420 kPa , 4.2 kgf/cm^2)

Warranty and Customer Relations

Customer Service Information..... 404
Warranty Coverages 405
Reporting Safety Defects
(U.S. Vehicles) 406
Authorized Manuals..... 407

Customer Service Information

Honda dealership personnel are trained professionals. They should be able to answer all your questions. If you encounter a problem that your dealership does not solve to your satisfaction, please discuss it with the dealership's management. The service manager or general manager can help. Almost all problems are solved in this way.

If you are dissatisfied with the decision made by the dealership's management, contact Honda Customer Service.

U.S. Owners:
American Honda Motor Co., Inc.
Automobile Customer Service
Mail Stop 500-2N-7A
1919 Torrance Boulevard
Torrance, California 90501-2746

Tel: (800) 999-1009

Canadian Owners:
Customer Relations
Honda Canada Inc.

Visit www.honda.ca for contact information

Tel: 1-888-9-HONDA-9
Fax: 1-877-939-0909

In Puerto Rico and the U.S. Virgin Islands:
Vortex Motor Corp.
Bella International
P.O. Box 190816
San Juan, PR 00919-0816

Tel: (787) 620-7546

When you call or write, please give us this information:

- Vehicle identification number (see page 386)
- Name and address of the dealer who services your vehicle
- Date of purchase
- Odometer reading on your vehicle
- Your name, address, and telephone number
- A detailed description of the problem
- Name of the dealer who sold the vehicle to you

Warranty Coverages

U.S. Owners

Your new vehicle is covered by these warranties:

New Vehicle Limited Warranty — covers your new vehicle, except for the battery, emissions control systems, and accessories, against defects in materials and workmanship.

Emissions Control Systems Defects Warranty and Emissions Performance Warranty — these two warranties cover your vehicle's emissions control systems. Time, mileage, and coverage are conditional. Please read your warranty booklet for exact information.

Original Equipment Battery Limited Warranty — this warranty gives up to 100% credit toward a replacement battery.

Seat Belt Limited Warranty — a seat belt that fails to function properly is covered by a limited warranty. Please read your warranty booklet for details.

Rust Perforation Limited Warranty — all exterior body panels are covered for rust-through from the inside for the specified time period with no mileage limit.

Accessory Limited Warranty — Honda accessories are covered under this warranty. Time and mileage limits depend on the type of accessory and other factors. Please read your warranty booklet for details.

Replacement Parts Limited Warranty — covers all Honda replacement parts against defects in materials and workmanship.

Replacement Battery Limited Warranty — provides prorated coverage for a replacement battery purchased from your dealer.

Replacement Muffler Lifetime Limited Warranty — provides coverage for as long as the purchaser of the muffler owns the vehicle.

Restrictions and exclusions apply to all these warranties. Please read the 2010 Honda warranty information booklet that came with your vehicle for precise information on warranty coverages. Your vehicle's original tires are covered by their manufacturer. Tire warranty information is in a separate booklet.

Canadian Owners

Please refer to the 2010 warranty manual that came with your vehicle.

Reporting Safety Defects (U.S. Vehicles)

If you believe that your vehicle has a defect which could cause a crash or could cause injury or death, you should immediately inform the National Highway Traffic Safety Administration (NHTSA), in addition to notifying American Honda Motor Co., Inc.

If NHTSA receives similar complaints, it may open an investigation, and if it finds that a safety defect exists in a group of vehicles, it may order a recall and remedy campaign. However, NHTSA cannot become involved in individual problems between you, your dealer, or American Honda Motor Co., Inc.

To contact NHTSA, you may call the Vehicle Safety Hotline toll-free at 1-888-327-4236
(TTY: 1-800-424-9153); go to *http://www.safercar.gov*; or write to: Administrator, NHTSA, 1200 New Jersey Avenue, SE., Washington, DC 20590.
You can also obtain other information about motor vehicle safety from *http://www.safercar.gov*.

Authorized Manuals

Purchasing Factory Authorized Manuals (U.S. only)

The publications shown below can be purchased from Helm Incorporated. You can order by phone or online:

- Call Helm Inc. at 1-800-782-4356 (credit card orders only)
- Go online at *www. helminc. com*

If you are interested in other years or models, contact Helm Inc. at 1-800-782-4356.

Publication Form Number	Form Description
61SJC04	2009-2010 Honda Ridgeline Service Manual
61SJC04EL	2009-2010 Honda Ridgeline Electrical Troubleshooting Manual
61SJC30	2006 Model Series Ridgeline Body Repair Manual
31SJC640	2010 Honda Ridgeline Owner's Manual
31SJC830	2010 Honda Ridgeline Navigation Manual
31SJCR30	2010 Honda Ridgeline Technology Reference Guide
31SJCM40	2010 Ridgeline Honda Service History
HON-R	Order Form for Previous Years-Indicate Year and Model Desired

Service Manual:
Covers maintenance and recommended procedures for repair to engine and chassis components. It is written for the journeyman mechanic, but it is simple enough for most mechanically inclined owners to understand.

Electrical Troubleshooting Manual:
Complements the Service Manual by providing in-depth troubleshooting information for each electrical circuit in your vehicle.

Body Repair Manual:
Describes the procedures involved in the replacement of damaged body parts.