2015

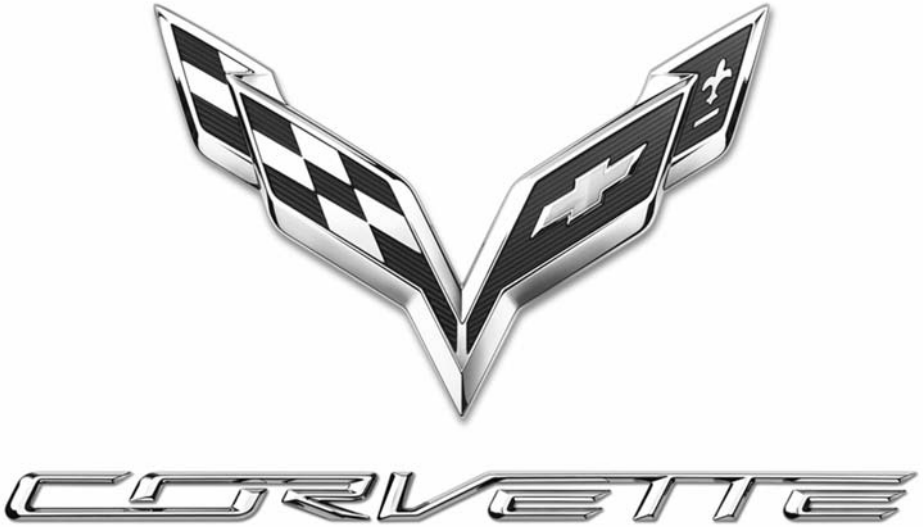

chevrolet.com (U.S.)
chevrolet.gm.ca (Canada)
chevrolet.com.mx (Mexico)

2015 Chevrolet Corvette Owner Manual

In Brief 1-1
Instrument Panel 1-2
Initial Drive Information 1-4
Vehicle Features 1-17
Performance and Maintenance 1-19

Keys, Doors, and Windows 2-1
Keys and Locks 2-1
Doors 2-14
Vehicle Security 2-16
Exterior Mirrors 2-19
Interior Mirrors 2-21
Windows 2-21
Roof 2-24

Seats and Restraints 3-1
Head Restraints 3-2
Front Seats 3-2
Safety Belts 3-8
Airbag System 3-15
Child Restraints 3-26

Storage 4-1
Storage Compartments 4-1
Additional Storage Features ... 4-4

Instruments and Controls 5-1
Controls 5-2
Warning Lights, Gauges, and Indicators 5-6
Information Displays 5-26
Vehicle Messages 5-34
Vehicle Personalization 5-45
Universal Remote System 5-52

Lighting 6-1
Exterior Lighting 6-1
Interior Lighting 6-5
Lighting Features 6-6

Infotainment System 7-1
Introduction 7-1
Performance Data Recorder (PDR) 7-1

Climate Controls 8-1
Climate Control Systems 8-1
Air Vents 8-5
Maintenance 8-5

Driving and Operating 9-1
Driving Information 9-2
Starting and Operating 9-18
Engine Exhaust 9-26
Automatic Transmission 9-27
Manual Transmission 9-31
Brakes 9-34
Ride Control Systems 9-37
Cruise Control 9-48
Driver Assistance Systems ... 9-51
Fuel 9-53
Trailer Towing 9-57
Conversions and Add-Ons ... 9-57

Vehicle Care 10-1
General Information 10-2
Vehicle Checks 10-5
Headlamp Aiming 10-37
Bulb Replacement 10-37
Electrical System 10-39
Wheels and Tires 10-46

Jump Starting 10-79
Towing the Vehicle 10-82
Appearance Care 10-82

Service and Maintenance . . . 11-1
General Information 11-1
Maintenance Schedule 11-2
Special Application Services 11-8
Additional Maintenance and Care 11-9
Recommended Fluids, Lubricants, and Parts 11-12
Maintenance Records 11-15

Technical Data 12-1
Vehicle Identification 12-1
Vehicle Data 12-2

Customer Information 13-1
Customer Information 13-1
Reporting Safety Defects 13-12
Vehicle Data Recording and Privacy 13-14

OnStar 14-1
OnStar Overview 14-1
OnStar Services 14-3
OnStar Additional Information 14-6

Index i-1

The names, logos, emblems, slogans, vehicle model names, and vehicle body designs appearing in this manual including, but not limited to, GM, the GM logo, CHEVROLET, the CHEVROLET Emblem, and CORVETTE are trademarks and/or service marks of General Motors LLC, its subsidiaries, affiliates, or licensors.

For vehicles first sold in Canada, substitute the name “General Motors of Canada Limited” for Chevrolet Motor Division wherever it appears in this manual.

This manual describes features that may or may not be on the vehicle because of optional equipment that was not purchased on the vehicle, model variants, country specifications, features/applications that may not be available in your region, or changes subsequent to the printing of this owner manual.

Refer to the purchase documentation relating to your specific vehicle to confirm the features.

Keep this manual in the vehicle for quick reference.

Canadian Vehicle Owners

Propriétaires Canadiens

A French language manual can be obtained from your dealer, at www.helminc.com, or from:

On peut obtenir un exemplaire de ce guide en français auprès du concessionnaire ou à l'adresse savant:

Helm, Incorporated
Attention: Customer Service
47911 Halyard Drive
Plymouth, MI 48170

Using this Manual

To quickly locate information about the vehicle, use the Index in the back of the manual. It is an alphabetical list of what is in the manual and the page number where it can be found.

Litho in U.S.A.
Part No. 22885403 A First Printing

©2014 General Motors LLC. All Rights Reserved.

Danger, Warnings, and Cautions

Warning messages found on vehicle labels and in this manual describe hazards and what to do to avoid or reduce them.

⚠ Danger

Danger indicates a hazard with a high level of risk which will result in serious injury or death.

⚠ Warning

Warning indicates a hazard that could result in injury or death.

⚠ Caution

Caution indicates a hazard that could result in property or vehicle damage.

A circle with a slash through it is a safety symbol which means “Do Not,” “Do not do this,” or “Do not let this happen.”

Symbols

The vehicle has components and labels that use symbols instead of text. Symbols are shown along with the text describing the operation or information relating to a specific component, control, message, gauge, or indicator.

: This symbol is shown when you need to see your owner manual for additional instructions or information.

: This symbol is shown when you need to see a service manual for additional instructions or information.

Vehicle Symbol Chart

Here are some additional symbols that may be found on the vehicle and what they mean. For more information on the symbol, refer to the Index.

: Airbag Readiness Light

: Air Conditioning

: Antilock Brake System (ABS)

: Audio Steering Wheel Controls or OnStar® (if equipped)

: Brake System Warning Light

: Charging System

: Cruise Control

: Engine Coolant Temperature

: Exterior Lamps

: Fuel Gauge

: Fuses

: Headlamp High/Low-Beam Changer

: LATCH System Child Restraints

: Malfunction Indicator Lamp

: Oil Pressure

: Power

: Remote Vehicle Start

: Safety Belt Reminders

: Tire Pressure Monitor

: Traction Control/Active Handling System

: Windshield Washer Fluid

✍ NOTES

In Brief

Instrument Panel
Instrument Panel 1-2

Initial Drive Information
Initial Drive Information 1-4
Remote Keyless Entry (RKE) System 1-4
Remote Vehicle Start 1-5
Door Locks 1-5
Trunk Release 1-7
Windows 1-8
Seat Adjustment 1-8
Memory Features 1-9
Heated and Ventilated Seats 1-10
Safety Belts 1-10
Passenger Sensing System 1-11
Mirror Adjustment 1-11
Steering Wheel Adjustment 1-12
Interior Lighting 1-13
Exterior Lighting 1-13
Windshield Wiper/Washer 1-14
Climate Controls 1-15
Transmission 1-16

Vehicle Features
Infotainment System 1-17
Steering Wheel Controls 1-17
Cruise Control 1-17
Driver Information Center (DIC) 1-17
Rear Vision Camera (RVC) 1-18
Power Outlets 1-18
Universal Remote System . . . 1-18
Roof Panel 1-19
Convertible 1-19

Performance and Maintenance
Traction Control/Electronic Stability Control 1-19
Tire Pressure Monitor 1-20
Performance Vehicle Features 1-20
Engine Oil Life System 1-21
Car Wash Guidelines 1-21
Driving for Better Fuel Economy 1-21
Roadside Assistance Program 1-22
OnStar® 1-22

Instrument Panel

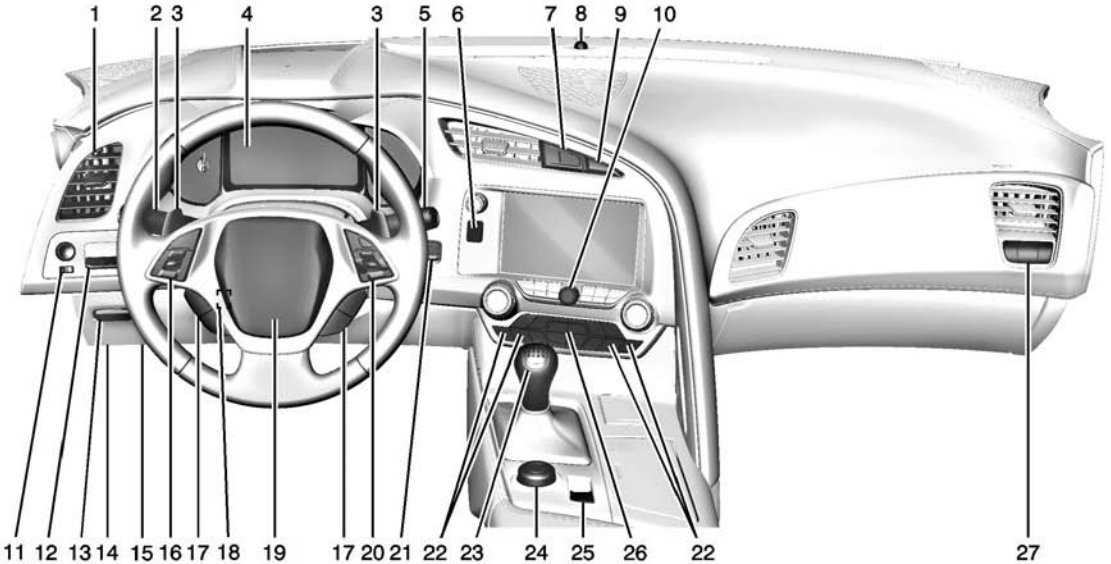

1. *Air Vents on page 8-5*.
2. Turn Signal Lever. See *Turn and Lane-Change Signals on page 6-5*.

   Exterior Lamp Controls on page 6-1.
3. Manual Shift Paddles (If Equipped). See *Manual Mode on page 9-28*.

   Active Rev Match Paddles (If Equipped). See *Active Rev Match on page 9-33*.
4. *Instrument Cluster on page 5-7*.
5. *Windshield Wiper/Washer on page 5-2*.
6. Instrument Panel Storage Button. See *Instrument Panel Storage on page 4-1*.
7. Passenger Airbag Status Indicator. See *Passenger Sensing System on page 3-20*.
8. Light Sensor. See *Automatic Headlamp System on page 6-3*.
9. *Hazard Warning Flashers on page 6-4*.
10. *Infotainment on page 7-1*.
11. *Power Mirrors on page 2-20*.
12. Head-Up Display Controls (If Equipped). See *Head-Up Display (HUD) on page 5-29*.
13. Hatch/Trunk Release Button. See *Hatch (Trunk) on page 2-14*.

    Intrusion and Inclination Sensors Disable Switch. See *Vehicle Alarm System on page 2-16*.
14. Data Link Connector (DLC) (Out of View). See *Malfunction Indicator Lamp on page 5-18*.
15. Hood Release (Out of View). See *Hood on page 10-6*.
16. *Cruise Control on page 9-48*.
17. *Steering Wheel Controls on page 5-2*.
18. *Steering Wheel Adjustment on page 5-2*.
19. *Horn on page 5-2*.
20. Bluetooth Controls. See *Steering Wheel Controls on page 5-2*.

    Voice Recognition Controls. See *Steering Wheel Controls on page 5-2*.

    Driver Information Center (DIC) Controls. See *Driver Information Center (DIC) on page 5-26*.
21. Keyless Ignition. See *Ignition Positions on page 9-19*.
22. Driver and Redundant Passenger Heated and Ventilated Seat Controls (If Equipped). See *Heated and Ventilated Front Seats on page 3-7*.
23. Shift Lever (Manual Shown). See *Automatic Transmission on page 9-27* or *Manual Transmission on page 9-31*.
24. Mode Select Knob. See *Competitive Driving Mode on page 9-43*.

25. *Electric Parking Brake on page 9-35*.
26. *Dual Automatic Climate Control System on page 8-1*.
27. Passenger Temperature Control. See *Dual Automatic Climate Control System on page 8-1*.

    Passenger Heated and Ventilated Seat Controls (If Equipped). See *Heated and Ventilated Front Seats on page 3-7*.

Initial Drive Information

This section provides a brief overview about some of the important features that may or may not be on your specific vehicle.

For more detailed information, refer to each of the features which can be found later in this owner manual.

Remote Keyless Entry (RKE) System

The Keyless Access system allows for vehicle entry when the transmitter is within range. See *Remote Keyless Entry (RKE) System Operation on page 2-3*.

The RKE transmitter is used to lock and unlock the doors may work up to 60 m (197 ft) away from the vehicle.

With Remote Start and Convertible Top Shown, Others Similar

Press the button to remove the key. The key can be used to open the vehicle and hatch/trunk if power to the vehicle is lost. See *Hatch (Trunk) on page 2-14*.

: Press to unlock the driver door. Press again within five seconds to unlock both doors.

: Press to lock both doors.

HOLD **:** Press and hold to release the hatch/trunk.

: If equipped, press and release and then immediately press and hold continuously to open the convertible top all the way. Release the button to stop movement. This button will only open the convertible top.

See *Convertible Top on page 2-27*.

: Press and release once to initiate vehicle locator. Press and hold for three seconds to sound the panic alarm. Press again or start the vehicle to stop panic alarm.

: If equipped, press and release and then immediately press and hold for at least four seconds to start the engine from outside the vehicle using the RKE transmitter.

See *Keys on page 2-1* and *Remote Keyless Entry (RKE) System Operation on page 2-3*.

Remote Vehicle Start

If equipped, this feature allows the engine to be started from outside the vehicle.

Starting the Vehicle

1. Press and release on the RKE transmitter.
2. Immediately after completing Step 1, press and hold for at least four seconds or until the turn signal lamps flash.
3. To drive, have the RKE transmitter in the vehicle, press the brake pedal, and then start the vehicle.

When the engine starts, the parking lamps will turn on and remain on as long as the engine is running. The doors will be locked and the climate control system may come on.

The engine will continue to run for 10 minutes. After 30 seconds, repeat the steps if a 10 minute extension is desired. Remote start can be extended only once.

Canceling a Remote Start

To cancel a remote start, do one of the following:

- Press and hold until the parking lamps turn off.
- Turn on the hazard warning flashers.
- Turn the vehicle on and then off.

See *Remote Vehicle Start on page 2-9*.

Door Locks

To lock or unlock a door from the outside, press or on the Remote Keyless Entry (RKE) transmitter.

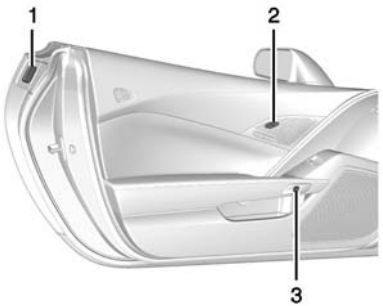

Driver Door

1. Door Handle Sensor
2. Power Door Lock Switch
3. Door Latch Button

For Keyless Access, hold the RKE transmitter within 1 m (3 ft) of the door handle. Grip and press the door handle sensor (1). See *Remote Keyless Entry (RKE) System Operation on page 2-3*. This feature can be programmed. See *Vehicle Personalization on page 5-45*.

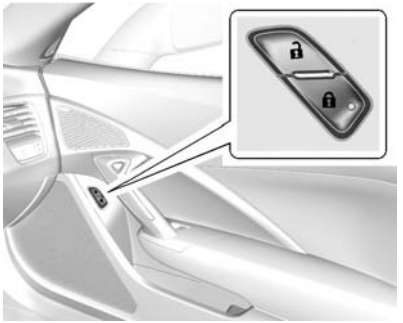

Passenger Door

To lock or unlock a door from the inside, use the power door lock switch.

: Press to lock the doors.

: Press to unlock the doors.

To open a door from the inside, press the door latch button.

The fuel door is also locked and unlocked using these features.

See *Power Door Locks on page 2-13*.

Loss of Vehicle Electrical Power

If the vehicle has lost battery power, open the driver door manually.

From Inside the Vehicle

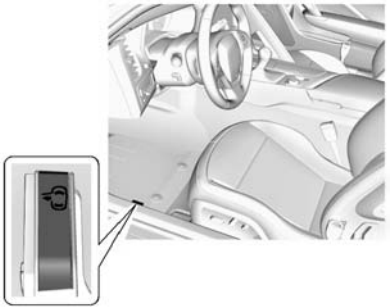

Pull the door release handle.

From Outside the Vehicle

Use the key to open the hatch/trunk.

From Inside the Hatch/Trunk

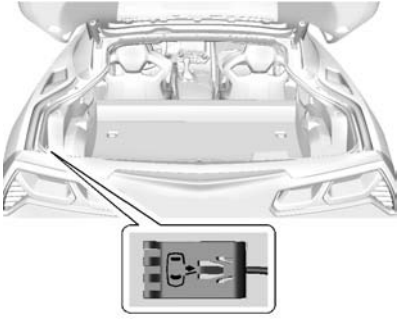

Pull the manual door release handle.

Trunk Release

For automatic transmissions, the vehicle must be in P (Park).

For manual transmissions, the vehicle must be off or stationary with the parking brake set. See *Electric Parking Brake on page 9-35*.

To release the hatch/trunk:

- Press .
- Press and hold HOLD on the Remote Keyless Entry (RKE) transmitter. See *Remote Keyless Entry (RKE) System on page 2-2*.

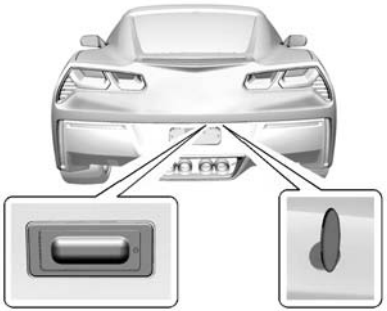

- Press the hatch/trunk release touch pad with the RKE transmitter within range or use the key in the key cylinder. See *Remote Keyless Entry (RKE) System on page 2-2* and *Keys on page 2-1*.

See *Hatch (Trunk) on page 2-14*.

Windows

Pull up or press down on the switch to raise or lower the window. See *Power Windows on page 2-22*.

Retained Accessory Power (RAP) allows the power windows to operate when the ignition is off. See *Retained Accessory Power (RAP) on page 9-23*.

Seat Adjustment

Power Seats

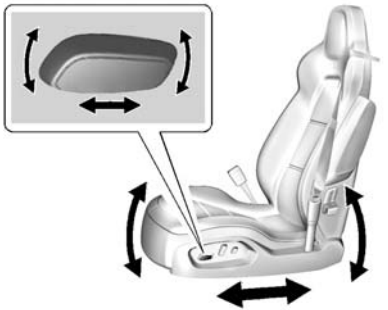

To adjust the seat:

- Move the seat forward or rearward by sliding the control forward or rearward.
- Raise or lower the front part of the seat cushion by moving the front of the control up or down.
- Raise or lower the seat by moving the rear of the control up or down.

See *Power Seat Adjustment on page 3-2*.

Lumbar and Bolster Adjustment

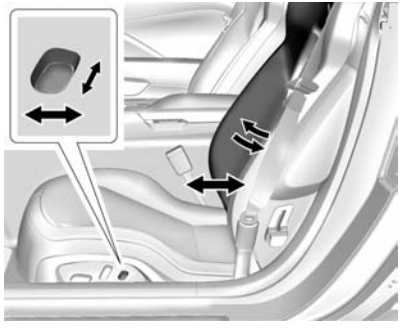

To adjust the lumbar or bolster support (if equipped):

- Press and hold the control forward to increase or rearward to decrease lumbar support.
- If equipped, press and hold the control upward to increase or downward to decrease the side bolster support.

See *Lumbar Adjustment on page 3-3*.

Reclining Seatbacks

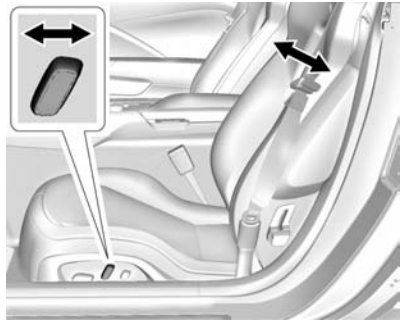

To adjust the seatback:

- Tilt the top of the control rearward to recline.
- Tilt the top of the control forward to raise.

See *Reclining Seatbacks on page 3-3*.

Memory Features

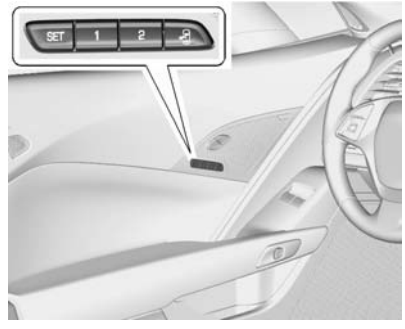

If equipped, the "1," "2," SET, and (Exit) buttons on the driver door are used to manually save and recall memory settings for the driver seat, outside mirrors, and power tilt and telescoping steering column.

See *Memory Seats on page 3-4* and *Vehicle Personalization on page 5-45*.

Heated and Ventilated Seats

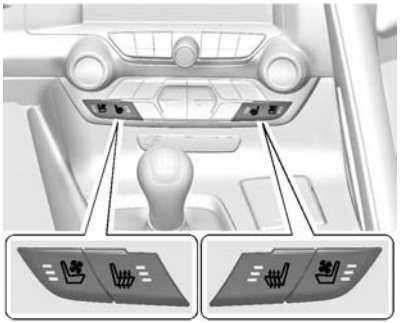

Driver and Redundant Passenger Controls

If equipped, the driver buttons are on the center stack. To operate, the ignition must be on.

Press or on the left side of the climate control panel to ventilate or heat the driver seat. A ventilated seat has a fan that pulls or pushes air through the seat. The air is not cooled.

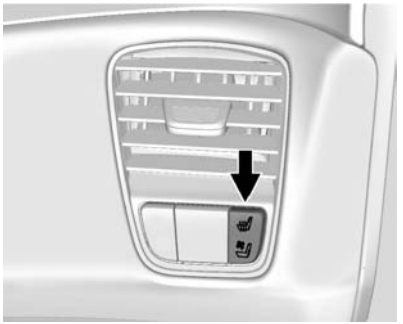

Passenger Controls

The passenger buttons are also on the right side of the instrument panel under the air vent. Press or to heat or ventilate the passenger seat. The driver can also turn on or off the passenger heated and ventilated seats using the buttons on the right side of the climate control panel.

For driver and passenger controls, press the button once for the highest setting. With each press of the button, the seat will change to the next lower setting, and then to the off setting. The indicator lights show three for the highest setting and one for the lowest. If the heated seats are on high, the level may automatically be lowered after approximately 30 minutes.

See *Heated and Ventilated Front Seats on page 3-7*.

Safety Belts

Refer to the following sections for important information on how to use safety belts properly:

- *Safety Belts on page 3-8*.

- *How to Wear Safety Belts Properly on page 3-10*.
- *Lap-Shoulder Belt on page 3-11*.
- *Lower Anchors and Tethers for Children (LATCH System) on page 3-32*.

Passenger Sensing System

United States

Canada and Mexico

The passenger sensing system will turn off the front outboard passenger frontal airbag under certain conditions. No other airbag is affected by the passenger sensing system. See *Passenger Sensing System on page 3-20*.

The passenger airbag status indicator lights on the instrument panel when the vehicle is started. See *Passenger Airbag Status Indicator on page 5-17*.

Mirror Adjustment

Exterior Mirrors

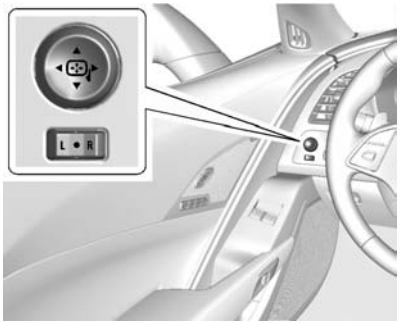

To adjust the mirrors:

1. Press L (Left) or R (Right) to select the mirror.
2. Press the control pad to adjust the mirror.
3. Return the switch to the center to deselect the mirror.

See *Power Mirrors on page 2-20*.

If the vehicle has the memory feature, a preferred mirror position can be stored. See *Memory Seats on page 3-4*.

To fold, pull the mirror toward the vehicle. Push the mirror outward to return it to the original position.

Interior Mirror

Adjustment

Adjust the rearview mirror to clearly view the area behind the vehicle.

Manual Rearview Mirror

To avoid glare of the headlamps from behind, push the tab forward for daytime and pull it rearward for nighttime use.

Automatic Dimming Rearview Mirror

If equipped, the mirror automatically reduces the glare of the headlamps from behind. The dimming feature comes on when the vehicle is started.

See *Automatic Dimming Rearview Mirror on page 2-21*.

Steering Wheel Adjustment

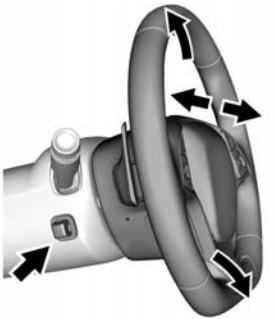

Press the control to move the tilt and telescoping steering wheel up and down or forward and rearward.

Both the tilt and telescoping steering column positions can be stored with your memory settings. See *Memory Seats on page 3-4*.

Do not adjust the steering wheel while driving.

Interior Lighting

Courtesy Lamps

When any door or the hatch/trunk is opened, the interior lamps will come on, unless it is bright outside.

To turn the courtesy lamps on or off, turn the instrument panel brightness knob completely clockwise or counterclockwise.

Reading Lamps

The reading lamps are in the overhead console. The lamps go on when a door is opened. When the doors are closed, press the lamp buttons to turn on each lamp.

Interior Light Control

The knob for this feature is on the left side of the instrument panel. Turn clockwise or counterclockwise to brighten or dim the lights. Turn the knob completely clockwise to turn the interior lights on.

For more information on interior lighting, see:

- *Instrument Panel Illumination Control on page 6-5*.

Exterior Lighting

Exterior Lamps

There are four positions:

⏻ **:** Briefly turn to this position to turn the automatic light control off or on again. When released, the control returns to the AUTO position.

AUTO: Sets the exterior lamps to automatic mode. AUTO mode turns the exterior lamps on and off depending on how much light is available outside the vehicle.

: Turns on the parking lamps including all lamps except the headlamps.

: Turns on the headlamps together with the parking lamps and instrument panel lights.

See:

- *Exterior Lamp Controls on page 6-1*.
- *Automatic Headlamp System on page 6-3*.

Windshield Wiper/Washer

The windshield wiper/washer lever is on the right side of the steering column.

With the ignition in ACC/ACCESSORY or ON/RUN/START, move the lever to select the wiper speed.

HI: Use for fast wipes.

LO: Use for slow wipes.

INT: Move the lever up to INT for intermittent wipes, then turn the INT band up for more frequent wipes or down for less frequent wipes.

OFF: Use to turn the wipers off.

1X : For a single wipe, briefly move the lever down. For several wipes, hold the lever down.

: Pull the lever toward you to spray windshield washer fluid and activate the wipers.

See *Windshield Wiper/Washer on page 5-2.*

Climate Controls

The heating, cooling, and ventilation for the vehicle can be controlled with this system.

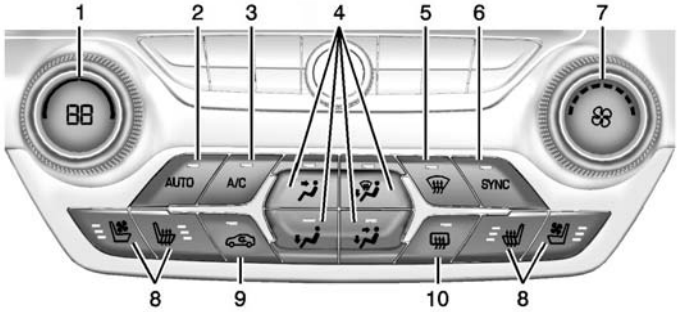

1. Driver Temperature Control
2. AUTO (Automatic Operation)
3. A/C (Air Conditioning)
4. Air Delivery Modes
5. Defrost
6. SYNC
7. Fan Control
8. Driver and Passenger Redundant Heated and Ventilated Front Seat Controls
9. Recirculation
10. Rear Window Defogger

Passenger Temperature Control

The passenger temperature control is below the passenger side air vent.

See *Dual Automatic Climate Control System on page 8-1*.

Transmission

Manual Paddle Shift (Automatic Transmission)

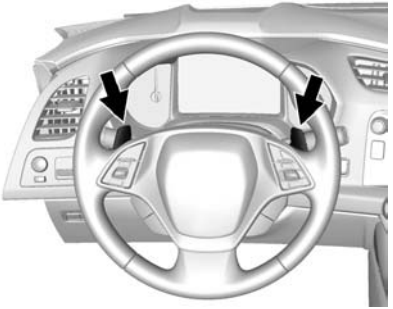

The Manual Paddle Shift system can be used in D (Drive) or M (Manual Mode). The system is activated by pushing the left paddle to downshift and right paddle to upshift. The current gear will be displayed in the instrument cluster, or the Head-Up Display (HUD), if equipped.

The Manual Paddle Shift system will not allow either an upshift or a downshift, if the vehicle speed is too fast or too slow, nor will it allow a start from 4 (Fourth) or higher gear.

See *Manual Mode on page 9-28*.

Active Rev Match (Manual Transmission)

Vehicles equipped with a manual transmission have Active Rev Match (ARM). ARM aids in smoother shifting by matching the engine speed to the next selected gear. The system is normally off. It is activated and deactivated by pressing either of the paddles marked REV MATCH on the steering wheel. See *Active Rev Match on page 9-33*.

1–4 Shift Message (Manual Transmission)

On vehicles with a manual transmission, when this DIC message is displayed, the transmission can only shift from 1 (First) to 4 (Fourth) instead of 1 (First) to 2 (Second).

For more information about shifting for the best fuel economy, see *Manual Transmission on page 9-31*.

Vehicle Features

Infotainment System

See the infotainment manual for information on the radio, audio players, phone, navigation system, and voice or speech recognition. It also includes information on settings.

Steering Wheel Controls

The infotainment system can be operated by using the steering wheel controls. See "Steering Wheel Controls" in the infotainment manual.

Cruise Control

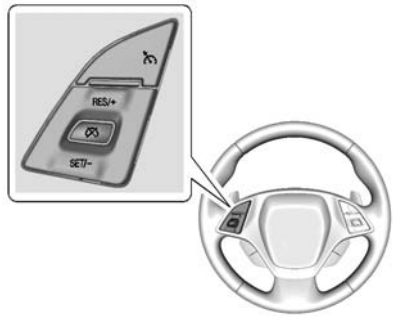

: Press to turn cruise control on or off. A white indicator comes on in the instrument cluster when cruise is turned on.

RES/+: If there is a set speed in memory, press briefly to resume to that speed or press and hold to accelerate. If cruise control is already active, use to increase vehicle speed.

SET/–: Press briefly to set the speed and activate cruise control. If cruise control is already active, use to decrease vehicle speed.

: Press to disengage cruise control without erasing the set speed from memory.

See *Cruise Control on page 9-48*.

Driver Information Center (DIC)

The DIC display is in the instrument cluster. It shows the status of many vehicle systems.

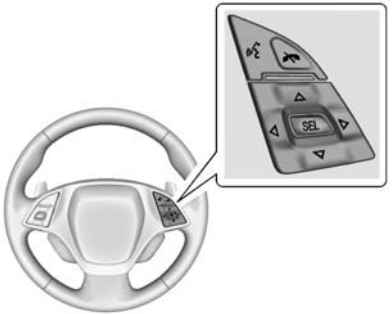

△ or ▽ : Press to move up or down in a list.

◁ or ▷ : Press ◁ to open application menus on the left. Press ▷ to open interaction menus on the right.

SEL: Press to open a menu or select a menu item. Press and hold to reset values on certain screens.

See *Driver Information Center (DIC) on page 5-26*.

Rear Vision Camera (RVC)

The RVC displays a view of the area behind the vehicle, on the infotainment system display, when the vehicle is shifted into R (Reverse).

See *Rear Vision Camera (RVC) on page 9-51*.

Power Outlets

Use the accessory power outlet to plug in electrical equipment, such as a cell phone or MP3 player.

There are three accessory power outlets:

- Inside the center console storage compartment.
- In front of the cupholder.
- In the rear compartment.

Lift the cover to access and replace when not in use.

See *Power Outlets on page 5-4*.

Universal Remote System

This system, if equipped, provides a way to replace up to three remote control transmitters used to activate devices such as garage door openers, security systems, and home automation devices.

Read the instructions completely before attempting to program the Universal Remote system. Because of the steps involved, it may be helpful to have another person

available to assist you with programming the Universal Remote system.

See *Universal Remote System on page 5-52*.

Roof Panel

If equipped with a removable roof panel, there are three release latches. Two are at the front of the roof panel and one is at the rear of the roof panel. See “Removing the Roof Panel” under *Roof Panel on page 2-24*.

Help may be needed to remove the roof panel. Always store the roof panel properly in the rear storage compartment.

For more information:

- See “Storing the Roof Panel” under *Roof Panel on page 2-24*.
- See “Installing the Roof Panel” under *Roof Panel on page 2-24*.

Convertible

If equipped, the convertible top can be automatically opened and closed. For step-by-step instructions, see *Convertible Top on page 2-27*.

Performance and Maintenance

Traction Control/ Electronic Stability Control

The traction control system limits wheel spin. The system turns on automatically every time the vehicle is started.

StabiliTrak is a computer controlled system that helps the driver maintain directional control of the vehicle in difficult driving conditions. This is accomplished by selectively applying any one of the vehicle’s brakes. The system turns on automatically every time the vehicle is started.

- To turn off traction control, press and release the TCS/ StabiliTrak OFF button on the center console. illuminates in the instrument cluster.

- To turn off both traction control and StabiliTrak, press and hold the TCS/StabiliTrak button, until the Traction Off Light and the StabiliTrak OFF Light illuminate in the instrument cluster.
- Press and release the TCS/StabiliTrak button again to turn on both systems.

See *Traction Control/Electronic Stability Control on page 9-37*.

The vehicle has Driver Mode Control and may have Competitive Driving Mode. See *Driver Mode Control on page 9-39* and *Competitive Driving Mode on page 9-43*.

Tire Pressure Monitor

This vehicle may have a Tire Pressure Monitor System (TPMS).

The low tire pressure warning light alerts to a significant loss in pressure of one of the vehicle's tires. If the warning light comes on, stop as soon as possible and inflate the tires to the recommended pressure shown on the Tire and Loading Information label. See *Vehicle Load Limits on page 9-14*. The warning light will remain on until the tire pressure is corrected.

The low tire pressure warning light may come on in cool weather when the vehicle is first started, and then turn off as the vehicle is driven. This may be an early indicator that the tire pressures are getting low and the tires need to be inflated to the proper pressure.

The TPMS does not replace normal monthly tire maintenance. Maintain the correct tire pressures.

See *Tire Pressure Monitor System on page 10-57*.

Performance Vehicle Features

Checking Engine Oil

Your vehicle may have a high performance dry sump lubrication system. This system operates differently than a standard engine lubrication system. See *Engine Oil on page 10-12*.

Check the oil level only after the engine has been thoroughly warmed up and then check between five and 10 minutes of shutoff. This ensures that the oil level reading obtained will be accurate.

Brake Noise

Under certain weather or operating conditions, occasional brake squeal may be heard with the vehicle's

performance braking system. This brake system is designed for superior fade resistance and consistent operation using high performance brake pads. Brake squeal is normal and does not affect system performance.

Tire Chatter/Hop

When driving at slow speeds and in very tight turns, the vehicle may have tire chatter/hop. This condition is normal and the vehicle does not require service.

Road Imperfections/Crown Effects

The vehicle's precise steering and handling make it very responsive to road surface feedback. A slight pull may be felt in the steering depending on the crown of the road and/or other road surface variations such as troughs or ruts. This is normal and the vehicle does not require service.

Engine Oil Life System

The engine oil life system calculates engine oil life based on vehicle use and displays a CHANGE ENGINE OIL SOON DIC message when it is necessary to change the engine oil and filter. The oil life system should be reset to 100% only following an oil change.

Resetting the Oil Life System

1. Scroll through the DIC Info Pages menu until the REMAINING OIL LIFE percentage is displayed. See *Driver Information Center (DIC) on page 5-26*.
2. Press and hold the SEL button on the DIC while the Oil Life display is active. The oil life will change to 100%.

See *Engine Oil Life System on page 10-18*.

Car Wash Guidelines

⚠ Caution

Some automatic car washes can cause damage to the vehicle, wheels, or convertible top, if equipped. Automatic car washes are not recommended, due to lack of clearance for the undercarriage and/or wide rear tires and wheels. See "Washing the Vehicle" under *Exterior Care on page 10-82*

Driving for Better Fuel Economy

Driving habits can affect fuel mileage. Here are some driving tips to get the best fuel economy possible.

- Avoid fast starts and accelerate smoothly.
- Brake gradually and avoid abrupt stops.

- Avoid idling the engine for long periods of time.
- When road and weather conditions are appropriate, use cruise control.
- Always follow posted speed limits or drive more slowly when conditions require.
- Keep vehicle tires properly inflated.
- Combine several trips into a single trip.
- Replace the vehicle's tires with the same TPC Spec number molded into the tire's sidewall near the size.
- Follow recommended scheduled maintenance.
- Select Eco mode for improved fuel economy. This will result in better Active Fuel Management (AFM) operation. See *Active Fuel Management® on page 9-25*.
- For recommended shift speeds, see *Manual Transmission on page 9-31*.

Premium Fuel

Premium fuel is recommended. See *Fuel on page 9-53*.

Roadside Assistance Program

U.S.: 1-800-243-8872

TTY Users (U.S. Only): 1-888-889-2438

Canada: 1-800-268-6800

New Chevrolet owners are automatically enrolled in the Roadside Assistance Program.

See *Roadside Assistance Program on page 13-5*.

OnStar®

This vehicle may be equipped with a comprehensive, in-vehicle system that can connect to a live OnStar Advisor for Emergency, Security, Navigation, Connection, and Diagnostic Services. OnStar services may require a paid subscription. See *OnStar Overview on page 14-1*.

Keys, Doors, and Windows

Keys and Locks
Keys 2-1
Remote Keyless Entry (RKE) System 2-2
Remote Keyless Entry (RKE) System Operation 2-3
Remote Vehicle Start 2-9
Door Locks 2-11
Power Door Locks 2-13
Delayed Locking 2-13
Automatic Door Locks 2-13
Lockout Protection 2-14

Doors
Hatch (Trunk) 2-14

Vehicle Security
Vehicle Security 2-16
Vehicle Alarm System 2-16
Immobilizer 2-18
Immobilizer Operation 2-18

Exterior Mirrors
Convex Mirrors 2-19
Power Mirrors 2-20
Folding Mirrors 2-20
Heated Mirrors 2-20
Automatic Dimming Mirror . . . 2-20
Reverse Tilt Mirrors 2-20

Interior Mirrors
Interior Rearview Mirrors 2-21
Manual Rearview Mirror 2-21
Automatic Dimming Rearview Mirror 2-21

Windows
Windows 2-21
Power Windows 2-22
Sun Visors 2-23

Roof
Roof Panel 2-24
Convertible Top 2-27

Keys and Locks

Keys

⚠ Warning

Leaving children in a vehicle with a Remote Keyless Entry (RKE) transmitter is dangerous and children or others could be seriously injured or killed. They could operate the power windows or other controls or make the vehicle move. The windows will function with the RKE transmitter in the vehicle, and children or others could be caught in the path of a closing window. Do not leave children in a vehicle with an RKE transmitter.

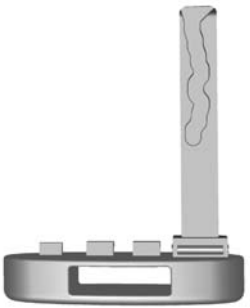

The key inside the RKE transmitter can be used to open the vehicle and hatch/trunk if power to the vehicle is lost. See *Hatch (Trunk) on page 2-14*.

With Remote Start and Convertible Top Shown, Others Similar

Press the button near the bottom of the RKE transmitter to remove the key. Never pull the key out without pressing the button.

This vehicle has a Keyless Access system with pushbutton start. See *Ignition Positions on page 9-19* for information on starting the vehicle.

If it becomes difficult to turn the key, inspect the key blade for debris.

If locked out of the vehicle, contact Roadside Assistance. See *Roadside Assistance Program on page 13-5*.

With an active OnStar subscription, an OnStar Advisor may remotely unlock the vehicle. See *OnStar Overview on page 14-1*.

Remote Keyless Entry (RKE) System

See *Radio Frequency Statement on page 13-12*.

If there is a decrease in the RKE operating range:

- Check the distance. The transmitter may be too far from the vehicle.
- Check the location. Other vehicles or objects may be blocking the signal.
- Check the transmitter's battery. See “Battery Replacement” later in this section.

- If the transmitter is still not working correctly, see your dealer or a qualified technician for service.

Remote Keyless Entry (RKE) System Operation

The Keyless Access system allows for vehicle entry when the transmitter is within 1 m (3 ft). See “Keyless Access Operation” later in this section.

The RKE transmitter functions may work up to 60 m (197 ft) away from the vehicle.

Other conditions can affect the performance of the transmitter. See *Remote Keyless Entry (RKE) System on page 2-2*.

With Remote Start and Convertible Top Shown, Others Similar

(Lock): Press to lock all doors. The turn signal indicators may flash and/or the horn may sound to indicate locking. See “Remote Lock, Unlock, Start” under *Vehicle Personalization on page 5-45*.

If the driver door is open when is pressed and Unlocked Door Anti-Lockout is enabled through the vehicle personalization, all doors will lock and then the driver door will immediately unlock. See “Unlocked Door Anti-Lockout” under *Vehicle Personalization on page 5-45*. If the passenger door is open when is pressed, both doors lock.

Pressing may also arm the theft-deterrent system. See *Vehicle Alarm System on page 2-16*.

When the doors are locked, the fuel door is also locked.

(Unlock): Press to unlock the driver door. Press again within five seconds to unlock both doors. When remotely unlocking the vehicle at night, the headlamps and back-up lamps will come on for about 30 seconds to light your approach to the vehicle. The turn signal indicators may flash to indicate unlocking. Memory seat positions may be recalled when unlocking the vehicle and when the door is open.

See “Remote Lock, Unlock, Start” under *Vehicle Personalization on page 5-45* and *Memory Seats on page 3-4*.

Pressing 🔒 will disarm the theft-deterrent system. See *Vehicle Alarm System on page 2-16*.

When the doors are unlocked, the fuel door is also unlocked.

(Remote Start): If equipped, press and release 🔒 and then immediately press and hold for at least four seconds to start the engine from outside the vehicle using the RKE transmitter. See *Remote Vehicle Start on page 2-9*.

(Vehicle Locator/Panic Alarm): Press and release to initiate vehicle locator. The exterior lamps flash and the horn chirps three times. Press and hold for three seconds to sound the panic alarm. The horn sounds and the turn signal lamps flash for 30 seconds, or until is pressed again or the vehicle is started.

HOLD **(Hatch/Trunk):** Press and hold to release the hatch/trunk. If the engine is running, the shift lever must be in P (Park) for an automatic transmission. For a manual transmission, the shift lever must be in Neutral with the parking brake set.

(Convertible Top): If equipped, press and release 🔒, then immediately press and hold continuously to open all the way. Release the button to stop movement. This button will only open the convertible top.

Convertible Top

- Do not try to start the vehicle while using the RKE transmitter to open the convertible top. Release both the RKE transmitter button and ENGINE START/STOP button and wait a few seconds before starting the vehicle normally.
- The passive door unlock feature may not operate properly while using the RKE transmitter to open the convertible top.

Keyless Access Operation

This vehicle has the Keyless Access system that lets you unlock and unlatch the doors and access the trunk without removing the RKE transmitter from your pocket, purse, briefcase, etc. The RKE transmitter must be within 1 m (3 ft) of the door being opened. There will be a touch pad on the inside of the door handles.

The Keyless Access system can be programmed to unlock both doors on the first unlock press from the driver door. See *Vehicle Personalization on page 5-45*.

Keyless Unlocking

Press the door handle sensor to unlock and open the doors if the RKE transmitter is within range. See *Door Locks on page 2-11* and "Passive Door Unlock" under *Vehicle Personalization on page 5-45*.

Passive Locking

Keyless Access will lock several seconds after all doors are closed if the vehicle is off and at least one transmitter has been removed or none remain in the vehicle.

The fuel door will also lock at this time.

If other electronic devices interfere with the RKE transmitter signal, the vehicle may not detect the RKE transmitter inside the vehicle. If passive locking is enabled, the doors may lock with the RKE transmitter inside the vehicle. Do not leave the RKE transmitter in an unattended vehicle.

To customize whether the doors automatically lock when exiting the vehicle, see "Passive Door Lock" under *Vehicle Personalization on page 5-45*.

Temporary Disable Passive Locking Feature

Temporarily disable the passive locking by pressing and holding 🔒 on the interior door switch with a door open for at least four seconds, or until three chimes are heard. Passive locking will then remain disabled until 🔓 on the interior door is pressed, or until the vehicle is turned on.

To customize the doors to automatically lock when exiting the vehicle, see "Remote Lock, Unlock, Start" under *Vehicle Personalization on page 5-45*.

Remote Left in Vehicle Alert

When the vehicle is turned off and a remote is left in the vehicle, the horn will chirp three times after both doors are closed. To turn on or off see "Remote Left in Vehicle Alert" under *Vehicle Personalization on page 5-45*.

Keyless Trunk Opening

Press the release touch pad to open the trunk if the RKE transmitter is within 1 m (3 ft).

Programming Transmitters to the Vehicle

Only RKE transmitters programmed to this vehicle will work. If a transmitter is lost or stolen, a replacement can be purchased and

programmed through your dealer. The vehicle can be reprogrammed so that lost or stolen transmitters no longer work. Each vehicle can have up to eight transmitters programmed to it.

Programming with a Recognized Transmitter

A new transmitter can be programmed to the vehicle when there is one recognized transmitter.

1. The vehicle must be off and both the recognized and new transmitters must be with you.
2. Remove the key base from the recognized RKE transmitter.
3. Place the recognized transmitter in the cupholder.
4. Insert the vehicle key into the key cylinder above the license plate.
5. Open the hatch/trunk.
6. Turn the key five times within 10 seconds.
7. The DIC displays READY FOR REMOTE # 3 or 4, up to 8.

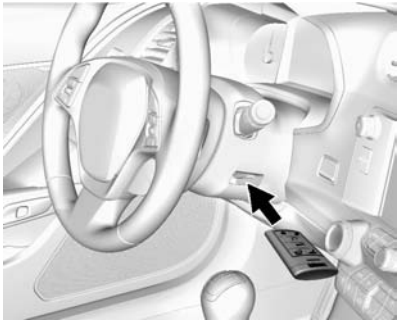

8. Place the new transmitter in the steering column transmitter pocket with the buttons facing up and the base toward the opening facing the passenger side.
9. Press the ENGINE START/STOP button.
10. The DIC displays READY FOR REMOTE # 4 or 5, up to 8.
11. Press 🔓 on each newly programmed transmitter to complete the process.
12. To program additional transmitters, repeat Steps 8–11. Press and hold the ENGINE START/STOP button for 12 seconds if programming is complete.

    Return the key base back into the RKE transmitter.

Programming without a Recognized Transmitter

If there are no currently recognized transmitters available, follow this procedure to program up to eight transmitters. This feature is not available in Canada. This procedure will take approximately 30 minutes to complete. The vehicle must be off and all transmitters to be programmed must be present.

1. The vehicle must be off.

2. Remove the key from the transmitter and insert the vehicle key into the key cylinder above the license plate.
3. Open the hatch/trunk.
4. Turn the key five times within 10 seconds.

   The DIC message displays REMOTE LEARN PENDING PLEASE WAIT.
5. Return key base back into the RKE transmitter.
6. Wait for 10 minutes until the DIC displays PRESS ENGINE START BUTTON TO LEARN, then press the ENGINE START/STOP button.

   The DIC reads REMOTE LEARN PENDING, PLEASE WAIT.
7. Repeat Step 6 two additional times. After the third time all previously known transmitters will no longer work with the vehicle. Remaining transmitters can be relearned during the next steps. The DIC display should now show READY FOR REMOTE #1.

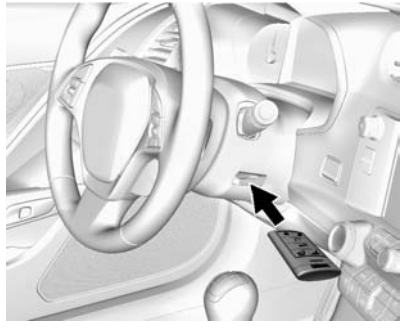

8. Place the new transmitter in the steering column transmitter pocket with the buttons facing up and the base toward the opening facing the passenger side.
9. Press the ENGINE START/STOP button. When the transmitter is learned, the DIC display will show that it is ready to program the new transmitter.
10. Remove the transmitter from the transmitter pocket and press 🔒 or 🔓 on the transmitter.

    To program additional transmitters, repeat Steps 9–10. When all additional transmitters are programmed, press and hold the ENGINE START/STOP button for approximately 12 seconds to exit programming mode.

Starting the Vehicle with a Low Transmitter Battery

If the transmitter battery is weak or if there is interference with the signal, the DIC may display a NO REMOTE DETECTED or NO REMOTE KEY WAS DETECTED PLACE KEY IN TRANSMITTER POCKET, THEN START YOUR VEHICLE message when you try to start the vehicle. See *Key and Lock Messages on page 5-38*.

⚠ Caution

When replacing the battery, do not touch any of the circuitry on the transmitter. Static from your body could damage the transmitter.

To start the vehicle:

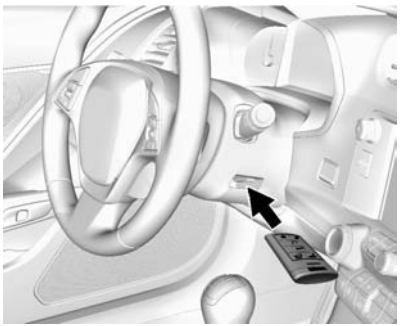

1. Place the transmitter in the steering column transmitter pocket with the buttons facing up and the base toward the passenger side.
2. With the vehicle in P (Park) or N (Neutral), press the brake pedal and the ENGINE START/ STOP button.

   Replace the transmitter battery as soon as possible.

Battery Replacement

⚠ Caution

When replacing the battery, do not touch any of the circuitry on the transmitter. Static from your body could damage the transmitter.

Replace the battery if the REPLACE BATTERY IN REMOTE KEY message displays in the DIC.

1. Press the button near the bottom of the transmitter and pull the key out.

2. Use the oval base of the key blade to separate the two halves of the transmitter.

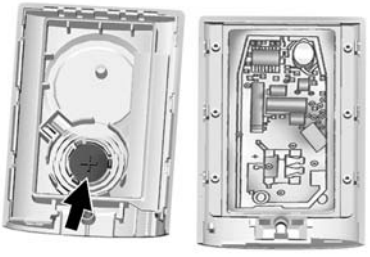

3. Remove the old battery. Do not use a metal object.
4. Insert the new battery on the back housing, positive side facing down. Replace with a CR2032 or equivalent battery.
5. Align the key release button and snap the transmitter back together.

Remote Vehicle Start

If equipped, this feature allows the engine to be started from up to 60 m (197 ft) away from the vehicle.

(Remote Vehicle Start): This button will be on the RKE transmitter if the vehicle has remote start.

The climate control system will use the previous settings during a remote start. The rear window defogger may come on during remote start based on cold ambient conditions. The rear defog indicator light does not come on during remote start.

During a remote start, the heated or ventilated seats, if equipped, may turn on automatically. See *Heated and Ventilated Front Seats on page 3-7*.

Laws in some local communities may restrict the use of remote starters. For example, some laws may require a person using remote start to have the vehicle in view. Check local regulations for any requirements.

If the vehicle is low on fuel, do not use the remote start feature. The vehicle may run out of fuel.

The RKE transmitter range may be less while the vehicle is running.

Other conditions can affect the performance of the transmitter. See *Remote Keyless Entry (RKE) System on page 2-2*.

Starting the Engine Using Remote Start

1. Press and release on the RKE transmitter.
2. Immediately press and hold for at least four seconds or until the turn signal lamps flash. The lamps flash to confirm the request to remote start the vehicle has been received.

   During the remote start, the doors will be locked and the parking lamps will remain on as long as the engine is running.

   The engine will shut off after 10 minutes unless a time extension is done.
3. To drive, have the RKE transmitter in the vehicle, press the brake pedal, and then start the vehicle.

Extending Engine Run Time

The engine run time can also be extended by another 10 minutes, if during the first 10 minutes Steps 1–2 are repeated while the engine is still running. An extension can be requested, 30 seconds after starting. This provides a total of 20 minutes.

The remote start can only be extended once per ignition cycle.

A maximum of two remote starts, or a remote start with an extension, are allowed between ignition cycles.

After two remote starts, the vehicle's ignition must be changed to ON/RUN/START and then back to OFF before the remote start procedure can be used again.

Canceling a Remote Start

To cancel a remote start, do any of the following:

- Press and hold until the parking lamps turn off.
- Turn on the hazard warning flashers.
- Turn the vehicle on and then back off.

Conditions in Which Remote Start Will Not Work

The remote start will not operate if any of the following occur:

- The ignition is in any mode other than OFF.
- The transmitter is in the vehicle.
- The hood is not closed.
- The hazard warning flashers are on.
- There is an emission control system malfunction.
- The engine coolant temperature is too high.

- The oil pressure is low.
- Two remote vehicle starts have already been used.
- The vehicle is not in P (Park).

Door Locks

⚠ Warning

Unlocked doors can be dangerous.

- Passengers — especially children — can easily open the doors and fall out of a moving vehicle. When a door is locked it will not open. You increase the chance of being thrown out of the vehicle in a crash if the doors are not locked. So, wear safety belts properly and lock the doors whenever you drive.
- Young children who get into unlocked vehicles may be unable to get out. A child can

(Continued)

Warning (Continued)

be overcome by extreme heat and can suffer permanent injuries or even death from heat stroke. Always lock your vehicle whenever you leave it.

- Outsiders can easily enter through an unlocked door when you slow down or stop your vehicle. Locking your doors can help prevent this from happening.

To lock or unlock from the outside, press 🔒 or 🔓 on the Remote Keyless Entry (RKE) transmitter.

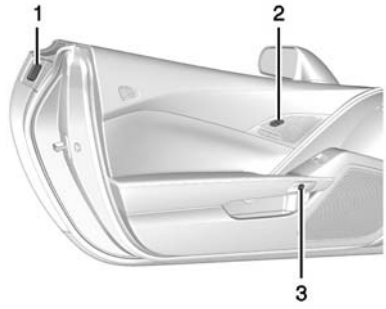

1. Door Handle Sensor
2. Power Door Lock Switch
3. Door Latch Button

For Keyless Access, hold the RKE transmitter within 1 m (3 ft) of the door handle. Grip and press the door handle sensor (1) to open. See *Remote Keyless Entry (RKE) System Operation on page 2-3*. When the passenger door is opened first, the driver door will also unlock. To program this feature, see *Vehicle Personalization on page 5-45*.

To lock or unlock from the inside, use the power door lock switch (2). See *Power Door Locks on page 2-13*.

To open a door from the inside, press the door latch button (3).

If the vehicle has lost battery power, the driver door can be opened manually:

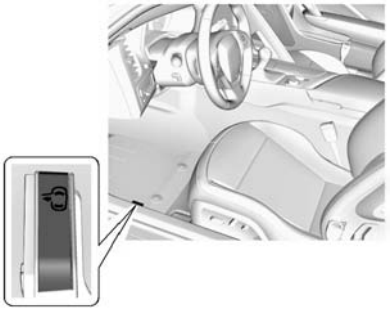

From inside the vehicle, pull the door release handle.

From outside the vehicle, use the key to open the hatch/trunk. See *Keys on page 2-1*.

Pull the manual door release handle.

Power Door Locks

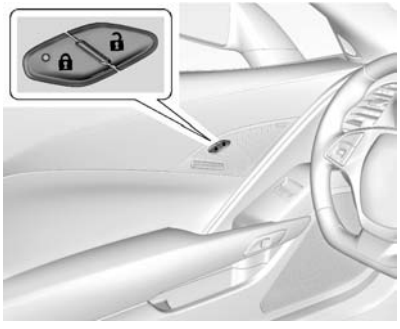

Driver Door

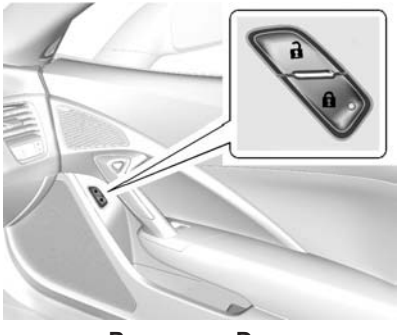

Passenger Door

To lock or unlock the doors and fuel door from inside the vehicle, press 🔒 or 🔓 on a power door lock switch. The indicator light in the switch will illuminate when the door is locked.

Delayed Locking

This feature delays the actual locking of the doors until five seconds after all doors are closed.

Delayed locking can only be turned on when the Unlocked Door Anti-Lockout feature has been turned off.

When 🔒 is pressed on the power door lock switch with the door open, a chime will sound three times indicating that delayed locking is active.

The doors will then lock automatically five seconds after all doors are closed. If a door is reopened before five seconds have elapsed, the five-second timer will reset once all the doors are closed again.

Press 🔒 on the door lock switch again, or press 🔒 on the RKE transmitter, to override this feature and lock the doors immediately.

Delayed locking can be programmed through the Driver Information Center (DIC). See *Vehicle Personalization on page 5-45*.

Automatic Door Locks

The vehicle is programmed so that when the doors are closed, the ignition is on, and the shift lever is moved out of P (Park) for automatic transmissions, or when vehicle speed becomes faster than 13 km/h (8 mph) for manual transmissions, both doors will lock.

Use the power door unlock switch to unlock the door when the vehicle is not in P (Park). When the door is closed again, the doors will lock

either when your foot is removed from the brake or the vehicle speed becomes faster than 13 km/h (8 mph).

Automatic Door Unlock

The vehicle is programmed so that when the shift lever is moved into P (Park) for automatic transmission vehicles or when the ignition is turned off or is in Retained Accessory Power (RAP) for manual transmission vehicles, both doors will unlock.

With the vehicle stopped and the engine running, door unlocking can be programmed through the Driver Information Center (DIC). This allows the driver to choose various unlock settings. For programming information, see *Vehicle Personalization on page 5-45*.

Lockout Protection

If the vehicle is in ACC/ACCESSORY or ON/RUN/START, and the power door lock switch is pressed with the driver door open, the doors will lock and only the driver door will unlock.

If the vehicle is off and Unlocked Door Anti-Lockout is turned on, the driver door is open, and door locking is requested using a door lock switch or the RKE transmitter, both doors will lock and only the driver door will unlock. The Unlocked Door Anti-Lockout feature can be turned on or off using the vehicle personalization menus.

See *Vehicle Personalization on page 5-45*.

Lockout protection can be manually overridden with the driver door open by pressing and holding 🔒 on the power door lock switch.

Doors

Hatch (Trunk)

⚠ Warning

Exhaust gases can enter the vehicle if it is driven with the liftgate, hatch/trunk open, or with any objects that pass through the seal between the body and the hatch/trunk or liftgate. Engine exhaust contains carbon monoxide (CO) which cannot be seen or smelled. It can cause unconsciousness and even death.

If the vehicle must be driven with the liftgate or hatch/trunk open:

- Close all of the windows.
- Fully open the air outlets on or under the instrument panel.

(Continued)

Warning (Continued)

- Adjust the climate control system to a setting that brings in only outside air and set the fan speed to the highest setting. See “Climate Control Systems” in the Index.
- If the vehicle is equipped with a power liftgate, disable the power liftgate function.

For more information about carbon monoxide, see *Engine Exhaust on page 9-26*.

Hatch/Trunk Release

For automatic transmissions, the vehicle must be in P (Park).

For manual transmissions, the vehicle must be off or stationary with the parking brake set. See *Electric Parking Brake on page 9-35*.

To release the hatch/trunk:

- Press .
- Press and hold HOLD on the Remote Keyless Entry (RKE) transmitter. See *Remote Keyless Entry (RKE) System on page 2-2*.

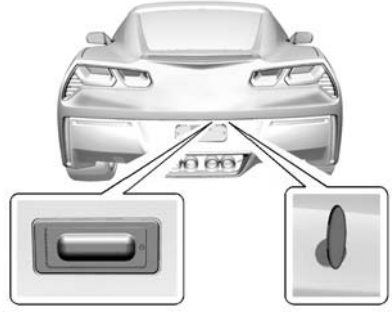

Press the hatch/trunk release touch pad with the RKE transmitter within range or use the key in the key cylinder. See *Keys on page 2-1*.

Hatch/Trunk Closing

⚠ Caution

Do not store heavy or sharp objects in the rear storage compartments located in the hatch/trunk area. The objects could damage the underside of the hatch/trunk.

Use the pull cup to close the hatch/ trunk with light force.

Emergency Trunk Release Handle (Convertible)

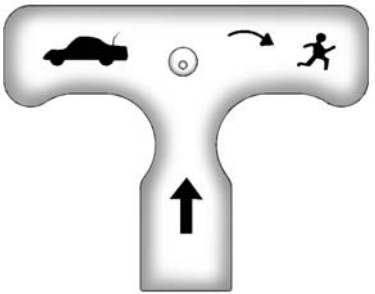

⚠ Caution

Do not use the emergency trunk release handle as a tie-down or anchor point when securing items in the trunk as it could damage the handle.

There is a glow-in-the-dark emergency trunk release handle on the trunk lid. This handle will glow following exposure to light. Pull the release handle to open the trunk from the inside.

After use, return to the stored position.

Vehicle Security

This vehicle has theft-deterrent features; however, they do not make the vehicle impossible to steal.

Vehicle Alarm System

This vehicle has an anti-theft alarm system.

The indicator light, on the instrument panel near the windshield, indicates the status of the system.

Off: Alarm system is disarmed.

On Solid: Vehicle is secured during the delay to arm the system.

Fast Flash: Vehicle is unsecured. A door, the hood, or the hatch/trunk is open.

Slow Flash: Alarm system is armed.

Arming the Alarm System

1. Turn off the vehicle.
2. Lock the vehicle in one of three ways:
   - Use the RKE transmitter.
   - Use the Keyless Access system.
   - With a door open, press 🔒 on the interior of the door.
3. After 30 seconds the alarm system will arm, and the indicator light will begin to slowly flash indicating the alarm system is operating. Pressing 🔒 on the RKE transmitter a second time will bypass the 30-second delay and immediately arm the alarm system.

The vehicle alarm system will not arm if the doors are locked with the key.

If the driver door is opened without first unlocking with the RKE transmitter, the horn will chirp and the lights will flash to indicate pre-alarm. If the vehicle is not started, or the door is not unlocked by pressing 🔓 on the RKE transmitter during the 10-second pre-alarm, the alarm will be activated.

The alarm will also be activated if the passenger door, the hatch/trunk, or the hood is opened without first disarming the system. When the alarm is activated, the turn signals flash and the horn sounds for about 30 seconds. The alarm system will then re-arm to monitor for the next unauthorized event.

Disarming the Alarm System

To disarm the alarm system or turn off the alarm if it has been activated, do one of the following:

- Press 🔓 on the RKE transmitter.
- Unlock the vehicle using the Keyless Access system.
- Start the vehicle.

To avoid setting off the alarm by accident:

- Lock the vehicle after all occupants have left the vehicle and both doors are closed.
- Always unlock a door with the RKE transmitter or use the Keyless Access system.

Unlocking the driver door with the key will not disarm the system or turn off the alarm.

How to Detect a Tamper Condition

If 🔓 is pressed on the transmitter and the horn chirps three times, a previous alarm occurred while the system was armed.

If the alarm has been activated, a message will appear on the DIC. See *Security Messages on page 5-42*.

Inclination Sensor and Intrusion Sensor

In addition to the standard theft-deterrent system features, this system may also have an inclination sensor and intrusion sensor.

The inclination sensor can set off the alarm if it senses movement of the vehicle, such as a change in vehicle orientation.

The intrusion sensor monitors the vehicle interior, and can activate the alarm if it senses unauthorized entry into the vehicle's interior. Do not allow passengers or pets to remain in the vehicle when the intrusion sensor is activated.

Before arming the theft-deterrent system and activating the intrusion sensor:

- Make sure both doors and windows are completely closed.
- Secure any loose items such as sunshades.
- Make sure there are no obstructions blocking the sensors.

Intrusion and Inclination Sensors Disable Switch

It is recommended that the intrusion and inclination sensors be deactivated if pets are left in the vehicle or the vehicle is being transported.

With the vehicle turned off, press OFF to the right of the hatch/trunk release button. The indicator light will come on momentarily, indicating that these sensors have been disabled for the next alarm system arming cycle.

Immobilizer

See *Radio Frequency Statement on page 13-12*.

Immobilizer Operation

The vehicle has a passive theft-deterrent system.

The security light comes on in the instrument cluster if there is a problem with arming or disarming the theft-deterrent system. This light also comes on briefly when the engine is started.

The system is automatically armed when the ignition is turned off.

The immobilization system is disarmed when the ignition is placed in ACC/ACCESSORY or ON/RUN/START and a valid transmitter is found in the vehicle.

You do not have to manually arm or disarm the system.

The system has one or more RKE transmitters that are matched to an immobilizer control unit in the vehicle. Only a correctly matched RKE transmitter starts the vehicle. The vehicle may not start if the RKE transmitter is damaged.

If the engine does not start and the security light comes on, there may be a problem with the immobilizer system. Press the ENGINE START/STOP button again.

If the vehicle does not start and the RKE transmitter appears to be undamaged, try another RKE transmitter. Or, place the transmitter in the transmitter pocket. See “NO REMOTE DETECTED” under *Key and Lock Messages on page 5-38*.

Check the fuse. See *Fuses on page 10-39*. If the engine still does not start with the other transmitter, the vehicle needs service. If the engine does start, the first transmitter may be faulty. See your dealer or have a new RKE transmitter programmed to the vehicle.

The immobilizer system can learn new or replacement RKE transmitters. Up to eight RKE transmitters can be programmed for the vehicle. To program additional transmitters, see “Programming Transmitters to the Vehicle” under *Remote Keyless Entry (RKE) System Operation on page 2-3*.

Do not leave the key or device that disarms or deactivates the theft-deterrent system in the vehicle.

Exterior Mirrors

Convex Mirrors

⚠ Warning

A convex mirror can make things, like other vehicles, look farther away than they really are. If you cut too sharply into the right lane, you could hit a vehicle on the right. Check the inside mirror or glance over your shoulder before changing lanes.

The passenger side mirror is convex shaped. A convex mirror's surface is curved so more can be seen from the driver seat.

Power Mirrors

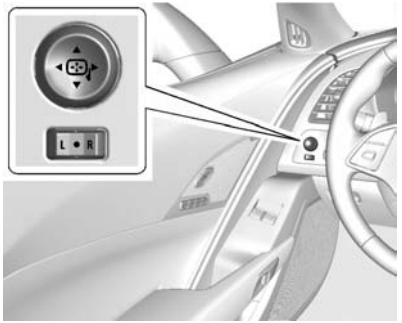

To adjust the mirrors:

1. Press L (Left) or R (Right) to select a mirror.
2. Press the control pad to adjust the mirror.
3. Return the switch to the center to deselect the mirror.

If the vehicle has the memory feature, a preferred mirror position can be stored. See *Memory Seats on page 3-4*.

Folding Mirrors

To fold, pull the mirror toward the vehicle. Push the mirror outward to return it to the original position.

Heated Mirrors

(Rear Window Defogger): Press to heat the mirrors.

See “Rear Window Defogger” under *Dual Automatic Climate Control System on page 8-1*.

Automatic Dimming Mirror

The driver outside mirror automatically adjusts for the glare of headlamps from behind.

Reverse Tilt Mirrors

If equipped with memory seats, the passenger and/or driver mirror tilts to a preselected position when the vehicle is in R (Reverse). This allows the curb to be seen when parallel parking.

The mirror(s) return to the original position when:

- The vehicle is shifted out of R (Reverse), or remains in R (Reverse) for about 30 seconds.
- The ignition is turned off.
- The vehicle is driven in R (Reverse) above a set speed.

To turn this feature on or off, see *Vehicle Personalization on page 5-45*.

Interior Mirrors

Interior Rearview Mirrors

Adjust the rearview mirror for a clear view of the area behind your vehicle.

If equipped with OnStar, there are three buttons at the bottom of the mirror. See your dealer for more information on the system and how to subscribe to OnStar. See *OnStar Overview on page 14-1*.

To avoid accidental OnStar calls, clean the mirror with the ignition off. Do not spray glass cleaner directly on the mirror. Use a soft towel dampened with water.

Manual Rearview Mirror

Push the tab forward for daytime use and pull it rearward for nighttime use to avoid glare of the headlamps from behind.

Automatic Dimming Rearview Mirror

If equipped, automatic dimming reduces the glare of headlamps from behind. The dimming feature comes on when the vehicle is started.

Windows

⚠ Warning

Never leave a child, a helpless adult, or a pet alone in a vehicle, especially with the windows closed in warm or hot weather. They can be overcome by the extreme heat and suffer permanent injuries or even death from heat stroke.

Power Windows

⚠ Warning

Leaving children in a vehicle with the Remote Keyless Entry (RKE) transmitter is dangerous for many reasons; children or others could be badly injured or even killed. They could operate the power windows or other controls or even make the vehicle move. The windows will function with the RKE transmitter in the vehicle and they could be seriously injured or killed if caught in the path of a closing window. Do not leave the RKE transmitter in a vehicle with children.

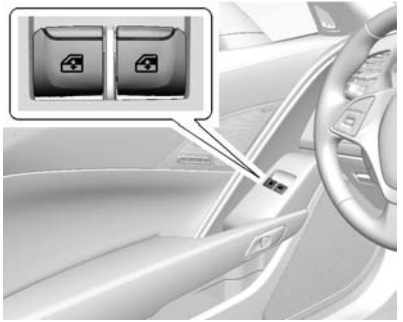

Press the switch to the first detent to lower the window. Pull to the first detent to raise the window. Release to stop at the desired position.

If windows are operated repeatedly in short intervals, window operation is disabled for a short time.

Retained Accessory Power (RAP) allows the use of the power windows when the ignition is off. See *Retained Accessory Power (RAP) on page 9-23*.

Express Window Operation

This feature allows the window to automatically open or close fully.

- To activate express-down, press the switch fully to the second detent and release.
- To activate express-up, pull the switch fully to the second detent and release.
- To stop window movement, press or pull the switch briefly.

Obstacle Detection

This feature is active during express-up movements in ON/RUN/START, or when the engine is off and RAP is active. Obstacle detection also works with RAP when the switch is held up.

If the window encounters an object during closing, it will stop and open to a predetermined distance.

Conditions such as severe cold or ice may cause the window to auto-reverse. The window will return to normal operation once the condition or object is removed.

If conditions prevent a window from closing and the window continues to auto-reverse, it is possible to close the window while in ON/RUN by holding the window switch in the first or second detent until the window is closed.

Window Operation with Convertible Top

Windows automatically lower fully when the convertible top is lowered or raised. See *Convertible Top on page 2-27*. To raise the windows, pull the switch to the second detent and release.

Window Indexing

Indexing automatically lowers the window a small amount when the door is opened. When the door is closed, the window will raise to its full up position. If either window does not index properly, it could be due to loss of power. Before returning to the dealer for service, perform the window indexing reset procedure.

Window Indexing and Express-Up Reset

Window indexing may be required if the vehicle battery has been recharged or disconnected, or is not working. Express-up and the convertible top will not function until the windows are reset. After battery power is restored, a message displays in the Driver Information Center. See *Driver Information Center (DIC) on page 5-26*.

Once power is restored:

1. Close the doors.
2. Start the vehicle.
3. Hold the window switch up to the fully closed position.

Sun Visors

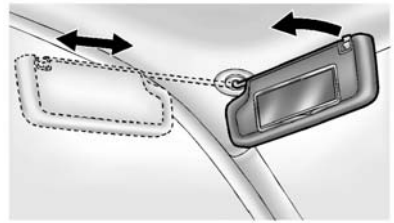

Pull the sun visor down to block glare. Detach the sun visor from the center mount to pivot to the side window or, if equipped, extend along the rod.

Roof

Roof Panel

If equipped with a removable roof panel, use the following procedures to remove or install it.

⚠ Caution

If a roof panel is dropped or rested on its edges, the roof panel, paint, and/or weatherstripping may be damaged. Always place the roof panel in the stowage receivers after removing it from the vehicle.

Removing the Roof Panel

⚠ Warning

Do not remove a roof panel while the vehicle is moving. The panel could fall into the vehicle and

(Continued)

Warning (Continued)

strike an occupant and cause you to lose control. It could also fly off and strike another vehicle. Remove the roof panel only when the vehicle is parked.

It may be necessary to have help removing the roof panel.

To remove:

1. Shift an automatic transmission into P (Park) or a manual transmission into 1 (First) or R (Reverse).
2. Turn the ignition off and set the parking brake.
3. Lower both sun visors.
4. Open the rear hatch and remove any items that may interfere with proper storage of the roof panel.
5. Lower the windows.

   There are two release handles on the front and one release handle on the rear of the roof panel.

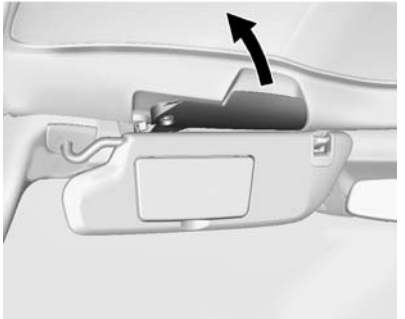

6. To unlock the front release handles, pull them outward, turning fully.

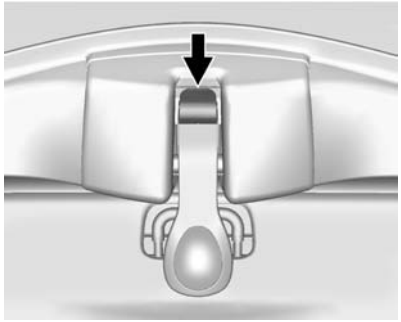

7. To unlock the rear release latch, press the button on the front of the release handle. The latch lever will open.
8. Stand on one side of the vehicle, and if necessary, have someone stand on the other side. Together, carefully lift the front edge of the roof panel up and forward. Avoid dropping the rear edge downward.
9. When the roof panel is loose, grasp it as close to the center as possible and lift it away from the vehicle.

Storing the Roof Panel

⚠ Warning

If a roof panel is not stored properly, it could be thrown about the vehicle in a crash or sudden maneuver. People in the vehicle could be injured. Always use the stowage receivers.

⚠ Caution

Dirt, dust, or other contaminants on the removable roof panel or cargo shade could cause damage to the finish of the roof panel if it is stored under the shade. Remove the cargo shade when storing the roof in the rear compartment.

1. Turn the roof panel so that the front edge of the panel is facing the front of the vehicle.

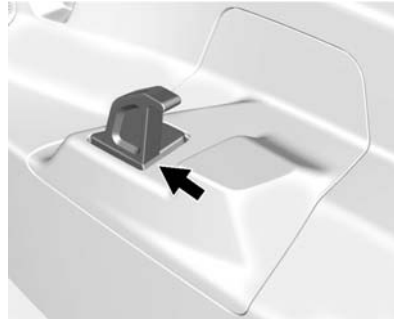

2. Insert the front of the roof panel so that the indents lay on top of the receivers.

3. Line up the rear roof panel pins so that they drop into the receivers on the back of the storage area.
4. Press down firmly to seat the pins in the rear receivers.

Installing the Roof Panel

⚠ Warning

An improperly attached roof panel may fall into or fly off the vehicle. You or others could be injured.

(Continued)

Warning (Continued)

After installing the roof panel, always check that it is firmly attached by pushing up on the underside of the panel. Check now and then to be sure the roof panel is firmly in place.

⚠ Caution

Installing the roof with the release handles in the closed position could cause damage to the interior trim. Always move handles to the open position when installing the roof.

It is easier if two people install the roof panel.

1. Shift an automatic transmission into P (Park). Shift a manual transmission into 1 (First) or R (Reverse).
2. Turn the ignition off and set the parking brake.
3. To remove the roof panel, pull up on the rear edge and remove it from the storage area.
4. Carefully place the roof panel over the top of the vehicle.

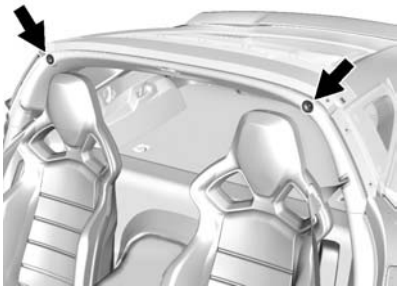

5. Position the rear edge of the roof panel next to the weatherstrip on the back of the roof opening. Then align and fit the pins at the rear of the roof panel inside the openings in the rear overhead

weatherstrip. Gently lower the front edge of the roof panel to the front of the roof opening.

6. Make sure the front release handles are in the full open position.
7. Push the roof firmly downward to engage the pins.
8. Turn the front release handles inward so that they fully latch to the closed position. It is critical that the handles fully latch.

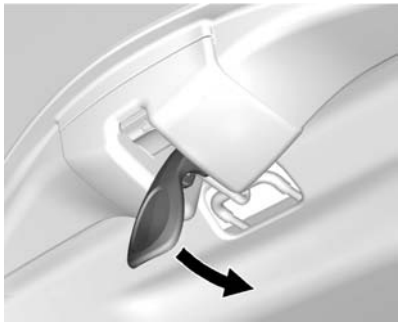

9. Push back and up on the rear release handle to insert the hook in the loop.
10. Push and pull the roof panel up and down and side to side to ensure the roof panel is securely installed.

Maintaining the Roof Panel

⚠ Caution

Using glass cleaner on a painted roof panel could damage the panel. The repairs would not be covered by the vehicle warranty. Do not use glass cleaner on the painted roof panel.

When cleaning, removing, and/or storing the roof panel:

- Flush with water to remove dust and dirt, then dry the panel.
- Do not use abrasive cleaning materials on the panel.

Convertible Top

If equipped with a convertible top, review the following before operating:

⚠ Warning

While opening or closing the convertible top, people can be injured by the moving parts of the tonneau cover or convertible top. Maintain visual contact with the top while it is being operated.

⚠ Caution

Follow these guidelines when operating the convertible top or damage can occur:

- Remove all items from the roof, trunk lid, or tonneau cover before operating.

(Continued)

Caution (Continued)

- Remove all objects from the trunk that may contact the convertible top when it is operated.
- Do not leave the vehicle with the convertible top open.
- Do not exceed 50 km/h (31 mph) until the top has completely closed or opened.
- Do not open or close the top while driving in high wind conditions.
- Do not operate the convertible top multiple times in a short period of time without starting the engine to avoid draining the vehicle battery.

(Continued)

Caution (Continued)

- Do not open or store the convertible top when it is dirty or wet. This could result in stains, mildew, or other damage.
- Only store the vehicle with the top fully closed.

Opening the Convertible Top — Instrument Panel Switch

1. Remove all objects from the top of the tonneau cover and forward of the partition. Place the partition in the rear storage area in the upright position. Fasten both sides of the partition to the posts just below the tonneau cover. See *Rear Storage on page 4-2*.
2. Close the trunk.
3. Start the vehicle or place it in ACC/ACCESSORY.
4. When possible, operate the convertible top when the vehicle is stopped. The top can be operated while driving below 50 km/h (31 mph) and will stop if that speed is exceeded. The top operation will take approximately 25 seconds. Make sure the top operation can be completed before that speed is reached.

5. Press and hold the bottom of . The windows will automatically lower.

6. After the convertible top is completely open, a chime sounds and a DIC message displays. Release the switch.

If the radio is on, the sound may be muted for a brief time due to a new audio system equalization being loaded.

Opening the Convertible Top — RKE Transmitter

1. Make sure the vehicle is off.
2. The trunk partition must already be in place and the trunk closed.
3. Keep visual contact with the vehicle. Press and release on the RKE transmitter and then quickly press and hold .
4. Hold until the top is completely opened and the exterior lamps flash. A chime will sound.

If the top stops before it has completely opened, press and then press again.

If the top still stops opening try the following:

- Move closer to the vehicle.
- Hold until the operation is complete.
- Interference from other RKE transmitters or devices may interrupt the operation. Press and then again. If the top still does not open use the convertible switch in the vehicle.

The convertible top cannot be closed using the RKE transmitter.

See *Rear Storage on page 4-2*.

See *Remote Keyless Entry (RKE) System Operation on page 2-3*.

Closing the Convertible Top

1. Remove all objects from the top of the tonneau cover and forward of the partition. Place the partition in the rear storage area in the upright position. Fasten both sides of the partition to the posts just below the tonneau cover. See *Rear Storage on page 4-2*.
2. Close the trunk.
3. Start the vehicle or place it in ACC/ACCESSORY.
4. When possible, operate the convertible top when the vehicle is stopped. The top can be operated while driving below 50 km/h (31 mph) and will stop if that speed is exceeded. The top operation will take approximately 25 seconds. Make sure the top operation can be completed before that speed is reached.

5. Press and hold the top of . The windows will automatically lower.
6. After the convertible top is completely closed, a chime sounds and a DIC message displays. Release the switch. Raise the windows if needed.

If the radio is on, the sound may be muted for a brief time due to a new audio system equalization being loaded.

Troubleshooting

Check the following if the convertible top switch is not operating:

- The ignition should be in ACC/ACCESSORY or ON/RUN/START, or Retained Accessory Power (RAP) should be active.
- The trunk lid should be closed and the trunk partition in place. A DIC message will display.
- If the ONLY MANUAL OPERATION OF TOP POSSIBLE message is displayed on the DIC, see “Manual Movement of Top” later in this section.
- At cooler outside temperatures, the convertible top may not open. It is possible to close the top down to temperatures of about −20°C (−4°F). A DIC message will display if the top will not open due to low temperature. If necessary, move the vehicle to a heated indoor area to operate the top.
- If the top has recently been cycled repeatedly or left in an intermediate state, it will be temporarily disabled. A DIC message displays. Normal operation will be restored within 10 minutes after the system has cooled.
- If the vehicle battery is low, the power top operation may be disabled. Try to start the vehicle. A DIC message displays.
- If the battery has recently been reconnected or if the vehicle has been jump started, the top may not operate until the power windows have been indexed. Complete the power window indexing procedure. See *Power Windows on page 2-22*.

See *Convertible Top Messages on page 5-35*.

Other features may be affected while operating the convertible top:

- The trunk can only be opened with the key until the convertible top is completely opened or closed.
- Do not try to start the vehicle while opening the top with the RKE transmitter. A DIC message may display. Release both buttons and wait a few seconds before starting the vehicle normally.
- The passive door unlock feature may not operate properly while using the RKE transmitter to open the convertible top.
- The windows cannot close while the top is moving.
- When driving with the top not fully secured, chimes can be heard above 80 km/h (50 mph).

If the vehicle battery has been disconnected and reconnected, the fuses were pulled or replaced, or a jump start was performed, the TOP NOT SECURE message may display. Press and hold to open/close the top until this message is cleared.

See *Convertible Top Messages on page 5-35*.

Partial Top Cycling

If the convertible top operation is stopped before completion, the top will temporarily hold its position. If the ignition is in ACC/ACCESSORY or ON/RUN/START, the top will be held for up to five minutes. If the vehicle is moving or off, the amount of time will vary from a few seconds to about a minute.

Beeps and DIC messages will be displayed before the top will move. When this occurs, immediately finish the convertible top operation by pressing the button again until it completes.

If the top cannot be secured, keep clear of the top components. In some conditions the top may move quickly.

Do not drive with the convertible top in an unsecured position. The top components may move unexpectedly. In some cases the top may not be able to be power operated. If this occurs, follow the DIC messages displayed.

If the tonneau cover is not secured and latched, and the vehicle is moving above 10 km/h (6 mph), the tonneau cover may automatically move to a stable position.

See *Convertible Top Messages on page 5-35*.

Manual Movement of Top

If the DIC displays the ONLY MANUAL OPERATION OF TOP POSSIBLE message, follow these steps.

1. Press to either open or close the top. Press the switch in the opposite direction if one does not work.
2. If the top moves, continue pressing the switch in that direction for at least five seconds. The top should then work normally.

If the top does not respond in either direction, use the following procedure to manually adjust the convertible top and tonneau cover if they are retracted but not latched. This requires more than one person.

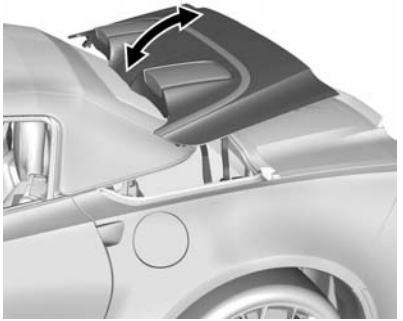

1. On each side of the tonneau cover, lift and pivot rearward into the fully open position.

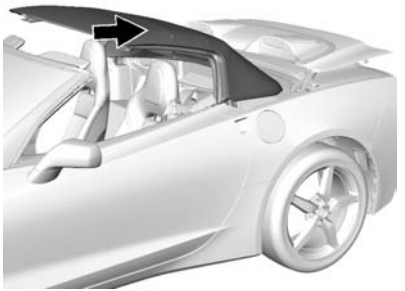

2. Lift and pivot the convertible top rearward into the fully stowed position.

If the convertible top does not operate after this adjustment, close the tonneau cover and take it to your dealer for service.

Cleaning the Convertible Top

The convertible top should be cleaned often. Do not use high-pressure car washes as these may cause water to enter the vehicle.

Hand wash the convertible top in partial shade. Use mild soap, lukewarm water, and a soft sponge. A chamois or cloth may leave lint on the top, and a brush can chafe the threads in the top fabric. Do not use detergents, harsh cleaners, solvents, or bleaching agents.

Wet the entire top and let the soap remain on the fabric for a few minutes. Wash evenly to avoid spots or rings. When the top is very dirty, use a mild foam-type cleaner. Thoroughly rinse the entire vehicle, then let the top dry in direct sunlight.

To protect the convertible top:

- Make sure the convertible top is completely dry before lowering it.
- Do not get any cleaner on the vehicle's painted finish; it could leave streaks.

✍ NOTES

Seats and Restraints

Head Restraints
Head Restraints 3-2

Front Seats
Power Seat Adjustment 3-2
Lumbar Adjustment 3-3
Reclining Seatbacks 3-3
Memory Seats 3-4
Seatback Latches 3-6
Heated and Ventilated Front Seats 3-7

Safety Belts
Safety Belts 3-8
How to Wear Safety Belts Properly 3-10
Lap-Shoulder Belt 3-11
Safety Belt Use During Pregnancy 3-13
Safety Belt Extender 3-13
Safety System Check 3-13
Safety Belt Care 3-14
Replacing Safety Belt System Parts after a Crash 3-14

Airbag System
Airbag System 3-15
Where Are the Airbags? 3-16
When Should an Airbag Inflate? 3-17
What Makes an Airbag Inflate? 3-18
How Does an Airbag Restrain? 3-18
What Will You See after an Airbag Inflates? 3-19
Passenger Sensing System 3-20
Servicing the Airbag-Equipped Vehicle 3-24
Adding Equipment to the Airbag-Equipped Vehicle . . . 3-25
Airbag System Check 3-25
Replacing Airbag System Parts after a Crash 3-26

Child Restraints
Older Children 3-26
Infants and Young Children 3-28
Child Restraint Systems 3-31
Lower Anchors and Tethers for Children (LATCH System) 3-32
Securing Child Restraints 3-33

Head Restraints

The vehicle's front seats have head restraints in the outboard seating positions that cannot be adjusted.

The front seat outboard head restraints are not removable.

Front Seats

Power Seat Adjustment

⚠ Warning

You can lose control of the vehicle if you try to adjust a driver seat while the vehicle is moving. Adjust the driver seat only when the vehicle is not moving.

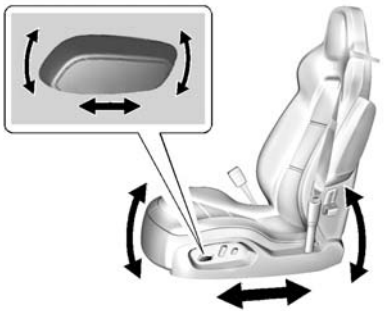

To adjust the seat:

- Move the seat forward or rearward by sliding the control forward or rearward.
- Raise or lower the front part of the seat cushion by moving the front of the control up or down.
- Raise or lower the seat by moving the rear of the control up or down.

To adjust the seatback, see *Reclining Seatbacks on page 3-3*.

To adjust the lumbar support, see *Lumbar Adjustment on page 3-3*.

Seat Travel Limit

If a seat is moved all the way to the rear and/or the seatback is reclined so that it makes contact with the carpet, all rearward seat movement will stop. Normal operation of the seat will resume when the seatback is no longer in contact with the carpet. This is normal.

If a seat is folded forward, all rearward or downward seat movement will stop. Normal operation will resume when the seat is returned to an upright position.

Lumbar Adjustment

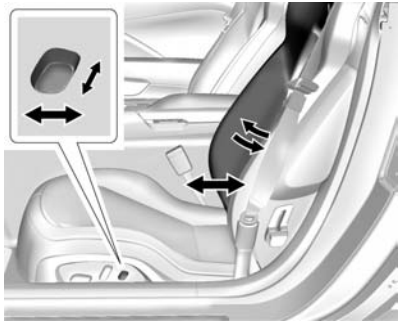

To adjust the lumbar and bolster support (if equipped):

- Press and hold the control forward to increase or rearward to decrease lumbar support.
- If equipped, press and hold the control upward to increase or downward to decrease the side bolster support.

Reclining Seatbacks

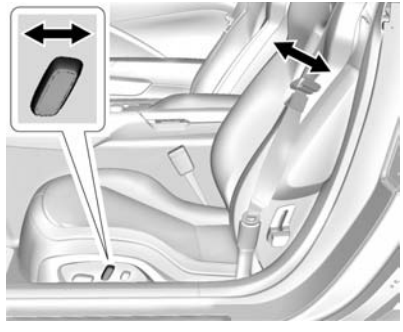

To adjust the seatback:

- Tilt the top of the control rearward to recline.
- Tilt the top of the control forward to raise.

⚠ Warning

Sitting in a reclined position when the vehicle is in motion can be dangerous. Even when buckled up, the safety belts cannot do their job.

For proper protection when the vehicle is in motion, have the seatback upright. Then sit well back in the seat and wear the safety belt properly.

Memory Seats

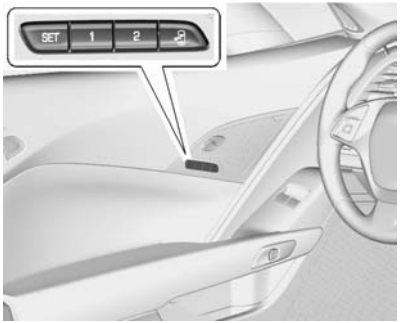

If memory equipped, the "1," "2," SET, and (Exit) buttons on the driver door are used to manually save and recall memory settings for the driver seat, outside mirrors, and power tilt and telescoping steering column.

Storing Memory Positions

To save positions to the “1” and “2” buttons:

1. Adjust the driver seat, outside mirrors, and the power tilt and telescoping steering column to the desired driving positions.
2. Press and release SET. A beep will sound.
3. Immediately press and hold “1” until two beeps sound.
4. Repeat Steps 1 and 2 for a second driver using “2.”

To save positions to the (Exit) button and easy exit features:

1. Adjust the driver seat, outside mirrors, and power tilt and telescoping steering column to the desired positions for getting out of the vehicle.
2. Press and release SET. A beep will sound.
3. Immediately press and hold until two beeps sound.

Manually Recalling Memory Positions

If the vehicle is OFF or not in P (Park), or parking brake is not set on a manual transmission, press and hold "1," "2," or to manually recall the previously stored memory positions. Releasing "1,” "2," or before the stored positions are reached stops the recall.

If the vehicle is ON and in P (Park), or parking brake is set on a manual transmission, press and release “1,” “2,” or to manually recall the previously stored memory positions. Placing the ignition in OFF before the stored positions are reached stops the recall.

Automatically Recalling Memory Positions (Auto Memory Recall)

The Auto (Automatic) Memory Recall feature automatically recalls the current driver’s previously stored “1” or “2” position when entering the vehicle.

Depending upon the Auto Memory Recall feature enabled in the vehicle personalization menu, memory “1” or “2” positions are recalled as follows:

To activate the recall when the ignition is off, and “On - Driver Door Open” is selected in the vehicle personalization menu:

- Press 🔓 on the RKE transmitter and open the door.
- Press the lock/unlock button on the outside driver door handle and open the driver door. The RKE transmitter must be present for the recall to activate.
- If the driver door is already open, press 🔓 on the RKE transmitter to activate the recall.

To activate the recall at ignition ON, the transmission must be in P (Park) or the parking brake set for a manual transmission, and “On - At Ignition On” selected in the vehicle personalization menu:

- Place the ignition in ON/RUN/START.

See *Vehicle Personalization on page 5-45*.

To stop recall movement, press one of the memory, power mirror, or power seat controls, or press the power tilt and telescoping steering column control. If On - At Ignition On is selected in the vehicle personalization menu, placing the ignition in OFF stops the recall.

Easy Exit Recall

If programmed on in the vehicle personalization menu, the easy exit feature automatically moves the driver seat, power tilt and telescoping steering column, and outside mirrors on some vehicles to the memory positions previously saved to the (Exit) button. See “Storing Memory Positions” listed previously. See also *Vehicle Personalization on page 5-45*.

Easy exit recall automatically activates when one of the following occurs:

- The vehicle is turned off and the driver door is opened within a short time.
- The vehicle is turned off with the driver door open.

Seat Travel Limit

If the seat is folded forward or moved rearward into contact with the carpet, the seat must be returned to an upright position or moved forward off the carpet to regain operation.

Obstructions

If something has blocked the driver seat and/or power tilt and telescoping steering column while recalling a memory position, the recall may stop. Remove the obstruction. Then do one of the following:

- If manually recalling the position, press and hold the appropriate manual control for the memory item that is not recalling for two seconds. Try recalling again by pressing the appropriate memory button.
- If automatically recalling the position, press and hold the appropriate manual control for the memory item that is not recalling for two seconds. Try recalling again by opening the driver door and pressing 🔓 on the RKE transmitter.
- If recalling the exit position, press and hold the appropriate manual control for the exit feature not recalling for two seconds. Then try recalling the exit position again.

If the memory position is still not recalling, see your dealer for service.

Seatback Latches

If equipped, lift the latch to fold a seatback forward.

⚠ Warning

If either seatback is not locked, it could move forward in a sudden stop or crash. That could cause injury to the person sitting there. Always push and pull on the seatbacks to be sure they are locked.

To return a seatback to the sitting position, push the seatback rearward. Push and pull on the seatback to make sure it is locked in place.

In some vehicles, when the seatback is folded forward, some power seat adjustments may not be available. See *Power Seat Adjustment on page 3-2* and *Reclining Seatbacks on page 3-3*.

Heated and Ventilated Front Seats

⚠ Warning

If you cannot feel temperature change or pain to the skin, the seat heater may cause burns. To reduce the risk of burns, people with such a condition should use care when using the seat heater, especially for long periods of time. Do not place anything on the seat that insulates against heat, such as a blanket, cushion, cover, or similar item. This may cause the seat heater to overheat. An overheated seat heater may cause a burn or may damage the seat.

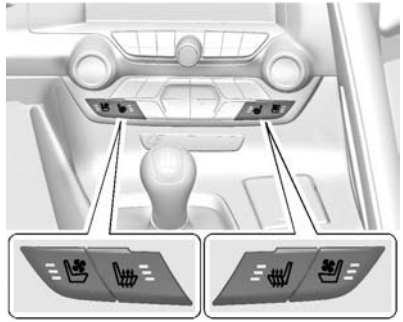

Driver and Redundant Passenger Controls

If equipped, the driver buttons are on the center stack. To operate, the ignition must be on.

Press ⁂ or ⁂ on the left side of the climate control panel to ventilate or heat the driver seat. A ventilated seat has a fan that pulls or pushes air through the seat. The air is not cooled.

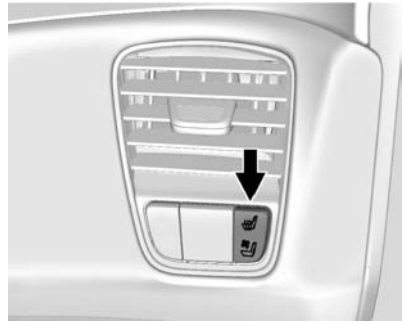

Passenger Controls

The passenger buttons are also on the right side of the instrument panel under the air vent. Press ⁂ or ⁂ to heat or ventilate the passenger seat. The driver can also turn on or off the passenger heated and ventilated seats using the buttons on the right side of the climate control panel.

Press the button once for the highest setting. With each press of the button, the seat will change to the next lower setting, and then to the off setting. The indicator lights

show three for the highest setting and one for the lowest. If the heated seats are on high, the level may automatically be lowered after approximately 30 minutes.

The passenger seat may take longer to heat up.

Remote Start Heated and Ventilated Seats

During a remote start (if equipped), the heated or ventilated seats can be turned on automatically. When it is cold outside, the heated seats turn on, and when it is hot outside the ventilated seats turn on. The heated or ventilated seats are canceled when the ignition is turned on. Press the heated or ventilated seat button to use the heated or ventilated seats after the vehicle is started.

The heated or ventilated seat indicator lights do not turn on during a remote start.

The temperature performance of an unoccupied seat may be reduced. This is normal.

The heated or ventilated seats will not turn on during a remote start unless they are enabled in the vehicle personalization menu. See *Remote Vehicle Start on page 2-9* and *Vehicle Personalization on page 5-45*.

Safety Belts

This section of the manual describes how to use safety belts properly. It also describes some things not to do with safety belts.

⚠ Warning

Do not let anyone ride where a safety belt cannot be worn properly. In a crash, if you or your passenger(s) are not wearing safety belts, injuries can be much worse than if you are wearing safety belts. You can be seriously injured or killed by hitting things inside the vehicle harder or by being ejected from the vehicle. In addition, anyone who is not buckled up can strike other passengers in the vehicle.

It is extremely dangerous to ride in a cargo area, inside or outside of a vehicle. In a collision, passengers riding in these areas

(Continued)

Warning (Continued)

are more likely to be seriously injured or killed. Do not allow passengers to ride in any area of the vehicle that is not equipped with seats and safety belts.

Always wear a safety belt, and check that all passenger(s) are restrained properly too.

This vehicle has indicators as a reminder to buckle the safety belts. See *Safety Belt Reminders on page 5-15*.

Why Safety Belts Work

When riding in a vehicle, you travel as fast as the vehicle does. If the vehicle stops suddenly, you keep going until something stops you. It could be the windshield, the instrument panel, or the safety belts!

When you wear a safety belt, you and the vehicle slow down together. There is more time to stop because you stop over a longer distance and, when worn properly, your strongest bones take the forces from the safety belts. That is why wearing safety belts makes such good sense.

Questions and Answers About Safety Belts

Q: Will I be trapped in the vehicle after a crash if I am wearing a safety belt?

A: You *could* be — whether you are wearing a safety belt or not. Your chance of being conscious during and after a crash, so you *can* unbuckle and get out, is *much* greater if you are belted.

Q: If my vehicle has airbags, why should I have to wear safety belts?

A: Airbags are supplemental systems only; so they work *with* safety belts — not instead of them. Whether or not an airbag is provided, all occupants still have to buckle up to get the most protection.

Also, in nearly all states and in all Canadian provinces, the law requires wearing safety belts.

How to Wear Safety Belts Properly

This section is only for people of adult size.

There are special things to know about safety belts and children. And there are different rules for smaller children and infants. If a child will be riding in the vehicle, see *Older Children on page 3-26* or *Infants and Young Children on page 3-28*. Follow those rules for everyone's protection.

It is very important for all occupants to buckle up. Statistics show that unbelted people are hurt more often in crashes than those who are wearing safety belts.

There are important things to know about wearing a safety belt properly.

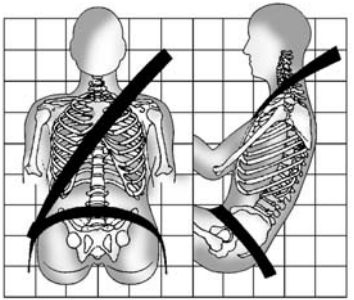

- Sit up straight and always keep your feet on the floor in front of you.
- Always use the correct buckle for your seating position.
- Wear the lap part of the belt low and snug on the hips, just touching the thighs. In a crash, this applies force to the strong pelvic bones and you would be less likely to slide under the lap belt. If you slid under it, the belt would apply force on your abdomen. This could cause serious or even fatal injuries.
- Wear the shoulder belt over the shoulder and across the chest. These parts of the body are best able to take belt restraining forces. The shoulder belt locks if there is a sudden stop or crash.

⚠ Warning

You can be seriously injured, or even killed, by not wearing your safety belt properly.

- Never allow the lap or shoulder belt to become loose or twisted.
- Never wear the shoulder belt under both arms or behind your back.
- Never route the lap or shoulder belt over an armrest.
- Always wear the shoulder belt over the shoulder and across the chest. Use the safety belt guide, if needed,

(Continued)

Warning (Continued)

to position the shoulder belt over the shoulder and across the chest.

Lap-Shoulder Belt

All seating positions in the vehicle have a lap-shoulder belt.

The following instructions explain how to wear a lap-shoulder belt properly.

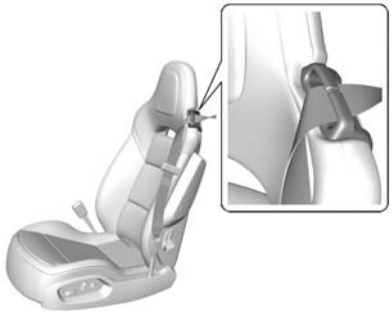

GT Seat Shown, Competition Sport Seat Similar

1. The seat has a safety belt guide. The safety belt guide helps position the shoulder belt over the shoulder and across the chest of smaller adults and of older children who have outgrown booster seats. To use the safety belt guide, slide the edge of the belt webbing through the opening on the guide. Be sure the belt is not twisted. If a child will be riding in the vehicle, see *Older Children on page 3-26* or *Infants and Young Children on page 3-28*.
2. Adjust the seat, if the seat is adjustable, so you can sit up straight. To see how, see “Seats” in the Index.

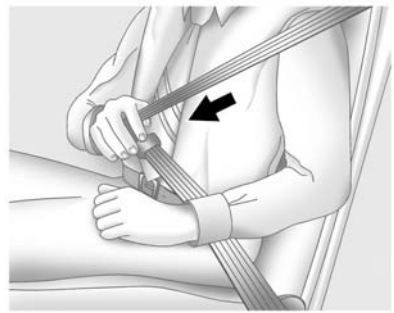

3. Pick up the latch plate and pull the belt across you. Do not let it get twisted.

   The lap-shoulder belt may lock if you pull the belt across you very quickly. If this happens, let the belt go back slightly to unlock it. Then pull the belt across you more slowly.

   If the shoulder portion of a passenger belt is pulled out all the way, the child restraint locking feature may be engaged. If this happens, let the belt go back all the way and start again.

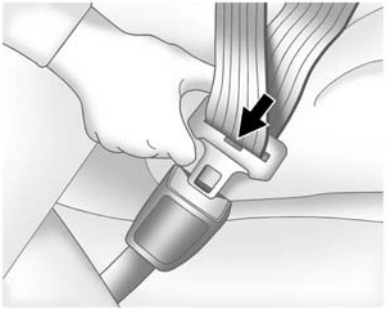

4. Push the latch plate into the buckle until it clicks.

   Pull up on the latch plate to make sure it is secure. If the belt is not long enough, see *Safety Belt Extender on page 3-13*.

   Position the release button on the buckle so that the safety belt could be quickly unbuckled if necessary.

5. To make the lap part tight, pull up on the shoulder belt.

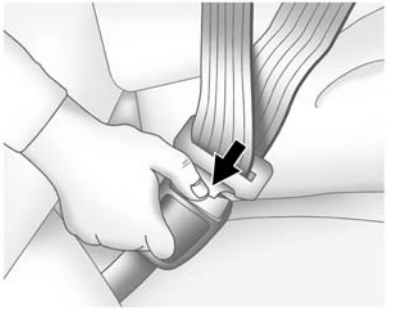

To unlatch the belt, push the button on the buckle. The belt should return to its stowed position.

Before a door is closed, be sure the safety belt is out of the way. If a door is slammed against a safety belt, damage can occur to both the safety belt and the vehicle.

Safety Belt Pretensioners

This vehicle has safety belt pretensioners for the front outboard occupants. Although the safety belt pretensioners cannot be seen, they are part of the safety belt assembly.

They can help tighten the safety belts during the early stages of a moderate to severe frontal, near frontal, or rear crash if the threshold conditions for pretensioner activation are met. Safety belt pretensioners can also help tighten the safety belts in a side crash or a rollover event.

Pretensioners work only once. If the pretensioners activate in a crash, the pretensioners and probably other parts of the vehicle's safety belt system will need to be replaced. See *Replacing Safety Belt System Parts after a Crash on page 3-14*.

Safety Belt Use During Pregnancy

Safety belts work for everyone, including pregnant women. Like all occupants, they are more likely to be seriously injured if they do not wear safety belts.

A pregnant woman should wear a lap-shoulder belt, and the lap portion should be worn as low as possible, below the rounding, throughout the pregnancy.

The best way to protect the fetus is to protect the mother. When a safety belt is worn properly, it is more likely that the fetus will not be hurt in a crash. For pregnant women, as for anyone, the key to making safety belts effective is wearing them properly.

Safety Belt Extender

If the vehicle's safety belt will fasten around you, you should use it.

But if a safety belt is not long enough, your dealer will order you an extender. When you go in to order it, take the heaviest coat you will wear, so the extender will be long enough for you. To help avoid personal injury, do not let someone else use it, and use it only for the seat it is made to fit. The extender has been designed for adults. Never use it for securing child seats. To wear it, attach it to the regular safety belt. See the instruction sheet that comes with the extender.

Safety System Check

Now and then, check that the safety belt reminder light, safety belts, buckles, latch plates, retractors, and anchorages are all working properly. Look for any other loose or damaged safety belt system parts that might keep a safety belt system from doing its job. See your dealer

to have it repaired. Torn or frayed safety belts may not protect you in a crash. They can rip apart under impact forces. If a belt is torn or frayed, get a new one right away.

Make sure the safety belt reminder light is working. See *Safety Belt Reminders on page 5-15*.

Keep safety belts clean and dry. See *Safety Belt Care on page 3-14*.

Safety Belt Care

Keep belts clean and dry.

⚠ Warning

Do not bleach or dye safety belts. It may severely weaken them. In a crash, they might not be able to provide adequate protection. Clean safety belts only with mild soap and lukewarm water.

Replacing Safety Belt System Parts after a Crash

⚠ Warning

A crash can damage the safety belt system in the vehicle. A damaged safety belt system may not properly protect the person using it, resulting in serious injury or even death in a crash. To help make sure the safety belt systems are working properly after a crash, have them inspected and any necessary replacements made as soon as possible.

After a minor crash, replacement of safety belts may not be necessary. But the safety belt assemblies that were used during any crash may have been stressed or damaged.

See your dealer to have the safety belt assemblies and safety belt guides inspected or replaced.

New parts and repairs may be necessary even if the safety belt system was not being used at the time of the crash.

Have the safety belt pretensioners checked if the vehicle has been in a crash, or if the airbag readiness light stays on after you start the vehicle or while you are driving. See *Airbag Readiness Light on page 5-16*.

Airbag System

The vehicle has the following airbags:

- A frontal airbag for the driver.
- A frontal airbag for the front outboard passenger.
- A seat-mounted side impact airbag for the driver.
- A seat-mounted side impact airbag for the front outboard passenger.

All vehicle airbags have the word AIRBAG on the trim or on a label near the deployment opening.

For frontal airbags, the word AIRBAG is on the center of the steering wheel for the driver and on the instrument panel for the front outboard passenger.

For seat-mounted side impact airbags, the word AIRBAG is on the side of the seatback closest to the door.

Airbags are designed to supplement the protection provided by safety belts. Even though today's airbags are also designed to help reduce the risk of injury from the force of an inflating bag, all airbags must inflate very quickly to do their job.

Here are the most important things to know about the airbag system:

⚠ Warning

You can be severely injured or killed in a crash if you are not wearing your safety belt, even with airbags. Airbags are designed to work with safety belts, not replace them. Also, airbags are not designed to inflate in every crash. In some crashes safety belts are the only restraint. See *When Should an Airbag Inflate? on page 3-17*.

(Continued)

Warning (Continued)

Wearing your safety belt during a crash helps reduce the chance of hitting things inside the vehicle or being ejected from it. Airbags are “supplemental restraints” to the safety belts. Everyone in the vehicle should wear a safety belt properly, whether or not there is an airbag for that person.

⚠ Warning

Because airbags inflate with great force and faster than the blink of an eye, anyone who is up against, or very close to, any airbag when it inflates can be seriously injured or killed. Do not sit unnecessarily close to any airbag, as you would be if sitting on the edge of the seat or leaning forward. Safety belts help keep

(Continued)

Warning (Continued)

you in position before and during a crash. Always wear the safety belt, even with airbags. The driver should sit as far back as possible while still maintaining control of the vehicle.

Occupants should not lean on or sleep against the door or side windows in seating positions with seat-mounted airbags.

⚠ Warning

Children who are up against, or very close to, any airbag when it inflates can be seriously injured or killed. Always secure children properly in the vehicle. To read how, see *Older Children on page 3-26* or *Infants and Young Children on page 3-28*.

There is an airbag readiness light on the instrument cluster which shows the airbag symbol.

The system checks the airbag electrical system for malfunctions. The light tells you if there is an electrical problem. See *Airbag Readiness Light on page 5-16*.

Where Are the Airbags?

The driver frontal airbag is in the center of the steering wheel.

The front outboard passenger frontal airbag is in the passenger side instrument panel.

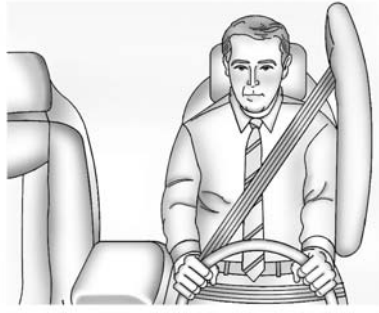

Driver Side Shown, Passenger Side Similar

The driver and front outboard passenger seat-mounted side impact airbags are in the side of the seatbacks closest to the door.

⚠ Warning

If something is between an occupant and an airbag, the airbag might not inflate properly or it might force the object into that person causing severe injury

(Continued)

Warning (Continued)

or even death. The path of an inflating airbag must be kept clear. Do not put anything between an occupant and an airbag, and do not attach or put anything on the steering wheel hub or on or near any other airbag covering.

Do not use seat accessories that block the inflation path of a seat-mounted side impact airbag.

When Should an Airbag Inflate?

This vehicle is equipped with airbags. See *Airbag System on page 3-15*. Airbags are designed to inflate if the impact exceeds the specific airbag system's deployment threshold. Deployment thresholds are used to predict how severe a crash is likely to be in time for the airbags to inflate and help restrain

the occupants. The vehicle has electronic sensors that help the airbag system determine the severity of the impact. Deployment thresholds can vary with specific vehicle design.

Frontal airbags are designed to inflate in moderate to severe frontal or near frontal crashes to help reduce the potential for severe injuries, mainly to the driver's or front outboard passenger's head and chest.

Whether the frontal airbags will or should inflate is not based primarily on how fast the vehicle is traveling. It depends on what is hit, the direction of the impact, and how quickly the vehicle slows down.

Frontal airbags may inflate at different crash speeds depending on whether the vehicle hits an object straight on or at an angle, and whether the object is fixed or moving, rigid or deformable, narrow or wide.

Frontal airbags are not intended to inflate during vehicle rollovers, in rear impacts, or in many side impacts.

In addition, the vehicle has advanced technology frontal airbags. Advanced technology frontal airbags adjust the restraint according to crash severity.

Seat-mounted side impact airbags are designed to inflate in moderate to severe side crashes depending on the location of the impact. Seat-mounted side impact airbags are not designed to inflate in frontal impacts, near frontal impacts, rollovers, or rear impacts.
A seat-mounted side impact airbag is designed to inflate on the side of the vehicle that is struck.

In any particular crash, no one can say whether an airbag should have inflated simply because of the vehicle damage or repair costs.

What Makes an Airbag Inflate?

In a deployment event, the sensing system sends an electrical signal triggering a release of gas from the inflator. Gas from the inflator fills the airbag causing the bag to break out of the cover. The inflator, the airbag, and related hardware are all part of the airbag module.

For airbag locations, see *Where Are the Airbags? on page 3-16*.

How Does an Airbag Restrain?

In moderate to severe frontal or near frontal collisions, even belted occupants can contact the steering wheel or the instrument panel. In moderate to severe side collisions, even belted occupants can contact the inside of the vehicle.

Airbags supplement the protection provided by safety belts by distributing the force of the impact more evenly over the occupant's body.

But airbags would not help in many types of collisions, primarily because the occupant's motion is not toward those airbags. See *When Should an Airbag Inflate? on page 3-17* for more information.

Airbags should never be regarded as anything more than a supplement to safety belts.

What Will You See after an Airbag Inflates?

After the frontal and seat-mounted side impact airbags inflate, they quickly deflate, so quickly that some people may not even realize the airbags inflated. Some components of the airbag module may be hot for several minutes. For location of the airbags, see *Where Are the Airbags? on page 3-16*.

The parts of the airbag that come into contact with you may be warm, but not too hot to touch. There may be some smoke and dust coming from the vents in the deflated airbags. Airbag inflation does not prevent the driver from seeing out of the windshield or being able to steer the vehicle, nor does it prevent people from leaving the vehicle.

⚠ Warning

When an airbag inflates, there may be dust in the air. This dust could cause breathing problems for people with a history of asthma or other breathing trouble. To avoid this, everyone in the vehicle should get out as soon as it is safe to do so. If you have breathing problems but cannot get out of the vehicle after an airbag inflates, then get fresh air by opening a window or a door. If you experience breathing

(Continued)

Warning (Continued)

problems following an airbag deployment, you should seek medical attention.

The vehicle has a feature that may automatically unlock the doors, turn on the interior lamps and hazard warning flashers, and shut off the fuel system after the airbags inflate. The feature may also activate, without airbag inflation, after an event that exceeds a predetermined threshold. You can lock the doors, and turn off the interior lamps and hazard warning flashers by using the controls for those features.

⚠ Warning

A crash severe enough to inflate the airbags may have also damaged important functions in the vehicle, such as the fuel

(Continued)

Warning (Continued)

system, brake and steering systems, etc. Even if the vehicle appears to be drivable after a moderate crash, there may be concealed damage that could make it difficult to safely operate the vehicle.

Use caution if you should attempt to restart the engine after a crash has occurred.

In many crashes severe enough to inflate the airbag, windshields are broken by vehicle deformation. Additional windshield breakage may also occur from the front outboard passenger airbag.

- Airbags are designed to inflate only once. After an airbag inflates, you will need some new parts for the airbag system. If you do not get them, the airbag system will not be there to help protect you in another crash. A new system will include airbag modules and possibly other parts. The service manual for the vehicle covers the need to replace other parts.
- The vehicle has a crash sensing and diagnostic module which records information after a crash. See *Vehicle Data Recording and Privacy on page 13-14* and *Event Data Recorders on page 13-14*.
- Let only qualified technicians work on the airbag system. Improper service can mean that the airbag system will not work properly. See your dealer for service.

Passenger Sensing System

The vehicle has a passenger sensing system for the front outboard passenger position. The passenger airbag status indicator will light on the instrument panel when the vehicle is started.

United States

Canada and Mexico

The words ON and OFF, or the symbol for on and off, will be visible during the system check. When the system check is complete, either the word ON or OFF, or the symbol for on or off, will be visible. See *Passenger Airbag Status Indicator on page 5-17*.

The passenger sensing system will turn off the front outboard passenger frontal airbag under certain conditions. No other airbag is affected by the passenger sensing system.

The passenger sensing system works with sensors that are part of the front outboard passenger seat and safety belt. The sensors are designed to detect the presence of a properly-seated occupant and determine if the front outboard passenger frontal airbag should be allowed to inflate or not.

According to accident statistics, children are safer when properly secured in a rear seat in the correct child restraint for their weight and size.

Rear-facing child restraints should not be transported in the vehicle, even if the airbag is off.

Never put a rear-facing child seat in the front. This is because the risk to the rear-facing child is so great, if the airbag inflates.

⚠ Warning

A child in a rear-facing child restraint can be seriously injured or killed if the passenger frontal airbag inflates. This is because the back of the rear-facing child restraint would be very close to the inflating airbag. A child in a forward-facing child restraint can be seriously injured or killed if the passenger frontal airbag inflates and the passenger seat is in a forward position.

Even if the passenger sensing system has turned off the passenger frontal airbag, no system is fail-safe. No one can guarantee that an airbag will not inflate under some unusual circumstance, even though the airbag is off.

(Continued)

Warning (Continued)

Secure rear-facing child restraints in a rear seat, even if the airbag is off. If you secure a forward-facing child restraint in the front outboard passenger seat, always move the seat as far back as it will go. It is better to secure the child restraint in a rear seat.

The passenger sensing system is designed to turn off the front outboard passenger frontal airbag if:

- The front outboard passenger seat is unoccupied.
- The system determines an infant is present in a child restraint.
- A front outboard passenger takes his/her weight off of the seat for a period of time.
- There is a critical problem with the airbag system or the passenger sensing system.

When the passenger sensing system has turned off the front outboard passenger frontal airbag, the off indicator will light and stay lit as a reminder that the airbag is off. See *Passenger Airbag Status Indicator on page 5-17*.

The passenger sensing system is designed to turn on the front outboard passenger frontal airbag anytime the system senses that a person of adult size is sitting properly in the front outboard passenger seat.

When the passenger sensing system has allowed the airbag to be enabled, the on indicator will light and stay lit as a reminder that the airbag is active.

For some children, including children in child restraints, and for very small adults, the passenger sensing system may or may not turn off the front outboard passenger frontal airbag, depending upon the person's seating posture and body build. Everyone in the vehicle who has outgrown child restraints should wear a safety belt properly — whether or not there is an airbag for that person.

⚠ Warning

If the airbag readiness light ever comes on and stays on, it means that something may be wrong with the airbag system. To help avoid injury to yourself or others, have the vehicle serviced right away. See *Airbag Readiness Light on page 5-16* for more information, including important safety information.

If the On Indicator Is Lit for a Child Restraint

The passenger sensing system is designed to turn off the front outboard passenger frontal airbag if the system determines that an infant is present in a child restraint. If a child restraint has been installed and the on indicator is lit:

1. Turn the vehicle off.
2. Remove the child restraint from the vehicle.
3. Remove any additional items from the seat such as blankets, cushions, seat covers, seat heaters, or seat massagers.
4. Reinstall the child restraint following the directions provided by the child restraint manufacturer and refer to *Securing Child Restraints on page 3-33*. Even if the child restraint is equipped with a safety belt lock-off, make sure the safety belt retractor is locked by pulling the shoulder belt all

the way out of the retractor before tightening the safety belt. When the retractor lock is set, the belt can be tightened but not pulled out of the retractor.

5. If, after reinstalling the child restraint and restarting the vehicle, the on indicator is still lit, turn the vehicle off. Then slightly recline the vehicle seatback and adjust the seat cushion, if adjustable, to make sure that the vehicle seatback is not pushing the child restraint into the seat cushion.
6. Restart the vehicle.

The passenger sensing system may or may not turn off the airbag for a child in a child restraint depending upon the child's size. It is better to secure the child restraint in a rear seat.

If the Off Indicator Is Lit for an Adult-Sized Occupant

If a person of adult size is sitting in the front outboard passenger seat, but the off indicator is lit, it could be because that person is not sitting properly in the seat or that the child restraint locking feature is engaged. Use the following steps to allow the system to detect that person and enable the front outboard passenger frontal airbag:

1. Turn the vehicle off.
2. Remove any additional material from the seat, such as blankets, cushions, seat covers, seat heaters, or seat massagers.
3. Place the seatback in the fully upright position.
4. Have the person sit upright in the seat, centered on the seat cushion, with legs comfortably extended.
5. If the shoulder portion of the belt is pulled out all the way, the child restraint locking feature will be engaged. This may unintentionally cause the passenger sensing system to turn the airbag off for some adult-sized occupants. If this happens, unbuckle the belt, let the belt go back all the way, and then buckle the belt again without pulling the belt out all the way.
6. Restart the vehicle and have the person remain in this position for two to three minutes after the on indicator is lit.

⚠ Warning

If the front outboard passenger airbag is turned off for an adult-sized occupant, the airbag will not be able to inflate and help protect that person in a crash, resulting in an increased risk of serious injury or even death. An adult-sized occupant should not ride in the front outboard passenger seat, if the passenger airbag off indicator is lit.

Additional Factors Affecting System Operation

Safety belts help keep the passenger in position on the seat during vehicle maneuvers and braking, which helps the passenger sensing system maintain the passenger airbag status. See “Safety Belts” and “Child Restraints” in the Index for additional information about the importance of proper restraint use.

A thick layer of additional material, such as a blanket or cushion, or aftermarket equipment such as seat covers, seat heaters, and seat massagers can affect how well the passenger sensing system operates. We recommend that you not use seat covers or other aftermarket equipment except when approved by GM for your specific vehicle. See *Adding Equipment to the Airbag-Equipped Vehicle on page 3-25* for more information about modifications that can affect how the system operates.

The on indicator may be lit if an object, such as a briefcase, handbag, grocery bag, laptop, or other electronic device, is put on an unoccupied seat. If this is not desired, remove the object from the seat.

⚠ Warning

Stowing of articles under the passenger seat or between the passenger seat cushion and seatback may interfere with the proper operation of the passenger sensing system.

Servicing the Airbag-Equipped Vehicle

Airbags affect how the vehicle should be serviced. There are parts of the airbag system in several places around the vehicle. Your dealer and the service manual have information about servicing the vehicle and the airbag system. To purchase a service manual, see *Service Publications Ordering Information on page 13-11*.

⚠ Warning

For up to 10 seconds after the vehicle is turned off and the battery is disconnected, an airbag can still inflate during improper service. You can be injured if you are close to an airbag when it inflates. Avoid yellow connectors. They are probably part of the airbag system. Be sure to follow proper service procedures, and make sure the person performing work for you is qualified to do so.

Adding Equipment to the Airbag-Equipped Vehicle

Adding accessories that change the vehicle's frame, bumper system, height, front end, or side sheet metal, may keep the airbag system from working properly. The operation of the airbag system can also be affected by changing or moving any parts of the front seats, safety belts, the airbag sensing and diagnostic module, steering wheel, instrument panel, roof-rail airbag modules, ceiling headliner or pillar garnish trim, front sensors, side impact sensors, or airbag wiring.

Your dealer and the service manual have information about the location of the airbag sensors, sensing and diagnostic module, and airbag wiring.

In addition, the vehicle has a passenger sensing system for the front outboard passenger position, which includes sensors that are part of the passenger seat. The passenger sensing system may not operate properly if the original seat trim is replaced with non-GM covers, upholstery, or trim; or with GM covers, upholstery, or trim designed for a different vehicle. Any object, such as an aftermarket seat heater or a comfort-enhancing pad or device, installed under or on top of the seat fabric, could also interfere with the operation of the passenger sensing system. This could either prevent proper deployment of the passenger airbag(s) or prevent the passenger sensing system from properly turning off the passenger airbag(s). See *Passenger Sensing System on page 3-20*.

If you have to modify your vehicle because you have a disability and you have questions about whether the modifications will affect the vehicle's airbag system, or if you have questions about whether the airbag system will be affected if the vehicle is modified for any other reason, call Customer Assistance. See *Customer Assistance Offices on page 13-3*.

Airbag System Check

The airbag system does not need regularly scheduled maintenance or replacement. Make sure the airbag readiness light is working. See *Airbag Readiness Light on page 5-16*.

⚠ Caution

If an airbag covering is damaged, opened, or broken, the airbag may not work properly. Do not open or break the airbag coverings. If there are any opened or broken airbag coverings, have the airbag covering and/or airbag module replaced. For the location of the airbags, see *Where Are the Airbags? on page 3-16*. See your dealer for service.

Replacing Airbag System Parts after a Crash

⚠ Warning

A crash can damage the airbag systems in the vehicle.
A damaged airbag system may not work properly and may not

(Continued)

Warning (Continued)

protect you and your passenger(s) in a crash, resulting in serious injury or even death. To help make sure the airbag systems are working properly after a crash, have them inspected and any necessary replacements made as soon as possible.

If an airbag inflates, you will need to replace airbag system parts. See your dealer for service.

If the airbag readiness light stays on after the vehicle is started or comes on when you are driving, the airbag system may not work properly. Have the vehicle serviced right away. See *Airbag Readiness Light on page 5-16*.

Child Restraints

Older Children

Older children who have outgrown booster seats should wear the vehicle safety belts.

The manufacturer instructions that come with the booster seat state the weight and height limitations for that booster. Use a booster seat with a lap-shoulder belt until the child passes the fit test below:

- Sit all the way back on the seat. Do the knees bend at the seat edge? If yes, continue. If no, return to the booster seat.
- Buckle the lap-shoulder belt. Does the shoulder belt rest on the shoulder? If yes, continue. If no, return to the booster seat.
- Does the lap belt fit low and snug on the hips, touching the thighs? If yes, continue. If no, return to the booster seat.
- Can proper safety belt fit be maintained for the length of the trip? If yes, continue. If no, return to the booster seat.

Q: What is the proper way to wear safety belts?

A: An older child should wear a lap-shoulder belt and get the additional restraint a shoulder belt can provide. The shoulder belt should not cross the face or neck. The lap belt should fit snugly below the hips, just touching the top of the thighs. This applies belt force to the child's pelvic bones in a crash. It should never be worn over the abdomen, which could cause severe or even fatal internal injuries in a crash.

According to accident statistics, children are safer when properly restrained in a rear seating position.

In a crash, children who are not buckled up can strike other people who are buckled up, or can be thrown out of the vehicle. Older children need to use safety belts properly.

⚠ Warning

Never allow more than one child to wear the same safety belt. The safety belt cannot properly spread the impact forces. In a crash, they can be crushed together and seriously injured. A safety belt must be used by only one person at a time.

⚠ Warning

Never allow a child to wear the safety belt with the shoulder belt behind their back. A child can be seriously injured by not wearing the lap-shoulder belt properly. In a crash, the child would not be restrained by the shoulder belt. The child could move too far forward increasing the chance of head and neck injury. The child might also slide under the lap belt. The belt force would then be applied right on the abdomen. That could cause serious or fatal injuries. The shoulder belt should go over the shoulder and across the chest.

Infants and Young Children

Everyone in a vehicle needs protection! This includes infants and all other children. Neither the distance traveled nor the age and size of the traveler changes the need, for everyone, to use safety restraints. In fact, the law in every state in the United States and in every Canadian province says children up to some age must be restrained while in a vehicle.

⚠ Warning

Children can be seriously injured or strangled if a shoulder belt is wrapped around their neck. The shoulder belt can tighten but cannot be loosened if it is locked. The shoulder belt locks when it is pulled all the way out of the retractor. It unlocks when the shoulder belt is allowed to go all the way back into the retractor, but it cannot do this if it is wrapped around a child's neck. If the shoulder belt is locked and tightened around a child's neck, the only way to loosen the belt is to cut it.

Never leave children unattended in a vehicle and never allow children to play with the safety belts.

Every time infants and young children ride in vehicles, they should have the protection provided by

appropriate child restraints. Neither the vehicle's safety belt system nor its airbag system is designed for them.

Children who are not restrained properly can strike other people, or can be thrown out of the vehicle.

⚠ Warning

Never hold an infant or a child while riding in a vehicle. Due to crash forces, an infant or a child will become so heavy it is not possible to hold it during a crash. For example, in a crash at only 40 km/h (25 mph), a 5.5 kg (12 lb) infant will suddenly become a 110 kg (240 lb) force on a person's arms. An infant should be secured in an appropriate restraint.

⚠ Warning

Children who are up against, or very close to, any airbag when it inflates can be seriously injured or killed. Never put a rear-facing child restraint in the front outboard seat. Secure a rear-facing child restraint in a rear seat. It is also better to secure a forward-facing child restraint in a rear seat. If you must secure a forward-facing child restraint in

(Continued)

Warning (Continued)

the front outboard seat, always move the front passenger seat as far back as it will go.

Q: What are the different types of add-on child restraints?

A: Add-on child restraints, which are purchased by the vehicle owner, are available in four basic types. Selection of a particular restraint should take into consideration not only the child's

weight, height, and age but also whether or not the restraint will be compatible with the motor vehicle in which it will be used.

For most basic types of child restraints, there are many different models available. When purchasing a child restraint, be sure it is designed to be used in a motor vehicle. If it is, the restraint will have a label saying that it meets federal motor vehicle safety standards.

The restraint manufacturer instructions that come with the restraint state the weight and height limitations for a particular child restraint. In addition, there are many kinds of restraints available for children with special needs.

⚠ Warning

To reduce the risk of neck and head injury during a crash, infants need complete support. In a crash, if an infant is in a rear-facing child restraint, the crash forces can be distributed across the strongest part of an infant's body, the back and shoulders. Infants should always be secured in rear-facing child restraints.

⚠ Warning

A young child's hip bones are still so small that the vehicle's regular safety belt may not remain low on the hip bones, as it should. Instead, it may settle up around the child's abdomen. In a crash, the belt would apply force on a body area that is unprotected by

(Continued)

Warning (Continued)

any bony structure. This alone could cause serious or fatal injuries. To reduce the risk of serious or fatal injuries during a crash, young children should always be secured in appropriate child restraints.

Child Restraint Systems

Rear-Facing Infant Seat

A rear-facing infant seat provides restraint with the seating surface against the back of the infant.

The harness system holds the infant in place and, in a crash, acts to keep the infant positioned in the restraint.

Forward-Facing Child Seat

A forward-facing child seat provides restraint for the child's body with the harness.

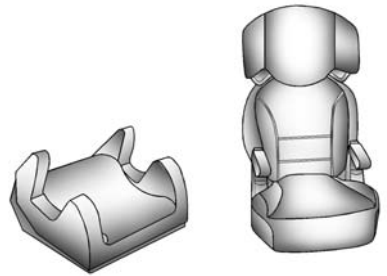

Booster Seats

A booster seat is a child restraint designed to improve the fit of the vehicle's safety belt system.
A booster seat can also help a child to see out the window.

Securing an Add-On Child Restraint in the Vehicle

⚠ Warning

A child can be seriously injured or killed in a crash if the child restraint is not properly secured in the vehicle. Secure the child restraint properly in the vehicle using the vehicle safety belt or LATCH system, following the instructions that came with that child restraint and the instructions in this manual.

To help reduce the chance of injury, the child restraint must be secured in the vehicle. Child restraint systems must be secured in vehicle seats by lap belts or the lap belt portion of a lap-shoulder belt. Children can be endangered in a crash if the child restraint is not properly secured in the vehicle.

When securing an add-on child restraint, refer to the instructions that come with the restraint which may be on the restraint itself or in a booklet, or both, and to this manual. The child restraint instructions are important, so if they are not available, obtain a replacement copy from the manufacturer.

Keep in mind that an unsecured child restraint can move around in a collision or sudden stop and injure people in the vehicle. Be sure to properly secure any child restraint in the vehicle — even when no child is in it.

In some areas of the United States and Canada, Certified Child Passenger Safety Technicians (CPSTs) are available to inspect and demonstrate how to correctly use and install child restraints. In the U.S., refer to the National Highway Traffic Safety Administration (NHTSA) website to locate the nearest child safety seat inspection station. For CPST availability in Canada, check with Transport Canada or the Provincial Ministry of Transportation office.

Securing the Child Within the Child Restraint

⚠ Warning

A child can be seriously injured or killed in a crash if the child is not properly secured in the child restraint. Secure the child properly following the instructions that came with that child restraint.

Lower Anchors and Tethers for Children (LATCH System)

Some child restraints have a LATCH system. As part of the LATCH system, your child restraint may have lower attachments and/or a top tether. The LATCH system can help hold the child restraint in place during driving or in a crash. Some vehicles have lower and/or top

tether anchors designed to secure a child restraint with lower attachments and/or a top tether.

Some child restraints with a top tether are designed to be used whether the top tether is anchored or not. Other child restraints require that the top tether be anchored. A national or local law may require that the top tether be anchored.

In Canada, the law requires that forward-facing child restraints have a top tether, and that the tether be attached.

Your vehicle does not have lower anchors or top tether anchors to secure a child restraint with the LATCH system. If a national or local law requires that your top tether be anchored, do not use a child restraint in this vehicle because a top tether cannot be properly anchored. You must use the safety belts to secure your child restraint in this vehicle, unless a national or local law requires that the top tether be anchored. Refer to the child restraint instructions and instructions in this manual for securing a child restraint using the vehicle's safety belts. See *Securing Child Restraints on page 3-33*.

Securing Child Restraints

This vehicle has airbags. In addition, the vehicle has a passenger sensing system which is designed to turn off the front outboard passenger frontal airbag under certain conditions. See *Passenger Sensing System on page 3-20* and *Passenger Airbag Status Indicator on page 5-17* for more information, including important safety information.

Never put a rear-facing child seat in the front. This is because the risk to the rear-facing child is so great if the airbag deploys.

⚠ Warning

A child in a rear-facing child restraint can be seriously injured or killed if the front outboard passenger frontal airbag inflates. This is because the back of the rear-facing child restraint would be very close to the inflating airbag. A child in a forward-facing child restraint can be seriously injured or killed if the front outboard passenger frontal airbag inflates and the passenger seat is in a forward position.

Even if the passenger sensing system has turned off the front outboard passenger frontal airbag, no system is fail-safe. No one can guarantee that an airbag will not deploy under some unusual circumstance, even though it is turned off.

(Continued)

Warning (Continued)

Secure rear-facing child restraints in a rear seat, even if the airbag is off. If you secure a forward-facing child restraint in the front seat, always move the front passenger seat as far back as it will go. It is better to secure the child restraint in a rear seat.

See *Passenger Sensing System on page 3-20* for additional information.

Rear-facing child restraints should not be installed in the vehicle, even if the airbag is off.

Do not secure a child seat in a position without a top tether anchor if a national or local law requires that the top tether be anchored, or if the instructions that come with the child restraint say that the top strap must be anchored.

In Canada, the law requires that forward-facing child restraints have a top tether, and that the tether be attached.

When using the lap-shoulder belt to secure the child restraint in this position, follow the instructions that came with the child restraint and the following instructions:

1. Move the seat as far back as it will go before securing the forward-facing child restraint.

   When the passenger sensing system has turned off the front outboard passenger frontal airbag, the off indicator on the passenger airbag status indicator should light and stay lit when you start the vehicle. See *Passenger Airbag Status Indicator on page 5-17*.

2. Put the child restraint on the seat.

   Remove the safety belt from the guide by sliding the webbing through the opening on the guide. Do not secure the child restraint with the safety belt routed through the guide.

3. Pick up the latch plate, and run the lap and shoulder portions of the vehicle's safety belt through or around the restraint. The child restraint instructions will show you how.

4. Push the latch plate into the buckle until it clicks.

   Position the release button on the buckle so that the safety belt could be quickly unbuckled if necessary.

5. Pull the shoulder belt all the way out of the retractor to set the lock. When the retractor lock is set, the belt can be tightened but not pulled out of the retractor.

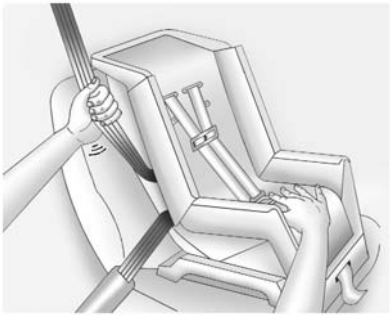

6. To tighten the belt, push down on the child restraint, pull the shoulder portion of the belt to tighten the lap portion of the belt, and feed the shoulder belt back into the retractor. When installing a forward-facing child restraint, it may be helpful to use your knee to push down on the child restraint as you tighten the belt.

   Try to pull the belt out of the retractor to make sure the retractor is locked. If the retractor is not locked, repeat Steps 5 and 6.

7. Before placing a child in the child restraint, make sure it is securely held in place. To check, grasp the child restraint at the safety belt path and attempt to move it side to side and back and forth. When the child restraint is properly installed, there should be no more than 2.5 cm (1 in) of movement.

If the airbag is off, the off indicator in the passenger airbag status indicator will come on and stay on when the vehicle is started.

If a child restraint has been installed and the on indicator is lit, see “If the On Indicator is Lit for a Child Restraint ” under *Passenger Sensing System on page 3-20* for more information.

To remove the child restraint, unbuckle the vehicle safety belt and let it return to the stowed position.

Return the safety belt into the guide by sliding the webbing through the opening on the guide.

✍ NOTES

Storage

Storage Compartments
Storage Compartments 4-1
Instrument Panel Storage 4-1
Glove Box 4-2
Cupholders 4-2
Rear Storage 4-2
Center Console Storage 4-3

Additional Storage Features
Cargo Cover 4-4
Convenience Net 4-5

Storage Compartments

⚠ Warning

Do not store heavy or sharp objects in storage compartments. In a crash, these objects may cause the cover to open and could result in injury.

Instrument Panel Storage

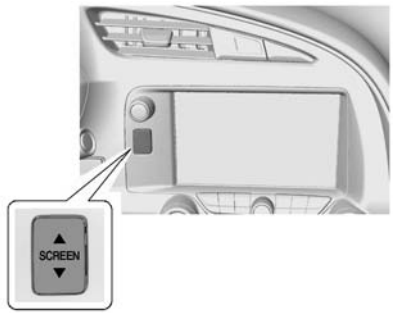

Press the button to lower the display and access the storage behind it.

There is a USB port in the upper left hand corner. See “Audio Players” in the infotainment manual.

Press the button again to raise the display and close the storage area.

The storage area cannot be operated when Valet Mode, if equipped, is enabled. See *Vehicle Personalization on page 5-45*.

Keep the storage area closed when not in use.

Glove Box

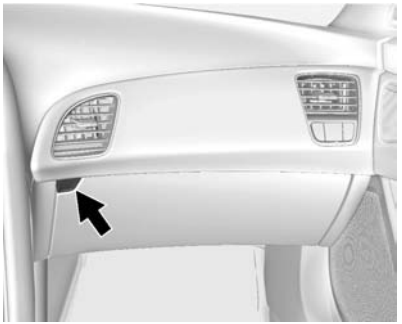

To open, press the button.
If equipped, the glove box locks when Valet Mode is enabled. See *Vehicle Personalization on page 5-45*.

Cupholders

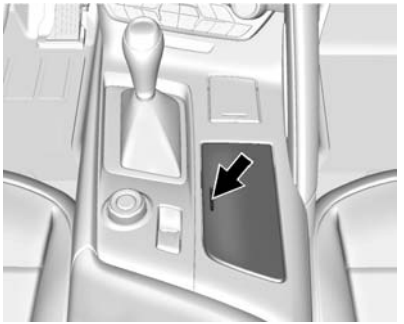

Press the top of the cover to access the cupholders. There is a removable divider.

Rear Storage

⚠ Caution

Do not store heavy or sharp objects in the rear storage compartments located in the

(Continued)

Caution (Continued)

hatch/trunk area. The objects could damage the underside of the hatch/trunk.

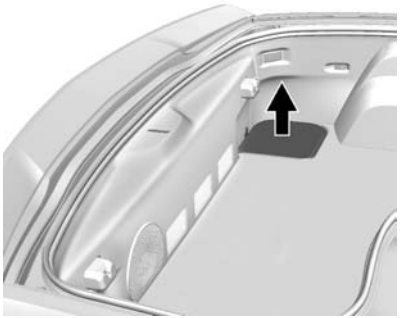

Convertible Shown, Coupe Similar

There is storage on the driver side in the floor of the hatch/trunk area. Pull up to open the cover.

Rear Trunk Partition

If equipped with a convertible top, there is a trunk partition to keep cargo from getting in the way of the

convertible top. The trunk partition must be in place for the convertible top to move. If the trunk partition is not properly in place, a message will display and a noise will be heard. See *Convertible Top Messages on page 5-35*.

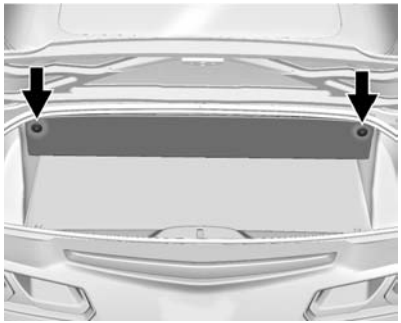

Convertible Only

Pull the divider up and snap it into place on both sides of the trunk.

The trunk partition is a flat carpeted board with a horizontal flap that can be attached to the top of the trunk to provide additional storage space.

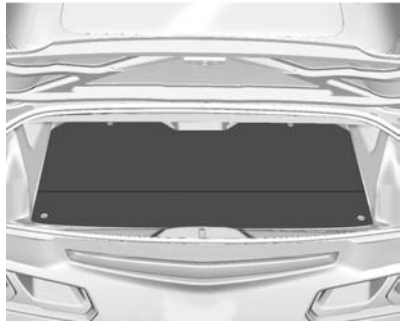

With the convertible top up, the trunk partition can be unsnapped and laid flat to increase trunk cargo space.

Center Console Storage

⚠ Caution

The area inside the console can get hot. Do not store items that can be damaged by heat.

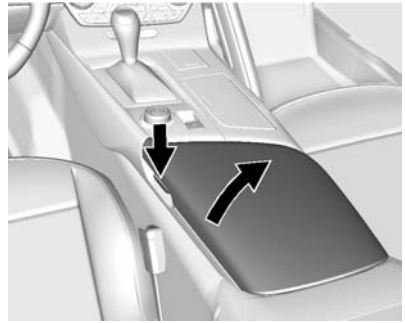

To open, press the button on the driver side.

There are two USB ports, an accessory outlet, and an SD card reader inside. See *Power Outlets on page 5-4* and “Audio Players” in the infotainment manual.

Additional Storage Features

Cargo Cover

If equipped, the cargo cover provides hidden storage in the rear area of the vehicle. The cover also blocks glare from the removable roof when it is stored in the rear compartment.

The cargo cover has two pieces: a flat and an L-shaped piece.

Attaching the Flat Cargo Cover

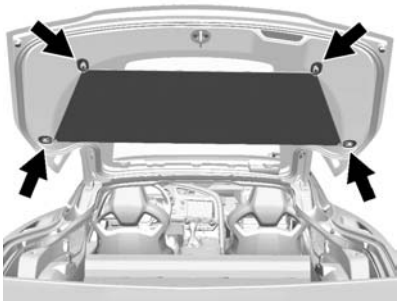

Attach the elastic loops on the four corners of the cargo cover to the hooks on the front and rear corners of the hatch.

Attaching the L-Shaped Cargo Cover

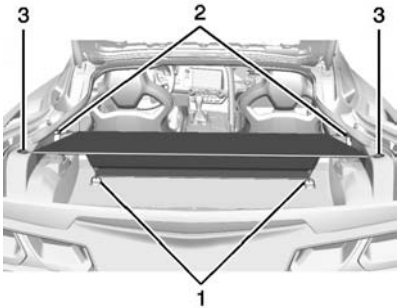

1. Attach the plastic loops on the cover to the tie-downs on the floor (1) and to the side panels (2).
2. Attach the rear loops on the cover to the hooks on the side panels (3).

Do not use the cargo cover hooks and tie-downs to secure anything but the cargo cover. They are not designed for heavy loads.

Convenience Net

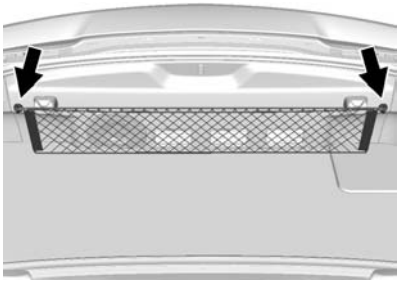

The vehicle may have a convenience net to be used for small loads. Attach the net to the hooks on the rear of the storage area. The net should not be used to store heavy loads.

✍ NOTES

Instruments and Controls

Controls

Steering Wheel Adjustment . . . 5-2
Steering Wheel Controls 5-2
Horn 5-2
Windshield Wiper/Washer 5-2
Compass 5-3
Clock 5-4
Power Outlets 5-4

Warning Lights, Gauges, and Indicators

Warning Lights, Gauges, and Indicators 5-6
Instrument Cluster 5-7
Speedometer 5-12
Odometer 5-12
Trip Odometer 5-12
Tachometer 5-12
Fuel Gauge 5-13
Boost Gauge 5-14
Engine Coolant Temperature Gauge 5-15
Safety Belt Reminders 5-15
Airbag Readiness Light 5-16
Passenger Airbag Status Indicator 5-17
Charging System Light 5-18
Malfunction Indicator Lamp 5-18
Brake System Warning Light 5-21
Electric Parking Brake Light 5-21
Service Electric Parking Brake Light 5-21
Antilock Brake System (ABS) Warning Light 5-22
Traction Off Light 5-22
StabiliTrak® OFF Light 5-23
Traction Control System (TCS)/StabiliTrak® Light 5-23
Engine Coolant Temperature Warning Light 5-23
Tire Pressure Light 5-24
Engine Oil Pressure Light 5-24
Low Fuel Warning Light 5-25
Security Light 5-25
High-Beam On Light 5-25
Lamps On Reminder 5-26
Cruise Control Light 5-26
Door Ajar Light 5-26

Information Displays

Driver Information Center (DIC) 5-26
Head-Up Display (HUD) 5-29

Vehicle Messages

Vehicle Messages 5-34
Battery Voltage and Charging Messages 5-34
Brake System Messages 5-34
Compass Messages 5-35
Convertible Top Messages . . . 5-35
Cruise Control Messages 5-36
Door Ajar Messages 5-36
Engine Cooling System Messages 5-37
Engine Oil Messages 5-37
Engine Power Messages 5-38
Fuel System Messages 5-38
Key and Lock Messages 5-38
Lamp Messages 5-39
Ride Control System Messages 5-39
Airbag System Messages 5-42
Security Messages 5-42
Service Vehicle Messages . . . 5-42
Starting the Vehicle Messages 5-43
Tire Messages 5-43

Transmission Messages 5-44
Vehicle Reminder Messages 5-44
Vehicle Speed Messages 5-44
Washer Fluid Messages 5-45
Window Messages 5-45

Vehicle Personalization
Vehicle Personalization 5-45

Universal Remote System
Universal Remote System . . . 5-52
Universal Remote System Programming 5-52
Universal Remote System Operation 5-55

Controls

Steering Wheel Adjustment

Press the control to move the tilt and telescoping steering wheel up and down or forward and rearward.

Both the tilt and telescoping steering column positions can be stored with your memory settings. See *Memory Seats on page 3-4*.

Do not adjust the steering wheel while driving.

Steering Wheel Controls

The infotainment system can be operated by using the steering wheel controls. See "Steering Wheel Controls" in the infotainment manual.

Horn

Press near or on the horn symbols on the steering wheel pad to sound the horn.

Windshield Wiper/Washer

The windshield wiper/washer lever is on the right side of the steering column.

With the ignition in ACC/ACCESSORY or ON/RUN/START, move the windshield wiper lever to select the wiper speed.

HI: Use for fast wipes.

LO: Use for slow wipes.

INT (Intermittent Wipes): Move the lever up to INT for intermittent wipes, then turn the INT band up for more frequent wipes or down for less frequent wipes.

OFF: Use to turn the wipers off.

1X (Mist): For a single wipe, briefly move the wiper lever down. For several wipes, hold the wiper lever down.

Clear snow and ice from the wiper blades and windshield before using them. If frozen to the windshield, carefully loosen or thaw them. Damaged blades should be replaced. See *Wiper Blade Replacement on page 10-36*.

Heavy snow or ice can overload the wiper motor.

Wiper Parking

If the ignition is put in OFF while the wipers are on LO, HI, or INT, they will immediately stop.

If the windshield wiper lever is then moved to OFF before the driver door is opened or within 10 minutes, the wipers will restart and move to the base of the windshield.

If the ignition is put in OFF while the wipers are performing wipes due to windshield washing, the wipers continue to run until they reach the base of the windshield.

(Windshield Washer): Pull the windshield wiper lever toward you to spray washer fluid and activate the wipers. The wipers will continue until the lever is released or the maximum wash time is reached. When the lever is released, additional wipes may occur depending on how long the windshield washer had been activated. See *Washer Fluid on page 10-28* for information on filling the windshield washer fluid reservoir.

⚠ Warning

In freezing weather, do not use the washer until the windshield is warmed. Otherwise the washer fluid can form ice on the windshield, blocking your vision.

Compass

The vehicle may have a compass display on the center stack. The compass receives its heading and other information from the Global

Positioning System (GPS) antenna, StabiliTrak®, and vehicle speed information.

The compass system is designed to operate for a certain number of miles or degrees of turn before needing a signal from the GPS satellites. When the compass display shows CAL, drive the vehicle for a short distance in an open area where it can receive a GPS signal. The compass system will automatically determine when a GPS signal is restored and provide a heading again. See *Compass Messages on page 5-35* for the messages that may be displayed for the compass.

Clock

The infotainment system controls are used to access the time and date settings through the menu system. See “Home Page” in the infotainment manual for information about how to use the menu system.

Setting the Time

To set the time:

1. From the Home Page, press the SETTINGS screen button and press Time and Date.
2. Press Set Time and press + or − to increase or decrease hours, minutes, and AM or PM. Press 12Hr or 24Hr for 12 or 24 hour clock.
3. Press ⬅ to go back to the previous menu.

If auto timing is set, the time displayed on the clock may not update immediately when driving into a new time zone.

To set the date:

1. Press the SETTINGS screen button and press Time and Date.
2. Press Set Date and press + or − to increase or decrease month, day, or year.
3. Press ⬅ to go back to the previous menu.

To set the clock display:

1. Press the SETTINGS screen button and press Time and Date.
2. Press Clock Display and press OFF or ON to turn the clock display off or on.
3. Press ⬅ to go back to the previous menu.

Power Outlets

Use the accessory power outlet to plug in electrical equipment, such as a cell phone or MP3 player.

There are three accessory power outlets:

- In front of the cupholder. Open the door compartment to access.
- Inside the center console storage compartment.
- In the rear compartment.

Lift the cover to access and replace when not in use.

The power outlets in front of the cupholder and inside the center console storage compartment are powered when the ignition is in ON/RUN/START or ACC/ACCESSORY, or until the driver door is opened within 10 minutes of turning off the vehicle. See *Retained Accessory Power (RAP) on page 9-23*.

The rear compartment power outlet is powered at all times. The vehicle's battery may run down if the power outlet is used while the ignition is in Stopping the Engine/OFF. Use this power outlet for plugging in the battery maintainer, if equipped.

⚠ Warning

Power is always supplied to the trunk outlet. Do not leave electrical equipment plugged in when the vehicle is not in use because the vehicle could catch fire and cause injury or death.

⚠ Caution

Leaving electrical equipment plugged in for an extended period of time while the vehicle is off will drain the battery. Always unplug electrical equipment when not in use and do not plug in equipment that exceeds the maximum 20 amp rating.

Certain electrical accessories may not be compatible with the accessory power outlet and could overload vehicle or adapter fuses. If a problem is experienced, see your dealer.

When adding electrical equipment, be sure to follow the proper installation instructions included with the equipment. See *Add-On Electrical Equipment on page 9-57*.

It is recommended that a qualified technician or dealer be seen for the proper installation of your equipment.

⚠ Caution

Hanging heavy equipment from the power outlet can cause damage not covered by the vehicle warranty. The power outlets are designed for accessory power plugs only, such as cell phone charge cords.

Warning Lights, Gauges, and Indicators

Warning lights and gauges can signal that something is wrong before it becomes serious enough to cause an expensive repair or replacement. Paying attention to the warning lights and gauges could prevent injury.

Warning lights come on when there could be a problem with a vehicle function. Some warning lights come on briefly when the engine is started to indicate they are working.

Gauges can indicate when there could be a problem with a vehicle function. Often gauges and warning lights work together to indicate a problem with the vehicle.

When one of the warning lights comes on and stays on while driving, or when one of the gauges shows there may be a problem, check the section that explains what to do. Waiting to do repairs can be costly and even dangerous.

Instrument Cluster

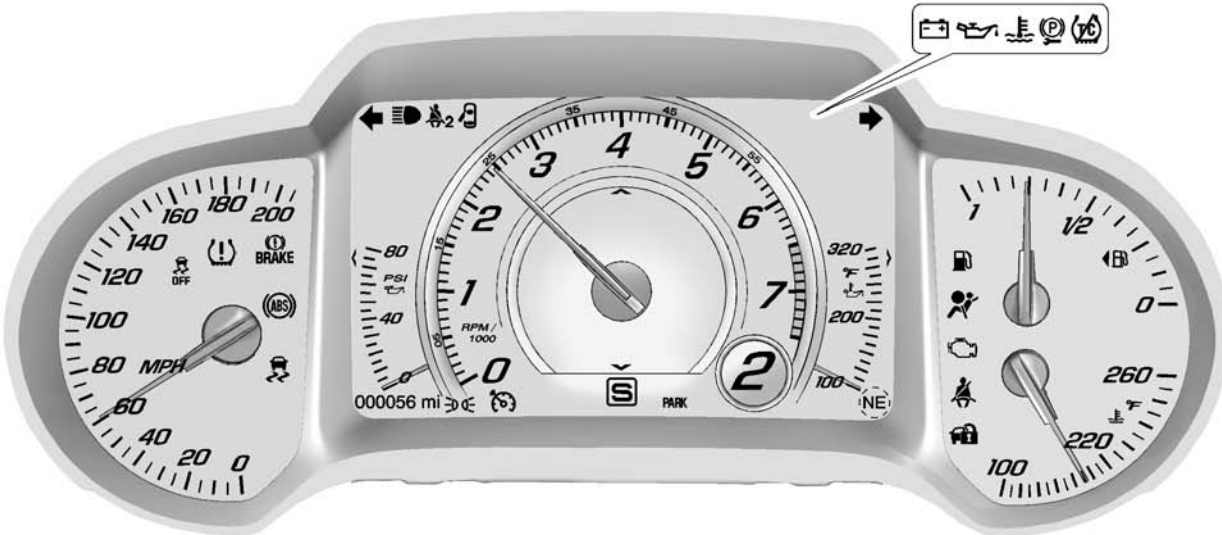

English Sport Theme Shown, Metric and Other Themes Similar

English Z06 Sport Theme Shown, Metric and Other Themes Similar

Reconfigurable Instrument Cluster

There are four instrument cluster display configurations to choose from: Link to Drive Mode, Sport, Track, and Tour. The style of the center of the instrument cluster will change depending on the theme selected. If Link to Drive Mode is chosen, the cluster configuration will change to match the setting on the driver mode control on the console. See *Driver Mode Control on page 9-39*. If Weather or Eco are selected with the driver mode control, the cluster will display the Tour theme.

Sport

Includes a circular tachometer centered in the display. The DIC is contained within the tachometer ring. Additionally, there are two configurable pocket gauges in the lower left and right corners.

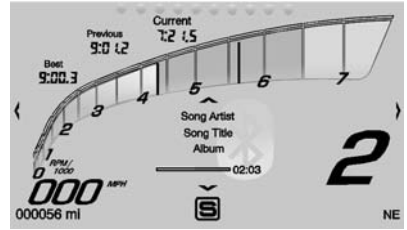

Track

Includes an asymmetric tachometer with prominent red-line markings and a lap timer that shows the current, previous, and best lap.

Tour

Includes a partial tachometer ring. The DIC is contained within the tachometer ring. There is also an

area used to display icons or images for the DIC or phone contacts.

The instrument cluster display configuration is selected through the cluster menu. See “Settings” under “Cluster Menu” following.

Cluster Menu

There is an interactive display area in the center of the instrument cluster.

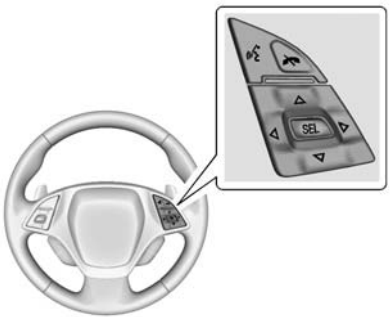

Use the right steering wheel control to open and scroll through the different items and displays.

Press ◁ to access the cluster applications. Use △ or ▽ to scroll through the list of applications.

- Info. This is where you can view the Driver Information Center (DIC) displays. See *Driver Information Center (DIC) on page 5-26*.
- Performance
- Audio
- Phone
- Navigation (If Equipped)
- Settings

Performance

Press SEL to enter the Performance menu. Use △ or ▽ to scroll through the available items.

G-force: Gives the driver an indication of the vehicle performance in cornering. The G-force is displayed in the center of the DIC as a numerical value.

Friction Bubble: A four quadrant visual display, indicative of the four corners of the car, with a “bubble” showing where the most inertia is being exerted on the vehicle.

Performance Timer: Press ▷ when Performance Timer is displayed to enter the menu. Press ▷ while Set Start Speed is highlighted then use △ or ▽ to enter the start speed. Press SEL to save it. Press ▷ while Set End Speed is highlighted then use △ or ▽ to enter the end speed. Press SEL to save it. After the start and end speeds have been entered, press ◁ to set the Sport display to the set speeds and the performance timer is ready to use. On the next acceleration, the performance time will record the time. To reset the

timer, highlight Reset on the performance timer menu and press SEL.

Lap Timer: Press ▷ when Lap Timer is displayed to start, stop, or reset the lap timer. A stopwatch icon will be displayed when the lap timer is active. Press SEL while the Lap Timer page is active to start the timer. If the lamp timer is active, pressing SEL on any page will stop the current lap timer and start a new lap. Also, pressing and holding SEL on any page will stop the lap timer.

Coolant Temperature: Shows the current coolant temperature in either degrees Celsius (°C) or degrees Fahrenheit (°F).

Oil Temperature: Shows the current oil temperature in either degrees Celsius (°C) or degrees Fahrenheit (°F).

Oil Pressure: Shows the current oil pressure in either kilopascal (kPa) or in pounds per square inch (psi).

Battery Voltage: Shows the current battery voltage.

Transmission Fluid Temperature: Shows the temperature of the transmission fluid in either degrees Celsius (°C) or degrees Fahrenheit (°F).

Tire Temperature: Shows tire temperature status as either Cold, Warm, or Hot. Warm is typical for normal driving while Hot is typical for aggressive driving. Unknown may be displayed if tire temperature information is unavailable.

eLSD and Wheel Slip: Displays when the Electronic Limited Slip Differential (eLSD) is active and intervening with the vehicle's normal operation. The display also displays slip percentage in a range of low, medium, and high. See *Limited-Slip Differential (Except Z51 and Z06) on page 9-47* or *Limited-Slip Differential (Z51 and Z06 Only) on page 9-47*.

Audio

While the audio app is open, use △ or ▽ to change the radio station or seek to the next or previous track, depending on the current audio source. Press SEL to enter the Audio menu. In the Audio menu browse for music, select from the favorites, or change the audio source.

Phone

Press SEL to enter the Phone menu. In the Phone menu, if there is no active phone call, view recent calls, or scroll through contacts. If there is an active call, mute or unmute the phone or switch to handset or hands-free operation.

Navigation

If equipped, press SEL to enter the Navigation menu. Displays a map or turn by turn directions. If there is no active route, press ▷ to resume the last route and turn the voice prompts on/off. If there is an active

route, press SEL to cancel route guidance or turn the voice prompts on/off.

Settings

Press SEL to enter the Settings menu. Use △ or ▽ to scroll through items in the Settings menu.

Units: Press ▷ while Units is displayed to enter the Units menu. Choose US or Metric units by pressing SEL while the desired item is highlighted.

Display Theme: Press ▷ to enter the Display Theme menu. Select from Link to Drive Mode, Track, Sport, or Tour for the cluster theme.

Speed Warning: The Speed Warning display allows the driver to set a speed that they do not want to exceed. To set the Speed Warning, press ▷ when Speed Warning is displayed. Enable the speed warning and then use △ or ▽ to adjust the value. Press SEL to set the speed. Once the speed is set, this feature can be turned off by pressing SEL while viewing this page. If the selected speed limit is exceeded, a pop-up warning is displayed with a chime.

Pocket Gauges: Press ▷ while Pocket Gauges is displayed to enter the menu and select gauges that can be displayed for the Sport theme on the left or right of the display area. Choose from Oil Pressure Gauge, Oil Temperature Gauge, Battery Voltage, Transmission Fluid Temperature Gauge, Horsepower, or a blank gauge.

Software Info: Press ▷ while Software Info is highlighted to display open source software information.

Speedometer

The speedometer shows the vehicle's speed in either kilometers per hour (km/h) or miles per hour (mph).

Odometer

The odometer shows how far the vehicle has been driven, in either kilometers or miles.

Trip Odometer

The trip odometer shows how far the vehicle has been driven since the trip odometer was last reset.

The trip odometer is accessed and reset through the Driver Information Center (DIC). See *Driver Information Center (DIC) on page 5-26*.

Tachometer

The tachometer displays the engine speed in revolutions per minute (rpm).

⚠ Caution

If the engine is operated with the rpm's in the warning area at the high end of the tachometer, the vehicle could be damaged, and the damage would not be covered by the vehicle warranty. Do not operate the engine with the rpm's in the warning area.

Fuel Gauge

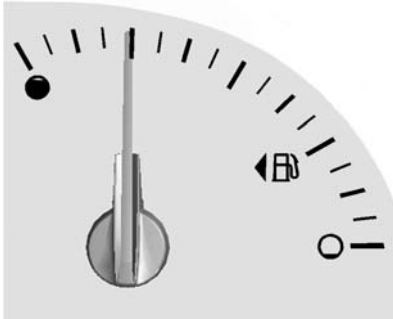

Metric

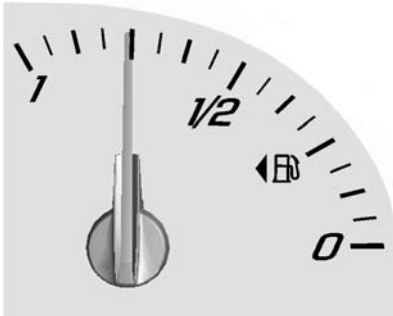

English

When the ignition is on, the fuel gauge indicates about how much fuel is left in the tank.

An arrow on the fuel gauge indicates the side of the vehicle the fuel door is on.

When the indicator nears empty, the low fuel light comes on. There is still a little fuel left, but the fuel tank should be filled soon.

Here are four things that some owners ask about. None of these show a problem with the fuel gauge:

- At the service station, the fuel pump shuts off before the gauge reads full.
- It takes a little more or less fuel to fill up than the gauge indicated. For example, the gauge indicated the tank was half full, but it actually took a little more or less than half the tank's capacity to fill the tank.
- The gauge moves a little while turning a corner or speeding up.

- The gauge takes a few seconds to stabilize after the ignition is turned on, and goes back to empty when the ignition is turned off.

Boost Gauge

Metric

English

This gauge indicates vacuum during light to moderate throttle and boost under heavier throttle.

It displays the air pressure level in the intake manifold before it enters the engine's combustion chamber.

The gauge is automatically centered at zero every time the engine is started. Actual vacuum or boost is displayed from this zero point. Changes in ambient pressure, such as driving in mountains and changing weather, will slightly change the zero reading.

Engine Coolant Temperature Gauge

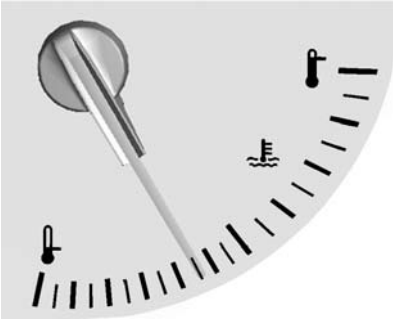

Metric

English

This gauge shows the engine coolant temperature.

If the gauge pointer moves to the high end, the engine is too hot.

This reading indicates the same thing as the warning light. It means that the engine coolant has overheated. If the vehicle has been operating under normal driving conditions, pull off the road, stop the vehicle, and turn off the engine as soon as possible. See *Engine Overheating on page 10-27* for more information.

Safety Belt Reminders

Driver Safety Belt Reminder Light

There is a driver safety belt reminder light on the instrument cluster.

When the vehicle is started, this light flashes and a chime may come on to remind the driver to fasten their safety belt. Then the light stays on solid until the belt is buckled. This cycle may continue several times if the driver remains or becomes unbuckled while the vehicle is moving.

If the driver safety belt is buckled, neither the light nor chime comes on.

Passenger Safety Belt Reminder Light

There is a passenger safety belt reminder light on the instrument panel cluster.

When the vehicle is started this light flashes and a chime may come on to remind passengers to fasten their safety belt. Then the light stays on solid until the belt is buckled. This cycle continues several times if the passenger remains or becomes unbuckled while the vehicle is moving.

If the passenger safety belt is buckled, neither the chime nor the light comes on.

The front passenger safety belt reminder light and chime may turn on if an object is put on the seat such as a briefcase, handbag, grocery bag, laptop or other electronic device. To turn off the reminder light and/or chime, remove the object from the seat or buckle the safety belt.

Airbag Readiness Light

This light shows if there is an electrical problem with the airbag system. The system check includes the airbag sensor(s), passenger sensing system, the pretensioners, the airbag modules, the wiring, and the crash sensing and diagnostic module. For more information on the airbag system, see *Airbag System on page 3-15*.

The airbag readiness light comes on for several seconds when the vehicle is started. If the light does not come on then, have it fixed immediately.

⚠ Warning

If the airbag readiness light stays on after the vehicle is started or comes on while driving, it means the airbag system might not be working properly. The airbags in the vehicle might not inflate in a crash, or they could even inflate without a crash. To help avoid injury, have the vehicle serviced right away.

If there is a problem with the airbag system, a Driver Information Center (DIC) message may also come on. See *Airbag System Messages on page 5-42*.

Passenger Airbag Status Indicator

The vehicle has a passenger sensing system. See *Passenger Sensing System on page 3-20* for important safety information. The passenger airbag status indicator is on the instrument panel.

United States

Canada and Mexico

When the vehicle is started, the passenger airbag status indicator will light ON and OFF, or the symbol for on and off, for several seconds as a system check. Then, after several more seconds, the status indicator will light either ON or OFF, or the on or off symbol, to let you know the status of the front outboard passenger frontal airbag.

If the word ON or the on symbol is lit on the passenger airbag status indicator, it means that the front outboard passenger frontal airbag is allowed to inflate.

If the word OFF or the off symbol is lit on the airbag status indicator, it means that the passenger sensing system has turned off the front outboard passenger frontal airbag.

If, after several seconds, both status indicator lights remain on, or if there are no lights at all, there may be a problem with the lights or the passenger sensing system. See your dealer for service.

⚠ Warning

If the airbag readiness light ever comes on and stays on, it means that something may be wrong

(Continued)

Warning (Continued)

with the airbag system. To help avoid injury to yourself or others, have the vehicle serviced right away. See *Airbag Readiness Light on page 5-16* for more information, including important safety information.

Charging System Light

The charging system light comes on briefly when the ignition is turned on, but the engine is not running, as a check to show the light is working. It should go out when the engine is started.

If the light stays on or comes on while driving, there may be a problem with the electrical charging system. Have it checked by your dealer. Driving while this light is on could drain the battery.

When this light comes on, the Driver Information Center (DIC) also displays a message.

See *Battery Voltage and Charging Messages on page 5-34*.

If a short distance must be driven with the light on, be sure to turn off all accessories, such as the radio and air conditioner.

Malfunction Indicator Lamp

A computer system called OBD II (On-Board Diagnostics-Second Generation) monitors the operation of the vehicle to ensure emissions are at acceptable levels, helping to maintain a clean environment. The malfunction indicator lamp comes on when the vehicle is placed in Service Only Mode, as a check to show it is working. If it does not, have the vehicle serviced by your dealer. See *Ignition Positions on page 9-19*.

If the malfunction indicator lamp comes on while the engine is running, this indicates that there is an OBD II problem and diagnosis and service might be required.

Malfunctions often are indicated by the system before any problem is apparent. Being aware of the light can prevent more serious damage to the vehicle. This system also assists the service technician in correctly diagnosing any malfunction.

⚠ Caution

If the vehicle is continually driven with this light on, the emission controls might not work as well, the vehicle fuel economy might not be as good, and the engine might not run as smoothly. This could lead to costly repairs that might not be covered by the vehicle warranty.

⚠ Caution

Modifications made to the engine, transmission, exhaust, intake, or fuel system of the vehicle or the replacement of the original tires with other than those of the same Tire Performance Criteria (TPC) can affect the vehicle's emission controls and can cause this light to come on. Modifications to these systems

(Continued)

Caution (Continued)

could lead to costly repairs not covered by the vehicle warranty. This could also result in a failure to pass a required Emission Inspection/Maintenance test. See *Accessories and Modifications on page 10-2*.

This light comes on during a malfunction in one of two ways:

Light Flashing: A misfire condition has been detected. A misfire increases vehicle emissions and could damage the emission control system on the vehicle. Diagnosis and service might be required.

To prevent more serious damage to the vehicle:

- Reduce vehicle speed.
- Avoid hard accelerations.
- Avoid steep uphill grades.

If the light continues to flash, stop and park the vehicle. Turn the vehicle off, wait at least 10 seconds, and restart the engine. If the light is still flashing, follow the previous steps and see your dealer for service as soon as possible.

Light On Steady: An emission control system malfunction has been detected on the vehicle. Diagnosis and service might be required.

The following may correct an emission control system malfunction:

- If fuel has been added to the vehicle using the capless funnel adapter, make sure the capless funnel adapter is removed. See “Filling the Tank with a Portable Gas Can” under *Filling the Tank on page 9-55*. The diagnostic system can detect if the adapter has been left installed in the vehicle, allowing fuel to evaporate into the atmosphere.

A few driving trips with the adapter removed should turn off the light.

- Check that good quality fuel is used. Poor fuel quality causes the engine not to run as efficiently as designed and may cause stalling after start-up, stalling when the vehicle is changed into gear, misfiring, hesitation on acceleration, or stumbling on acceleration. These conditions might go away once the engine is warmed up.

If one or more of these conditions occurs, change the fuel brand used. It may require at least one full tank of the proper fuel to turn the light off.

See *Fuel on page 9-53*.

If none of the above have made the light turn off, your dealer can check the vehicle. The dealer has the proper test equipment and diagnostic tools to fix any mechanical or electrical problems that might have developed.

Emissions Inspection and Maintenance Programs

Depending on where you live, your vehicle may be required to participate in an emission control system inspection and maintenance program. For the inspection, the emission system test equipment will likely connect to the vehicle's Data Link Connector (DLC).

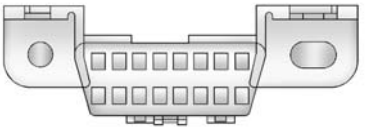

The DLC is under the instrument panel near the hood release. See your dealer if assistance is needed.

The vehicle may not pass inspection if:

- The malfunction indicator lamp is on with the engine running, or if the vehicle is placed in Service Only Mode and the malfunction indicator lamp does not come on. See your dealer for assistance in verifying proper operation of the malfunction indicator lamp.
- The OBD II (On-Board Diagnostics) system determines that critical emission control systems have not been completely diagnosed. The vehicle would be considered not ready for inspection. This can happen if the 12-volt battery has recently been replaced or run down. The diagnostic system is designed to evaluate critical emission control systems during normal driving. This can take several days of routine driving. If this has been done and the vehicle still does not pass the inspection for lack of OBD II system readiness, your dealer can prepare the vehicle for inspection.

Brake System Warning Light

The vehicle brake system consists of two hydraulic circuits. If one circuit is not working, the remaining circuit can still work to stop the vehicle. For normal braking performance, both circuits need to be working.

If the warning light comes on, there is a brake problem. Have the brake system inspected right away.

Metric

English

This light comes on briefly when the vehicle is turned on. If it does not come on then, have it fixed so it will be ready to warn if there is a problem.

If the light comes on and stays on, there is a base brake problem.

> **⚠ Warning**
>
> The brake system might not be working properly if the brake system warning light is on. Driving with the brake system warning light on can lead to a crash. If the light is still on after the vehicle has been pulled off the road and carefully stopped, have the vehicle towed for service.

Electric Parking Brake Light

Metric

English

This light comes on when the parking brake is applied. If the light continues flashing after the parking brake is released, or while driving, there is a problem with the Electric Parking Brake system or another system. A message may also display in the Driver Information Center (DIC). See *Brake System Messages on page 5-34*.

If the light does not come on, or remains flashing, see your dealer.

Service Electric Parking Brake Light

The service electric parking brake light should come on briefly when the vehicle is in ON/RUN. If it does not come on, have the vehicle serviced by your dealer.

If this light stays on, there is a problem with a system on the vehicle that is causing the parking

brake system to work at a reduced level. The vehicle can still be driven, but should be taken to a dealer as soon as possible. See *Electric Parking Brake on page 9-35*. If a message displays in the Driver Information Center (DIC), see *Brake System Messages on page 5-34*.

Antilock Brake System (ABS) Warning Light

This light comes on briefly when the engine is started.

If the light does not come on, have it fixed so it will be ready to warn if there is a problem.

If the light comes on while driving, stop as soon as it is safely possible and turn off the vehicle. Then start the engine again to reset the system. If the ABS light stays on, or comes on again while driving, the vehicle needs service. A chime may also sound when the light comes on steady.

If the ABS light is the only light on, the vehicle has regular brakes, but the antilock brakes are not functioning.

If both the ABS and the brake system warning light are on, the vehicle's antilock brakes are not functioning and there is a problem with the regular brakes. See your dealer for service.

See *Brake System Warning Light on page 5-21* and *Brake System Messages on page 5-34*.

Traction Off Light

This light comes on briefly while starting the engine. If it does not, have the vehicle serviced by your dealer. If the system is working normally, the indicator light then turns off.

The traction off light comes on when the Traction Control System (TCS) has been turned off by pressing and releasing the TCS/StabiliTrak button.

This light and the StabiliTrak OFF light come on when StabiliTrak is turned off.

If the TCS is off, wheel spin is not limited. Adjust driving accordingly.

See *Traction Control/Electronic Stability Control on page 9-37*.

StabiliTrak® OFF Light

This light comes on briefly while starting the engine. If it does not, have the vehicle serviced by your dealer.

This light comes on when the StabiliTrak system is turned off. If StabiliTrak is off, the Traction Control System (TCS) is also off.

If the StabiliTrak and TCS are off, the system does not assist in controlling the vehicle. Turn on the TCS and the StabiliTrak systems and the warning light turns off.

See *Traction Control/Electronic Stability Control on page 9-37*.

Traction Control System (TCS)/StabiliTrak® Light

This light comes on briefly when the engine is started.

If the light does not come on, have the vehicle serviced by your dealer. If the system is working normally, the indicator light turns off.

If the light is on and not flashing, the TCS and potentially the StabiliTrak system have been disabled. A DIC message may display. Check the DIC messages to determine which feature(s) is no longer functioning and whether the vehicle requires service.

If the indicator/warning light is on and flashing, the TCS and/or the StabiliTrak system is actively working.

See *Traction Control/Electronic Stability Control on page 9-37*.

Engine Coolant Temperature Warning Light

This light comes on briefly while starting the vehicle.

If it does not, have the vehicle serviced by the dealer. If the system is working normally the indicator light goes off.

⚠ Caution

The engine coolant temperature warning light indicates that the vehicle has overheated. Driving with this light on can damage the engine and it may not be covered by the vehicle warranty. See *Engine Overheating on page 10-27*.

The engine coolant temperature warning light comes on when the engine has overheated.

If this happens, pull over and turn off the engine as soon as possible. See *Engine Overheating on page 10-27*.

Tire Pressure Light

For vehicles with the Tire Pressure Monitor System (TPMS), this light comes on briefly when the engine is started. It provides information about tire pressures and the TPMS.

When the Light Is On Steady

This indicates that one or more of the tires are significantly underinflated.

A Driver Information Center (DIC) tire pressure message may also display. See *Tire Messages on page 5-43*. Stop as soon as possible, and inflate the tires to the pressure value shown on the Tire and Loading Information label. See *Tire Pressure on page 10-55*.

When the Light Flashes First and Then Is On Steady

If the light flashes for about a minute and then stays on, there may be a problem with the TPMS. If the problem is not corrected, the light will come on at every ignition cycle. See *Tire Pressure Monitor Operation on page 10-58*.

Engine Oil Pressure Light

⚠ Caution

Lack of proper engine oil maintenance can damage the engine. Driving with the engine oil low can also damage the engine. The repairs would not be covered by the vehicle warranty. Check the oil level as soon as possible. Add oil if required, but if the oil level is within the operating range and the oil pressure is still low, have the vehicle serviced. Always follow the maintenance schedule for changing engine oil.

This light should come on briefly as the engine is started. If it does not come on, have the vehicle serviced by your dealer.

If the light comes on and stays on, it means that oil is not flowing through the engine properly. The vehicle could be low on oil and might have some other system problem. See your dealer.

Low Fuel Warning Light

This light is near the fuel gauge and comes on briefly when the ignition is turned on as a check to show it is working.

It also comes on when the fuel tank is low on fuel. The light turns off when fuel is added. If it does not, have the vehicle serviced.

Security Light

The security light should come on briefly as the engine is started. If it does not come on, have the vehicle serviced by your dealer. If the system is working normally, the indicator light turns off.

If the light stays on and the engine does not start, there could be a problem with the theft-deterrent system. See *Immobilizer Operation on page 2-18*.

High-Beam On Light

This light comes on when the high-beam headlamps are in use.

See *Headlamp High/Low-Beam Changer on page 6-2*.

Lamps On Reminder

This light comes on when the exterior lamps are in use. See *Exterior Lamp Controls on page 6-1*.

Cruise Control Light

For vehicles with cruise control, the cruise control light is white when the cruise control is on and ready, and turns green when the cruise control is set and active.

The light turns off when the cruise control is turned off. See *Cruise Control on page 9-48*.

Door Ajar Light

This light comes on when a door is open or not securely latched. Before driving, check that all doors are properly closed.

Information Displays

Driver Information Center (DIC)

The DIC displays are shown in the center of the instrument cluster in the Info application. See *Instrument Cluster on page 5-7*. The Info application is only available when the vehicle is in ON/RUN. The displays show the status of many vehicle systems. The controls for the DIC are on the right steering wheel control.

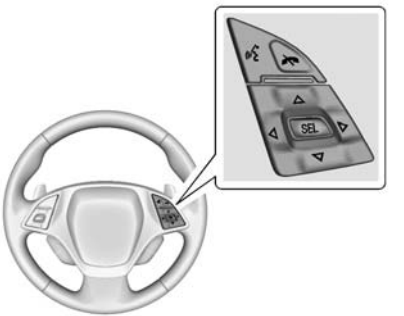

△ or ▽ : Press to move up or down in a list.

◁ or ▷ : Press ◁ to open application menus on the left. Press ▷ to open interaction menus on the right.

SEL (Select): Press to open a menu or select a menu item. Press and hold to reset values on certain screens.

DIC Info Pages

The following is the list of all possible DIC info displays. Depending on the vehicle, some may not be available.

Current Speed: Displays the vehicle speed in either kilometers per hour (km/h) or miles per hour (mph).

Trip A or B/Average Fuel Economy/Average Speed: Trip displays the current distance traveled, in either kilometers (km) or miles (mi), since the trip odometer was last reset. The trip odometer can be reset by pressing and holding SEL while this display is active.

Average Fuel Economy displays the approximate average liters per 100 kilometers (L/100 km) or miles per gallon (mpg). This number is calculated based on the number of L/100 km (mpg) recorded since the last time this menu item was reset. This number reflects only the approximate average fuel economy that the vehicle has right now, and will change as driving conditions change. The Average Fuel Economy can be reset by pressing and holding SEL while this display is active.

Average Speed displays the average speed of the vehicle in kilometers per hour (km/h) or miles per hour (mph). This average is calculated based on the various vehicle speeds recorded since the last reset of this value. The average speed can be reset by pressing and holding SEL while this display is active.

Fuel Range/Instantaneous Fuel Economy: Fuel Range displays the approximate distance the vehicle can be driven without refueling. LOW will be displayed when the vehicle is low on fuel. The fuel range estimate is based on an average of the vehicle's fuel economy over recent driving history and the amount of fuel remaining in the fuel tank.

Instantaneous Fuel Economy displays the current fuel economy in either liters per 100 kilometers (L/100 km) or miles per gallon (mpg). This number reflects only the approximate fuel economy that the vehicle has right now and changes frequently as driving conditions change.

This display may also show the number of cylinders the vehicle is running on. See *Active Fuel Management® on page 9-25*.

Oil Life: Displays an estimate of the oil's remaining useful life. If REMAINING OIL LIFE 99% is displayed, that means 99% of the current oil life remains.

When the remaining oil life is low, the CHANGE ENGINE OIL SOON message will appear on the display. See *Engine Oil Messages on page 5-37*. The oil should be changed as soon as possible. See *Engine Oil on page 10-12*. In addition to the engine oil life system monitoring the oil life, additional maintenance is recommended in the Maintenance Schedule. See *Maintenance Schedule on page 11-2*.

The Oil Life display must be reset after each oil change. It will not reset itself. Do not reset the Oil Life display accidentally at any time other than when the oil has just been changed. It cannot be reset accurately until the next oil change. To reset the engine oil life system, press and hold SEL for several seconds while the Oil Life display is active. See *Engine Oil Life System on page 10-18*.

Tire Pressure: Displays the approximate pressures of all four tires. Tire pressure is displayed in either kilopascal (kPa) or in pounds per square inch (psi). If the pressure is low, the value for that tire is shown in amber. See *Tire Pressure Monitor System on page 10-57* and *Tire Pressure Monitor Operation on page 10-58*.

Best Average Fuel Economy: Displays the average fuel economy, the best fuel economy over the selected distance, and a bar graph showing instantaneous fuel economy. Press ▷ to change the selected distance.

Fuel Used/Timer: Displays the approximate liters (L) or gallons (gal) of fuel that have been used since last reset. The fuel used can be reset by pressing and holding SEL while this display is active.

This display can also be used as a timer. To start/stop the timer, press ▷ while this display is active and then SEL to start/stop the timer. The display will show the amount of time that has passed since the timer was last reset. To reset the timer to zero, press and hold SEL or use ▷ to access the menu while this display is active.

ECO Index: Aids the driver in determining how efficiently they are driving.

This display may also show the number of cylinders the vehicle is running on. See *Active Fuel Management® on page 9-25*.

Speed Limit: Displays sign information, which comes from a roadway database in the onboard navigation.

Engine Hours/Lifetime Revs: Displays the total number of hours the engine has run. It also shows total engine revolutions divided by 10,000.

Head-Up Display (HUD)

⚠ Warning

If the HUD image is too bright, or too high in your field of view, it may take you more time to see things you need to see when it is dark outside. Be sure to keep the HUD image dim and placed low in your field of view.

If equipped with HUD, some information concerning the operation of the vehicle is projected onto the windshield.

The HUD information appears as an image focused out toward the front of the vehicle.

⚠ Caution

If you try to use the HUD image as a parking aid, you may misjudge the distance and damage your vehicle. Do not use the HUD image as a parking aid.

The HUD information can be displayed in various languages. The speedometer reading and other numerical values can be displayed in either English or metric units.

The language selection is changed through the radio and the units of measurement is changed through the instrument cluster. See *Vehicle Personalization on page 5-45* and “Settings” under *Instrument Cluster on page 5-7*.

The HUD may display different alerts and information for vehicles equipped with these features:

- Speedometer
- Tachometer
- Manual Transmission Gear (If Equipped)
- Manual Paddle Shift Gear Indicator (If Equipped)

  These displays on the HUD are for use when using the manual paddle shift controls to shift the transmission. See “Manual Paddle Shift” in *Automatic Transmission on page 9-27*.
- Shift Light

  This light is used for performance driving to indicate that the vehicle's best performance level has been reached to shift the transmission into the next higher gear. An arrow pointing up will light up on the display just prior to reaching the engine fuel cut-off mode.
- G-Force Gauge
- Audio Information
- Upcoming Maneuver from OnBoard Navigation

- Upcoming Maneuver from OnStar
- Incoming Call

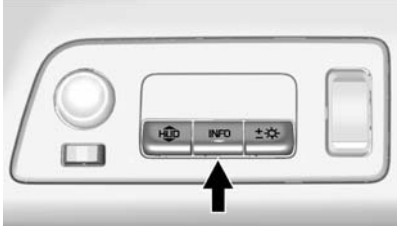

The HUD control is to the left of the steering wheel on the instrument panel.

To adjust the HUD image so that items are properly displayed:

1. Adjust the driver seat.
2. Start the engine.
3. Adjust the HUD settings as needed.

HUD **(Image Adjustment):** Press down or lift up to adjust the vertical position of the HUD image in the windshield.

INFO **(Display View):** Press to select the display view. Each press will cause the display view to change to the next view. If vehicle messages are displayed, pressing the DIC select button may clear the message. See *Driver Information Center (DIC) on page 5-26*.

±☼ **(Image Brightness):** Lift up and hold to brighten the display. Press down and hold to dim the display. Hold down to turn the display off.

The HUD image will automatically dim and brighten to compensate for outside lighting. The HUD brightness control can also be adjusted as needed.

The HUD image can temporarily light up depending on the angle and position of the sunlight on the HUD display. This is normal.

Polarized sunglasses could make the HUD image harder to see.

Display Views

There are several HUD views that can be displayed:

English

Metric

Tour: Displays the vehicle speed, gear position, shift indicator, and driver mode.

English

Metric

Sport: Displays the vehicle speed, a circular tachometer, gear position, shift indicator, and G-Force meter.

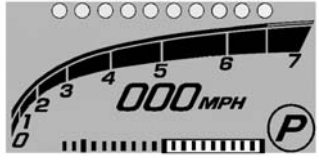

English

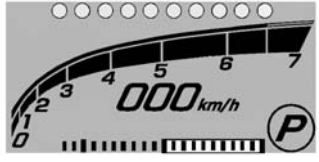

Metric

Track: Displays the vehicle speed, a linear tachometer, gear position, shift lights, and G-Force meter.

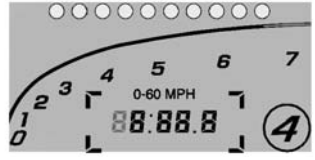

English

Metric

Timing: Displays a linear tachometer, gear position, shift lights, and performance or lap timer. The performance or lap timer content displayed depends on which feature is currently in use in the instrument cluster. See *Instrument Cluster on page 5-7*.

Interrupts

The interrupt information temporarily displays in any HUD view. Once displayed, HUD returns to the previous HUD view. Interrupts may include:

- Audio Information
- Navigation Turn-by-Turn Information
- Incoming Call Information
- Vehicle Alerts

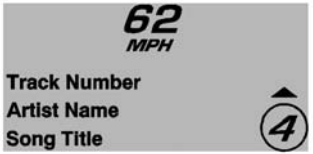

English

Metric

Audio: May display when a new source, radio station, or media type is selected.

English

Metric

Navigation: Turn-by-turn navigation information may be displayed when Navigation is active and an upcoming maneuver is pending. It appears until the maneuver is complete and then the HUD display returns to the previous view.

English

Metric

Phone: May display when an incoming call is received from either OnStar or a Bluetooth connected phone. It appears momentarily until the call is answered or ignored.

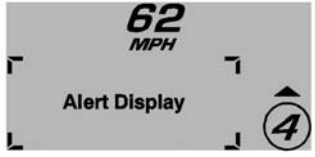

English

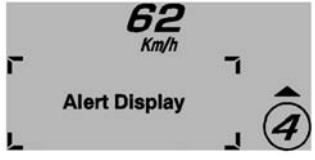

Metric

Vehicle Alerts: Alerts can be dismissed in the instrument cluster. All alerts are not displayed in the HUD.

Care of the HUD

Clean the inside of the windshield to remove any dirt or film that could reduce the sharpness or clarity of the HUD image.

Clean the HUD lens with a soft cloth sprayed with glass cleaner. Wipe the lens gently, then dry it.

HUD Troubleshooting

Check that:

- Nothing is covering the HUD lens.
- HUD brightness setting is not too dim or too bright.
- HUD is adjusted to the proper height.
- Polarized sunglasses are not worn.
- Windshield and HUD lens are clean.

If the HUD image is not correct, contact your dealer.

The windshield is part of the HUD system. See *Windshield Replacement on page 10-37*.

Vehicle Messages

Messages displayed on the DIC indicate the status of the vehicle or some action that may be needed to correct a condition. Multiple messages may display one after the other.

The messages that do not require immediate action can be acknowledged and cleared by pressing SEL. The messages that require immediate action cannot be cleared until that action is performed. All messages should be taken seriously and clearing the messages does not correct the problem.

The following are some of the vehicle messages that may be displayed depending on the vehicle content.

Battery Voltage and Charging Messages

BATTERY SAVER ACTIVE

This message displays when the vehicle has detected that the battery voltage is dropping beyond a reasonable point. The battery saver system starts reducing features of the vehicle that may be noticed. At the point that features are disabled, this message displays. Turn off unnecessary accessories to allow the battery to recharge.

LOW BATTERY

This message is displayed when the battery voltage is low. See *Battery on page 10-33*.

SERVICE BATTERY CHARGING SYSTEM

This message is displayed when there is a fault in the battery charging system. Take the vehicle to your dealer for service.

Brake System Messages

BRAKE FLUID LOW

This message is displayed when the brake fluid level is low. See *Brake Fluid on page 10-32*.

RELEASE PARKING BRAKE

This message is displayed if the Electric Parking Brake is on while the vehicle is in motion. See *Electric Parking Brake on page 9-35*.

SERVICE BRAKE ASSIST

This message may be displayed when there is a problem with the brake boost assist system. When this message is displayed, the brake boost assist motor might be heard operating and you might notice pulsation in the brake pedal. This is normal under these conditions. Take the vehicle to your dealer for service.

SERVICE PARKING BRAKE

This message is displayed when there is a problem with the parking brake. Take the vehicle to your dealer for service.

STEP ON BRAKE TO RELEASE PARK BRAKE

This message is displayed if you attempt to release the Electric Parking Brake without the brake pedal applied. See *Electric Parking Brake on page 9-35*.

Compass Messages

Dashes may be displayed if the vehicle temporarily loses communication with the Global Positioning System (GPS).

Convertible Top Messages

The following messages are for vehicles with a power convertible top.

ATTACH TRUNK PARTITION TO OPERATE TOP

This message displays and a sound will be heard if the trunk partition is not in place. Open the hatch/trunk and make sure the trunk partition is secure and no objects are on the trunk partition.

BATTERY VOLTAGE TOO LOW – TOP DISABLED

This message displays when the battery voltage is too low to operate the convertible top.

CLOSE TRUNK TO MOVE TOP

This message displays if the trunk is open while you are trying to operate the convertible top. Make sure the trunk is closed before operating the convertible top.

FOLDING TOP MOTION COMPLETE

This message displays when the top successfully completes an open/close cycle.

FOLDING TOP NOT SECURE COMPLETE TOP MOTION

This message occurs if the top is not secure. Several beeps will sound. Complete the power open or power close cycle for the top. If it is not possible to move the top to a fully open or fully closed position, make sure that all objects are clear of the path of the top system components.

ONLY MANUAL OPERATION OF TOP POSSIBLE

This message indicates that the position of the top cannot be fully determined by the power convertible top controls. Try moving the top in the other direction. This message will also be displayed if a fault is detected by the convertible top controls. See “Manual Movement of Top” under *Convertible Top on page 2-27*.

REDUCE VEHICLE SPEED TO OPERATE TOP

This message is displayed when the vehicle speed exceeds or is approaching the convertible top speed cut off.

TEMPERATURE TOO LOW – TOP DISABLED

This message displays and a sound will be heard when the power convertible top button is pressed and it is too cold to operate the power convertible top. Move the vehicle to a warmer location and wait for the vehicle temperature to rise. This may take several hours depending on the initial vehicle temperature and the temperature of the new location.

TOP NOT SECURE

This message displays when the power convertible top is not completely opened or closed. Press and hold the convertible top button until the top is fully opened or closed. This is indicated by the FOLDING TOP MOTION COMPLETE message being displayed and an audible indicator.

TOP POWERING DOWN COMPLETE TOP MOTION

This message displays when the power convertible top can no longer hold the top in an intermediate position. Top system components may move during this time based on external forces. Keep objects clear from the normal path of movement for the top system components.

TOP SYSTEM OVERHEATED, PLEASE WAIT

This message displays and a sound will be heard when the power convertible top button is pressed and the power convertible top pump motor temperature is overheated. Wait for the power convertible top pump motor to cool down before using the power convertible top.

VALET SWITCH ACTIVE – TOP DISABLED

This message displays when Valet Mode is active.

Cruise Control Messages

CRUISE SET TO XXX

This message displays when the cruise control is set and shows the speed it was set to. See *Cruise Control on page 9-48*.

Door Ajar Messages

DOOR OPEN

A door open symbol will display on the DIC showing which door is open. If the vehicle has been shifted out of P (Park), a DOOR OPEN message will also be displayed. If the shift lever is in M (Manual Mode), the DOOR OPEN message will display if the vehicle starts to move. Close the door completely.

HOOD OPEN

This message will display along with a hood open symbol when the hood is open. Close the hood completely.

TRUNK OPEN

This message will display along with a symbol when the trunk is open. Close the trunk completely.

Engine Cooling System Messages

A/C OFF DUE TO HIGH ENGINE TEMP

This message displays when the engine coolant becomes hotter than the normal operating temperature. To avoid added strain on a hot engine, the air conditioning compressor automatically turns off. When the coolant temperature returns to normal, the air conditioning compressor turns back on. The vehicle can continue to be driven.

If this message continues to appear, have the system repaired by your dealer as soon as possible to avoid damage to the engine.

ENGINE OVERHEATING — IDLE ENGINE

This message displays when the engine coolant temperature is too hot. Stop and allow the vehicle to idle until it cools down.

ENGINE OVERHEATED — TURN VEHICLE OFF

This message displays and a continuous chime sounds if the engine cooling system reaches unsafe temperatures for operation. Stop and turn off the vehicle as soon as it is safe to do so to avoid severe damage. This message clears when the engine has cooled to a safe operating temperature.

Engine Oil Messages

CHANGE ENGINE OIL SOON

This message displays when the engine oil needs to be changed. When you change the engine oil, be sure to reset the Oil Life System. See *Engine Oil Life System on page 10-18*, *Driver Information Center (DIC) on page 5-26*, *Engine Oil on page 10-12*, and *Maintenance Schedule on page 11-2*.

ENGINE OIL HOT, IDLE ENGINE

This message displays when the engine oil temperature is too hot. Stop and allow the vehicle to idle until it cools down.

ENGINE OIL LOW — ADD OIL

On some vehicles, this message displays when the engine oil level may be too low. Check the oil level before filling to the recommended level. If the oil is not low and this

message remains on, take the vehicle to your dealer for service. See *Engine Oil on page 10-12*.

OIL PRESSURE LOW — STOP ENGINE

This message displays if low oil pressure levels occur. Stop the vehicle as soon as safely possible and do not operate it until the cause of the low oil pressure has been corrected. Check the oil as soon as possible and have the vehicle serviced by your dealer.

UPSHIFT NOW, ENGINE PROTECTION ACTIVE

This message indicates the engine controls have taken action to prevent an oil starvation condition. This may reduce the available engine power, or on automatic transmission equipped vehicles force an upshift to a higher gear.

Engine Power Messages

ENGINE POWER IS REDUCED

This message displays when the vehicle's engine power is reduced. Reduced engine power can affect the vehicle's ability to accelerate. If this message is on, but there is no reduction in performance, proceed to your destination. The performance may be reduced the next time the vehicle is driven. The vehicle may be driven at a reduced speed while this message is on, but maximum acceleration and speed may be reduced. Anytime this message stays on, the vehicle should be taken to your dealer for service as soon as possible.

Fuel System Messages

FUEL LEVEL LOW

This message displays when the vehicle is low on fuel. Refuel as soon as possible.

Key and Lock Messages

NO REMOTE DETECTED

This message displays when the transmitter battery may be weak. See “Starting the Vehicle with a Low Transmitter Battery” under *Remote Keyless Entry (RKE) System Operation on page 2-3*.

NO REMOTE KEY WAS DETECTED PLACE KEY IN TRANSMITTER POCKET THEN START YOUR VEHICLE

This message displays when trying to start the vehicle if an RKE transmitter is not detected. The transmitter battery may be weak. See “Starting the Vehicle with a Low Transmitter Battery” under *Remote Keyless Entry (RKE) System Operation on page 2-3*.

NO REMOTE PRESS BRAKE TO RESTART

This message displays if the RKE transmitter is no longer detected in the vehicle. Press the brake pedal to restart the vehicle.

NUMBER OF KEYS PROGRAMMED

This message displays when programming new keys to the vehicle.

REMOTE LEFT IN VEHICLE

This message displays when leaving the vehicle with the RKE transmitter still inside.

REPLACE BATTERY IN REMOTE KEY

This message displays when the battery in the RKE transmitter needs to be replaced.

Lamp Messages

AUTOMATIC LIGHT CONTROL ON/OFF

This message is displayed when the automatic light control has been turned on or off. See *Automatic Headlamp System on page 6-3*.

TURN SIGNAL ON

This message is displayed if the turn signal has been left on. Turn off the turn signal.

Ride Control System Messages

COMPETITIVE DRIVING MODE

This message displays and a sound will be heard when the Competitive Driving mode is selected. The instrument cluster light will be on when the Competitive Driving mode is selected. Launch Control is available when this mode is selected. The Traction Control System (TCS) will not be operating while in the Competitive Driving mode. Adjust your driving accordingly. See *Competitive Driving Mode on page 9-43*, including the “Launch Control” information.

MAXIMUM SPEED 129 km/h (80 MPH)

This message displays when a malfunction is present in the Selective Ride Control system. The vehicle speed will be limited to a value determined by the vehicle when the shock absorber system has failed and the shocks are in their full soft mode. Have the vehicle serviced by your dealer as soon as possible.

To acknowledge the message, press the SEL button. The message reappears every 10 minutes until this condition changes.

PERF TRAC 1 – WET ACTIVE HANDLING ON

This message displays and a sound will be heard when this Performance Traction Management mode is selected. The instrument cluster light will also be on when this mode is selected. Launch Control is available when this mode is selected. In this mode the Traction Control and StabiliTrak system are available but intended for use on wet race track conditions. Adjust your driving accordingly. This system is available only on Z06 models and models with FE4 – Z51 Performance Package and Magnetic Ride Control. See "Performance Traction Management" and "Launch Control" under *Competitive Driving Mode on page 9-43* for more information about the use of this mode.

PERF TRAC 2 – DRY ACTIVE HANDLING ON

This message displays and a sound will be heard when this Performance Traction Management mode is selected. The instrument cluster light will also be on when this mode is selected. Launch Control is available when this mode is selected. In this mode the Traction Control and StabiliTrak system are available but intended for use on dry race track conditions. Adjust your driving accordingly. This system is available only on Z06 models and models with FE4. See "Performance Traction Management" and "Launch Control" under *Competitive Driving Mode on page 9-43* for more information about the use of this mode.

PERF TRAC 3 – SPORT ACTIVE HANDLING ON

This message displays and a sound will be heard when this Performance Traction Management mode is selected. The instrument cluster light will also be on when this mode is selected. Launch Control is available when this mode is selected. In this mode the Traction Control and StabiliTrak system are available but intended for use on dry race track conditions. Adjust your driving accordingly. This system is available only on Z06 models and models with FE4. See "Performance Traction Management" and "Launch Control" under *Competitive Driving Mode on page 9-43* for more information about the use of this mode.

PERF TRAC 4 – SPORT ACTIVE HANDLING OFF

This message displays and a sound will be heard when this Performance Traction Management mode is selected. The instrument cluster light will also be on when this mode is selected. Launch Control is available when this mode is selected. In this mode the Traction Control is available but intended for use on dry race track conditions.

The StabiliTrak system is disabled when this mode is selected. This mode will require more driver skill than modes 1–3. Adjust your driving accordingly. This system is available only on Z06 models and models with FE4. See “Performance Traction Management” and “Launch Control” under *Competitive Driving Mode on page 9-43* for more information about the use of this mode.

PERF TRAC 5 – RACE ACTIVE HANDLING OFF

This message displays and a sound will be heard when this Performance Traction Management mode is selected. The instrument cluster light will also be on when this mode is selected. Launch Control is available when this mode is selected. In this mode the Traction Control is available but intended for use on dry race track conditions. The StabiliTrak system is disabled when this mode is selected. This mode will require more driver skill than modes 1–4. Adjust your driving accordingly. This system is available only on Z06 models and models with FE4. See “Performance Traction Management” and “Launch Control” under *Competitive Driving Mode on page 9-43* for more information about the use of this mode.

REAR AXLE OFF

If this message is displayed, the Electronic Limited-Slip Rear (if equipped) is not operational. Drive with caution. Avoid high speeds, aggressive driving, and sharp cornering. The system could be overheated. Allow the system to cool. If this message remains on, see your dealer for service. The vehicle is safe to drive, however, continue to drive with caution.

When this message is displayed, the vehicle’s handling capabilities will be reduced during severe maneuvers. StabiliTrak will be affected. See *Traction Control/ Electronic Stability Control on page 9-37*.

SERVICE STABILITRAK

This message displays if there is a problem with the StabiliTrak system and the vehicle needs service. The StabiliTrak system light on the instrument cluster also turns on and a sound will be heard. See your dealer. When this message is displayed, the system is not working. Adjust your driving accordingly. See *Traction Control/ Electronic Stability Control on page 9-37*.

SERVICE TRACTION SYSTEM

If this message displays when you are driving, there is a problem with the Traction Control System (TCS) and the vehicle needs service. See your dealer. When this message is displayed, the system will not limit wheel spin. Adjust your driving accordingly.

The TCS light on the instrument cluster will also turn on and a sound will be heard.

When this message is displayed, the computer controlled systems will not assist the driver in controlling the vehicle. Have the system repaired by your dealer as soon as possible. Adjust your driving accordingly. See *Traction Control/ Electronic Stability Control on page 9-37*.

To acknowledge the message, press the SEL button.

SHOCKS INOPERATIVE

This message displays when a malfunction is present in the Selective Ride Control system, which is causing the shocks to be in their full soft mode. This is a warning to the driver that the vehicle handling may be affected. Have the vehicle serviced by your dealer as soon as possible.

To acknowledge the message, press the SEL button. The message reappears every 10 minutes until this condition changes.

Airbag System Messages

SERVICE AIRBAG

This message displays if there is a problem with the airbag system. Take the vehicle to your dealer for service.

Security Messages

THEFT ATTEMPTED

This message displays if the vehicle detects a tamper condition.

Service Vehicle Messages

PROGRAM CLUSTER

This message is displayed if there is a problem with the instrument cluster. Take the vehicle to your dealer for service.

SERVICE POWER STEERING

This message is displayed if there is a problem with the power steering system and a chime may sound. Take the vehicle to your dealer for service.

SERVICE REAR AXLE

If there is a problem detected with the Electronic Limited-Slip Rear Axle, this message displays. When displayed, the system is not operational and driving should be adjusted accordingly. Take the vehicle to your dealer for service as soon as possible.

When this message is displayed, the vehicle's handling capabilities will be reduced during severe maneuvers. StabiliTrak will be affected. See *Traction Control/ Electronic Stability Control on page 9-37*.

SERVICE VEHICLE SOON

This message is displayed if there is a problem with the vehicle. Take the vehicle to your dealer for service.

Starting the Vehicle Messages

PRESS BRAKE TO START VEHICLE

This message is displayed when attempting to start an automatic transmission equipped vehicle without first pressing the brake pedal.

PRESS CLUTCH TO START

This message is displayed when attempting to start a manual transmission equipped vehicle without first pressing the clutch pedal.

SERVICE KEYLESS START SYSTEM

This message is displayed if there is a problem with the pushbutton start system. Take the vehicle to your dealer for service.

Tire Messages

SERVICE TIRE MONITOR SYSTEM

This message displays if there is a problem with the Tire Pressure Monitor System (TPMS). See *Tire Pressure Monitor Operation on page 10-58*.

TIRE LEARNING ACTIVE

This message displays when the system is learning new tires. See *Tire Pressure Monitor Operation on page 10-58*.

TIRE LOW ADD AIR TO TIRE

This message displays when the pressure in one or more of the tires is low.

This message also displays LEFT FRONT, RIGHT FRONT, LEFT REAR, or RIGHT REAR to indicate the location of the low tire.

The low tire pressure warning light will also come on. See *Tire Pressure Light on page 5-24*.

If a tire pressure message appears on the DIC, stop as soon as you can. Inflate the tires by adding air until the tire pressure is equal to the values shown on the Tire and Loading Information label. See *Tires on page 10-46*, *Vehicle Load Limits on page 9-14*, and *Tire Pressure on page 10-55*.

You can receive more than one tire pressure message at a time. The DIC also shows the tire pressure values. See *Driver Information Center (DIC) on page 5-26*.

Transmission Messages

1-4 SHIFT

This message displays on a manual transmission vehicle when you can only shift from 1 (First) to 4 (Fourth) instead of 1 (First) to 2 (Second).

PERFORMANCE SHIFT ACTIVE

This message appears when the vehicle is in Sport or Track mode and either Performance Algorithm Shift/Performance Algorithm Liftfoot transmission modes have been entered.

SERVICE TRANSMISSION

This message displays if there is a problem with the transmission. See your dealer.

SHIFT DENIED

This message displays when attempting to shift to a gear not appropriate for the vehicle speed and engine revolutions per minute (rpm).

SHIFT TO PARK

This message displays when the transmission needs to be shifted to P (Park). This may appear when attempting to remove the key from the vehicle if the vehicle is not in P (Park).

TRANSMISSION HOT — IDLE ENGINE

This message displays and a chime sounds if the transmission fluid in the vehicle gets hot. Driving with the transmission fluid temperature high can cause damage to the vehicle. Stop the vehicle and let it idle to allow the transmission to cool. This message clears when the fluid temperature reaches a safe level.

If this message is displayed during normal vehicle operation on flat roads, the vehicle may need service. See your dealer for an inspection.

Vehicle Reminder Messages

ICE POSSIBLE DRIVE WITH CARE

This message is displayed when ice conditions are possible.

TURN WIPER CONTROL TO INTERMITTENT FIRST

This message is displayed when attempting to adjust the intermittent wiper speed without intermittent selected on the wiper control. See *Windshield Wiper/Washer on page 5-2*.

Vehicle Speed Messages

SPEED LIMIT EXCEEDED

This message is displayed when the vehicle speed is greater than the speed warning speed. See "Speed Warning" under *Instrument Cluster on page 5-7*.

SPEED LIMIT SET TO XXX

This message is displayed when the speed warning is set. See "Speed Warning" under *Instrument Cluster on page 5-7*.

Washer Fluid Messages

WASHER FLUID LOW ADD FLUID

This message may display when the washer fluid level is low. Fill the windshield washer reservoir as soon as possible. See *Engine Compartment Overview on page 10-7* for the location of the windshield washer reservoir. Also, see *Washer Fluid on page 10-28*.

Window Messages

OPEN, THEN CLOSE DRIVER/ PASSENGER WINDOW

This message is displayed when the window needs to be reprogrammed. If the vehicle's battery has been recharged or disconnected, you will need to program each front window for the express-up feature to work. See *Power Windows on page 2-22*.

Vehicle Personalization

Use the audio system controls to access the personalization menus for customizing vehicle features.

The following are all possible personalization features. Depending on the vehicle, some may not be available.

Infotainment System Audio System Controls

To access the personalization menu:

1. Press SETTINGS on the Home Page on the infotainment system display.
2. Press the desired feature to display a list of available options.
3. Press to select the desired feature setting.
4. Press ◁ BACK on the faceplate or press the Back screen button to return to the previous menu.

Personalization Menus

The following list of menu items may be available:

- Time and Date
- Driving Mode
- Language (Language)
- Valet Mode
- Teen Driver
- Radio
- Vehicle
- Bluetooth
- Voice
- Display
- Rear Camera
- Return to Factory Settings
- Software Information

Each menu is detailed in the following information.

Time and Date

Manually set the time and date. See *Clock on page 5-4*.

Driving Mode

Select and the following may display:

- Engine Sound Management
- Steering

Engine Sound Management

This allows the Engine Sound Management feature to be turned on or off.

Select Auto (Mode Selector) or Off.

Steering

This allows the Steering feature to be turned on or off.

Select Auto (Mode Selector), Tour, Sport, or Track.

Language (Language)

Select Language, then select from the available language(s).

The selected language will display on the system, and voice recognition will reflect the selected language.

Valet Mode (If Equipped)

This will lock the infotainment system and steering wheel controls. It may also limit top speed, power, and access to vehicle storage locations (if equipped).

To enable valet mode:

1. Enter a four-digit code on the keypad.
2. Press Enter to go to the confirmation screen.
3. Re-enter the four-digit code.

Press LOCK or UNLOCK to lock or unlock the system. Press Back to go back to the previous menu.

Teen Driver (If Equipped)

Press and the following may display:

- View Report Card
- Manage Settings
- Change PIN
- Key Registration
- Clear All Teen Keys/PIN

View Report Card

This allows the driver's driving habits to be viewed. See "Teen Driver" in "Settings" in the infotainment manual.

Manage Settings

Press and the following may display:

- Audio Volume Limit
- Teen Driver Speed Limiter
- Teen Driver Speed Warning

Audio Volume Limit

This allows a maximum radio volume to be set.

Select Off or On.

Teen Driver Speed Limiter

If equipped, this allows the maximum speed limit of the vehicle to be set.

Select Off or On.

Teen Driver Speed Warning

This allows a warning to be set when a certain speed is exceeded.

Select Off or On.

Change PIN

This allows the Personal Identification Number (PIN) to be changed. See "Teen Driver" in "Settings" in the infotainment manual.

Key Registration

This allows the key to be registered. See "Register or Unregister a Key" in "Teen Driver" in the infotainment manual.

Clear All Teen Keys/PIN

This allows all Teen Driver keys and PIN to be cleared.

Select Continue or Cancel.

Radio

Press and the following may display:

- Manage Favorites
- Number of Favorites Shown
- Audible Touch Feedback
- Bose Audio Pilot
- Maximum Start Up Volume

Manage Favorites

This allows favorites to be edited. See "Manage Favorites" in "Settings" under "Radio" in the infotainment manual.

Number of Favorites Shown

Press to set the number of favorites to display.

Select the desired number or select Auto and the infotainment system will automatically adjust the number of favorites shown.

Audible Touch Feedback

This allows Audible Touch Feedback to be turned on or off.

Select Off or On.

Bose Audio Pilot

This feature adjusts the volume based on the noise in the vehicle. See “Bose AudioPilot Noise Compensation Technology” under “Infotainment System Settings” in the infotainment manual.

Select Off or On.

Maximum Start Up Volume

This feature sets the maximum startup volume. If the vehicle is started and the volume is greater than this level, the volume is adjusted to this level.

To set the maximum startup volume, press + or − to increase or decrease.

Vehicle

Select and the following may display:

- Climate and Air Quality
- Comfort and Convenience
- Lighting
- Power Door Locks
- Remote Lock, Unlock, Start

Climate and Air Quality

Select and the following may display:

- Auto Fan Max Speed
- Auto Defog
- Auto Rear Defog

Auto Fan Max Speed

This feature will set the maximum auto fan speed.

Select Low, Medium, or High.

Auto Defog

When set to On, the front defog will automatically react to temperature and humidity conditions that may cause fogging.

Select Off or On.

Auto Rear Defog

If equipped, this feature will automatically turn on the rear defog.

Select Off or On.

Comfort and Convenience

Select and the following may display:

- Auto Memory Recall
- Easy Exit Options
- Chime Volume
- Reverse Tilt Mirror

Auto Memory Recall

This feature automatically recalls the current driver’s previously stored 1 or 2 button positions when entering the vehicle. See *Memory Seats on page 3-4*.

Select Off or On. On some vehicles select Off, On - Driver Door Open, or On - At Ignition On.

Easy Exit Options

This feature automatically recalls the current driver’s previously stored Exit button position when exiting the vehicle. See *Memory Seats on page 3-4*.

Select Off or On.

Chime Volume

This allows the selection of the chime volume level.

Press + or − to adjust the volume.

Reverse Tilt Mirror

This allows the feature to be turned on or off.

Select Off, On - Driver and Passenger, On - Driver, or On - Passenger.

Lighting

Select and the following may display:

- Vehicle Locator Lights
- Exit Lighting

Vehicle Locator Lights

This feature will flash the exterior lamps when 🔓 on the Remote Keyless Entry (RKE) transmitter is pressed to locate the vehicle.

Select Off or On.

Exit Lighting

This allows the selection of how long the exterior lamps stay on when leaving the vehicle when it is dark outside.

Select Off, 30 Seconds, 60 Seconds, or 120 Seconds.

Power Door Locks

Select and the following may display:

- Unlocked Door Anti-Lockout
- Auto Door Unlock
- Delayed Door Lock

Unlocked Door Anti-Lockout

When on, this feature will keep the driver door from locking when the door is open. If Off is selected, the Delayed Door Lock menu will be available.

Select Off or On.

Auto Door Unlock

This allows selection of which of the doors will automatically unlock when the vehicle is shifted into P (Park) with an automatic transmission or when the vehicle is turned off with a manual transmission.

Select Off, All Doors, or Driver Door.

Delayed Door Lock

When on, this feature will delay the locking of the doors. To override the delay, press the power door lock switch on the door.

Select Off or On.

Remote Lock, Unlock, Start

Select and the following may display:

- Remote Unlock Light Feedback
- Remote Lock Feedback
- Remote Door Unlock
- Remote Start Auto Cool Seats
- Remote Start Auto Heat Seats
- Passive Door Unlock

- Passive Door Lock
- Remote Left in Vehicle Alert

Remote Unlock Light Feedback

When on, the exterior lamps will flash when unlocking the vehicle with the RKE transmitter.

Select Off or Flash Lights.

Remote Lock Feedback

This allows selection of what type of feedback is given when locking the vehicle with the RKE transmitter.

Select Off, Lights and Horn, Lights Only, or Horn Only.

Remote Door Unlock

This allows selection of which doors will unlock when pressing 🔓 on the RKE transmitter.

Select All Doors or Driver Door.

Remote Start Auto Cool Seats

If equipped and turned on, this feature will turn the ventilated seats on when using remote start on warm days.

Select Off or On.

Remote Start Auto Heat Seats

If equipped and turned on, this feature will turn the heated seats on when using remote start on cold days.

Select Off or On.

Passive Door Unlock

This allows the selection of what doors will unlock when using the button on the driver door to unlock the vehicle.

Select All Doors or Driver Door.

Passive Door Lock

This feature can be turned on or off, or can be used to select feedback when using the button on the driver door to lock the vehicle. See *Remote Keyless Entry (RKE) System Operation on page 2-3*.

Select Off, On with Horn Chirp, or On.

Remote Left in Vehicle Alert

This feature sounds an alert when the RKE transmitter is left in the vehicle.

Select Off or On.

Bluetooth

Select and the following may display:

- Pair New Device
- Device Management
- Ringtones
- Voice Mail Numbers

Pair New Device

Select to pair a new device. See “Pairing” in “Infotainment Controls” under “Bluetooth” in the infotainment manual.

Device Management

Select to connect to a different phone source, disconnect a phone, or delete a phone.

Ringtones

Press to change the ring tone for the specific phone. The phone does not need to be connected to change the ring.

Voice Mail Numbers

This feature displays the voice mail number for all connected phones. To change the voice mail number, select EDIT or press the EDIT button. Type a new number, then select SAVE or press the SAVE button.

Voice

Select and the following may display:

- Confidence Threshold
- Prompt Length
- Audio Feedback Speed

Confidence Threshold

This feature allows the adjustment of the sensitivity of the speech recognition system.

Select Confirm More or Confirm Less.

Prompt Length

This feature adjusts the voice prompt length.

Select Short or Long.

Audio Feedback Speed

This feature adjusts the audio feedback speed.

Select Slow, Medium, or Fast.

Display

Select and the following may display:

- Mode
- Calibrate Touchscreen
- Turn Display Off

Mode

Select to change the display screen for day or night driving.

Select Auto, Day, or Night.

Calibrate Touchscreen

Select to calibrate the touchscreen, then follow the prompts.

Turn Display Off

Select to turn the display off. Press anywhere on the display area or any faceplate button to turn the display on.

Rear Camera

Select and the following may display:

- Guidance Lines

Guidance Lines

Select to turn Off or On. See “Guidance Lines” in *Rear Vision Camera (RVC) on page 9-51*.

Return to Factory Settings

Select and the following may display:

- Restore Vehicle Settings
- Clear All Private Data
- Restore Radio Settings

Restore Vehicle Settings

This allows selection of restoring vehicle settings.

Select Restore or Cancel.

Clear All Private Data

This allows selection to clear all private information from the vehicle.

Select Delete or Cancel.

Restore Radio Settings

This allows selection to restore radio settings.

Select Restore or Cancel.

Software Information

Select to view the infotainment system current software information.

Universal Remote System

See *Radio Frequency Statement on page 13-12*.

The FCC Grant of Equipment Authorization Certificate number is NZLSAHL5B.

The Canadian Registration ID number is 4112A-SAHL5B.

Universal Remote System Programming

If equipped, these buttons are in the driver sun visor.

This system can replace up to three remote control transmitters used to activate devices such as garage door openers, security systems, and home automation devices. These instructions refer to a garage door opener, but can be used for other devices.

Do not use the Universal Remote system with any garage door opener that does not have the stop and reverse feature. This includes any garage door opener model manufactured before April 1, 1982.

Read these instructions completely before programming the Universal Remote system. It may help to have another person assist with the programming process.

Keep the original hand-held transmitter for use in other vehicles as well as for future programming. Erase the programming when vehicle ownership is terminated.

See “Erasing Universal Remote System Buttons” later in this section.

To program a garage door opener, park outside directly in line with and facing the garage door opener receiver. Clear all people and objects near the garage door.

Make sure the hand-held transmitter has a new battery for quick and accurate transmission of the radio-frequency signal.

Programming the Universal Remote System

For questions or help programming the Universal Remote system, call 1-800-355-3515 or see www.homelink.com.

Programming involves time-sensitive actions, and may time out causing the procedure to be repeated.

To program up to three devices:

1. Hold the end of the hand-held transmitter about 3 to 8 cm (1 to 3 in) away from the Universal Remote system buttons with the indicator light in view. The hand-held transmitter was supplied by the manufacturer of the garage door opener receiver.
2. At the same time, press and hold both the hand-held transmitter button and one of the three Universal Remote system buttons to be used to operate the garage door. Do not release either button until the indicator light changes from a slow to a rapid flash. Then release both buttons.

   Some garage door openers may require substitution of Step 2 with the procedure under in “Radio Signals for Canada and Some Gate Operators” later in this section.
3. Press and hold the newly programmed Universal Remote system button for five seconds while watching the indicator light and garage door activation.
   - If the indicator light stays on continuously or the garage door moves when the button is pressed, then programming is complete. There is no need to complete Steps 4–6.
   - If the indicator light does not come on or the garage door does not move, a second button press may be required. For a second time, press and hold the newly programmed button for five seconds. If the light stays on or the garage door moves, programming is complete.
   - If the indicator light blinks rapidly for two seconds, then changes to a solid light

and the garage door does not move, continue with programming Steps 4–6.

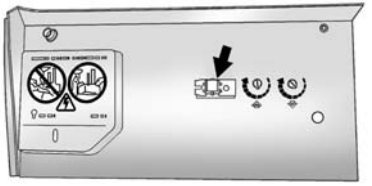

Learn or Smart Button

4. After completing Steps 1–3, locate the Learn or Smart button inside the garage on the garage door opener receiver. The name and color of the button may vary by manufacturer.
5. Press and release the Learn or Smart button. Step 6 must be completed within 30 seconds of pressing this button.
6. Inside the vehicle, press and hold the newly programmed Universal Remote system button for two seconds and then release it. If the garage door does not move or the lamp on the garage door opener receiver does not flash, press and hold the same button a second time for two seconds, then release it. Again, if the door does not move or the garage door lamp does not flash, press and hold the same button a third time for two seconds, then release it.

The Universal Remote system should now activate the garage door.

Repeat the process to program the two remaining buttons.

Radio Signals for Canada and Some Gate Operators

For questions or programming help call 1-800-355-3515 or see www.homelink.com.

Canadian radio-frequency laws and some U.S. gate operators require transmitter signals to time out or quit after several seconds of transmission. This may not be long enough for the Universal Remote system to pick up the signal during programming.

If the programming did not work, replace Step 2 under “Programming the Universal Remote System” with the following:

Press and hold the Universal Remote system button while pressing and releasing the hand-held transmitter button every two seconds until the signal has been successfully accepted by the Universal Remote system. The Universal Remote system indicator light will flash slowly at first and then rapidly. Proceed with Step 3 under “Programming the Universal Remote System” to complete.

Universal Remote System Operation

Using the Universal Remote System

Press and hold the appropriate Universal Remote system button for at least one-half second. The indicator light will come on while the signal is being transmitted.

Erasing Universal Remote System Buttons

Erase all programmed buttons when vehicle ownership is terminated.

To erase:

1. Press and hold the two outside buttons until the indicator light begins to flash. This should take about 10 seconds.
2. Release both buttons.

Reprogramming a Single Universal Remote System Button

To reprogram any of the system buttons:

1. Press and hold any one of the buttons. Do not release the button.
2. The indicator light will begin to flash after 20 seconds. Without releasing the button, proceed with Step 1 under “Programming the Universal Remote System.”

✍ NOTES

Lighting

Exterior Lighting
Exterior Lamp Controls 6-1
Exterior Lamps Off Reminder 6-2
Headlamp High/Low-Beam Changer 6-2
Flash-to-Pass 6-2
Daytime Running Lamps (DRL) 6-2
Automatic Headlamp System 6-3
Hazard Warning Flashers 6-4
Turn and Lane-Change Signals 6-5

Interior Lighting
Instrument Panel Illumination Control 6-5
Courtesy Lamps 6-5
Reading Lamps 6-6

Lighting Features
Entry Lighting 6-6
Exit Lighting 6-6
Battery Power Protection 6-6
Exterior Lighting Battery Saver 6-7

Exterior Lighting

Exterior Lamp Controls

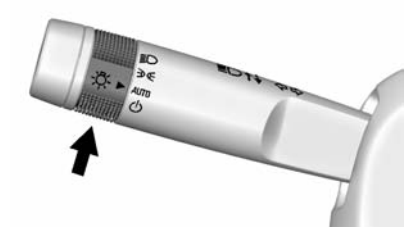

There are four positions:

⏻ **(Off/On):** Briefly turn to this position to turn the automatic light control off or on again. When released, the control returns to the AUTO position.

AUTO (Automatic): Sets the exterior lamps to automatic mode. AUTO mode turns the exterior lamps on and off depending on how much light is available outside the vehicle.

To override AUTO mode, turn the control to ⏻.

To reset to AUTO mode, turn the control to ⏻ and then release back to AUTO. Automatic mode also resets when the vehicle is turned off and then back on again if the control is left in the AUTO position.

(Parking Lamps): Turns on the parking lamps including all lamps, except the headlamps.

The parking lamp indicator light comes on and stays on when the parking lamps are on with the engine off and the ignition to ACC/ACCESSORY.

(Headlamps): Turns on the headlamps together with the parking lamps and instrument panel lights.

Exterior Lamps Off Reminder

A warning chime will sound if the exterior lamp control is left on in either the headlamp or parking lamp position and the driver door is opened with the ignition off.

Headlamp High/ Low-Beam Changer

Push the turn signal lever away from you and release to turn the high beams on. To return to low beams, push the lever again or pull it toward you and release.

This indicator light turns on in the instrument cluster when the high-beam headlamps are on.

Flash-to-Pass

To use the flash-to-pass feature, briefly pull the turn signal lever toward you. The high-beam indicator flashes to indicate to the other driver that you intend to pass.

Daytime Running Lamps (DRL)

DRL can make it easier for others to see the front of your vehicle during the day. DRL are required on all vehicles first sold in Canada.

The DRL system makes the dedicated lamps come on when the following conditions are met:

- It is still daylight and the ignition is on.
- The exterior lamp control is in the AUTO position.
- The transmission is not in P (Park) or the parking brake is off.

When DRL are on, only the front lamps will be on. The parking lamps, taillamps, instrument panel lights, or other exterior lamps will not be on when the DRL are being used.

When it is dark enough outside, the front lamps dim to parking lamps and the normal low-beam headlamps turn on.

When it is bright enough outside, the regular lamps go off, and the front DRL will take over. If the vehicle is started in a dark garage, the automatic headlamp system comes on immediately. Once the vehicle leaves the garage, it takes approximately one minute for the automatic headlamp system to change to DRL if it is light outside. During that delay, the instrument cluster may not be as bright as usual. Make sure the instrument panel brightness knob is in the full bright position. See *Instrument Panel Illumination Control on page 6-5*.

If it is dark enough outside and the exterior lamp control is off, a Driver Information Center (DIC) message may display. See *Lamp Messages on page 5-39*.

Turning the exterior lamp control to off a second time, or turning on the headlamps will remove the DIC message. If the parking lamps were turned on instead, the DIC message will continue to be displayed.

The regular headlamp system should be turned on when needed.

To turn off the DRL, turn the exterior lamp control to the off position or shift into P (Park). The DRL will stay off until the control is toggled again or the vehicle is shifted out of P (Park).

This procedure applies only to vehicles first sold in the United States.

Automatic Headlamp System

When the exterior lamp control is set to AUTO and it is dark enough outside, the headlamps and parking lamps come on automatically.

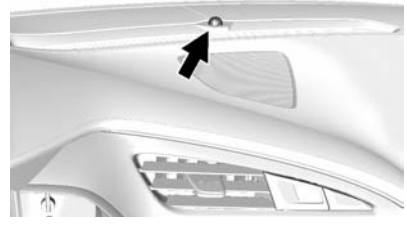

There is a light sensor on top of the instrument panel. Do not cover the sensor, otherwise the headlamps will come on when they are not needed.

The system may also turn on the headlamps and parking lamps when driving through a parking garage or tunnel.

If the vehicle is started in a dark garage, the automatic headlamp system comes on immediately. If it is light outside when the vehicle leaves the garage, there is a slight delay before the automatic headlamp system changes to the DRL. During that delay, the instrument cluster may not be as bright as usual. Make sure the instrument panel brightness control is in the full bright position. See *Instrument Panel Illumination Control on page 6-5*.

When it is bright enough outside, the headlamps and parking lamps will turn off or may change to Daytime Running Lamps (DRL).

The automatic headlamp system turns off when the exterior lamp control is turned to ⏻ or the ignition is off.

To turn automatic headlamp system back on, turn the band to ⏻ again, then release it.

If the automatic headlamp system has the headlamps turned on and you turn the ignition off, the headlamps will turn off. When the driver door is opened the headlamps and parking lamps will illuminate for a period of time.

The length of the delayed illumination period can be changed. See “Exit Lighting” under *Vehicle Personalization on page 5-45*.

The regular headlamp system should be turned on when needed.

Lights On with Wipers

If the windshield wipers are activated in daylight with the engine on and the exterior lamp control is in AUTO, the headlamps, parking lamps, and other exterior lamps will come on. The time it takes for the lamps to turn on depends on the wiper speed. When the wipers are turned off, the lamps turn off. To disable, move the exterior lamp control to ⏻ or ≋00≋.

Hazard Warning Flashers

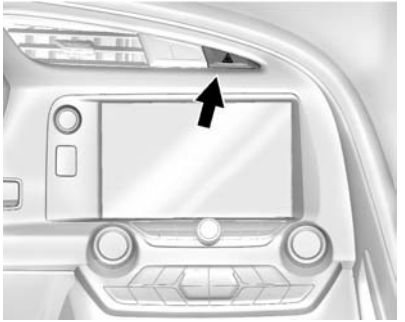

The hazard warning flashers warn others that you have a problem. The button is near the center of the instrument panel.

⚠ **(Hazard Warning Flashers):** Press to make the front and rear turn signal lamps flash on and off. Press again to turn the flashers off.

The hazard warning flashers work no matter what mode the ignition is in, even if the ignition is turned off.

When the hazard warning flashers are on, the turn signals will not work.

Turn and Lane-Change Signals

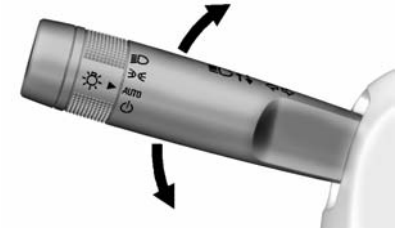

An arrow on the instrument cluster flashes in the direction of the turn or lane change.

Move the lever all the way up or down to signal a turn.

Raise or lower the lever until the arrow starts to flash to signal a lane change. Hold it there until the lane change is complete. If the lever is briefly pressed and released, the turn signal flashes three times. If more flashes are desired, continue to hold the lever.

The lever returns to its starting position when it is released.

If after signaling a turn or lane change the arrows flash rapidly or do not come on, a turn signal indicator light failure may have occurred.

If a turn signal has failed, the lamp may need to be replaced. See your dealer.

Turn Signal on Chime

A chime sounds if the turn signal has been on for more than 1.2 km (0.75 mi) of driving.

If you need to leave the turn signal on for more than 1.2 km (0.75 mi), turn off the signal and then turn it back on.

Interior Lighting

Instrument Panel Illumination Control

The knob for this feature is on the left side of the instrument panel.

Turn the knob clockwise or counterclockwise to brighten or dim the instrument panel lights at night. Turn the knob completely clockwise to turn on the interior lights.

Courtesy Lamps

When any door or the hatch/trunk is opened, the interior lamps will come on, unless it is bright outside.

The rear compartment lights only come on when the rear compartment is opened.

To adjust the brightness of the courtesy lamps, turn the instrument panel brightness knob clockwise or counterclockwise.

Reading Lamps

The reading lamps are in the overhead console. The lamps go on when a door is opened. When the doors are closed, press the lamp buttons to turn on each lamp.

Lighting Features

Entry Lighting

The headlamps, parking lamps, taillamps, back-up lamps, license plate lamps, outside mirror lamps, dome lamp, and most of the interior lamps turn on briefly at night, or in areas with limited lighting, when 🔓 is pressed on the Remote Keyless Entry (RKE) transmitter. When the driver door is opened, all control lights, Driver Information Center (DIC) lights, and door pocket lights turn on. After about 30 seconds the exterior lamps turn off, and then the dome and remaining interior lamps dim to off. Entry lighting can be disabled manually by changing the ignition out of the OFF position, or by pressing 🔒 on the RKE transmitter.

This feature can be changed. See “Vehicle Locator Lights” under *Vehicle Personalization on page 5-45*.

Exit Lighting

The headlamps, taillamps, back-up lamps, parking lamps, outside mirror lamps, and license plate lamps come on at night, or in areas with limited lighting, when the driver door is opened after the ignition is turned off. The dome lamp comes on after the ignition is changed to the OFF position. The exterior lamps and dome lamp remain on after the door is closed for a set amount of time, then automatically turn off.

The exterior lamps turn off immediately by turning the exterior lamp control off.

This feature can be changed. See *Vehicle Personalization on page 5-45*.

Battery Power Protection

This vehicle has a feature to help prevent the battery from being drained in case any of the following lamps are left on: vanity mirror lamps, cargo lamps, reading lamps,

or glove box lamps. If any of these lamps are left on, they will automatically time-out after about 10 minutes. To reset it, the ignition must be turned on.

Exterior Lighting Battery Saver

If the exterior lamps are left on, they turn off when the ignition is turned off. If the parking lamps are turned on while the ignition is off, the parking lamps remain on until they are manually turned off.

✍ NOTES

Infotainment System

Introduction
Infotainment 7-1

Performance Data Recorder (PDR)
Performance Data Recorder (PDR) 7-1

Introduction

Infotainment

See the infotainment manual for information on the radio, audio players, phone, navigation system, and voice or speech recognition. It also includes information on settings.

Performance Data Recorder (PDR)

If equipped, the PDR icon displays on the Home screen.

The PDR records video, audio, and vehicle data. This data is stored on a removable SD card in the glove box.

The recorded data is not stored anywhere else and is only accessible from the SD card.

To begin, insert a FAT32 formatted SD card, Class 10 preferred, into the glove box SD card reader.

Press the PDR icon to access the PDR menu. The options displayed are:

Start Recording

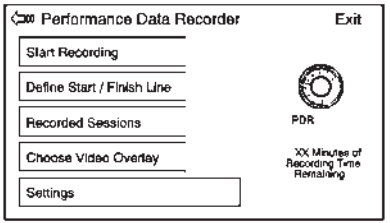

If the system is unable to begin recording, the Start Recording button is grayed out.

Press the Start Recording button to begin recording. After recording begins, this button changes to Stop Recording. Press to stop the recording session.

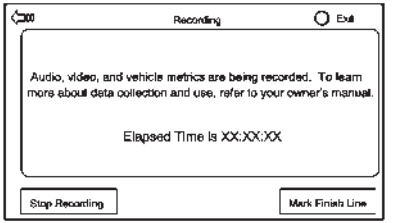

The elapsed time will show when recording. To define a finish line, see “Define Finish Line” later in this section.

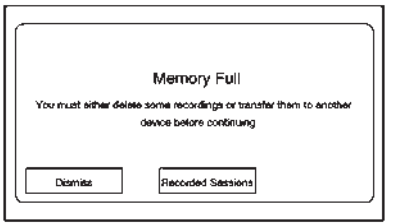

If there is no available space on the SD card, a message displays. Delete or transfer recordings on the SD card or use another SD card with free space.

To delete a recording, go to the Recorded Sessions menu and press X next to the item. See “Recorded Sessions” later in this section.

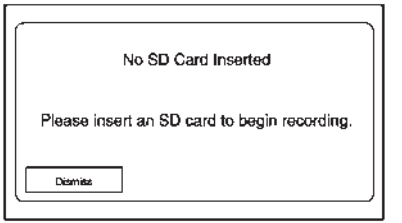

If no SD card is inserted, a message displays.

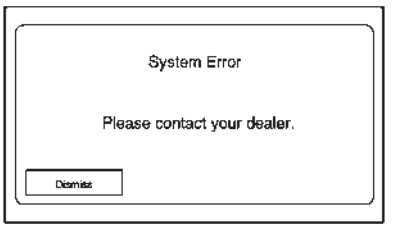

If a system error occurs, a message displays. See your dealer.

Define Finish Line

To track and record the vehicle's lap times, the starting point of a lap must be set. Crossing this point activates the lap timer when recording.

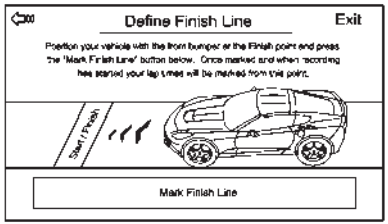

To set the finish line, position the vehicle with the front bumper at the start/finish point. From the PDR menu, press Define Finish Line and then press Mark Finish Line. This can be done with the vehicle moving.

Recorded Sessions

To view recorded videos, press Recorded Sessions.

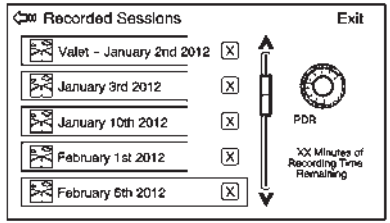

A list of recordings displays.

Select the recording to start playback.

Press X next to an item to delete that recording, Press Yes to delete or No to cancel on the confirmation screen. Press Dismiss to exit.

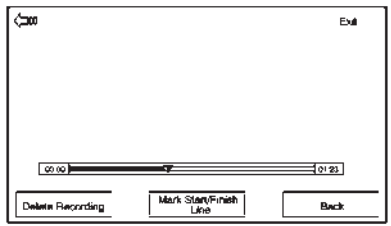

Video playback is not allowed while the vehicle is in motion.

Tap on the screen while the video is playing to display the video controls:

Video Scrubber: Changes the position and playback. The length of the bar corresponds to the time of the video. Advance or rewind the video by dragging along the bar.

Delete Recording: Press to delete the video. A confirmation screen displays. Press Yes to delete or No to cancel.

Pause/Play: Press to play or pause the video. The button will change when pressed.

Back: Press to display the previous screen.

Exit: Press to exit the current display.

Choose Video Overlay

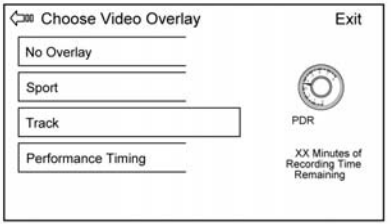

Press the Choose Video Overlay screen button to display the menu screen.

Select one:

- No Overlay
- Sport
- Track
- Performance Timing

No Overlay:

No vehicle data displays on top of the recorded video. Vehicle data is still available with the video when accessed in the toolbox software.

Sport:

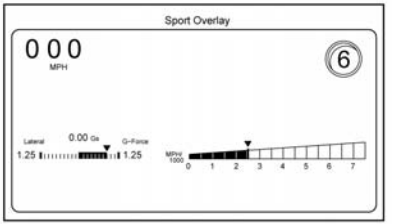

Displays these vehicle metrics:

- Vehicle Speed: Up to three digits are displayed in km/h or MPH depending on vehicle settings.
- Engine Rotations Per Minute (RPMs): The vertical line and triangle show current RPMs. As the RPMs increase, the green backfill follows.
- Transmission State (Current Gear): Automatic transmissions display PRDN. D can change to D1, D2, etc. When an automatic transmission is in manual shift mode, the display will change to M1, M2, etc. Manual transmissions display 1, 2, etc.
- Lateral G-Force Graphic: Left and Right G-Forces are displayed. The graphic fills to the left or the right depending on the measure value. The measured G-Force displays as a number at the top of the graphic.

Track:

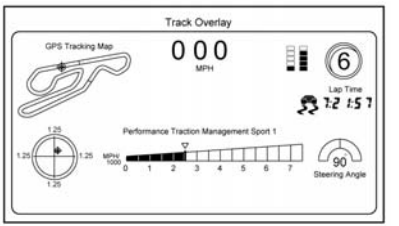

Displays these vehicle metrics:

- Vehicle Speed: Same as Sport.
- GPS Tracking Map: Shows the vehicle's current position relative to a known route.

- Engine Rotations Per Minute (RPMs): The vertical line and triangle indicate current RPMs. As the RPMs increase, the orange backfill follows.
- Transmission State (Current Gear): Same as Sport.
- Friction Bubble Graphic: Lateral and longitudinal G-Forces are displayed as a dot within a bubble. A red dot displays when the vehicle starts braking and turns green when the vehicle accelerates. The dot is white when the vehicle is not moving. A white dot is the default.
- Brake and Throttle Graphic: Displays the percentage value of brake and throttle pedal position from 0–100%.
- Steering Angle: The graphic fills from the center to the left or right depending on the direction of steering. The numerical steering angle displays below the graphic.
- Active Handling Active Indicator: The graphic only displays if the active handling systems are activated.
- Performance Traction Management (PTM) Mode: Displays the current PTM mode. The options are Wet, Dry, Sport 1, Sport 2, or Race.
- Current Lap Time: Displays the elapsed lap time if the finish line is defined and the vehicle has crossed the defined finish line at least once.

Performance Timing:

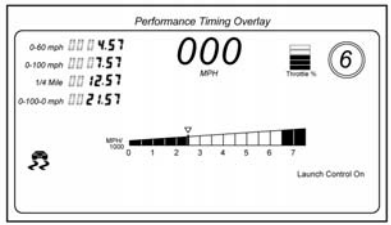

Displays these vehicle metrics:

- Vehicle Speed: Same as Sport.
- Engine Rotations Per Minute (RPMs): Same as Sport.
- Transmission State (Current Gear): Same as Sport.
- 0–100 km/h (0–60 mph), 0–200 km/h (0–100 mph), 400 m (1/4 th mi), and 0–200–0 km/h (0–100–0 mph): The timer starts recording as soon as the vehicle accelerates. As the vehicle passes each speed and distance milestone, it is displayed on the overlay.
- Throttle Position: Displays the percentage of throttle applied from 0–100%.
- Active Handling Active Indicator: The graphic only displays if the active handling systems are activated.

Naming Convention

The recorded video file name is stored as the recorded date and the length of the recording.

If the recorded session was recorded while the system was in Valet or Teen Mode, the file name will display the mode, date, and length of time.

Settings

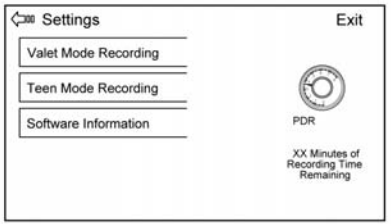

Press the Settings button from the PDR menu to display settings.

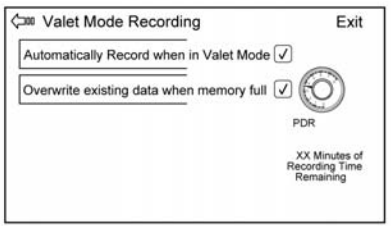

Valet Mode Recording: Allows recording preferences to be selected. It is recommended that a blank SD card be used. Available choices are:

- Automatically record when in Valet Mode: Enables the PDR to begin recording as soon as the vehicle is in Valet Mode.
- Overwrite existing data when memory full: Allows manual overwriting of previous recordings, one at a time starting with the oldest, when the current recording requires additional storage to continue.

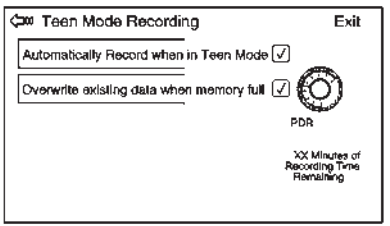

Teen Mode Recording: Allows the setting of recording preferences. It is recommended that a blank SD card be used. Available choices are:

- Automatically record when in Teen Mode: Enables the PDR to begin recording as soon as the vehicle is in Teen Mode.
- Overwrite existing data when memory full: Allows manual overwriting of previous recordings, one at a time starting with the oldest, when the current recording requires additional storage to continue.

Software Information: Displays PDR software information and version numbers.

Toolbox Software: Allows for the evaluation of driver and vehicle performance during a recorded event. See www.Corvette.com to download the software.

Climate Controls

Climate Control Systems
Dual Automatic Climate Control System 8-1

Air Vents
Air Vents 8-5

Maintenance
Passenger Compartment Air Filter 8-5

Climate Control Systems

Dual Automatic Climate Control System

The heating, cooling, and ventilation for the vehicle can be controlled with this system.

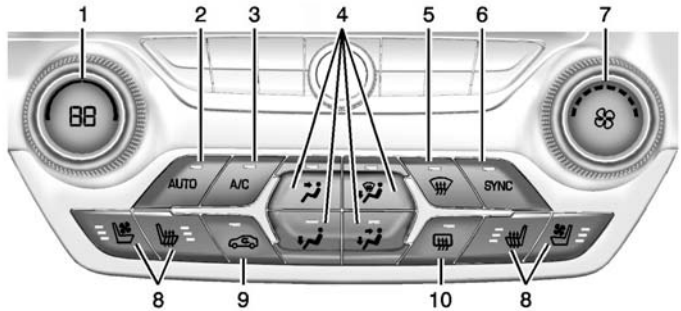

1. Driver Temperature Control
2. AUTO (Automatic Operation)
3. A/C (Air Conditioning)
4. Air Delivery Modes
5. Defrost
6. SYNC
7. Fan Control
8. Driver and Redundant Passenger Heated and Ventilated Front Seat Controls
9. Recirculation
10. Rear Window Defogger

Passenger Temperature Control

The passenger temperature control is below the passenger side air vent.

On/Off System Operation

Press AUTO to turn the system on. Turn the fan control knob completely counterclockwise to turn the fan off.

Automatic Operation

The system automatically controls the fan speed, air delivery, air conditioning, and recirculation in order to heat or cool the vehicle to the desired temperature.

When the AUTO indicator light is on, the system is in full automatic operation. If the air delivery mode or fan setting is manually adjusted or the A/C is turned off, the AUTO indicator turns off and displays will show the selected settings.

To place the system in automatic mode:

1. Press AUTO.
2. Set the temperature. Allow the system time to stabilize. Then adjust the temperature as needed for best comfort.

The system operates to reach the set temperature as quickly as possible. The AUTO control system works best with the windows up and the removable roof installed or the convertible top up.

Manual Operation

Driver and Passenger Temperature Control: The temperature can be adjusted separately for the driver and passenger.

Turn the knob clockwise or counterclockwise to increase or decrease the driver temperature setting. Press △ or ▽ to increase or decrease the passenger temperature setting.

SYNC: Press to link all climate zone settings to the driver settings. The SYNC indicator light will turn on. When the passenger temperature setting is adjusted, the SYNC indicator light turns off.

Fan Control: Turn the knob clockwise or counterclockwise to increase or decrease the fan speed. Turn the knob completely counterclockwise to turn the fan off.

Press AUTO to return to automatic operation.

Air Delivery Modes: Press , , , or to change the direction of the airflow. An indicator light comes on in the selected mode button.

Changing the mode cancels the automatic operation and the system goes into manual mode. Press AUTO to return to automatic operation.

(Vent): Air is directed to the instrument panel outlets.

(Floor): Air is directed to the floor outlets.

(Bi-Level): Air is directed to the instrument panel outlets and the floor outlets.

(Defog): Air is directed to the windshield and floor outlets to clear the windows of fog or moisture. The recirculation mode cannot be selected while in the defog mode.

(Defrost): Press to clear the windshield of fog or frost more quickly. Air is directed to the windshield and side window outlets. The recirculation mode cannot be selected while in defrost mode.

For best results, clear all snow and ice from the windshield before defrosting.

Do not drive the vehicle until all the windows are clear.

A/C (Air Conditioning): Press to turn the air conditioning on or off. If the fan is turned off the air conditioner will not run and the indicator light may turn off.

Press AUTO to return to automatic operation and the air conditioner runs as needed. When the indicator light is on, the air conditioner runs automatically to cool the air inside the vehicle or to dry the air as needed to defog the windshield faster.

A slight change in engine performance may be noticed when the air conditioning compressor shuts off and turns on again. This is normal. The system is designed to make adjustments to help with fuel economy while still maintaining the selected temperature.

If the A/C is turned off, automatic operation is cancelled.

(Recirculation): Press to turn on recirculation. An indicator light comes on. Air is recirculated to quickly cool the inside of the vehicle or reduce the entry of outside air and odors. Recirculation mode is not available in defrost or defog mode.

Rear Window Defogger

(Rear Window Defogger): Press to turn the rear window defogger on or off. An indicator light on the button comes on to show that the rear window defogger is on.

The defogger only works when the ignition is in ON/RUN. The defogger turns off if the ignition is in the ACC/ACCESSORY or LOCK/OFF position.

The rear window defogger can be set to automatic operation. See “Climate and Air Quality” under *Vehicle Personalization on page 5-45*. When auto rear defog is selected, the rear window defogger turns on automatically when the

interior temperature is cold and the outside temperature is about 4°C (40°F) and below. The auto rear defogger turns off automatically after about 10 minutes.

If equipped with heated outside rearview mirrors, they turn on with the rear window defogger and help to clear fog or frost from the surface of the mirror. See *Heated Mirrors on page 2-20*.

If equipped with a power convertible top, the rear window defogger and heated mirrors are automatically disabled when the power convertible top is moving or down.

⚠ Caution

Using a razor blade or sharp object on the inside rear window can damage the antenna or defogger. Repairs would not be covered by the vehicle warranty. Do not stick anything to the rear window.

/ (Driver and Passenger Heated and Ventilated Seats, If Equipped): Press to heat or ventilate the seat. See *Heated and Ventilated Front Seats on page 3-7*.

Remote Start Climate Control Operation (If Equipped): If remote start is used to start the vehicle, the climate control system will come on. The system uses the driver's previous settings to heat or cool the inside of the vehicle. The rear window defogger or heated outside rearview mirrors, if equipped, may come on based on cold ambient conditions. The rear defog indicator light may not come on during a remote start. The heated or ventilated seats may turn on if it is cold or hot outside. See *Remote Vehicle Start on page 2-9* and*Heated and Ventilated Front Seats on page 3-7* (if equipped).

Sensors

The interior cabin air temperature and solar sensor on top of the instrument panel near the windshield monitors the solar heat and measures the initial interior cabin temperature.

The climate control system uses the sensor information to adjust the temperature, fan speed, recirculation, and air delivery mode for best comfort.

The humidity and windshield temperature sensor is on the windshield glass inside surface near the rearview mirror. The automatic climate control system uses this sensor to receive information to determine the need for defogging.

If any of these sensors are blocked or covered, the automatic climate control system may not work properly.

There is also a sensor behind the front bumper. This sensor reads the outside air temperature and helps to maintain the temperature inside the vehicle. Any cover on the front of the vehicle could give a false reading in the temperature.

Air Vents

Use the tab on the air outlets to change the direction of the airflow.

Operation Tips

- Clear away any ice, snow, or leaves from the air inlets at the base of the windshield that may block the flow of air into the vehicle.
- Use of non-GM approved hood deflectors may adversely affect the performance of the system.
- Keep the area around the base of the instrument panel console and air path under the seats clear of objects to help circulate the air inside of the vehicle more effectively.

Maintenance

Passenger Compartment Air Filter

The passenger compartment air filter reduces dust, pollen, and other airborne irritants from outside air that is pulled into the vehicle. Reductions in airflow, which may occur more often in dusty areas, indicate that the filter may need to be replaced. See *Maintenance Schedule on page 11-2*.

⚠ Caution

Driving without a passenger compartment air filter in place can cause water and small particles, like paper and leaves, to be pulled into your climate control system which may cause damage to it. Make sure you always replace the old filter with a new one.

The passenger compartment air filter is on the passenger side of the engine compartment near the coolant surge tank. See *Engine Compartment Overview on page 10-7*.

To check or replace the air filter:

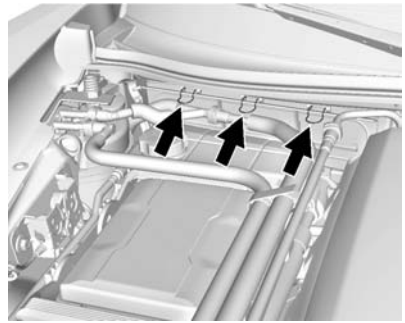

1. Release the retainer clips from the passenger compartment air filter cover. The PVC hoses may need to be held out of the way briefly to access the air filter cover.
2. Remove the cover.

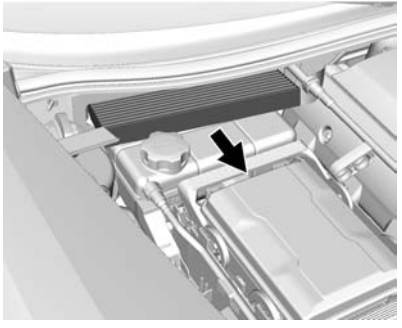

3. Remove the filter and install the new air filter.
4. Replace the filter cover.
5. Attach the retainer clips.

Driving and Operating

Driving Information
Distracted Driving 9-2
Defensive Driving 9-3
Drunk Driving 9-3
Control of a Vehicle 9-3
Steering 9-3
Off-Road Recovery 9-4
Loss of Control 9-4
Track Events and Competitive Driving 9-5
Driving on Wet Roads 9-10
Hill and Mountain Roads 9-11
Winter Driving 9-12
If the Vehicle Is Stuck 9-13
Vehicle Load Limits 9-14

Starting and Operating
New Vehicle Break-In 9-18
Front Air Dam 9-19
Carbon Fiber 9-19
Ignition Positions 9-19
Starting the Engine 9-21
Retained Accessory Power (RAP) 9-23
Shifting Into Park 9-23
Shifting out of Park 9-24
Parking (Manual Transmission) 9-25
Parking over Things That Burn 9-25
Active Fuel Management® . . . 9-25

Engine Exhaust
Engine Exhaust 9-26
Running the Vehicle While Parked 9-26

Automatic Transmission
Automatic Transmission 9-27
Manual Mode 9-28

Manual Transmission
Manual Transmission 9-31
Active Rev Match 9-33

Brakes
Antilock Brake System (ABS) 9-34
Electric Parking Brake 9-35
Brake Assist 9-36
Hill Start Assist (HSA) 9-37

Ride Control Systems
Traction Control/Electronic Stability Control 9-37
Driver Mode Control 9-39
Competitive Driving Mode . . . 9-43
Limited-Slip Differential (Except Z51 and Z06) 9-47
Limited-Slip Differential (Z51 and Z06 Only) 9-47

Cruise Control
Cruise Control 9-48

Driver Assistance Systems
Rear Vision Camera (RVC) 9-51

Fuel
Fuel 9-53
California Fuel Requirements 9-54
Fuels in Foreign Countries . . . 9-54
Fuel Additives 9-54
Filling the Tank 9-55
Filling a Portable Fuel Container 9-56

Trailer Towing
General Towing Information 9-57

Conversions and Add-Ons
Add-On Electrical Equipment 9-57

Driving Information

Distracted Driving

Distraction comes in many forms and can take your focus from the task of driving. Exercise good judgment and do not let other activities divert your attention away from the road. Many local governments have enacted laws regarding driver distraction. Become familiar with the local laws in your area.

To avoid distracted driving, always keep your eyes on the road, hands on the wheel, and mind on the drive.

- Do not use a phone in demanding driving situations. Use a hands-free method to place or receive necessary phone calls.
- Watch the road. Do not read, take notes, or look up information on phones or other electronic devices.
- Designate a front seat passenger to handle potential distractions.
- Become familiar with vehicle features before driving, such as programming favorite radio stations and adjusting climate control and seat settings. Program all trip information into any navigation device prior to driving.
- Wait until the vehicle is parked to retrieve items that have fallen to the floor.
- Stop or park the vehicle to tend to children.
- Keep pets in an appropriate carrier or restraint.
- Avoid stressful conversations while driving, whether with a passenger or on a cell phone.

⚠ Warning

Taking your eyes off the road too long or too often could cause a crash resulting in injury or death. Focus your attention on driving.

Refer to the infotainment manual for more information on using that system and the navigation system, if equipped, including pairing and using a cell phone.

Defensive Driving

Defensive driving means “always expect the unexpected.” The first step in driving defensively is to wear the safety belt. See *Safety Belts on page 3-8*.

- Assume that other road users (pedestrians, bicyclists, and other drivers) are going to be careless and make mistakes. Anticipate what they might do and be ready.
- Allow enough following distance between you and the driver in front of you.
- Focus on the task of driving.

Drunk Driving

Death and injury associated with drinking and driving is a global tragedy.

⚠ Warning

Drinking and then driving is very dangerous. Your reflexes, perceptions, attentiveness, and judgment can be affected by even a small amount of alcohol. You can have a serious — or even fatal — collision if you drive after drinking.

Do not drink and drive or ride with a driver who has been drinking. Ride home in a cab; or if you are with a group, designate a driver who will not drink.

Control of a Vehicle

Braking, steering, and accelerating are important factors in helping to control a vehicle while driving.

Steering

Electric Power Steering

The vehicle has electric power steering. It does not have power steering fluid. Regular maintenance is not required.

If power steering assist is lost due to a system malfunction, the vehicle can be steered, but may require increased effort.

See your dealer if there is a problem.

If the steering wheel is turned until it reaches the end of its travel and is held against that position for an extended period of time, power steering assist may be reduced.

If the steering assist is used for an extended period of time, power assist may be reduced.

Normal use of the power steering assist should return when the system cools down.

See specific vehicle steering messages under *Service Vehicle Messages on page 5-42*. See your dealer if there is a problem.

Curve Tips

- Take curves at a reasonable speed.
- Reduce speed before entering a curve.
- Maintain a reasonable steady speed through the curve.
- Wait until the vehicle is out of the curve before accelerating gently into the straightaway.

Steering in Emergencies

- There are some situations when steering around a problem may be more effective than braking.
- Holding both sides of the steering wheel allows you to turn 180 degrees without removing a hand.
- The Antilock Brake System (ABS) allows steering while braking.

Off-Road Recovery

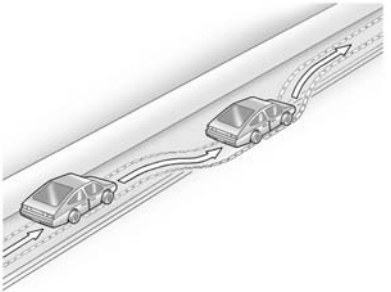

The vehicle's right wheels can drop off the edge of a road onto the shoulder while driving. Follow these tips:

1. Ease off the accelerator and then, if there is nothing in the way, steer the vehicle so that it straddles the edge of the pavement.
2. Turn the steering wheel about one-eighth of a turn, until the right front tire contacts the pavement edge.
3. Turn the steering wheel to go straight down the roadway.

Loss of Control

Skidding

There are three types of skids that correspond to the vehicle's three control systems:

- Braking Skid — wheels are not rolling.

- Steering or Cornering Skid — too much speed or steering in a curve causes tires to slip and lose cornering force.
- Acceleration Skid — too much throttle causes the driving wheels to spin.

Defensive drivers avoid most skids by taking reasonable care suited to existing conditions, and by not overdriving those conditions. But skids are always possible.

If the vehicle starts to slide, follow these suggestions:

- Ease your foot off the accelerator pedal and steer the way you want the vehicle to go. The vehicle may straighten out. Be ready for a second skid if it occurs.
- Slow down and adjust your driving according to weather conditions. Stopping distance can be longer and vehicle control can be affected when traction is reduced by water, snow, ice, gravel, or other material on the road. Learn to recognize warning clues — such as enough water, ice, or packed snow on the road to make a mirrored surface — and slow down when you have any doubt.
- Try to avoid sudden steering, acceleration, or braking, including reducing vehicle speed by shifting to a lower gear. Any sudden changes could cause the tires to slide.

Remember: Antilock brakes help avoid only the braking skid.

Track Events and Competitive Driving

Participating in track events or other competitive driving without following the instructions provided may affect the vehicle warranty. See the warranty manual before using the vehicle for racing or other competitive driving.

Refer to *Competitive Driving Mode on page 9-43*.

Be sure to follow all service procedures before driving the vehicle at track events or competitively.

Engine Oil

> **⚠ Caution**
>
> If the vehicle is used for track events and competitive driving, the engine may use more oil than it would with normal use. Low oil levels can damage the engine. Check the oil level often and maintain the proper level. See *Engine Oil on page 10-12*.

> **⚠ Caution**
>
> Not changing the engine oil to 15W-50 may cause engine damage. Engine oil must be changed to 15W-50 synthetic. See *Capacities and Specifications on page 12-2*.

Z51 and Z06 Only: Check the oil level often during track events and competitive driving and keep the level at or near 0.5 L (0.5 qt) above the upper mark that shows the proper operating range on the engine oil dipstick. After the competitive driving, remove excess oil so that the level on the dipstick is not above the upper mark that shows the proper operating range.

Except Z51 and Z06: Additional oil fill above the upper mark on the dipstick is not recommended for track events or other competitive driving. Check the oil level often during racing or other competitive driving and keep the level at or near the upper mark that shows the proper operating range on the engine oil dipstick. After the competitive driving, remove excess oil so that the level on the dipstick is not above the upper mark that shows the proper operating range.

Brake Fluid

Replace existing brake fluid with a qualified high performance brake fluid from a sealed container. Brake fluid with a dry boiling point >279°C (534°F) is qualified. If high performance brake fluid is used, replace it with GM approved brake fluid before driving on public roads. If high performance brake fluid is in the vehicle and the age of the brake fluid is over a month old or unknown, replace the brake fluid before track events and competitive driving. Do not use silicone or DOT-5 brake fluids.

Load Limit

Z51 Only: Limit vehicle load to the driver only, with no other cargo. Inflate tires to 180 kPa (26 psi) and drive at a maximum speed of 280 km/h (174 mph).

Z06 Only: Limit vehicle load to the driver only, with no other cargo. Inflate tires to 180 kPa (26 psi) and drive at a maximum speed of 296 km/h (184 mph).

Wheel Alignment

⚠ Caution

Using these wheel alignment settings may cause excessive tire wear. Only use these wheel alignment settings for racing or competitive driving. Excessive tire wear is not covered under the vehicle warranty.

If the vehicle is equipped with the Z51 package or is a Z06, the racing and competitive driving wheel alignment settings should be set as follows:

Alignment should only be done by adjusting the lower control arm cam bolts and by removing a maximum of one washer between the upper control arms and frame.

Alignment values are targets, see your dealer for tolerances.

Front (per corner)

- Caster: +7.0 degrees

- Camber: -2.0 degrees
- Toe: 0.05 degrees toe in

Rear (per corner)

- Caster: 0 degrees
- Camber: -2.0 degrees
- Toe: 0.05 degrees toe in

Thrust Angle: 0 degrees

Rear Axle Fluid

> **⚠ Caution**
>
> During a first time track or racing event, high rear axle temperatures can occur. Damage could be caused to the rear axle and would not be covered by the vehicle warranty. Do not drive as long or as fast the first time the vehicle is driven on the track or raced.

The rear axle fluid temperatures may be higher than when driving in severe conditions. Drain and refill with new fluid after the first racing or competitive driving event, and then after every 24 hours of racing or competitive driving. See *Recommended Fluids and Lubricants on page 11-12*.

General Information

If reduced performance is experienced during track events or competitive driving, turning off the A/C will help to improve engine performance.

Maintain a mixture of 40% DEX-COOL coolant and 60% clean, drinkable water to optimize engine performance.

The front license plate bracket or aero panel should be removed for track events and competitive driving to improve engine performance.

Rotor Cooling Ring

The following installation procedure is for Z51, and only if the vehicle is equipped with front dual cast brake rotors along with the supplied brake cooling ring kit. See your dealer for information.

If the vehicle is a Z51 and equipped with a one piece brake rotor a cooling ring is not required.

> **⚠ Caution**
>
> Do not leave rotor cooling rings installed after a track event, as this can cause corrosion with long-term use. Rotor cooling rings are for track use only. Track driving without the rotor cooling rings may result in brake pedal fade.

Installation:

1. Remove the front wheels.
2. Cut three 150 mm (6 in) lengths of safety wire specified to T304 Stainless Steel, 0.041 in nominal diameter, not included.
3. Form each into a U shape with a 20 mm (0.75 in) flat area in the center of the wire.

4. Place the rotor ring in the gap between the rotor brake plate and rotor hat, with the holes on each side of the rotor spoke on the outboard side of the rotor.

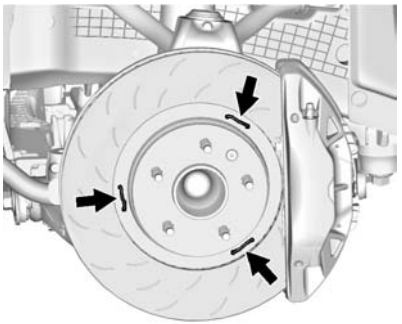

5. Place the U-shaped wire through the holes in the rotor cooling ring.
6. Bring the ends of the wire tight around the corresponding rotor spoke.
7. Twist the safety wire into six to eight twists per 2.54 cm (1 in).
8. Bend the twisted wire so it is flush with the inside of the rotor ring to prevent contact with the caliper or brake hoses.
9. Verify that the rotor rings and safety wire do not contact any other components.
10. Reinstall the wheel using the specific wheel nut torque. See *Capacities and Specifications on page 12-2*.

If additional brake cooling is required, the grille mesh in the lower corners of the front grille in front of the brake duct can be removed. This is not reversible, and a replacement grille will not be covered by the vehicle warranty. If this is done, it is recommended that the gap between the fascia and the cooling duct be taped over.

Brake Burnishing

New brake pads must be burnished before racing or other competitive driving.

⚠ Caution

Performing the brake burnish procedure on a base brake system can result in brake damage.

⚠ Caution

The new vehicle break-in period should be completed before performing the brake burnish procedure, otherwise damage may occur to the powertrain/engine. See *New Vehicle Break-In on page 9-18*.

⚠ Caution

Brake pedal fade will occur during any track burnish procedure and can cause brake pedal travel and

(Continued)

Caution (Continued)

force to increase. This could extend stopping distance until the brakes are fully burnished.

When this procedure is performed as instructed, it will not damage the brakes. The brake pads will smoke and produce an odor. The braking force and pedal travel may increase. After the procedure, the brake pads may appear white at the rotor contact.

Perform this procedure only on dry pavement, in a safe manner, and in compliance with all local and state ordinances/laws regarding motor vehicle operation.

Brake Burnish Procedure (Z51 and Z06 without Z07 Performance Package)

1. Apply the brakes 25 times starting at 100 km/h (60 mph) to 50 km/h (30 mph) while decelerating at 0.4 g. This is a medium brake application. Drive for at least 1 km (0.6 mi) between applying the brakes. This first step may be skipped if there are more than 320 km (200 mi) on the brake pads.
2. Repeatedly apply the brakes from 100 km/h (60 mph) to 25 km/h (15 mph) while decelerating at 0.8 g. This is a hard brake application, without activating the Antilock Brake System (ABS). Drive for at least 1 km (0.6 mi) between stops. Repeat until the brake pedal travel starts to increase. Depending on conditions, this should take no longer than 25 brake applications.
3. Cool down: Drive at 100 km/h (60 mph) for approximately 15 km (10 mi) without using the brakes.
4. Apply the brakes 25 times from 100 km/h (60 mph) to 50 km/h (30 mph) while decelerating at 0.4 g. This is a medium brake application. Drive for at least 1 km (0.6 mi) between applications.

Street High Performance Brake Burnishing Procedure (Z06 with Z07 Performance Package)

1. From a stop, accelerate as rapidly as possible without activating traction control to a speed of 100 km/h (60 mph).
2. Use enough pedal force to completely stop the vehicle in four to five seconds. If ABS activates, braking is too hard.
3. Repeat Steps 1 and 2 – 50 times. This should take about 10 minutes.
4. After completing the 50 stops, cool the brakes by driving for km (5 mi) at 100 km/h (60 mph)

As with all high performance brake systems, some amount of brake squeal is normal.

Racing/Track Brake Burnishing Procedure (Z06 with Z07 Performance Package)

This procedure should only be run on a track and only on dry pavement.

> ⚠ **Caution**
>
> Brake pedal fade will occur during this track burnish procedure and can cause brake pedal travel and force to increase. This could extend stopping distance until the brakes are fully burnished.

1. Drive a normal first lap, not too aggressively.
2. Laps 2 and 3 should be gradually driven faster and more aggressively, while allowing for reduced brake output and increased stopping distance due to brake fade.
3. Drive Lap 4 near full speed, while allowing for reduced brake output and increased stopping distance due to brake fade.
4. Laps 5 and 6 should be cool down laps.
5. Lap 7 should be normal driving or an easy out lap.

Z07 Performance Package

The Z07 Performance Package has an installed Stage 2 Aero Package, which consists of a front splitter with short end caps, rocker panel extensions, and a rear spoiler.

Stage 3 Aero components are delivered but not installed on the vehicle. These are intended to be installed for track use only. The components include:

- Front splitter tall end caps that replace the front splitter short end caps.
- A center transparent wicker bill for the rear spoiler.

> ⚠ **Warning**
>
> Changing the following track settings could reduce tire traction and could cause a crash. Do not change the track settings

The track settings for the Z07 Performance Package with the Stage 3 Aero Package are:

- The front splitter tall end caps installed.
- The center transparent wicker bill installed all the way up on the rear spoiler.
- The Driver Mode Selector in Track Mode.

Driving on Wet Roads

Rain and wet roads can reduce vehicle traction and affect your ability to stop and accelerate. Always drive slower in these types

of driving conditions and avoid driving through large puddles and deep-standing or flowing water.

⚠ Warning

Wet brakes can cause crashes. They might not work as well in a quick stop and could cause pulling to one side. You could lose control of the vehicle.

After driving through a large puddle of water or a car/vehicle wash, lightly apply the brake pedal until the brakes work normally.

Flowing or rushing water creates strong forces. Driving through flowing water could cause the vehicle to be carried away. If this happens, you and other vehicle occupants could drown. Do not ignore police warnings and be very cautious about trying to drive through flowing water.

Hydroplaning

Hydroplaning is dangerous. Water can build up under the vehicle's tires so they actually ride on the water. This can happen if the road is wet enough and you are going fast enough. When the vehicle is hydroplaning, it has little or no contact with the road.

There is no hard and fast rule about hydroplaning. The best advice is to slow down when the road is wet.

Other Rainy Weather Tips

Besides slowing down, other wet weather driving tips include:

- Allow extra following distance.
- Pass with caution.
- Keep windshield wiping equipment in good shape.
- Keep the windshield washer fluid reservoir filled.
- Have good tires with proper tread depth. See *Tires on page 10-46*.
- Turn off cruise control.

Hill and Mountain Roads

Driving on steep hills or through mountains is different than driving on flat or rolling terrain. Tips for driving in these conditions include:

- Keep the vehicle serviced and in good shape.
- Check all fluid levels and brakes, tires, cooling system, and transmission.
- Shift to a lower gear when going down steep or long hills.

⚠ Warning

Using the brakes to slow the vehicle on a long downhill slope can cause brake overheating, can reduce brake performance, and could result in a loss of braking. Shift the transmission to a lower gear to let the engine assist the brakes on a steep downhill slope.

⚠ Warning

Coasting downhill in N (Neutral) or with the ignition off is dangerous. This can cause overheating of the brakes and loss of steering. Always have the engine running and the vehicle in gear.

- Stay in your own lane. Do not swing wide or cut across the center of the road. Drive at speeds that let you stay in your own lane.
- Be alert on top of hills; something could be in your lane (stalled car, accident).
- Pay attention to special road signs (falling rocks area, winding roads, long grades, passing or no-passing zones) and take appropriate action.

Winter Driving

Driving on Snow or Ice

Drive carefully when there is snow or ice between the tires and the road, creating less traction or grip. Wet ice can occur at about 0°C (32° F) when freezing rain begins to fall, resulting in even less traction. Avoid driving on wet ice or in freezing rain until roads can be treated with salt or sand.

Drive with caution, whatever the condition. Accelerate gently so traction is not lost. Accelerating too quickly causes the wheels to spin and makes the surface under the tires slick, so there is even less traction.

Traction Control should be turned on. See *Traction Control/Electronic Stability Control on page 9-37*.

The Antilock Brake System (ABS) improves vehicle stability during hard stops on slippery roads, but apply the brakes sooner than when on dry pavement. See *Antilock Brake System (ABS) on page 9-34*.

Allow greater following distance on any slippery road and watch for slippery spots. Icy patches can occur on otherwise clear roads in shaded areas. The surface of a curve or an overpass can remain icy when the surrounding roads are clear. Avoid sudden steering maneuvers and braking while on ice.

Turn off cruise control on slippery surfaces.

Blizzard Conditions

Being stuck in snow can be a serious situation. Stay with the vehicle unless there is help nearby. If possible, use Roadside Assistance. See *Roadside Assistance Program on page 13-5*. To get help and keep everyone in the vehicle safe:

- Turn on the hazard warning flashers.

- Tie a red cloth to an outside mirror.

⚠ Warning

Snow can trap engine exhaust under the vehicle. This may cause exhaust gases to get inside. Engine exhaust contains carbon monoxide (CO) which cannot be seen or smelled. It can cause unconsciousness and even death.

If the vehicle is stuck in the snow:

- Clear away snow from around the base of your vehicle, especially any that is blocking the exhaust pipe.
- Check again from time to time to be sure snow does not collect there.
- Open a window about 5 cm (2 in) on the side of the vehicle that is away from the wind to bring in fresh air.

(Continued)

Warning (Continued)

- Fully open the air outlets on or under the instrument panel.
- Adjust the climate control system to a setting that circulates the air inside the vehicle and set the fan speed to the highest setting. See “Climate Control Systems.”

For more information about carbon monoxide, see *Engine Exhaust on page 9-26*.

To save fuel, run the engine for only short periods as needed to warm the vehicle and then shut the engine off and close the window most of the way to save heat. Repeat this until help arrives but only when you feel really uncomfortable from the cold. Moving about to keep warm also helps.

If it takes some time for help to arrive, now and then when you run the engine, push the accelerator pedal slightly so the engine runs faster than the idle speed. This keeps the battery charged to restart the vehicle and to signal for help with the headlamps. Do this as little as possible to save fuel.

If the Vehicle Is Stuck

Slowly and cautiously spin the wheels to free the vehicle when stuck in sand, mud, ice, or snow.

If stuck too severely for the traction system to free the vehicle, turn the traction system off and use the rocking method. See *Traction Control/Electronic Stability Control on page 9-37*.

⚠ Warning

If the vehicle's tires spin at high speed, they can explode, and you or others could be injured. The

(Continued)

Warning (Continued)

vehicle can overheat, causing an engine compartment fire or other damage. Spin the wheels as little as possible and avoid going above 56 km/h (35 mph).

Rocking the Vehicle to Get it Out

Turn the steering wheel left and right to clear the area around the front wheels. Turn off any traction system. Shift back and forth between R (Reverse) and a low forward gear, spinning the wheels as little as possible. To prevent transmission wear, wait until the wheels stop spinning before shifting gears. Release the accelerator pedal while shifting, and press lightly on the accelerator pedal when the transmission is in gear. Slowly spinning the wheels in the forward and reverse directions causes a rocking motion that could free the vehicle. If that does not get the vehicle out after a few tries, it might need to be towed out. If the vehicle does need to be towed out, see *Towing the Vehicle on page 10-82*.

Vehicle Load Limits

It is very important to know how much weight your vehicle can carry. This weight is called the vehicle capacity weight and includes the weight of all occupants, cargo, and all nonfactory-installed options. Two labels on your vehicle show how much weight it may properly carry: the Tire and Loading Information label and the Certification label.

⚠ Warning

Do not load the vehicle any heavier than the Gross Vehicle Weight Rating

(Continued)

Warning (Continued)

(GVWR), or either the maximum front or rear Gross Axle Weight Rating (GAWR). This can cause systems to break and change the way the vehicle handles. This could cause loss of control and a crash. Overloading can also shorten the life of the vehicle.

Tire and Loading Information Label

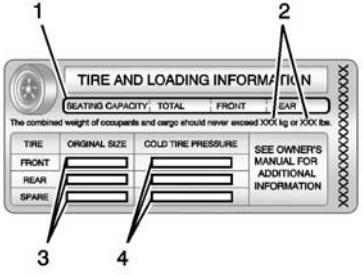

Label Example

A vehicle-specific Tire and Loading Information label is attached to the center pillar (B-pillar) of your vehicle. With the driver door open, you will find the label attached below the door latch. This label shows the number of occupant seating positions (1), and the maximum vehicle capacity weight (2) in kilograms and pounds.

The Tire and Loading Information label also shows the size of the original equipment tires (3) and the recommended cold tire inflation pressures (4). For more information on tires and inflation see *Tires on page 10-46* and *Tire Pressure on page 10-55*.

There is also important loading information on the vehicle Certification label. It tells you the Gross Vehicle Weight Rating (GVWR) and the Gross Axle Weight Rating (GAWR) for the front and rear axle. See “Certification Label” later in this section.

“Steps for Determining Correct Load Limit–

1. Locate the statement "The combined weight of occupants and cargo should never exceed XXX kg or XXX lbs." on your vehicle’s placard.
2. Determine the combined weight of the driver and passengers that will be riding in your vehicle.
3. Subtract the combined weight of the driver and passengers from XXX kg or XXX lbs.
4. The resulting figure equals the available amount of cargo and luggage load capacity. For example, if the "XXX" amount equals 1400 lbs. and there will be five 150 lb passengers in your vehicle, the amount of available cargo and luggage load capacity is 650 lbs. (1400-750 (5 x 150) = 650 lbs.)

5. Determine the combined weight of luggage and cargo being loaded on the vehicle. That weight may not safely exceed the available cargo and luggage load capacity calculated in Step 4.
6. If your vehicle will be towing a trailer, load from your trailer will be transferred to your vehicle. Consult this manual to determine how this reduces the available cargo and luggage load capacity of your vehicle.”

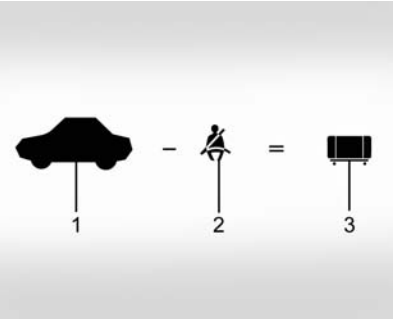

Example 1

1. Vehicle Capacity Weight for Example 1 = 181 kg (400 lbs)
2. Subtract Occupant Weight @ 68 kg (150 lbs) × 1 = 68 kg (150 lbs)
3. Available Occupant and Cargo Weight = 113 kg (250 lbs)

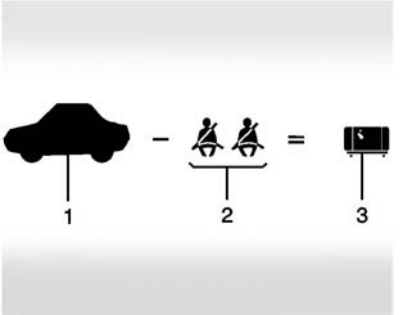

Example 2

1. Vehicle Capacity Weight for Example 2 = 181 kg (400 lbs)
2. Subtract Occupant Weight @ 68 kg (150 lbs) × 2 = 136 kg (300 lbs)
3. Available Cargo Weight = 45 kg (100 lbs)

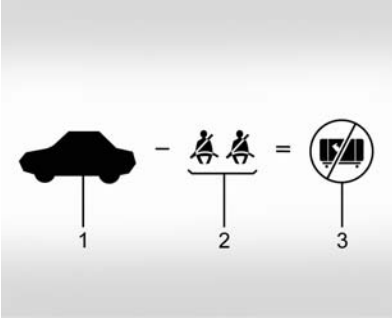

Example 3

1. Vehicle Capacity Weight for Example 3 = 181 kg (400 lbs)
2. Subtract Occupant Weight @ 91 kg (200 lbs) × 2 = 181 kg (400 lbs)
3. Available Cargo Weight = 0 kg (0 lbs)

Refer to your vehicle's Tire and Loading Information label for specific information about your vehicle's capacity weight and seating positions. The combined weight of the driver, passengers and cargo should never exceed your vehicle's capacity weight.

Certification Label

A vehicle-specific Certification label is attached to the rear edge of the driver door. It tells you the gross weight capacity of your vehicle, called the Gross Vehicle Weight Rating (GVWR). The GVWR includes the weight of the vehicle, all occupants, fuel and cargo. Never exceed the GVWR for your vehicle, or the Gross Axle Weight Rating (GAWR) for either the front or rear axle.

Do not load your vehicle with more weight than it was designed to carry. See “Steps for Determining Correct Load Limit” earlier in this section.

⚠ Warning

Do not load the vehicle any heavier than the Gross Vehicle Weight Rating (GVWR), or either the maximum front or rear Gross Axle Weight Rating (GAWR). This can cause systems to break and change the way the vehicle handles. This could cause loss of control and a crash. Overloading can also shorten the life of the vehicle.

⚠ Caution

Overloading the vehicle may cause damage. Repairs would not be covered by the vehicle warranty. Do not overload the vehicle.

If you put things inside your vehicle — like suitcases, tools, packages or anything else — they will go as fast as the vehicle goes. If you have to stop or turn quickly, or if there is a crash, they will keep going.

⚠ Warning

Things you put inside your vehicle can strike and injure people in a sudden stop or turn, or in a crash.

(Continued)

Warning (Continued)

- Put things in the rear area of your vehicle. Try to spread the weight evenly.
- Never stack heavier things, like suitcases, inside the vehicle so that some of them are above the tops of the seats.
- Do not leave an unsecured child restraint in your vehicle.
- When you carry something inside the vehicle, secure it whenever you can.

Starting and Operating

New Vehicle Break-In

Follow these recommended guidelines during the first 2 414 km (1,500 mi) of driving this vehicle. Parts have a break-in period and performance will be better in the long run.

For the first 322 km (200 mi):

- To break in new tires, drive at moderate speeds and avoid hard cornering for the first 322 km (200 mi).
- New brake linings also need a break- in period. Avoid making hard stops during the first 322 km (200 mi). This is recommended every time brake linings are replaced.

For the first 800 km (500 mi):

- Avoid full throttle starts and abrupt stops.

- Do not exceed 4000 rpm.
- Avoid driving at any one constant speed, fast or slow, including the use of cruise control.
- Avoid downshifting to brake or slow the vehicle when the engine speed will exceed 4000 rpm.
- Do not let the engine labor. Never lug the engine. With a manual transmission, shift to the next lower gear. This rule applies at all times, not just during the break-in period.

For the first 2 414 km (1,500 mi):

- Do not participate in track events, sport driving schools, or similar activities during the first 2 414 km (1,500 mi).
- Check engine oil with every refueling and add if necessary. Oil and fuel consumption may be higher than normal during the first 2 414 km (1,500 mi).

Front Air Dam

If equipped, the front air dam has minimal ground clearance.

Under normal operation, the components will occasionally contact some road surfaces (speed bumps, driveway ramps, etc.). This can be heard inside the vehicle as a scraping noise. This is normal and does not indicate a problem.

Use care when approaching bumps or objects on road surfaces and avoid them when possible.

Carbon Fiber

This vehicle may be equipped with carbon fiber parts. Dealer-installed accessories may also contain carbon fiber. Some vehicles have a carbon fiber splitter and rocker extension. Do not stand on the rocker extension or use it as a step, as it could break.

⚠ Warning

The exposed edges of carbon fiber parts can be sharp when damaged. You or others could be injured. Use caution when washing the vehicle, coming in contact with damaged carbon fiber parts, or removing these parts. See your dealer for replacement.

Ignition Positions

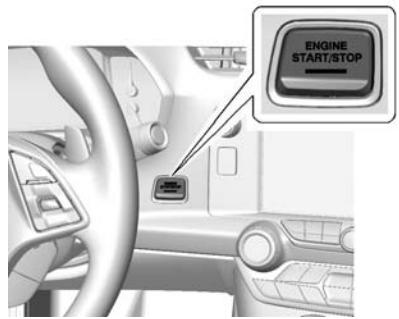

The vehicle has an electronic keyless ignition with pushbutton start.

Pressing the button cycles it through three modes: ACC/ACCESSORY, ON/RUN/START, and Stopping the Engine/OFF.

The Remote Keyless Entry (RKE) transmitter must be in the vehicle for the system to operate. If the pushbutton start is not working, the vehicle may be near a strong radio antenna signal causing interference to the Keyless Access system. See *Remote Keyless Entry (RKE) System Operation on page 2-3*.

To shift out of P (Park), the vehicle must be in ON/RUN and the brake pedal must be applied.

Stopping the Engine/OFF (No Indicator Lights): When the vehicle is stopped, press the ENGINE START/STOP button once to turn the engine off.

If the vehicle is in P (Park), the ignition will turn off, and Retained Accessory Power (RAP) will remain active. See *Retained Accessory Power (RAP) on page 9-23*.

Automatic Transmission

If the vehicle is not in P (Park), the ignition will return to ACC/ACCESSORY and display a message in the Driver Information Center (DIC). See *Transmission Messages on page 5-44*. When the vehicle is shifted into P (Park), the ignition system will switch to OFF.

Manual Transmission

If the vehicle is stationary, the ignition will turn OFF, and Retained Accessory Power (RAP) will remain active. See *Retained Accessory Power (RAP) on page 9-23*.

Do not turn the engine off when the vehicle is moving. This will cause a loss of power assist in the brake and steering systems and disable the airbags.

If the vehicle must be shut off in an emergency:

1. Brake using a firm and steady pressure. Do not pump the brakes repeatedly. This may deplete power assist, requiring increased brake pedal force.
2. Shift the vehicle to N (Neutral). This can be done while the vehicle is moving. After shifting to N (Neutral), firmly apply the brakes and steer the vehicle to a safe location.
3. Come to a complete stop. Shift to P (Park) with an automatic transmission, or Neutral with a manual transmission. Turn the ignition to LOCK/OFF.
4. Set the parking brake. See *Electric Parking Brake on page 9-35*.

⚠ Warning

Turning off the vehicle while moving may cause loss of power assist in the brake and steering systems and disable the airbags. While driving, only shut the vehicle off in an emergency.

If the vehicle cannot be pulled over, and must be shut off while driving, press and hold the ENGINE START/STOP button for longer than two seconds, or press twice within five seconds.

ACC/ACCESSORY (Amber Indicator Light): This mode allows the use of some electrical accessories when the engine is off.

With the ignition off, pressing the button one time without the brake pedal applied will place the ignition system in ACC/ACCESSORY.

The ignition will switch from ACC/ACCESSORY to OFF after five minutes to prevent battery rundown.

ON/RUN/START (Green Indicator Light): This mode is for driving and starting. With the ignition off, and the brake pedal applied, pressing the button once will place the ignition system in ON/RUN/START. Once engine cranking begins, release the button. Engine cranking will continue until the engine starts. See *Starting the Engine on page 9-21*. The ignition will then remain in ON/RUN.

Service Only Mode

This power mode is available for service and diagnostics, and to verify the proper operation of the malfunction indicator lamp as may be required for emission inspection purposes. With the vehicle off, and the brake pedal not applied, pressing and holding the button for more than five seconds will place the vehicle in Service Only Mode. The instruments and audio systems will operate as they do in ON/RUN, but the vehicle will not be able to be driven. The engine will not start in Service Only Mode. Press the button again to turn the vehicle off.

Starting the Engine

Move the shift lever to P (Park) or N (Neutral) for an automatic transmission. For a manual transmission the vehicle can be started in Neutral or any other gear as long as the clutch pedal is fully pressed. To restart a vehicle with a manual transmission when it is already moving, use the Neutral position only. To restart a vehicle with an automatic transmission when it is already moving, use N (Neutral).

⚠ Caution

If you add electrical parts or accessories, you could change the way the engine operates. Any resulting damage would not be covered by the vehicle warranty. See *Add-On Electrical Equipment on page 9-57*.

⚠ Caution

Do not try to shift to P (Park) if the vehicle is moving. If you do, you could damage the transmission. Shift to P (Park) only when the vehicle is stopped.

The RKE transmitter must be inside the vehicle for the ignition to work.

Cell phone chargers can interfere with the operation of the Keyless Access system. Battery chargers should not be plugged in when starting or turning off the engine.

To start the vehicle:

1. For vehicles with an automatic transmission, press the brake pedal, then press the ENGINE START/STOP button on the instrument panel. For vehicles with a manual transmission, press the clutch pedal first, then press the ENGINE START/STOP button.

   If there is no RKE transmitter in the vehicle or if there is something causing interference with it, the DIC will display a message. See *Key and Lock Messages on page 5-38*.

2. When the engine begins cranking, let go of the button and the engine cranks automatically until it starts. If the battery in the RKE transmitter is weak, the DIC will display a message. The vehicle can still be driven.

   See “Starting the Vehicle with a Low Transmitter Battery” under *Remote Keyless Entry (RKE) System Operation on page 2-3*.

   If the remote transmitter battery is dead, insert it into the steering column transmitter pocket to enable engine starting. See “NO REMOTE KEY WAS DETECTED PLACE KEY IN TRANSMITTER POCKET THEN START YOUR VEHICLE” under *Key and Lock Messages on page 5-38*.

3. Do not race the engine immediately after starting it. Operate the engine and transmission gently until the oil warms up and lubricates all moving parts.

4. If the engine does not start and no DIC message is displayed, wait 15 seconds before trying again to let the cranking motor cool down.

   If the engine does not start after five to 10 seconds, especially in very cold weather (below −18°C or 0°F), it could be flooded with too much gasoline. Try pushing the accelerator pedal all the way

to the floor while cranking for up to 15 seconds maximum. Wait at least 15 seconds between each try, to allow the cranking motor to cool down. When the engine starts, let go of the accelerator. If the vehicle starts briefly but then stops again, repeat these steps. This clears the extra gasoline from the engine.

⚠ Caution

Cranking the engine for long periods of time, by returning the ignition to the START position immediately after cranking has ended, can overheat and damage the cranking motor, and drain the battery. Wait at least 15 seconds between each try, to let the cranking motor cool down.

Stopping the Engine

If the vehicle has an automatic transmission, move the shift lever to P (Park) and press and hold the ENGINE START/STOP button on the instrument panel, until the engine shuts off. If the shift lever is not in P (Park), the engine shuts off and the vehicle goes into the accessory mode. The DIC displays SHIFT TO PARK. Once the shift lever is moved to P (Park), the vehicle turns off. If the vehicle has a manual transmission, move the shift lever to R (Reverse) and set the parking brake after turning off the engine by pressing and holding the ENGINE START/STOP button.

If the RKE transmitter is not detected inside the vehicle when it is turned to off, the DIC displays a message.

See *Key and Lock Messages on page 5-38*.

Retained Accessory Power (RAP)

These vehicle accessories can be used for up to 10 minutes after the engine is turned off:

- Audio System
- Power Windows

These features continue to work up to 10 minutes after the engine is turned off or until either door is opened. If a door is opened, the power windows and audio system will shut off.

Shifting Into Park

1. Hold the brake pedal down and set the parking brake. See *Electric Parking Brake on page 9-35*.
2. Move the shift lever into P (Park) by holding in the button on the lever and pushing the lever all the way toward the front of the vehicle.

3. Press the ENGINE START/ STOP button to turn the engine off.

Leaving the Vehicle with the Engine Running (Automatic Transmission)

⚠ Warning

It can be dangerous to leave the vehicle with the engine running. It could overheat and catch fire.

It is dangerous to get out of the vehicle if the shift lever is not fully in P (Park) with the parking brake firmly set. The vehicle can roll.

Do not leave the vehicle when the engine is running. If you have left the engine running, the vehicle can move suddenly. You or others could be injured. To be sure the vehicle will not move, even when you are on fairly level ground, always set the parking brake and

(Continued)

Warning (Continued)

move the shift lever to P (Park). See *Shifting Into Park on page 9-23*.

If you have to leave the vehicle with the engine running, be sure the vehicle is in P (Park) and the parking brake is firmly set before you leave it. After you have moved the shift lever into P (Park), hold down the regular brake pedal. See if you can move the shift lever away from P (Park) without first pushing the button on the lever. If you can, it means that the shift lever was not fully locked into P (Park).

Torque Lock (Automatic Transmission)

If you are parking on a hill and you do not shift the transmission into P (Park) properly, the weight of the vehicle may put too much force on the parking pawl in the transmission. You may find it difficult to pull the shift lever out of P (Park). This is called “torque lock.”
To prevent torque lock, set the parking brake and then shift into P (Park) properly before you leave the driver seat. To find out how, see “Shifting Into P (Park)” previously in this section.

When you are ready to drive, move the shift lever out of P (Park) before you release the parking brake.

If torque lock does occur, you may need to have another vehicle push yours a little uphill to take some of the pressure from the transmission parking pawl, so you can pull the shift lever out of P (Park).

Shifting out of Park

Shift lock release prevents shifting out of P (Park) unless the vehicle is running or in accessory mode and the brake pedal is applied.

The shift lock release is always functional except in the case of an uncharged or low voltage (less than 9-volt) battery. See *Jump Starting on page 10-79*.

To shift out of P (Park):

1. Apply the brake pedal.
2. Release the parking brake. See *Electric Parking Brake on page 9-35*.
3. Press the shift lever button.
4. Move the shift lever to the desired position.

If you still are unable to shift out of P (Park):

1. Fully release the shift lever button, and let go of the shift knob.
2. While holding down the brake pedal, press the shift lever button again.
3. Move the shift lever to the desired position.

If you still cannot move the shift lever from P (Park), consult your dealer or a professional towing service.

Parking (Manual Transmission)

Before exiting the vehicle, move the shift lever into 1 (First) or R (Reverse), and apply the parking brake. Once the shift lever has been placed into 1 (First) or R (Reverse) with the clutch pedal pressed in, turn the ignition off and release the clutch.

Parking over Things That Burn

⚠ Warning

Things that can burn could touch hot exhaust parts under the vehicle and ignite. Do not park over papers, leaves, dry grass, or other things that can burn.

Active Fuel Management®

This system allows the engine to operate on either all or half of its cylinders, depending on the driving conditions. With a manual transmission, the system is only active in Eco mode. With an automatic transmission, the system is available in all modes, but is more aggressive in Eco mode. See *Driver Mode Control on page 9-39*.

When less power is required, such as cruising at a constant vehicle speed, the system will operate in the half cylinder mode, allowing the vehicle to achieve better fuel economy. When greater power demands are required, such as accelerating from a stop, passing, or merging onto a freeway, the system will maintain full-cylinder operation.

Engine Exhaust

⚠ Warning

Engine exhaust contains carbon monoxide (CO) which cannot be seen or smelled. Exposure to CO can cause unconsciousness and even death.

Exhaust may enter the vehicle if:

- The vehicle idles in areas with poor ventilation (parking garages, tunnels, deep snow that may block underbody airflow or tail pipes).
- The exhaust smells or sounds strange or different.
- The exhaust system leaks due to corrosion or damage.
- The vehicle exhaust system has been modified, damaged, or improperly repaired.

(Continued)

Warning (Continued)

- There are holes or openings in the vehicle body from damage or aftermarket modifications that are not completely sealed.

If unusual fumes are detected or if it is suspected that exhaust is coming into the vehicle:

- Drive it only with the windows completely down.
- Have the vehicle repaired immediately.

Never park the vehicle with the engine running in an enclosed area such as a garage or a building that has no fresh air ventilation.

Running the Vehicle While Parked

It is better not to park with the engine running.

If the vehicle is left with the engine running, follow the proper steps to be sure the vehicle will not move. See *Shifting Into Park on page 9-23* and *Engine Exhaust on page 9-26*. If the vehicle has a manual transmission, see *Parking (Manual Transmission) on page 9-25*.

Automatic Transmission

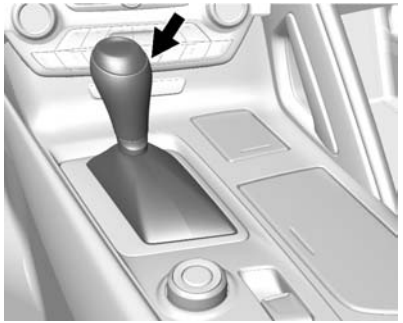

There are several different positions for the shift lever.

P (Park): This position locks the rear wheels. It is the best position to use when starting the engine because the vehicle cannot move easily.

⚠ Warning

It is dangerous to get out of the vehicle if the shift lever is not fully in P (Park) with the parking brake firmly set. The vehicle can roll.

Do not leave the vehicle when the engine is running. If you have left the engine running, the vehicle can move suddenly. You or others could be injured. To be sure the vehicle will not move, even when you are on fairly level ground, always set the parking brake and move the shift lever to P (Park). See *Shifting Into Park on page 9-23*.

Be sure the shift lever is fully in P (Park) before starting the engine.

The vehicle has an automatic transmission shift lock control system. Fully apply the brakes and then press the shift lever button before shifting from P (Park) when the vehicle is running. If the vehicle cannot be shifted out of P (Park), ease pressure on the shift lever and push the shift lever all the way into P (Park) as brake application is maintained. Then press the shift lever button and move the shift lever into another gear. See *Shifting out of Park on page 9-24*.

R (Reverse): Use this gear to back up.

⚠ Caution

Shifting to R (Reverse) while the vehicle is moving forward could damage the transmission. The repairs would not be covered by the vehicle warranty. Shift to R (Reverse) only after the vehicle is stopped.

To rock the vehicle back and forth to get out of snow, ice, or sand without damaging the transmission, see *If the Vehicle Is Stuck on page 9-13*.

N (Neutral): In this position, the engine does not connect with the wheels. To restart the engine when the vehicle is already moving, use N (Neutral) only. If the vehicle needs towing, see *Towing the Vehicle on page 10-82*.

⚠ Warning

Shifting into a drive gear while the engine is running at high speed is dangerous. Unless your foot is firmly on the brake pedal, the vehicle could move very rapidly. You could lose control and hit people or objects. Do not shift into a drive gear while the engine is running at high speed.

⚠ Caution

Shifting out of P (Park) or N (Neutral) with the engine running at high speed may

(Continued)

Caution (Continued)

damage the transmission. The repairs would not be covered by the vehicle warranty. Be sure the engine is not running at high speed when shifting the vehicle.

D (Drive): This position is for normal driving. It provides the best fuel economy. If more power is needed for passing, push the pedal down to achieve the desired level of acceleration.

Downshifting the transmission in slippery road conditions could result in skidding. See “Skidding” under *Loss of Control on page 9-4*.

The transmission can be shifted like a manual transmission using the paddle shift controls while in D (Drive). See *Manual Mode on page 9-28*.

M (Manual Mode): In M (Manual Mode), the transmission can be shifted like a manual transmission using the paddle shift controls. See *Manual Mode on page 9-28*.

Manual Mode

Manual Paddle Shift

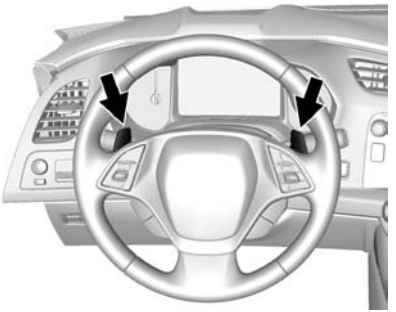

When the shift lever is moved to M (Manual Mode), the transmission enters Manual Mode. The transmission will hold the current gear until a change is requested. The paddles on the steering wheel can be used to manually upshift or

downshift the transmission. The right (+) plus paddle upshifts, and the left (−) minus paddle downshifts

When using the Manual Paddle Shift feature while in M (Manual Mode), the current gear will be displayed in the instrument cluster, or the Head-Up Display (HUD), if equipped. See *Head-Up Display (HUD) on page 5-29*.

When accelerating the vehicle from a stop in snowy and icy conditions, shifting to 2 (Second) or 3 (Third) gear allows the vehicle to gain more traction.

The Manual Paddle Shift system can be deactivated by moving the shift lever from M (Manual Mode) back to D (Drive).

When the shift lever is in D (Drive), press either the right (+) plus paddle or the left (−) minus paddle to place the transmission in Temporary Manual Paddle Shift mode. The gear indicator by the shift lever, in the cluster, and in the HUD will display an M, even though the shift lever is still in D (Drive). To exit the system, hold the (+) plus paddle for more than one second. The system will return to automatic shifting after six seconds of cruising at a steady speed, no manual shifts, no aggressive cornering, or when the vehicle comes to a stop.

While the Manual Paddle Shift gear selection system is active, the transmission will automatically downshift through the gears as the vehicle slows. The transmission will select 1 (First) gear as the vehicle stops. From a stop, the vehicle will start from and hold 1 (First) gear unless the manual paddle shifts are used to shift into a different gear, or D (Drive) is selected.

If the left (−) minus paddle is held down briefly, the transmission will downshift to the lowest gear possible for the vehicles speed. If the paddle continues to be held as the vehicle slows, downshifts will continue to occur as vehicle speed allows. This feature also works while in Temporary Manual Paddle Shift mode, but the driver must first press and release the (−) minus paddle to enter Temporary Manual Paddle Shift mode, then press and hold the (−) minus paddle briefly.

The Manual Paddle Shift system will not allow either an upshift or a downshift if the vehicle speed is too fast or too slow, nor will it allow a start from 4 (Fourth) or higher gear.

If upshifting does not occur when needed, vehicle speed will be limited to protect the engine.

When a requested shift is denied due to the speed restrictions shown, a DIC message will be displayed, and the current gear remains displayed in the cluster and HUD.

Manual Paddle Shift operation is available for use with cruise control. See *Cruise Control on page 9-48*.

The vehicle speeds required for Manual Paddle Shift upshifts depend on several vehicle inputs, which will vary the allowed up-shift speed by a few km/h (mph).

For vehicles with a 2.41:1 Axle Ratio (RPO GXB)

- Upshifts to 4 (Fourth) gear require approximately 37 km/h (23 mph).
- Upshifts to 5 (Fifth) gear require approximately 48 km/h (30 mph).
- Upshifts to 6 (Sixth) gear require approximately 60 km/h (37 mph).
- Upshifts to 7 (Seventh) gear require approximately 74 km/h (46 mph).
- Upshifts to 8 (Eighth) gear require approximately 95 km/h (59 mph).

To prevent damage to the powertrain, Manual Paddle downshifts to a lower gear cannot be done above certain speeds. The maximum speed allowed for downshifting of gears 1 (First) through 6 (Sixth) are:

- Into 6 (Sixth) gear over 309 km/h (192 mph).
- Into 5 (Fifth) gear over 243 km/h (151 mph).
- Into 4 (Fourth) gear over 183 km/h (114 mph).
- Into 3 (Third) gear over 149 km/h (93 mph).
- Into 2 (Second) gear over 100 km/h (62 mph).
- Into 1 (First) gear over 62 km/h (39 mph).

For vehicles with a 2.73:1 Axle Ratio (RPO GU2)

- Upshifts to 4 (Fourth) gear require approximately 34 km/h (21 mph).
- Upshifts to 5 (Fifth) gear require approximately 43 km/h (27 mph).
- Upshifts to 6 (Sixth) gear require approximately 55 km/h (34 mph).
- Upshifts to 7 (Seventh) gear require approximately 64 km/h (40 mph).
- Upshifts to 8 (Eighth) gear require approximately 82 km/h (51 mph).

To prevent damage to the powertrain, Manual Paddle downshifts to a lower gear cannot be done above certain speeds. The maximum speed allowed for downshifting of gears 1 (First) through 7 (Seventh) are:

- Into 7 (Seventh) gear over 321 km/h (199 mph).
- Into 6 (Sixth) gear over 272 km/h (169 mph).
- Into 5 (Fifth) gear over 214 km/h (133 mph).
- Into 4 (Fourth) gear over 161 km/h (100 mph).

- Into 3 (Third) gear over 131 km/h (93 mph).
- Into 2 (Second) gear over 88 km/h (62 mph).
- Into 1 (First) gear over 55 km/h (39 mph).

If an upshift is not requested as the engine speed approaches fuel shut off rpm, the engine speed will be limited to protect the engine. See *Tachometer on page 5-12*.

Manual Transmission

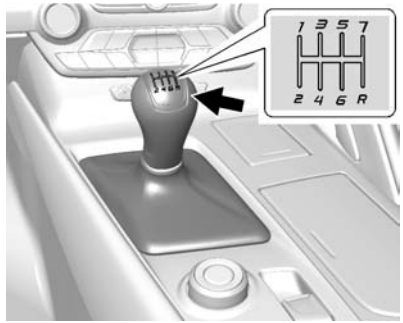

To operate:

1 (First): Press the clutch pedal and shift into 1 (First). Then slowly let up on the clutch pedal as the accelerator pedal is pressed.

This can be done if the vehicle is going less than 64 km/h (40 mph). If the vehicle is at a complete stop and it is hard to shift into 1 (First), put the shift lever in Neutral and let up on the clutch. Then press the clutch pedal back down and shift into 1 (First).

2 (Second): Press the clutch pedal while letting up on the accelerator pedal and shift into 2 (Second). Then, slowly let up on the clutch pedal as the accelerator pedal is pressed.

3 (Third), 4 (Fourth), 5 (Fifth), 6 (Sixth), and 7 (Seventh): Shift into 3 (Third), 4 (Fourth), 5 (Fifth), 6 (Sixth), and 7 (Seventh) the same way as for 2 (Second).

To stop, let up on the accelerator pedal and press the brake pedal. Just before the vehicle stops, press the clutch pedal and the brake pedal, and shift to Neutral.

Neutral: Use to start or idle the engine. Neutral is the center position of the shift pattern.

R (Reverse): To back up, push the clutch pedal and shift into R (Reverse). Additional pressure may be needed to move the lever past 5 (Fifth) and 6 (Sixth) into R (Reverse). Let up on the clutch pedal slowly while pressing the accelerator pedal.

The vehicle can be safely shifted into R (Reverse) while the vehicle is moving less than 5 km/h (3 mph). If the vehicle is going faster than that, R (Reverse) is locked out.

Shift Speeds

Use the following shift speeds, shown in km/h (mph), for the best fuel economy.

1 to 4	27 (17)
4 to 5	40 (25)
5 to 6	64 (40)
6 to 7	72 (45)

⚠ Caution

When shifting gears, do not move the shift lever around unnecessarily. This may damage the transmission. Shift directly into the next gear.

1–4 Shift Message

When the DIC displays this message, the vehicle can only be shifted from 1 (First) to 4 (Fourth).

See *Transmission Messages on page 5-44*.

Downshifting

Do not downshift into the gear at a speed greater than shown:

1 (First)	72 km/h (45 mph)
2 (Second)	107 km/h (67 mph)
3 (Third)	160 km/h (100 mph)
4 (Fourth)	233 km/h (145 mph)

⚠ Caution

When downshifting, if more than one gear is skipped, or the engine is racing when the clutch pedal is

(Continued)

Caution (Continued)

released, the engine, clutch, driveshaft or transmission could be damaged.

If the engine speed drops below 900 rpm, or if the engine is not running smoothly, downshift to the next lower gear. It may be necessary to downshift two or more gears.

The transmission has a spring that centers the shift lever near 3 (Third) and 4 (Fourth). This spring helps to know what gear the shift lever is in when shifting. Be careful when shifting from 1 (First) to 2 (Second) or downshifting from 7 (Seventh) to 6 (Sixth). The spring will try to pull the shift lever toward 4 (Fourth) and 3 (Third). Move the lever into 2 (Second) or 6 (Sixth) and do not let the shift lever move in the direction of the pulling, or it could shift from 1 (First) to 4 (Fourth) or from 7 (Seventh) to 4 (Fourth).

If the vehicle is not upshifted as the engine speed approaches fuel shut off rpm, the engine speed will be limited to protect the engine. See *Tachometer on page 5-12*.

Active Rev Match

Vehicles equipped with a manual transmission have Active Rev Match (ARM). ARM aids in smoother shifting by matching the engine speed to the next selected gear. By monitoring shift lever and clutch operation, ARM adjusts engine speed to match a calibrated value based on gear selection. On upshifts and downshifts, engine speed will be increased and decreased to match vehicle road speed and transmission gear position. ARM is maintained for a few seconds between shifts, then deactivates if the shift is not completed.

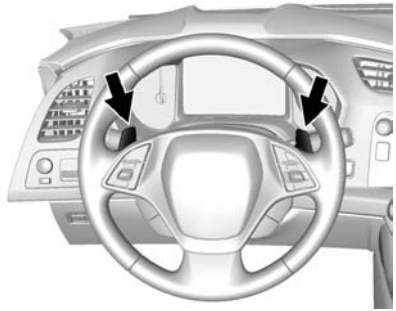

The system is activated and deactivated by pressing either of the paddles marked REV MATCH on the steering wheel. The system must be activated with each new ignition cycle.

A gear indicator in the instrument cluster displays the current gear selected:

- When ARM is activated, the gear number is amber.
- When ARM is deactivated, the gear number is white.
- A white dash indicates that service is required. ARM will be disabled, and the malfunction indicator lamp will be on. See *Malfunction Indicator Lamp on page 5-18*. The clutch and manual transmission will continue to operate normally.

ARM will also:

- Be active above 32 km/h (20 mph).
- Match engine speed up to 5400 rpm.
- Not operate when the accelerator pedal is applied.
- Be disabled when the coolant temperature is below 0°C (32°F).

Brakes

Antilock Brake System (ABS)

This vehicle has ABS, an advanced electronic braking system that helps prevent a braking skid.

When the vehicle begins to drive away, ABS checks itself.
A momentary motor or clicking noise might be heard while this test is going on, and it might even be noticed that the brake pedal moves a little. This is normal.

If there is a problem with ABS, this warning light stays on. See *Antilock Brake System (ABS) Warning Light on page 5-22*.

If driving safely on a wet road and it becomes necessary to slam on the brakes and continue braking to avoid a sudden obstacle, a computer senses the wheels are slowing down. If one of the wheels is about to stop rolling, the computer will separately work the brakes at each wheel.

ABS can change the brake pressure to each wheel, as required, faster than any driver could. This can help you steer around the obstacle while braking hard.

As the brakes are applied, the computer keeps receiving updates on wheel speed and controls braking pressure accordingly.

Remember: ABS does not change the time needed to get a foot up to the brake pedal or always decrease stopping distance. If you get too close to the vehicle in front of you, there will not be enough time to apply the brakes if that vehicle suddenly slows or stops. Always leave enough room up ahead to stop, even with ABS.

Using ABS

Do not pump the brakes. Just hold the brake pedal down firmly and let ABS work. You may hear the ABS pump or motor operating and feel the brake pedal pulsate. This is normal.

Braking in Emergencies

ABS allows you to steer and brake at the same time. In many emergencies, steering can help more than even the very best braking.

Electric Parking Brake

The vehicle has an Electric Parking Brake (EPB). The switch is on the center console. The EPB can always be activated, even if the ignition is off. To prevent draining the battery, avoid repeated cycles of the EPB when the engine is not running.

The system has a red parking brake status light and an amber parking brake warning light. See *Electric Parking Brake Light on page 5-21* and *Service Electric Parking Brake Light on page 5-21*. There are also parking brake-related Driver Information Center (DIC) messages. See *Brake System Messages on page 5-34*. In case of insufficient electrical power, the EPB cannot be applied or released.

Before leaving the vehicle, check the red parking brake status light to ensure that the parking brake is applied.

EPB Apply

To apply the EPB:

1. Be sure the vehicle is at a complete stop.
2. Lift up the EPB switch momentarily.

The red parking brake status light will flash and then stay on once the EPB is fully applied. If the red parking brake status light flashes continuously, then the EPB is only partially applied or there is a problem with the EPB. A DIC message will display. Release the EPB and try to apply it again. If the light does not come on, or keeps flashing, have the vehicle serviced. Do not drive the vehicle if the red parking brake status light is flashing. See your dealer. See *Electric Parking Brake Light on page 5-21*.

If the amber parking brake warning light is on, lift up on the EPB switch and hold it up. Continue to hold the switch until the red parking brake status light remains on. If the amber parking brake warning light remains on, see your dealer.

If the EPB is applied while the vehicle is moving, the vehicle will decelerate as long as the switch is held up. If the switch is held up until the vehicle comes to a stop, the EPB will remain applied.

The vehicle may automatically apply the EPB in some situations when the vehicle is not moving. This is

normal, and is done to periodically check the correct operation of the EPB system.

If the EPB fails to apply, the rear wheels should be blocked to prevent vehicle movement.

EPB Release

To release the EPB:

1. Place the ignition in the ACC/ ACCESSORY or ON/RUN position.
2. Apply and hold the brake pedal.
3. Push down momentarily on the EPB switch.

The EPB is released when the red parking brake status light is off.

If the amber parking brake warning light is on, release the EPB by pushing down on the EPB switch and holding it down. Continue to hold the switch until the red parking brake status light is off. If either light stays on after release is attempted, see your dealer.

⚠ Caution

Driving with the parking brake on can overheat the brake system and cause premature wear or damage to brake system parts. Make sure that the parking brake is fully released and the brake warning light is off before driving.

Automatic EPB Release

The EPB will automatically release if the vehicle is running, placed into gear, and an attempt is made to drive away. Avoid rapid acceleration when the EPB is applied, to preserve parking brake lining life.

The EPB can also be used to prevent roll back for vehicles with a manual transmission taking off on a hill. When no roll back is desired, an applied EPB will allow both feet to be used for the clutch and accelerator pedals in preparation for starting the vehicle moving in the intended direction. In this case, there is no need to push the switch to release the EPB.

Brake Assist

The Brake Assist feature is designed to assist the driver in stopping or decreasing vehicle speed in emergency driving conditions. This feature uses the stability system hydraulic brake control module to supplement the power brake system under conditions where the driver has quickly and forcefully applied the brake pedal in an attempt to quickly stop or slow down the vehicle. The stability system hydraulic brake control module increases brake pressure at each corner of the vehicle until the ABS activates. Minor brake pedal pulsation or pedal movement during this time is normal and the driver should continue to apply the brake pedal as the driving situation dictates. The Brake Assist feature will automatically disengage when the

brake pedal is released or brake pedal pressure is quickly decreased.

Hill Start Assist (HSA)

If equipped, HSA may automatically activate when the vehicle is stopped on a grade. This feature is designed to prevent the vehicle from rolling, either forward or rearward, during vehicle drive off. During the transition from releasing the brake pedal to accelerating to drive off on a grade, HSA holds the braking pressure to prevent rolling. HSA will not activate if the vehicle is in a drive gear and facing downhill or if the vehicle is facing uphill and in R (Reverse).

Ride Control Systems

Traction Control/ Electronic Stability Control

The vehicle has a Traction Control System (TCS) and a StabiliTrak system. These systems help limit wheel spin and assist the driver in maintaining control, especially on slippery road conditions.

TCS activates if it senses that the rear wheels are spinning too much or are beginning to lose traction. When this happens, TCS applies the brakes to the spinning wheel and reduces engine power (by closing the throttle and managing engine spark) to limit wheel spin.

StabiliTrak activates when the vehicle senses a difference between the intended path and the direction the vehicle is actually traveling. StabiliTrak selectively applies braking pressure to any one of the vehicle wheel brakes to assist the driver in keeping the vehicle on the intended path.

If cruise control is being used when TCS begins to limit wheel spin, the cruise control will automatically disengage. Cruise control may be reengaged when road conditions allow. See *Cruise Control on page 9-48*.

Both systems come on automatically when the vehicle is started and begins to move. The systems may be heard or felt while they are operating or while performing diagnostic checks. This is normal and does not mean there is a problem with the vehicle.

It is recommended to leave both systems on for normal driving conditions, but it may be necessary to turn TCS off if the vehicle gets stuck in sand, mud, ice, or snow. See *If the Vehicle Is Stuck on page 9-13* and “Turning the Systems Off and On” later in this section.

The indicator light for both systems is in the instrument cluster. This light will:

- Flash when TCS is limiting wheel spin.
- Flash when StabiliTrak is activated.
- Turn on and stay on when either system is not working.

If either system fails to turn on or to activate, a message displays in the Driver Information Center (DIC), and comes on and stays on to indicate that the system is inactive and is not assisting the driver in maintaining control. The vehicle is safe to drive, but driving should be adjusted accordingly.

If comes on and stays on:

1. Stop the vehicle.
2. Turn the engine off and wait 15 seconds.
3. Start the engine.

Drive the vehicle. If comes on and stays on, the vehicle may need more time to diagnose the problem. If the condition persists, see your dealer.

Turning the Systems Off and On

The TCS/StabiliTrak button is on the center console.

⚠ Caution

Do not repeatedly brake or accelerate heavily when TCS is off. The vehicle driveline could be damaged.

To turn off only TCS, press and release the button. The Traction Off Light illuminates in the instrument cluster. To turn TCS on again, press and release the button. The Traction Off Light displayed in the instrument cluster will turn off.

If TCS is limiting wheel spin when the button is pressed, the system will not turn off until the wheels stop spinning.

To turn off both TCS and StabiliTrak, press and hold the button until the Traction Off Light and

StabiliTrak OFF light illuminate and stay on in the instrument cluster.

To turn TCS and StabiliTrak on again, press and release the button. The Traction Off Light and StabiliTrak OFF light in the instrument cluster turn off.

If the Tire Pressure Monitor (TPM) system is malfunctioning and the DIC displays SERVICE TIRE MONITOR SYSTEM, StabiliTrak will be affected as follows:

- StabiliTrak cannot be turned off by the driver.
- If StabiliTrak is off, it will be turned on automatically.
- Competitive Driving Mode or Performance Traction Management is unavailable.
- StabiliTrak will feel different in aiding and maintaining directional control.

Adding accessories can affect the vehicle performance. See *Accessories and Modifications on page 10-2*.

Driver Mode Control

The Driver Mode Selector knob is on the console behind the shift lever.

There are five modes for different driving conditions: Weather, Eco, Tour, Sport, and Track.

The outer ring turns to change the modes, which display in the instrument cluster.

Press the button in the center of the knob for Stability Control and Traction Control, or if the vehicle is in Track mode with Performance Traction Management (PTM). See *Traction Control/Electronic Stability Control on page 9-37* or the information on PTM in *Competitive Driving Mode on page 9-43*.

When PTM is active, the outer ring will change the PTM mode and the Driver mode will display in the instrument cluster.

Each mode is configured for use in different driving conditions. Use:

- Weather mode for rain and snow.
- Eco mode to improve fuel economy.
- Tour mode for comfortable normal driving.
- Sport mode for spirited on road driving.
- Track mode for track use.

There are 12 attributes that vary by mode shown below. Not all vehicles have all features, depending on the vehicle options.

Modes:	WEATHER	ECO	TOUR *Default*	SPORT	TRACK
Cluster Display	Tour	Tour	Tour	Sport	Track
Throttle Progression	Weather	Normal	Normal	Sport	Sport
Trans Shift Mode (if equipped)	Normal	Normal	Normal	Sport	Track
Active Fuel Management	Normal	Eco	Normal	Normal	Normal
Exhaust Mode	Eco	Eco	Tour	Sport	Track
Steering	Comfort	Comfort	Comfort	Sport	Track
StabiliTrak	Normal	Normal	Normal	Normal	Comp Mode Avail
Electronic Limited Slip (if equipped)	Mode 1	Mode 1	Mode 1	Modes 2 & 3	Modes 2 & 3
Magnetic Ride (if equipped)	Tour	Tour	Tour	Sport	Track
Launch Control	NA	NA	NA	NA	Available
Traction Control	Weather	Normal	Normal	Normal	Track
Performance Traction or Competitive Driving Mode (if equipped)	Off	Off	Off	Off	Available

Driver Mode Selector Attributes Affected

The Gauge Cluster Display is configured for each mode when linked (default):

- Tour: Modern theme which features displays for audio and navigation.
- Sport: Classic easy to read Sports Car gauges.
- Track: Gauges design based on Corvette Racing display with lap timer.

Throttle Progression

Adjusts throttle sensitivity by selecting how quick or slow the throttle reacts to input.

Transmission Shift Mode − Paddle Shift Automatic

- Adjusts to either a smoother or firmer shift.
- Sport – Performance Algorithm Liftfoot (PAL) recognizes aggressive throttle maneuvers and holds lower gears for greater engine braking and enhanced vehicle control when not using paddles. (Available in Sport or Track mode.)
- Track – Performance Algorithm Shift (PAS) recognizes aggressive cornering, heavy braking, and high acceleration to select and hold lower gears when not using paddles.

Active Fuel Management (engine cylinder shuts off)
4-Cylinder Mode

- Normal with automatic transmission: The engine uses 8-cylinder mode when accelerating, but changes to 4-cylinder mode when coasting.
- With manual transmission: Active Fuel Management only active in Eco mode.
- Off in Manual mode with automatic transmission unless in Eco mode.
- Eco keeps the engine in 4-cylinder mode unless heavy acceleration is needed.

Exhaust (variable mode exhaust system)

Changes when the variable exhaust valves open.

Steering (Assist Effort)

Adjusts from a lighter steering feel to reduced assist for more steering feel.

Magnetic Ride Control (if equipped)

Adjusts the shock dampening firmness based on driving conditions to improve comfort and performance.

Launch Control

Available only in Track mode for maximum “off–the–line” acceleration when in Competitive or PTM modes.

Stability Control

- Competitive Driving Mode allows less computer control to permit some slide and drift and is selected with the OFF button – only available in Track mode.
- StabiliTrak can be turned off by pressing and holding the OFF button for 10 seconds.

PTM (Performance Traction Management) (if equipped)

- Available in Track mode.
- There are five selectable settings if Competitive Driving Mode is activated.

Competitive Driving Mode

If equipped, Competitive Driving Mode, Performance Traction Management, and Launch Control are systems designed to allow increased performance while accelerating and/or cornering. This is accomplished by regulating and optimizing the engine, brakes, and suspension performance. These modes are for use at a closed course race track and are not intended for use on public roads. They will not compensate for driver inexperience or lack of familiarity with the race track. Drivers who prefer to allow the system to have more control of the engine, brake, and suspension are advised to turn the normal traction control and StabiliTrak systems on.

⚠ Caution

Attempting to shift when the drive wheels are spinning and do not have traction may cause damage to the transmission. Damage caused by misuse of the vehicle is not covered by the vehicle warranty. Do not attempt to shift when the drive wheels do not have traction.

Competitive Driving Mode (Except Z51 and Z06 with Magnetic Ride Control)

Competitive Driving Mode allows full engine power while StabiliTrak helps maintain directional control of the vehicle by selective brake application. In this mode, TCS is off and Launch Control is available. Adjust your driving style to account for the available engine power. See “Launch Control” later in this section.

These lights are on when the vehicle is in the Competitive Driving Mode.

In order to select this optional handling mode, the vehicle mode must be Track. Then quickly press the TCS/StabiliTrak OFF button on the center console two times. COMPETITIVE DRIVING MODE displays in the Driver Information Center (DIC). See *Ride Control System Messages on page 5-39*.

When the OFF button is pressed again, the traction off light and StabiliTrak OFF light OFF will go out.

Performance Traction Management (Z51 and Z06 with Magnetic Ride Control)

Performance Traction Management (PTM) integrates the Traction Control, StabiliTrak, and Magnetic Ride Control systems to provide improved and consistent performance when cornering. The amount of available engine power is based on the mode selected, track conditions, driver skill, and the radius of each corner.

This light is on when the vehicle is in the PTM mode.

To select this optional handling mode, the vehicle mode must be Track. Then quickly press the TCS/StabiliTrak OFF button on the center console two times. PERF TRAC 1 - WET ACTIVE HANDLING ON displays in the DIC.

To experience the performance benefit of this system, after entering a curve and at the point where normal acceleration occurs, fully push the accelerator pedal. The PTM system will modify the level of engine power for a smooth and consistent corner exit.

The PTM system contains five modes. These modes are selected by turning the Selective Ride Control/Performance Traction Management MODE SELECT knob on the center console. Scroll up or down through modes 1–5 by turning the MODE SELECT knob to the right or left.

The following is a DIC display description and the recommended usage of each mode:

PERF TRAC 1 – WET ACTIVE HANDLING ON

- Intended for all driver skill levels.
- Wet or damp conditions only — not intended for use in heavy rain or standing water.
- StabiliTrak is on and engine power is reduced based on conditions.

PERF TRAC 2 – DRY ACTIVE HANDLING ON

- For use by less experienced drivers or while learning a new track.
- Dry conditions only.
- StabiliTrak is on and engine power is slightly reduced.

PERF TRAC 3 – SPORT ACTIVE HANDLING ON

- For use by drivers who are familiar with the track.
- Dry conditions only.
- Requires more driving skill than mode 2.
- StabiliTrak is on and more engine power is available than in mode 2.

PERF TRAC 4 – SPORT ACTIVE HANDLING OFF

- For use by drivers who are familiar with the track.
- Dry conditions only.
- Requires more driving skill than modes 2 or 3.
- StabiliTrak is off and available engine power is the same as mode 3.

PERF TRAC 5 – RACE ACTIVE HANDLING OFF

- For use by experienced drivers who are familiar with the track.
- Dry conditions only.
- Requires more driving skill than in other modes.
- StabiliTrak is off and engine power is available for maximum cornering speed.

Press and release the TCS/ StabiliTrak OFF button to turn off PTM and return to the traction control and StabiliTrak systems. The traction off light and StabiliTrak OFF light will go out.

Launch Control (Track Mode Only)

A Launch Control feature is available, within Competitive Driving Mode (except Z51 and Z06 with Magnetic Ride Control) or Performance Traction Management (Z51 and Z06 with Magnetic Ride Control), on all vehicles to allow the driver to achieve high levels of vehicle acceleration in a straight line. Launch Control is a form of traction control that manages tire spin while launching the vehicle. This feature is intended for use during closed course race events where consistent zero to 60 and quarter mile times are desirable.

Launch Control is only available when the following criteria are met:

- Competitive Driving Mode is selected (except Z51 and Z06 with Magnetic Ride Control) or any of the Performance Traction Management modes are selected (Z51 and Z06 with Magnetic Ride Control). The TCS light comes on the instrument panel and the appropriate DIC message displays.
- The vehicle is not moving.
- The steering wheel is pointing straight.

Manual Transmissions

- The clutch is pressed and the vehicle is in 1 (First) gear.
- The accelerator pedal is rapidly applied to wide open throttle.

The Launch Control feature will initially limit engine speed as the driver rapidly applies the accelerator pedal to wide open throttle. Allow the engine rpm to stabilize.
A smooth, quick release of the clutch, while maintaining the fully pressed accelerator pedal, will manage wheel slip. Complete shifts as described in *Manual Transmission on page 9-31*.

Automatic Transmissions

- The brake pedal must be firmly pressed to the floor, equivalent to a panic brake event.
- The accelerator pedal is rapidly applied to wide open throttle. (If the vehicle rolls due to wide open throttle, release the throttle, press the brake pedal

more firmly, and re-apply the accelerator to wide open throttle.)

The Launch Control feature will initially limit engine speed as the driver rapidly applies the accelerator pedal to wide open throttle. Allow the engine rpm to stabilize.
A smooth, quick release of the brake pedal, while maintaining the fully pressed accelerator pedal, will manage wheel slip.

After the vehicle is launched, the system continues in Competitive Driving Mode (except Z51 and Z06 with Magnetic Ride Control) or Performance Traction Management (Z51 and Z06 with Magnetic Ride Control).

Competitive Driving Mode, PTM, and Launch Control are systems designed for a closed course race track and not intended for use on public roads. The systems are not intended to compensate for lack of driver experience or familiarity with the race track.

Limited-Slip Differential (Except Z51 and Z06)

If equipped, the mechanical limited-slip differential can give more traction on snow, mud, ice, sand, or gravel. It works like a standard axle most of the time, but when traction is low, this feature allows the drive wheel with the most traction to move the vehicle. For vehicles with limited slip differential, driven under severe conditions, the rear axle fluid should be changed. See *Competitive Driving Mode on page 9-43* and *Maintenance Schedule on page 11-2*.

Limited-Slip Differential (Z51 and Z06 Only)

If equipped, the Electronic Limited Slip Differential (ELSD) is automatically activated. ELSD actively monitors vehicle sensors and driver inputs to determine the amount of change for the conditions. With ELSD, the vehicle has:

- Enhanced high-speed control.
- Improved traction through corners, allowing more acceleration.
- More precise steering.
- Increased vehicle agility.
- Integration with StabiliTrak.

For vehicles with limited slip differential, driven under severe conditions, the rear axle fluid should be changed. See *Competitive Driving Mode on page 9-43* and *Maintenance Schedule on page 11-2*.

Cruise Control

With cruise control, a speed of about 40 km/h (25 mph) or more can be maintained without keeping your foot on the accelerator. Cruise control does not work at speeds below about 40 km/h (25 mph).

⚠ Warning

Cruise control can be dangerous where you cannot drive safely at a steady speed. Do not use cruise control on winding roads or in heavy traffic.

Cruise control can be dangerous on slippery roads. On such roads, fast changes in tire traction can cause excessive wheel slip, and you could lose control. Do not use cruise control on slippery roads.

If equipped with a manual transmission, the cruise control will remain active when the gears are shifted. The cruise is disengaged if the clutch is pressed for several seconds.

If the Traction Control System (TCS) begins to limit wheel spin while you are using cruise control, the cruise control automatically disengages. See *Traction Control/Electronic Stability Control on page 9-37*. When road conditions allow for using safely again, cruise control can be turned back on.

If the brakes are applied, cruise control disengages.

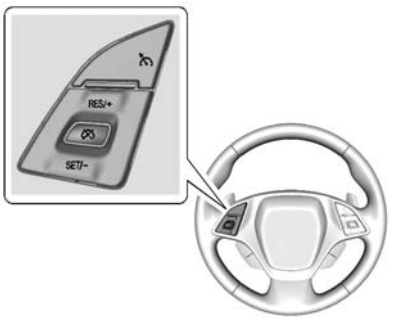

(On/Off): Press to turn cruise control on or off. A white indicator comes on in the instrument cluster when cruise is turned on.

RES/+ (Resume/Accelerate): If there is a set speed in memory, press briefly to resume to that speed or press and hold to accelerate. If cruise control is already active, use to increase vehicle speed.

SET/– (Set/Coast): Press briefly to set the speed and activate cruise control. If cruise control is already active, use to decrease vehicle speed.

(Cancel): Press to disengage cruise control without erasing the set speed from memory.

Setting Cruise Control

If the button is on when not in use, SET/– or RES/+ could get pressed and go into cruise when not desired. Keep the button off when cruise is not being used.

1. Press the button to turn the cruise system on.
2. Get up to the desired speed.
3. Press and release the SET/– .
4. Remove foot from the accelerator.

The cruise control indicator on the instrument cluster turns green after cruise control has been set to the desired speed. See *Instrument Cluster on page 5-7*.

Resuming a Set Speed

If the cruise control is set at a desired speed and then the brakes are applied or is pressed, the cruise control is disengaged without erasing the set speed from memory.

Once the vehicle reaches about 40 km/h (25 mph) or more, briefly press the RES/+ button. The vehicle returns to the previous set speed.

Increasing Speed While Using Cruise Control

If the cruise control system is already activated,

- Press and hold RES/+ until the desired speed is reached, then release it.
- To increase vehicle speed in small increments, briefly press RES/+. For each press, the vehicle goes about 1.6 km/h (1 mph) faster.

The speedometer reading can be displayed in either English or metric units. See *Instrument Cluster on page 5-7*. The increment value used depends on the unites displayed.

Reducing Speed While Using Cruise Control

If the cruise control system is already activated:

- Press and hold SET/– until the desired lower speed is reached, then release it.
- To decrease the vehicle speed in small increments, briefly press SET/–. For each press, the vehicle goes about 1.6 km/h (1 mph) slower.

The speedometer reading can be displayed in either English or metric units. See *Instrument Cluster on page 5-7*. The increment value used depends on the unites displayed.

Passing Another Vehicle While Using Cruise Control

Use the accelerator pedal to increase the vehicle speed. When you take your foot off the pedal, the vehicle will slow down to the previously set cruise speed.

While pressing the accelerator pedal or shortly following the release to override cruise control, briefly pressing SET/– will result in cruise set to the current vehicle speed.

Using Cruise Control on Hills

How well the cruise control works on hills depends upon the vehicle speed, load, and the steepness of the hills. When going up steep hills, you might have to step on the accelerator pedal to maintain your speed. When going downhill, you might have to brake or shift to a lower gear to keep your speed down. If the brake pedal is applied, cruise control will disengage.

Cruise Control in Manual Paddle Shift Gear Selection

When the vehicle is in M (Manual Mode) and the manual paddle shift controls are not being used, cruise control operates in the same manner as D (Drive).

When the vehicle is in M (Manual Mode) and the manual paddle shift controls are being used, cruise control operates as follows:

- If cruise control is active and a gear is selected with the manual paddle shift controls, the vehicle speed is maintained in the driver selected gear and will not automatically upshift or downshift the transmission while the driver's gear selection is active.
- If driving in hilly terrain, cruise control may not be able to maintain vehicle speed if an upshift or downshift is not selected by the driver. While driving on hilly terrain and cruise control is active with a manual paddle shift gear selection, the driver must select the proper gear for the terrain or select D (Drive) on the gear range selector for full automatic transmission operation.

Ending Cruise Control

- Step lightly on the brake pedal.
- If equipped with a manual transmission, press the clutch pedal for several seconds or shift to Neutral to disengage cruise control.
- Press .
- To turn off cruise control, press .

Erasing Speed Memory

The cruise control set speed is erased from memory if is pressed or if the ignition is turned off.

Driver Assistance Systems

Rear Vision Camera (RVC)

The RVC system can assist the driver when backing up by displaying a view of the area behind the vehicle.

⚠ Warning

The RVC system does not display children, pedestrians, bicyclists, crossing traffic, animals, or any other object located outside the camera's field of view, below the bumper, or under the vehicle. Perceived distances may be different from actual distances. Do not back the vehicle using only the RVC screen. Failure to use proper care before backing may result in injury, death,

(Continued)

Warning (Continued)

or vehicle damage. Always check behind and around the vehicle before backing.

An image appears on the infotainment screen when the vehicle is shifted into R (Reverse). The infotainment screen goes to the previous screen after approximately 10 seconds once the vehicle is shifted out of R (Reverse).

To return to the previous screen sooner, do one of the following:

- Press a hard key on the infotainment system.
- Shift into P (Park), for an automatic transmission.
- Reach a vehicle speed of 8 km/h (5 mph).

Guidance Lines

The RVC system may have a guidance line overlay that can help the driver align the vehicle when backing into a parking spot.

To turn the guidance lines on or off:

1. On the infotainment system, press the Settings screen button, or turn the MENU knob to highlight Settings and press MENU.
2. Select Rear Camera.
3. Select Guidance Lines and then select Off or On.

Rear Vision Camera Error Messages

SERVICE REAR VISION CAMERA SYSTEM: This message can display when the system is not operating properly.

If any other problem occurs or if a problem persists, see your dealer.

Rear Vision Camera Location

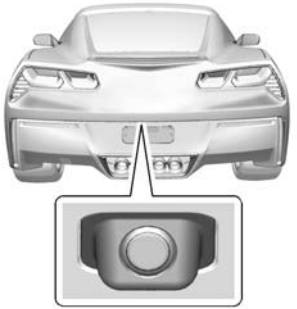

The camera is above the license plate.

The area displayed by the camera is limited. It does not display objects that are close to either corner or under the bumper and can vary depending on vehicle orientation or road conditions. Displayed images may be closer or farther than they appear.

The following illustrations show the field of view that the camera provides.

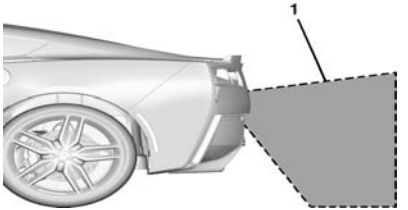

1. View displayed by the camera.

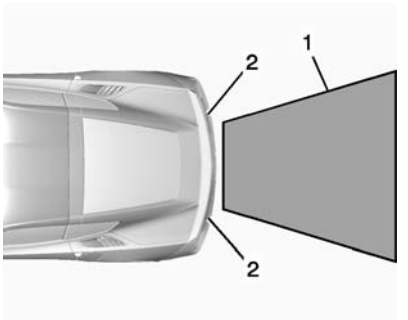

1. View displayed by the camera.
2. Corner of the rear bumper.

When the System Does Not Seem to Work Properly

The RVC system may not work properly or display a clear image if:

- It is dark.
- The sun or the beam of headlamps are shining directly into the camera lens.
- Ice, snow, mud, or anything else builds up on the camera lens. Clean the lens, rinse it with water, and wipe it with a soft cloth.
- The back of the vehicle is in an accident. The position and mounting angle of the camera can change or the camera can be affected. Be sure to have the camera and its position and mounting angle checked at your dealer.

Fuel

Use of the recommended fuel is an important part of the proper maintenance of this vehicle. When driving in the U.S. and Canada, to help keep the engine clean and maintain optimum vehicle performance, we recommend TOP TIER Detergent Gasolines. See www.toptiergas.com for a list of TOP TIER Detergent Gasolines.

TOP TIER™ Detergent Gasoline

CATÉGORIE SUPERIÉURE™ Essences Détergentes

If equipped with the LT1 engine, use premium unleaded gasoline meeting ASTM specification D4814 with a posted octane rating of 91 or higher. Regular unleaded gasoline rated at 87 octane or higher can be used, but acceleration and fuel economy will be reduced, and an audible knocking noise may be heard. If this occurs, use a gasoline rated at 91 octane or higher as soon as possible. Otherwise, the engine could be damaged. If heavy knocking is heard when using gasoline with a 91 octane rating or higher, the engine needs service.

If equipped with the LT4 supercharged engine, use premium unleaded gasoline meeting ASTM specification D4814 with a posted octane rating of 91 or higher. If the octane is less than 91, damage to the engine may occur and may void the vehicle warranty. If heavy knocking is heard when using gasoline rated at 91 octane or higher, the engine needs service.

Use of Seasonal Fuels

Use summer and winter fuels in the appropriate season. The fuels industry automatically modifies the fuel for the appropriate season. If fuel is left in the vehicle tank for long periods of time, driving or starting could be affected. Drive the vehicle until the fuel is at one-half tank or less, then refuel with the current seasonal fuel.

Prohibited Fuels

Gasolines containing oxygenates such as ethers and ethanol, as well as reformulated gasolines, are available in some cities. If these gasolines comply with the previously described specification, then they are acceptable to use. However, E85 (85% ethanol) and other fuels containing more than 15% ethanol must be used only in FlexFuel vehicles.

⚠ Caution

Do not use fuel containing methanol. It can corrode metal parts in the fuel system and also damage plastic and rubber parts. That damage would not be covered under the vehicle warranty.

Some gasolines, mainly high octane racing gasolines, can contain an octane-enhancing additive called methylcyclopentadienyl manganese tricarbonyl (MMT). Do not use gasolines and/or fuel additives with MMT as they can reduce spark plug life and affect emission control system performance. The malfunction indicator lamp may turn on. If this occurs, see your dealer for service.

California Fuel Requirements

If the vehicle is certified to meet California Emissions Standards, it is designed to operate on fuels that meet California specifications. See the underhood emission control label. If this fuel is not available in states adopting California Emissions Standards, the vehicle will operate satisfactorily on fuels meeting federal specifications, but emission control system performance might be affected. The malfunction indicator lamp could turn on and the vehicle may not pass a smog-check test. See *Malfunction Indicator Lamp on page 5-18*. If this occurs, return to your authorized dealer for diagnosis. If it is determined that the condition is caused by the type of fuel used, repairs may not be covered by the vehicle warranty.

Fuels in Foreign Countries

If planning to drive in countries outside the U.S. or Canada, the proper fuel might be hard to find. Check regional auto club or fuel retail brand websites for availability in the country where driving. Never use leaded gasoline, fuel containing methanol, manganese, or any other fuel not recommended. Costly repairs caused by use of improper fuel would not be covered by the vehicle warranty.

Fuel Additives

To keep fuel systems clean, TOP TIER Detergent Gasoline is recommended. See *Fuel on page 9-53*.

If TOP TIER Detergent Gasoline is not available, one bottle of Fuel System Treatment PLUS added to the fuel tank at every engine oil change, can help. Fuel System Treatment PLUS is the only

gasoline additive recommended by General Motors. It is available at your dealer.

Filling the Tank

⚠ Warning

Fuel vapors and fuel fires burn violently and can cause injury or death.

- To help avoid injuries to you and others, read and follow all the instructions on the fuel pump island.
- Turn off the engine when refueling.
- Keep sparks, flames, and smoking materials away from fuel.
- Do not leave the fuel pump unattended.
- Do not reenter the vehicle while pumping fuel.

(Continued)

Warning (Continued)

- Keep children away from the fuel pump and never let children pump fuel.
- Fuel can spray out if the refueling nozzle is inserted too quickly. This spray can happen if the tank is nearly full, and is more likely in hot weather. Insert the refueling nozzle slowly and wait for any hiss noise to stop prior to beginning to flow fuel

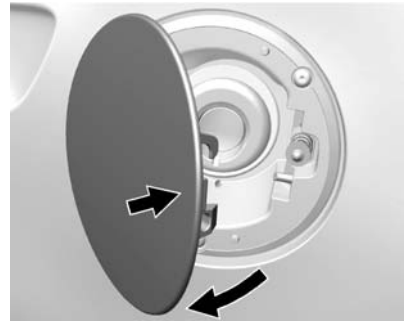

To open the fuel door, push and release the rearward center edge of the door. The fuel door is locked when the vehicle doors are locked. Press 🔓 on the RKE transmitter to unlock. With passive locking, the driver door must be opened first before the fuel door will unlock.

The vehicle has a capless refueling system and does not have a fuel cap. The filling nozzle must be fully inserted and latched prior to starting fuel flow.

Be careful not to spill fuel. Do not top off or overfill the tank and wait a few seconds before removing the nozzle. After initial shutoff, do not partially remove the nozzle to add more fuel as this will result in fuel spillage. Clean fuel from painted surfaces as soon as possible. See *Exterior Care on page 10-82*.

⚠ Warning

If a fire starts while you are refueling, do not remove the nozzle. Shut off the flow of fuel by shutting off the pump or by notifying the station attendant. Leave the area immediately.

Filling the Tank With a Portable Gas Can

If the vehicle runs out of fuel and must be filled from a portable gas can:

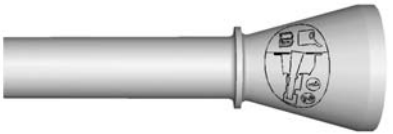

1. Locate the capless funnel adapter from inside the vehicle.
2. Insert and latch the funnel into the capless fuel system.

⚠ Warning

Attempting to refuel without using the funnel adapter may cause fuel spillage and damage the capless fuel system. This could cause a fire and you or others could be badly burned and the vehicle could be damaged.

3. Remove and clean the funnel adapter and return it to the storage location.

Filling a Portable Fuel Container

⚠ Warning

Filling a portable fuel container while it is in the vehicle can cause fuel vapors that can ignite either by static electricity or other means. You or others could be badly burned and the vehicle could be damaged. Always:

- Use approved fuel containers.
- Remove the container from the vehicle, trunk, or pickup bed before filling.
- Place the container on the ground.

(Continued)

Warning (Continued)

- Place the nozzle inside the fill opening of the container before dispensing fuel, and keep it in contact with the fill opening until filling is complete.
- Fill the container no more than 95% full to allow for expansion.
- Do not smoke, light matches, or use lighters while pumping fuel.
- Avoid using cell phones or other electronic devices.

Trailer Towing

General Towing Information

The vehicle is neither designed nor intended to tow a trailer.

Conversions and Add-Ons

Add-On Electrical Equipment

⚠ Caution

Some electrical equipment can damage the vehicle or cause components to not work and would not be covered by the warranty. Always check with your dealer before adding electrical equipment.

Add-on equipment can drain the vehicle's 12-volt battery, even if the vehicle is not operating.

The vehicle has an airbag system. Before attempting to add anything electrical to the vehicle, see *Servicing the Airbag-Equipped Vehicle on page 3-24* and *Adding Equipment to the Airbag-Equipped Vehicle on page 3-25*.

✍ NOTES

Vehicle Care

General Information

General Information 10-2
California Proposition 65 Warning 10-2
California Perchlorate Materials Requirements 10-2
Accessories and Modifications 10-2
Lifting the Vehicle 10-3

Vehicle Checks

Doing Your Own Service Work 10-5
Hood 10-6
Engine Compartment Overview 10-7
Engine Oil 10-12
Engine Oil Life System 10-18
Automatic Transmission Fluid 10-19
Manual Transmission Fluid 10-19
Hydraulic Clutch 10-19
Engine Air Cleaner/Filter 10-20
Cooling System (Engine) ... 10-22
Cooling System (Aero Panel) 10-23
Engine Coolant 10-24
Engine Overheating 10-27
Washer Fluid 10-28
Brakes 10-29
Brake Fluid 10-32
Battery 10-33
Rear Axle 10-34
Starter Switch Check 10-35
Automatic Transmission Shift Lock Control Function Check 10-35
Park Brake and P (Park) Mechanism Check 10-36
Wiper Blade Replacement 10-36
Windshield Replacement ... 10-37

Headlamp Aiming

Headlamp Aiming 10-37

Bulb Replacement

Bulb Replacement 10-37
High Intensity Discharge (HID) Lighting 10-37
LED Lighting 10-38
License Plate Lamp 10-38
Replacement Bulbs 10-38

Electrical System

Electrical System Overload 10-39
Fuses 10-39
Engine Compartment Fuse Block 10-39
Rear Compartment Fuse Block 10-43

Wheels and Tires

Tires 10-46
Winter Tires 10-47
Run-Flat Tires 10-48
Low-Profile Tires 10-49
Competition Oriented Tires 10-49
Summer Tires 10-50
Tire Sidewall Labeling 10-51
Tire Designations 10-52
Tire Terminology and Definitions 10-53
Tire Pressure 10-55
Tire Pressure for High-Speed Operation 10-57
Tire Pressure Monitor System 10-57
Tire Pressure Monitor Operation 10-58
Tire Inspection 10-61

Tire Rotation 10-61
When It Is Time for New Tires 10-62
Buying New Tires 10-63
Different Size Tires and Wheels 10-65
Uniform Tire Quality Grading 10-65
Wheel Alignment and Tire Balance 10-67
Wheel Replacement 10-67
Tire Chains 10-68
If a Tire Goes Flat 10-69
Tire Sealant and Compressor Kit 10-70
Storing the Tire Sealant and Compressor Kit 10-78

Jump Starting
Jump Starting 10-79

Towing the Vehicle
Towing the Vehicle 10-82
Recreational Vehicle Towing 10-82

Appearance Care
Exterior Care 10-82
Interior Care 10-87
Floor Mats 10-91

General Information

For service and parts needs, visit your dealer. You will receive genuine GM parts and GM-trained and supported service people.

Genuine GM parts have one of these marks:

California Proposition 65 Warning

Most motor vehicles, including this one, contain and/or emit chemicals known to the State of California to cause cancer and birth defects or other reproductive harm. Engine exhaust, many parts and systems, many fluids, and some component wear by-products contain and/or emit these chemicals.

California Perchlorate Materials Requirements

Certain types of automotive applications, such as airbag initiators, safety belt pretensioners, and lithium batteries contained in Remote Keyless Entry transmitters, may contain perchlorate materials. Special handling may be necessary. For additional information, see www.dtsc.ca.gov/hazardouswaste/perchlorate.

Accessories and Modifications

Adding non-dealer accessories or making modifications to the vehicle can affect vehicle performance and safety, including such things as airbags, braking, stability, ride and

handling, emissions systems, aerodynamics, durability, and electronic systems like antilock brakes, traction control, and stability control. These accessories or modifications could even cause malfunction or damage not covered by the vehicle warranty.

Damage to vehicle components resulting from modifications or the installation or use of non-GM certified parts, including control module or software modifications, is not covered under the terms of the vehicle warranty and may affect remaining warranty coverage for affected parts.

GM Accessories are designed to complement and function with other systems on the vehicle. See your dealer to accessorize the vehicle using genuine GM Accessories installed by a dealer technician.

Also, see *Adding Equipment to the Airbag-Equipped Vehicle on page 3-25*.

Lifting the Vehicle

⚠ Warning

Lifting a vehicle can cause an injury. The vehicle can slip off the jack and roll over you or other people. You and they could be badly injured. Find a level place to lift your vehicle. To help prevent the vehicle from moving:

1. Set the parking brake firmly.
2. Put an automatic transmission in P (Park) or a manual transmission in 1 (First) or R (Reverse).
3. Turn off the engine.

To be even more certain the vehicle will not move, put blocks in front of and behind the wheels.

⚠ Warning

Getting under a vehicle when it is lifted on a jack is dangerous. If the vehicle slips off the jack, you could be badly injured or killed. Never get under a vehicle when it is supported only by a jack.

⚠ Warning

Raising the vehicle with the jack improperly positioned can damage the vehicle or the vehicle may fall and cause injury to you or others.

If a jack is used to lift the vehicle, follow the instructions that came with the jack, and be sure to use the correct lifting points to avoid damaging the vehicle.

⚠ Caution

Lifting the vehicle improperly can damage it and result in costly repairs not covered by the vehicle warranty. To lift the vehicle properly and prevent vehicle damage:

- Be sure to place a block or pad between the jack and the vehicle.
- Lift only in the areas shown in the following illustrations.

For additional information, see your dealer and the Chevrolet Corvette service manual.

⚠ Caution

The front jack pads must not contact the rocker panels, the front fenders, or the floor pan. If they do, damage may occur.

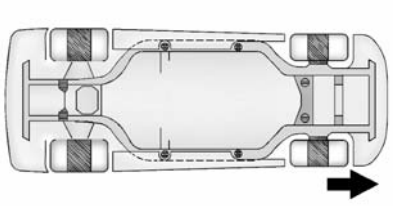

Lifting from the Front – Cradle

The front lifting points can be accessed from either side of the vehicle, behind the front tires.

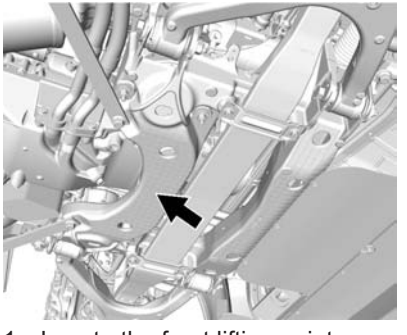

1. Locate the front lifting points.
2. Place a block or pad between the jack and the vehicle.
3. Lift the vehicle with the jack.

Lifting from the Front – Frame

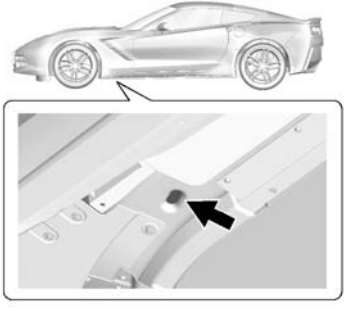

Use only a service jack with a lifting pad diameter of 64 mm (2.5 in) or smaller, and thick enough to make sure the jack does not contact the vehicle body.

Position the service jack and lifting pad under the frame rail shipping slot reinforcement.

Lifting from the Rear – Cradle

The rear lifting points can be accessed from the rear driver or passenger side of the vehicle.

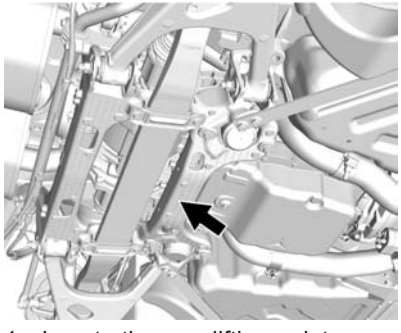

1. Locate the rear lifting points.
2. Place a block or pad between the jack and the vehicle.
3. Lift the vehicle with the jack.

Lifting from the Rear – Frame

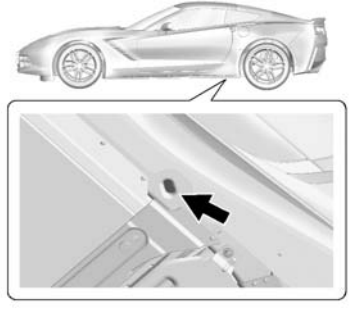

Use only a service jack with a lifting pad diameter of 64 mm (2.5 in) or smaller, and thick enough to make sure the jack does not contact the vehicle body.

Position the service jack and lifting pad under the frame rail shipping slot reinforcement.

For more information, see *Doing Your Own Service Work on page 10-5*.

Vehicle Checks

Doing Your Own Service Work

⚠ Warning

It can be dangerous to work on your vehicle if you do not have the proper knowledge, service manual, tools, or parts. Always follow owner manual procedures and consult the service manual for your vehicle before doing any service work.

If doing some of your own service work, use the proper service manual. It tells you much more about how to service the vehicle than this manual can. To order the proper service manual, see *Service Publications Ordering Information on page 13-11*.

This vehicle has an airbag system. Before attempting to do your own service work, see *Servicing the Airbag-Equipped Vehicle on page 3-24*.

Keep a record with all parts receipts and list the mileage and the date of any service work performed. See *Maintenance Records on page 11-15*.

⚠ Caution

Even small amounts of contamination can cause damage to vehicle systems. Do not allow contaminants to contact the fluids, reservoir caps, or dipsticks.

Hood

To open the hood:

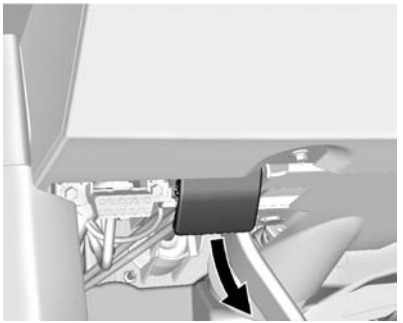

1. Pull the hood release lever inside the vehicle. It is below the instrument panel on the driver side.

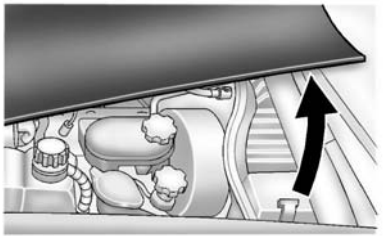

2. Go to the side of the vehicle and pull up on the rear edge of the hood, near the windshield.

Before closing the hood, be sure all the filler caps are on properly. Then, pull the hood down and close it firmly.

Engine Compartment Overview

6.2L LT1 V8 Engine (without Dry Sump Engine Oil Tank)

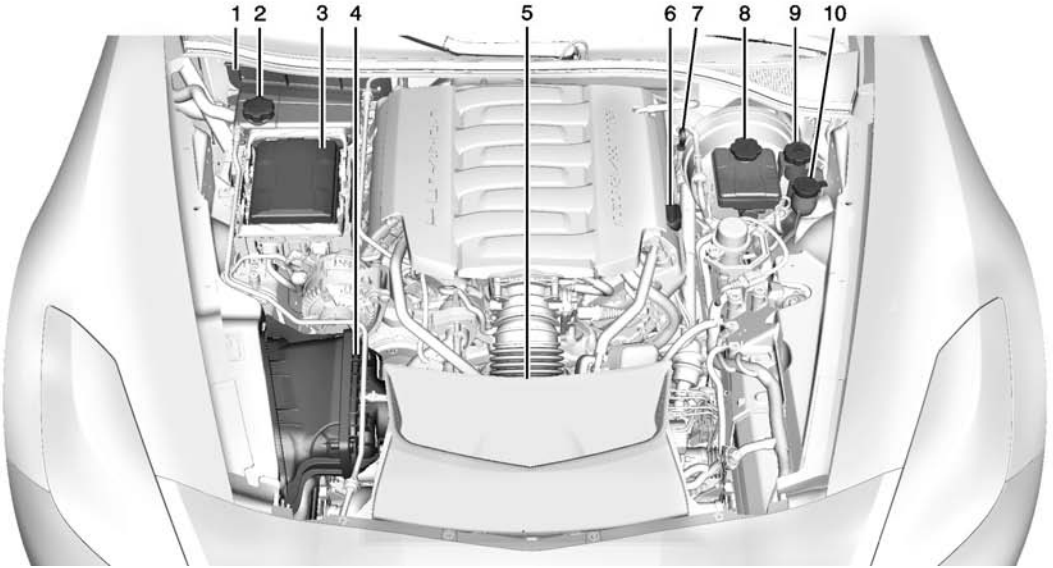

1. *Passenger Compartment Air Filter on page 8-5* (Out of View).
2. Coolant Surge Tank and Pressure Cap. See *Engine Coolant on page 10-24*.
3. *Engine Compartment Fuse Block on page 10-39*.
4. *Engine Air Cleaner/Filter on page 10-20*.
5. Engine Cooling Fan (Out of View). See *Cooling System (Aero Panel) on page 10-23* or *Cooling System (Engine) on page 10-22*.
6. Engine Oil Fill Cap. See “When to Add Engine Oil” under *Brake Fluid on page 10-32*.
7. Engine Oil Dipstick. See “Checking Engine Oil” under *Engine Oil on page 10-12*.
8. Brake Fluid Reservoir. See “Brake Fluid” under *Brakes on page 10-29*.
9. Clutch Master Cylinder Reservoir (If Equipped). See *Hydraulic Clutch on page 10-19*.
10. Windshield Washer Fluid Reservoir. See “Adding Washer Fluid” under *Washer Fluid on page 10-28*.

6.2L LT1 V8 Engine (with Z51 – Dry Sump Engine Oil Tank)

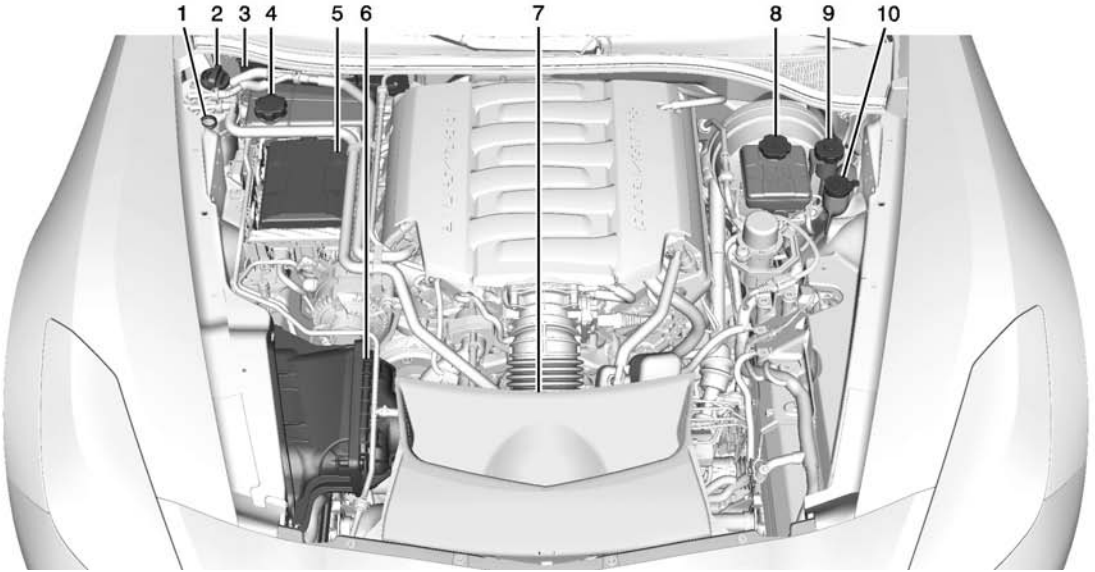

1. Engine Oil Dipstick. See “Checking Engine Oil” under *Engine Oil on page 10-12*.
2. Dry Sump Engine Oil Tank Fill Cap. See “Changing Engine Oil and Filter” *Engine Oil on page 10-12*.
3. *Passenger Compartment Air Filter on page 8-5* (Out of View).
4. Coolant Surge Tank and Pressure Cap. See *Engine Coolant on page 10-24*.
5. *Engine Compartment Fuse Block on page 10-39*.
6. *Engine Air Cleaner/Filter on page 10-20*.
7. Engine Cooling Fan (Out of View). See *Cooling System (Aero Panel) on page 10-23* or *Cooling System (Engine) on page 10-22*.
8. Brake Fluid Reservoir. See “Brake Fluid” under *Brakes on page 10-29*.
9. Clutch Master Cylinder Reservoir (If Equipped). See *Hydraulic Clutch on page 10-19*.
10. Windshield Washer Fluid Reservoir. See “Adding Washer Fluid” under *Washer Fluid on page 10-28*.

6.2L LT4 V8 Engine (with Z06 – Dry Sump Engine Oil Tank)

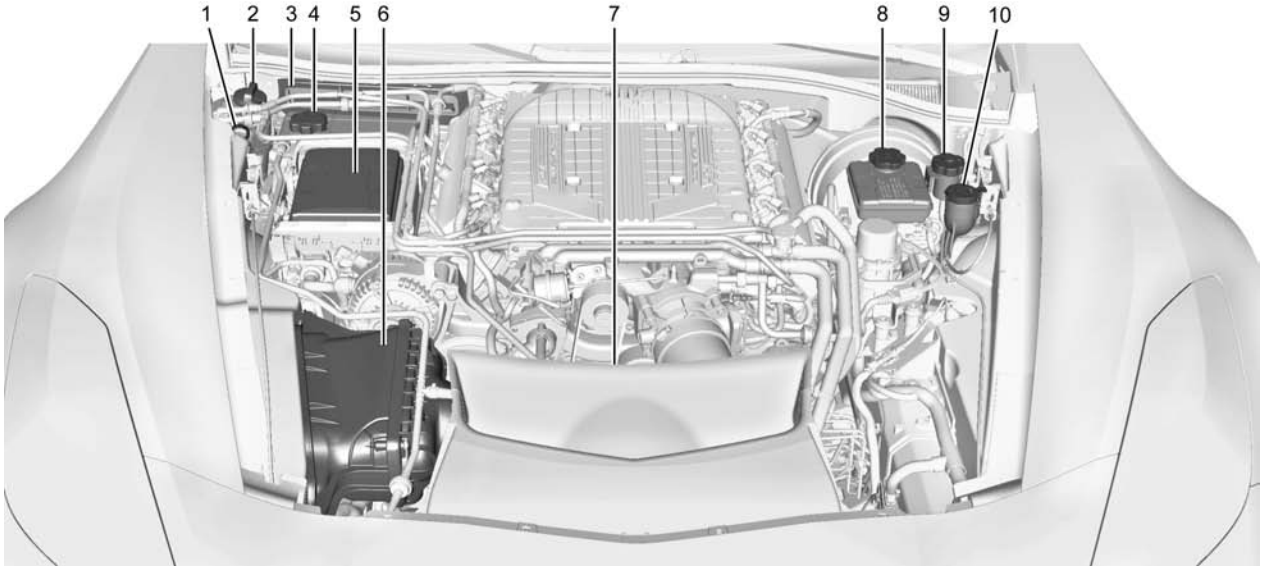

1. Engine Oil Dipstick. See “Checking Engine Oil” under *Engine Oil on page 10-12*.
2. Dry Sump Engine Oil Tank Fill Cap. See “Changing Engine Oil and Filter” *Engine Oil on page 10-12*.
3. *Passenger Compartment Air Filter on page 8-5* (Out of View).
4. Coolant Surge Tank and Pressure Cap. See *Engine Coolant on page 10-24*.
5. *Engine Compartment Fuse Block on page 10-39*.
6. *Engine Air Cleaner/Filter on page 10-20*.
7. Engine Cooling Fan (Out of View). See *Cooling System (Aero Panel) on page 10-23* or *Cooling System (Engine) on page 10-22*.
8. Brake Fluid Reservoir. See “Brake Fluid” under *Brakes on page 10-29*.
9. Clutch Master Cylinder Reservoir (If Equipped). See *Hydraulic Clutch on page 10-19*.
10. Windshield Washer Fluid Reservoir. See “Adding Washer Fluid” under *Washer Fluid on page 10-28*.

Engine Oil

To ensure proper engine performance and long life, careful attention must be paid to engine oil. Following these simple, but important steps will help protect your investment:

- Always use engine oil approved to the proper specification and of the proper viscosity grade. See “Selecting the Right Engine Oil” in this section.
- Check the engine oil level regularly and maintain the proper oil level. See “Checking Engine Oil” and “When to Add Engine Oil” in this section.
- Change the engine oil at the appropriate time. See *Engine Oil Life System on page 10-18*.
- Always dispose of engine oil properly. See “What to Do with Used Oil” in this section.

Checking Engine Oil (Except Z51 and Z06)

If the ENGINE OIL LOW–ADD OIL message displays on the Driver Information Center (DIC), check the engine oil level right away. See *Engine Oil Messages on page 5-37*. Check the engine oil level regularly.

It is a good idea to check the engine oil level at each fuel fill. In order to get an accurate reading, the vehicle must be on level ground. The engine oil dipstick handle is a loop. See *Engine Compartment Overview on page 10-7* for the location of the engine oil dipstick.

Obtaining an accurate oil level reading is essential:

1. If the engine has been running recently, turn off the engine and check within five and 10 minutes of shutoff. Checking the oil level too soon after engine shutoff will not provide an accurate oil level reading.

⚠ Warning

The engine oil dipstick handle may be hot; it could burn you. Use a towel or glove to touch the dipstick handle.

2. Pull the dipstick and wipe it with a clean paper towel or cloth, then push it back in all the way. Remove it again, keeping the tip down, and check the level.

When to Add Engine Oil (Except Z51 and Z06)

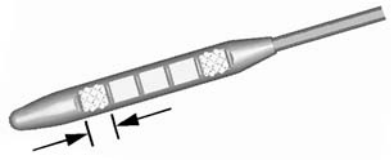

If the oil is below the cross-hatched area at the tip of the dipstick, add 1 L (1 qt) of the recommended oil and then recheck the level. See "Selecting the Right Engine Oil" in this section for an explanation of what kind of oil to use. For engine oil crankcase capacity, see *Capacities and Specifications on page 12-2*.

See *Track Events and Competitive Driving on page 9-5* for additional information on engine oil.

⚠ Caution

Do not add too much oil. Oil levels above or below the acceptable operating range shown on the dipstick are harmful to the engine. If you find that you have an oil level above the operating range, i.e., the engine has so much oil that the oil level gets above the cross-hatched area that shows the proper operating range, the engine could be damaged. You should drain out the excess oil or limit driving of the vehicle and seek a service professional to remove the excess amount of oil.

See *Engine Compartment Overview on page 10-7* for the location of the engine oil fill cap.

Add enough oil to put the level somewhere in the proper operating range. Push the dipstick all the way back in when through.

Checking Engine Oil (Z51 and Z06)

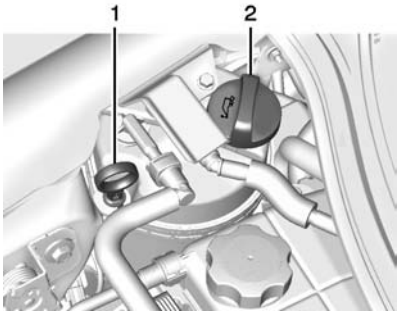

1. Engine Oil Dipstick
2. Engine Oil Fill Cap

It is a good idea to check the engine oil level at each fuel fill. In order to get an accurate reading, the vehicle must be on level ground.

The engine oil dipstick handle is a loop. The dipstick is located on the dry sump engine oil tank. See *Engine Compartment Overview on page 10-7* for the location of the dry sump engine oil tank.

These vehicles have a racetrack-ready dry sump engine lubrication system. This high performance system operates differently than a standard engine lubrication system and requires a special procedure when checking the engine oil level. Follow this procedure closely.

The engine oil level must be checked when the engine is warm. Cold oil level in the dry sump tank may not indicate the actual amount of oil in the system. With this system, engine oil is contained in an external tank, separate from the engine. Under normal operating conditions, the oil pan under the engine does not store any oil. If the vehicle has been parked for an extended period without the engine being started, some oil will seep back into the oil pan, reducing the amount of oil held in the dry sump tank and there could be no engine oil at all showing on the dipstick. This is normal since the dipstick is designed to read the engine oil level only after the engine has run long enough to reach normal operating temperature. Do not add engine oil based on cold engine dipstick readings. The engine oil level on the dipstick will also be inaccurate if checked while the engine is running.

1. To obtain an accurate engine oil level reading, warm up the engine to at least 80°C (175°F). Cold oil will not give a correct oil level reading.
2. Once the engine is warm, turn off the engine. Checking the oil while the engine is running will result in an incorrect oil level reading.
3. Check the oil level between five and 10 minutes after the engine is shut down.

⚠ Warning

The engine oil dipstick handle may be hot; it could burn you. Use a towel or glove to touch the dipstick handle.

4. Remove the dipstick from the external engine oil tank and wipe it with a clean lint-free paper towel or a cloth. Re-insert the dipstick into the external oil tank, pushing it all the way in until it stops.
5. Remove the dipstick from the oil tank and read the level on the cross-hatched area.

When to Add Engine Oil (Z51 and Z06)

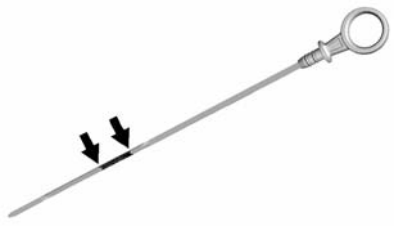

If the oil is below the cross-hatched area at the tip of the dipstick, add 1 L (1 qt) of the recommended oil through the oil fill cap opening in the oil tank and then recheck the level. See “Selecting the Right Engine Oil” for an explanation of what kind of oil to use. For engine oil crankcase capacity, see *Capacities and Specifications on page 12-2*.

See *Track Events and Competitive Driving on page 9-5* for additional information on engine oil.

⚠ Caution

Do not add too much oil. Oil levels above or below the acceptable operating range shown on the dipstick are harmful to the engine. If you find that you have an oil level above the operating range, i.e., the engine has so much oil that the oil level gets above the cross-hatched area that shows the proper operating range, the engine could be damaged. You should drain out the excess oil or limit driving of the vehicle and seek a service professional to remove the excess amount of oil.

See *Engine Compartment Overview on page 10-7* for the location of the external engine oil tank and fill cap.

Add enough oil to put the level somewhere in the proper operating range. Push the dipstick all the way back into the oil tank when through.

Changing Engine Oil and Filter (Z51 and Z06)

The vehicle may have a racetrack-ready dry sump engine lubrication system. This high performance system operates differently than a standard engine lubrication system and requires a special procedure when changing the engine oil and filter. Follow this procedure closely when changing the engine oil and filter.

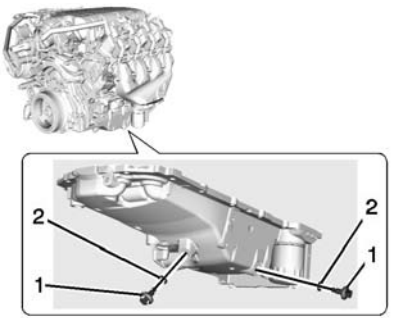

1. Engine Oil Drain Plugs
2. Seals

Steps to follow:

1. Remove the two engine oil drain plugs from the bottom of the engine oil pan. One drain plug drains the external oil tank via the oil transfer supply line. The other drain plug drains residual oil from the crankcase sump. Allow the oil to drain.
2. Once the oil has been drained from the engine, remove the engine oil filter and allow the oil to drain.
3. Reinstall both drain plugs and tighten them to 25 N•m (18 lb ft).
4. Replace the oil filter and tighten it to 3/4 to 1 turn after gasket contact. See *Maintenance Replacement Parts on page 11-13* for the correct filter.
5. Oil is filled through the opening in the top of the external engine oil tank. Remove the oil fill cap.
6. Add oil to the oil tank. See *Capacities and Specifications on page 12-2*.
7. Install the oil fill cap and insert the dipstick, if removed.
8. Start the engine and let it run at idle for at least 15 seconds. This will circulate the fresh engine oil through the lubrication system.
9. Shut off the engine and check the oil level as described under “Checking Engine Oil (Z51 and Z06).”

Selecting the Right Engine Oil

Selecting the right engine oil depends on both the proper oil specification and viscosity grade. See *Recommended Fluids and Lubricants on page 11-12*.

Specification

Ask for and use engine oils that meet the dexos1™ specification.

Engine oils that have been approved by GM as meeting the dexos1 specification are marked with the dexos1 approved logo. See www.gmdexos.com.

GM recommends Mobil 1® engine oils that show the dexos1 approved logo for its dry sump equipped engines.

⚠ Caution

Failure to use the recommended engine oil can result in engine damage not covered by the vehicle warranty. Check with your dealer or service provider on whether the oil is approved to the dexos1 specification.

Viscosity Grade

Use SAE 5W-30 viscosity grade engine oil.

Cold Temperature Operation: In an area of extreme cold, where the temperature falls below −29°C (−20° F), an SAE 0W-30 oil may be used. An oil of this viscosity grade will provide easier cold starting for the engine at extremely low temperatures. When selecting an oil of the appropriate viscosity grade, always select an oil of the correct specification. See “Specification” earlier in this section for more information.

For track events or competitive driving, use Mobil 1® 15W-50 engine oil. An instrument cluster warning light will be illuminated at high oil temperatures. See *Driver Information Center (DIC) on page 5-26*.

Engine Oil Additives/Engine Oil Flushes

Do not add anything to the oil. The recommended oils meeting the dexos1™ specification are all that is needed for good performance and engine protection.

Engine oil system flushes are not recommended and could cause engine damage not covered by the vehicle warranty.

What to Do with Used Oil

Used engine oil contains certain elements that can be unhealthy for your skin and could even cause cancer. Do not let used oil stay on your skin for very long. Clean your skin and nails with soap and water, or a good hand cleaner. Wash or properly dispose of clothing or rags containing used engine oil. See the manufacturer's warnings about the use and disposal of oil products.

Used oil can be a threat to the environment. If you change your own oil, be sure to drain all the oil from the filter before disposal. Never dispose of oil by putting it in the trash or pouring it on the ground, into sewers, or into streams or bodies of water. Recycle it by taking it to a place that collects used oil.

Engine Oil Life System

When to Change Engine Oil

This vehicle has a computer that indicates when to change the engine oil and filter. This is based on a combination of factors which include engine revolutions, engine temperature, and miles driven. Based on driving conditions, the mileage at which an oil change is indicated can vary considerably. For the oil life system to work properly, the system must be reset every time the oil is changed.

Z51 and Z06 models have a racetrack-ready dry sump engine lubrication system. This high performance system operates differently than a standard engine lubrication system and requires a special procedure when changing the engine oil and filter. See *Engine Oil on page 10-12*.

When the system has calculated that oil life has been diminished, it indicates that an oil change is necessary. A CHANGE ENGINE OIL SOON message comes on. Change the oil as soon as possible within the next 1 000 km (600 mi). It is possible that, if driving under the best conditions, the oil life system may not indicate that an oil change is necessary for up to a year. The engine oil and filter must be changed at least once a year and, at this time, the system must be reset. Your dealer has trained service people who will perform this work and reset the system. It is also important to check the oil regularly over the course of an oil drain interval and keep it at the proper level.

If the system is ever reset accidentally, the oil must be changed at 5 000 km (3,000 mi) since the last oil change. Remember to reset the oil life system whenever the oil is changed.

How to Reset the Engine Oil Life System

Reset the system whenever the engine oil is changed so that the system can calculate the next engine oil change. To reset the system:

1. Scroll through the DIC Info Pages menu until the REMAINING OIL LIFE percentage is displayed. See *Driver Information Center (DIC) on page 5-26*.
2. Press and hold the SEL button on the DIC while the Oil Life display is active. The oil life will change to 100%.

If the CHANGE ENGINE OIL SOON message comes back on when the vehicle is started, the engine oil life system has not reset. Repeat the procedure.

Automatic Transmission Fluid

How to Check Automatic Transmission Fluid

It is not necessary to check the transmission fluid level.
A transmission fluid leak is the only reason for fluid loss. If a leak occurs, take the vehicle to the dealer and have it repaired as soon as possible.

The vehicle is not equipped with a transmission fluid level dipstick. There is a special procedure for checking and changing the transmission fluid. Because this procedure is difficult, this should be done at the dealer. Contact the dealer for additional information or the procedure can be found in the service manual. To purchase a service manual, see *Service Publications Ordering Information on page 13-11*.

⚠ Caution

Use of the incorrect automatic transmission fluid may damage the vehicle, and the damage may not be covered by the vehicle warranty. Always use the automatic transmission fluid listed in *Recommended Fluids and Lubricants on page 11-12*.

Change the fluid and filter at the intervals listed in *Maintenance Schedule on page 11-2*, and be sure to use the fluid listed in *Recommended Fluids and Lubricants on page 11-12*.

Manual Transmission Fluid

It is not necessary to check the manual transmission fluid level.
A transmission fluid leak is the only reason for fluid loss. If a leak occurs, take the vehicle to the dealer and have it repaired as soon as possible. See *Recommended Fluids and Lubricants on page 11-12* for the proper fluid to use.

Hydraulic Clutch

It is not necessary to regularly check clutch fluid unless you suspect there is a leak in the system. Adding fluid will not correct a leak. A fluid loss in this system could indicate a problem. Have the system inspected and repaired.

The fluid will darken over time. See *Maintenance Schedule on page 11-2* for when to replace the fluid.

When to Check and What to Use

The hydraulic clutch fluid reservoir cap has this symbol on it. See *Engine Compartment Overview on page 10-7* for reservoir location.

Refer to *Recommended Fluids and Lubricants on page 11-12* for the proper fluid to use. The fluid requires changing. See *Maintenance Schedule on page 11-2*.

How to Check and Add Fluid

Visually check the clutch fluid reservoir to make sure the fluid level is at the MIN (minimum) line on the side of the reservoir. The hydraulic clutch fluid system should be closed and sealed.

Do not remove the cap to check the fluid level or to top off the fluid level. Remove the cap only when necessary to add the proper fluid until the level reaches the MIN line.

Engine Air Cleaner/Filter

See *Engine Compartment Overview on page 10-7* for the location of the engine air cleaner/filter.

⚠ Caution

If water is sprayed and enters the engine air cleaner/filter intake and housing, the engine could be damaged. The repairs would not be covered by the vehicle warranty.

When to Inspect the Engine Air Cleaner/Filter

Inspect or replace the air cleaner/filter at the scheduled maintenance intervals listed in *Maintenance Schedule on page 11-2*. If driving in dusty/dirty conditions, inspect the filter at each engine oil change.

How to Inspect the Engine Air Cleaner/Filter

To inspect the air cleaner/filter, remove the filter from the vehicle and lightly shake the filter to release loose dust and dirt. If the filter remains covered with dirt, a new filter is required.

To remove the hood extractor duct to gain access:

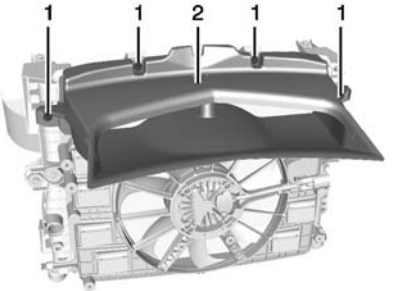

1. Bolts (4)
2. Hood Extractor Duct

1. Open the hood. See *Hood on page 10-6*.
2. Remove the four bolts (1) and the hood extractor duct (2).
3. Reverse Step 2 to replace the hood extractor duct.

To inspect or replace the engine air cleaner/filter:

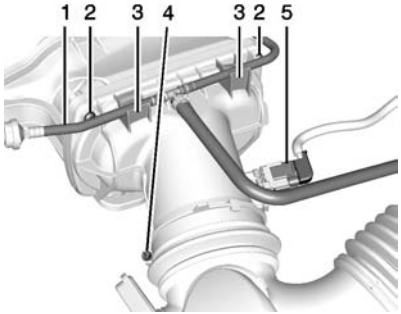

1. Surge Tank Coolant Hose
2. Screws (2)
3. Hose Retainers (2)
4. Air Duct Clamp
5. Electrical Connector

⚠ Caution

If the engine coolant surge tank hose is not carefully lifted out of the hose retainers on the air cleaner/filter cover assembly, it may be damaged and cause engine coolant to leak. Damage would not be covered by the vehicle warranty.

1. Carefully lift the surge tank coolant hose (1) from both hose retainers (3) and position the hose to be able to remove the screws securing the air cleaner/filter endcap.
2. Loosen the air duct clamp (4) at the air cleaner/filter housing endcap and move the duct out of the way.
3. Remove the electrical connector (5) from the sensor.
4. Remove the two screws (2).

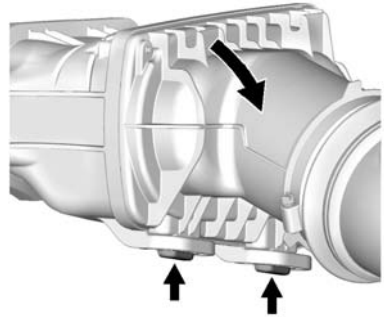

5. Turn the air cleaner/filter endcap downward and disengage the lower endcap mounting tabs from the lower retention hinge features. Be sure to insert the lower endcap mounting tabs fully into the housing retention hinge features before turning the endcap upward and replacing the screws.
6. Inspect or replace the air cleaner/filter.
7. Reverse Steps 1–6 to replace the air cleaner/filter endcap.

8. Replace the extractor hood duct. See above.

⚠ Warning

Operating the engine with the air cleaner/filter off can cause you or others to be burned. The air cleaner not only cleans the air; it helps to stop flames if the engine backfires. Use caution when working on the engine and do not drive with the air cleaner/filter off.

⚠ Caution

If the air cleaner/filter is off, dirt can easily get into the engine, which could damage it. Always have the air cleaner/filter in place when you are driving.

Cooling System (Engine)

The cooling system allows the engine to maintain the correct working temperature.

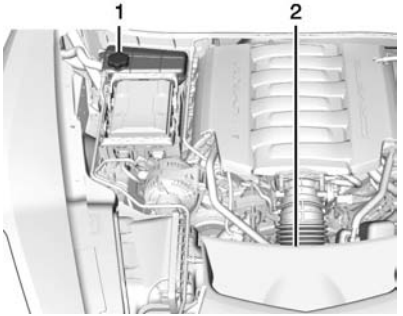

LT1 Engine (without Dry Sump Engine Oil Tank)

1. Coolant Surge Tank with Pressure Cap
2. Engine Cooling Fan (Out of View)

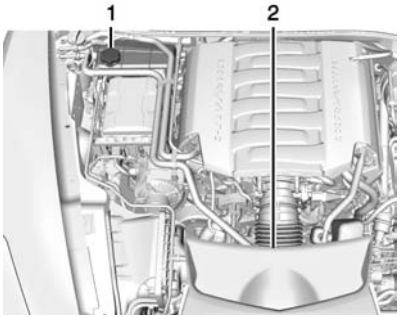

LT1 Engine (with Dry Sump Engine Oil Tank)

1. Coolant Surge Tank with Pressure Cap
2. Engine Cooling Fan (Out of View)

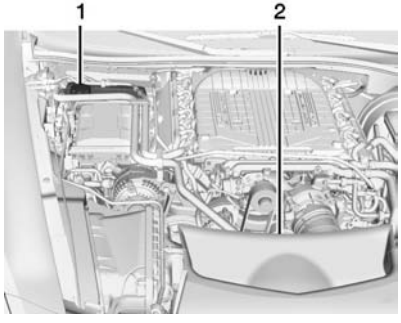

LT4 Engine (with Dry Sump Engine Oil Tank)

1. Coolant Surge Tank with Pressure Cap
2. Engine Cooling Fan (Out of View)

⚠ Warning

An electric engine cooling fan under the hood can start up even when the engine is not running

(Continued)

Warning (Continued)

and can cause injury. Keep hands, clothing, and tools away from any underhood electric fan.

⚠ Warning

Heater and radiator hoses, and other engine parts, can be very hot. Do not touch them. If you do, you can be burned.

Do not run the engine if there is a leak. If you run the engine, it could lose all coolant. That could cause an engine fire, and you could be burned. Get any leak fixed before you drive the vehicle.

⚠ Caution

Using coolant other than DEX-COOL® can cause premature engine, heater core, or radiator corrosion. In addition, the engine coolant could require changing sooner. Any repairs would not be covered by the vehicle warranty. Always use DEX-COOL (silicate-free) coolant in the vehicle.

Cooling System (Aero Panel)

The aero panel enhances aerodynamic efficiency and improves fuel economy.

Remove the aero panel and bracket to improve engine cooling and air conditioning performance when driving aggressively or in hot weather.

To remove the aero panel and bracket:

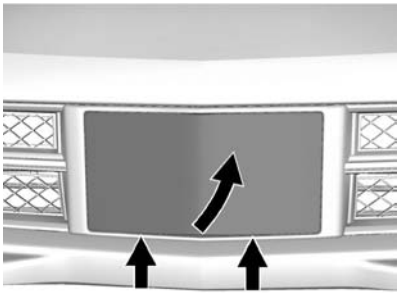

1. Press up on the two indents at the bottom and lift the aero panel off the bracket.

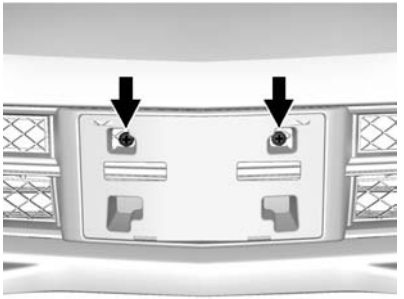

2. Unscrew the two fasteners that secure the bracket.
3. Gently pull the bracket away from the grille.

To replace the bracket and aero panel:

1. Position the bracket over the grille.
2. Secure the bracket by pushing the two fasteners into place.
3. Snap the aero panel into place.

Engine Coolant

The cooling system in the vehicle is filled with DEX-COOL® engine coolant. See *Recommended Fluids and Lubricants on page 11-12*. The fluid requires changing at certain intervals. See *Maintenance Schedule on page 11-2*.

The following explains the cooling system and how to check and add coolant when it is low. If there is a problem with engine overheating, see *Engine Overheating on page 10-27*.

What to Use

⚠ Warning

Adding only plain water or some other liquid to the cooling system can be dangerous. Plain water and other liquids, can boil before the proper coolant mixture will. The vehicle's coolant warning system is set for the proper

(Continued)

Warning (Continued)

coolant mixture. With plain water or the wrong mixture, the engine could get too hot but you would not get the overheat warning. The engine could catch fire and you or others could be burned. Use a mixture of 40% DEX-COOL coolant and 60% clean, drinkable water.

Use a mixture of 40% DEX-COOL coolant and 60% clean, drinkable water. If using this mixture, nothing else needs to be added. This mixture:

- Gives freezing protection down to −28°C (−18°F), outside temperature.
- Gives boiling protection up to 129°C (265°F), engine temperature.
- Protects against rust and corrosion.
- Will not damage aluminum parts.
- Helps keep the proper engine temperature.

⚠ Caution

If improper coolant mixture, inhibitors, or additives are used in the vehicle cooling system, the engine could overheat and be damaged. Too much water in the mixture can freeze and crack engine cooling parts. The repairs would not be covered by the vehicle warranty. Use only the proper mixture of engine coolant for the cooling system. See *Recommended Fluids and Lubricants on page 11-12*.

Never dispose of engine coolant by putting it in the trash, pouring it on the ground, or into sewers, streams, or bodies of water. Have the coolant changed by an authorized service center, familiar with legal requirements regarding used coolant disposal. This will help protect the environment and your health.

If ambient temperatures are anticipated below −28°C (−18°F), make sure a proper mixture ratio of 50% DEX-COOL coolant and 50% clean, drinkable water is used.

Checking Coolant

The vehicle must be on a level surface when checking the coolant level.

Check to see if coolant is visible in the coolant surge tank. If the coolant inside the coolant surge tank is boiling, do not do anything else until it cools down. If coolant is visible but the coolant level is not at or above the cold fill line, add a mixture of 40% DEX-COOL coolant and 60% clean, drinkable water at the coolant recovery tank, but be sure the cooling system is cool before this is done. See *Engine Overheating on page 10-27*.

The engine coolant surge tank is toward the rear of the engine compartment on the passenger side of the vehicle. See *Engine Compartment Overview on page 10-7*.

When the engine is cold, the coolant level should be at the cold fill line on the coolant surge tank.

When the engine is hot, the level could be higher than the cold fill line. If the coolant is below the cold fill line when the engine is hot, there could be a leak in the cooling system.

If the coolant is low, add the coolant or take the vehicle to a dealer for service.

How to Add Coolant to the Coolant Surge Tank

⚠ Warning

You can be burned if you spill coolant on hot engine parts. Coolant contains ethylene glycol and it will burn if the engine parts are hot enough. Do not spill coolant on a hot engine.

⚠ Warning

Steam and scalding liquids from a hot cooling system can blow out and burn you badly. Never turn the cap when the cooling system, including the surge tank pressure cap, is hot. Wait for the cooling system and surge tank pressure cap to cool.

If coolant is needed, add the proper DEX-COOL coolant mixture directly to the surge tank, but be sure the cooling system is cool before this is done.

1. When the cooling system, including the coolant surge tank pressure cap and upper radiator hose, is no longer hot, remove the pressure cap.

   Turn the pressure cap slowly counterclockwise about one-quarter turn and then stop.

   If a hiss is heard, wait for that to stop. A hiss means there is still some pressure left.

2. Keep turning the pressure cap slowly, and remove it.

3. Fill the coolant surge tank with the proper DEX-COOL coolant mixture until the level inside stabilizes at the cold fill line on the front of the surge tank.

4. With the coolant surge tank pressure cap off, start the engine and let it run until the upper radiator hose can be felt getting hot. Any time during this procedure, watch out for the engine cooling fan.

   By this time, the coolant level inside the coolant surge tank may be lower. If the level is lower, add more of the proper mixture to the coolant surge tank until the level stabilizes at the cold fill line on the coolant surge tank.

5. Replace the pressure cap tightly.

   Check the level in the surge tank when the system has cooled down. If the coolant is not at the proper level, repeat Steps 1−4, then reinstall the pressure cap. If the coolant is not at the proper level when the system cools down again, see the dealer.

⚠ Caution

If the pressure cap is not tightly installed, coolant loss and possible engine damage may occur. Be sure the cap is properly and tightly secured.

Engine Overheating

The vehicle has several indicators to warn of engine overheating.

There is an engine coolant temperature gauge on the instrument cluster. See *Engine Coolant Temperature Gauge on page 5-15*. The vehicle may also display a message on the Driver Information Center (DIC). See *Engine Cooling System Messages on page 5-37*.

If the decision is made not to lift the hood but to get service help right away, see *Roadside Assistance Program on page 13-5*.

If the decision is made to lift the hood, make sure the vehicle is parked on a level surface.

Then check to see if the engine cooling fan is running. If the engine is overheating, the fan should be running. If it is not, do not continue to run the engine and have the vehicle serviced.

⚠ Caution

Running the engine without coolant may cause damage or a fire. Vehicle damage would not be covered by the vehicle warranty.

If Steam Is Coming from the Engine

⚠ Warning

Steam from an overheated engine can burn you badly, even if you just open the hood. Stay away

(Continued)

Warning (Continued)

from the engine if you see or hear steam coming from it. Just turn it off and get everyone away from the vehicle until it cools down. Wait until there is no sign of steam or coolant before you open the hood.

If you keep driving when the engine is overheated, the liquids in it can catch fire. You or others could be badly burned. Stop the engine if it overheats, and get out of the vehicle until the engine is cool.

If No Steam Is Coming from the Engine

If an engine overheat warning is displayed but no steam can be seen or heard, the problem may not be too serious. Sometimes the engine can get a little too hot when the vehicle:

- Climbs a long hill on a hot day.
- Stops after high-speed driving.
- Idles for long periods in traffic.

If the overheat warning is displayed with no sign of steam:

1. Turn the air conditioning off.
2. Turn the heater on to the highest temperature and to the highest fan speed. Open the windows as necessary.
3. When it is safe to do so, pull off the road, shift to P (Park) or N (Neutral) and let the engine idle.

If the temperature overheat gauge is no longer in the shaded area or an overheat warning no longer displays, the vehicle can be driven. Continue to drive the vehicle slowly for about 10 minutes. Keep a safe vehicle distance from the vehicle in front. If the warning does not come back on, continue to drive normally and have the cooling system checked for proper fill and function.

If the warning continues, pull over, stop, and park the vehicle right away.

If there is no sign of steam, idle the engine for three minutes while parked. If the warning is still displayed, turn off the engine until it cools down.

Washer Fluid

What to Use

When the vehicle needs windshield washer fluid, be sure to read the manufacturer instructions before use. If the vehicle will be operating in an area where the temperature

may fall below freezing, use a fluid that has sufficient protection against freezing.

Adding Washer Fluid

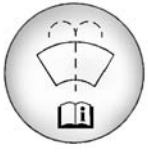

Open the cap with the washer symbol on it. Add washer fluid until the tank is full. See *Engine Compartment Overview on page 10-7*.

⚠ Caution

- Do not use engine coolant (antifreeze) in the windshield washer. It can damage the windshield washer system and paint.

(Continued)

Caution (Continued)

- Do not mix water with ready-to-use washer fluid. Water can cause the solution to freeze and damage the washer fluid tank and other parts of the washer system.
- When using concentrated washer fluid, follow the manufacturer instructions for adding water.
- Fill the washer fluid tank only three-quarters full when it is very cold. This allows for fluid expansion if freezing occurs, which could damage the tank if it is completely full.

Brakes

Visually inspect outer brake pads through the wheel. Replace brake pads when they are worn to 2 mm of pad thickness. New pads are 10 mm (0.4 in) thick.

Brake Wear (Except Z06 Model with Z07 Package)

Disc brake pads have built-in wear indicators that make a high-pitched warning sound when the brake pads are worn and new pads are needed. The sound can come and go or be heard all the time the vehicle is moving, except when applying the brake pedal firmly.

⚠ Warning

The brake wear warning sound means that soon the brakes will not work well. That could lead to a crash. When the brake wear warning sound is heard, have the vehicle serviced.

⚠ Caution

Continuing to drive with worn-out brake pads could result in costly brake repair.

Under certain weather or operating conditions, occasional brake noise might be heard with the vehicle's performance braking system. This brake system is designed for superior fade resistance and consistent operation using high performance brake pads. Brake squeal is normal and does not affect system performance.

Brake dust is normal on the performance braking system. This does not indicate a problem with the brake system.

Brake linings should always be replaced as complete axle sets.

Brake Wear (Z06 Model with Z07 Package)

This vehicle does not have built-in brake pad wear indicators. Visually inspect the brake pads periodically and any time the tires are removed.

⚠ Caution

Continuing to drive with worn-out brake pads could result in costly brake repair.

Make sure that the brakes have been given sufficient time to cool and then set the parking brake.

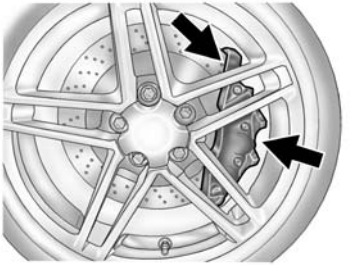

Rear

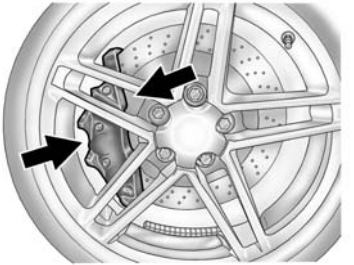

Front

Z06 models with the Z07 package have an electronic brake pad wear sensor system. When pads are worn, the CHANGE BRAKE PADS message displays in the Driver Information Center (DIC). See *Brake System Messages on page 5-34*.

Some driving conditions or climates can cause a brake squeal when the brakes are first applied or lightly applied. This does not mean something is wrong with the brakes.

Brake linings should always be replaced as complete axle sets.

Brake Rotor Wear

Z06 models may have ceramic brake rotors. Visually inspect rotors whenever the brake pads are replaced. Weigh rotors before brake pads are replaced to confirm that the rotor mass is greater than the wear-out mass printed on the rotor. The rotor can be reused if the weight of the rotor is above the mass limit. See the service manual for rotor inspection and weighing methods. See *Service Publications Ordering Information on page 13-11*.

Brake Rotor Protector

⚠ Warning

Ceramic rotors will be very hot after operation and touching them may cause burns. Be sure brake system is completely cool prior to installation of protector, or coming in contact with them.

⚠ Caution

Rotors may be chipped if hard contact is made with the wheel during wheel installation or removal. Always use the rotor protectors. Follow the wheel removal and installation instructions.

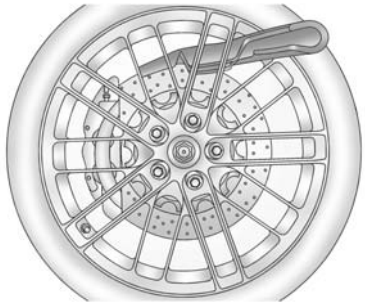

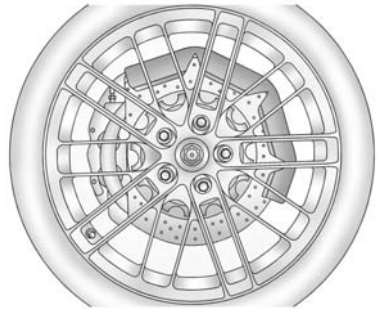

A rotor protector should always be installed before any wheel removal. Install the protector by feeding it through the wheel spokes and slipping it over the outer edge of the rotor. Leave the protector in place, over the rotor edge, until the wheel is reinstalled. Rotor protectors are available through your dealer.

Brake Pedal Travel

See your dealer if the brake pedal does not return to normal height, or if there is a rapid increase in pedal travel. This could be a sign that brake service may be required.

Replacing Brake System Parts

Always replace brake system parts with new, approved replacement parts. If this is not done, the brakes may not work properly. The braking performance expected can change in many other ways if the wrong replacement brake parts are installed or parts are improperly installed.

Brake Fluid

The brake master cylinder reservoir is filled with DOT 3 brake fluid. See *Engine Compartment Overview on page 10-7* for the location of the reservoir.

There are only two reasons why the brake fluid level in the reservoir might go down:

- The brake fluid level goes down because of normal brake lining wear. When new linings are installed, the fluid level goes back up.
- A fluid leak in the brake hydraulic system can also cause a low fluid level. Have the brake hydraulic system fixed, since a leak means that sooner or later the brakes will not work well.

Do not top off the brake fluid. Adding fluid does not correct a leak. If fluid is added when the linings are worn, there will be too much fluid when new brake linings are installed. Add or remove brake fluid, as necessary, only when work is done on the brake hydraulic system.

⚠ Warning

If too much brake fluid is added, it can spill on the engine and burn, if the engine is hot enough. You or others could be burned, and the vehicle could be damaged. Add brake fluid only when work is done on the brake hydraulic system. See “Checking Brake Fluid” in this section.

Refer to the Maintenance Schedule to determine when to check the brake fluid. See *Maintenance Schedule on page 11-2*.

Checking Brake Fluid

Check brake fluid by looking at the brake fluid reservoir. See *Engine Compartment Overview on page 10-7*.

The fluid level should be above the MIN mark on the reservoir. If it is not, have the brake hydraulic system checked to see if there is a leak.

After work is done on the brake hydraulic system, make sure the level is between the MIN and MAX marks.

What to Add

Use only new DOT 3 brake fluid from a sealed container. See *Recommended Fluids and Lubricants on page 11-12*.

Always clean the brake fluid reservoir cap and the area around the cap before removing it. This helps keep dirt from entering the reservoir.

⚠ Warning

With the wrong kind of fluid in the brake hydraulic system, the brakes might not work well. This could cause a crash. Always use the proper brake fluid.

⚠ Caution

- Using the wrong fluid can badly damage brake hydraulic system parts. For example, just a few drops of mineral-based oil, such as engine oil, in the brake hydraulic system can damage brake hydraulic system parts so badly that they will have to be replaced. Do not let someone put in the wrong kind of fluid.
- If brake fluid is spilled on the vehicle's painted surfaces, the paint finish can be damaged. Be careful not to spill brake fluid on the vehicle. If you do, wash it off immediately.

Battery

The original equipment battery is maintenance free. Do not remove the cap and do not add fluid.

Refer to the replacement number on the original battery label when a new battery is needed.

For battery replacement, see your dealer or the service manual. To purchase a service manual, see *Service Publications Ordering Information on page 13-11*.

⚠ Warning

Battery posts, terminals, and related accessories contain lead and lead compounds, chemicals known to the State of California to cause cancer and reproductive harm. Wash hands after handling.

Vehicle Storage

⚠ Warning

Batteries have acid that can burn you and gas that can explode. You can be badly hurt if you are

(Continued)

Warning (Continued)

not careful. See *Jump Starting on page 10-79* for tips on working around a battery without getting hurt.

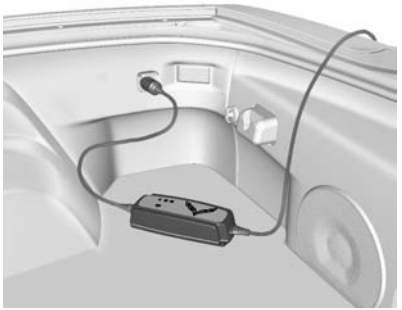

Some vehicles have a battery maintainer package. Follow the instructions provided with the battery maintainer package to keep the battery charged when the vehicle is not in use. Plug the battery maintainer into the rear Accessory Power Outlet (APO) only. The front APO turns off after the Ignition is off.

For vehicles without a battery maintainer, see the following information:

Infrequent Usage: Remove the black, negative (−) cable from the battery to keep the battery from running down.

See “Window Indexing” under *Power Windows on page 2-22*.

Extended Storage: It is recommended that the battery maintainer package be used. However, if not, remove the black, negative (−) cable from the battery. All vehicle memory settings will need to be reset when battery power is restored.

Rear Axle

When to Check Lubricant

It is not necessary to regularly check rear axle fluid unless a leak is suspected or an unusual noise is heard. A fluid loss could indicate a problem. Have it inspected and repaired.

How to Check Lubricant

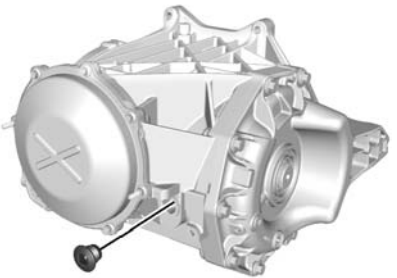

To get an accurate reading, the vehicle should be on a level surface.

The fluid level should be at or within 13 mm (0.5 in) of the bottom of the fill plug hole threads. If it is at this level, no additional fluid is needed. If the fluid level is below 13 mm (0.5 in), add fluid until it is above this level.

What to Use

To add lubricant when the level is low or to completely refill after draining, see *Recommended Fluids and Lubricants on page 11-12*. Then fill to within 13 mm (0.5 in) of the bottom of the fill plug hole threads with the required lubricant.

Starter Switch Check

⚠ Warning

When you are doing this inspection, the vehicle could move suddenly. If the vehicle moves, you or others could be injured.

1. Before starting this check, be sure there is enough room around the vehicle.
2. Firmly apply both the parking brake and the regular brake. See *Electric Parking Brake on page 9-35*.

   Do not use the accelerator pedal, and be ready to turn off the engine immediately if it starts.
3. For automatic transmission vehicles, try to start the engine in each gear. The vehicle should start only in P (Park) or N (Neutral). If the vehicle starts in any other position, contact your dealer for service.

   For manual transmission vehicles, put the shift lever in Neutral, push the clutch pedal down halfway, and try to start the engine. The vehicle should start only when the clutch pedal is pushed down all the way to the floor. If the vehicle starts when the clutch pedal is not pushed all the way down, contact your dealer for service.

Automatic Transmission Shift Lock Control Function Check

⚠ Warning

When you are doing this inspection, the vehicle could move suddenly. If the vehicle moves, you or others could be injured.

1. Before starting this check, be sure there is enough room around the vehicle. It should be parked on a level surface.
2. Apply the parking brake. See *Electric Parking Brake on page 9-35*.

   Be ready to apply the regular brake immediately if the vehicle begins to move.
3. With the engine off, turn the ignition on, but do not start the engine. Without applying the regular brake, try to move the

shift lever out of P (Park) with normal effort. If the shift lever moves out of P (Park), contact your dealer for service.

Park Brake and P (Park) Mechanism Check

⚠ Warning

When you are doing this check, the vehicle could begin to move. You or others could be injured and property could be damaged. Make sure there is room in front of the vehicle in case it begins to roll. Be ready to apply the regular brake at once should the vehicle begin to move.

Park on a fairly steep hill, with the vehicle facing downhill. Keeping your foot on the regular brake, set the parking brake.

- To check the parking brake's holding ability: With the engine running and the transmission in N (Neutral), slowly remove foot pressure from the regular brake pedal. Do this until the vehicle is held by the parking brake only.
- To check the P (Park) mechanism's holding ability: With the engine running, shift to P (Park). Then release the parking brake followed by the regular brake.

Contact your dealer if service is required.

Wiper Blade Replacement

Windshield wiper blades should be inspected for wear and cracking.

Replacement blades come in different types and are removed in different ways. For proper type and length, see *Maintenance Replacement Parts on page 11-13*.

To replace the windshield wiper blade:

1. Open the hood.
2. Pull the windshield wiper assembly away from the windshield.

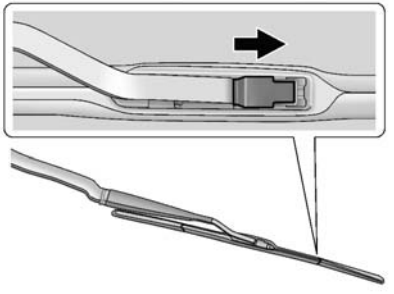

3. Lift up on the latch in the middle of the wiper blade where the wiper arm attaches.
4. With the latch open, pull the wiper blade down toward the windshield far enough to release it from the J-hooked end of the wiper arm.

5. Remove the wiper blade.

   Allowing the wiper blade arm to touch the windshield when no wiper blade is installed could damage the windshield. Any damage that occurs would not be covered by the vehicle warranty. Do not allow the wiper blade arm to touch the windshield.

6. Reverse Steps 1–3 for wiper blade replacement.

Windshield Replacement

The windshield is part of the HUD system. If the vehicle has to have the windshield replaced, get one that is designed for HUD or the HUD image may look out of focus.

Headlamp Aiming

Headlamp aim has been preset and should need no further adjustment.

If the vehicle is damaged in a crash, the headlamp aim may be affected. If adjustment to the headlamps is necessary, see your dealer.

Bulb Replacement

For the proper type of replacement bulbs, see *Replacement Bulbs on page 10-38*.

For any bulb-changing procedure not listed in this section, contact your dealer.

High Intensity Discharge (HID) Lighting

⚠ Warning

The high intensity discharge lighting system operates at a very high voltage. If you try to service any of the system components, you could be seriously injured. Have your dealer or a qualified technician service them.

After an HID headlamp bulb has been replaced, the beam might be a slightly different shade than it was originally. This is normal.

LED Lighting

This vehicle has several LED lamps. For replacement of any LED lighting assembly, contact your dealer.

License Plate Lamp

To replace one of these bulbs:

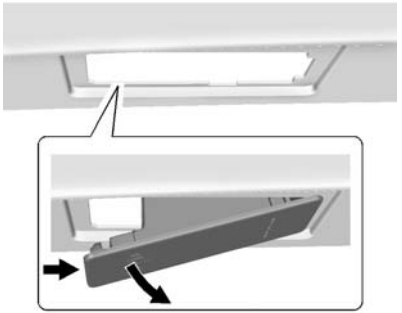

Passenger Side Shown, Driver Side Similar

1. Push the lamp assembly toward the right.
2. Pull the lamp assembly down to remove.

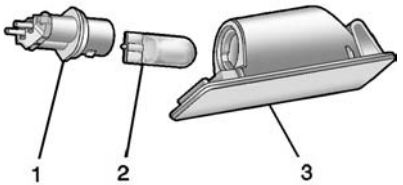

3. Turn the bulb socket (1) counterclockwise to remove it from the lamp assembly (3).
4. Pull the bulb (2) straight out of the bulb socket.
5. Push the replacement bulb straight into the bulb socket and turn the bulb socket clockwise to install it into the lamp assembly.
6. Push the lamp assembly back into position until the release tab locks into place.

Replacement Bulbs

Exterior Lamp	Bulb Number
License Plate Lamp	W5W LL

For replacement bulbs not listed here, contact your dealer.

Electrical System

Electrical System Overload

The vehicle has fuses to protect against an electrical system overload. Fuses also protect power devices in the vehicle.

Replace a bad fuse with a new one of the identical size and rating.

If there is a problem on the road and a fuse needs to be replaced, there are some spare fuses and a fuse puller in the Instrument Panel Fuse Block. The same amperage fuse can also be borrowed. Choose some feature of the vehicle that is not needed to use and replace it as soon as possible.

Windshield Wipers

If the wiper motor overheats due to heavy snow or ice, the windshield wipers will stop until the motor cools and will then restart.

Although the circuit is protected from electrical overload, overload due to heavy snow or ice may cause wiper linkage damage. Always clear ice and heavy snow from the windshield before using the windshield wipers.

If the overload is caused by an electrical problem and not snow or ice, be sure to get it fixed.

Fuses

The wiring circuits in the vehicle are protected from short circuits by fuses. This greatly reduces the chance of fires caused by electrical problems.

Look at the silver-colored band inside the fuse. If the band is broken or melted, replace the fuse. Be sure you replace a bad fuse with a new one of the identical size and rating.

Fuses of the same amperage can be temporarily borrowed from another fuse location, if a fuse goes out. Replace the fuse as soon as you can.

Engine Compartment Fuse Block

There is one fuse block in the engine compartment on the passenger side of the vehicle. See *Engine Compartment Overview on page 10-7* for more information on location.

⚠ Caution

Spilling liquid on any electrical component on the vehicle may damage it. Always keep the covers on any electrical component.

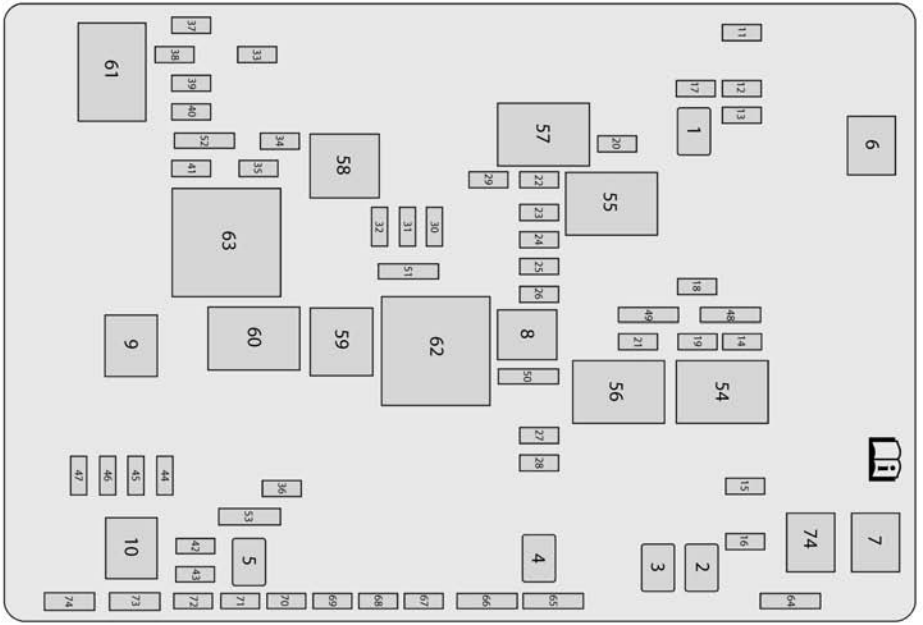
61
37
38
33
39
40
52
34
41
35
58
63
32
31
30
51
57
20
29
22
23
24
25
26
55
1
11
17
12
13
6
18
49
48
21
19
14
9
60
59
62
8
50
56
54
27
28
47
46
45
44
36
53
15
10
42
43
5
4
3
2
16
74
7
74
73
72
71
70
69
68
67
66
65
64

The vehicle may not be equipped with all of the fuses, relays, and features shown.

Micro J-Case Fuses	Usage
1	Front Wiper
2	Starter
3	Antilock Brake System Valves
4	Engine Control Module
5	Electric Parking Brake

J-Case Fuses	Usage
6	Front Heater, Ventilation, and Air Conditioning
7	Antilock Brake System Pump
8	Logistics

J-Case Fuses	Usage
9	Vacuum Pump
10	Electronic Rear Differential Module
74	Transmission Cooling Fan 2

Micro Fuses 2-pin	Usage
11	Heated Seat 1
12	Column Lock Module
13	Steering Column
14	Glove Box
15	Engine Inside Position
16	Body Control Module 6
17	Heater, Ventilation, and Air Conditioning Controls

Micro Fuses 2-pin	Usage
18	Body Control Module 5
19	Heated Seat 2
20	Body Control Module 7
21	Electric Steering Column Lock
22	Display
23	Auxiliary Outlet
24	Radio
25	Instrument Cluster HUD
26	Inside Rearview Mirror
27	Odd Ignition
28	Even Ignition
29	Data Link Connector
30	Seat Fan

Micro Fuses 2-pin	Usage
31	Fuel Pump Power Module
32	Exhaust Valve 1
33	Horn
34	Headlamp Washer
35	Air Conditioning Compressor Clutch
36	Engine Outside Position
37	Real Time Damping
38	Intercooler
39	Left Headlamp
40	Right Headlpamp
41	Headlamp Washer Pump
42	Exhaust Valve 2
43	Reverse Lockout

Micro Fuses 2-pin	Usage
44	Electric Rear Differential Module
45	Rear Transmission Cooler Fan
46	Transmission Control Module
47	Canister Vent

Micro Fuses 3-pin	Usage
48	Integrated Chassis Control Module/ Automatic Occupant Sensing
49	Theft/Vehicle Interface Module
50	Engine/ Transmission
51	Instrument Cluster
52	Headlamp High Beam

Micro Fuses 3-pin	Usage
53	Transmission Control Module/ Engine Control Module

Micro Relays	Usage
54	Starter
55	Front Wiper Low/High
56	Run/Crank
57	Front Wiper Motor
58	Headlamp Washer
59	Air Conditioning Control
60	Logistics 1
61	Headlamp Low

Mini Relays	Usage
62	Engine Control Module
63	Vacuum Pump

SPARE FUSES	Usage
64	Spare
65	Spare
66	Spare
67	Spare
68	Spare
69	Spare
70	Spare
71	Spare
72	Spare
73	Spare

Rear Compartment Fuse Block

The rear compartment fuse block is in the rear of the vehicle, under the load floor. Lift the carpet and access door in the center of the load floor to access the fuses.

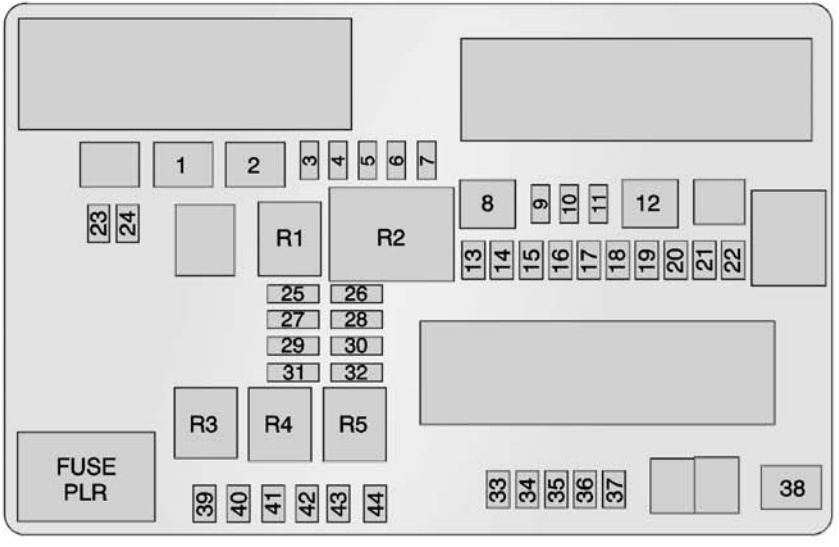
1
2
3
4
5
6
7
8
9
10
11
12
23
24
R1
R2
13
14
15
16
17
18
19
20
21
22
25
26
27
28
29
30
31
32
R3
R4
R5
FUSE
PLR
39
40
41
42
43
44
33
34
35
36
37
38

You can remove fuses using the fuse puller.

The vehicle may not be equipped with all of the fuses, relays, and features shown.

Fuses	Usage
1	Window
2	Driver Power Seat
3	PEPS 2
4	PEPS 1
5	Engine Control Module
6	Heated Mirrors
7	Body Control Module 4
8	Rear Window Defogger
9	GBS
10	Body Control Module 2
11	Steering Wheel

Fuses	Usage
12	Passenger Power Seat
13	Not Used
14	Outside Rearview Mirror
15	Body Control Module 1
16	Body Control Module 3
17	Sensing Diagnostic Module/Automatic Occupant Sensing
18	Logistics 2
19	Body Control Module 8
20	Integrated Chassis Control Module
21	Amplifier
22	Rear Accessory Power Outlet
23	Rear Closure

Fuses	Usage
24	Memory Seat Module/ Convertible Top
25	Theft-Deterrent PSM
26	Pressure Vent (Coupe Only)
27	OnStar (If Equipped)
28	Not Used
29	Not Used
30	Fuel Pump Power Module
31	Not Used
32	Battery Regulated Voltage Control
33	Not Used
34	Convertible Top Solenoid
35	Not Used

Fuses	Usage
36	Passenger Window Switch
37	Front Accessory Power Outlet
38	Not Used
39	Spare
40	Spare
41	Spare
42	Spare
43	Spare
44	Spare

Relays	Usage
R1	Logistics 2
R2	Rear Window Defogger
R3	Not Used
R4	Front Accessory Power Outlet
R5	Theft (Door Lock Security)

Wheels and Tires

Tires

Every new GM vehicle has high-quality tires made by a leading tire manufacturer. See the warranty manual for information regarding the tire warranty and where to get service. For additional information refer to the tire manufacturer.

⚠ Warning

- Poorly maintained and improperly used tires are dangerous.
- Overloading the tires can cause overheating as a result of too much flexing. There could be a blowout

(Continued)

Warning (Continued)

and a serious crash. See *Vehicle Load Limits on page 9-14*.

- Underinflated tires pose the same danger as overloaded tires. The resulting crash could cause serious injury. Check all tires frequently to maintain the recommended pressure. Tire pressure should be checked when the tires are cold.
- Overinflated tires are more likely to be cut, punctured, or broken by a sudden impact — such as when hitting a pothole. Keep tires at the recommended pressure.

(Continued)

Warning (Continued)

- Worn or old tires can cause a crash. If the tread is badly worn, replace them.
- Replace any tires that have been damaged by impacts with potholes, curbs, etc.
- Improperly repaired tires can cause a crash. Only the dealer or an authorized tire service center should repair, replace, dismount, and mount the tires.
- Do not spin the tires in excess of 56 km/h (35 mph) on slippery surfaces such as snow, mud, ice, etc. Excessive spinning may cause the tires to explode.

See *Tire Pressure for High-Speed Operation on page 10-57* for inflation pressure adjustment for high-speed driving.

Winter Tires

This vehicle was not originally equipped with winter tires. Winter tires are designed for increased traction on snow and ice-covered roads. Consider installing winter tires on the vehicle if frequent driving on ice or snow covered roads is expected. See your dealer for details regarding winter tire availability and proper tire selection. Also, see *Buying New Tires on page 10-63*.

With winter tires, there may be decreased dry road traction, increased road noise, and shorter tread life. After changing to winter tires, be alert for changes in vehicle handling and braking.

If using winter tires:

- Use tires of the same brand and tread type on all four wheel positions.
- Use only radial ply tires of the same size, load range, and speed rating as the original equipment tires.

Winter tires with the same speed rating as the original equipment tires may not be available for H, V, W, Y, and ZR speed rated tires. If winter tires with a lower speed rating are chosen, never exceed the tire's maximum speed capability.

Run-Flat Tires

This vehicle, when new, had run-flat tires. There is no spare tire, no tire changing equipment, and no place to store a tire in the vehicle.

The vehicle also has a Tire Pressure Monitor System (TPMS) that indicates a loss of tire pressure in any of the tires.

⚠ Warning

If the low tire warning light displays on the instrument cluster, the handling capabilities will be reduced during severe maneuvers. Driving too fast could cause loss of control and you or others could be injured. Do not drive over 80 km/h (50 mph) when the low tire warning light is displayed. Drive cautiously and check the tire pressures as soon as possible.

Run-flat tires can be driven on with no air pressure. There is no need to stop on the side of the road to change the tire. Continue driving; however, do not drive too far or too fast. Driving on the tire may not be possible if there is permanent damage. To prevent permanent damage, the tire can be driven with no air pressure for up to 80 km (50 mi) at speeds slower than 80 km/h (50 mph). As soon as possible, contact the nearest authorized GM or run-flat servicing facility for inspection and repair or replacement.

When driving on a deflated run-flat tire, avoid potholes and other road hazards that could damage the tire and/or wheel beyond repair. When a tire has been damaged, or if driven any distance while deflated, check with an authorized run-flat tire service center to determine whether the tire can be repaired or should be replaced. To maintain the run-flat feature, all replacement tires must be run-flat tires.

To locate the nearest GM or run-flat servicing facility, call Customer Assistance.

The valve stems on run-flat tires have sensors that are part of the TPMS. See *Tire Pressure Monitor System on page 10-57*. These sensors contain batteries that are designed to last for 10 years under

normal driving conditions. See your dealer for wheel or sensor replacement.

⚠ Caution

Using liquid sealants can damage the tire valves and tire pressure monitor sensors in the run-flat tires. This damage is not covered by the vehicle warranty. Do not use liquid sealants in run-flat tires.

Low-Profile Tires

Low-Profile Performance Tire

The original equipment tires on this vehicle are classified as low-profile performance tires. These tires are designed for very responsive driving on wet or dry pavement, however, may produce more road noise and tend to wear faster.

⚠ Caution

Low-profile tires are more susceptible to damage from road hazards or curb impact than standard profile tires. Tire and/or wheel assembly damage can occur when coming into contact with road hazards like potholes, or sharp edged objects, or when sliding into a curb. The warranty does not cover this type of damage. Keep tires set to the correct inflation pressure and when possible, avoid contact with curbs, potholes, and other road hazards.

Competition Oriented Tires

This vehicle may come with P285/30ZR19 and P335/25ZR20 Michelin PS CUP2 competition oriented tires that are DOT approved for street use. Competition oriented tires use a special tread pattern and compound that provide more grip than normal road tires. The minimum tread depth will be reached earlier than typical tires, resulting in reduced tire life. This special tread pattern and compound will have decreased performance in cold climates, heavy rain, and standing water. We recommend installing winter tires on the vehicle when driving at temperatures below approximately 10°C (50°F) or on ice or snow covered roads. See *Winter Tires on page 10-47*.

⚠ Warning

Driving on wet roads, in heavy rain, or through standing water with competition oriented tires may cause hydroplaning and loss of control. Use extreme caution and drive slowly on wet roads.

⚠ Warning

Driving with competition oriented tires on snow, ice, or cold road surfaces can cause loss of control or an accident. Competition oriented tires are summer season tires and are not intended to be driven on snow, ice, or road surfaces below 10°C (50°F). Do not drive a vehicle with competition oriented tires in these conditions.

⚠ Caution

Competition oriented tires have rubber compounds that lose flexibility and may develop surface cracks in the tread area at temperatures below -7°C (20°F). Always store competition oriented tires indoors and at temperatures above -7°C (20°F)

(Continued)

Caution (Continued)

when not in use. If the tires have been subjected to -7°C (20°F) or less, let them warm up in a heated space to at least 10°C (50°F) for 24 hours or more before being installed or driving a vehicle on which they are installed. Do not apply heat or blow heated air directly on the tires. Always inspect tires before use. See *Tire Inspection on page 10-61*.

Summer Tires

High Performance Summer Tires

This vehicle may come with high performance summer tires. These tires have a special tread and compound that are optimized for maximum dry and wet road performance. This special tread and compound will have decreased performance in cold climates, and on ice and snow. We recommend installing winter tires on the vehicle if frequent driving at temperatures below approximately 5°C (40°F) or on ice or snow covered roads is expected. See *Winter Tires on page 10-47*.

⚠ Caution

High performance summer tires have rubber compounds that lose flexibility and may develop surface cracks in the tread area at temperatures below -7°C (20°F). Always store high performance summer tires indoors and at temperatures above -7°C (20°F) when not in use. If the tires have been subjected to -7°C (20°F) or less, let them warm up in a heated space to at least 5°C (40°F) for 24 hours or more before being installed or driving a vehicle on which they are installed. Do not apply heat or blow heated air

(Continued)

Caution (Continued)

directly on the tires. Always inspect tires before use. See *Tire Inspection on page 10-61*.

Tire Sidewall Labeling

Useful information about a tire is molded into its sidewall. The examples show a typical passenger tire sidewall.

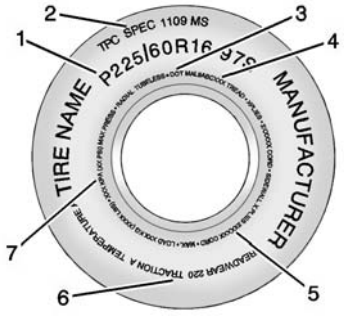

Passenger (P-Metric) Tire Example

(1) Tire Size: The tire size is a combination of letters and numbers used to define a particular tire's width, height, aspect ratio, construction type, and service description. See the “Tire Size” illustration later in this section for more detail.

(2) TPC Spec (Tire Performance Criteria Specification): Original equipment tires designed to GM's specific tire performance criteria have a TPC specification code molded onto the sidewall. GM's TPC specifications meet or exceed all federal safety guidelines.

(3) DOT (Department of Transportation): The Department of Transportation (DOT) code indicates that the tire is in compliance with the U.S. Department of Transportation Motor Vehicle Safety Standards.

DOT Tire Date of Manufacture: The last four digits of the TIN indicate the tire manufactured date. The first two digits represent the week (01-52) and the last two digits, the year. For example, the third week of the year 2010 would have a four-digit DOT date of 0310.

(4) Tire Identification Number (TIN): The letters and numbers following the DOT code are the Tire Identification Number (TIN). The TIN shows the manufacturer and plant code, tire size, and date the tire was manufactured. The TIN is molded onto both sides of the tire, although only one side may have the date of manufacture.

(5) Tire Ply Material: The type of cord and number of plies in the sidewall and under the tread.

(6) Uniform Tire Quality Grading (UTQG): Tire manufacturers are required to grade tires based on three performance factors: treadwear, traction, and temperature resistance. For more information see *Uniform Tire Quality Grading on page 10-65*.

(7) Maximum Cold Inflation Load Limit: Maximum load that can be carried and the maximum pressure needed to support that load.

Tire Designations

Tire Size

The following is an example of a typical passenger vehicle tire size.

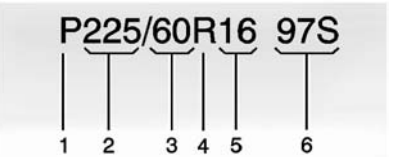

(1) Passenger (P-Metric) Tire: The United States version of a metric tire sizing system. The letter P as the first character in the tire size means a passenger vehicle tire engineered to standards set by the U.S. Tire and Rim Association.

(2) Tire Width: The three-digit number indicates the tire section width in millimeters from sidewall to sidewall.

(3) Aspect Ratio: A two-digit number that indicates the tire height-to-width measurements. For example, if the tire size aspect ratio is 60, as shown in item 3 of the illustration, it would mean that the tire's sidewall is 60 percent as high as it is wide.

(4) Construction Code: A letter code is used to indicate the type of ply construction in the tire. The letter R means radial ply construction; the letter D means diagonal or bias ply construction; and the letter B means belted-bias ply construction.

(5) Rim Diameter: Diameter of the wheel in inches.

(6) Service Description: These characters represent the load index and speed rating of the tire. The load index represents the load carrying capacity a tire is certified to carry. The speed rating is the maximum speed a tire is certified to carry a load.

Tire Terminology and Definitions

Air Pressure: The amount of air inside the tire pressing outward on each square inch of the tire. Air pressure is expressed in kPa (kilopascal) or psi (pounds per square inch).

Accessory Weight: The combined weight of optional accessories. Some examples of optional accessories are automatic transmission, power windows, power seats, and air conditioning.

Aspect Ratio: The relationship of a tire's height to its width.

Belt: A rubber coated layer of cords between the plies and the tread. Cords may be made from steel or other reinforcing materials.

Bead: The tire bead contains steel wires wrapped by steel cords that hold the tire onto the rim.

Bias Ply Tire: A pneumatic tire in which the plies are laid at alternate angles less than 90 degrees to the centerline of the tread.

Cold Tire Pressure: The amount of air pressure in a tire, measured in kPa (kilopascal) or psi (pounds per square inch) before a tire has built up heat from driving. See *Tire Pressure on page 10-55*.

Curb Weight: The weight of a motor vehicle with standard and optional equipment including the maximum capacity of fuel, oil, and coolant, but without passengers and cargo.

DOT Markings: A code molded into the sidewall of a tire signifying that the tire is in compliance with the U.S. Department of Transportation (DOT) Motor Vehicle Safety Standards. The DOT code includes the Tire Identification Number (TIN), an alphanumeric designator which can also identify the tire manufacturer, production plant, brand, and date of production.

GVWR: Gross Vehicle Weight Rating. See *Vehicle Load Limits on page 9-14*.

GAWR FRT: Gross Axle Weight Rating for the front axle. See *Vehicle Load Limits on page 9-14*.

GAWR RR: Gross Axle Weight Rating for the rear axle. See *Vehicle Load Limits on page 9-14*.

Intended Outboard Sidewall: The side of an asymmetrical tire that must always face outward when mounted on a vehicle.

Kilopascal (kPa): The metric unit for air pressure.

Light Truck (LT-Metric) Tire: A tire used on light duty trucks and some multipurpose passenger vehicles.

Load Index: An assigned number ranging from 1 to 279 that corresponds to the load carrying capacity of a tire.

Maximum Inflation Pressure: The maximum air pressure to which a cold tire can be inflated. The maximum air pressure is molded onto the sidewall.

Maximum Load Rating: The load rating for a tire at the maximum permissible inflation pressure for that tire.

Maximum Loaded Vehicle Weight: The sum of curb weight, accessory weight, vehicle capacity weight, and production options weight.

Normal Occupant Weight: The number of occupants a vehicle is designed to seat multiplied by 68 kg (150 lb). See *Vehicle Load Limits on page 9-14*.

Occupant Distribution: Designated seating positions.

Outward Facing Sidewall: The side of an asymmetrical tire that has a particular side that faces outward when mounted on a vehicle. The side of the tire that contains a whitewall, bears white lettering, or bears manufacturer, brand, and/or model name molding that is higher or deeper than the same moldings on the other sidewall of the tire.

Passenger (P-Metric) Tire: A tire used on passenger cars and some light duty trucks and multipurpose vehicles.

Recommended Inflation Pressure: Vehicle manufacturer's recommended tire inflation pressure as shown on the tire placard. See *Tire Pressure on page 10-55* and *Vehicle Load Limits on page 9-14*.

Radial Ply Tire: A pneumatic tire in which the ply cords that extend to the beads are laid at 90 degrees to the centerline of the tread.

Rim: A metal support for a tire and upon which the tire beads are seated.

Sidewall: The portion of a tire between the tread and the bead.

Speed Rating: An alphanumeric code assigned to a tire indicating the maximum speed at which a tire can operate.

Traction: The friction between the tire and the road surface. The amount of grip provided.

Tread: The portion of a tire that comes into contact with the road.

Treadwear Indicators: Narrow bands, sometimes called wear bars, that show across the tread of a tire when only 1.6 mm (1/16 in) of tread remains. See *When It Is Time for New Tires on page 10-62*.

UTQGS (Uniform Tire Quality Grading Standards): A tire information system that provides consumers with ratings for a tire's traction, temperature, and treadwear. Ratings are determined by tire manufacturers using government testing procedures. The ratings are molded into the sidewall of the tire. See *Uniform Tire Quality Grading on page 10-65*.

Vehicle Capacity Weight: The number of designated seating positions multiplied by 68 kg (150 lb) plus the rated cargo load. See *Vehicle Load Limits on page 9-14*.

Vehicle Maximum Load on the Tire: Load on an individual tire due to curb weight, accessory weight, occupant weight, and cargo weight.

Vehicle Placard: A label permanently attached to a vehicle showing the vehicle capacity weight and the original equipment tire size and recommended inflation pressure. See “Tire and Loading Information Label” under *Vehicle Load Limits on page 9-14*.

Tire Pressure

Tires need the correct amount of air pressure to operate effectively.

⚠ Caution

Neither tire underinflation nor overinflation is good. Underinflated tires, or tires that do not have enough air, can result in:

- Tire overloading and overheating which could lead to a blowout.
- Premature or irregular wear.
- Poor handling.
- Reduced fuel economy.

Overinflated tires, or tires that have too much air, can result in:

- Unusual wear.
- Poor handling.
- Rough ride.
- Needless damage from road hazards.

The Tire and Loading Information label on the vehicle indicates the original equipment tires and the correct cold tire inflation pressures. The recommended pressure is the minimum air pressure needed to support the vehicle's maximum load carrying capacity.

For additional information regarding how much weight the vehicle can carry, and an example of the Tire and Loading Information label, see *Vehicle Load Limits on page 9-14*. How the vehicle is loaded affects vehicle handling and ride comfort. Never load the vehicle with more weight than it was designed to carry.

When to Check

Check the tires once a month or more.

How to Check

Use a good quality pocket-type gauge to check the tire pressure. Proper tire inflation cannot be determined by looking at the tire. Check the tire inflation pressure when the tires are cold, meaning the vehicle has not been driven for at least three hours or no more than 1.6 km (1 mi).

Remove the valve cap from the tire valve stem. Press the tire gauge firmly onto the valve to get the pressure measurement. If the cold tire inflation pressure matches the recommended pressure on the Tire and Loading Information label, no further adjustment is necessary.

If the inflation pressure is low, add air until the recommended pressure is reached. If the inflation pressure in high, press on the metal stem in the center

of the tire valve to release air. Re-check the tire pressure with the tire gauge.

Return the valve caps on the valve stems to keep out dirt and moisture and prevent leaks.

Tire Pressure for High-Speed Operation

⚠ Warning

Driving at high speeds, 160 km/h (100 mph) or higher, puts an additional strain on tires. Sustained high-speed driving causes excessive heat buildup and can cause sudden tire failure. You could have a crash and you or others could be killed. Some high-speed rated tires require inflation pressure adjustment for high-speed operation. When speed limits and road conditions are such that a vehicle can be

(Continued)

Warning (Continued)

driven at high speeds, make sure the tires are rated for high-speed operation, in excellent condition, and set to the correct cold tire inflation pressure for the vehicle load.

The tires require inflation pressure adjustment when driving the vehicle at speeds of 160 km/h (100 mph) or higher, where it is legal. Set the cold inflation pressure to the maximum inflation pressure shown on the tire sidewall, or 265 kPa (38 psi), whichever is lower. See the example following. Return the tires to the recommended cold tire inflation pressure when high-speed driving has ended. See *Vehicle Load Limits on page 9-14*.

Example:

The maximum load and inflation pressure molded on the tire sidewall, in small letters, near the rim flange. It will read something like this: Maximum load
690 kg (1521 lbs) 300 kPa (44 psi) Max. Press.

For this example, set the inflation pressure for high-speed driving at 265 kPa (38 psi).

Racing or other competitive driving may affect the warranty coverage of the vehicle. See the warranty booklet for more information.

Tire Pressure Monitor System

The Tire Pressure Monitor System (TPMS) uses radio and sensor technology to check tire pressure levels. The TPMS sensors monitor the air pressure in your tires and transmit tire pressure readings to a receiver located in the vehicle.

Each tire, including the spare (if provided), should be checked monthly when cold and inflated to the inflation pressure recommended by the vehicle manufacturer on the

vehicle placard or tire inflation pressure label. (If your vehicle has tires of a different size than the size indicated on the vehicle placard or tire inflation pressure label, you should determine the proper tire inflation pressure for those tires.)

As an added safety feature, your vehicle has been equipped with a tire pressure monitoring system (TPMS) that illuminates a low tire pressure telltale when one or more of your tires is significantly under-inflated.

Accordingly, when the low tire pressure telltale illuminates, you should stop and check your tires as soon as possible, and inflate them to the proper pressure. Driving on a significantly under-inflated tire causes the tire to overheat and can lead to tire failure. Under-inflation also reduces fuel efficiency and tire tread life, and may affect the vehicle's handling and stopping ability.

Please note that the TPMS is not a substitute for proper tire maintenance, and it is the driver's responsibility to maintain correct tire pressure, even if under-inflation has not reached the level to trigger illumination of the TPMS low tire pressure telltale.

Your vehicle has also been equipped with a TPMS malfunction indicator to indicate when the system is not operating properly. The TPMS malfunction indicator is combined with the low tire pressure telltale. When the system detects a malfunction, the telltale will flash for approximately one minute and then remain continuously illuminated. This sequence will continue upon subsequent vehicle start-ups as long as the malfunction exists.

When the malfunction indicator is illuminated, the system may not be able to detect or signal low tire pressure as intended. TPMS malfunctions may occur for a variety of reasons, including the installation of replacement or alternate tires or wheels on the vehicle that prevent the TPMS from functioning properly. Always check the TPMS malfunction telltale after replacing one or more tires or wheels on your vehicle to ensure that the replacement or alternate tires and wheels allow the TPMS to continue to function properly.

See *Tire Pressure Monitor Operation on page 10-58*.

See *Radio Frequency Statement on page 13-12*.

Tire Pressure Monitor Operation

This vehicle may have a Tire Pressure Monitor System (TPMS). The TPMS is designed to warn the driver when a low tire pressure condition exists. TPMS sensors are mounted onto each tire and wheel assembly on your vehicle. The TPMS sensors monitor the air pressure in the tires and transmits the tire pressure readings to a receiver located in the vehicle.

When a low tire pressure condition is detected, the TPMS illuminates the low tire pressure warning light, located in the instrument cluster. If the warning light comes on, stop as soon as possible and inflate the tires to the recommended pressure shown on the tire loading information label. See *Vehicle Load Limits on page 9-14*.

A message to check the pressure in a specific tire displays in the Driver Information Center (DIC). The low tire pressure warning light and the DIC warning message appear at each ignition cycle until the tires are inflated to the correct inflation pressure. Using the DIC, tire pressure levels can be viewed. For additional information and details about the DIC operation and displays see *Driver Information Center (DIC) on page 5-26* and *Tire Messages on page 5-43*.

The low tire pressure warning light may come on in cool weather when the vehicle is first started, and then turn off as the vehicle is driven. This could be an early indicator that the air pressure is getting low and needs to be inflated to the proper pressure.

A Tire and Loading Information label shows the size of the original equipment tires and the correct inflation pressure for the tires when they are cold. See *Vehicle Load Limits on page 9-14*, for an example of the Tire and Loading Information label and its location. Also see *Tire Pressure on page 10-55* for additional information.

The TPMS can warn about a low tire pressure condition but it does not replace normal tire maintenance. See *Tire Inspection on page 10-61*, *Tire Rotation on page 10-61*, *When It Is Time for New Tires on page 10-62*, and *Tires on page 10-46*.

⚠ Caution

Tire sealant materials are not all the same. A non-approved tire sealant could damage the TPMS sensors. TPMS sensor damage caused by using an incorrect tire sealant is not covered by the vehicle warranty. Always use only the GM approved tire sealant available through your dealer or included in the vehicle.

Factory-installed Tire Inflator Kits use a GM approved liquid tire sealant. Using non-approved tire sealants could damage the TPMS sensors. See *Tire Sealant and Compressor Kit on page 10-70* for information regarding the inflator kit materials and instructions.

TPMS Malfunction Light and Message

The TPMS will not function properly if one or more of the TPMS sensors are missing or inoperable. When the system detects a malfunction, the low tire warning light flashes for about one minute and then stays on for the remainder of the ignition cycle. A DIC warning message also displays. The malfunction light and DIC warning message come on at each ignition cycle until the problem is corrected. Some of the conditions that can cause these to come on are:

- The TPMS sensor matching process was not done or not completed successfully. The malfunction light and the DIC message should go off after successfully completing the sensor matching process.
- One or more TPMS sensors are missing or damaged. The malfunction light and the DIC message should go off when the TPMS sensors are installed and the sensor matching process is performed successfully.
- Replacement tires or wheels do not match the original equipment tires or wheels. Tires and wheels other than those recommended could prevent the TPMS from functioning properly. See *Buying New Tires on page 10-63*.
- Operating electronic devices or being near facilities using radio wave frequencies similar to the TPMS could cause the TPMS sensors to malfunction.

If the TPMS is not functioning properly, it cannot detect or signal a low tire condition. See your dealer for service if the TPMS malfunction light and DIC message come on and stays on.

TPMS Sensor Matching Process — Auto Learn Function

Each TPMS sensor has a unique identification code. The identification code needs to be matched to a new tire/wheel position after rotating the tires or replacing one or more of the TPMS sensors. When a tire is installed, the vehicle must be stationary for about 20 minutes before the system recalculates. The following relearn process takes up to 10 minutes, driving at a minimum speed of 19 km/h (12 mph).
A dash (-) or pressure value will display in the DIC. See *Driver Information Center (DIC) on page 5-26* and *Tire Messages on page 5-43*. A warning message displays in the DIC if a problem occurs during the relearn process.

Tire Inspection

We recommend that the tires, including the spare tire, if the vehicle has one, be inspected for signs of wear or damage at least once a month.

Replace the tire if:

- The indicators at three or more places around the tire can be seen.
- There is cord or fabric showing through the tire's rubber.
- The tread or sidewall is cracked, cut, or snagged deep enough to show cord or fabric.
- The tire has a bump, bulge, or split.
- The tire has a puncture, cut, or other damage that cannot be repaired well because of the size or location of the damage.

Tire Rotation

The tires should be rotated every 12 000 km/7,500 mi. See *Maintenance Schedule on page 11-2*.

Tires are rotated to achieve uniform wear for all tires. The first rotation is the most important.

Anytime unusual wear is noticed, rotate the tires as soon as possible, check for proper tire inflation pressure, and check for damaged tires or wheels. If the unusual wear continues after the rotation, check the wheel alignment. See *When It Is Time for New Tires on page 10-62* and *Wheel Replacement on page 10-67*.

Different tire sizes should not be rotated front to rear.

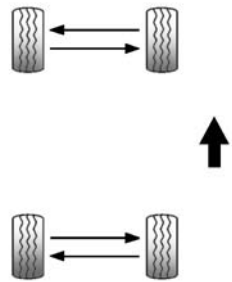

Use this rotation pattern if the vehicle has different size tires on the front and rear.

Adjust the front and rear tires to the recommended inflation pressure on the Tire and Loading Information label after

the tires have been rotated. See *Tire Pressure on page 10-55* and *Vehicle Load Limits on page 9-14*.

Reset the Tire Pressure Monitor System. See *Tire Pressure Monitor Operation on page 10-58*.

Check that all wheel nuts are properly tightened. See “Wheel Nut Torque” under *Capacities and Specifications on page 12-2*.

⚠ Warning

Rust or dirt on a wheel, or on the parts to which it is fastened, can make wheel nuts become loose after time. The wheel could come off and cause an accident. When changing a wheel, remove any rust or dirt from places where the wheel attaches to the vehicle. In

(Continued)

Warning (Continued)

an emergency, a cloth or a paper towel can be used; however, use a scraper or wire brush later to remove all rust or dirt.

Lightly coat the center of the wheel hub with wheel bearing grease after a wheel change or tire rotation to prevent corrosion or rust build-up. Do not get grease on the flat wheel mounting surface or on the wheel nuts or bolts.

When It Is Time for New Tires

Factors such as maintenance, temperatures, driving speeds, vehicle loading, and road conditions affect the wear rate of the tires.

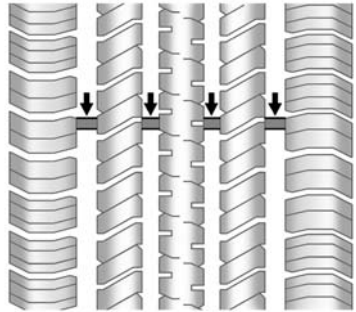

Treadwear indicators are one way to tell when it is time for new tires. Treadwear indicators appear when the tires have only 1.6 mm (1/16 in) or less of tread remaining. See *Tire Inspection on page 10-61* and *Tire Rotation on page 10-61*.

The rubber in tires ages over time. This also applies to the spare tire, if the vehicle has one, even if it is never used. Multiple factors including temperatures, loading conditions, and inflation pressure maintenance affect how fast aging takes place. GM recommends that tires, including the spare if

equipped, be replaced after six years, regardless of tread wear. The tire manufacture date is the last four digits of the DOT Tire Identification Number (TIN) which is molded into one side of the tire sidewall. The first two digits represent the week (01–52) and the last two digits, the year. For example, the third week of the year 2010 would have a four-digit DOT date of 0310.

Vehicle Storage

Tires age when stored normally mounted on a parked vehicle. Park a vehicle that will be stored for at least a month in a cool, dry, clean area away from direct sunlight to slow aging. This area should be free of grease, gasoline, or other substances that can deteriorate rubber.

Parking for an extended period can cause flat spots on the tires that may result in vibrations while driving. When storing a vehicle for at least a month, remove the tires or raise the vehicle to reduce the weight from the tires.

Buying New Tires

GM has developed and matched specific tires for the vehicle. The original equipment tires installed were designed to meet General Motors Tire Performance Criteria Specification (TPC Spec) system rating. When replacement tires are needed, GM strongly recommends buying tires with the same TPC Spec rating.

GM's exclusive TPC Spec system considers over a dozen critical specifications that impact the overall performance of the vehicle, including brake system performance, ride and handling, traction control, and tire pressure monitoring performance. GM's TPC Spec number is molded onto the tire's sidewall near the tire size. If the tires have an all-season tread design, the TPC Spec number will be followed by MS for mud and snow. See *Tire Sidewall Labeling on page 10-51*, for additional information.

GM recommends replacing worn tires in complete sets of four. Uniform tread depth on all tires will help to maintain the performance of the vehicle. Braking and handling performance may be adversely affected if all the tires are not replaced at the same time. If proper rotation and maintenance have been done, all four tires should wear out at about the same time. See *Tire Rotation on page 10-61* for information on proper tire rotation. However, if it is

necessary to replace only one axle set of worn tires, place the new tires on the rear axle.

Winter tires with the same speed rating as the original equipment tires may not be available for H, V, W, and ZR speed rated tires. Never exceed the winter tire's maximum speed capability when using winter tires with a lower speed rating.

⚠ Warning

Tires could explode during improper service. Attempting to mount or dismount a tire could cause injury or death. Only your dealer or authorized tire service center should mount or dismount the tires.

⚠ Warning

Mixing tires of different sizes (other than those originally installed on the vehicle), brands, or types may cause loss of control of the vehicle, resulting in a crash or other vehicle damage. Use the correct size, brand, and type of tire on all four wheels.

⚠ Warning

Using bias-ply tires on the vehicle may cause the wheel rim flanges to develop cracks after many miles of driving. A tire and/or wheel could fail suddenly and cause a crash. Use only radial-ply tires with the wheels on the vehicle.

If the vehicle tires must be replaced with a tire that does not have a TPC Spec number, make sure they are the same size, load range, speed rating, and construction (radial) as the original tires.

Vehicles that have a tire pressure monitoring system could give an inaccurate low-pressure warning if non-TPC Spec rated tires are installed. See *Tire Pressure Monitor Operation on page 10-58*.

The Tire and Loading Information label indicates the original equipment tires on the vehicle. See *Vehicle Load Limits on page 9-14*, for the label location and more information about the Tire and Loading Information label.

Different Size Tires and Wheels

If wheels or tires are installed that are a different size than the original equipment wheels and tires, vehicle performance, including its braking, ride and handling characteristics, stability, and resistance to rollover may be affected. If the vehicle has electronic systems such as antilock brakes, rollover airbags, traction control, electronic stability control, or All-Wheel Drive, the performance of these systems can also be affected.

⚠ Warning

If different sized wheels are used, there may not be an acceptable level of performance and safety if tires not recommended for those wheels are selected. This increases the chance of a crash and serious injury. Only use GM

(Continued)

Warning (Continued)

specific wheel and tire systems developed for the vehicle, and have them properly installed by a GM certified technician.

See *Buying New Tires on page 10-63* and *Accessories and Modifications on page 10-2*.

Uniform Tire Quality Grading

Quality grades can be found where applicable on the tire sidewall between tread shoulder and maximum section width. For example:

Treadwear 200 Traction AA Temperature A

The following information relates to the system developed by the United States National Highway Traffic Safety Administration (NHTSA), which grades tires by treadwear, traction, and temperature performance. This applies only to vehicles sold in the United States. The grades are molded on the sidewalls of most passenger car tires. The Uniform Tire Quality Grading (UTQG) system does not apply to deep tread, winter tires, compact spare tires, tires with nominal rim diameters of 10 to 12 inches (25 to 30 cm), or to some limited-production tires.

While the tires available on General Motors passenger cars and light trucks may vary with respect to these grades, they must also conform to federal safety requirements and additional General Motors Tire Performance Criteria (TPC) standards.

All Passenger Car Tires Must Conform to Federal Safety Requirements In Addition To These Grades.

Treadwear

The treadwear grade is a comparative rating based on the wear rate of the tire when tested under controlled conditions on a specified government test course. For example, a tire graded 150 would wear one and one-half (1½) times as well on the government course as a tire graded 100. The relative performance of tires depends upon the actual conditions of their use, however, and may depart significantly from the norm due to variations in driving habits, service practices and differences in road characteristics and climate.

Traction

The traction grades, from highest to lowest, are AA, A, B, and C. Those grades represent the tire's ability to stop on wet pavement as measured under controlled conditions on specified government test surfaces of asphalt and concrete. A tire marked C may have poor traction performance. Warning: The traction grade assigned to this tire is based on straight-ahead braking traction tests, and does not include acceleration, cornering, hydroplaning, or peak traction characteristics.

Temperature

The temperature grades are A (the highest), B, and C, representing the tire's resistance to the generation of heat and its ability to dissipate heat when tested under controlled conditions on a specified indoor laboratory test wheel. Sustained high temperature can cause the material of the tire to degenerate and reduce tire life, and excessive temperature can lead to sudden tire failure. The grade C corresponds to a level of performance which all passenger car tires must meet under the Federal Motor Safety Standard No. 109. Grades B and A represent higher levels of performance on the laboratory test wheel than the minimum required by law. Warning: The temperature grade for this tire is established for a tire that is properly inflated and not overloaded. Excessive speed, underinflation, or excessive loading, either separately or in combination, can cause heat buildup and possible tire failure.

Wheel Alignment and Tire Balance

The tires and wheels were aligned and balanced at the factory to provide the longest tire life and best overall performance. Adjustments to wheel alignment and tire balancing are not necessary on a regular basis. Consider an alignment check if there is unusual tire wear. If the vehicle is vibrating when driving on a smooth road, the tires and wheels may need to be rebalanced. See your dealer for proper diagnosis.

Road Imperfections/Crown Effects

The vehicle's precise steering and handling make it very responsive to road surface feedback. A slight pull may be felt in the steering depending on the crown of the road and/or other road surface variations such as troughs or ruts. This is normal and the vehicle does not require service.

Tire Chatter/Hop

When driving at slow speeds and in very tight turns, the vehicle may have tire chatter/hop. This is normal and the vehicle does not require service.

Wheel Replacement

Replace any wheel that is bent, cracked, or badly rusted or corroded. If wheel nuts keep coming loose, the wheel, wheel bolts, and wheel nuts should be replaced. If the wheel leaks air, replace it. Some aluminum wheels can be repaired. See your dealer if any of these conditions exist.

Your dealer will know the kind of wheel that is needed.

Each new wheel should have the same load-carrying capacity, diameter, width, offset, and be mounted the same way as the one it replaces.

Replace wheels, wheel bolts, or wheel nuts with new GM original equipment parts.

⚠ Warning

Using the wrong replacement wheels, wheel bolts, or wheel nuts can be dangerous. It could affect the braking and handling of the vehicle. Tires can lose air, and cause loss of control, causing a crash. Always use the correct wheel, wheel bolts, and wheel nuts for replacement.

⚠ Warning

Replacing a wheel with a used one is dangerous. How it has been used or how far it has been driven may be unknown. It could fail suddenly and cause a crash. When replacing wheels, use a new GM original equipment wheel.

⚠ Caution

The wrong wheel can also cause problems with bearing life, brake cooling, speedometer or odometer calibration, headlamp aim, bumper height, vehicle ground clearance, and tire clearance to the body and chassis.

Tightening Wheel Lug Nuts

⚠ Warning

Never use oil or grease on studs or the threads of the wheel nuts. The wheel nuts might come loose and the wheel could fall off, causing a crash.

⚠ Warning

Incorrect wheel nuts or improperly tightened wheel nuts can cause the wheel to become loose and even come off. This could lead to a crash. Be sure to use the correct wheel nuts. If you have to replace them, be sure to get new GM original equipment wheel nuts.

⚠ Caution

Improperly tightened wheel nuts can lead to brake pulsation and rotor damage. To avoid expensive brake repairs, evenly tighten the wheel nuts in the proper sequence and to the proper torque specification.

Tighten the wheel lug nuts firmly in a crisscross sequence. See *Capacities and Specifications on page 12-2*.

Tire Chains

⚠ Warning

Do not use tire chains. There is not enough clearance. Tire chains used on a vehicle without the proper amount of clearance can cause damage to the brakes,

(Continued)

Warning (Continued)

suspension, or other vehicle parts. The area damaged by the tire chains could cause loss of control and a crash. Use another type of traction device only if its manufacturer recommends it for the vehicle's tire size combination and road conditions. Follow that manufacturer's instructions. To avoid vehicle damage, drive slowly and readjust or remove the traction device if it contacts the vehicle. Do not spin the wheels. If traction devices are used, install them on the rear tires.

If a Tire Goes Flat

It is unusual for a tire to blow out while driving, especially if the tires are maintained properly. If air goes out of a tire, it is much more likely to leak out slowly. See *Tires on page 10-46* for additional information. But if there ever is a blowout, here are a few tips about what to expect and what to do:

If a front tire fails, the flat tire creates a drag that pulls the vehicle toward that side. Take your foot off the accelerator pedal and grip the steering wheel firmly. Steer to maintain lane position, and then gently brake to a stop, well off the road, if possible.

A rear blowout, particularly on a curve, acts much like a skid and may require the same correction as used in a skid. Stop pressing the accelerator pedal and steer to straighten the vehicle. It may be very bumpy and noisy. Gently brake to a stop, well off the road, if possible.

The vehicle has no spare tire, no tire changing equipment, and no place to store a tire.

If the vehicle has run-flat tires, there is no need to stop on the side of the road to change a flat tire. See *Run-Flat Tires on page 10-48*.

⚠ Warning

Special tools and procedures are required to service a run-flat tire. If these special tools and procedures are not used, injury or vehicle damage may occur. Always be sure the proper tools and procedures, as described in the service manual, are used.

If this vehicle does not have run-flat tires and a tire goes flat, avoid further tire and wheel damage by driving slowly to a level place, well off the road, if possible. Turn on the hazard warning flashers. See *Hazard Warning Flashers on page 6-4*.

1. Turn on the hazard warning flashers.
2. Set the parking brake firmly.
3. Put an automatic transmission in P (Park) or a manual transmission in 1 (First) or R (Reverse).
4. Turn off the ignition.
5. Inspect the flat tire.

⚠ Warning

Driving on a flat tire will cause permanent damage to the tire. Re-inflating a tire after it has been driven on while severely underinflated or flat may cause a blowout and a serious crash. Never attempt to re-inflate a tire that has been driven on while severely underinflated or flat. Have your dealer or an authorized tire service center repair or replace the flat tire as soon as possible.

If this vehicle has a tire sealant kit and the tire has been separated from the wheel, has damaged sidewalls, or has a puncture larger than 6 mm (0.25 in), the tire is too severely damaged for the tire sealant and compressor kit to be effective. If the tire has a puncture less than 6 mm (0.25 in) in the tread area of the tire, see *Tire Sealant and Compressor Kit on page 10-70*.

Tire Sealant and Compressor Kit

⚠ Warning

Idling a vehicle in an enclosed area with poor ventilation is dangerous. Engine exhaust may enter the vehicle. Engine exhaust contains carbon monoxide (CO) which cannot be seen or smelled. It can cause unconsciousness and even death. Never run the engine in an enclosed area that

(Continued)

Warning (Continued)

has no fresh air ventilation. For more information, see *Engine Exhaust on page 9-26*.

⚠ Warning

Overinflating a tire could cause the tire to rupture and you or others could be injured. Be sure to read and follow the tire sealant and compressor kit instructions and inflate the tire to its recommended pressure. Do not exceed the recommended pressure.

⚠ Warning

Storing the tire sealant and compressor kit or other equipment in the passenger compartment of the vehicle could cause injury. In a sudden stop or collision, loose equipment could strike someone. Store the tire sealant and compressor kit in its original location.

If this vehicle has a tire sealant and compressor kit, there may not be a spare tire or tire changing equipment, and on some vehicles there may not be a place to store a tire.

To obtain a tire sealant and compressor kit, see your dealer.

The tire sealant and compressor can be used to temporarily seal punctures up to 6 mm (0.25 in) in the tread area of the tire. It can also be used to inflate an underinflated tire.

If the tire has been separated from the wheel, has damaged sidewalls, or has a large puncture, the tire is too severely damaged for the tire sealant and compressor kit to be effective. See *Roadside Assistance Program on page 13-5*.

Read and follow all of the tire sealant and compressor kit instructions.

The kit includes:

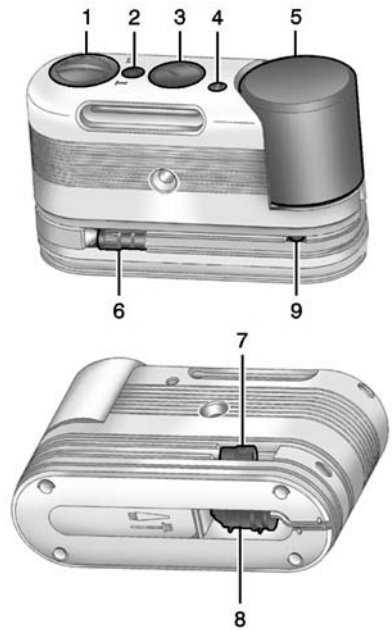

1. Selector Switch (Sealant/Air or Air Only)
2. On/Off Button
3. Pressure Gauge
4. Pressure Deflation Button
5. Tire Sealant Canister
6. Sealant/Air Hose (Clear)
7. Air Only Hose (Black)
8. Power Plug
9. Canister Release Button (Under Sealant/Air Hose)

Tire Sealant

Read and follow the safe handling instructions on the label adhered to the sealant canister.

Check the tire sealant expiration date on the sealant canister. The sealant canister should be replaced before its expiration date. Replacement sealant canisters are available at your local dealer. See “Removal and Installation of the Sealant Canister” following.

There is only enough sealant to seal one tire. After usage, the sealant canister and sealant/air hose assembly must be replaced. See “Removal and Installation of the Sealant Canister” following.

Using the Tire Sealant and Compressor Kit to Temporarily Seal and Inflate a Punctured Tire

Follow the directions closely for correct sealant usage.

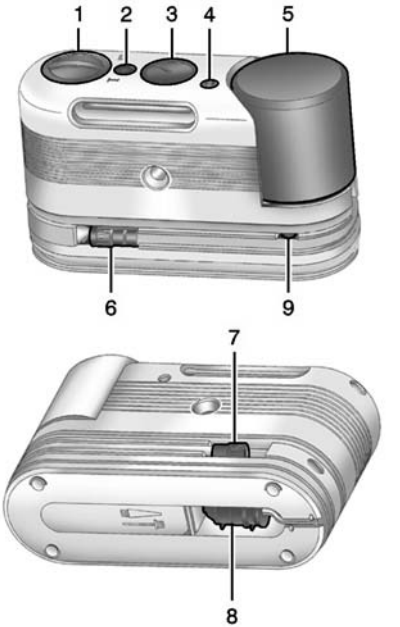

1. Selector Switch (Sealant/Air or Air Only)
2. On/Off Button

3. Pressure Gauge
4. Pressure Deflation Button
5. Tire Sealant Canister
6. Sealant/Air Hose (Clear)
7. Air Only Hose (Black)
8. Power Plug
9. Canister Release Button (Under Sealant/Air Hose)

When using the tire sealant and compressor kit during cold temperatures, warm the kit in a heated environment for five minutes. This will help to inflate the tire faster.

If a tire goes flat, avoid further tire and wheel damage by driving slowly to a level place. Turn on the hazard warning flashers. See *Hazard Warning Flashers on page 6-4*.

See *If a Tire Goes Flat on page 10-69* for other important safety warnings.

Do not remove any objects that have penetrated the tire.

1. Remove the tire sealant and compressor kit from its storage location. See *Storing the Tire Sealant and Compressor Kit on page 10-78*.
2. Unwrap the sealant/air hose (6) and the power plug (8).
3. Place the kit on the ground.

   Make sure the tire valve stem is positioned close to the ground so the hose will reach it.
4. Remove the valve stem cap from the flat tire by turning it counterclockwise.
5. Attach the sealant/air hose (6) onto the tire valve stem. Turn it clockwise until it is tight.
6. Plug the power plug (8) into the accessory power outlet in the vehicle. Unplug all items from other accessory power outlets. See *Power Outlets on page 5-4*.

   If the vehicle has an accessory power outlet, do not use the cigarette lighter.

   If the vehicle only has a cigarette lighter, use the cigarette lighter.

   Do not pinch the power plug cord in the door or window.
7. Start the vehicle. The vehicle must be running while using the air compressor.
8. Press and turn the selector switch (1) counterclockwise to the Sealant + Air position.

9. Press the on/off button (2) to turn the tire sealant and compressor kit on.

   The compressor will inject sealant and air into the tire.

   The pressure gauge (3) will initially show a high pressure while the compressor pushes the sealant into the tire. Once the sealant is completely dispersed into the tire, the pressure will quickly drop and start to rise again as the tire inflates with air only.

10. Inflate the tire to the recommended inflation pressure using the pressure gauge (3). The recommended inflation pressure can be found on the Tire and Loading Information label. See *Tire Pressure on page 10-55*.

    The pressure gauge (3) may read higher than the actual tire pressure while the compressor is on. Turn the compressor off to get an accurate reading. The compressor may be turned on/off until the correct pressure is reached.

⚠ Caution

If the recommended pressure cannot be reached after approximately 25 minutes, the vehicle should not be driven farther. The tire is too severely damaged and the tire sealant and compressor kit cannot inflate the tire. Remove the power plug from the accessory power outlet and unscrew the inflating hose from the tire valve. See *Roadside Assistance Program on page 13-5*.

11. Press the on/off button (2) to turn the tire sealant and compressor kit off.

    The tire is not sealed and will continue to leak air until the vehicle is driven and the sealant is distributed in the tire, therefore, Steps 12–18 must be done immediately after Step 11.

    Be careful while handling the tire sealant and compressor kit as it could be warm after usage.

12. Unplug the power plug (8) from the accessory power outlet in the vehicle.

13. Turn the sealant/air hose (6) counterclockwise to remove it from the tire valve stem.

14. Replace the tire valve stem cap.

15. Replace the sealant/air hose (6), and the power plug (8) back in their original location.

16. If the flat tire was able to inflate to the recommended inflation pressure, remove the maximum speed label from the sealant canister (5) and place it in a highly visible location. Do not exceed the speed on this label until the damaged tire is repaired or replaced.
17. Return the equipment to its original storage location in the vehicle.
18. Immediately drive the vehicle 8 km (5 mi) to distribute the sealant in the tire.
19. Stop at a safe location and check the tire pressure. Refer to Steps 1–11 under “Using the Tire Sealant and Compressor Kit without Sealant to Inflate a Tire (Not Punctured).”

    If the tire pressure has fallen more than 68 kPa (10 psi) below the recommended inflation pressure, stop driving the vehicle. The tire is too severely damaged and the tire sealant cannot seal the tire. See *Roadside Assistance Program on page 13-5*.

    If the tire pressure has not dropped more than 68 kPa (10 psi) from the recommended inflation pressure, inflate the tire to the recommended inflation pressure.
20. Wipe off any sealant from the wheel, tire, and vehicle.
21. Dispose of the used sealant canister (5) and sealant/air hose (6) assembly at a local dealer or in accordance with local state codes and practices.
22. Replace with a new canister assembly available from your dealer.
23. After temporarily sealing the tire using the tire sealant and compressor kit, take the vehicle to an authorized dealer within 161 km (100 mi) of driving to have the tire repaired or replaced.

Using the Tire Sealant and Compressor Kit without Sealant to Inflate a Tire (Not Punctured)

To use the air compressor to inflate a tire with air only and not sealant:

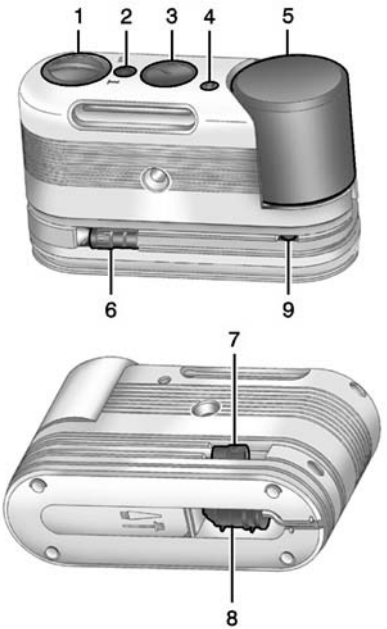

1. Selector Switch (Sealant/Air or Air Only)
2. On/Off Button
3. Pressure Gauge
4. Pressure Deflation Button
5. Tire Sealant Canister
6. Sealant/Air Hose (Clear)
7. Air Only Hose (Black)
8. Power Plug
9. Canister Release Button (Under Sealant/Air Hose)

If a tire goes flat, avoid further tire and wheel damage by driving slowly to a level place. Turn on the hazard warning flashers. See *Hazard Warning Flashers on page 6-4*.

See *If a Tire Goes Flat on page 10-69* for other important safety warnings.

1. Remove the tire sealant and compressor kit from its storage location. See *Storing the Tire Sealant and Compressor Kit on page 10-78*.
2. Unwrap the air only hose (7) and the power plug (8).

3. Place the kit on the ground.

   Make sure the tire valve stem is positioned close to the ground so the hose will reach it.

4. Remove the tire valve stem cap from the flat tire by turning it counterclockwise.

5. Attach the air only hose (7) onto the tire valve stem by turning it clockwise until it is tight.

6. Plug the power plug (8) into the accessory power outlet in the vehicle. Unplug all items from other accessory power outlets. See *Power Outlets on page 5-4*.

   If the vehicle has an accessory power outlet, do not use the cigarette lighter.

   If the vehicle only has a cigarette lighter, use the cigarette lighter.

   Do not pinch the power plug cord in the door or window.

7. Start the vehicle. The vehicle must be running while using the air compressor.

8. Press and turn the selector switch (1) clockwise to the Air Only position.

9. Press the on/off button (2) to turn the compressor on.

   The compressor will inflate the tire with air only.

10. Inflate the tire to the recommended inflation pressure using the pressure gauge (3). The recommended inflation pressure can be found on the Tire and Loading Information label. See *Tire Pressure on page 10-55*.

    The pressure gauge (3) may read higher than the actual tire pressure while the compressor is on. Turn the compressor off to get an accurate reading. The compressor may be turned on/off until the correct pressure is reached.

    If you inflate the tire higher than the recommended pressure you can adjust the excess pressure by pressing the pressure deflation button (4) until the proper pressure reading is reached. This option is only functional when using the air only hose (7).

11. Press the on/off button (2) to turn the tire sealant and compressor kit off.

    Be careful while handling the tire sealant and compressor kit as it could be warm after usage.

12. Unplug the power plug (8) from the accessory power outlet in the vehicle.

13. Disconnect the air only hose (7) from the tire valve stem, by turning it counterclockwise, and replace the tire valve stem cap.

14. Replace the air only hose (7) and the power plug (8) and cord back in its original location.

15. Place the equipment in the original storage location in the vehicle.

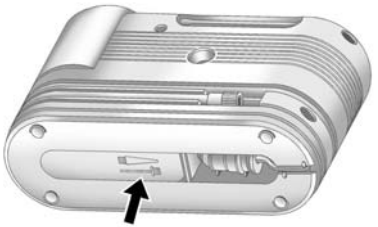

The tire sealant and compressor kit has an accessory adapter located in a compartment on the bottom of its housing that may be used to inflate air mattresses, balls, etc.

Removal and Installation of the Sealant Canister

To remove the sealant canister:

1. Unwrap the sealant hose.
2. Press the canister release button (9).
3. Pull up and remove the canister.
4. Replace with a new canister which is available from your dealer.
5. Push the new canister into place.

Storing the Tire Sealant and Compressor Kit

The tire sealant and compressor kit, if equipped, should be stored in the storage area behind the left rear wheel opening in the rear compartment when it is not being used.

To access the storage area:

1. Open the hatch/trunk. See *Hatch (Trunk) on page 2-14*.

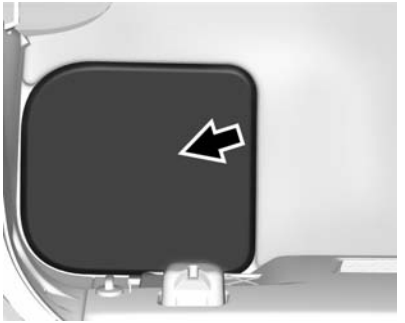

2. Lift the storage cover.

Jump Starting

For more information about the vehicle battery, see *Battery on page 10-33*.

If the battery has run down, use another vehicle and some jumper cables to start the vehicle. Be sure to use the following steps to do it safely.

⚠ Warning

Batteries can hurt you. They can be dangerous because:

- They contain acid that can burn you.
- They contain gas that can explode or ignite.
- They contain enough electricity to burn you.

If you do not follow these steps exactly, some or all of these things can hurt you.

⚠ Caution

Ignoring these steps could result in costly damage to the vehicle that would not be covered by the vehicle warranty. Trying to start the vehicle by pushing or pulling it will not work, and it could damage the vehicle.

The battery is under a battery cover in the hatch/trunk area on the passenger side under the carpet.

Before you connect the cables, here are some basic things you should know. Positive (+) will go to positive (+) terminal. Negative (−) will go the negative (−) terminal.

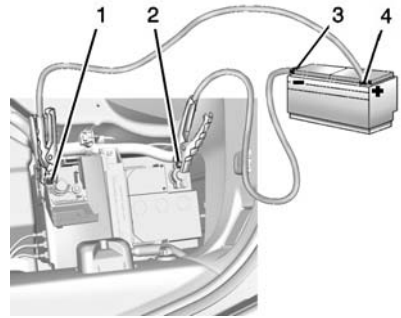

1. Discharged Battery Positive (+) Terminal
2. Discharged Battery Negative (−) Terminal
3. Good Battery Negative (−) Terminal
4. Good Battery Positive (+) Terminal

1. Check the other vehicle. It must have a 12-volt battery with a negative ground system.

⚠ Caution

If the other vehicle does not have a 12-volt system with a negative ground, both vehicles can be damaged. Only use a vehicle that has a 12-volt system with a negative ground for jump starting.

2. Get the vehicles close enough so the jumper cables can reach, but be sure the vehicles are not touching each other. If they are, it could cause a ground connection you do not want. You would not be able to start the vehicle, and the bad grounding could damage the electrical systems.

   To avoid the possibility of the vehicles rolling, set the parking brake firmly on both vehicles involved in the jump start procedure. Put an automatic transmission in P (Park) or a manual transmission in Neutral before setting the parking brakes.

⚠ Caution

If any accessories are left on or plugged in during the jump starting procedure, they could be damaged. The repairs would not be covered by the vehicle warranty. Whenever possible, turn off or unplug all accessories on either vehicle when jump starting.

3. Turn off the ignition on both vehicles. Unplug unnecessary accessories plugged into the cigarette lighter or the accessory power outlet. Turn off the radio and all lamps that are not needed. This will avoid sparks and help save both batteries. And it could save the radio!

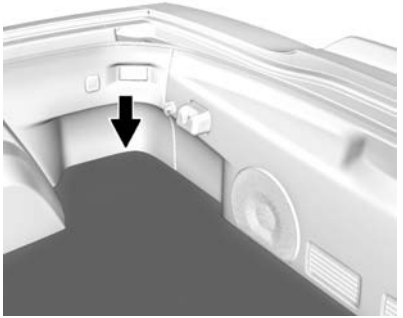

4. Open the rear hatch and lift the carpet on the passenger side of the vehicle to gain access to the battery cover.

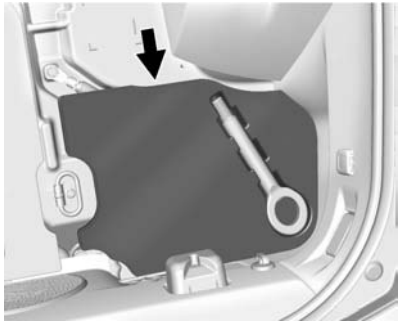

5. Remove the battery cover and locate the positive (+) and negative (−) terminals.
6. Check that the jumper cables do not have loose or missing insulation. If they do, you could get a shock. The vehicles could be damaged too.
7. Open the positive terminal trim cover and connect the red positive (+) cable to the positive (+) terminal (1) of the dead battery.
8. Do not let the other end touch metal. Connect it to the positive (+) terminal (4) of the good battery.
9. Now connect the black negative (−) cable to the negative (−) terminal (3) of the good battery.

   Do not let the other end touch anything until the next step.
10. Connect the other end of the negative (−) cable to the negative (−) terminal (2) on the dead battery.
11. Now start the vehicle with the good battery and run the engine for a while.
12. Try to start the vehicle that had the dead battery. If it will not start after a few tries, it probably needs service.

⚠ Caution

If the jumper cables are connected or removed in the wrong order, electrical shorting may occur and damage the vehicle. The repairs would not be covered by the vehicle warranty. Always connect and remove the jumper cables in the correct order, making sure that the cables do not touch each other or other metal.

Jumper Cable Removal

Reverse the sequence exactly when removing the jumper cables.

The power windows may need to be initialized. See “Window Indexing” under *Power Windows on page 2-22*.

Towing the Vehicle

⚠ Caution

Incorrectly towing a disabled vehicle may cause damage. The damage would not be covered by the vehicle warranty. Do not lash or hook to any suspension components — including the control arms, stabilizer bars, and links — during towing and recovery of a disabled vehicle, or when securing the vehicle to a flatbed car carrier. For towing and recovery of a disabled vehicle, use the proper hooks in the correct locations on the front and rear sub-frames. Use the proper nylon strap harnesses around the tires to secure them to the flatbed car carrier.

Have the vehicle towed on a flatbed car carrier. A wheel lift tow truck could damage the vehicle.

Consult your dealer or a professional towing service if the disabled vehicle must be towed.

To tow the vehicle behind another vehicle for recreational purposes, such as behind a motor home, see “Recreational Vehicle Towing” following.

Recreational Vehicle Towing

⚠ Caution

Dolly towing or dinghy towing the vehicle may cause damage because of reduced ground clearance. Always put the vehicle on a flatbed truck or trailer.

The vehicle was neither designed nor intended to be towed with any of its wheels on the ground. If the vehicle must be towed, see *Towing the Vehicle on page 10-82*.

Appearance Care

Exterior Care

Locks

Locks are lubricated at the factory. Use a de-icing agent only when absolutely necessary, and have the locks greased after using. See *Recommended Fluids and Lubricants on page 11-12*.

Washing the Vehicle

To preserve the vehicle's finish, wash it often and out of direct sunlight.

⚠ Caution

Do not use petroleum-based, acidic, or abrasive cleaning agents as they can damage the vehicle's paint, metal, or plastic parts. If damage occurs, it would not be covered by the vehicle warranty. Approved cleaning

(Continued)

Caution (Continued)

products can be obtained from your dealer. Follow all manufacturer directions regarding correct product usage, necessary safety precautions, and appropriate disposal of any vehicle care product.

⚠ Caution

Avoid using high-pressure washes closer than 30 cm (12 in) to the surface of the vehicle. Use of power washers exceeding 8,274 kPa (1,200 psi) can result in damage or removal of paint and decals.

The symbol is on any underhood compartment electrical center that should not be power washed. This could cause damage that would not be covered by the vehicle warranty.

If using an automatic car wash, comply with the car wash instructions. The windshield wiper must be off. Remove any accessories that may be damaged or interfere with the car wash equipment.

Rinse the vehicle well, before washing and after, to remove all cleaning agents completely. If they are allowed to dry on the surface, they could stain.

Dry the finish with a soft, clean chamois or an all-cotton towel to avoid surface scratches and water spotting.

Finish Care

Application of aftermarket clearcoat sealant/wax materials is not recommended. If painted surfaces are damaged, see your dealer to have the damage assessed and repaired. Foreign materials such as calcium chloride and other salts, ice melting agents, road oil and tar, tree sap, bird droppings, chemicals from industrial chimneys, etc., can damage the vehicle's finish if they remain on painted surfaces. Wash the vehicle as soon as possible. If necessary, use non-abrasive cleaners that are marked safe for painted surfaces to remove foreign matter.

Occasional hand waxing or mild polishing should be done to remove residue from the paint finish. See your dealer for approved cleaning products.

Do not apply waxes or polishes to uncoated plastic, vinyl, rubber, decals, simulated wood, or flat paint as damage can occur.

⚠ Caution

Machine compounding or aggressive polishing on a basecoat/clearcoat paint finish

(Continued)

Caution (Continued)

may damage it. Use only non-abrasive waxes and polishes that are made for a basecoat/clearcoat paint finish on the vehicle.

To keep the paint finish looking new, keep the vehicle garaged or covered whenever possible.

Protecting Exterior Bright Metal Moldings

⚠ Caution

Failure to clean and protect the bright metal moldings can result in a hazy white finish or pitting. This damage would not be covered by the vehicle warranty.

The bright metal moldings on the vehicle are aluminum and stainless steel. To prevent damage always follow these cleaning instructions:

- Be sure the molding is cool to the touch before applying any cleaning solution.
- Use a cleaning solution approved for aluminum and stainless steel. Some cleaners are highly acidic or contain alkaline substances and can damage the moldings.
- Always dilute a concentrated cleaner according to the manufacturer's instructions.
- Do not use chrome cleaners.
- Do not use cleaners that are not intended for automotive use.
- Use a nonabrasive wax on the vehicle after washing to protect and extend the molding finish.

Convertible Top Care

Frequently hand wash convertible tops with mild car wash soap. Never use a stiff brush, steam, bleach, or aggressive cleaners.
If necessary, a soft brush can be used to remove dirt. When finished cleaning, thoroughly rinse the fabric. Avoid automatic car washes with overhead brushes or very high-pressure sprays as they can cause damage and leaking.

Only lower the top when it is completely dry and avoid leaving the top lowered for extended periods of time to prevent excessive interior weathering.

Avoid leaving large amounts of snow on the top for extended periods of time as damage may also occur.

Carbon Fiber Care

Carbon fiber parts can be washed and waxed like any other parts. Use a clear or black pigmented wax. See *Carbon Fiber on page 9-19*.

Cleaning Exterior Lamps/ Lenses, Emblems, Decals and Stripes

Use only lukewarm or cold water, a soft cloth, and a car washing soap to clean exterior lamps, lenses, emblems, decals and stripes. Follow instructions under "Washing the Vehicle" previously in this section.

Lamp covers are made of plastic, and some have a UV protective coating. Do not clean or wipe them while they are dry.

Do not use any of the following on lamp covers:

- Abrasive or caustic agents.
- Washer fluids and other cleaning agents in higher concentrations than suggested by the manufacturer.
- Solvents, alcohols, fuels, or other harsh cleaners.
- Ice scrapers or other hard items.
- Aftermarket appearance caps or covers while the lamps are illuminated, due to excessive heat generated.

⚠ Caution

Failure to clean lamps properly can cause damage to the lamp cover that would not be covered by the vehicle warranty.

⚠ Caution

Using wax on low gloss black finish stripes can increase the gloss level and create a non-uniform finish. Clean low gloss stripes with soap and water only.

Air Intakes

Clear debris from the air intakes, between the hood and windshield, when washing the vehicle.

Windshield and Wiper Blades

Clean the outside of the windshield with glass cleaner.

Clean rubber blades using lint-free cloth or paper towel soaked with windshield washer fluid or a mild detergent. Wash the windshield thoroughly when cleaning the blades. Bugs, road grime, sap, and a buildup of vehicle wash/wax treatments may cause wiper streaking.

Replace the wiper blades if they are worn or damaged. Damage can be caused by extreme dusty conditions, sand, salt, heat, sun, snow, and ice.

Weatherstrips

Apply Dielectric silicone grease on weatherstrips to make them last longer, seal better, and not stick or squeak. Lubricate weatherstrips at least once a year. Hot, dry climates require more frequent application. Black marks from rubber material on painted surfaces can be removed by

rubbing with a clean cloth. See *Recommended Fluids and Lubricants on page 11-12*.

Tires

Use a stiff brush with tire cleaner to clean the tires.

> **⚠ Caution**
>
> Using petroleum-based tire dressing products on the vehicle may damage the paint finish and/or tires. When applying a tire dressing, always wipe off any overspray from all painted surfaces on the vehicle.

Wheels and Trim — Aluminum or Chrome

Use a soft, clean cloth with mild soap and water to clean the wheels. After rinsing thoroughly with clean water, dry with a soft, clean towel. A wax may then be applied.

> **⚠ Caution**
>
> Chrome wheels and other chrome trim may be damaged if the vehicle is not washed after driving on roads that have been sprayed with magnesium, calcium, or sodium chloride. These chlorides are used on roads for conditions such as ice and dust. Always wash the chrome with soap and water after exposure.

> **⚠ Caution**
>
> To avoid surface damage, do not use strong soaps, chemicals, abrasive polishes, cleaners, brushes, or cleaners that contain acid on aluminum or chrome-plated wheels. Use only approved cleaners. Also, never drive a vehicle with aluminum or chrome-plated wheels through an
>
> (Continued)

> **Caution (Continued)**
>
> automatic car wash that uses silicone carbide tire cleaning brushes. Damage could occur and the repairs would not be covered by the vehicle warranty.

Steering, Suspension, and Chassis Components

Visually inspect steering, suspension, and chassis components for damaged, loose, or missing parts or signs of wear at least once a year.

Inspect power steering for proper hook-up, binding, leaks, cracks, chafing, etc.

Visually check constant velocity joint boots and axle seals for leaks.

Body Component Lubrication

Lubricate all key lock cylinders, hood hinges and liftgate hinges, unless the components are plastic. Applying silicone grease on

weatherstrips with a clean cloth will make them last longer, seal better, and not stick or squeak.

Underbody Maintenance

At least twice a year, spring and fall use plain water to flush any corrosive materials from the underbody. Take care to thoroughly clean any areas where mud and other debris can collect.

Composite Springs

⚠ Caution

Do not use acidic or corrosive cleaning products, engine degreasers, or aluminum cleaning agents on fiberglass springs as it may cause damage. The repairs would not be covered by the vehicle warranty. Use only approved cleaners.

Body Damage

If the vehicle is damaged and requires sheet metal repair or replacement, make sure the body repair shop applies anti-corrosion material to parts repaired or replaced to restore corrosion protection.

Original manufacturer replacement parts will provide the corrosion protection while maintaining the vehicle warranty.

Finish Damage

Quickly repair minor chips and scratches with touch-up materials available from your dealer. Larger areas of finish damage can be corrected in your dealer's body and paint shop.

Chemical Paint Spotting

Airborne pollutants can fall upon and attack painted vehicle surfaces causing blotchy, ring-shaped discolorations, and small, irregular dark spots etched into the paint surface. Refer to Finish Care previously in this section.

Interior Care

To prevent dirt particle abrasions, regularly clean the vehicle's interior. Immediately remove any soils. Note that newspapers or dark garments that can transfer color to home furnishings can also permanently transfer color to the vehicle's interior.

Use a soft bristle brush to remove dust from knobs and crevices on the instrument cluster. Using a mild soap solution, immediately remove hand lotions, sunscreen, and insect repellent from all interior surfaces or permanent damage may result.

Your dealer may have products for cleaning the interior. Use cleaners specifically designed for the surfaces being cleaned to prevent permanent damage. Apply all cleaners directly to the cleaning cloth. Do not spray cleaners directly

on any switches or controls. Cleaners should be removed quickly. Never allow cleaners to remain on the surface being cleaned for extended periods of time.

Cleaners may contain solvents that can become concentrated in the interior. Before using cleaners, read and adhere to all safety instructions on the label. While cleaning the interior, maintain adequate ventilation by opening the doors and windows.

To prevent damage, do not clean the interior using the following cleaners or techniques:

- Never use a razor or any other sharp object to remove a soil from any interior surface.
- Never use a brush with stiff bristles.
- Never rub any surface aggressively or with excessive pressure.
- Do not use laundry detergents or dishwashing soaps with degreasers. For liquid cleaners, use approximately 20 drops per 3.8 L (1 gal) of water.
  A concentrated soap solution will leave a residue that creates streaks and attracts dirt. Do not use solutions that contain strong or caustic soap.
- Do not heavily saturate the upholstery when cleaning.
- Do not use solvents or cleaners containing solvents.

Interior Glass

To clean, use a terry cloth fabric dampened with water. Wipe droplets left behind with a clean dry cloth. Commercial glass cleaners may be used, if necessary, after cleaning the interior glass with plain water.

⚠ Caution

To prevent scratching, never use abrasive cleaners on automotive glass. Abrasive cleaners or aggressive cleaning may damage the rear window defogger.

Cleaning the windshield with water during the first three to six months of ownership will reduce tendency to fog.

Speaker Covers

Vacuum around a speaker cover gently, so that the speaker will not be damaged. Clean spots with just water and mild soap.

Coated Moldings

Coated moldings should be cleaned.

- When lightly soiled, wipe with a sponge or soft lint-free cloth dampened with water.
- When heavily soiled, use warm soapy water.

Fabric/Carpet/Suede/ Sueded-Microfiber

Start by vacuuming the surface using a soft brush attachment. If a rotating brush attachment is being used during vacuuming, only use it on the floor carpet. Before cleaning, gently remove as much of the soil as possible using one of the following techniques:

- Gently blot liquids with a paper towel. Continue blotting until no more soil can be removed.
- For solid soils, remove as much as possible prior to vacuuming.

To clean:

1. Saturate a clean lint-free colorfast cloth with water. Microfiber cloth is recommended to prevent lint transfer to the fabric or carpet.
2. Remove excess moisture by gently wringing until water does not drip from the cleaning cloth.
3. Start on the outside edge of the soil and gently rub toward the center. Fold the cleaning cloth to a clean area frequently to prevent forcing the soil in to the fabric.
4. Continue gently rubbing the soiled area until there is no longer any color transfer from the soil to the cleaning cloth.
5. If the soil is not completely removed, use a mild soap solution followed only by plain water.

If the soil is not completely removed, it may be necessary to use a commercial upholstery cleaner or spot lifter. Test a small hidden area for colorfastness before using a commercial upholstery cleaner or spot lifter. If ring formation occurs, clean the entire fabric or carpet.

Following the cleaning process, a paper towel can be used to blot excess moisture.

Cleaning High Gloss Surfaces and Vehicle Information and Radio Displays

For vehicles with high gloss surfaces or vehicle displays, use a microfiber cloth to wipe surfaces. Before wiping the surface with the microfiber cloth, use a soft bristle brush to remove dirt that could scratch the surface. Then use the microfiber cloth by gently rubbing to clean. Never use window cleaners or solvents. Periodically hand wash the microfiber cloth separately, using mild soap. Do not use bleach or fabric softener. Rinse thoroughly and air dry before next use.

⚠ Caution

Do not attach a device with a suction cup to the display. This may cause damage and would not be covered by the warranty.

Instrument Panel, Leather, Vinyl, Other Plastic Surfaces, Low Gloss Paint Surfaces and Natural Open Pore Wood Surfaces

Use a soft microfiber cloth dampened with water to remove dust and loose dirt. For a more thorough cleaning, use a soft microfiber cloth dampened with a mild soap solution.

⚠ Caution

Soaking or saturating leather, especially perforated leather, as well as other interior surfaces, may cause permanent damage. Wipe excess moisture from these surfaces after cleaning and allow them to dry naturally. Never use heat, steam, spot lifters, or spot removers. Do not use cleaners that contain silicone or wax-based products. Cleaners containing

(Continued)

Caution (Continued)

these solvents can permanently change the appearance and feel of leather or soft trim and are not recommended.

Do not use cleaners that increase gloss, especially on the instrument panel. Reflected glare can decrease visibility through the windshield under certain conditions.

⚠ Caution

Use of air fresheners may cause permanent damage to plastics and painted surfaces. If an air freshener comes in contact with any plastic or painted surface in the vehicle, blot immediately and clean with a soft cloth dampened with a mild soap solution. Damage caused by air fresheners would not be covered by the vehicle warranty.

Cargo Cover and Convenience Net

Wash with warm water and mild detergent. Do not use chlorine bleach. Rinse with cold water, and then dry completely.

Care of Safety Belts

Keep belts clean and dry.

⚠ Warning

Do not bleach or dye safety belts. It may severely weaken them. In a crash, they might not be able to provide adequate protection. Clean safety belts only with mild soap and lukewarm water.

Floor Mats

⚠ Warning

If a floor mat is the wrong size or is not properly installed, it can interfere with the pedals. Interference with the pedals can cause unintended acceleration and/or increased stopping distance which can cause a crash and injury. Make sure the floor mat does not interfere with the pedals.

Use the following guidelines for proper floor mat usage.

- The original equipment floor mats were designed for your vehicle. If the floor mats need replacing, it is recommended that GM certified floor mats be purchased. Non-GM floor mats may not fit properly and may interefere with the accelerator or brake pedal. Always check that the floor mats do not interfere with the pedals.
- Do not use a floor mat if the vehicle is not equipped with a floor mat retainer on the driver side floor.
- Use the floor mat with the correct side up. Do not turn it over.
- Do not place anything on top of the driver side floor mat.
- Use only a single floor mat on the driver side.
- Do not place one floor mat on top of another.

The floor mats are held in place by two retainers.

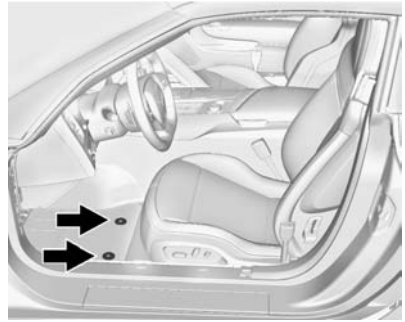

Installing and Replacing the Floor Mats

1. Pull up on the rear of the floor mat to remove it from the retainers.
2. Reinstall by lining up the openings in the floor mat over the retainers and push down into position.
3. Make sure the floor mat is properly secured and verify that it does not interfere with the pedals.

✍ NOTES

Service and Maintenance

General Information
General Information 11-1

Maintenance Schedule
Maintenance Schedule 11-2

Special Application Services
Special Application Services 11-8

Additional Maintenance and Care
Additional Maintenance and Care 11-9

Recommended Fluids, Lubricants, and Parts
Recommended Fluids and Lubricants 11-12
Maintenance Replacement Parts 11-13

Maintenance Records
Maintenance Records 11-15

General Information

Your vehicle is an important investment. This section describes the required maintenance for the vehicle. Follow this schedule to help protect against major repair expenses resulting from neglect or inadequate maintenance. It may also help to maintain the value of the vehicle if it is sold. It is the responsibility of the owner to have all required maintenance performed.

Your dealer has trained technicians who can perform required maintenance using genuine replacement parts. They have up-to-date tools and equipment for fast and accurate diagnostics. Many dealers have extended evening and Saturday hours, courtesy transportation, and online scheduling to assist with service needs.

Your dealer recognizes the importance of providing competitively priced maintenance and repair services. With trained technicians, the dealer is the place for routine maintenance such as oil changes and tire rotations and additional maintenance items like tires, brakes, batteries, and wiper blades.

⚠ Caution

Damage caused by improper maintenance can lead to costly repairs and may not be covered by the vehicle warranty. Maintenance intervals, checks, inspections, recommended fluids, and lubricants are important to keep the vehicle in good working condition.

The Required Services are the responsibility of the vehicle owner. It is recommended to have your dealer perform these services every 12 000 km/7,500 mi. Proper vehicle maintenance helps to keep the vehicle in good working condition, improves fuel economy, and reduces vehicle emissions.

Because of the way people use vehicles, maintenance needs vary. There may need to be more frequent checks and services. The Additional Required Services - Normal are for vehicles that:

- Carry passengers and cargo within recommended limits on the Tire and Loading Information label. See *Vehicle Load Limits on page 9-14*.
- Are driven on reasonable road surfaces within legal driving limits.
- Use the recommended fuel. See *Fuel on page 9-53*.

Refer to the information in the Maintenance Schedule Additional Required Services - Normal chart.

The Additional Required Services - Severe are for vehicles that are:

- Mainly driven in heavy city traffic in hot weather.
- Mainly driven in hilly or mountainous terrain.
- Frequently towing a trailer.
- Used for high speed or competitive driving.
- Used for taxi, police, or delivery service.

Refer to the information in the Maintenance Schedule Additional Required Services - Severe chart.

⚠ Warning

Performing maintenance work can be dangerous and can cause serious injury. Perform maintenance work only if the required information, proper tools, and equipment are available.
If they are not, see your dealer to have a trained technician do the work. See *Doing Your Own Service Work on page 10-5*.

Maintenance Schedule

Owner Checks and Services

At Each Fuel Stop

- Check the engine oil level. See *Engine Oil on page 10-12*.

Once a Month

- Check the tire inflation pressures. See *Tire Pressure on page 10-55*.
- Inspect the tires for wear. See *Tire Inspection on page 10-61*.
- Check the windshield washer fluid level. See *Washer Fluid on page 10-28*.

Engine Oil Change

When the CHANGE ENGINE OIL SOON message displays, have the engine oil and filter changed within the next 1 000 km/600 mi. If driven under the best conditions, the engine oil life system may not indicate the need for vehicle service

for up to a year. The engine oil and filter must be changed at least once a year and the oil life system must be reset. Your trained dealer technician can perform this work. If the engine oil life system is reset accidentally, service the vehicle within 5 000 km/3,000 mi since the last service. Reset the oil life system when the oil is changed. See *Engine Oil Life System on page 10-18*.

Required Services Every 12 000 km/7,500 mi

- Check engine oil level and oil life percentage. If needed, change engine oil and filter, and reset oil life system. See *Engine Oil on page 10-12* and *Engine Oil Life System on page 10-18*.
- Check engine coolant level. See *Engine Coolant on page 10-24*.
- Check windshield washer fluid level. See *Washer Fluid on page 10-28*.
- Visually inspect windshield wiper blades for wear, cracking, or contamination. See *Exterior Care on page 10-82*. Replace worn or damaged wiper blades. See *Wiper Blade Replacement on page 10-36*.
- Check tire inflation pressures. See *Tire Pressure on page 10-55*.
- Inspect tire wear. See *Tire Inspection on page 10-61*.
- Visually check for fluid leaks.
- Inspect engine air cleaner filter. See *Engine Air Cleaner/Filter on page 10-20*.
- Inspect brake system.
- Visually inspect steering, suspension, and chassis components for damaged, loose, or missing parts or signs of wear. See *Exterior Care on page 10-82*.
- Check restraint system components. See *Safety System Check on page 3-13*.
- Visually inspect fuel system for damage or leaks.
- Visually inspect exhaust system and nearby heat shields for loose or damaged parts.
- Lubricate body components. See *Exterior Care on page 10-82*.
- Check starter switch. See *Starter Switch Check on page 10-35*.
- Check automatic transmission shift lock control function. See *Automatic Transmission Shift Lock Control Function Check on page 10-35*.
- Check parking brake and automatic transmission park mechanism. See *Park Brake and P (Park) Mechanism Check on page 10-36*.
- Check accelerator pedal for damage, high effort, or binding. Replace if needed.

- Visually inspect gas strut for signs of wear, cracks, or other damage. Check the hold open ability of the strut. See your dealer if service is required.

Maintenance Schedule Additional Required Services - Normal	12 000 km/7,500 mi	24 000 km/15,000 mi	36 000 km/22,500 mi	48 000 km/30,000 mi	60 000 km/37,500 mi	72 000 km/45,000 mi	84 000 km/52,500 mi	96 000 km/60,000 mi	108 000 km/67,500 mi	120 000 km/75,000 mi	132 000 km/82,500 mi	144 000 km/90,000 mi	156 000 km/97,500 mi	168 000 km/105,000 mi	180 000 km/112,500 mi	192 000 km/120,000 mi	204 000 km/127,500 mi	216 000 km/135,000 mi	228 000 km/142,500 mi	240 000 km/150,000 mi
Perform Required Services. Check engine oil level and oil life percentage. Change engine oil and filter, if needed.	✓	✓	✓	✓	✓	✓	✓	✓	✓	✓	✓	✓	✓	✓	✓	✓	✓	✓	✓	✓
Replace passenger compartment air filter. (1)			✓			✓			✓			✓			✓			✓		
Inspect evaporative control system. (2)						✓						✓						✓		
Replace engine air cleaner filter. (3)					✓					✓					✓					✓
LT1 Engine: Replace spark plugs. Inspect spark plug wires.													✓							
LT4 Supercharged Engine: Replace spark plugs. Inspect spark plug wires.								✓								✓				
Drain and fill engine cooling system. (4)																				✓
Change rear axle fluid.						✓						✓						✓		
Visually inspect accessory drive belts. (5)																				✓
Replace brake fluid. (6)						✓						✓						✓		
Replace clutch fluid. (6)						✓						✓						✓		

Footnotes — Maintenance Schedule Additional Required Services - Normal

(1) Or every two years, whichever comes first. More frequent replacement may be needed if the vehicle is driven in areas with heavy traffic, areas with poor air quality, or areas with high dust levels. Replacement may also be needed if there is a reduction in air flow, excessive window fogging, or odors.

(2) Check all fuel and vapor lines and hoses for proper hook-up, routing, and condition.

(3) Or every four years, whichever comes first.

(4) Or every five years, whichever comes first. See *Cooling System (Aero Panel) on page 10-23* or *Cooling System (Engine) on page 10-22*.

(5) Or every 10 years, whichever comes first. Inspect for fraying, excessive cracking, or damage; replace, if needed.

(6) Or every three years, whichever occurs first.

Maintenance Schedule Additional Required Services - Severe	12 000 km/7,500 mi	24 000 km/15,000 mi	36 000 km/22,500 mi	48 000 km/30,000 mi	60 000 km/37,500 mi	72 000 km/45,000 mi	84 000 km/52,500 mi	96 000 km/60,000 mi	108 000 km/67,500 mi	120 000 km/75,000 mi	132 000 km/82,500 mi	144 000 km/90,000 mi	156 000 km/97,500 mi	168 000 km/105,000 mi	180 000 km/112,500 mi	192 000 km/120,000 mi	204 000 km/127,500 mi	216 000 km/135,000 mi	228 000 km/142,500 mi	240 000 km/150,000 mi
Perform Required Services. Check engine oil level and oil life percentage. Change engine oil and filter, if needed.	✓	✓	✓	✓	✓	✓	✓	✓	✓	✓	✓	✓	✓	✓	✓	✓	✓	✓	✓	✓
Replace passenger compartment air filter. (1)			✓			✓			✓			✓			✓			✓		
Inspect evaporative control system. (2)						✓						✓						✓		
Replace engine air cleaner filter. (3)					✓					✓					✓					✓
Change automatic transmission fluid and filter.						✓						✓						✓		
Change manual transmission fluid.						✓						✓						✓		
LT1 Engine: Replace spark plugs. Inspect spark plug wires.													✓							
LT4 Supercharged Engine: Replace spark plugs. Inspect spark plug wires.								✓								✓				
Drain and fill engine cooling system. (4)																				✓
Change rear axle fluid.						✓						✓						✓		
Visually inspect accessory drive belts. (5)																				✓
Replace brake fluid. (6)						✓						✓						✓		
Replace clutch fluid. (6)						✓						✓						✓		

Footnotes — Maintenance Schedule Additional Required Services - Severe

(1) Or every two years, whichever comes first. More frequent replacement may be needed if the vehicle is driven in areas with heavy traffic, areas with poor air quality, or areas with high dust levels. Replacement may also be needed if there is a reduction in air flow, excessive window fogging, or odors.

(2) Check all fuel and vapor lines and hoses for proper hook-up, routing, and condition.

(3) Or every four years, whichever comes first.

(4) Or every five years, whichever comes first. See *Cooling System (Aero Panel) on page 10-23* or *Cooling System (Engine) on page 10-22*.

(5) Or every 10 years, whichever comes first. Inspect for fraying, excessive cracking, or damage; replace, if needed.

(6) Or every three years, whichever comes first.

Special Application Services

- Severe Commercial Use Vehicles Only: Lubricate chassis components every 5 000 km/ 3,000 mi.
- Have underbody flushing service performed. See "Underbody Maintenance" in *Exterior Care on page 10-82*.

Additional Maintenance and Care

Your vehicle is an important investment and caring for it properly may help to avoid future costly repairs. To maintain vehicle performance, additional maintenance services may be required.

It is recommended that your dealer perform these services — their trained dealer technicians know your vehicle best. Your dealer can also perform a thorough assessment with a multi-point inspection to recommend when your vehicle may need attention.

The following list is intended to explain the services and conditions to look for that may indicate services are required.

Battery

The battery supplies power to start the engine and operate any additional electrical accessories.

- To avoid break-down or failure to start the vehicle, maintain a battery with full cranking power.
- Trained dealer technicians have the diagnostic equipment to test the battery and ensure that the connections and cables are corrosion-free.

Belts

- Belts may need replacing if they squeak or show signs of cracking or splitting.
- Trained dealer technicians have access to tools and equipment to inspect the belts and recommend adjustment or replacement when necessary.

Brakes

Brakes stop the vehicle and are crucial to safe driving.

- Signs of brake wear may include chirping, grinding, or squealing noises, or difficulty stopping.
- Trained dealer technicians have access to tools and equipment to inspect the brakes and recommend quality parts engineered for the vehicle.

Fluids

Proper fluid levels and approved fluids protect the vehicle's systems and components. See *Recommended Fluids and Lubricants on page 11-12* for GM approved fluids.

- Engine oil and windshield washer fluid levels should be checked at every fuel fill.
- Instrument cluster lights may come on to indicate that fluids may be low and need to be filled.

Hoses

Hoses transport fluids and should be regularly inspected to ensure that there are no cracks or leaks. With a multi-point inspection, your dealer can inspect the hoses and advise if replacement is needed.

Lamps

Properly working headlamps, taillamps, and brake lamps are important to see and be seen on the road.

- Signs that the headlamps need attention include dimming, failure to light, cracking, or damage. The brake lamps need to be checked periodically to ensure that they light when braking.
- With a multi-point inspection, your dealer can check the lamps and note any concerns.

Shocks and Struts

Shocks and struts help aid in control for a smoother ride.

- Signs of wear may include steering wheel vibration, bounce/sway while braking, longer stopping distance, or uneven tire wear.
- As part of the multi-point inspection, trained dealer technicians can visually inspect the shocks and struts for signs of leaking, blown seals, or damage, and can advise when service is needed.

Tires

Tires need to be properly inflated, rotated, and balanced. Maintaining the tires can save money and fuel, and can reduce the risk of tire failure.

- Signs that the tires need to be replaced include three or more visible treadwear indicators; cord or fabric showing through the rubber; cracks or cuts in the tread or sidewall; or a bulge or split in the tire.
- Trained dealer technicians can inspect and recommend the right tires. Your dealer can also provide tire/wheel balancing services to ensure smooth vehicle operation at all speeds. Your dealer sells and services name brand tires.

Vehicle Care

To help keep the vehicle looking like new, vehicle care products are available from your dealer. For information on how to clean and protect the vehicle's interior and exterior, see *Interior Care on page 10-87* and *Exterior Care on page 10-82*.

Wheel Alignment

Wheel alignment is critical for ensuring that the tires deliver optimal wear and performance.

- Signs that the alignment may need to be adjusted include pulling, improper vehicle handling, or unusual tire wear.
- Your dealer has the required equipment to ensure proper wheel alignment.

Windshield

For safety, appearance, and the best viewing, keep the windshield clean and clear.

- Signs of damage include scratches, cracks, and chips.
- Trained dealer technicians can inspect the windshield and recommend proper replacement if needed.

Wiper Blades

Wiper blades need to be cleaned and kept in good condition to provide a clear view.

- Signs of wear include streaking, skipping across the windshield, and worn or split rubber.
- Trained dealer technicians can check the wiper blades and replace them when needed.

Recommended Fluids, Lubricants, and Parts

Recommended Fluids and Lubricants

Fluids and lubricants identified below by name, part number, or specification can be obtained from your dealer.

Usage	Fluid/Lubricant
Engine Oil	Use only engine oil meeting the dexos1™ specification of the proper SAE viscosity grade. Look for the dexos1 approved logo for GM approved engine oil. For track events or competitive driving, use Mobil 1® engine oil. See *Engine Oil on page 10-12*.
Engine Coolant	40/60 coolant/water mixture of clean, drinkable water and use only DEX-COOL® Coolant. See *Engine Coolant on page 10-24*.
Hydraulic Brake System	DOT 3 Hydraulic Brake Fluid (GM Part No. 19299818, in Canada 19299819).
Windshield Washer	Automotive windshield washer fluid that meets regional freeze protection requirements.
Hydraulic Clutch System	Hydraulic Clutch Fluid. Use only GM Part No. 19299570, in Canada 19299571, Super DOT 4 brake fluid.
Chassis Lubrication	Chassis Lubricant (GM Part No. 12377985, in Canada 88901242) or lubricant meeting requirements of NLGI #2, Category LB or GC-LB.
Automatic Transmission	DEXRON®-HP Automatic Transmission Fluid (GM Part No. 19300536, in Canada 19300537).

Usage	Fluid/Lubricant
Manual Transmission	Manual Transmission Fluid (GM Part No. 88861800, in Canada 88861801).
Rear Axle	DEXRON® LS Gear Oil (GM Part No. 88862624, in Canada 88862625). See *Rear Axle on page 10-34* for information on checking the fluid.
Hood Latch Assembly, Secondary Latch, Pivots, Spring Anchor, and Release Pawl	Lubriplate Lubricant Aerosol (GM Part No. 89021668, in Canada 89021674) or lubricant meeting requirements of NLGI #2, Category LB or GC-LB.
Key Lock Cylinders, Hood and Door Hinges	Multi-Purpose Lubricant, Superlube (GM Part No. 12346241, in Canada 10953474).
Weatherstrip Conditioning	Weatherstrip Lubricant (GM Part No. 3634770, in Canada 10953518) or Dielectric Silicone Grease (GM Part No. 12345579, in Canada 10953481).

Maintenance Replacement Parts

Replacement parts identified below by name, part number, or specification can be obtained from your dealer.

Part	GM Part Number	ACDelco Part Number
Engine Air Cleaner/Filter	23107355	A3191C
Engine Oil Filter	12640445	PF64
Passenger Compartment Air Filter Element	22862632	CF139

Part	GM Part Number	ACDelco Part Number
Spark Plug		
6.2L LT1 Engine	12622441	41–114
6.2L LT4 Supercharged Engine	12642722	41–128
Wiper Blades		
Driver Side — 550 mm (21.7 in)	22756331	—
Passenger Side — 500 mm (19.7 in)	22756330	—

Maintenance Records

After the scheduled services are performed, record the date, odometer reading, who performed the service, and the type of services performed in the boxes provided. Retain all maintenance receipts.

Date	Odometer Reading	Serviced By	Services Performed

Date	Odometer Reading	Serviced By	Services Performed

Technical Data

Vehicle Identification
Vehicle Identification Number (VIN) 12-1
Service Parts Identification Label 12-1

Vehicle Data
Capacities and Specifications 12-2
Engine Drive Belt Routing . . . 12-4

Vehicle Identification

Vehicle Identification Number (VIN)

This legal identifier is in the front corner of the instrument panel, on the left side of the vehicle. It can be seen through the windshield from outside. The VIN also appears on the Vehicle Certification and Service Parts labels and certificates of title and registration.

Engine Identification

The eighth character in the VIN is the engine code. This code identifies the vehicle's engine, specifications, and replacement parts. See “Engine Specifications” under *Capacities and Specifications on page 12-2* for the vehicle's engine code.

Service Parts Identification Label

This label, under the carpet in the hatch/trunk area on the passenger side, has the following information:

- Vehicle Identification Number (VIN).
- Model designation.
- Paint information.
- Production options and special equipment.

Do not remove this label from the vehicle.

Vehicle Data

Capacities and Specifications

The following approximate capacities are given in metric and English conversions.

See *Recommended Fluids and Lubricants on page 11-12*.

Application	Capacities	
	Metric	English
Air Conditioning Refrigerant	For the air conditioning system refrigerant charge type and amount, see the refrigerant label under the hood. See your dealer for more information.	
Cooling System	10.7 L	11.3 qt
Engine Oil with Filter		
6.2L LT1 Engine Except Z51	6.6 L	7.0 qt
6.2L LT1 Engine With Z51	9.3 L	9.8 qt
6.2L LT4 Supercharged Engine	9.3 L	9.8 qt
Fuel Tank	70.4 L	18.6 gal
Wheel Nut Torque	140 N•m	100 lb ft
All capacities are approximate. When adding, be sure to fill to the approximate level, as recommended in this manual. Recheck fluid level after filling		

Engine Specifications

Engine	VIN Code	Transmission	Spark Plug Gap	Firing Order
6.2L V8 LT1	7	Automatic Manual	0.95–1.10 mm (0.037–0.043 in)	1–8–7–2–6–5–4–3
6.2L LT4 Supercharged	6	Automatic Manual	0.725–0.875 mm (0.029–0.034 in)	1–8–7–2–6–5–4–3

Engine Data

Engine	Horsepower	Torque	Displacement	Compression Ratio
6.2L V8 Standard	455	460 lb ft	6.2L	11.5:1
6.2L V8 with Performance Exhaust	460	465 lb ft	6.2L	11.5:1
6.2L V8 Supercharged	650	650 lb ft	6.2L	10.0:1

Engine Drive Belt Routing

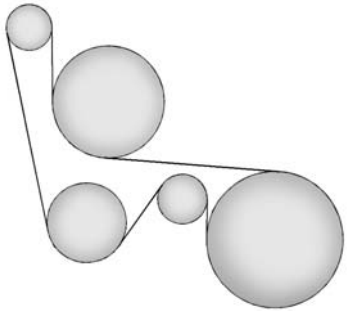

6.2L LT1 Engine

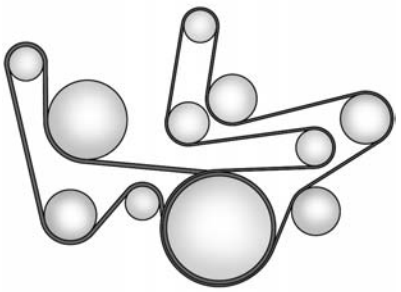

6.2L LT4 Engine

Customer Information

Customer Information
Customer Satisfaction Procedure 13-1
Customer Assistance Offices 13-3
Customer Assistance for Text Telephone (TTY) Users 13-4
Online Owner Center 13-4
GM Mobility Reimbursement Program 13-5
Roadside Assistance Program 13-5
Scheduling Service Appointments 13-7
Courtesy Transportation Program 13-7
Collision Damage Repair 13-8
Service Publications Ordering Information 13-11
Radio Frequency Identification (RFID) 13-11
Radio Frequency Statement 13-12

Reporting Safety Defects
Reporting Safety Defects to the United States Government 13-12
Reporting Safety Defects to the Canadian Government 13-13
Reporting Safety Defects to General Motors 13-13

Vehicle Data Recording and Privacy
Vehicle Data Recording and Privacy 13-14
Event Data Recorders 13-14
OnStar® 13-15
Infotainment System 13-15

Customer Information

Customer Satisfaction Procedure

Your satisfaction and goodwill are important to your dealer and to Chevrolet. Normally, any concerns with the sales transaction or the operation of the vehicle will be resolved by your dealer's sales or service departments. Sometimes, however, despite the best intentions of all concerned, misunderstandings can occur. If your concern has not been resolved to your satisfaction, the following steps should be taken:

STEP ONE: Discuss your concern with a member of dealership management. Normally, concerns can be quickly resolved at that level. If the matter has already been reviewed with the sales, service, or parts manager, contact the owner of your dealership or the general manager.

STEP TWO: If after contacting a member of dealership management, it appears your concern cannot be resolved by your dealership without further help, in the U.S., call the Chevrolet Customer Assistance Center at 1-800-222-1020. In Canada, call General Motors of Canada Customer Care Centre at 1-800-263-3777 (English), or 1-800-263-7854 (French).

We encourage you to call the toll-free number in order to give your inquiry prompt attention. Have the following information available to give the Customer Assistance representative:

- Vehicle Identification Number (VIN). This is available from the vehicle registration or title, or the plate at the top left of the instrument panel and visible through the windshield.
- Dealership name and location.
- Vehicle delivery date and present mileage.

When contacting Chevrolet, remember that your concern will likely be resolved at a dealer's facility. That is why we suggest following Step One first.

STEP THREE — U.S. Owners: Both General Motors and your dealer are committed to making sure you are completely satisfied with your new vehicle. However, if you continue to remain unsatisfied after following the procedure outlined in Steps One and Two, you can file with the Better Business Bureau (BBB) Auto Line® Program to enforce your rights.

The BBB Auto Line Program is an out-of-court program administered by the Council of Better Business Bureaus to settle automotive disputes regarding vehicle repairs or the interpretation of the New Vehicle Limited Warranty. Although you may be required to resort to this informal dispute resolution program prior to filing a court action, use of the program is free of charge and your case will generally be heard within 40 days. If you do not agree with the decision given in your case, you may reject it and proceed with any other venue for relief available to you.

You may contact the BBB Auto Line Program using the toll-free telephone number or write them at the following address:

BBB Auto Line Program
Council of Better Business Bureaus, Inc.
4200 Wilson Boulevard
Suite 800
Arlington, VA 22203-1838

Telephone: 1-800-955-5100
www.dr.bbb.org/goauto

This program is available in all 50 states and the District of Columbia. Eligibility is limited by vehicle age, mileage, and other factors. General Motors reserves the right to change eligibility limitations and/or discontinue its participation in this program.

STEP THREE — Canadian Owners: In the event that you do not feel your concerns have been addressed after following the procedure outlined in Steps One and Two, General Motors of Canada Limited wants you to be aware of its participation in a no-charge Mediation/Arbitration Program. General Motors of Canada Limited has committed to binding arbitration of owner disputes involving factory-related vehicle service claims. The program provides for the review of the facts involved by an impartial third party arbiter, and may include an informal hearing before the arbiter. The program is designed so that the entire dispute settlement process, from the time you file your complaint to the final decision, should be completed in about 70 days. We believe our impartial program offers advantages over courts in most jurisdictions because it is informal, quick, and free of charge.

For further information concerning eligibility in the Canadian Motor Vehicle Arbitration Plan (CAMVAP), call toll-free 1-800-207-0685, or call the General Motors Customer Care Centre, 1-800-263-3777 (English), 1-800-263-7854 (French), or write to:

The Mediation/Arbitration Program
c/o Customer Care Centre
General Motors of Canada Limited
Mail Code: CA1-163-005
1908 Colonel Sam Drive
Oshawa, Ontario L1H 8P7

Your inquiry should be accompanied by the Vehicle Identification Number (VIN).

Customer Assistance Offices

Chevrolet encourages customers to call the toll-free number for assistance. However, if a customer wishes to write or e-mail Chevrolet, the letter should be addressed to:

United States and Puerto Rico

Chevrolet Motor Division
Chevrolet Customer Assistance Center
P.O. Box 33170
Detroit, MI 48232-5170
www.Chevrolet.com

1-800-222-1020
1-800-833-2438 (For Text Telephone Devices (TTYs))
Roadside Assistance:
1-800-243-8872

From U.S. Virgin Islands:

1-800-496-9994

Canada

General Motors of Canada Limited
Customer Care Centre, Mail Code: CA1-163-005
1908 Colonel Sam Drive
Oshawa, Ontario L1H 8P7
www.gm.ca

1-800-263-3777 (English)
1-800-263-7854 (French)
1-800-263-3830 (For Text Telephone devices (TTYs))
Roadside Assistance:
1-800-268-6800

Overseas

Please contact the local General Motors Business Unit.

Customer Assistance for Text Telephone (TTY) Users

To assist customers who are deaf, hard of hearing, or speech-impaired and who use Text Telephones (TTYs), Chevrolet has TTY equipment available at its Customer Assistance Center. Any TTY user in the U.S. can communicate with Chevrolet by dialing: 1-800-833-2438. TTY users in Canada can dial 1-800-263-3830.

Online Owner Center

Online Owner Experience (U.S.) my.chevrolet.com

The Chevrolet online owner experience is a one-stop resource that allows interaction with Chevrolet and keeps important vehicle-specific information in one place.

Membership Benefits

(Vehicle Information): Download owner manuals and view vehicle-specific how-to videos.

(Maintenance Information): View maintenance schedules, alerts, OnStar onboard vehicle diagnostic information, and schedule service appointments.

(Service History): View and print dealer-recorded service records and self-recorded service records.

(Preferred Dealer Information): Select a preferred dealer and view dealer location, maps, phone numbers, and hours.

(Warranty Tracking Information): Track the vehicle's warranty information.

(Recall Information): View active recalls by Vehicle Identification Number (VIN). See *Vehicle Identification Number (VIN) on page 12-1*.

(Other Account Information): View GM Card, SiriusXM Satellite radio (if equipped), and OnStar account information.

(Live Chat Support): Chat live with online help representatives.

Visit my.chevrolet.com to register your vehicle.

Chevrolet Owner Centre (Canada) chevroletowner.ca

Take a trip to the Chevrolet Owner Centre:

- Chat live with online help representatives.
- Use the Vehicle Tools section.
- Access third party enthusiast sites and social media networks.
- Locate owner resources such as lease-end, financing, and warranty information.
- Retrieve your favorite articles, quizzes, tips, and multimedia galleries organized into the Features and Auto Care Sections.
- Download the owner manual for your vehicle, quickly and easily.
- Find the Chevrolet-recommended maintenance services for your vehicle.

GM Mobility Reimbursement Program

This program is available to qualified applicants for cost reimbursement of eligible aftermarket adaptive equipment required for the vehicle, such as hand controls or a wheelchair/scooter lift for the vehicle.

For more information on the limited offer, visit www.gmmobility.com or call the GM Mobility Assistance Center at 1-800-323-9935. Text Telephone (TTY) users, call 1-800-833-9935.

General Motors of Canada also has a Mobility Program. Visit www.gm.ca or call 1-800-GM-DRIVE (463-7483) for details. TTY users call 1-800-263-3830.

Roadside Assistance Program

For U.S.-purchased vehicles, call 1-800-243-8872. (Text Telephone (TTY): 1-888-889-2438.)

For Canadian-purchased vehicles, call 1-800-268-6800.

Service is available 24 hours a day, 365 days a year.

Calling for Assistance

When calling Roadside Assistance, have the following information ready:

- Your name, home address, and home telephone number.
- Telephone number of your location.
- Location of the vehicle.

- Model, year, color, and license plate number of the vehicle.
- Odometer reading, Vehicle Identification Number (VIN), and delivery date of the vehicle.
- Description of the problem.

Coverage

Services are provided up to 5 years/ 160 000 km (100,000 mi), whichever comes first.

In the U.S., anyone driving the vehicle is covered. In Canada, a person driving the vehicle without permission from the owner is not covered.

Roadside Assistance is not a part of the New Vehicle Limited Warranty. General Motors North America and Chevrolet reserve the right to make any changes or discontinue the Roadside Assistance program at any time without notification.

General Motors North America and Chevrolet reserve the right to limit services or payment to an owner or driver if they decide the claims are made too often, or the same type of claim is made many times.

Services Provided

- **Emergency Fuel Delivery:** Delivery of enough fuel for the vehicle to get to the nearest service station.
- **Lock-Out Service:** Service to unlock the vehicle if you are locked out. A remote unlock may be available if you have OnStar. For security reasons, the driver must present identification before this service is given.
- **Emergency Tow from a Public Road or Highway:** Tow to the nearest Chevrolet dealer for warranty service, or if the vehicle was in a crash and cannot be driven. Assistance is not given when the vehicle is stuck in the sand, mud, or snow.
- **Flat Tire Change:** Service to change a flat tire with the spare tire. The spare tire, if equipped, must be in good condition and properly inflated. It is the owner's responsibility for the repair or replacement of the tire if it is not covered by the warranty.
- **Battery Jump Start:** Service to jump start a dead battery.

Services Not Included in Roadside Assistance

- Impound towing caused by violation of any laws.
- Legal fines.
- Mounting, dismounting, or changing of snow tires, chains, or other traction devices.

Service is not provided if a vehicle is in an area that is not accessible to the service vehicle or is not a regularly traveled or maintained public road, which includes ice and winter roads. Off-road use is not covered.

Services Specific to Canadian-Purchased Vehicles

- **Fuel Delivery:** Reimbursement is up to 7 liters. Diesel fuel delivery may be restricted. Propane and other fuels are not provided through this service.
- **Lock-Out Service:** Vehicle registration is required.
- **Trip Interruption Benefits and Assistance:** Must be over 150 kilometers from where your trip was started to qualify. General Motors of Canada Limited requires pre-authorization, original detailed receipts, and a copy of the repair orders. Once authorization has been received, the Roadside Assistance advisor will help to make arrangements and explain how to receive payment.
- **Alternative Service:** If assistance cannot be provided right away, the Roadside Assistance advisor may give permission to get local emergency road service. You will receive payment, up to $100, after sending the original receipt to Roadside Assistance. Mechanical failures may be covered, however any cost for parts and labor for repairs not covered by the warranty are the owner responsibility.

Scheduling Service Appointments

When the vehicle requires warranty service, contact your dealer and request an appointment. By scheduling a service appointment and advising the service consultant of your transportation needs, your dealer can help minimize your inconvenience.

If the vehicle cannot be scheduled into the service department immediately, keep driving it until it can be scheduled for service, unless, of course, the problem is safety related. If it is, please call your dealership, let them know this, and ask for instructions.

If your dealer requests you to bring the vehicle for service, you are urged to do so as early in the work day as possible to allow for same-day repair.

Courtesy Transportation Program

To enhance your ownership experience, we and our participating dealers are proud to offer Courtesy Transportation, a customer support program for vehicles with the Bumper-to-Bumper (Base Warranty Coverage period in Canada), extended powertrain, and/or hybrid-specific warranties in both the U.S. and Canada.

Several Courtesy Transportation options are available to assist in reducing inconvenience when warranty repairs are required.

Courtesy Transportation is not a part of the New Vehicle Limited Warranty. A separate booklet entitled “Limited Warranty and Owner Assistance Information” furnished with each new vehicle provides detailed warranty coverage information.

Transportation Options

Warranty service can generally be completed while you wait. However, if you are unable to do so, your dealer may offer the following transportation options:

Shuttle Service

This includes one-way or round-trip shuttle service within reasonable time and distance parameters of your dealer's area.

Public Transportation or Fuel Reimbursement

If overnight warranty repairs are needed, and public transportation is used, the expense must be supported by original receipts and within the maximum amount allowed by GM for shuttle service. If U.S. customers arrange their own transportation, limited reimbursement for reasonable fuel expenses may be available. Claim amounts should reflect actual costs and be supported by original receipts. See your dealer for information.

Courtesy Rental Vehicle

For an overnight warranty repair, the dealer may provide an available courtesy rental vehicle or provide for reimbursement of a rental vehicle. Reimbursement is limited and must be supported by original receipts as well as a signed and completed rental agreement and meet state/provincial, local, and rental vehicle provider requirements. Requirements vary and may include minimum age requirements, insurance coverage, credit card, etc. Additional fees such as fuel usage charges, taxes, levies, usage fees, excessive mileage, or rental usage beyond the completion of the repair are also your responsibility. It may not be possible to provide a like vehicle as a courtesy rental.

Additional Program Information

All program options, such as shuttle service, may not be available at every dealer. Contact your dealer for specific availability.

General Motors reserves the right to unilaterally modify, change, or discontinue Courtesy Transportation at any time and to resolve all questions of claim eligibility pursuant to the terms and conditions described herein at its sole discretion.

Collision Damage Repair

If the vehicle is involved in a collision and it is damaged, have the damage repaired by a qualified technician using the proper equipment and quality replacement parts. Poorly performed collision repairs diminish the vehicle resale

value, and safety performance can be compromised in subsequent collisions.

Collision Parts

Genuine GM Collision parts are new parts made with the same materials and construction methods as the parts with which the vehicle was originally built. Genuine GM Collision parts are the best choice to ensure that the vehicle's designed appearance, durability, and safety are preserved. The use of Genuine GM parts can help maintain the GM New Vehicle Limited Warranty.

Recycled original equipment parts may also be used for repair. These parts are typically removed from vehicles that were total losses in prior crashes. In most cases, the parts being recycled are from undamaged sections of the vehicle. A recycled original equipment GM part may be an acceptable choice to maintain the vehicle's originally designed appearance and safety performance; however, the history of these parts is not known. Such parts are not covered by the GM New Vehicle Limited Warranty, and any related failures are not covered by that warranty.

Aftermarket collision parts are also available. These are made by companies other than GM and may not have been tested for the vehicle. As a result, these parts may fit poorly, exhibit premature durability/corrosion problems, and may not perform properly in subsequent collisions. Aftermarket parts are not covered by the GM New Vehicle Limited Warranty, and any vehicle failure related to such parts is not covered by that warranty.

Repair Facility

GM also recommends that you choose a collision repair facility that meets your needs before you ever need collision repairs. Your dealer may have a collision repair center with GM-trained technicians and state-of-the-art equipment, or be able to recommend a collision repair center that has GM-trained technicians and comparable equipment.

Insuring the Vehicle

Protect your investment in the GM vehicle with comprehensive and collision insurance coverage. There are significant differences in the quality of coverage afforded by various insurance policy terms. Many insurance policies provide reduced protection to the GM vehicle by limiting compensation for damage repairs through the use of aftermarket collision parts. Some insurance companies will not specify aftermarket collision parts. When purchasing insurance, we recommend that you ensure that the vehicle will be repaired with GM original equipment collision parts. If such insurance coverage is not available from your current insurance carrier, consider switching to another insurance carrier.

If the vehicle is leased, the leasing company may require you to have insurance that ensures repairs with Genuine GM Original Equipment Manufacturer (OEM) parts or Genuine Manufacturer replacement parts. Read the lease carefully, as you may be charged at the end of the lease for poor quality repairs.

If a Crash Occurs

If there has been an injury, call emergency services for help. Do not leave the scene of a crash until all matters have been taken care of. Move the vehicle only if its position puts you in danger, or you are instructed to move it by a police officer.

Give only the necessary information to police and other parties involved in the crash.

For emergency towing see *Roadside Assistance Program on page 13-5*.

Gather the following information:

- Driver name, address, and telephone number.
- Driver license number.
- Owner name, address, and telephone number.
- Vehicle license plate number.
- Vehicle make, model, and model year.
- Vehicle Identification Number (VIN).
- Insurance company and policy number.
- General description of the damage to the other vehicle.

Choose a reputable repair facility that uses quality replacement parts. See “Collision Parts” earlier in this section.

If the airbag has inflated, see *What Will You See after an Airbag Inflates? on page 3-19*.

Managing the Vehicle Damage Repair Process

In the event that the vehicle requires damage repairs, GM recommends that you take an active role in its repair. If you have a pre-determined repair facility of choice, take the vehicle there, or have it towed there. Specify to the facility that any required replacement collision parts be original equipment parts, either new Genuine GM parts or recycled original GM parts. Remember, recycled parts will not be covered by the GM vehicle warranty.

Insurance pays the bill for the repair, but you must live with the repair. Depending on your policy limits, your insurance company may initially value the repair using aftermarket parts. Discuss this with the repair professional, and insist on Genuine GM parts. Remember, if the vehicle is leased, you may be obligated to have the vehicle repaired with Genuine GM parts, even if your insurance coverage does not pay the full cost.

If another party's insurance company is paying for the repairs, you are not obligated to accept a repair valuation based on that insurance company's collision policy repair limits, as you have no contractual limits with that company. In such cases, you can have control of the repair and parts choices as long as the cost stays within reasonable limits.

Service Publications Ordering Information

Service Manuals

Service Manuals have the diagnosis and repair information on the engines, transmission, axle, suspension, brakes, electrical, steering, body, etc.

Service Bulletins

Service Bulletins give additional technical service information needed to knowledgeably service General Motors cars and trucks. Each bulletin contains instructions to assist in the diagnosis and service of the vehicle.

Owner Information

Owner publications are written specifically for owners and intended to provide basic operational information about the vehicle. The Owner Manual includes the Maintenance Schedule for all models.

In-Portfolio: Includes a Portfolio, Owner Manual, and Warranty Manual.

RETAIL SELL PRICE: $35.00 – $40.00 (U.S.) plus handling and shipping fees.

Without Pouch: Owner Manual only.

RETAIL SELL PRICE:
$25.00 (U.S.) plus handling and shipping fees.

Current and Past Models

Technical Service Bulletins and Manuals are available for current and past model GM vehicles.

ORDER TOLL FREE:
1-800-551-4123 Monday – Friday
8:00 AM – 6:00 PM Eastern Time

For Credit Card Orders Only (VISA-MasterCard-Discover), see Helm, Inc. at: www.helminc.com.

Or write to:

Helm, Incorporated
Attention: Customer Service
47911 Halyard Drive
Plymouth, MI 48170

Prices are subject to change without notice and without incurring obligation. Allow ample time for delivery.

All listed prices are quoted in U.S. funds. Make checks payable in U.S. funds.

Radio Frequency Identification (RFID)

RFID technology is used in some vehicles for functions such as tire pressure monitoring and ignition system security, as well as in

connection with conveniences such as Remote Keyless Entry (RKE) transmitters for remote door locking/unlocking and starting, and in-vehicle transmitters for garage door openers. RFID technology in GM vehicles does not use or record personal information or link with any other GM system containing personal information.

Radio Frequency Statement

This vehicle has systems that operate on a radio frequency that complies with Part 15/Part 18 of the Federal Communications Commission (FCC) rules and with Industry Canada Standards RSS-GEN/210/220/310.

Operation is subject to the following two conditions:

1. The device may not cause harmful interference.
2. The device must accept any interference received, including interference that may cause undesired operation of the device.

Changes or modifications to any of these systems by other than an authorized service facility could void authorization to use this equipment.

Reporting Safety Defects

Reporting Safety Defects to the United States Government

If you believe that your vehicle has a defect which could cause a crash or could cause injury or death, you should immediately inform the National Highway Traffic Safety Administration (NHTSA) in addition to notifying General Motors.

If NHTSA receives similar complaints, it may open an investigation, and if it finds that a safety defect exists in a group of vehicles, it may order a recall and remedy campaign. However, NHTSA cannot become involved in individual problems between you, your dealer, or General Motors.

To contact NHTSA, you may call the Vehicle Safety Hotline toll-free at 1-888-327-4236 (TTY: 1-800-424-9153); go to *http://www.safercar.gov;* or write to:

Administrator, NHTSA
1200 New Jersey Avenue, S.E.
Washington, D.C. 20590

You can also obtain other information about motor vehicle safety from *http://www.safercar.gov*.

Reporting Safety Defects to the Canadian Government

If you live in Canada, and you believe that the vehicle has a safety defect, notify Transport Canada immediately, and notify General Motors of Canada Limited. Call Transport Canada at 1-800-333-0510 or write to:

Transport Canada
Road Safety Branch
80 rue Noel
Gatineau , QC J8Z 0A1

Reporting Safety Defects to General Motors

In addition to notifying NHTSA (or Transport Canada) in a situation like this, notify General Motors.

Call 1-800-222-1020, or write:

Chevrolet Motor Division
Chevrolet Customer Assistance Center
P.O. Box 33170
Detroit, MI 48232-5170

In Canada, call 1-800-263-3777 (English) or 1-800-263-7854 (French), or write:

General Motors of Canada Limited
Customer Care Centre, Mail Code: CA1-163-005
1908 Colonel Sam Drive
Oshawa, Ontario L1H 8P7

Vehicle Data Recording and Privacy

The vehicle has a number of computers that record information about the vehicle's performance and how it is driven. For example, the vehicle uses computer modules to monitor and control engine and transmission performance, to monitor the conditions for airbag deployment and deploy them in a crash, and, if equipped, to provide antilock braking to help the driver control the vehicle. These modules may store data to help the dealer technician service the vehicle. Some modules may also store data about how the vehicle is operated, such as rate of fuel consumption or average speed. These modules may retain personal preferences, such as radio presets, seat positions, and temperature settings.

Event Data Recorders

This vehicle is equipped with an event data recorder (EDR). The main purpose of an EDR is to record, in certain crash or near crash-like situations, such as an air bag deployment or hitting a road obstacle, data that will assist in understanding how a vehicle's systems performed. The EDR is designed to record data related to vehicle dynamics and safety systems for a short period of time, typically 30 seconds or less. The EDR in this vehicle is designed to record such data as:

- How various systems in your vehicle were operating;
- Whether or not the driver and passenger safety belts were buckled/fastened;
- How far (if at all) the driver was depressing the accelerator and/or brake pedal; and,
- How fast the vehicle was traveling.

These data can help provide a better understanding of the circumstances in which crashes and injuries occur. NOTE: EDR data are recorded by your vehicle only if a non-trivial crash situation occurs; no data are recorded by the EDR under normal driving conditions and no personal data (e.g., name, gender, age, and crash location) are recorded. However, other parties, such as law enforcement, could combine the EDR data with the type of personally identifying data routinely acquired during a crash investigation.

To read data recorded by an EDR, special equipment is required, and access to the vehicle or the EDR is needed. In addition to the vehicle manufacturer, other parties, such as law enforcement, that have the special equipment, can read the information if they have access to the vehicle or the EDR.

GM will not access this data or share it with others except: with the consent of the vehicle owner or,

if the vehicle is leased, with the consent of the lessee; in response to an official request by police or similar government office; as part of GM's defense of litigation through the discovery process; or, as required by law. Data that GM collects or receives may also be used for GM research needs or may be made available to others for research purposes, where a need is shown and the data is not tied to a specific vehicle or vehicle owner.

OnStar®

If the vehicle is equipped with OnStar® and has an active subscription, additional data may be collected through the OnStar system. This includes information about the vehicle's operation; collisions involving the vehicle; the use of the vehicle and its features; and, in certain situations, the location and approximate GPS speed of the vehicle. Refer to the OnStar Terms and Conditions and Privacy Statement on the OnStar website.

Infotainment System

If the vehicle is equipped with a navigation system as part of the infotainment system, use of the system may result in the storage of destinations, addresses, telephone numbers, and other trip information. See the infotainment manual for information on stored data and for deletion instructions.

✍ NOTES

OnStar

OnStar Overview
OnStar Overview 14-1

OnStar Services
Emergency 14-3
Security 14-3
Navigation 14-3
Connections 14-4
Vehicle Diagnostics 14-6

OnStar Additional Information
OnStar Additional Information 14-6

OnStar Overview

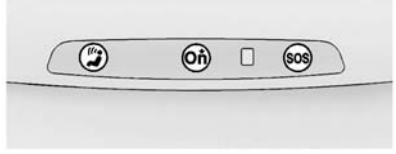

Manual Rearview Mirror

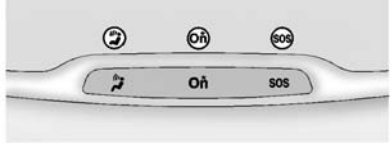

Automatic Dimming Rearview Mirror

Voice Command Button

Blue OnStar Button

Emergency Button

This vehicle may be equipped with a comprehensive, in-vehicle system that can connect to a live OnStar Advisor for Emergency, Security, Navigation, Connection, and Diagnostic Services. OnStar services may require a paid subscription. OnStar requires the vehicle battery and electrical system, cellular service, and GPS satellite signals to be available and operating. OnStar acts as a link to existing public emergency service providers. OnStar may collect information about you and your vehicle, including location information. See OnStar's Terms and Conditions and Privacy Statement for more details including system limitations at www.onstar.com (U.S.) or www.onstar.ca (Canada).

Manual and Automatic Dimming Rearview Mirrors

- Press the mirror controls. If OnStar does not respond, adjust finger position or remove any gloves.
- Avoid touching the controls while adjusting the mirror. To cancel a command press .

- Clean the mirror while the vehicle is off to avoid making calls.

Status Indicator

The OnStar system status light is next to the OnStar controls on the manual rearview mirror.

If the status light is:

- Solid Green: System is on.
- Flashing Green: On a call.
- Red: Indicates a problem.
- Off: System is off. Press the blue OnStar button twice to speak with an OnStar Advisor.

For the automatic dimming rearview mirror, the status is provided through the Display on Demand Icons.

- Three Color Icons: The system is enabled and active.
- No Icons: The vehicle is in motion or the OnStar subscription is inactive
- Blinking: Button has been pressed.
- Solid: On a call.
- ! (Fault Icon On): Indicates a problem.

OnStar Commands

Press or call 1-888-4-ONSTAR (1-888-466-7827) to speak to an Advisor.

Press to:

- Make a call, end a call, or answer an incoming call.
- Give OnStar Hands-Free Calling voice commands.
- Give OnStar Turn-by-Turn Navigation voice commands. Requires a specific OnStar subscription plan.
- Obtain the WiFi network name, or Service Set Identifier or SSID, and passphrase (if equipped).

Press to connect to a live Advisor to:

- Verify account information or update contact information.
- Get driving directions. Requires the available Requires a specific OnStar subscription plan.
- Receive On-Demand Diagnostics for a check of the vehicle's key operating systems.
- Receive Roadside Assistance.
- Manage WiFi Settings (if equipped).

Press the OnStar Emergency button SOS to get a priority connection to an Emergency Advisor available 24/7 to:

- Get help for an emergency.
- Be a Good Samaritan or respond to an AMBER Alert.
- Get assistance in severe weather or other crisis and get evacuation routes.

OnStar Services

Emergency

With Automatic Crash Response, the OnStar system can automatically connect to an OnStar Emergency Advisor. The built-in system can automatically connect to help in certain crashes.

Press SOS to connect to an OnStar Emergency Advisor. GPS technology is used to identify the vehicle location and can provide important information to emergency personnel. OnStar Emergency Advisors are trained to provide assistance and link to existing public emergency service providers in emergency situations.

With OnStar Crisis Assist, specially trained Crisis Advisors are available 24 hours a day, 7 days a week, to provide a central point of contact, assistance, and information if a crisis occurs.

Security

OnStar provides services including Stolen Vehicle Assistance, Remote Ignition Block, and Roadside Assistance, if equipped. OnStar can unlock the vehicle doors remotely, if equipped with automatic door locks, and can help police locate the vehicle if it is stolen.

Navigation

OnStar navigation requires a specific OnStar subscription plan.

Press On to receive directions or have them sent to the vehicle navigation screen, if equipped. Destinations can also be forwarded to the vehicle from MapQuest.com.

Turn-by-Turn Navigation

1. Press On to connect to a live Advisor.
2. Request directions.
3. Directions are downloaded to the vehicle.
4. Follow the voice-guided commands.

Using Voice Commands During a Planned Route

Cancel Route

1. Press . System responds: “OnStar ready,” then a tone. Say “Cancel route.” System responds: “Do you want to cancel directions?”
2. Say “Yes.” System responds: “OK, request completed, thank you, goodbye.”

Route Preview

1. Press . System responds: “OnStar ready,” then a tone.
2. Say “Route preview.” System responds with the next three maneuvers.

Repeat

1. Press . System responds: “OnStar ready,” then a tone.

2. Say “Repeat.” System responds with the last direction given, then responds with “OnStar ready,” then a tone.

Get My Destination

1. Press . System responds: “OnStar ready,” then a tone.
2. Say “Get my destination.” System responds with the address and the distance to the destination, then responds with “OnStar ready,” then a tone.

Other Navigation Services Available from OnStar

OnStar eNav: Subscribers can send destinations from MapQuest.com to the vehicle Turn-by-Turn Navigation or screen-based navigation system (if equipped). When ready, the directions will be downloaded to the vehicle.

Destination Download: Press , then request the Advisor to download directions to the navigation system in the vehicle (if equipped). After the call ends, press the “Go” button on the navigation screen to begin driving directions.

If directions are downloaded to the navigation system, the route can only be canceled through the navigation system.

Destinations can also be downloaded on the go. For information about eNav and Destination Download, see www.onstar.com (U.S.) or www.onstar.ca (Canada).

Connections

The required specific Onstar subscription plan includes the services that follow to help customers stay connected.

For coverage maps, see www.onstar.com (U.S.) or www.onstar.ca (Canada).

WiFi Connectivity (If Equipped)

The vehicle has a WiFi hotspot that provides a high-speed, wireless Internet connection to connect multiple mobile devices (data plan required).

1. To retrieve WiFi hotspot information, press and select or say “WiFi settings.”
2. The WiFi settings will display the WiFi network name/SSID, passphrase, and level of encryption.
3. To change the SSID or passphrase, press or call 1-888-4-ONSTAR to connect with an Advisor.

OnStar RemoteLink® Mobile App (If Equipped)

Download the OnStar RemoteLink mobile app to select Apple®, Android™, and BlackBerry® or Windows 7 or 8 mobile devices. From the mobile device, check the vehicle’s fuel level, oil life, or tire

pressure (if the vehicle is equipped with the tire pressure monitoring system); or activate remote horn and lights. Also remote start the vehicle (if factory equipped) or unlock the doors from anywhere with a wireless connection (if equipped with automatic locks). With the required specific OnStar service plan, a destination can be sent to the vehicle. For OnStar RemoteLink information and compatibility, see www.onstar.com (U.S.) or www.onstar.ca (Canada).

OnStar RemoteLink® Key Fob Services

This feature is included for five years and allows for remote door lock/unlock (if equipped with automatic locks), remote start (if factory equipped), or activation of horn and lights from anywhere with a wireless signal. Download the app and start using it any time during the trial period to get started.

OnStar Hands-Free Calling

This service allows calls to be made and received from the vehicle.

To Make a Call

1. Press ⓗ. System responds: “OnStar ready.”
2. Say “Call.” System responds: “Call. Please say the name or number to call.”
3. Say the entire number without pausing, including a “1” and the area code. System responds: “OK calling.”

Calling 911 Emergency

1. Press ⓗ. System responds: “OnStar Ready,” followed by a tone.
2. Say “Call.” System responds: “Call. Please say the name or number to call.”
3. Say “911” without pausing. System responds: “911.”
4. Say “Call.” System responds: “OK, dialing 911.”

Retrieve My Number

1. Press ⓗ. System responds: “OnStar ready.”
2. Say “My number.” System responds: “Your OnStar Hands-Free Calling number is,” then says the number.

End a Call

Press ⓗ. System responds: “Call ended.”

Store a Name Tag for Speed Dialing

1. Press ⓗ. System responds: “OnStar ready.”
2. Say “Store.” System responds: “Please say the number you would like to store.”
3. Say the entire number without pausing. System responds: “Please say the name tag.”

4. Pick a name tag. System responds: “About to store <name tag>. Does that sound OK?”
5. Say “Yes” or “No” to try again. System responds: “OK, storing <name tag>.”

Place a Call Using a Stored Number

1. Press . System responds: “OnStar ready.”
2. Say “Call <name tag>.” System responds: “OK, calling <name tag>.”

Verify Minutes and Expiration

Press and say “Minutes” then “Verify” to check how many minutes remain and their expiration date.

Vehicle Diagnostics

OnStar Vehicle Diagnostics can perform a vehicle check every month. It will check the engine, transmission, antilock brakes, and other major vehicle systems. It also checks the tire pressures, if the vehicle is equipped with the Tire Pressure Monitoring System. If an On-Demand Diagnostics check is needed, press , and an Advisor can run a check.

OnStar Additional Information

Transferring Service

Press to request account transfer eligibility information. The Advisor can assist in canceling or removing account information.

Selling/Transferring the Vehicle

Call 1-888-4-ONSTAR immediately to terminate your OnStar services if the vehicle is disposed of, sold, transferred, or if the lease ends.

Reactivation for Subsequent Owners

Press and follow the prompts to speak to an Advisor as soon as possible. The Advisor will update vehicle records and explain the OnStar service options available.

How OnStar Service Works

Automatic Crash Response, Emergency Services, Crisis Assist, Stolen Vehicle Assistance, Vehicle Diagnostics, Remote Door Unlock, Roadside Assistance, Turn-by-Turn Navigation, and Hands-Free Calling are available on most vehicles. Not all OnStar services are available everywhere or on all vehicles. For more information, a full description of OnStar services, system limitations, and OnStar terms and conditions:

- Call 1-888-4-ONSTAR. (1-888-466-7827).
- See www.onstar.com (U.S.).
- See www.onstar.ca (Canada).
- Call TTY 1-877-248-2080.
- Press ⓪ to speak with an Advisor.

OnStar services cannot work unless the vehicle is in a place where OnStar has an agreement with a wireless service provider for service in that area. The wireless service provider must also have coverage, network capacity, reception, and technology compatible with OnStar services. Service involving location information about the vehicle cannot work unless GPS signals are available, unobstructed, and compatible with the OnStar hardware. OnStar services may not work if the OnStar equipment is not properly installed or it has not been properly maintained. If equipment or software is added, connected, or modified, OnStar services may not work. Other problems beyond the control of OnStar may prevent service such as hills, tall buildings, tunnels, weather, electrical system design and architecture of the vehicle, damage to the vehicle in a crash, or wireless phone network congestion or jamming.

See *Radio Frequency Statement on page 13-12*.

Services for People with Disabilities

Advisors provide services to help subscribers with physical disabilities and medical conditions.

Press ⓪ for help with:

- Locating a gas station with an attendant to pump gas.
- Finding a hotel, restaurant, etc., that meets accessibility needs.
- Providing directions to the closest hospital or pharmacy in urgent situations.

TTY Users

OnStar has the ability to communicate to deaf, hard-of-hearing, or speech-impaired customers while in the vehicle. The available dealer-installed TTY system can provide in-vehicle access to all of the OnStar services, except Virtual Advisor and OnStar Turn-by-Turn Navigation.

OnStar Personal Identification Number (PIN)

A PIN is needed to access some of the OnStar services, like Remote Door Unlock and Stolen Vehicle Assistance. The PIN will need to be changed the first time when speaking with an Advisor. To change the OnStar PIN contact an OnStar Advisor by pressing ⓞⓝ or calling 1-888-4-ONSTAR.

Warranty

OnStar equipment may be warranted as part of the vehicle warranty.

Languages

The vehicle can be programmed to respond in multiple languages. Press ⓞⓝ and ask for an Advisor. Advisors are available in English, Spanish, and French. Available languages may vary by country.

Potential Issues

OnStar cannot perform Remote Door Unlock or Stolen Vehicle Assistance after the vehicle has been off continuously for five days. After five days, OnStar can contact Roadside Assistance and a locksmith to help gain access to the vehicle.

Global Positioning System (GPS)

- Obstruction of the GPS can occur in a large city with tall buildings; in parking garages; around airports; in tunnels, underpasses, or parking garages; or in an area with very dense trees. If GPS signals are not available, the OnStar system should still operate to call OnStar. However, OnStar could have difficulty identifying the exact location.
- In emergency situations, OnStar can use the last stored GPS location to send to emergency responders.

A temporary loss of GPS can cause loss of the ability to send a Turn-by-Turn Navigation route. The Advisor may give a verbal route or may ask for a call back after the vehicle is driven into an open area.

Cellular and GPS Antennas

Do not place items over or near the antenna to prevent blocking cellular and GPS signal reception. Cellular reception is required for OnStar to send remote signals to the vehicle.

Unable to Connect to OnStar Message

If there is limited cellular coverage or the cellular network has reached maximum capacity, this message may come on. Press ⓞⓝ to try the call again or try again after driving a few miles into another cellular area.

Vehicle and Power Issues

OnStar services require a vehicle electrical system, wireless service, and GPS satellite technologies to be available and operating for features to function properly. These systems may not operate if the battery is discharged or disconnected.

Add-on Electrical Equipment

The OnStar system is integrated into the electrical architecture of the vehicle. Do not add any electrical equipment. See *Add-On Electrical Equipment on page 9-57*. Added electrical equipment may interfere with the operation of the OnStar system and cause it to not operate.

Privacy

The complete OnStar Privacy Statement may be found at www.onstar.com (U.S.), or www.onstar.ca (Canada). We recommend that you review it. If you have any questions, call 1-888-4-ONSTAR (1-888-466-7827) or press On to speak with an Advisor. Users of wireless communications are cautioned that the privacy of any information sent via wireless cellular communications cannot be assured. Third parties may unlawfully intercept or access transmissions and private communications without consent.

OnStar - software acknowledgements

Certain OnStar components include libcurl and unzip software and other third party software. Below are the notices and licenses associated with libcurl and unzip and for other third party software please see http://www.lg.com/global/support/opensource/index and https://www.onstar.com/web/portal/getdocuments

libcurl:

COPYRIGHT AND PERMISSION NOTICE

Copyright (c) 1996 - 2010, Daniel Stenberg, <daniel@haxx.se>.

All rights reserved.

Permission to use, copy, modify, and distribute this software for any purpose with or without fee is hereby granted, provided that the above copyright notice and this permission notice appear in all copies.

THE SOFTWARE IS PROVIDED “AS IS,” WITHOUT WARRANTY OF ANY KIND, EXPRESS OR IMPLIED, INCLUDING BUT NOT LIMITED TO THE WARRANTIES OF MERCHANTABILITY, FITNESS FOR A PARTICULAR PURPOSE AND NONINFRINGEMENT OF THIRD PARTY RIGHTS. IN NO EVENT SHALL THE AUTHORS OR COPYRIGHT HOLDERS BE LIABLE FOR ANY CLAIM, DAMAGES OR OTHER LIABILITY, WHETHER IN AN ACTION OF CONTRACT, TORT OR OTHERWISE, ARISING FROM, OUT OF OR IN CONNECTION WITH THE SOFTWARE OR THE USE OR OTHER DEALINGS IN THE SOFTWARE.

Except as contained in this notice, the name of a copyright holder shall not be used in advertising or otherwise to promote the sale, use or other dealings in this Software without prior written authorization of the copyright holder.

unzip:

This is version 2005-Feb-10 of the Info-ZIP copyright and license. The definitive version of this document should be available at ftp://ftp.info-zip.org/pub/infozip/license.html indefinitely.

Copyright (c) 1990-2005 Info-ZIP. All rights reserved.

For the purposes of this copyright and license, “Info-ZIP” is defined as the following set of individuals:

Mark Adler, John Bush, Karl Davis, Harald Denker, Jean-Michel Dubois, Jean-loup Gailly, Hunter Goatley, Ed Gordon, Ian Gorman, Chris Herborth, Dirk Haase, Greg Hartwig, Robert Heath, Jonathan Hudson, Paul Kienitz, David Kirschbaum, Johnny Lee, Onno van der Linden, Igor Mandrichenko, Steve P. Miller, Sergio Monesi, Keith Owens, George Petrov, Greg Roelofs, Kai Uwe Rommel, Steve Salisbury, Dave Smith, Steven M. Schweda, Christian Spieler, Cosmin Truta, Antoine Verheijen, Paul von Behren, Rich Wales, Mike White.

This software is provided “as is,” without warranty of any kind, express or implied. In no event shall Info-ZIP or its contributors be held liable for any direct, indirect, incidental, special or consequential damages arising out of the use of or inability to use this software.

Permission is granted to anyone to use this software for any purpose, including commercial applications, and to alter it and redistribute it freely, subject to the following restrictions:

1. Redistributions of source code must retain the above copyright notice, definition, disclaimer, and this list of conditions.
2. Redistributions in binary form (compiled executables) must reproduce the above copyright notice, definition, disclaimer, and this list of conditions in documentation and/or other materials provided with the distribution. The sole exception to this condition is redistribution of a standard UnZipSFX binary (including SFXWiz) as part of a self-extracting archive; that is permitted without inclusion of this license, as long as the normal SFX banner has not been removed from the binary or disabled.
3. Altered versions–including, but not limited to, ports to new operating systems, existing ports with new graphical interfaces, and dynamic, shared, or static library versions–must be plainly marked as such and must not be misrepresented as being the original source. Such altered versions also must not be misrepresented as being

Info-ZIP releases–including, but not limited to, labeling of the altered versions with the names “Info-ZIP” (or any variation thereof, including, but not limited to, different capitalizations), “Pocket UnZip,” “WiZ” or “MacZip” without the explicit permission of Info-ZIP. Such altered versions are further prohibited from misrepresentative use of the Zip-Bugs or Info-ZIP e-mail addresses or of the Info-ZIP URL(s).

4. Info-ZIP retains the right to use the names “Info-ZIP,” “Zip,” “UnZip,” “UnZipSFX,” “WiZ,” “Pocket UnZip,” “Pocket Zip,” and “MacZip” for its own source and binary releases.

✍ NOTES

A

Accessories and Modifications 10-2
Accessory Power 9-23
Active Fuel Management® 9-25
Active Rev Match 9-33
Add-On Electrical Equipment 9-57
Additional Information
OnStar® 14-6
Additional Maintenance and Care 11-9
Adjustments
Lumbar, Front Seats 3-3
Air Cleaner/Filter, Engine 10-20
Air Dam, Front 9-19
Air Filter, Passenger Compartment 8-5
Air Vents 8-5
Airbag System
Check 3-25
How Does an Airbag Restrain? 3-18
Passenger Sensing System 3-20
Airbag System (cont'd)
What Makes an Airbag Inflate? 3-18
What Will You See after an Airbag Inflates? 3-19
When Should an Airbag Inflate? 3-17
Where Are the Airbags? 3-16
Airbags
Adding Equipment to the Vehicle 3-25
Passenger Status Indicator . . . 5-17
Readiness Light 5-16
Servicing Airbag-Equipped Vehicles 3-24
System Check 3-15
Alarm
Vehicle Security 2-16
Antilock Brake System (ABS) 9-34
Warning Light 5-22
Appearance Care
Exterior 10-82
Interior 10-87
Assistance Program, Roadside 13-5
Automatic
Dimming Mirrors 2-20
Door Locks 2-13
Headlamp System 6-3
Transmission 9-27
Transmission Fluid 10-19
Automatic Transmission
Manual Mode 9-28
Shift Lock Control Function Check 10-35
Axle, Rear 10-34

B

Battery 10-33
Exterior Lighting Battery Saver 6-7
Jump Starting 10-79
Power Protection 6-6
Voltage and Charging Messages 5-34
Blade Replacement, Wiper . . . 10-36
Boost Gauge 5-14
Brake
Parking, Electric 9-35
System Warning Light 5-21

Brakes 10-29
Antilock 9-34
Assist 9-36
Fluid 10-32
System Messages 5-34
Break-In, New Vehicle 9-18
Bulb Replacement 10-38
Headlamp Aiming 10-37
Headlamps 10-37
High Intensity Discharge (HID) Lighting 10-37
License Plate Lamps 10-38
Buying New Tires 10-63

C

Calibration 5-3
California
Fuel Requirements 9-54
Perchlorate Materials Requirements 10-2
Warning 10-2
Camera
Rear Vision (RVC) 9-51
Canadian Vehicle Owners iii
Capacities and Specifications 12-2
Carbon Fiber 9-19
Carbon Monoxide
Engine Exhaust 9-26
Hatch 2-14
Winter Driving 9-12
Cargo
Cover 4-4
Cautions, Danger, and Warnings iv
Center Console Storage 4-3
Chains, Tire 10-68
Charging System Light 5-18
Check
Engine Light 5-18
Child Restraints
Infants and Young Children 3-28
Lower Anchors and Tethers for Children 3-32
Older Children 3-26
Securing 3-33
Systems 3-31
Cleaning
Exterior Care 10-82
Interior Care 10-87
Climate Control Systems
Dual Automatic 8-1
Clock 5-4
Cluster, Instrument 5-7
Clutch, Hydraulic 10-19
Collision Damage Repair 13-8
Compartments
Storage 4-1
Compass 5-3
Messages 5-35
Competition Oriented Tires . . . 10-49
Competitive Driving Mode 9-43
Compressor Kit, Tire Sealant 10-70
Connections
OnStar® 14-4
Control
Traction and Electronic Stability 9-37
Control of a Vehicle 9-3
Convenience Net 4-5
Convertible Top 2-27
Messages 5-35
Convex Mirrors 2-19

Coolant
Engine 10-24
Engine Temperature
Gauge 5-15
Engine Temperature
Warning Light 5-23
Cooling System 10-22, 10-23
Engine Messages 5-37
Courtesy Lamps 6-5
Courtesy Transportation
Program 13-7
Cover
Cargo 4-4
Cruise Control 9-48
Light 5-26
Messages 5-36
Cupholders 4-2
Customer Assistance 13-4
Offices 13-3
Text Telephone (TTY)
Users 13-4
Customer Information
Service Publications
Ordering Information 13-11
Customer Satisfaction
Procedure 13-1

D

Damage Repair, Collision 13-8
Danger, Warnings, and
Cautions iv
Data Recorder
Performance 7-1
Data Recorders, Event 13-14
Daytime Running
Lamps (DRL) 6-2
Defensive Driving 9-3
Delayed Locking 2-13
Differential, Limited-Slip 9-47
Distracted Driving 9-2
Door
Ajar Light 5-26
Ajar Messages 5-36
Delayed Locking 2-13
Locks 2-11
Power Locks 2-13
Drive Belt Routing, Engine 12-4
Driver Information
Center (DIC) 5-26
Driver Mode Control 9-39
Driving
Defensive 9-3
Drunk 9-3
For Better Fuel Economy 1-21
Hill and Mountain Roads 9-11
If the Vehicle is Stuck 9-13
Loss of Control 9-4
Off-Road Recovery 9-4
Track Events and
Competitive 9-5
Vehicle Load Limits 9-14
Wet Roads 9-10
Winter 9-12
Driving Mode
Competitive 9-43
Dual Automatic Climate
Control System 8-1

E

Electric Parking Brake 9-35
Electric Parking Brake Light . . . 5-21
Electrical Equipment,
Add-On 9-57

Electrical System
Engine Compartment
Fuse Block 10-39
Fuses 10-39
Overload 10-39
Rear Compartment Fuse
Block 10-43
Emergency
OnStar® 14-3
Engine
Air Cleaner/Filter 10-20
Check and Service Engine
Soon Light 5-18
Compartment Overview 10-7
Coolant 10-24
Coolant Temperature
Gauge 5-15
Coolant Temperature
Warning Light 5-23
Cooling System 10-22, 10-23
Cooling System Messages ...5-37
Drive Belt Routing 12-4
Exhaust 9-26
Oil Life System 10-18
Oil Messages 5-37
Overheating 10-27
Engine (cont'd)
Power Messages 5-38
Pressure Light 5-24
Running While Parked 9-26
Starting 9-21
Entry Lighting 6-6
Event Data Recorders 13-14
Exit Lighting 6-6
Extender, Safety Belt 3-13
Exterior Lamp Controls 6-1
Exterior Lamps Off Reminder ... 6-2
Exterior Lighting Battery
Saver 6-7

F

Features
Memory 1-9
Filter,
Engine Air Cleaner 10-20
Flash-to-Pass 6-2
Flashers, Hazard Warning 6-4
Flat Tire 10-69
Floor Mats 10-91
Fluid
Automatic Transmission 10-19
Brakes 10-32
Washer 10-28
Folding Mirrors 2-20
Frequency Statement
Radio 13-12
Front Air Dam 9-19
Front Seats
Heated and Ventilated 3-7
Fuel 9-53
Additives 9-54
Economy Driving 1-21
Filling a Portable Fuel
Container 9-56
Filling the Tank 9-55
Foreign Countries 9-54
Gauge 5-13
Low Fuel Warning Light 5-25
Management, Active 9-25
Requirements, California 9-54
System Messages 5-38

Fuses 10-39
Engine Compartment Fuse Block 10-39
Rear Compartment Fuse Block 10-43

G

Garage Door Opener 5-52
Programming 5-52
Gauges
Boost 5-14
Engine Coolant Temperature 5-15
Fuel 5-13
Odometer 5-12
Speedometer 5-12
Tachometer 5-12
Trip Odometer 5-12
Warning Lights and Indicators 5-6
General Information
Service and Maintenance 11-1
Towing 9-57
Vehicle Care 10-2
Glove Box 4-2
GM Mobility Reimbursement Program 13-5

H

Hatch 2-14
Hazard Warning Flashers 6-4
Head Restraints 3-2
Head-up Display 5-29
Headlamps
Aiming 10-37
Automatic 6-3
Bulb Replacement 10-37
Daytime Running Lamps (DRL) 6-2
Flash-to-Pass 6-2
High Intensity Discharge (HID) Lighting 10-37
High-Beam On Light 5-25
High/Low Beam Changer 6-2
Lamps On Reminder 5-26
Heated and Ventilated Front Seats 3-7
Heated Mirrors 2-20
High-Beam On Light 5-25
High-Speed Operation 10-57
Hill and Mountain Roads 9-11
Hill Start Assist (HSA) 9-37
Hood 10-6
Horn 5-2
How to Wear Safety Belts Properly 3-10
Hydraulic Clutch 10-19

I

Ignition Positions 9-19
Immobilizer 2-18
Infants and Young Children, Restraints 3-28
Infotainment 7-1
Infotainment System 13-15
Instrument Cluster 5-7
Instrument Panel Storage Area 4-1
Interior Rearview Mirrors 2-21
Introduction iii

J

Jump Starting 10-79

K

Key and Lock Messages 5-38
Keyless Entry
  Remote (RKE) System 2-3
Keys 2-1

L

Labeling, Tire Sidewall 10-51
Lamps
  Courtesy 6-5
  Daytime Running (DRL) 6-2
  Exterior Controls 6-1
  Exterior Lamps Off
    Reminder 6-2
  Exterior Lighting Battery
    Saver 6-7
  License Plate 10-38
  Malfunction Indicator 5-18
Lamps (cont'd)
  Messages 5-39
  On Reminder 5-26
  Reading 6-6
Lap-Shoulder Belt 3-11
LATCH, Lower Anchors and
  Tethers for Children 3-32
Latches, Seatback 3-6
LED Lighting 10-38
Lifting the Vehicle, Tires 10-3
Lighting
  Entry 6-6
  Exit 6-6
  Illumination Control 6-5
  LED 10-38
Lights
  Airbag Readiness 5-16
  Antilock Brake System
    (ABS) Warning 5-22
  Brake System Warning 5-21
  Charging System 5-18
  Cruise Control 5-26
  Door Ajar 5-26
  Electric Parking Brake 5-21
  Engine Coolant
    Temperature Warning 5-23
  Engine Oil Pressure 5-24
Lights (cont'd)
  Flash-to-Pass 6-2
  High-Beam On 5-25
  High/Low Beam Changer 6-2
  Low Fuel Warning 5-25
  Safety Belt Reminders 5-15
  Security 5-25
  Service Electric Parking
    Brake 5-21
  StabiliTrak® OFF 5-23
  Tire Pressure 5-24
  Traction Control System
    (TCS)/StabiliTrak® 5-23
  Traction Off 5-22
Limited-Slip Differential 9-47
Locks
  Automatic Door 2-13
  Delayed Locking 2-13
  Door 2-11
  Lockout Protection 2-14
  Power Door 2-13
Loss of Control 9-4
Low Fuel Warning Light 5-25
Low-Profile Tires 10-49
Lower Anchors and Tethers
  for Children (LATCH
  System) 3-32

Lumbar Adjustment 3-3
Front Seats 3-3

M

Maintenance
Records 11-15
Maintenance and Care
Additional 11-9
Maintenance Schedule 11-2
Recommended Fluids
and Lubricants 11-12
Malfunction Indicator Lamp 5-18
Manual Mode 9-28
Manual Transmission 9-31
Fluid 10-19
Matching
Active Rev 9-33
Memory Features 1-9
Memory Seats 3-4
Messages
Airbag System 5-42
Battery Voltage and
Charging 5-34
Brake System 5-34
Compass 5-35
Convertible Top 5-35
Messages (cont'd)
Door Ajar 5-36
Engine Cooling System 5-37
Engine Oil 5-37
Engine Power 5-38
Fuel System 5-38
Key and Lock 5-38
Lamp 5-39
Ride Control System 5-39
Security 5-42
Service Vehicle 5-42
Starting the Vehicle 5-43
Tire 5-43
Transmission 5-44
Vehicle 5-34
Vehicle Reminder 5-44
Vehicle Speed 5-44
Washer Fluid 5-45
Window 5-45
Mirrors
Automatic Dimming 2-20
Automatic Dimming
Rearview 2-21
Convex 2-19
Folding 2-20
Heated 2-20
Mirrors (cont'd)
Manual Rearview 2-21
Power 2-20
Tilt in Reverse 2-20
Mirrors, Interior Rearview 2-21
Mode
Driver Control 9-39
Monitor System, Tire
Pressure 10-57

N

Navigation
OnStar® 14-3
Net, Convenience 4-5
New Vehicle Break-In 9-18

O

Odometer 5-12
Trip 5-12
Off-Road
Recovery 9-4

Oil
Engine 10-12
Engine Oil Life System 10-18
Messages 5-37
Pressure Light 5-24
Older Children, Restraints 3-26
Online Owner Center 13-4
OnStar 13-15
OnStar®
System, In Brief 1-22
OnStar® Additional
Information 14-6
OnStar® Connections 14-4
OnStar® Emergency 14-3
OnStar® Navigation 14-3
OnStar® Overview 14-1
OnStar® Security 14-3
OnStar® Vehicle
Diagnostics 14-6
Ordering
Service Publications 13-11
Outlets
Power 5-4
Overheating, Engine 10-27

P

Panel, Roof 2-24
Park
Shifting Into 9-23
Shifting Out of 9-24
Parking 9-25
Brake and P (Park)
Mechanism Check 10-36
Over Things That Burn 9-25
Passenger Airbag Status
Indicator 5-17
Passenger Compartment Air
Filter 8-5
Passenger Sensing System . . . 3-20
Perchlorate Materials
Requirements, California 10-2
Performance Data
Recorder (PDR) 7-1
Personalization
Vehicle 5-45
Power
Door Locks 2-13
Mirrors 2-20
Outlets 5-4
Protection, Battery 6-6
Power (cont'd)
Retained Accessory (RAP) . . . 9-23
Seat Adjustment 3-2
Windows 2-22
Pregnancy, Using Safety
Belts 3-13
Privacy
Vehicle Data Recording 13-14
Program
Courtesy Transportation 13-7
Proposition 65 Warning,
California 10-2

R

Radio Frequency
Identification (RFID) 13-11
Radio Frequency
Statement 13-12
Reading Lamps 6-6
Rear Axle 10-34
Rear Storage 4-2
Rear Vision Camera (RVC) 9-51
Rearview Mirrors 2-21
Automatic Dimming 2-21
Reclining Seatbacks 3-3

Recommended Fluids and Lubricants 11-12
Records
Maintenance 11-15
Recreational Vehicle Towing 10-82
Reimbursement Program, GM Mobility 13-5
Remote Keyless Entry (RKE) System 2-2, 2-3
Remote Vehicle Start 2-9
Replacement Bulbs 10-38
Replacement Parts
Airbags 3-26
Maintenance 11-13
Replacing Airbag System 3-26
Replacing Safety Belt System Parts after a Crash . . . 3-14
Reporting Safety Defects
Canadian Government 13-13
General Motors 13-13
U.S. Government 13-12
Retained Accessory Power (RAP) 9-23
Reverse Tilt Mirrors 2-20
Ride Control Systems
Enhanced Traction System (ETS) 9-47
Messages 5-39
Roads
Driving, Wet 9-10
Roadside Assistance Program 13-5
Roof Panel 2-24
Rotation, Tires 10-61
Routing, Engine Drive Belt 12-4
Run-Flat Tires 10-48
Running the Vehicle While Parked 9-26

S

Safety Belts 3-8
Care 3-14
Extender 3-13
How to Wear Safety Belts Properly 3-10
Lap-Shoulder Belt 3-11
Reminders 5-15
Replacing after a Crash 3-14
Use During Pregnancy 3-13
Safety Defects Reporting
Canadian Government 13-13
General Motors 13-13
U.S. Government 13-12
Safety System Check 3-13
Scheduling Appointments 13-7
Sealant Kit, Tire 10-70
Seatback Latches 3-6
Seats
Head Restraints 3-2
Heated and Ventilated Front . . . 3-7
Lumbar Adjustment, Front 3-3
Memory 3-4
Power Adjustment, Front 3-2
Reclining Seatbacks 3-3
Securing Child Restraints 3-33
Security
Light 5-25
Messages 5-42
OnStar® 14-3
Vehicle 2-16
Vehicle Alarm 2-16

Service
Accessories and Modifications 10-2
Doing Your Own Work 10-5
Engine Soon Light 5-18
Maintenance Records 11-15
Maintenance, General Information 11-1
Parts Identification Label 12-1
Publications Ordering Information 13-11
Scheduling Appointments 13-7
Vehicle Messages 5-42
Service Electric Parking Brake Light 5-21
Services
Special Application 11-8
Servicing the Airbag 3-24
Shift Lock Control Function Check, Automatic Transmission 10-35
Shifting
Into Park 9-23
Out of Park 9-24
Signals, Turn and Lane-Change 6-5
Special Application Services . . . 11-8
Specifications and Capacities 12-2
Speedometer 5-12
StabiliTrak OFF Light 5-23
Start Assist, Hills 9-37
Start Vehicle, Remote 2-9
Starter Switch Check 10-35
Starting the Engine 9-21
Starting the Vehicle Messages 5-43
Steering 9-3
Wheel Adjustment 5-2
Wheel Controls 5-2
Storage
Rear 4-2
Storage Areas
Cargo Cover 4-4
Center Console 4-3
Convenience Net 4-5
Glove Box 4-2
Instrument Panel 4-1
Storage Compartments 4-1
Storing the Tire Sealant and Compressor Kit 10-78
Stuck Vehicle 9-13
Summer Tires 10-50
Sun Visors 2-23
Symbols iv
System
Infotainment 7-1, 13-15

T

Tachometer 5-12
Text Telephone (TTY) Users . . . 13-4
Theft-Deterrent Systems 2-18
Immobilizer 2-18
Time 5-4
Tires 10-46
Buying New Tires 10-63
Chains 10-68
Competition Oriented 10-49
Designations 10-52
Different Size 10-65
If a Tire Goes Flat 10-69
Inflation Monitor System 10-58
Inspection 10-61
Lifting the Vehicle 10-3
Low Profile 10-49
Messages 5-43
Pressure 10-57

Tires (cont'd)
Pressure Light 5-24
Pressure Monitor System ... 10-57
Rotation 10-61
Run-Flat 10-48
Sealant and
Compressor Kit 10-70
Sealant and Compressor
Kit, Storing 10-78
Sidewall Labeling 10-51
Terminology and
Definitions 10-53
Uniform Tire Quality
Grading 10-65
Wheel Alignment and Tire
Balance 10-67
Wheel Replacement 10-67
When It Is Time for New
Tires 10-62
Winter 10-47
Towing
General Information 9-57
Recreational Vehicle 10-82
Vehicle 10-82
Track Events and
Competitive Driving 9-5
Traction
Control System (TCS)/
StabiliTrak® Light 5-23
Limited-Slip Differential 9-47
Off Light 5-22
Traction Control/Electronic
Stability Control 9-37
Transmission
Automatic 9-27
Fluid, Automatic 10-19
Fluid, Manual 10-19
Messages 5-44
Transportation Program,
Courtesy 13-7
Trip Odometer 5-12
Turn and Lane-Change
Signals 6-5

U

Uniform Tire Quality
Grading 10-65
Universal Remote System 5-52
Operation 5-55
Programming 5-52
Using This Manual iii

V

Vehicle
Alarm System 2-16
Canadian Owners iii
Control 9-3
Identification
Number (VIN) 12-1
Load Limits 9-14
Messages 5-34
Personalization 5-45
Reminder Messages 5-44
Remote Start 2-9
Security 2-16
Speed Messages 5-44
Towing 10-82
Vehicle Care
Storing the Tire Sealant
and Compressor Kit 10-78
Tire Pressure 10-55
Vehicle Data Recording
and Privacy 13-14
Vehicle Diagnostics
OnStar® 14-6
Ventilation, Air 8-5
Visors 2-23

W

Warning
Brake System Light 5-21
Warning Lights, Gauges, and Indicators 5-6
Warnings iv
Cautions and Danger iv
Hazard Flashers 6-4
Washer Fluid 10-28
Messages 5-45
Wheels
Alignment and Tire Balance 10-67
Different Size 10-65
Replacement 10-67
When It Is Time for New Tires 10-62
Windows 2-21
Messages 5-45
Power 2-22
Windshield
Replacement 10-37
Wiper/Washer 5-2
Winter
Driving 9-12
Winter Tires 10-47
Wiper Blade Replacement 10-36