Service Training

Self-study Programme 390

The 7-speed Double-clutch Gearbox 0AM

Design and Function

The new 7-speed double-clutch gearbox from Volkswagen

The 7-speed double-clutch gearbox 0AM is a further development of the very successful direct-shift gearbox 02E from Volkswagen.
In terms of comfort and shifting without interrupting drive, it offers the same as the direct-shift gearbox 02E.
It has been designed for engines with a torque of up to 250 Nm in the Polo, Golf, Passat and Touran.

Whilst the direct-shift gearbox is on a par with vehicles with manual gearbox in terms of fuel consumption, the double-clutch gearbox has succeeded in reducing fuel consumption below that of manual gearboxes by means of certain technical innovations in the gearbox.

This reduction in fuel consumption makes a significant contribution towards lowering emissions and safeguarding the environment.

In this self-study programme, you can find out how the new double-clutch gearbox functions and which technical highlights have helped to reduce fuel consumption.

We hope you enjoy reading it.

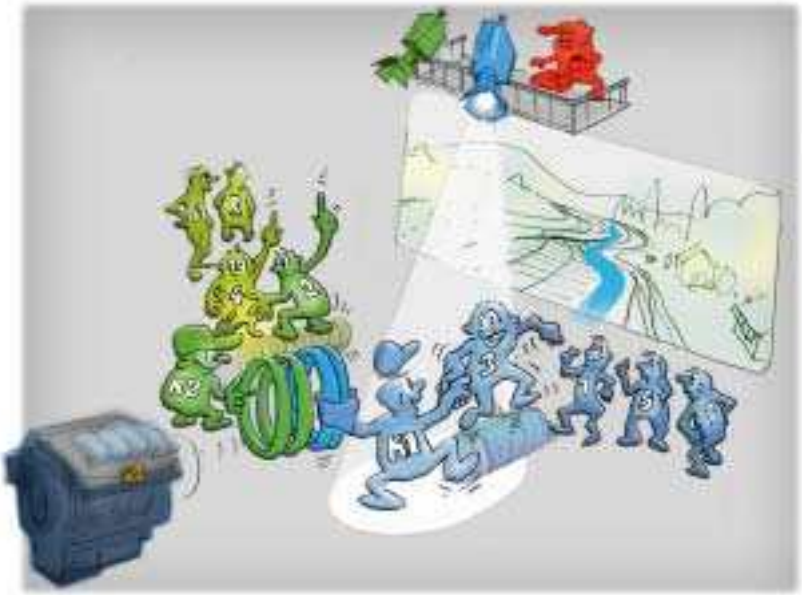

S390_002

Make use of the available range of training courses for training...

S390_090

NEW

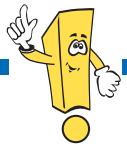

Attention
Note

The self-study programme shows the design and function of new developments.
The contents will not be updated.

For current testing, adjustment and repair instructions, refer to the relevant service literature.

Contents

Introduction 4

Selector lever 6

Design of the gearbox 12

Mechatronic module 32

Electrohydraulic control unit. 34

Oil circuit – hydraulic system 35

Gearbox management system 50

Diagnosis 67

Service 68

Test yourself 70

Introduction

With the new double-clutch gearbox 0AM, Volkswagen is presenting two world premieres:

- The first 7-speed gearbox for mounting transversely at the front and
- The first double-clutch gearbox with dry double clutch

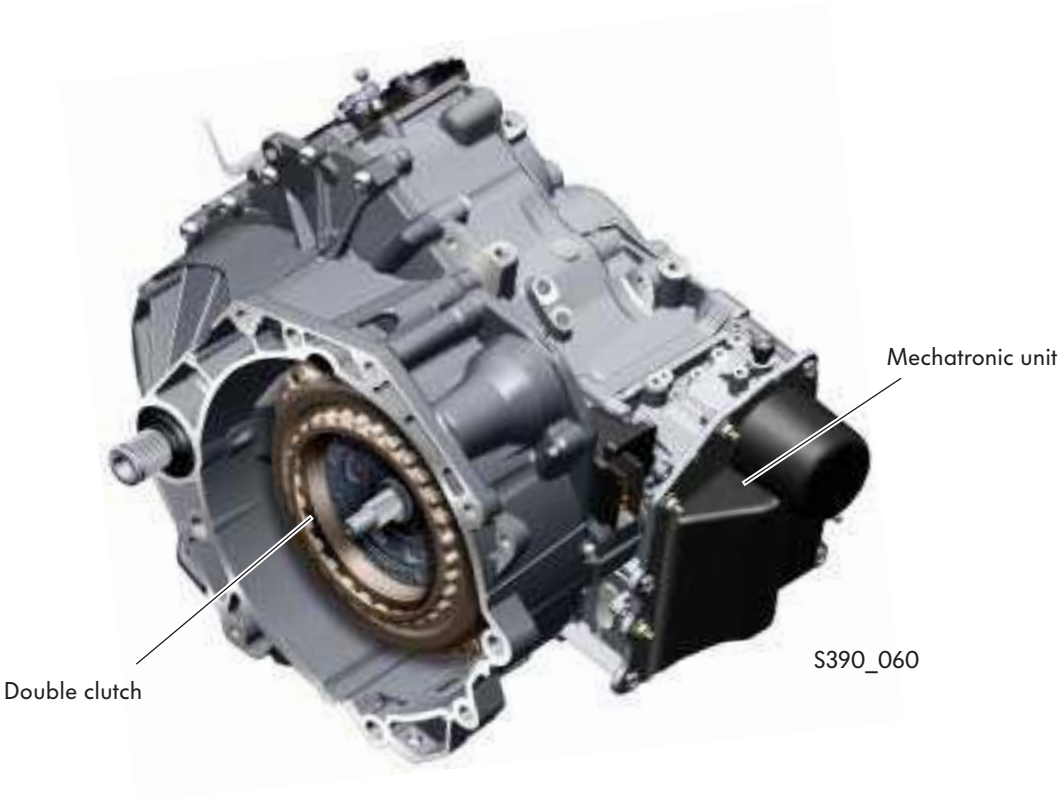

As a design feature, the dry double clutch has an extensive impact on the entire gearbox concept. In comparison with the direct-shift gearbox 02E, efficiency has once again been considerably improved thanks to the new gearbox concept.

This improved efficiency makes a significant contribution towards lowering consumption and emissions.

The 7-speed double-clutch gearbox 0AM is a further milestone in the Volkswagen Group's gearbox strategy, and therefore extends Volkswagen's technological advantage still further.

Design features

- Modular design of the gearbox:
  The clutch, mechatronic unit and gearbox each form one unit
- Dry double clutch
- Separate oil circuit, mechatronic unit and mechanical gearbox, with lifetime fillings
- 7 gears on 4 shafts
- Oil pump driven subject to requirements
- No oil/water heat exchanger

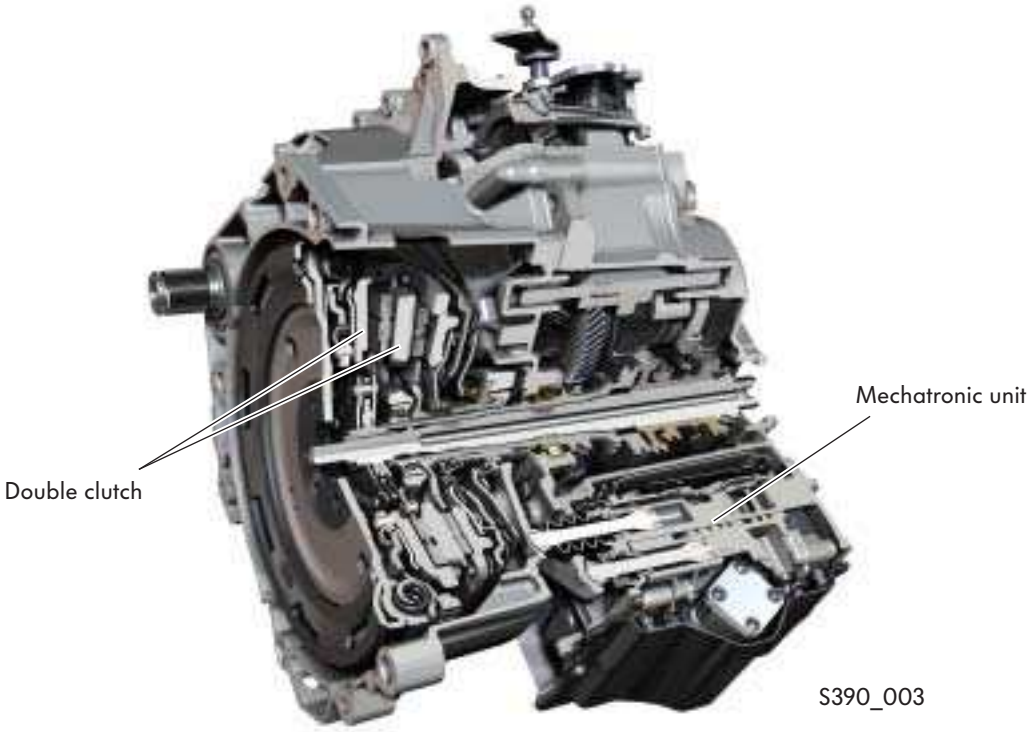

Technical data

Designation	0AM
Weight	Approx. 70 kg including clutch
Torque	250 Nm
Gears	7 forwards gears, 1 reverse gear
Spread	8.1
Operating mode	Automatic and Tiptronic modes
Gearbox oil volume	1.7l - G 052 171
Mechatronic unit oil volume	1.0l central hydraulic/power steering box oil G 004 000

Selector lever

Actuation

The selector lever is actuated as in vehicles with automatic gearboxes. The double-clutch gearbox also offers the option of shifting using Tiptronic.

Precisely as in vehicles with automatic gearboxes, the selector lever is equipped with a selector lever lock and an ignition key withdrawal lock. The lock functions as before. The design is new.

The selector lever positions are:

P - **P**ark
To move the selector lever from this position, the ignition must be "on" and the foot brake must be depressed.
The release button on the selector lever must also be pressed.

R - **R**everse gear
The release button must be pressed to engage this gear.

N - **N**eutral position
In this position, the gearbox is in neutral.
If the selector lever is set to this position for a long time, the foot brake must be depressed again to move it from this position.

D - **D**rive position
(Normal programme)
In this drive position, the forwards gears are shifted automatically.

S - **S**port
Automatic gear selection is carried out according to a "sporty" characteristic curve, which is stored in the control unit.

+ and **–**
The Tiptronic functions can be carried out in the right-hand selector lever gate and at the steering wheel switches.

S390_005

S390_006

Design of the selector lever

Selector lever E313

Hall senders in the selector lever mounting register the position of the selector lever and make it available to the mechatronic unit via the CAN bus.

Selector lever lock solenoid N110

The solenoid locks the selector lever in the "P" and "N" positions. The solenoid is controlled by the selector lever sensors control unit J587.

Selector lever locked in position P switch F319

If the selector lever is in the "P" position, the switch transmits the signal – selector lever in "P" position – to the steering column electronics control unit J527. The control unit requires this signal to control the ignition key withdrawal lock.

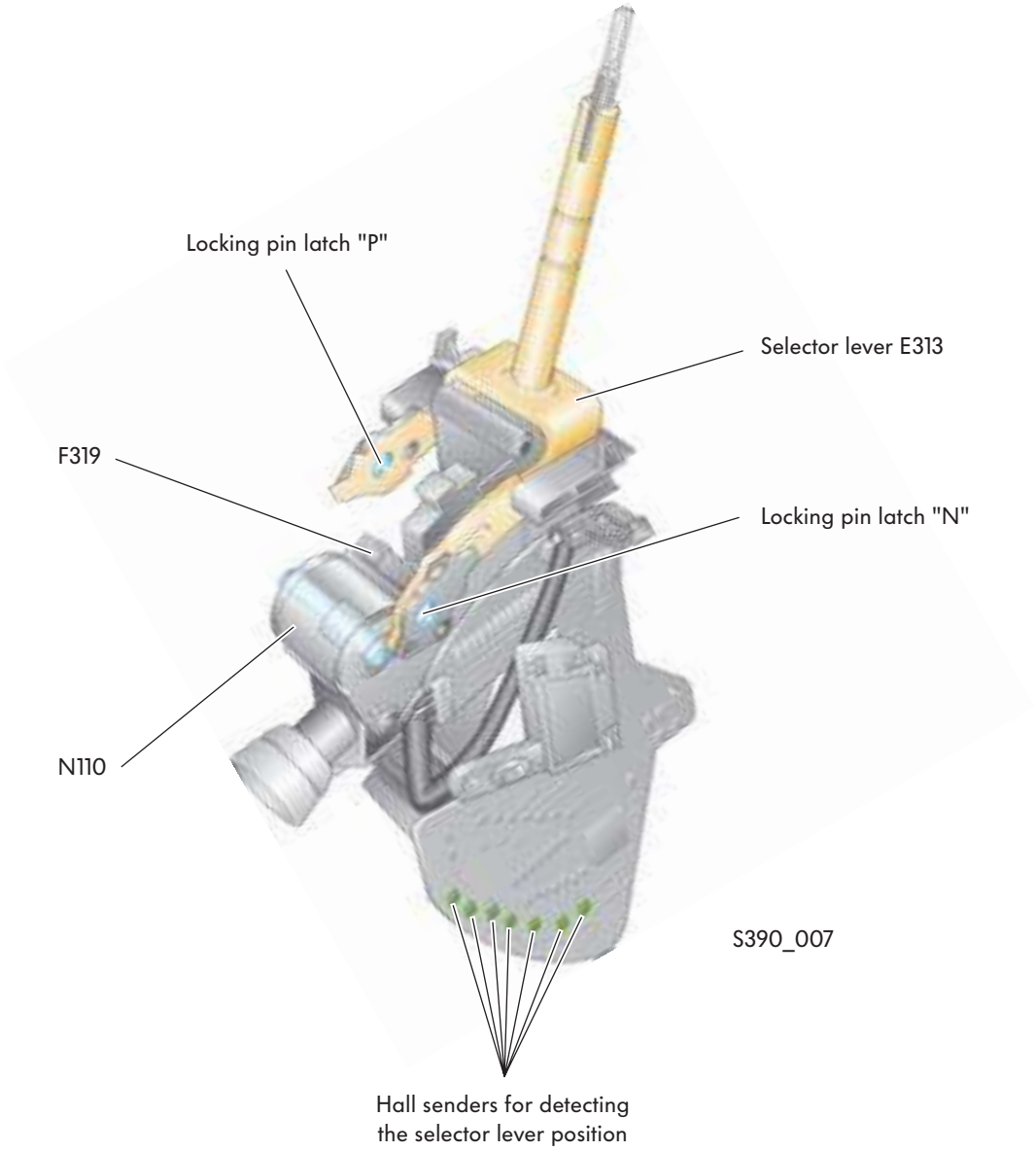

Selector lever

Selector lever lock solenoid N110

How it works:

Selector lever locked in "P" position

If the selector lever is set to "P", the locking pin is located in locking pin latch "P". This prevents the locking lever from being moved unintentionally.

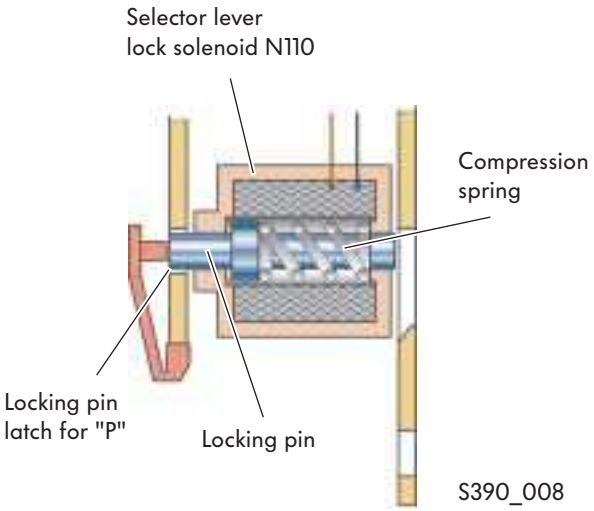

S390_008

Selector lever released:

After switching on the ignition and actuating the foot brake, the selector lever sensors control unit J587 supply the selector lever lock solenoid N110 with current. As a result of this, the locking pin is withdrawn from the locking pin latch "P".

The selector lever can now be moved to the drive position.

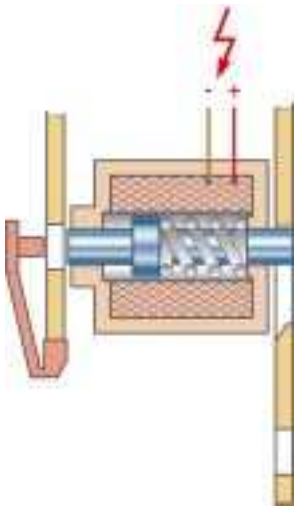

S390_009

Selector lever locked in "N" position

If the selector lever is set to the "N" position for longer than 2 sec., the control unit supplies the solenoid with current. As a result of this, the locking pin is pressed into locking pin latch "N". The selector lever can no longer be unintentionally moved into a gear. The locking pin is released when the brake is actuated.

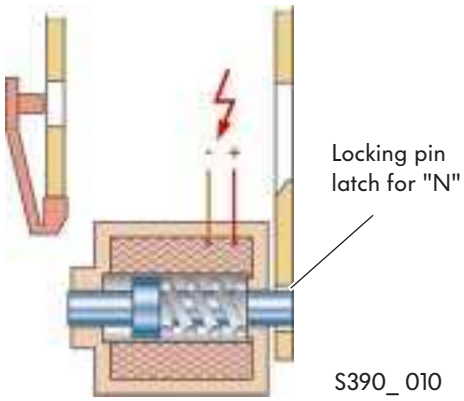

S390_ 010

Emergency release

If the voltage supply to the selector lever lock solenoid N110 fails, the selector lever can no longer be moved, because selector lever lock "P" remains activated in the event of a power failure.

By mechanically "pressing in" the locking pin with a narrow object, the lock can be released and the selector lever can be "emergency released" to the "N" position.

The vehicle can be moved again.

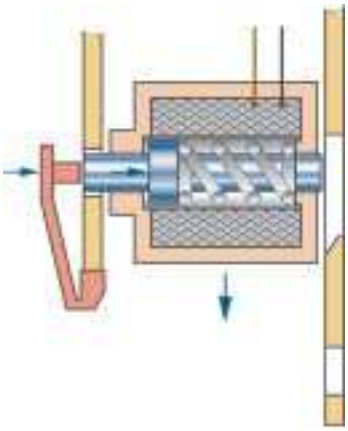

S390_011

Selector lever

Ignition key withdrawal lock

The ignition key withdrawal lock prevents the ignition key from being turned back to the removal position if the parking lock is not engaged.

It functions electromechanically and is controlled by the steering column electronics control unit J527.

The steering column electronics control unit J527 detects the open switch. The ignition key withdrawal lock solenoid N376 is not supplied with current.
The compression spring in the solenoid pushes the locking pin into the release position.

S390_012

How it works:

Selector lever in "park position", the ignition is switched off. If the selector lever is set to the park position, the selector lever locked in position "P" switch F319 is opened.

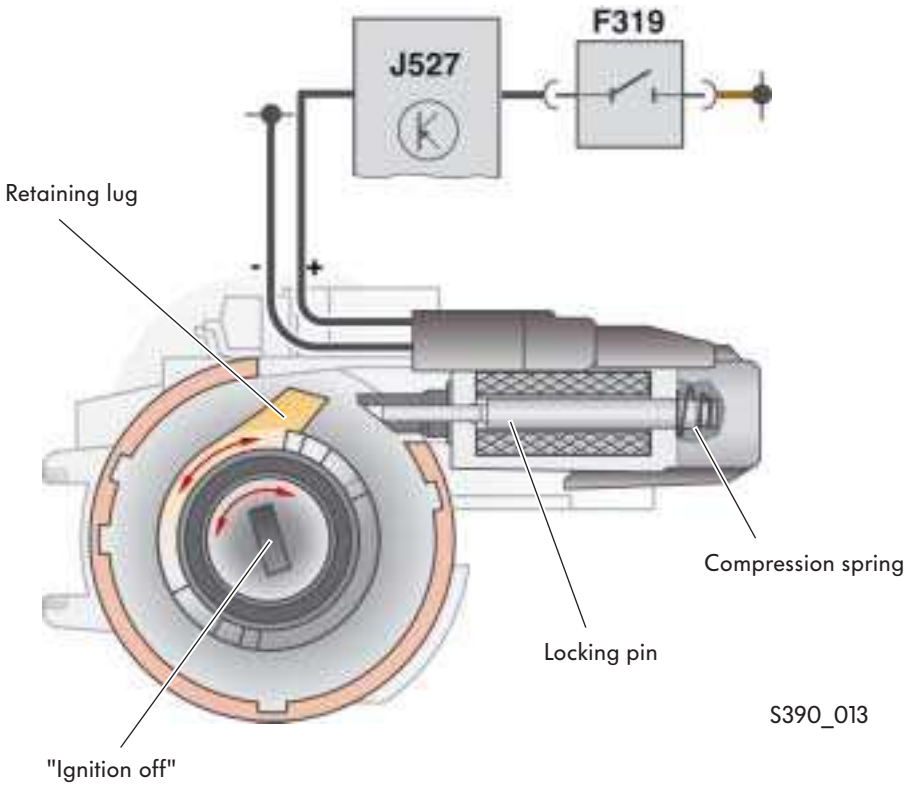

S390_013

How it works:

Selector lever in "drive position", the ignition is switched on.

If the selector lever is set to the drive position, the selector lever locked in position "P" switch F319 is closed.

The steering column electronics control unit then supplies the ignition key withdrawal lock solenoid N376 with current.
The locking pin is pushed, overcoming the force of the compression spring, into the locked position by the solenoid.

In the locked position, the locking pin prevents the ignition key from being turned back and withdrawn.

Only when the selector lever is pushed into the park position does the selector lever locked in position "P" switch open, and the control unit swtches off the current supply to the solenoid.

The locking pin is then pressed back by the compression spring. The ignition key can be turned further and can be removed.

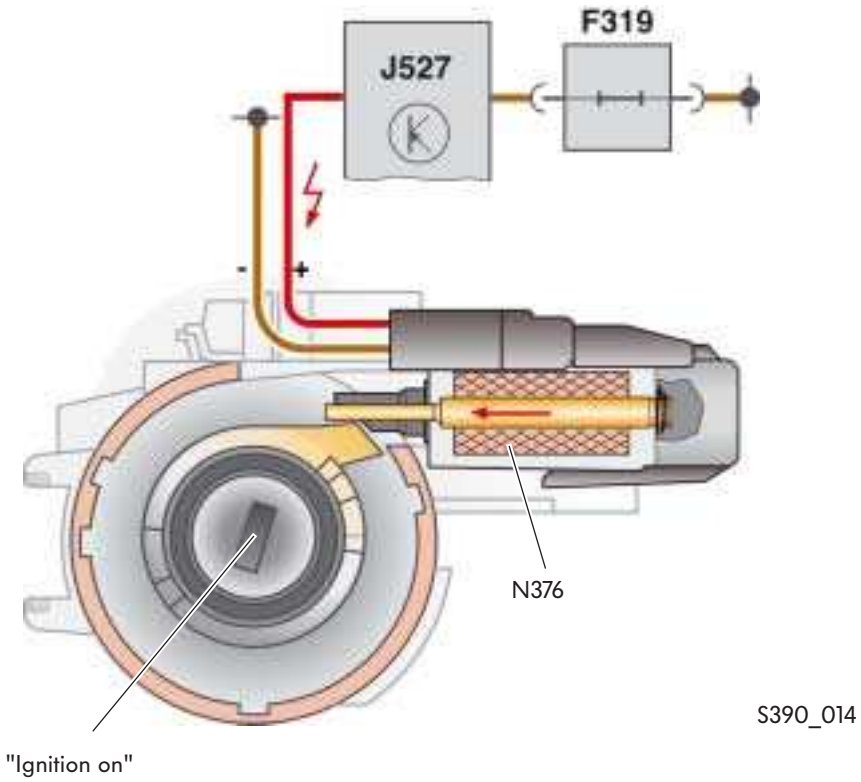

Design of the gearbox

Basic principle

In principle, the double-clutch gearbox consists of two independent, gear train halves.

In terms of function, each gear train half is designed as a manual gearbox. A clutch is assigned to each gear train half.

The two clutches are dry clutches.
They are opened and closed and controlled by the mechatronic unit depending on the gear which is to be shifted.

Gears 1, 3, 5 and 7 are shifted via clutch K1 and therefore via gear train half 1 and output shaft 1.

Gears 2, 4, 6 and reverse gear are conducted via clutch K2 and therefore gear train half 2 and output shafts 2 and 3.

One gear train half is always positively connected.
The next gear can already be shifted in the other gear train half, because the clutch for this gear is still open.

A conventional, manual gearbox synchroniser and shift unit is assigned to each gear.

Principle diagram

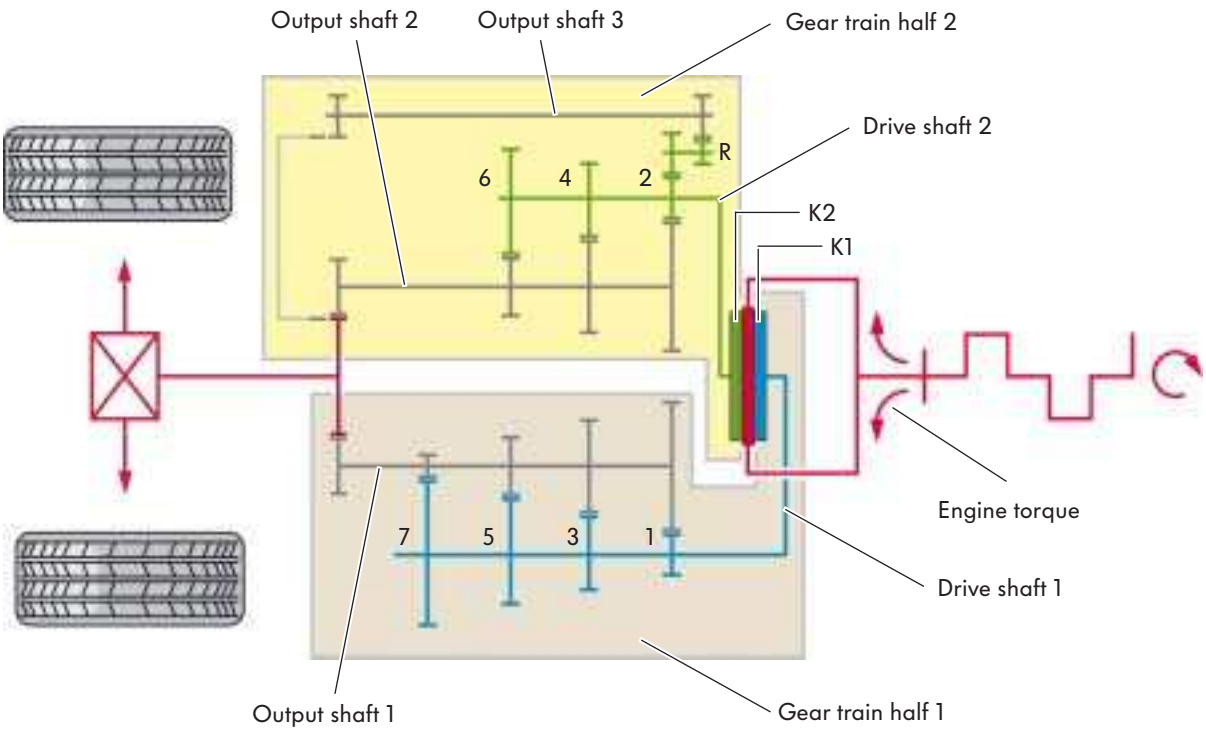

S390_015

Torque input

The torque is transferred from the dual-mass flywheel, which is secured to the crankshaft, to the double clutch. To achieve this, the dual-mass flywheel is equipped with inner teeth. These engage in the outer teeth on the double clutch carrier ring. From there, the torque is transmitted onwards into the double clutch.

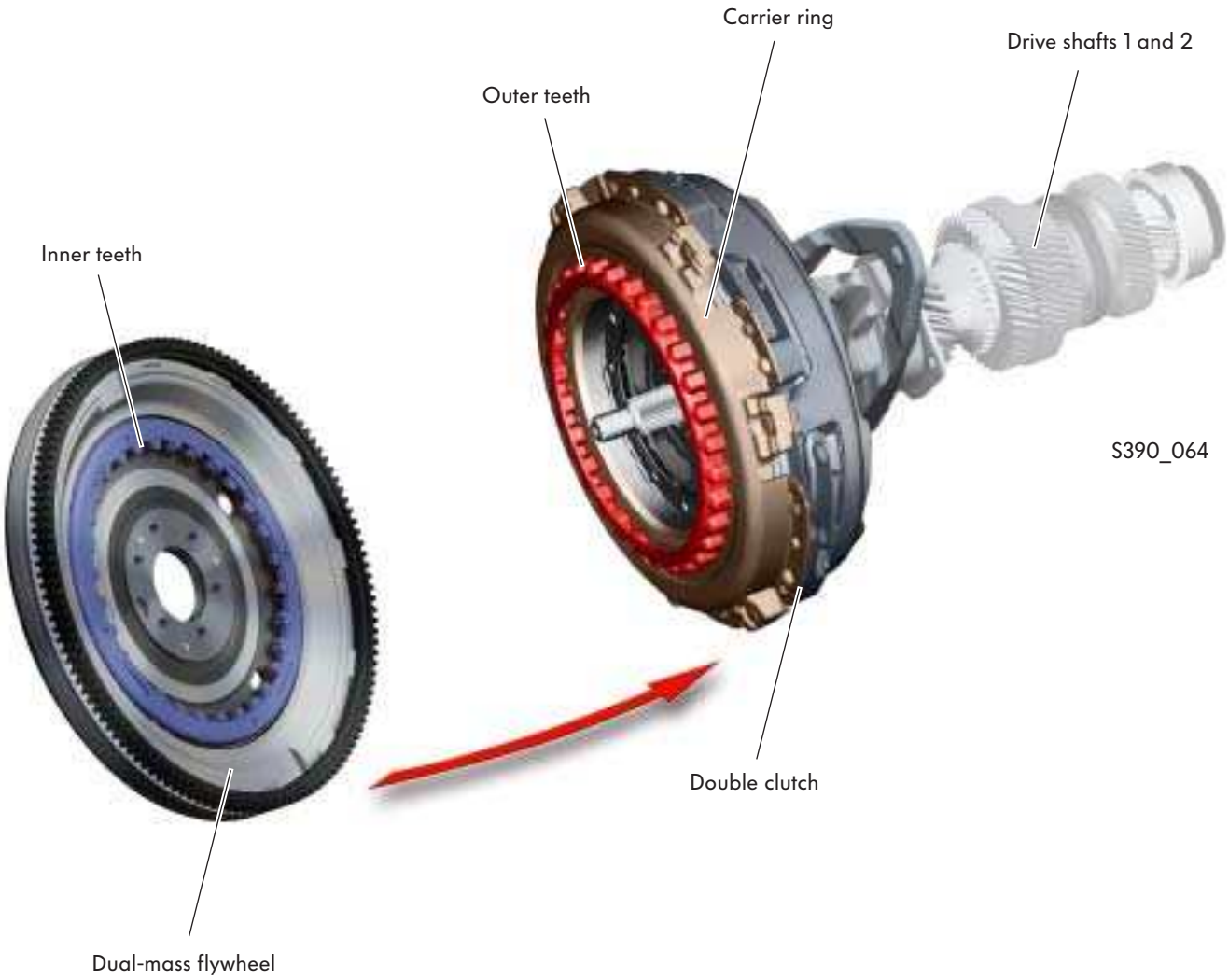

Design of the gearbox

Double clutch and torque curve

The double clutch is located in the bell housing.
It consists of two conventional clutches, which are comprised to form a double clutch. During the remainder of this self-study programme, the clutches are referred to as K1 and K2.

Clutch K1 transfers the torque to drive shaft 1 via splines. From drive shaft 1, the torque for gears 1 and 3 is transferred to output shaft 1 and that for gears 5 and 7 to output shaft 2.

Clutch K2 transfers the torque to drive shaft 2 via splines.
It transfers the torque for gears 2 and 4 to output shaft 1 and the torque for 6th gear and reverse gear to output shaft 2. Via reverse gear intermediate gear R1, the torque is then passed on to reverse gear R2 on output shaft 3.

All three output shafts are connected to the differential final drive gear.

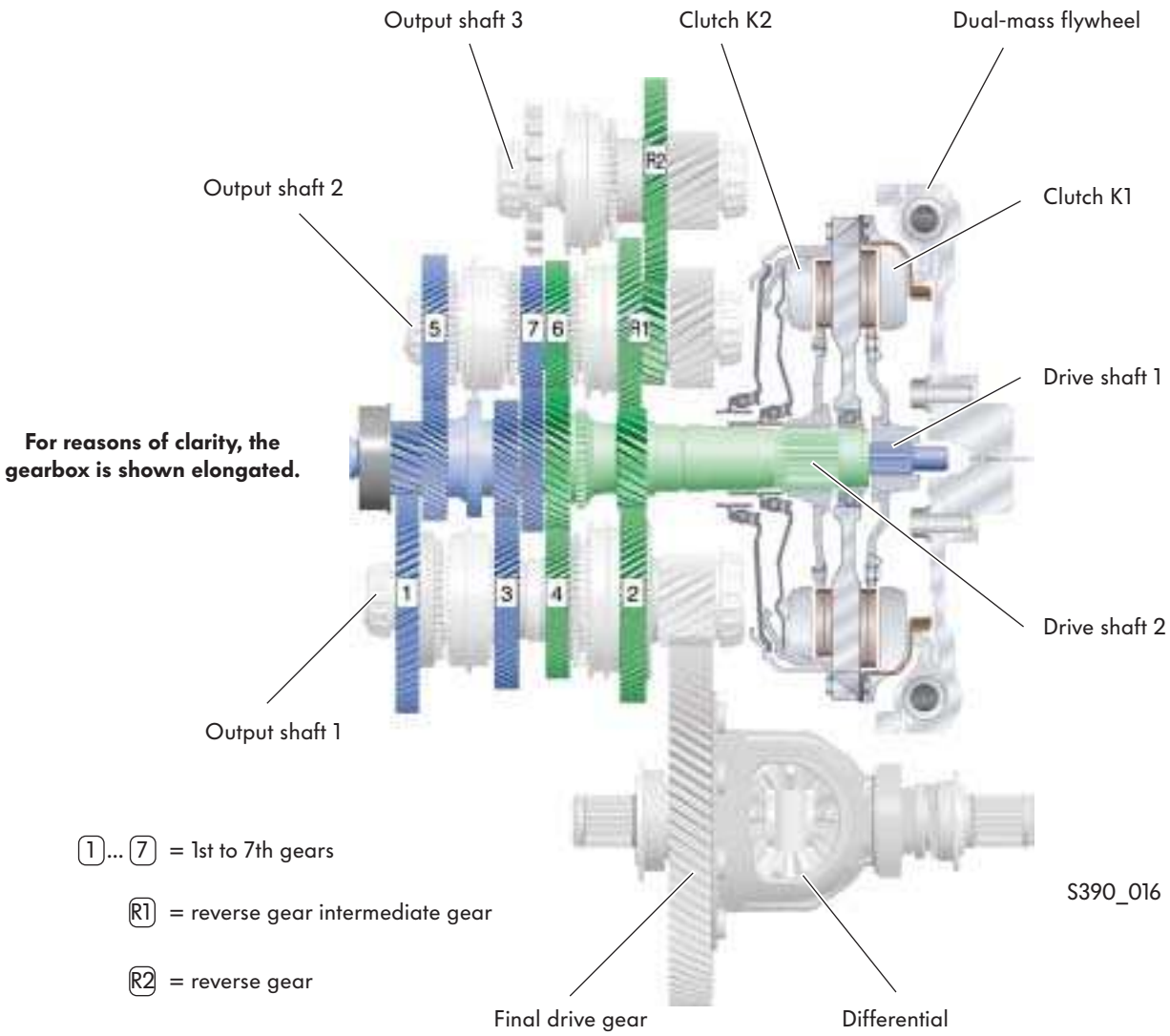

For reasons of clarity, the gearbox is shown elongated.

Double clutch drive plate

From the carrier ring, the torque is transferred to the drive plate in the double clutch.
To achieve this, the carrier ring and drive plate are joined firmly together. The drive plate is mounted on drive shaft 2 as an idler gear.

How it works:

If one of the two clutches is actuated, the torque is transferred from the drive plate onto the relevant clutch plate and onwards onto the corresponding drive shaft.

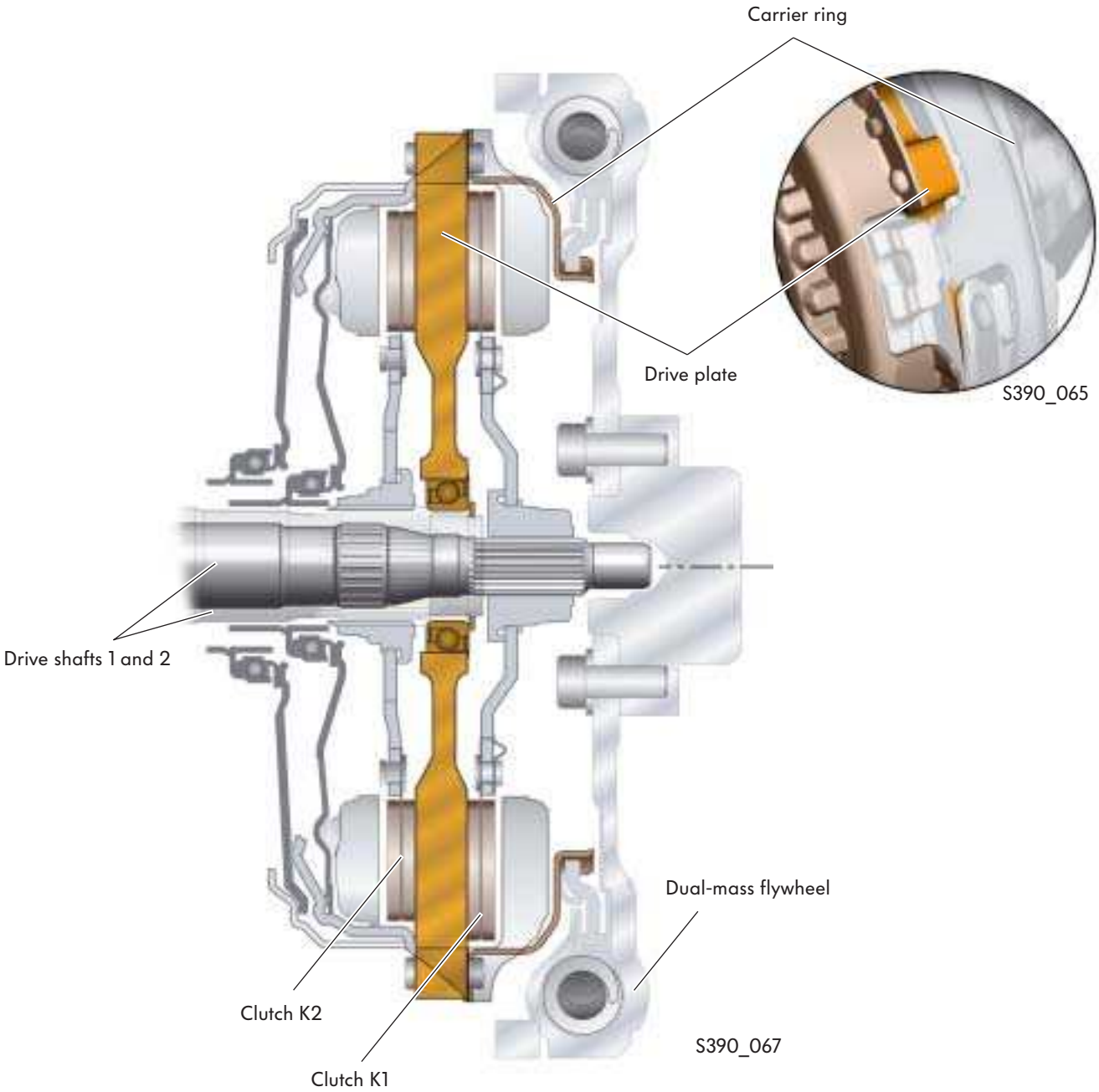

The clutches

Two independent, dry clutches operate in the double clutch. They each conduct the torque into one gear train half. Two clutch positions are possible:

- When the engine is switched off and idling, both clutches are open.
- During vehicle operation, only one of the two clutches is ever closed.

Clutch K1

Clutch K1 conducts the torque for gears 1, 3, 5 and 7 to drive shaft 1.

Clutch K1 not actuated

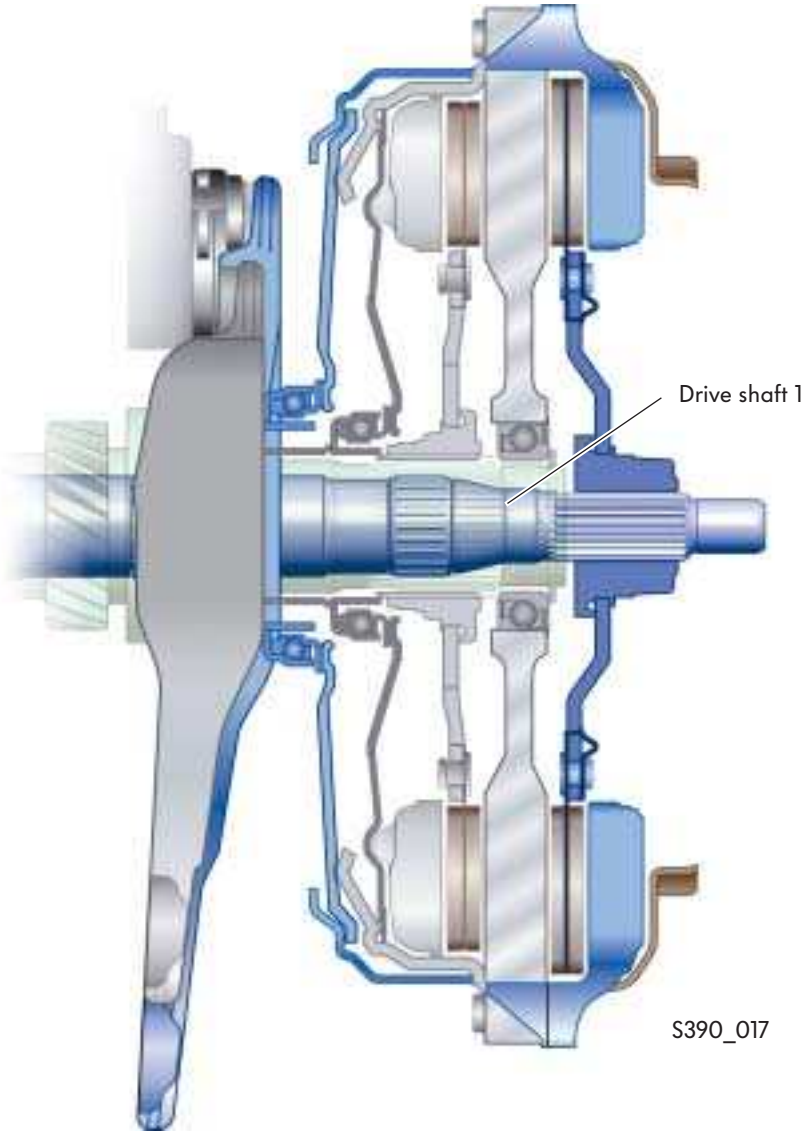

How it works:

Clutch K1

To actuate the clutch, the engaging lever presses the engagement bearing onto the diaphragm spring.
At several relay points, this compression movement is transformed into a tension movement.

As a result of this, the pressure plate is pulled onto the clutch plate and the drive plate.
The torque is therefore transferred onto the drive shaft.

The engaging lever is actuated via valve 3 in gear train half 1 N435 by the hydraulic clutch actuator for K1.

Clutch K1 actuated

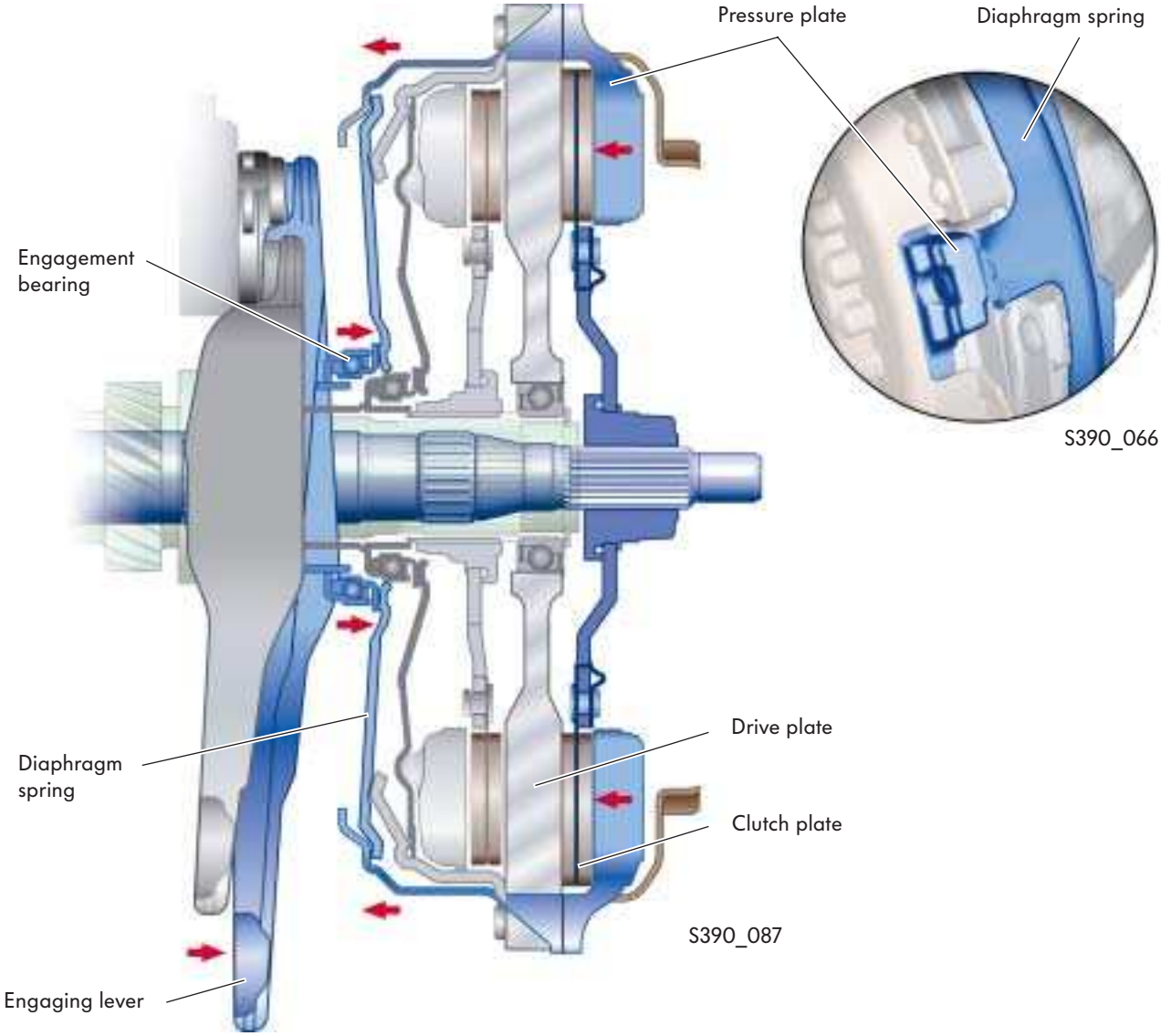

Clutch K2

Clutch K2 conducts the torque for gears 2, 4, 6 and R to drive shaft 2.

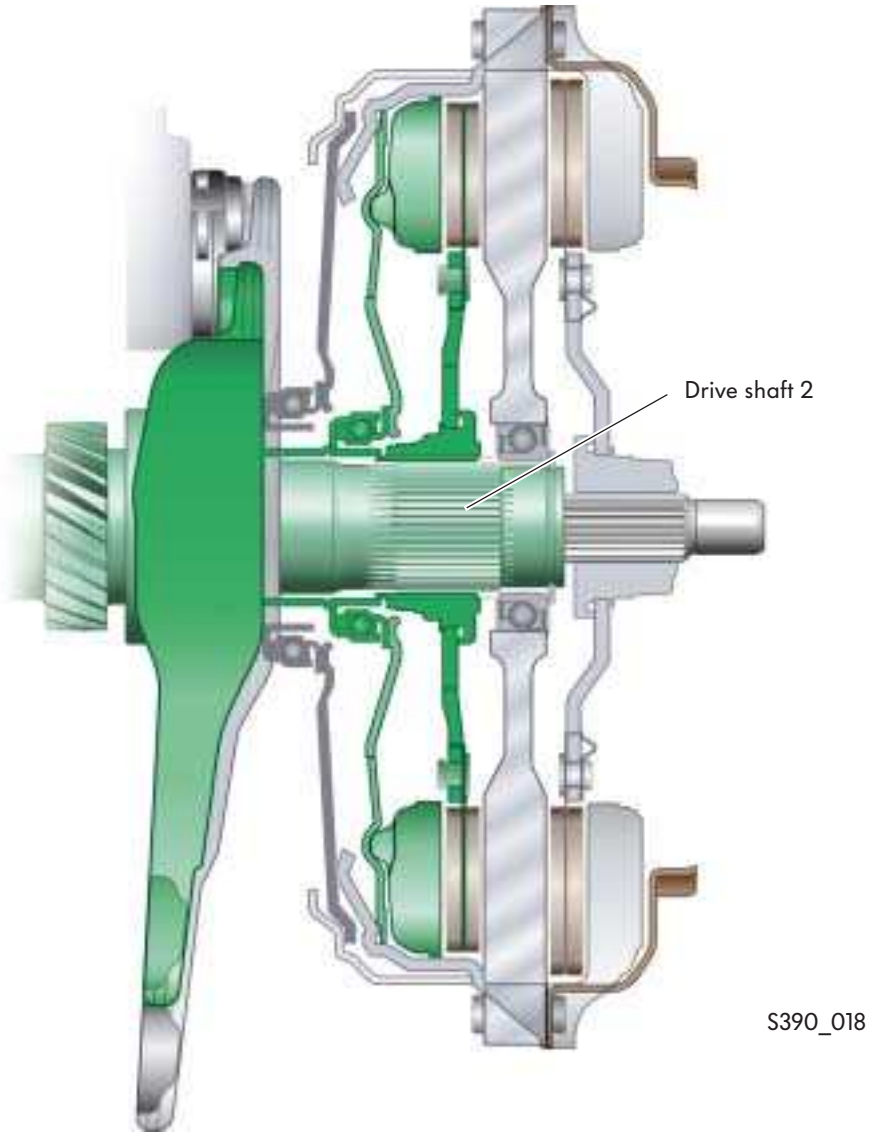

How it works:

Clutch K2

If the engaging lever is actuated, the engagement bearing presses against the pressure plate's diaphragm spring. As the diaphragm spring is supported by the clutch housing, the pressure plate is pressed against the drive plate and the torque is transferred onto drive shaft 2.
The engaging lever is actuated via valve 3 in gear train half 2 N439 by the hydraulic clutch actuator for K2.

Clutch K2 actuated

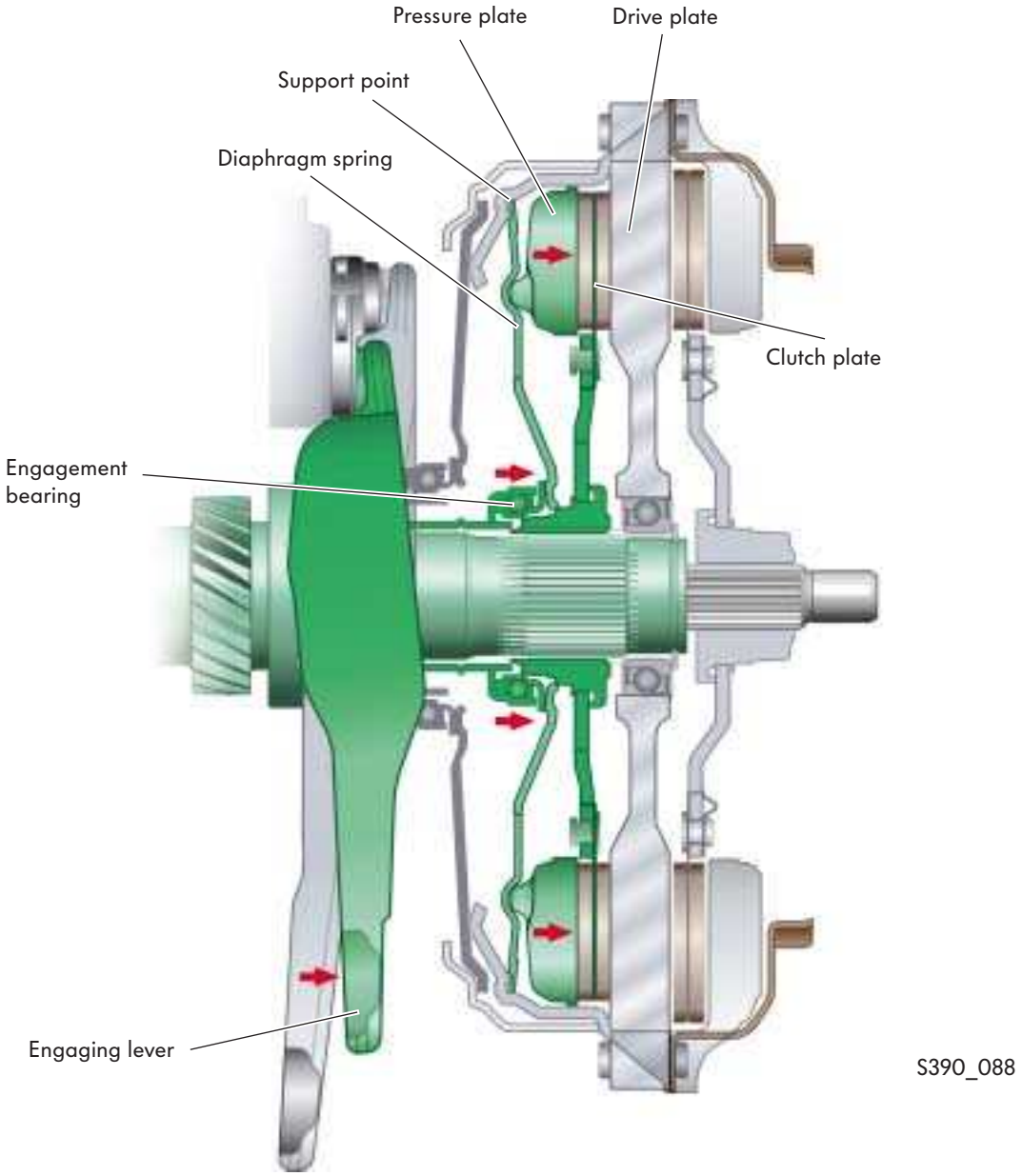

Design of the gearbox

Drive shafts

The drive shafts are located in the gearbox housing.
Each drive shaft is connected to a clutch via splines.
These transfer the engine torque onto the output shafts according to the gear which is engaged.
Drive shaft 2 is hollow.
Drive shaft 1 runs through hollow drive shaft 2.
A ball bearing, which is used to mount the drive shafts in the gearbox housing, is located on each shaft.

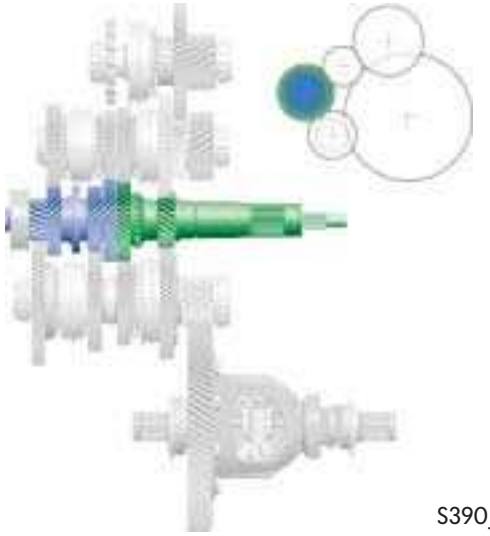

S390_046

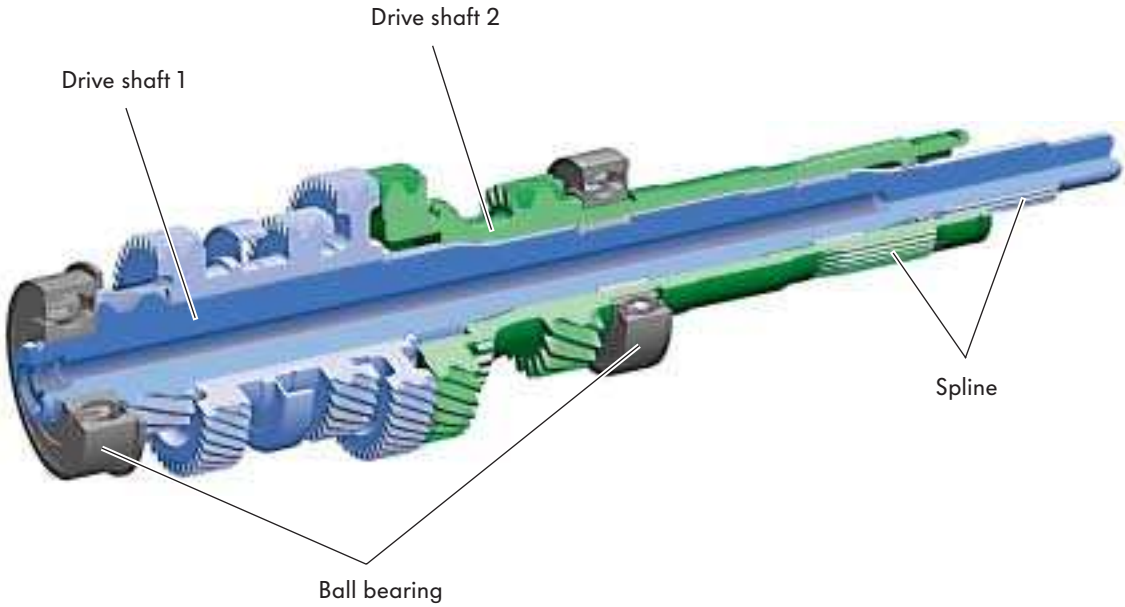

S390_019

Drive shaft 2

Due to its installation position, drive shaft 2 will be described before drive shaft 1.

Drive shaft 2 is designed as a hollow shaft. It is connected to K2 via splines.
Drive shaft 2 is used to shift gears 2, 4, 6 and R. To record the gearbox input speed, this shaft has the gear for gearbox input speed sender 2 G612.

Drive shaft 1

Drive shaft 1 is connected to clutch K1 via splines. It is used to shift gears 1,3,5 and 7. To record the gearbox input speed, this shaft has the impulse wheel for gearbox input speed sender 1 G632.

Please note that a strong magnet may destroy the impulse wheel for drive shaft 1.
Further information on the impulse wheel can be found in self-study programme 308 "The Direct Shift Gearbox 02E".

Design of the gearbox

Output shafts

Three output shafts are contained in the gearbox housing.
Depending on the gear which is engaged, the engine's torque is transferred from the drive shafts to the output shafts.
An output gear, via which the torque is passed on to the differential final drive gear, is located on each output shaft.

Installation position in the gearbox
(View from the left – shown elongated)

S390_023

Output shaft 1

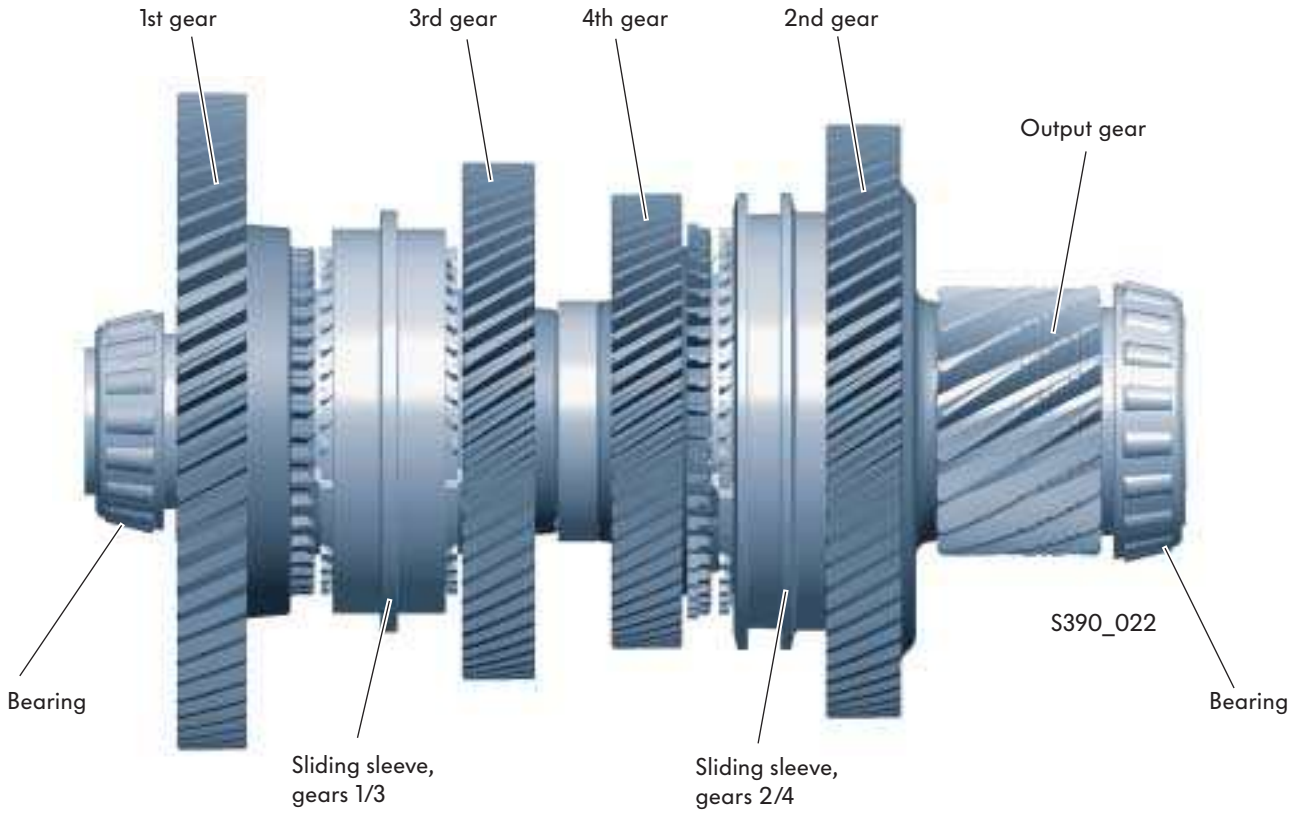

S390_022

The following are located on output shaft 1:

- The selector gears for gears 1, 2 and 3; the 3 gears are synchromeshed 3-fold.
- The selector gear for 4th gear; the 4th gear is synchromeshed 2-fold.

Installation position in the gearbox
(View from the left – shown elongated)

S390_025

Output shaft 2

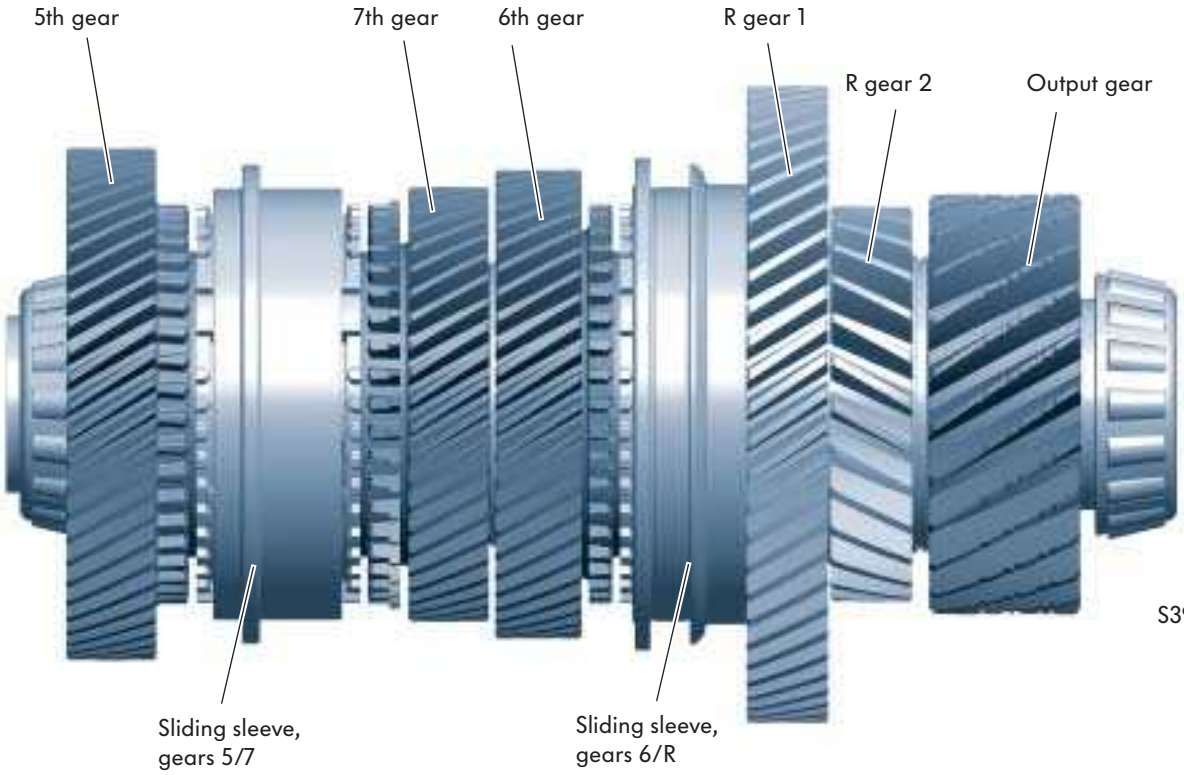

S390_024

The following are located on output shaft 2:

- The 2-fold synchromeshed selector gears for gears 5, 6 and 7, and
- The intermediate gears R gear 1 and R gear 2 for reverse gear.

Output shaft 3

Installation position in the gearbox
(View from the left – shown elongated)

S390_027

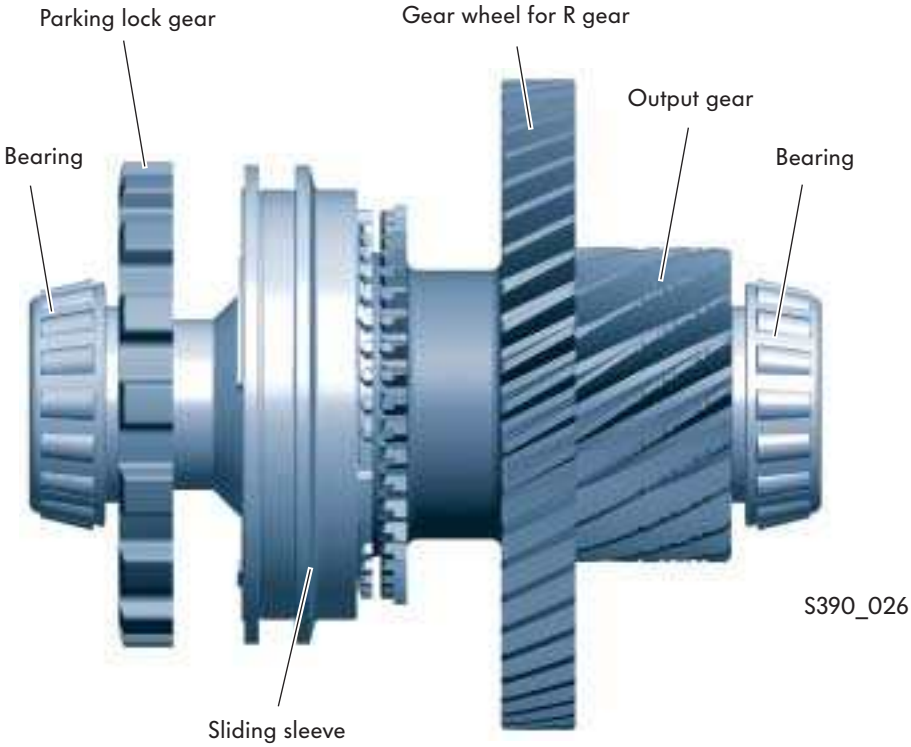

S390_026

The following are located on output shaft 3:

- The 1-fold synchromeshed selector gear for R gear
- The parking lock gear

Differential

Installation position in the gearbox
(View from the left – shown elongated)

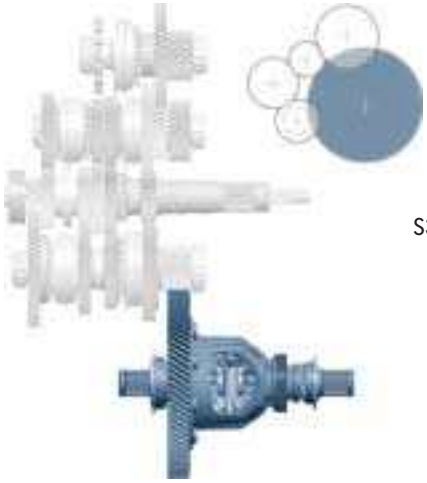

S390_029

Final drive gear

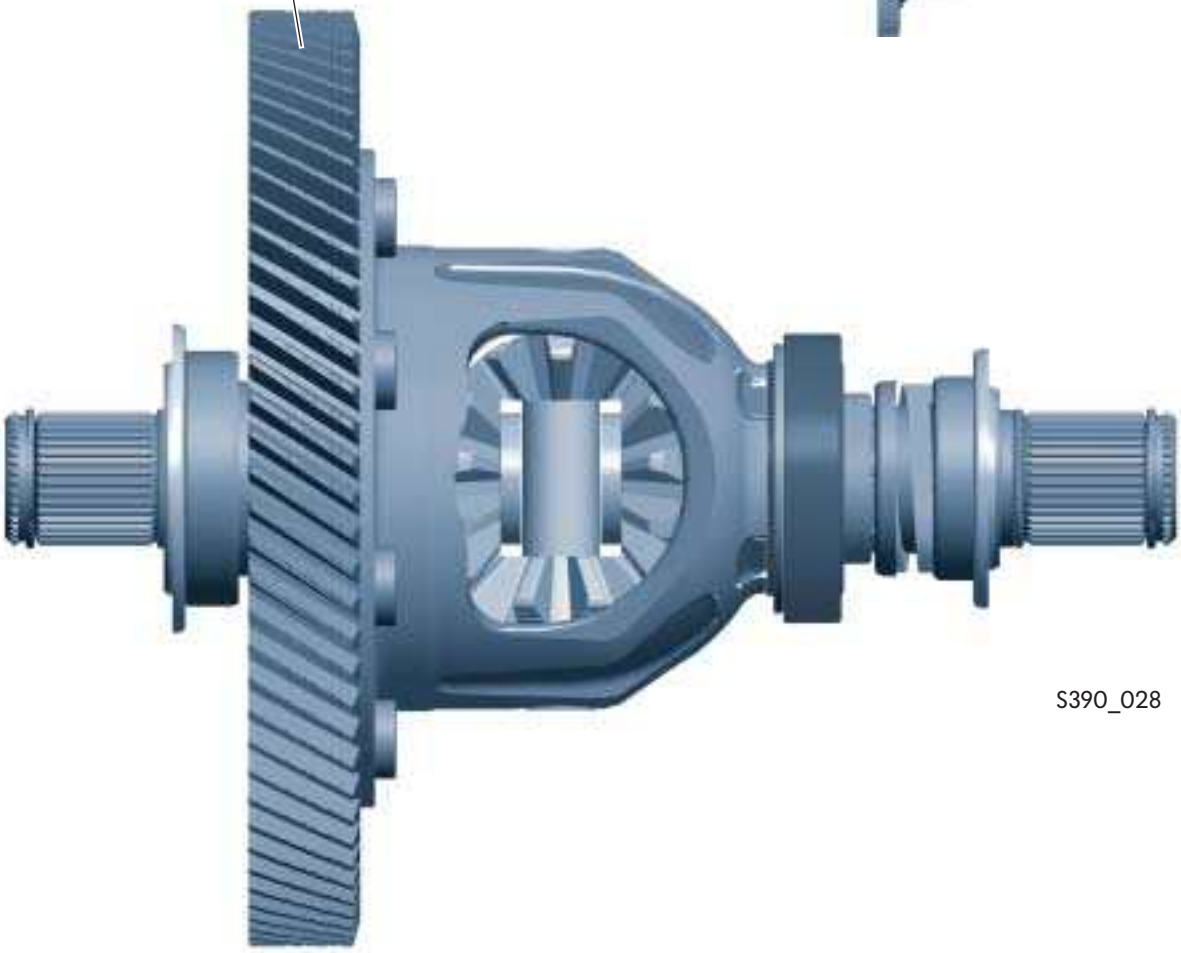

S390_028

The differential transfers the torque onwards to the vehicle's wheels via the drive shafts.

Parking lock

A parking lock is integrated into the double-clutch gearbox to ensure that it is parked securely and to prevent unintentional rolling away when the handbrake is not applied.

The locking pin is engaged purely mechanically via a Bowden cable between the selector lever and the parking lock lever on the gearbox.

The Bowden cable is used exclusively to actuate the parking lock.

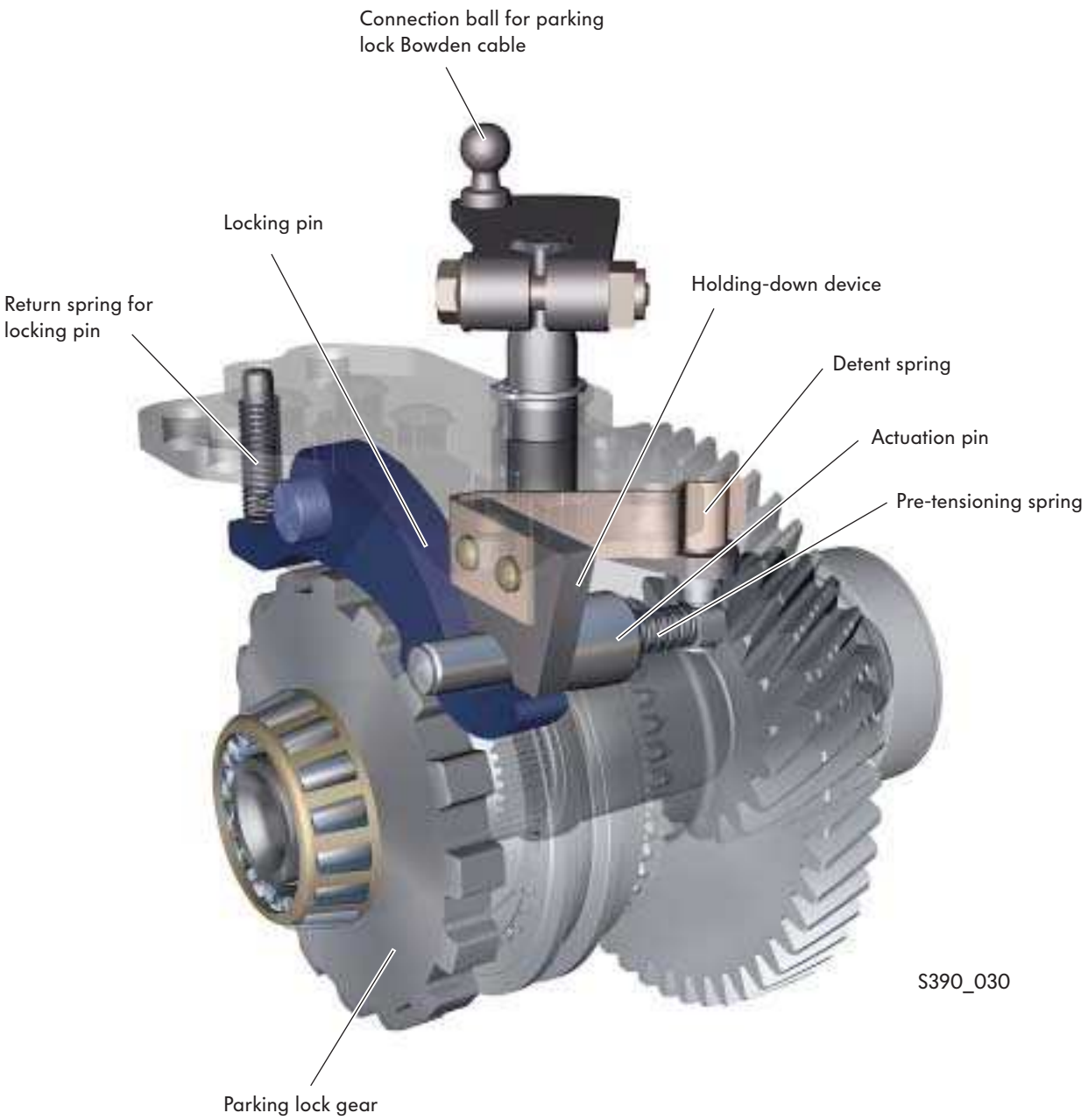

Function

Parking lock not actuated,
(selector lever position R, N, D, S)

When the parking lock is not actuated, the cone of the actuation pin lies on the holding-down device and the locking pin.
The parking lock is held in the non-actuated position by a locking device.

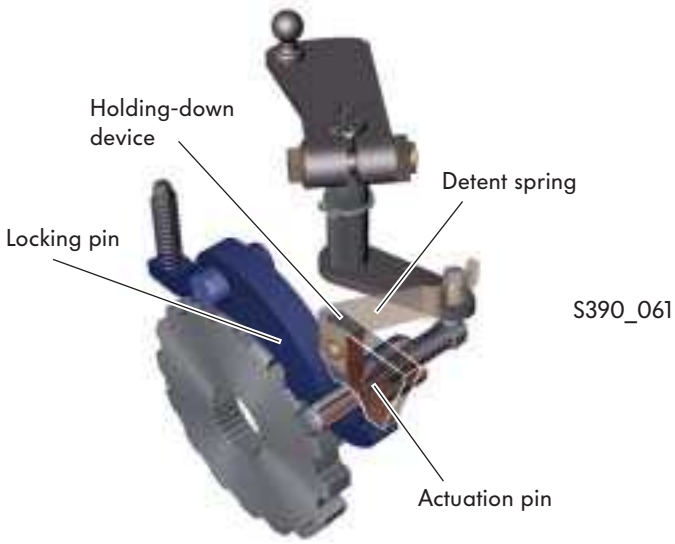

Parking lock actuated,
locking pin not engaged
(selector lever position P)

By actuating the parking lock, the cone of the actuation pin is pressed against the holding-down device and the locking pin. As the holding-down device is stationary, the locking pin moves down.
If it encounters a tooth on the parking lock gear, the pre-tensioning spring is tensioned.
The actuation pin is held in this position by the locking device.

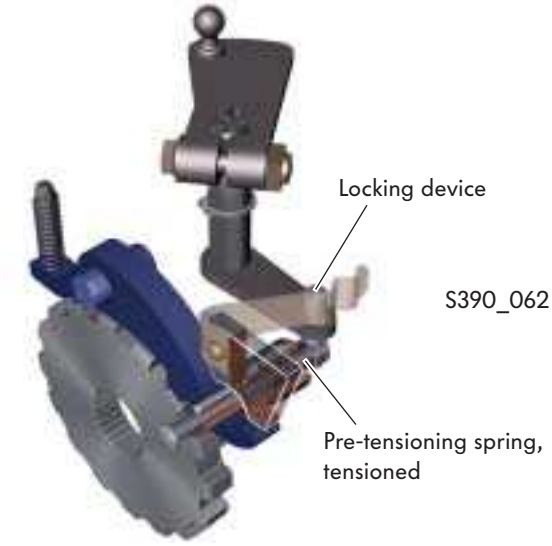

Parking lock actuated,
locking pin engaged
(selector lever position P)
(locking pin engaged)

If the vehicle continues to move, the parking lock gear also rotates.
As the actuation pin is pre-tensioned, it automatically pushes the locking pin into the next tooth space on the parking lock gear.

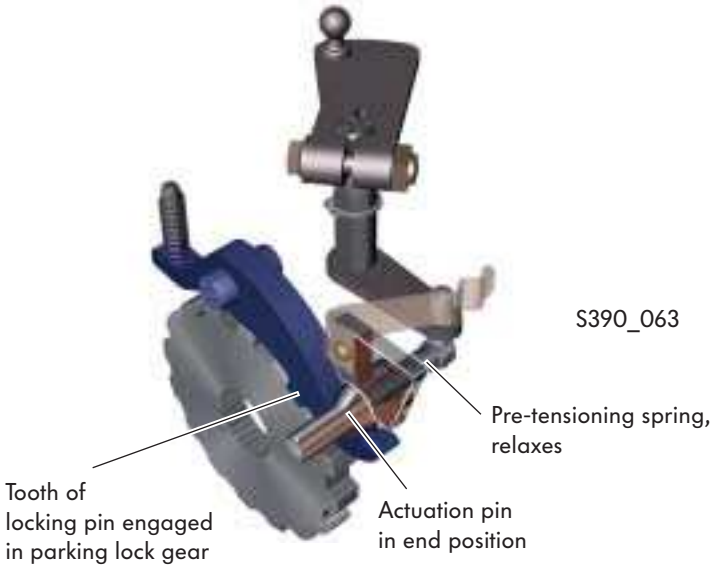

Gear synchronisation

A balked synchromesh with locking pieces is used in the case of all gears to synchronise the different speeds when changing gears. Depending on the shifting load, the gears are synchronised one- to three-fold.

Gear	Synchromesh	Synchroniser ring material
1st to 3rd	Three-fold	Brass with molybdenum coating
4th	Two-fold	Brass with molybdenum coating
5th to 7th	One-fold	Brass with molybdenum coating
R	One-fold	Brass with molybdenum coating

The figure shows the synchromesh design for 2nd, 4th and R gears.

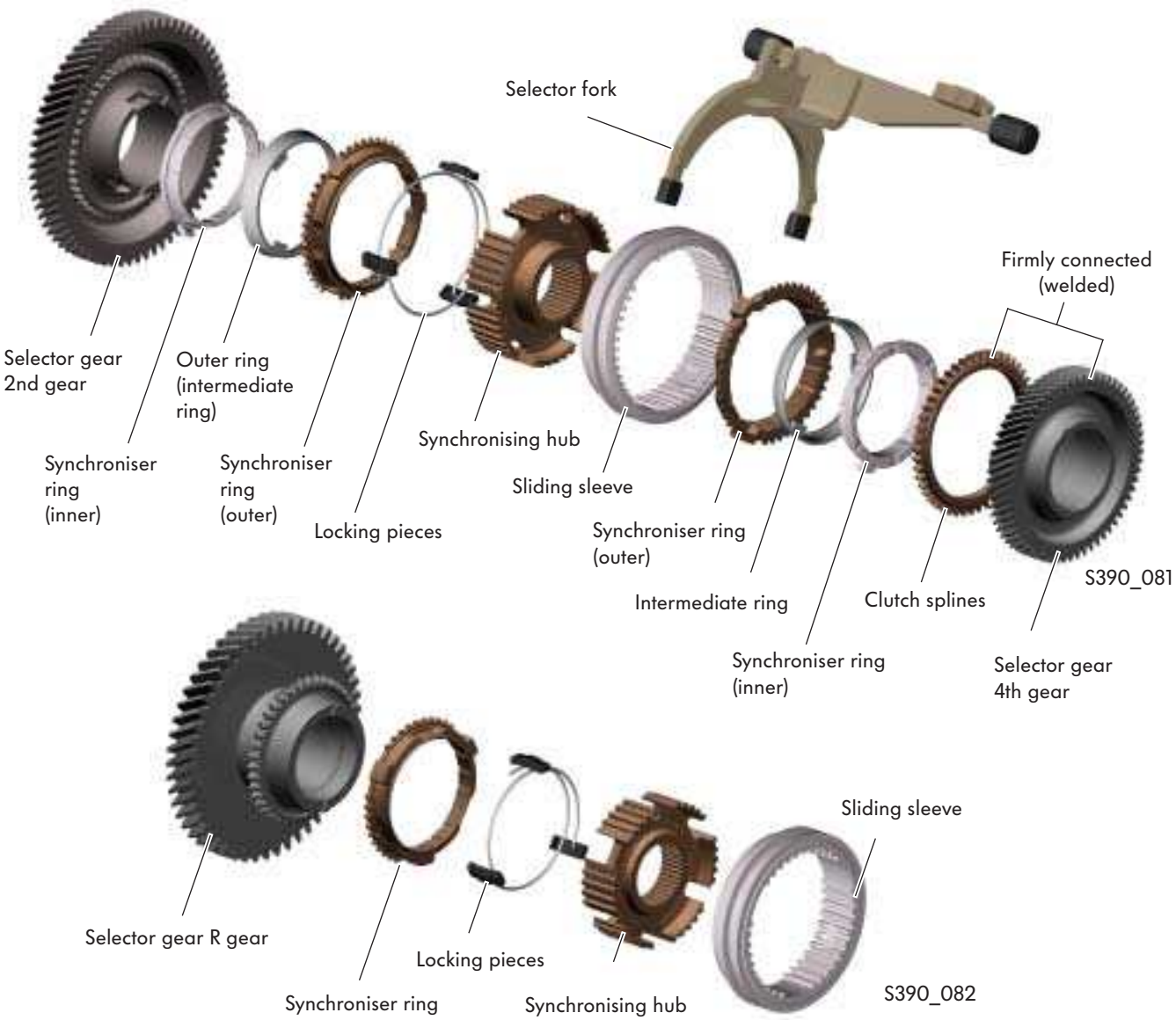

Power transmission in the gears

Torque is transmitted into the gearbox via either clutch K1 or K2.
Each clutch drives a drive shaft.
Drive shaft 1 is driven by clutch K1 and
drive shaft 2 is driven by clutch K2.

Power is transmitted to the differential via

- output shaft 1 for gears 1, 2, 3, and 4,
- output shaft 2 for gears 5, 6 and 7, and
- output shaft 3 for reverse gear and the parking lock.

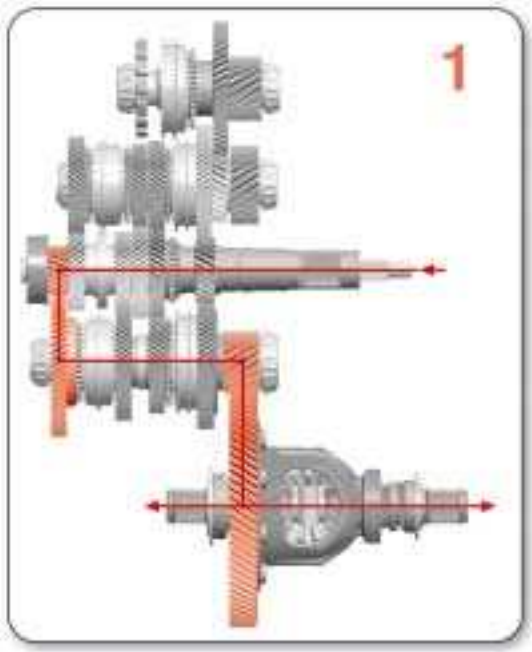

S390_033

1st gear
Clutch K1
Drive shaft 1
Output shaft 1
Differential

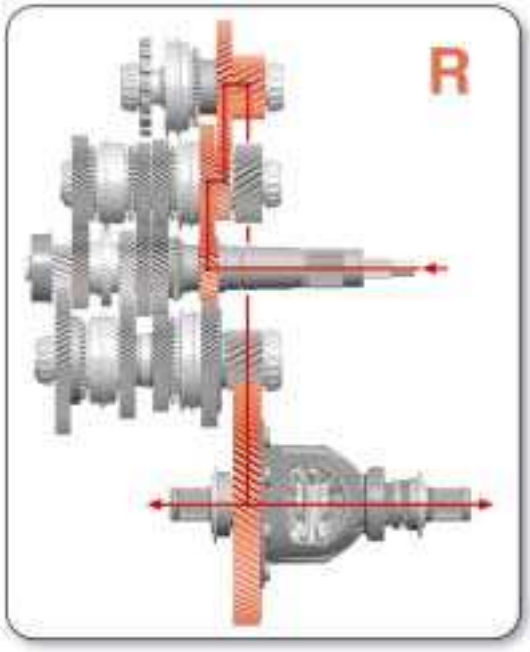

S390_034

R gear
Clutch K2
Drive shaft 2
Output shaft 3
Differential

The change in rotational direction for reverse gear is carried out by output shaft 3.

For greater clarity, power transmission is shown schematically in "elongated" form.

Design of the gearbox

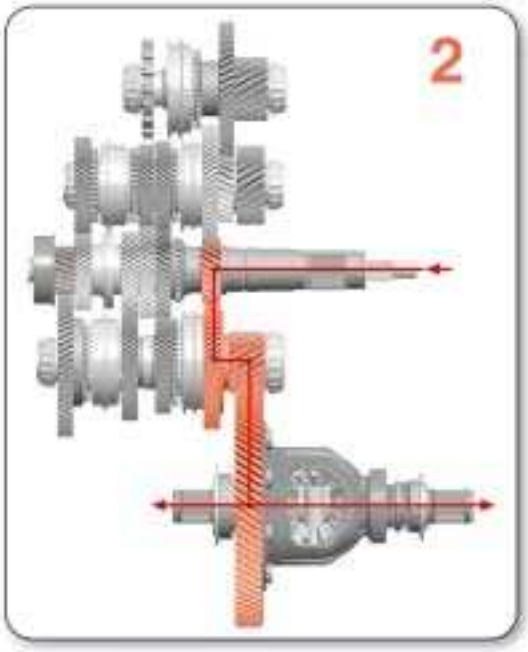

S390_035

2nd gear
Clutch K2
Drive shaft 2
Output shaft 1
Differential

3rd gear
Clutch K1
Drive shaft 1
Output shaft 1
Differential

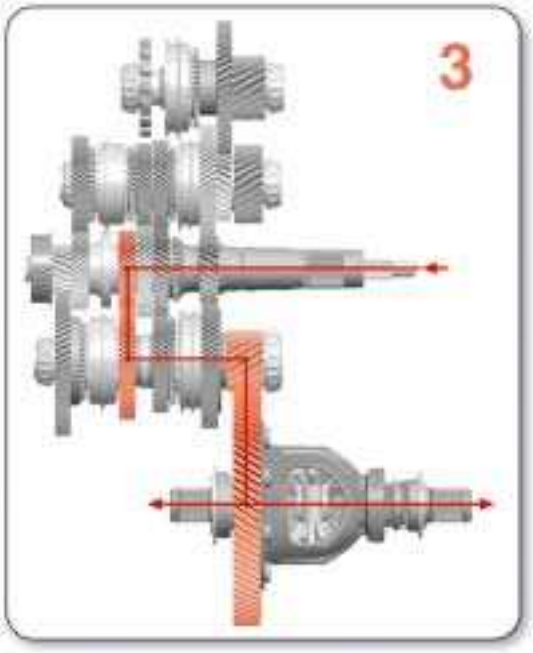

S390_036

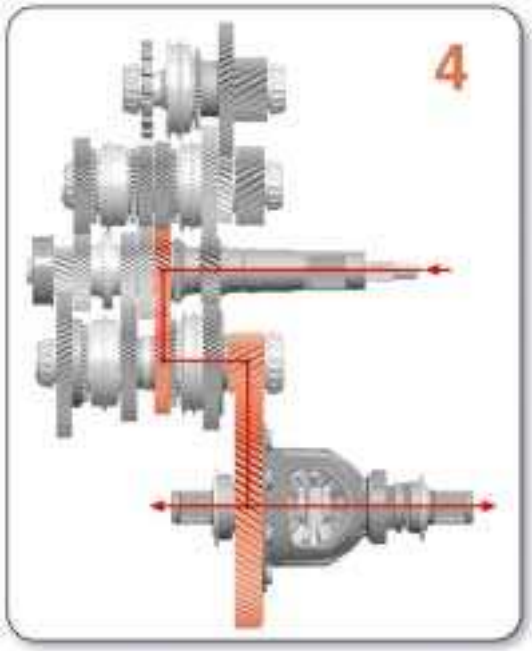

S390_037

4th gear
Clutch K2
Drive shaft 2
Output shaft 1
Differential

5th gear
Clutch K1
Drive shaft 1
Output shaft 2
Differential

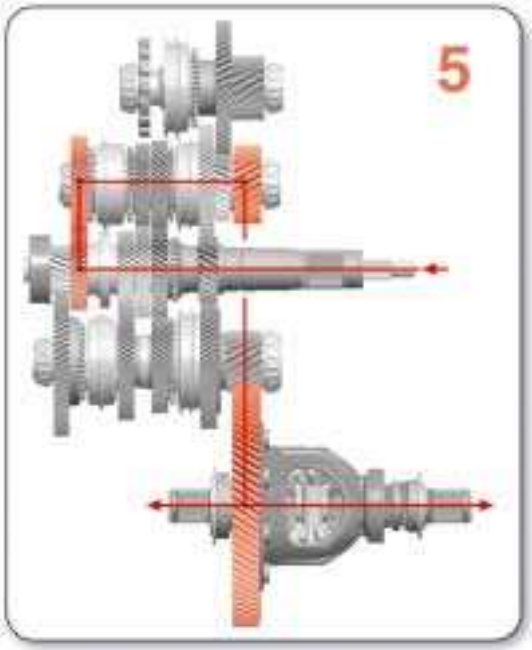

S390_038

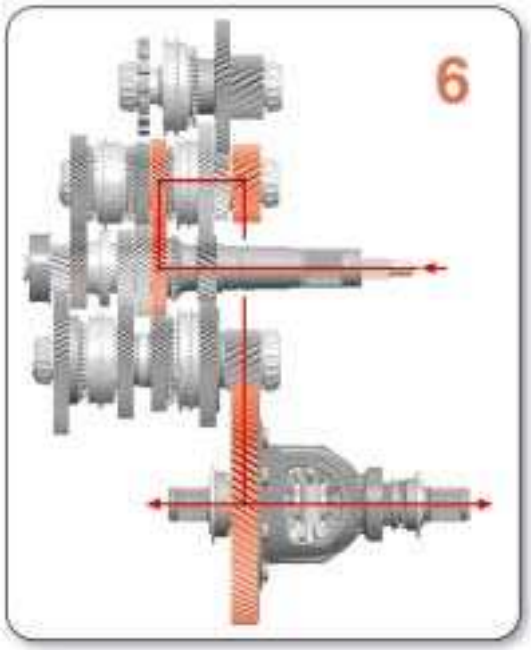

S390_039

6th gear
Clutch K2
Drive shaft 2
Output shaft 2
Differential

7th gear
Clutch K1
Drive shaft 1
Output shaft 2
Differential

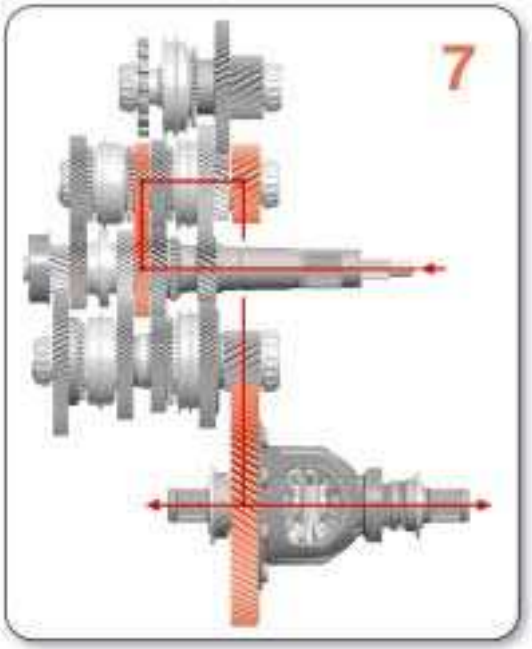

S390_040

Mechatronic module

Mechatronic unit for direct shift gearbox J743

The mechatronic unit is the central gearbox control unit.

Within it, the electronic control unit and the electrohydraulic control unit are combined to form one component.

The mechatronic unit is flanged onto the gearbox, and is an autonomous u nit.
It has a separate oil circuit, which is independent of the oil circuit for the mechanical gearbox.

The advantages of this autonomous, compact unit are:

- Apart from one sensor, all sensors and actuators are contained in the mechatronic unit.
- The hydraulic fluid is specifically adapted to the requirements of the mechatronic unit.
- Due to the separate oil circuit, no foreign material from the mechanical gearbox enters into the mechatronic unit.
- Good low-temperature behaviour, as no compromise has to be made with the requirements of the gearbox in terms of viscosity behaviour.

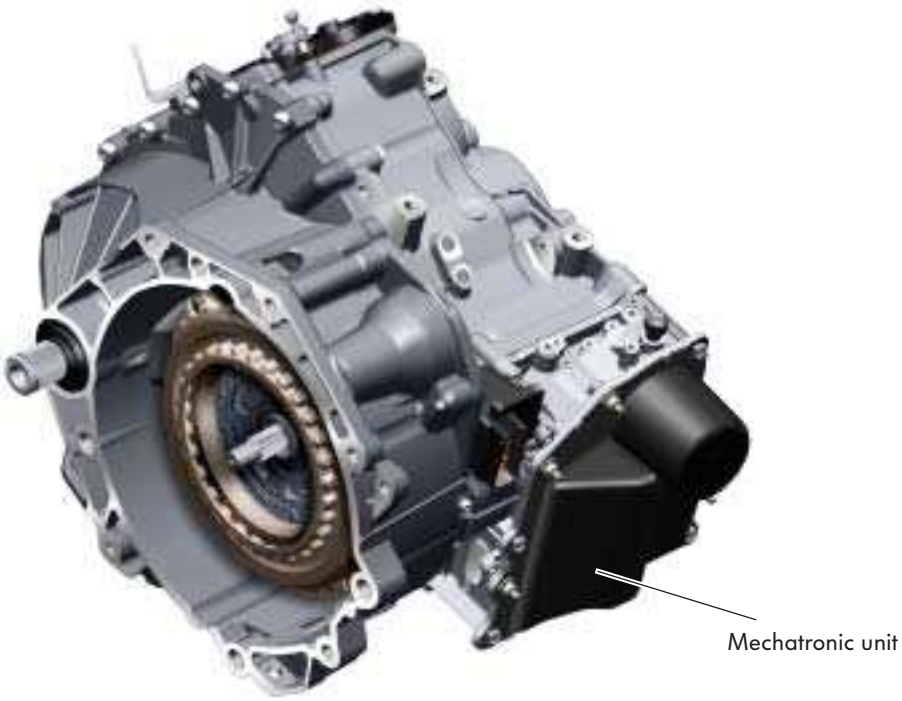

S390_041

The mechatronic unit's electronic control unit is the central gearbox control unit. All sensor signals and all signals from other control units come together here, and all actions are performed and monitored by it.
11 sensors are integrated into the electronic control unit; only the gearbox input speed sender G182 is located outside of the control unit. The electronic control unit hydraulically controls and regulates eight solenoid valves for shifting the 7 gears and for actuating the clutch.
The electronic control unit learns (adapts) the positions of the clutches and the positions of the gear selectors when a gear is engaged and takes what has been learnt into consideration for further operation of these components.

Location of sensors

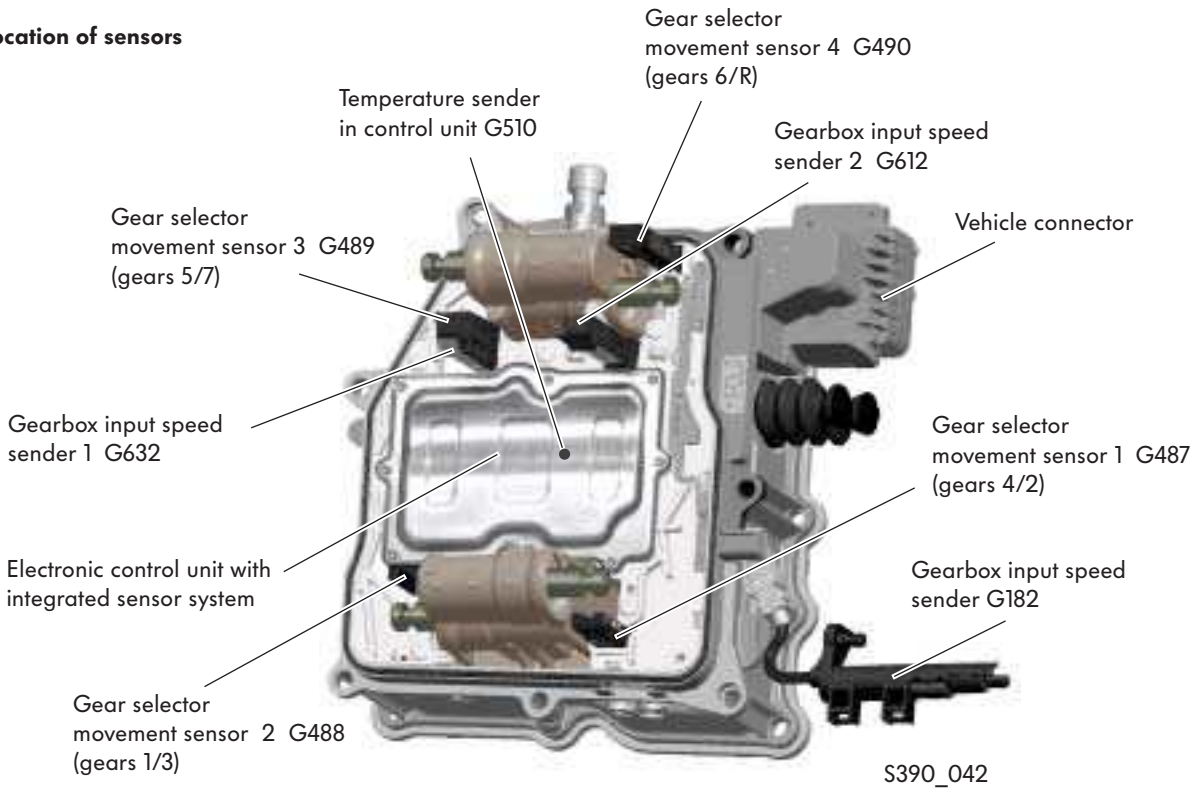

Electrohydraulic control unit

The electrohydraulic control unit

The electrohydraulic control unit is integrated into the mechatronic module. It generates the oil pressure which is required to shift the gears and to actuate the clutches.

Oil pressure generation and control

The oil pressure is generated by the hydraulic pump's motor.
An oil pressure accumulator ensures that sufficient oil pressure is always present at the solenoid valves.

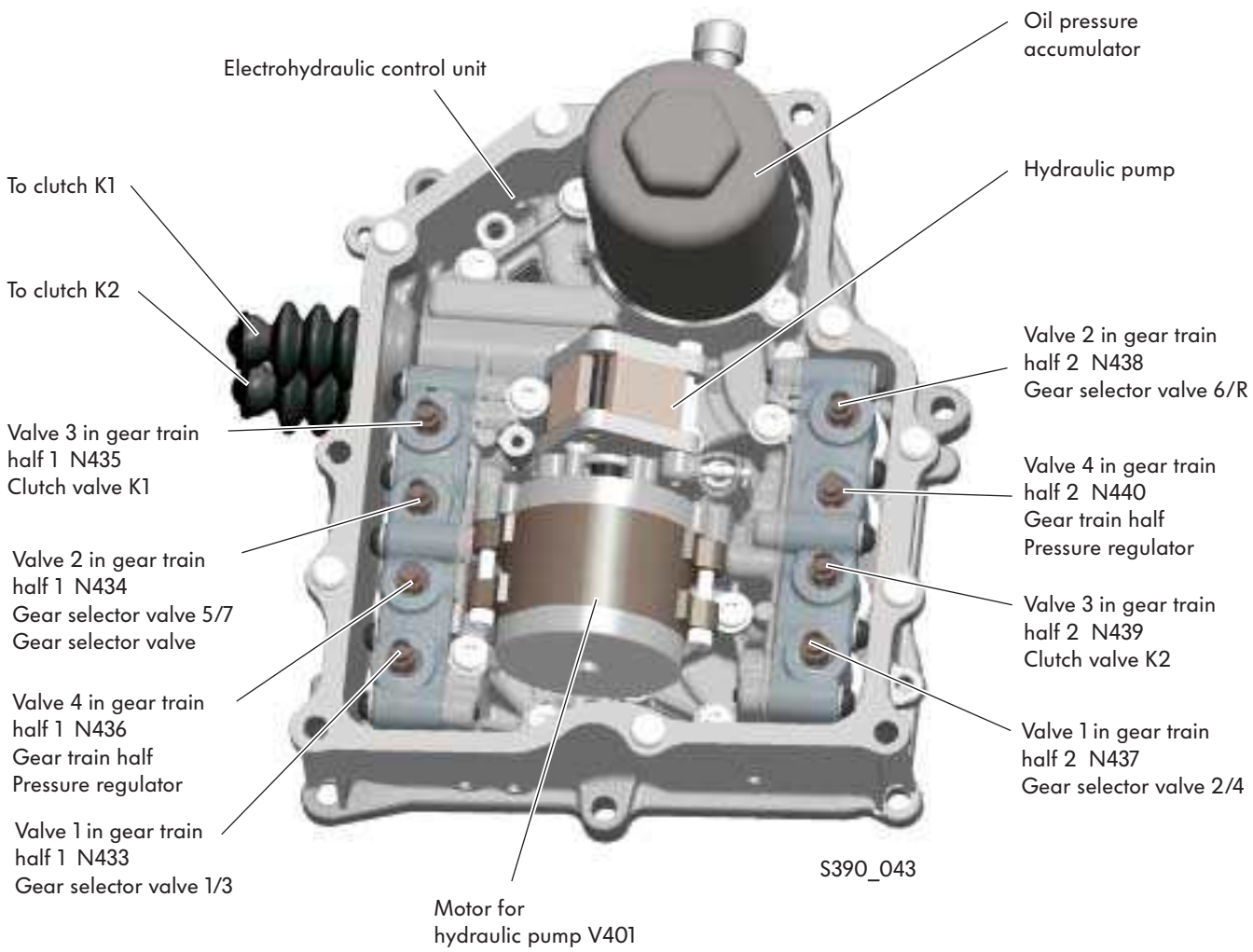

Oil circuit

The double-clutch gearbox operates with two independent oil circuits using two different oils:

- Oil circuit for mechanical gearbox
- Oil circuit for mechatronic module

Each oil circuit contains an oil which is specifically suitable for to its requirements.

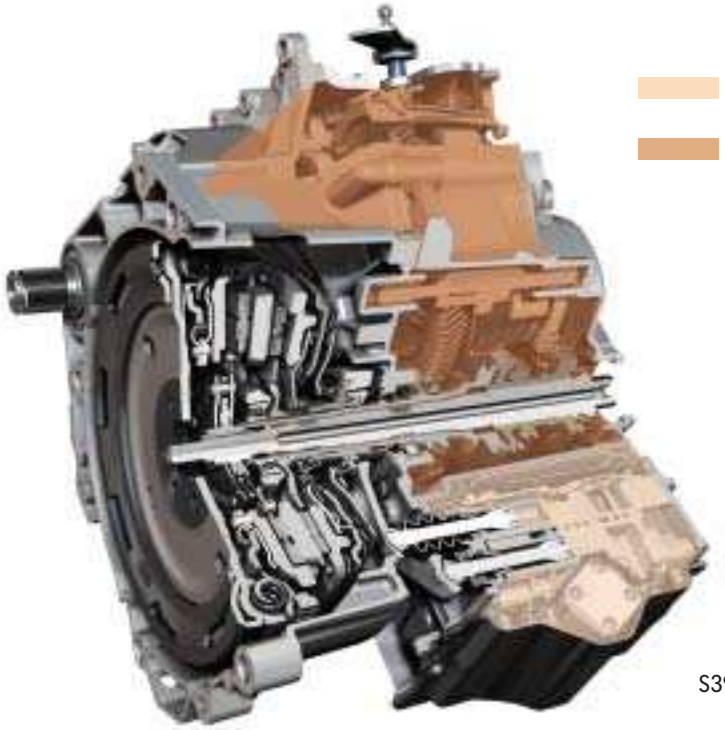

Mechatronic module

Oil circuit for mechanical gearbox

S390_080

Oil circuit - mechanical gearbox

The oil supply to the shafts and gears of the mechanical gearbox is carried out in the same way as for a normal manual gearbox. It will not therefore be dealt with in any greater detail here.

The oil volume in the mechanical gearbox is 1.7 l.

Oil circuit - mechatronic module

The oil supply for the mechatronic unit is separate from the oil circuit for the mechanical gearbox.

An oil pump delivers the oil at the pressure required to enable the hydraulic mechatronic unit components to function.

The oil volume in the mechatronic unit is 1.1 l.

For the precise capacities, please refer to the current Workshop Manual, "The 7-speed Double-clutch Gearbox 0AM".

Oil circuit – hydraulic system

Oil circuit flow chart

Basic oil circuit

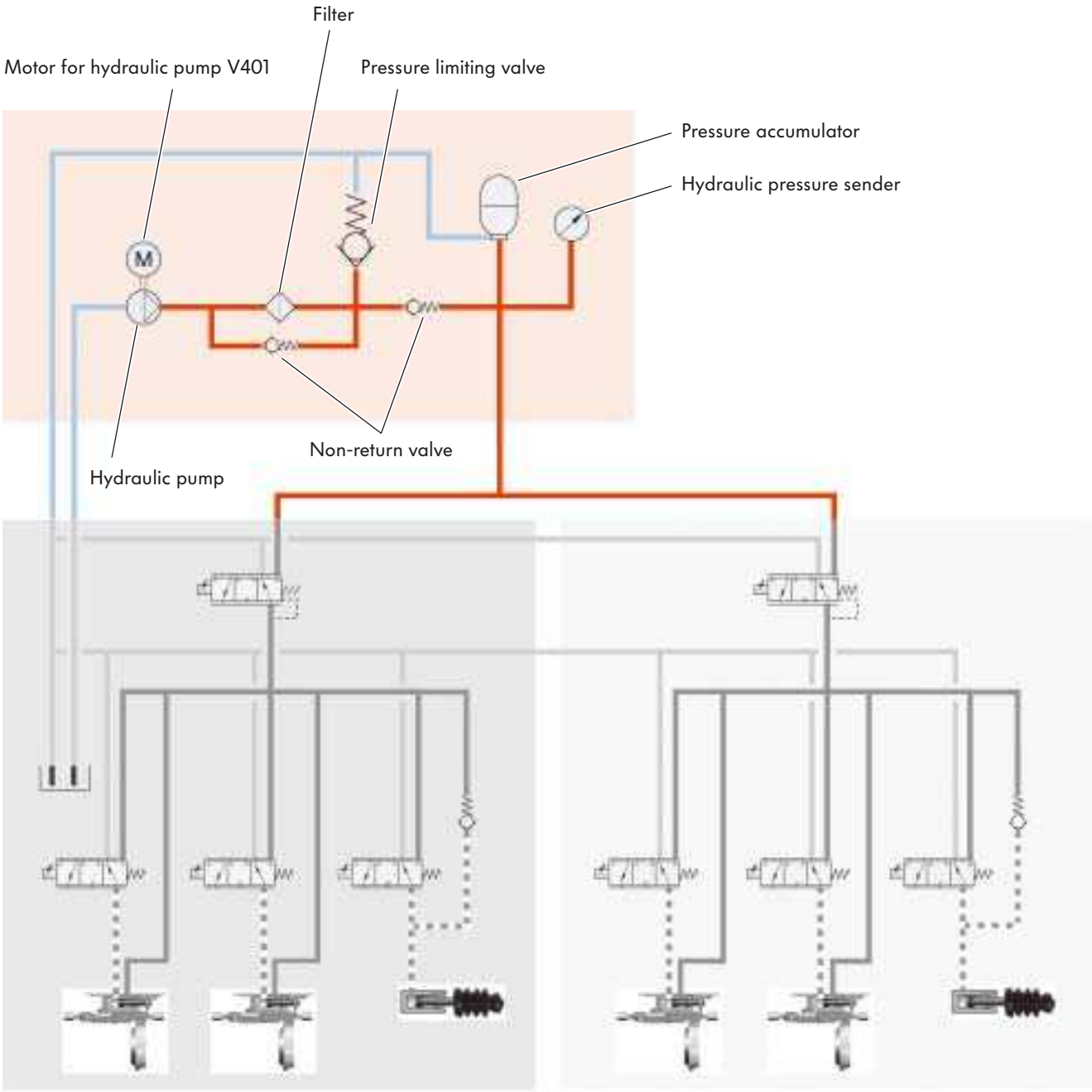

S390_098

Hydraulic pump

The hydraulic pump unit is located in the mechatronic module. It consists of a hydraulic pump and an electric motor.

The motor for the hydraulic pump is a brushless DC motor. It is actuated by the mechatronic unit's electronic control unit depending on pressure requirements. It drives the hydraulic pump via a coupling.

The hydraulic pump operates according to the principle of a gear pump. It intakes the hydraulic oil and pumps it into the oil circuit at a pressure of approx. 70 bar.

The hydraulic oil is pumped from the intake side to the pressure side between the walls of the pump housing and the tooth gaps.

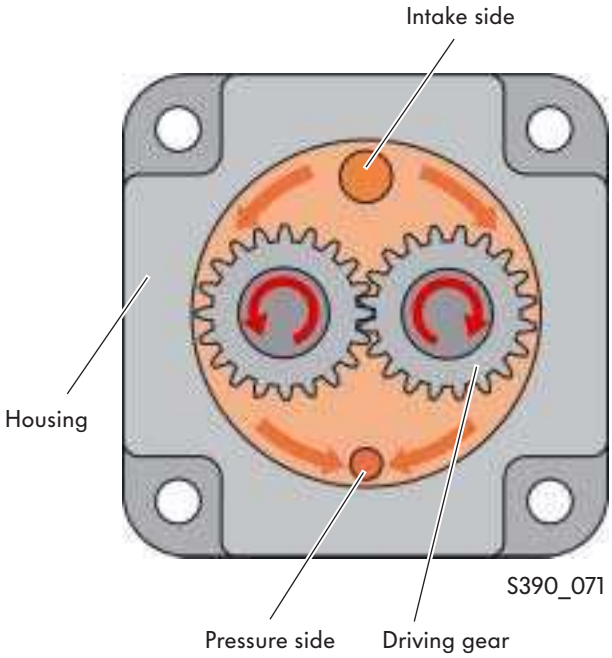

Motor for hydraulic pump V401

Design

Like conventional, smaller DC electric motors, the brushless DC motor also consists of a stator and a rotor. Whilst the stator consists of permanent magnets and the rotor of electromagnets in the conventional, smaller electric motor, the opposite is true in the case of the brushless DC motor.
The rotor consists of 6 permanent magnet pairs and the stator of 6 electromagnet pairs.

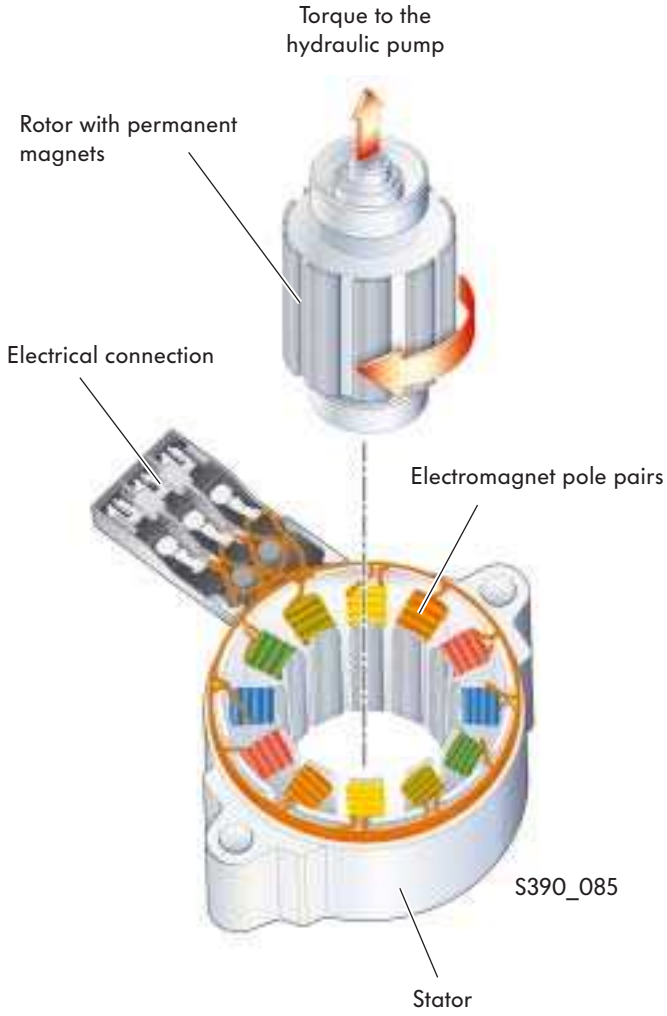

How it works

In the conventional DC motor, commutation (current direction change-over) takes place via ring contacts.

Commutation in the brushless DC motor is carried out by the mechatronic unit's electronic control unit and is therefore contact-free.

The stator coils are actuated in such a way that a rotating magnetic field occurs in the stator coils.
The rotor follows this magnetic field and is therefore caused to rotate.

Thanks to contact-free commutation, the DC motor runs entirely wear-free, with the exception of bearing wear.

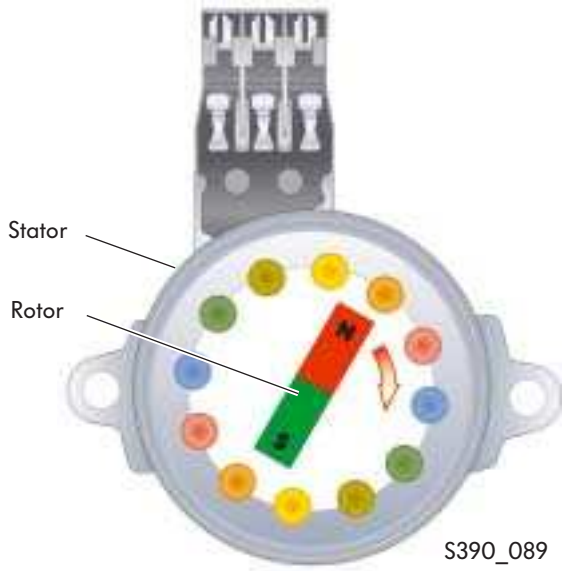

Electrical actuation

So that a rotational movement is carried out, the mechatronic unit control unit switches between the possible phases in the individual pole pairs within good time. The magnetic field changes.
The rotor is therefore constantly compelled to turn itself and therefore carries out a rotational movement.

The schematic shows the design of the circuit using the example of a wound coil.

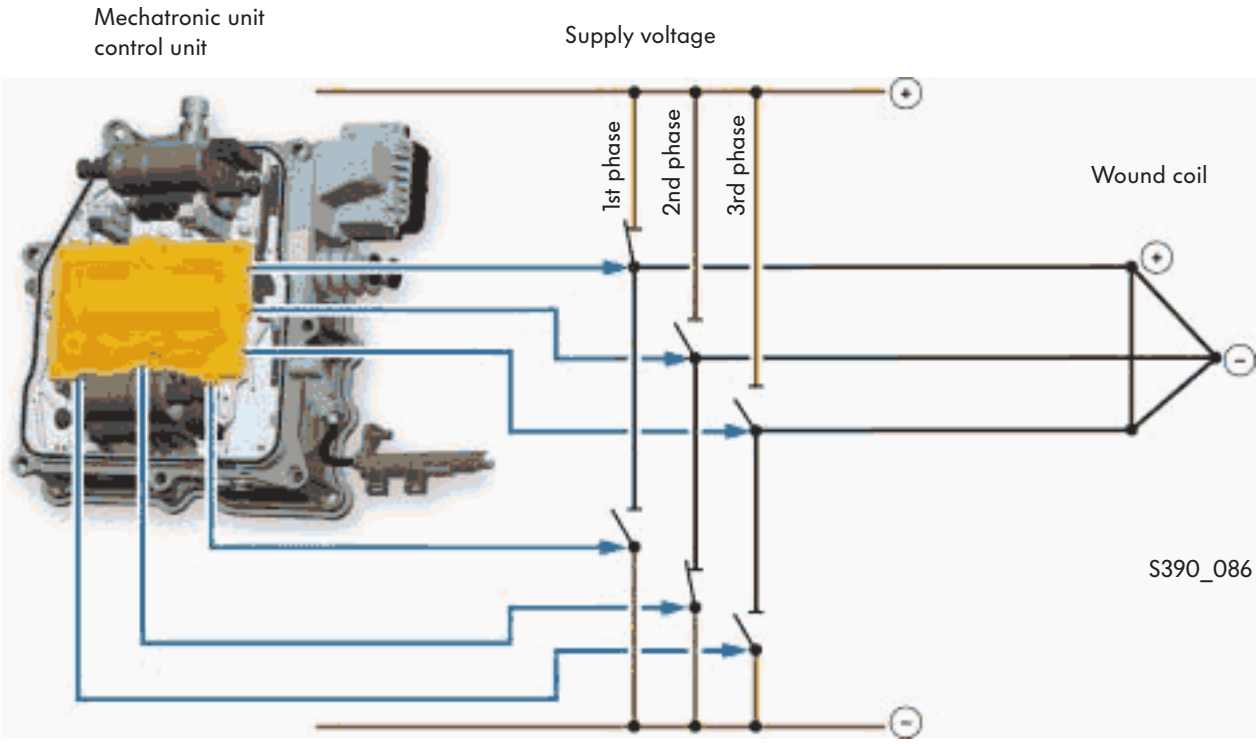

Legend

1st phase – positively switched

2nd phase – negatively switched

3rd phase - open

Oil circuit – hydraulic system

Gearbox hydraulic pressure sender G270 and pressure limiting valve

The hydraulic pump pumps the hydraulic oil through the filter towards the pressure limiting valve, the pressure accumulator and the hydraulic pressure sender.
When the hydraulic oil pressure at the pressure limiting valve and the hydraulic pressure sender reaches approx. 70 bar, the control unit switches the electric motor and therefore the hydraulic pump off.
The bypass ensures that the system functions if the filter channel is clogged.

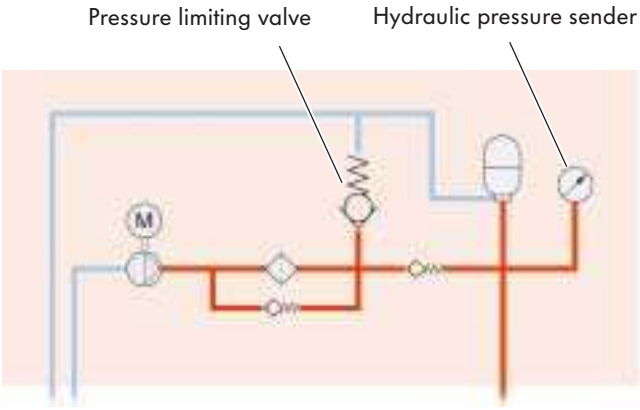

S390_100

Pressure accumulator

The pressure accumulator is designed as a gas pressure accumulator.
It provides the hydraulic system with oil pressure when the hydraulic pump is switched off.
Its storage volume is 0.2 litres.

S390_096

Oil circuit flow chart

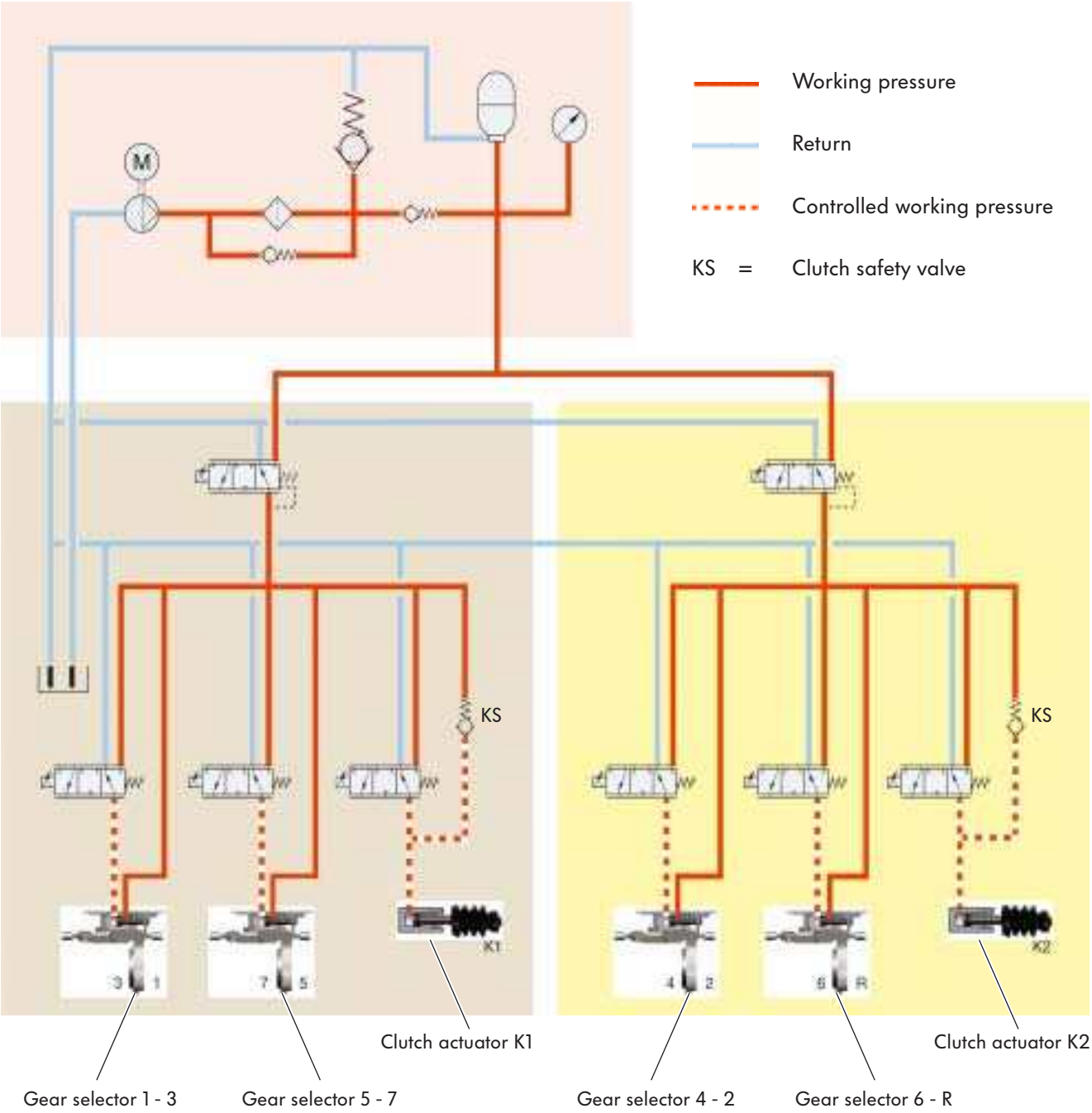

S390_048

Legend

N433	Valve 1 in gear train half 1	N437	Valve 1 in gear train half 2
N434	Valve 2 in gear train half 1	N438	Valve 2 in gear train half 2
N435	Valve 3 in gear train half 1	N439	Valve 3 in gear train half 2
N436	Valve 4 in gear train half 1	N440	Valve 4 in gear train half 2

The clutch safety valves enable the clutches to be drained and therefore opened in the event of a fault.

Oil circuit – hydraulic system

Task and function of the solenoid valves in the oil circuit

Gear train half pressure control solenoid valves

The gear train half pressure control solenoid valves control the oil pressure for gear train halves 1 and 2. If a fault is detected in a gear train half, the pressure control solenoid valve can shut off the corresponding gear train half.

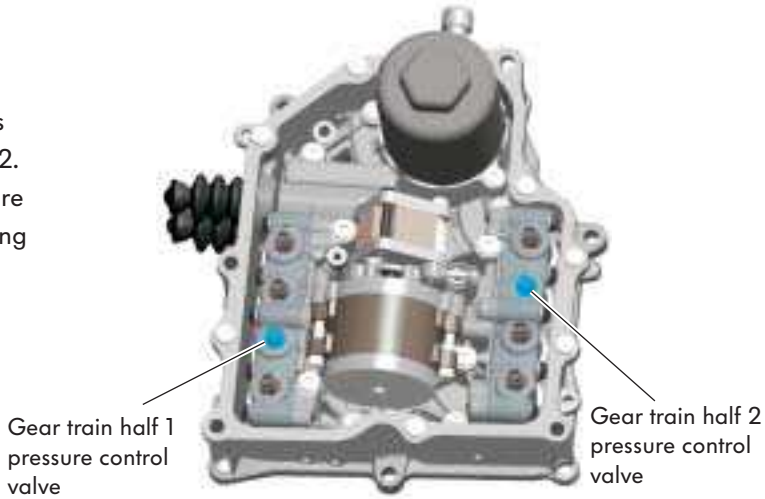

S390_101

Gear selector solenoid valves

The gear selector solenoid valves control the volume of oil to the gear selectors. Each gear selector shifts 2 gears. If no gear is engaged, the gear selectors are held in the neutral position via oil pressure.
In selector lever position "P" and when the ignition is switched off, 1st gear and reverse gear are engaged.

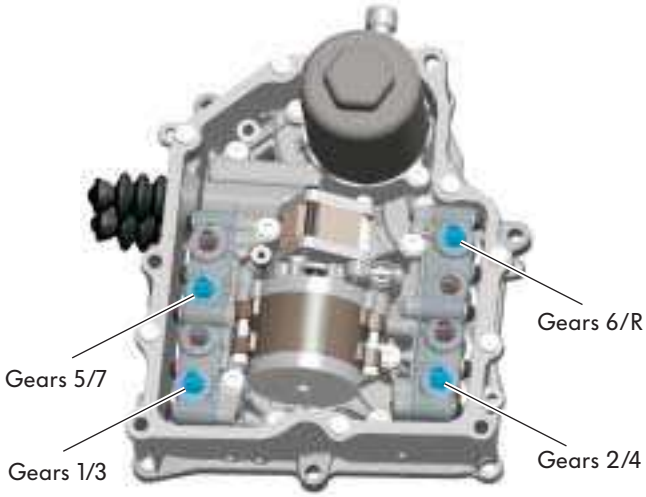

S390_102

Clutch actuator solenoid valves

The clutch actuator solenoid valves control the volume of oil to the clutch actuators. The clutch actuators actuate clutches K1 and K2.
When not supplied with current, the solenoid valves and the clutches are open.

S390_103

Shifting the gears

As in the case of conventional manual gearboxes, the gears are shifted using selector forks. Each selector fork shifts two gears.

The selector forks are mounted on both sides in the gearbox housing.

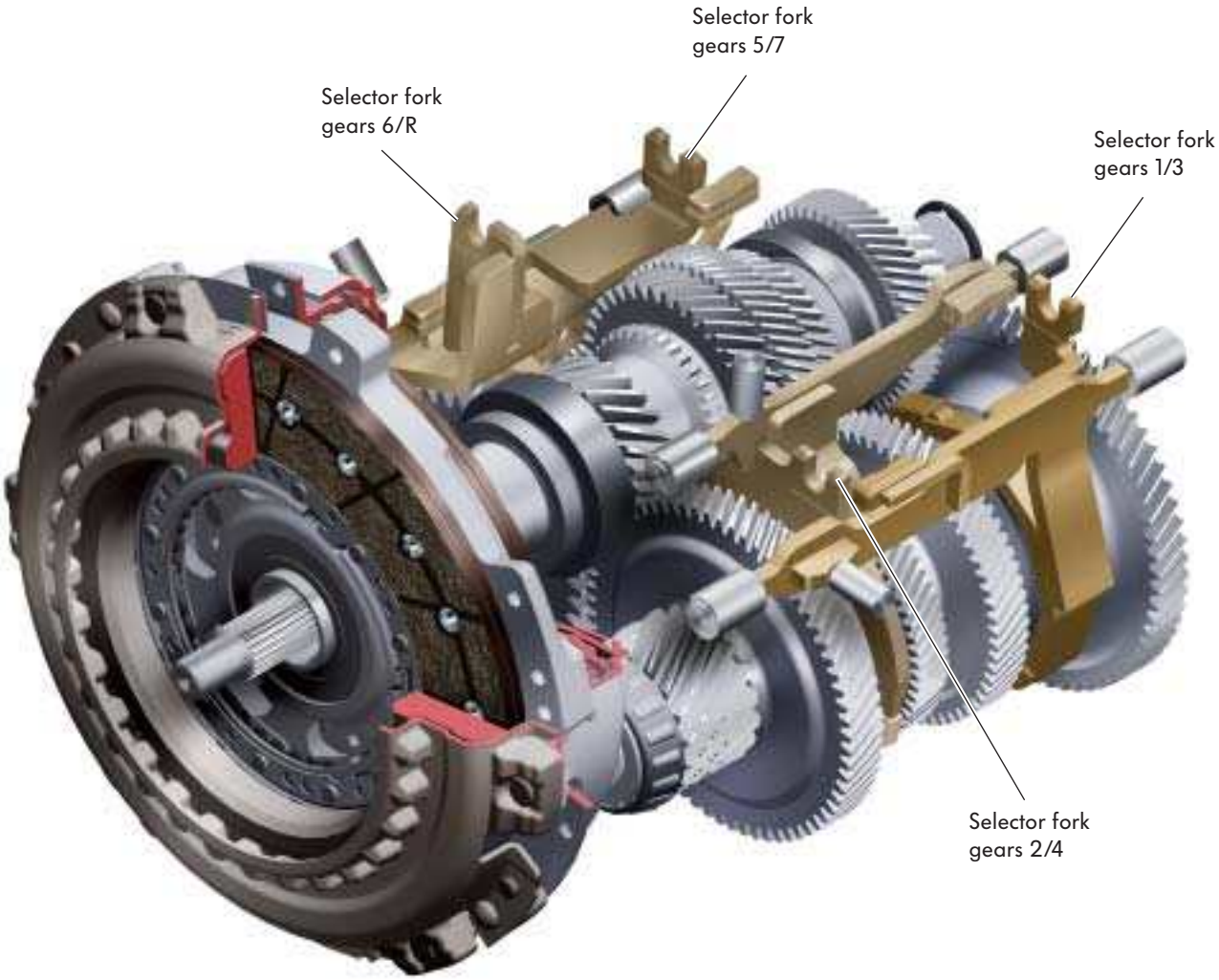

S390_058

Oil circuit – hydraulic system

Shifting the gears

When changing gears, the selector forks are moved via the gear selectors integrated into the mechatronic unit.

Gear selectors and selector forks

The gear selector piston is connected to the selector fork. To change gears, oil pressure is applied to the gear selector piston, thereby moving it. When it moves, it also moves the selector fork and the sliding sleeve. The sliding sleeve actuates the synchronising hub and the gear is engaged.

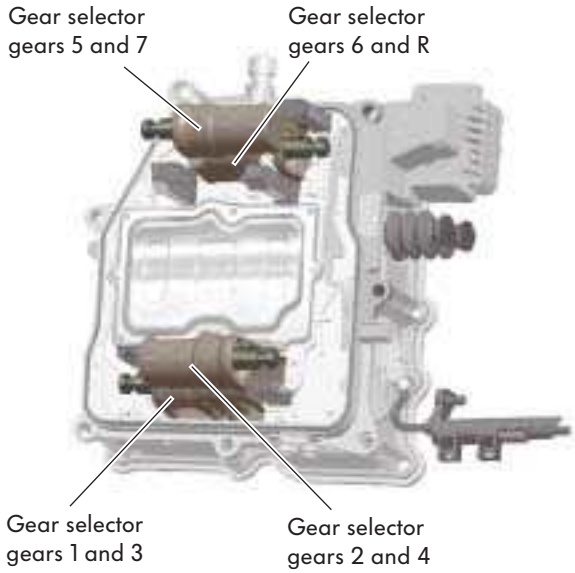

S390_107

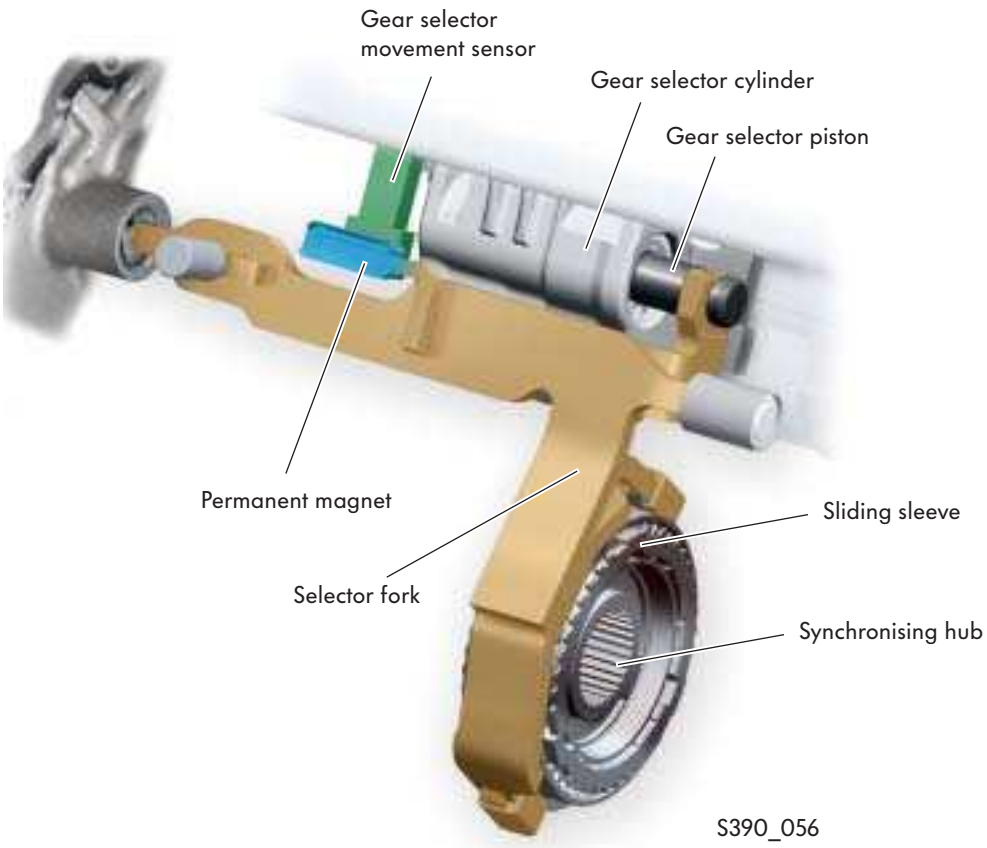

S390_056

Via the permanent magnet and the gear selector movement sensor, the mechatronic unit detects the new position of the selector fork.

Gear changes

As in the case of the direct shift gearbox 02E, the selector forks are actuated hydraulically.
To change the gears, the mechatronic electronic control unit actuates the corresponding gear selector solenoid valve.

How it works

Changing to 1st gear is shown here as an example.

Initial position

The gear selector piston is held in neutral position "N" via the oil pressure controlled by gear selector solenoid valve N433 for gears 1 and 3. No gear is engaged.
Valve 4 in gear train half 1 N436 controls the oil pressure in gear train half 1.

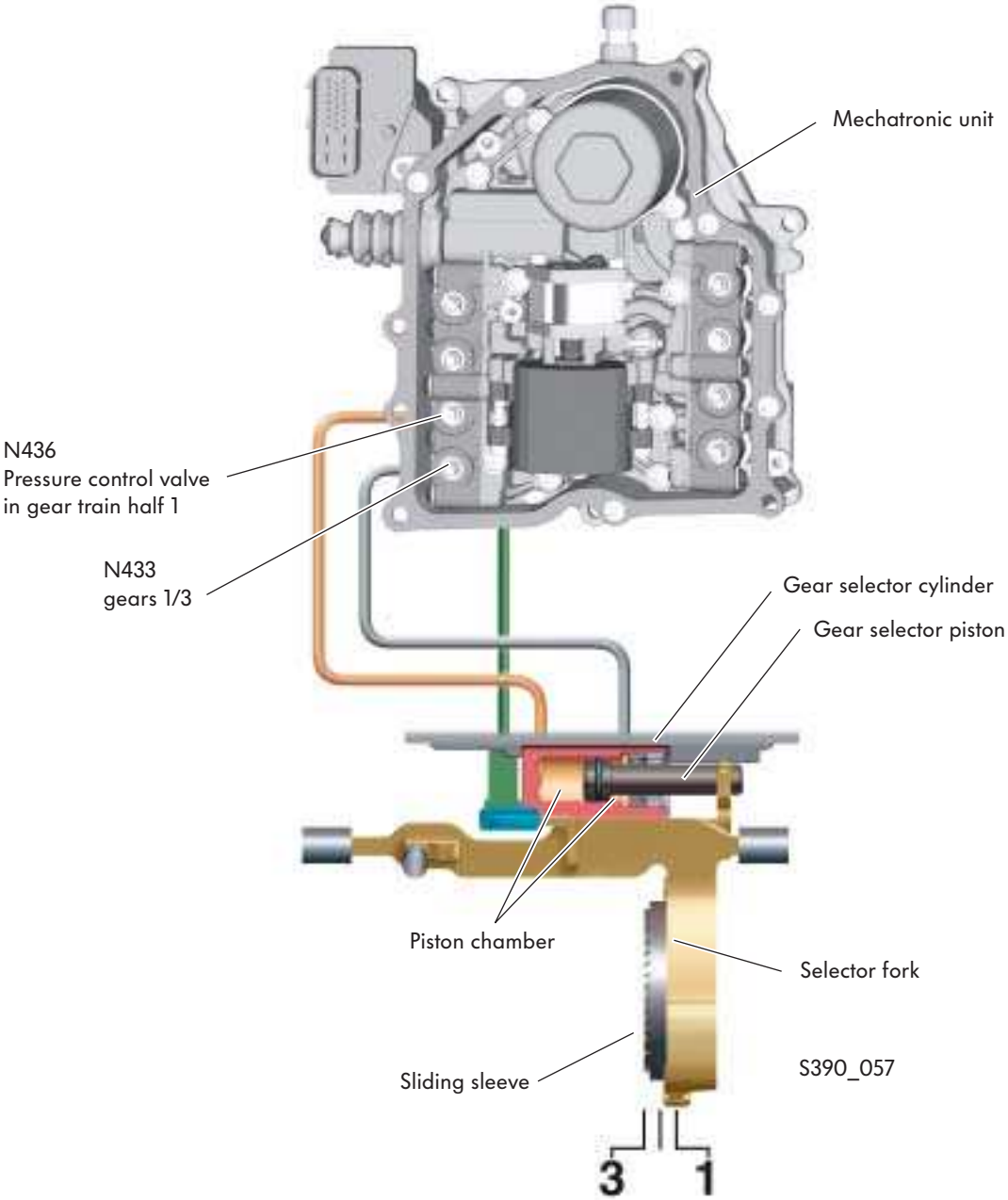

Oil circuit – hydraulic system

Changing to 1st gear

To change to 1st gear, the gear selector valve increases the oil pressure in the left piston chamber. As a result of this, the gear selector piston is pushed to the right. As the selector fork and the sliding sleeve are connected to the gear selector piston, they also move to the right.
Due to the sliding sleeve's movement, 1st gear is engaged.

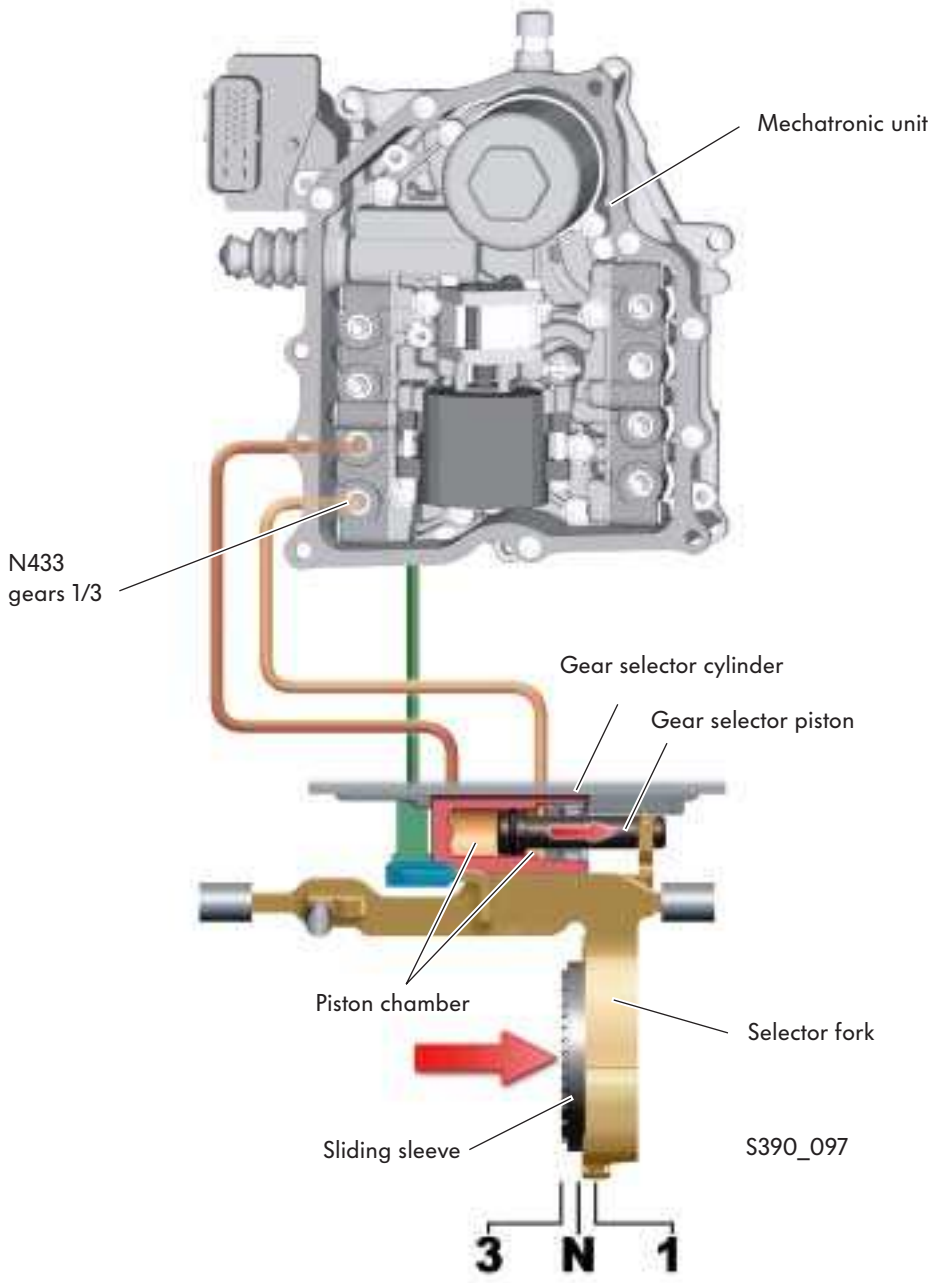

Clutch actuators

Clutches K1 and K2 are actuated hydraulically. To achieve this, the mechatronic unit contains a clutch actuator for each clutch.

A clutch actuator consists of a clutch actuator cylinder and a clutch actuator piston. The clutch actuator piston actuates the clutch engaging lever. The clutch actuator piston is equipped with a permanent magnet, which is required by the clutch travel sender to detect the piston position.
To prevent detection of the piston position from being impaired, the actuator cylinder and the actuator piston must not be magnetic.

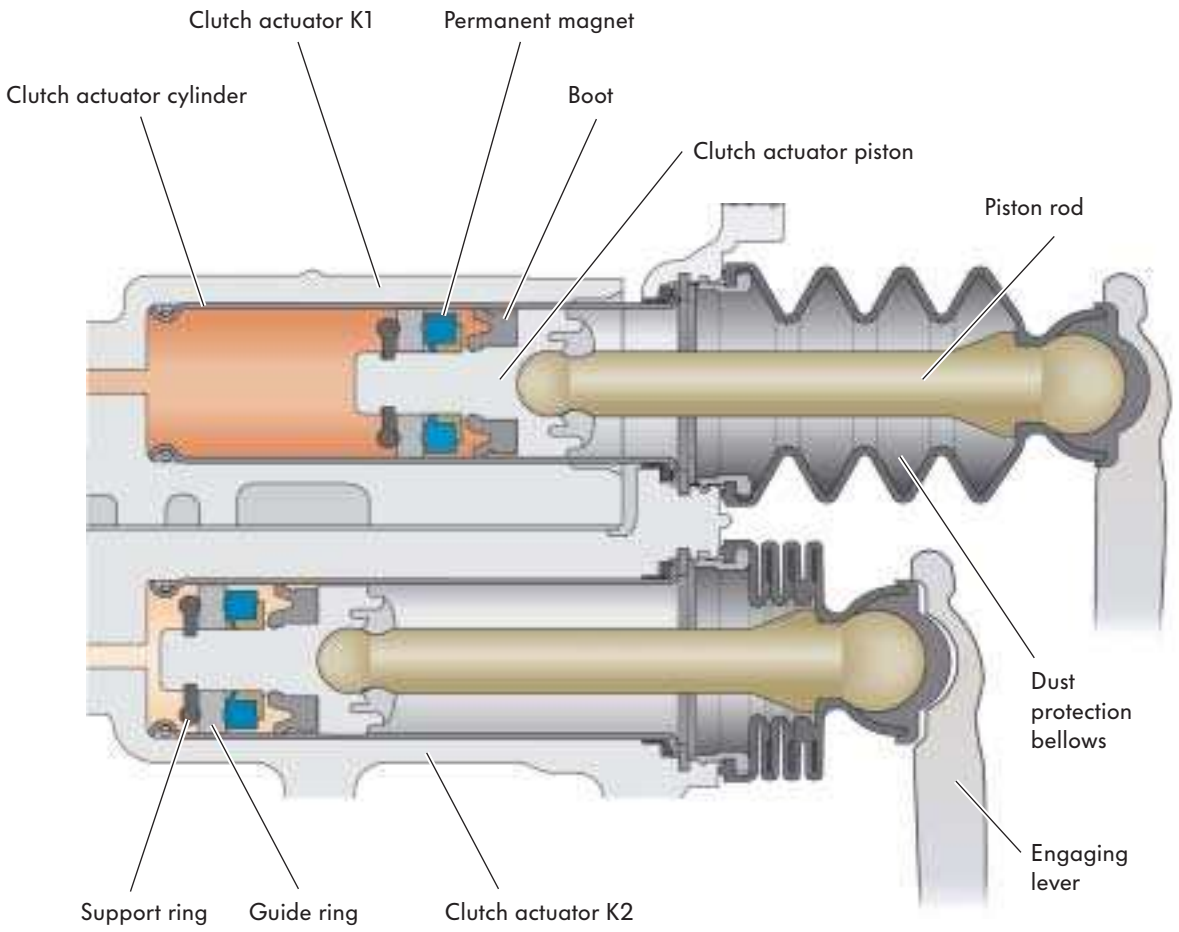

S390_092

Clutch operation

To actuate the clutches, the mechatronic electronic control unit actuates the solenoid valve

- N435 valve 3 in gear train half 1 for clutch K1 and
- N439 valve 3 in gear train half 2 for clutch K2.

How it works

Actuation of K1 is shown here as an example.

Clutch not actuated

The clutch actuator piston is in the resting position. The solenoid valve N435 is open in the return flow direction. The oil pressure from the gear train half pressure control valve N436 flows into the mechatronic unit's oil reservoir.

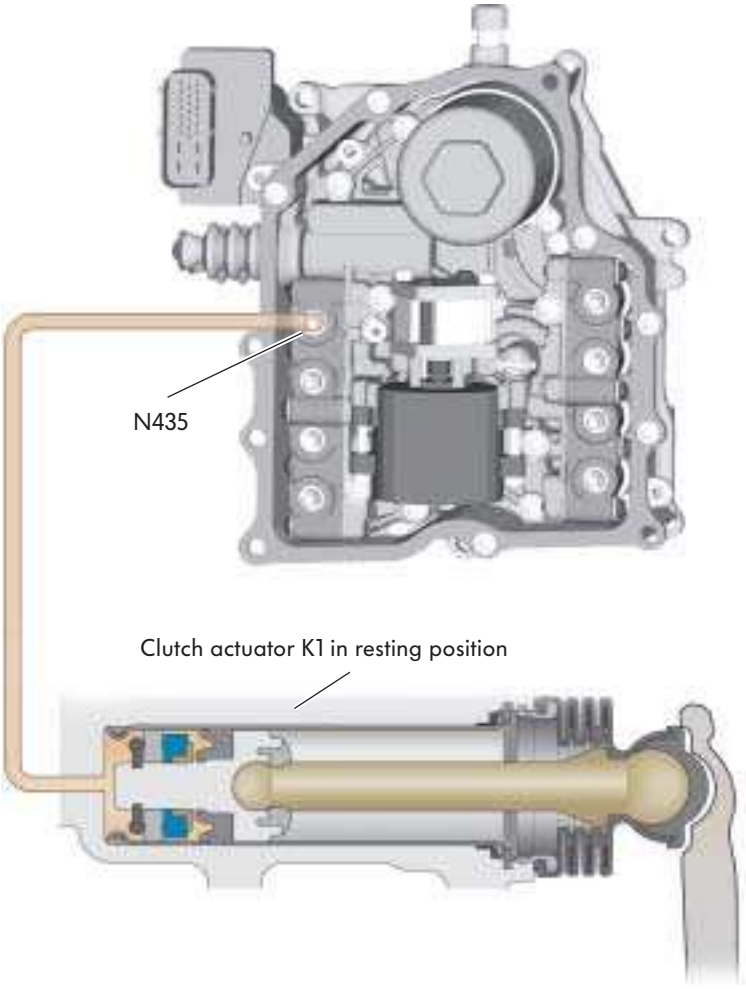

S390_093

Clutch actuated

If clutch K1 is to be actuated, the solenoid valve N435 is actuated by the electronic control unit. When actuated, it opens the oil channel to the clutch actuator, and oil pressure is built up at the rear of the clutch actuator piston. The clutch actuator piston moves and thereby actuates the K1 clutch engaging lever. Clutch K1 is closed. The control unit receives a signal regarding the precise position of the clutch via clutch travel sender 1 G167.

Clutch slip, the speed difference between the gearbox input speed and drive shaft speed, is achieved by solenoid valve N435 by controlling the oil pressure between the clutch actuator and the return flow.

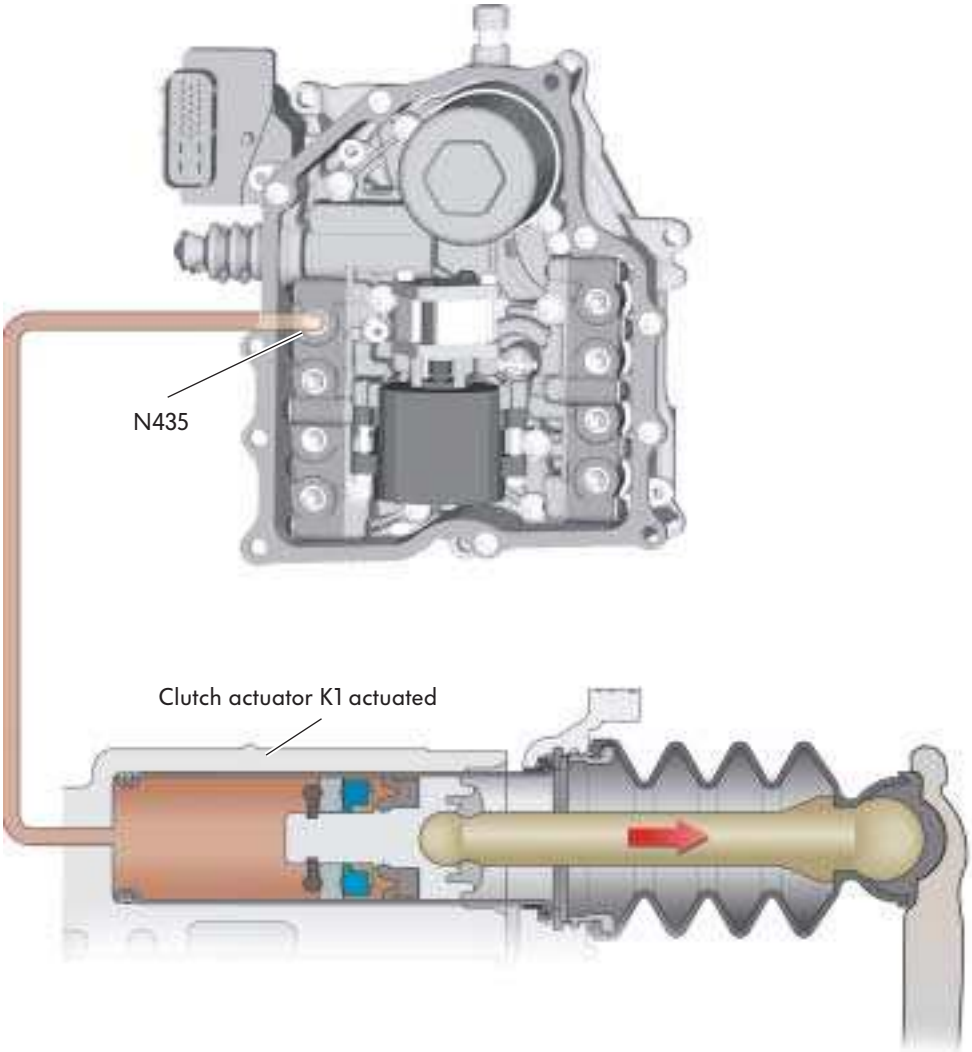

S390_094

Gearbox management system

Overview of the system

Sensors

Gearbox input
speed sender G182

Gearbox input speed sender 1 G632
Gearbox input speed sender 2 G612

Clutch travel sender 1 G617
Clutch travel sender 2 G618

Gear selector movement sensor 1 G487
Gear selector movement sensor 2 G488
Gear selector movement sensor 3 G489
Gear selector movement sensor 4 G490

Gearbox hydraulic pressure sender G270

Temperature sender in control unit G510

Tiptronic switch in steering wheel E389

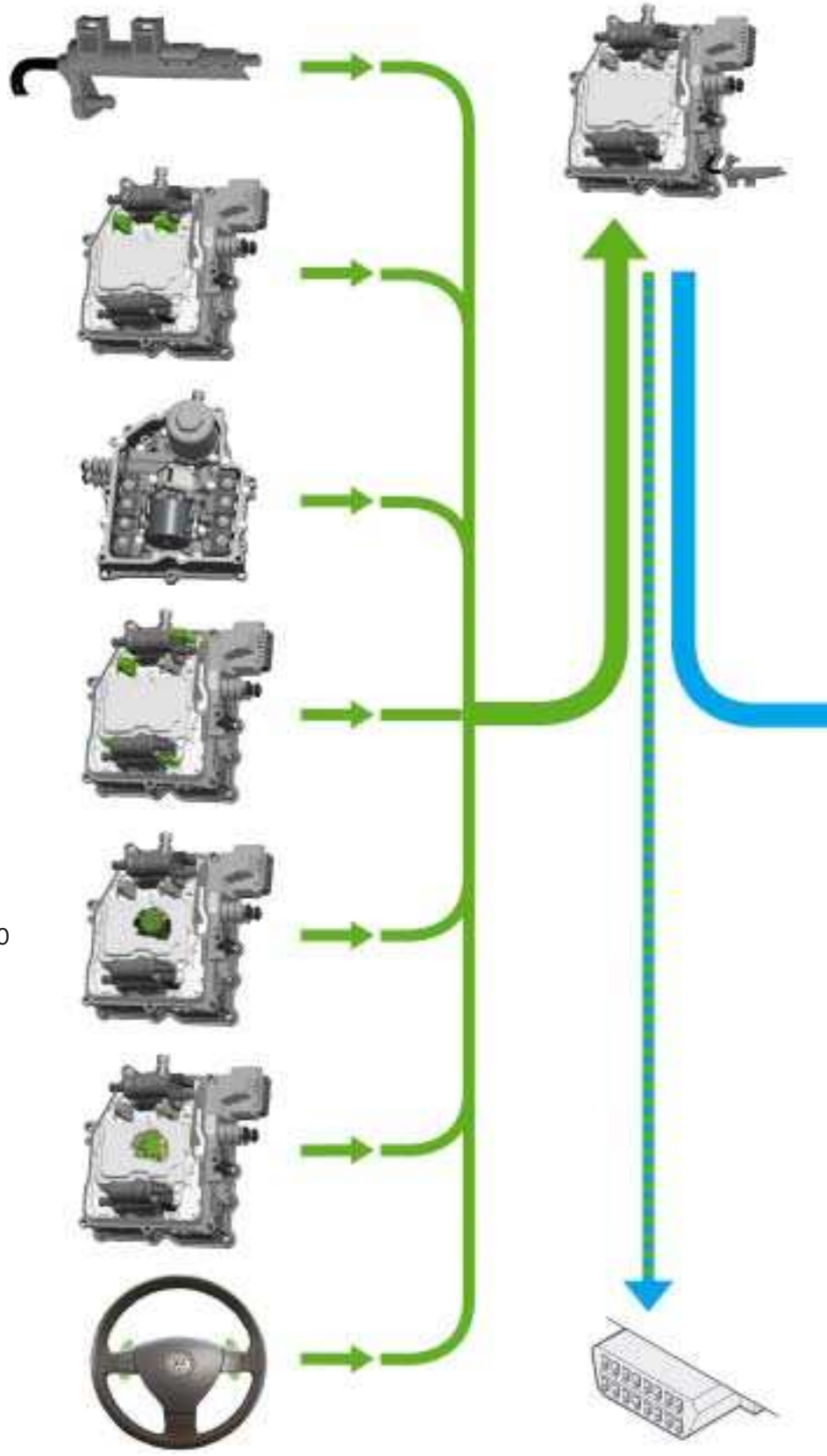

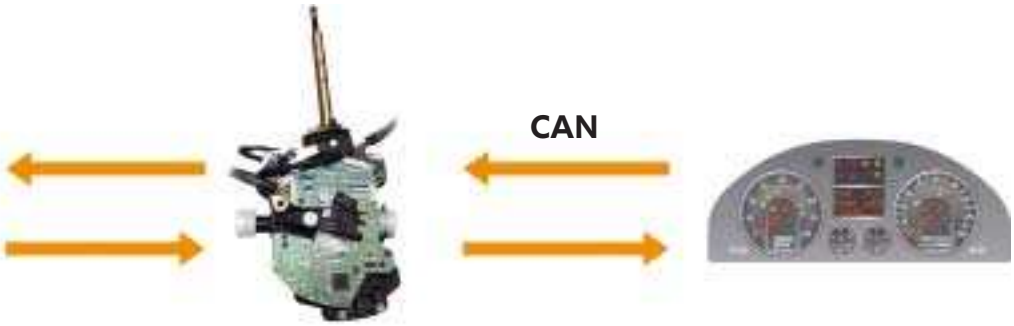

Selector lever E313

Dash panel insert J285

Actuators

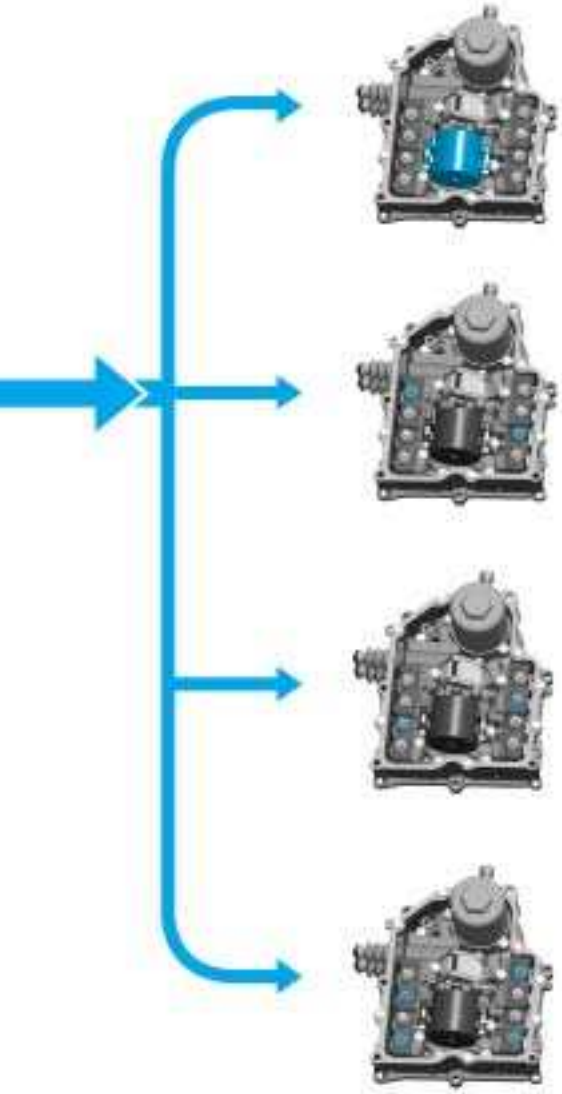

Motor for hydraulic pump V401

Valve 3 in gear train half 1 N435
Valve 3 in gear train half 2 N439

Valve 4 in gear train half 1 N436
Valve 4 in gear train half 2 N440

Valve 1 in gear train half 1 N433
Valve 2 in gear train half 1 N434
Valve 1 in gear train half 2 N437
Valve 2 in gear train half 2 N438

S390_053

Sensors

Clutch travel sender 1 G617, clutch travel sender 2 G618

The clutch travel senders are located in the mechatronic unit above the clutch actuators.

The double clutch control system requires reliable and precise recording of the current clutch actuation status.

For this reason, contact-free sensor technology is used to record clutch travel.

Contact-free position recording increases the reliability of the sensor functions. Measured value falsification caused by wear and vibrations is avoided.

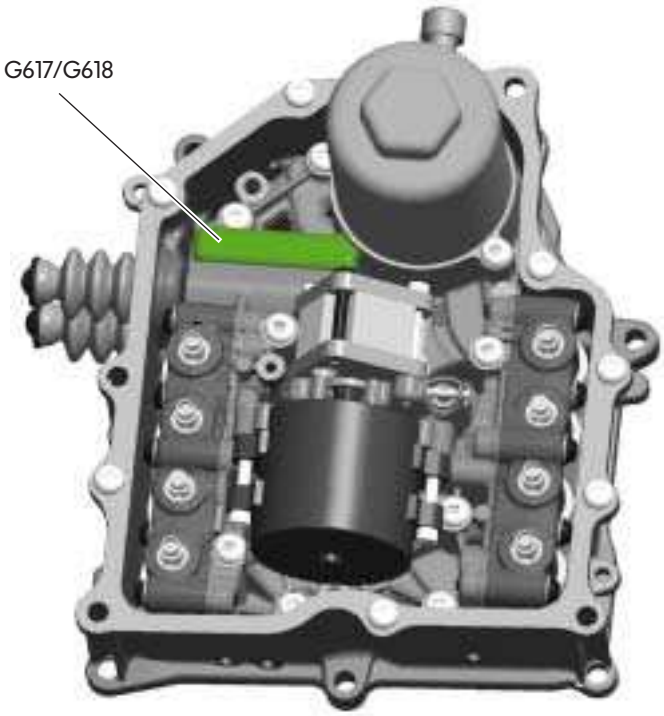

S390_050

Signal use

The control unit requires these signals to control the clutch actuators.

Effects of signal failure

If clutch travel sender 1 G617 fails, gearbox path 1 is shut off. Gears 1, 3, 5 and 7 can no longer be engaged.

If clutch travel sender 2 G618 fails, gears 2, 4, 6 and R can no longer be engaged.

Clutch travel sender

Design

A clutch travel sender consists of:

- An iron core, around which the primary coil is wound
- Two secondary evaluation coils
- A permanent magnet, which is located on the clutch actuator piston, and
- The sensor electronics

How it works

An alternating voltage is applied to the primary coil. As a result of this, a magnetic field is built up around the iron core. If the clutch is actuated, the clutch actuator piston moves through the magnetic field with the permanent magnet. Due to the permenant magnet's movement, a voltage is induced in the secondary evaluation coils. The level of the voltage induced in the left and right evaluation coils is dependent on the position of the permanent magnet. Via the level of the voltage in the left and right evaluation coils, the sensor electronics detect the position of the permanent magnet and therefore the position of the clutch actuator piston.

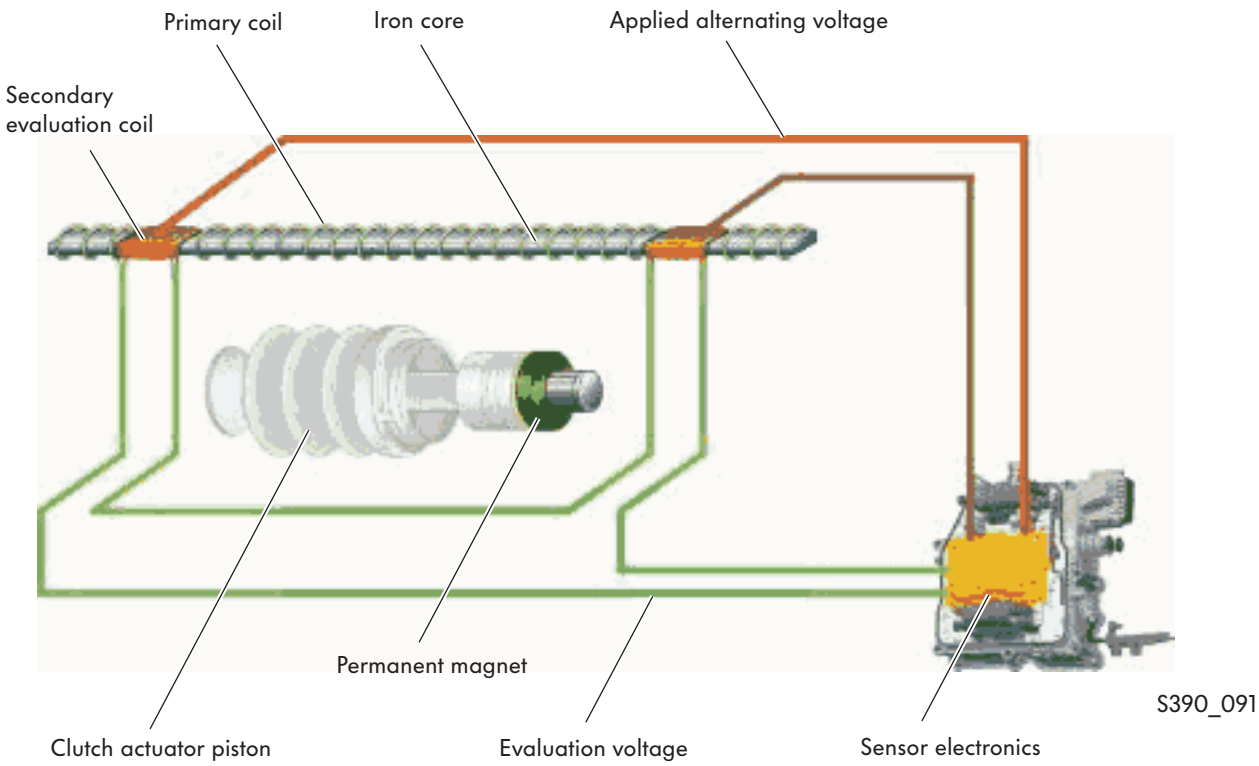

Gearbox input speed sender G182

The gearbox input speed sender is inserted into the gearbox housing.
It is the only sensor located outside of the mechatronic unit.
It electronically scans the starter ring gear and thereby records the gearbox input speed.

The gearbox input speed is identical to the engine speed.
The sender operates according to the Hall principle.

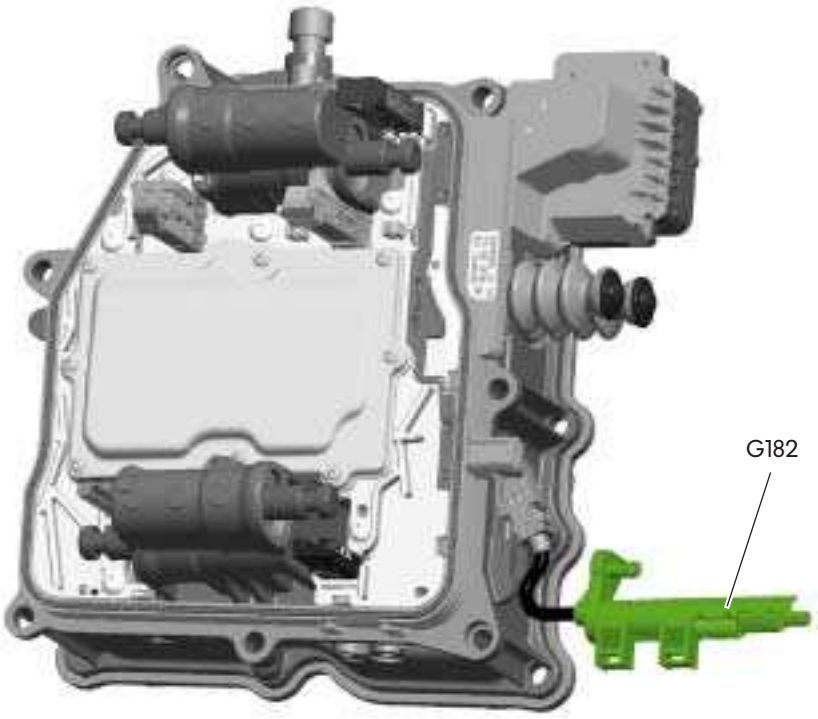

S390_073

Signal use

The control unit requires the gearbox input speed signal to control the clutches and to calculate slip.
To do this, it compares the signals from the gearbox input speed sender G182 before the clutches with the signals from senders G612 and G632, which transmit speed signals from the drive shafts.

Effects of signal failure

In the event of signal failure, the control unit uses the engine speed signal as a substitute signal.
It obtains this signal from the engine control unit via the CAN bus.

Gearbox input speed sender 1 G632 and gearbox input speed sender 2 G612

Both senders are housed in the mechatronic unit.

- Sender G632 scans an impulse wheel, which is located on drive shaft 1.
  From this signal, the control unit calculates the speed of drive shaft 1.
- Sender G612 scans a gear on drive shaft 2.
  From this signal, the control unit calculates the speed of drive shaft 2.

Both senders are Hall senders.

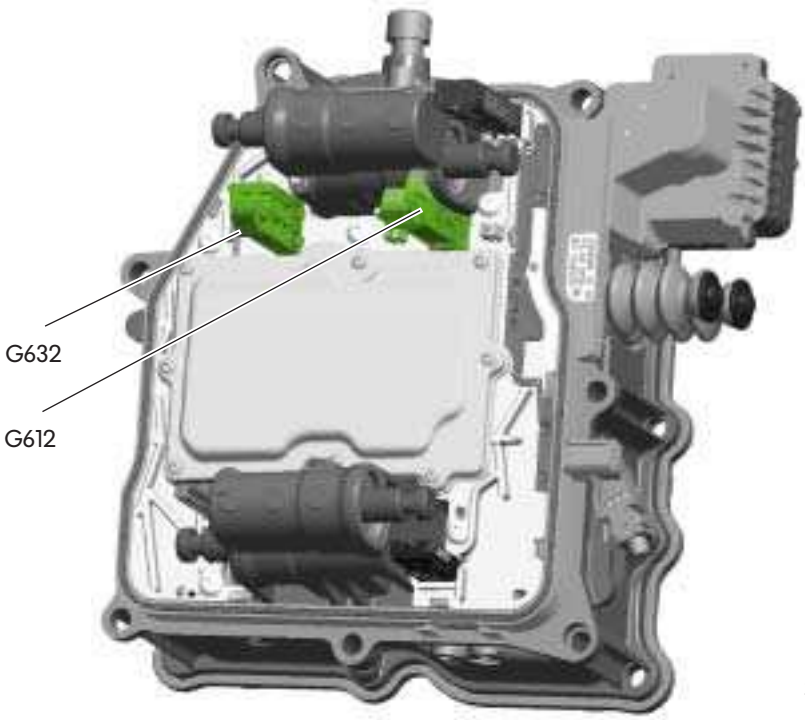

S390_049

Signal use

The speed signals from drive shafts 1 and 2 are used by the control unit to control the clutch and to calculate clutch slip.

Effects of signal failure

If sender G632 fails, gear train half 1 is shut off. The vehicle can then only be driven in gears 2, 4, 6 and R.

If sender G612 fails, gear train half 2 is shut off. The vehicle can then only be driven in gears 1, 3, 5 and 7.

Temperature sender in control unit G510

The temperature sender is located directly in the mechatronic unit's electronic control unit.

Hot hydraulic oil constantly flows around the control unit, thereby heating it. Severe heating may impair the functions of the electronics.

The sender measures the temperature directly of the components at risk. As a result, measures to reduce the oil temperature can be introduced at an early stage, thereby avoiding excessive heating.

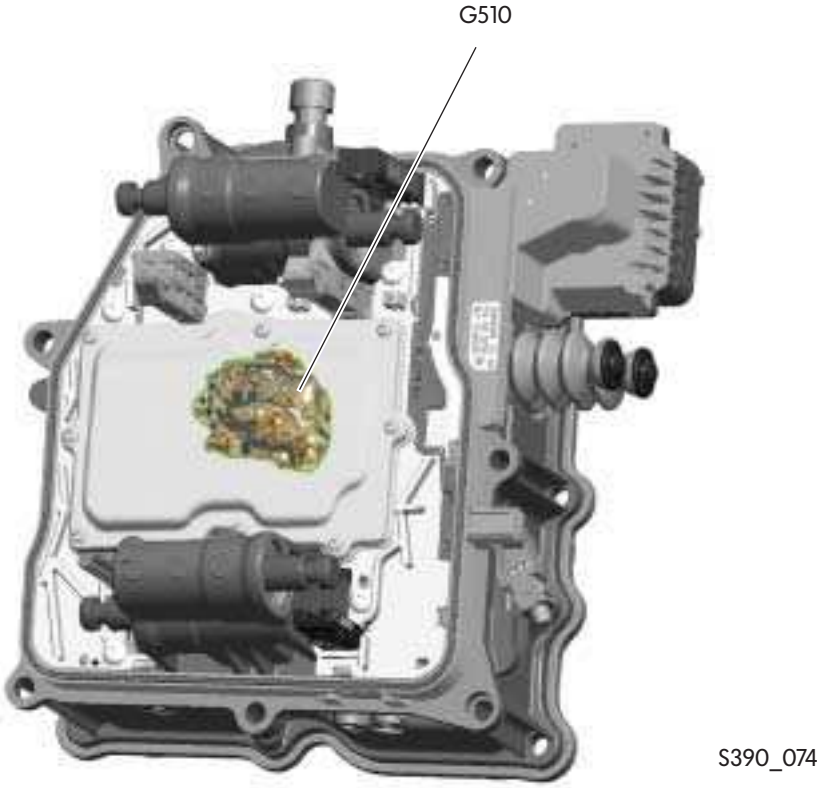

Signal use

The sender's signal is used to check the mechatronic unit's temperature.

At a temperature of 139 °C, engine torque reduction can be implemented.

Effects of signal failure

In the event of signal failure, the control unit uses an internally available substitute value.

Gearbox hydraulic pressure sender G270

The hydraulic pressure sender is integrated into the mechatronic unit's hydraulic oil circuit.
It is designed as a diaphragm pressure sender.

Further information on the hydraulic pressure sender can be found in self-study programme 308 "The Direct Shift Gearbox 02E".

S390_075

Signal use

The control unit uses the signal to control the motor for the hydraulic pump V401.
At a hydraulic oil pressure of approx. 60 bar, the motor is shut off according to the pressure sender signal, and is switched on again at approx. 40 bar.

Effects of signal failure

In the event that the signal fails, the motor for hydraulic pump runs continuously.
The hydraulic pressure is determined by the pressure control valve.

Gear selector movement sensors 1 to 4, G487 to G490

The gear selector movement sensors are located in the mechatronic unit.

On combination with the solenoids on the selector forks, they generate a signal, from which the control unit recognises the precise position of the gear selectors.

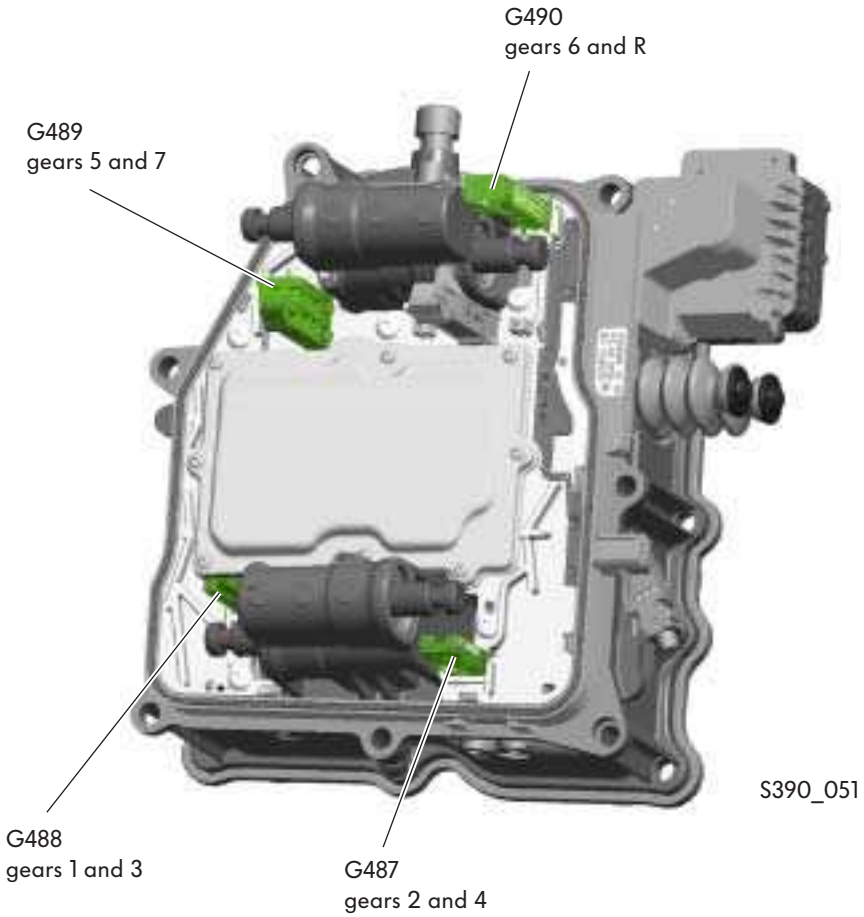

Signal use

The control unit requires the precise position of the gear selectors to control the gear selectors for changing gears.

Effects of signal failure

If a movement sensor fails, the control unit cannot detect the position of the corresponding gear selector. As a result, the control unit is unable to recognise whether or not a gear is changed via the gear selector and the selector fork.
To prevent damage to the gearbox, the gearbox path of the movement sensor which has failed is shut off in this case.

Selector lever E313

The selector lever sensor system and the control system for the selector lever lock solenoid are integrated into the selector lever.
The selector lever positions are detected by Hall sensors, which are integrated into the selector lever sensor system.
The selector lever position signals and the Tiptronic signals are transmitted via the CAN bus to the mechatronic unit and to the control unit in the dash panel insert.

Signal use

Based on the signals, the control unit detects the selector lever positions. It uses the signals to implement the driver's D-R-S or Tiptronic command and to control starter release.

Effects of signal failure

If the control unit detects no selector lever position, both clutches are opened.

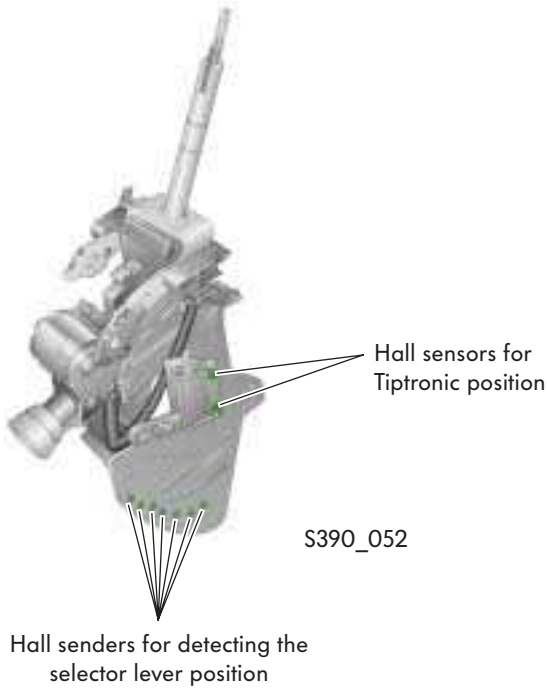

Tiptronic switches in steering to shift up and down E438 and E439

The switches are located on the right and left on the steering wheel. The gears can be shifted up and down by actuating the switches. The shift signals are transmitted from the steering column electronics control unit J527 to the mechatronic unit for direct shift gearbox J743 via the CAN bus.

Signal use

In Tiptronic mode, the gears can also be shifted up and down using the steering wheel switches.
If the Tiptronic switches on the steering wheel are actuated in automatic mode, the gearbox control system switches to Tiptronic mode.
If the Tiptronic switches on the steering wheel are no longer actuated, the gearbox control system automatically switches back to automatic mode following the expiry of a timer.

Effects of signal failure

In the event of signal failure, no Tiptronic functions are possible via the steering wheel switches.

Tiptronic shifting strategy

- Automatic upshifting on reaching the maximum engine speed
- Automatic downshifting on falling below the minimum engine speed
- Kick-down downshifting

Actuators

Clutch actuator solenoid valves

Valve 3 in gear train half 1 N435, valve 3 in gear train half 2 N439

The clutch actuator solenoid valves are located in the mechatronic unit's hydraulic module.
They are actuated by the electronic gearbox control unit. They are used to control the oil volume for actuating the clutches.

- Solenoid valve N435 controls the oil volume for clutch K1
- Solenoid valve N439 controls the oil volume for clutch K2

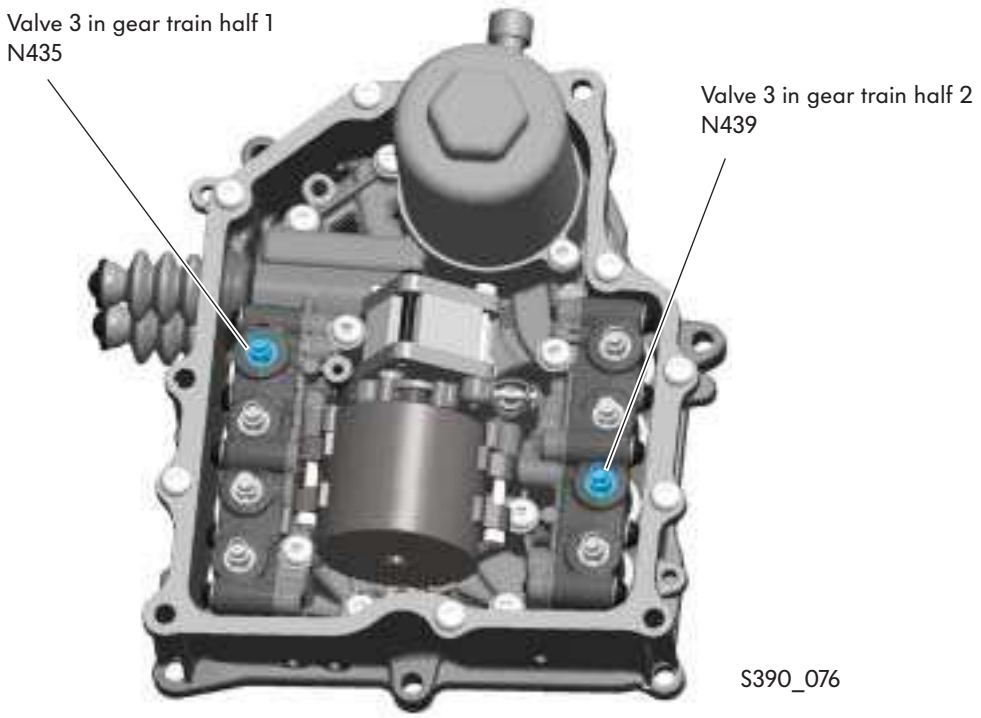

Effects of signal failure

If one of the solenoid valves fails, the corresponding gear train half is shut off.

Gear train half pressure control valves

Valve 4 in gear train half 1 N436, valve 4 in gear train half 2 N440

Both valves are solenoid valves, and are located in the mechatronic unit's hydraulic module.
Valve 4 in gear train half 1 controls the hydraulic oil pressure to the gear selectors and to the clutch actuator in gear train half 1.

Gear train half 1 is used to shift gears 1, 3, 5 and 7.
Valve 4 in gear train half 2 controls the hydraulic oil pressure to the gear selectors and to the clutch actuator in gear train half 2.

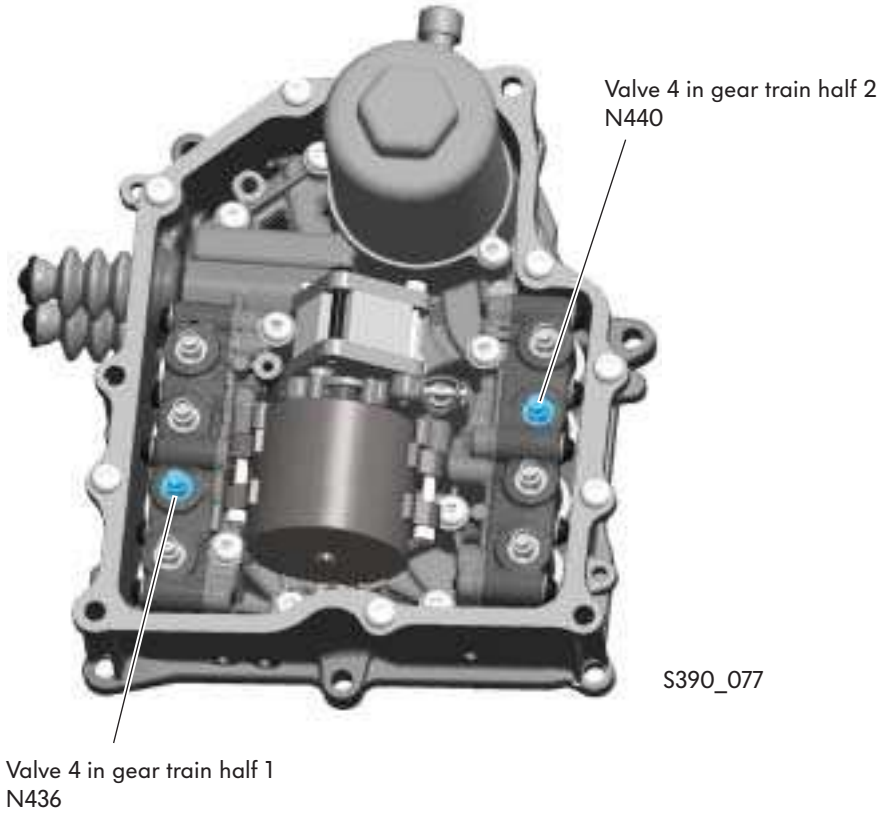

Effects of signal failure

If one of the solenoid valves fails, the corresponding gear train half is shut off, and only the gears assigned to the other gear train half can be engaged.

Gear selector solenoid valves

Valve 1 in gear train half 1 N433, valve 2 in gear train half 1 N434, valve 1 in gear train half 2 N437, valve 2 in gear train half 2 N438

The gear selector solenoid valves are located in the mechatronic unit's hydraulic module.
They are used by the gearbox control unit to control the oil volume to the gear selectors and therefore for changing gears.

- N433 gears 1 and 3, gear train half 1
- N434 gears 5 and 7, gear train half 1
- N437 gears 4 and 2, gear train half 2
- N438 gears 6 and R, gear train half 2

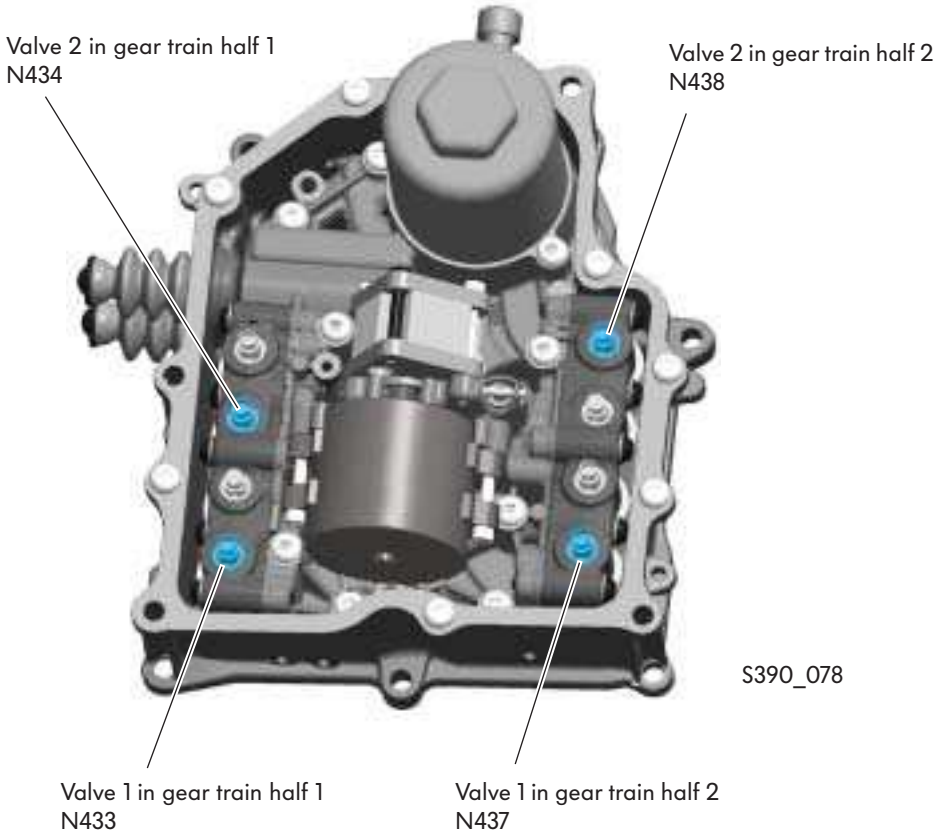

Effects of signal failure

If one of the solenoid valves fails, the corresponding gear train half is shut off.

Motor for hydraulic pump V401

The motor for the hydraulic pump is integrated into the mechatronic unit's hydraulic module.
It is actuated by the gearbox control unit subject to requirements.

The control unit shuts the motor off when the hydraulic pressure in the system has reached 60 bar, and switches it on again when the pressure has fallen to 40 bar.

S390_079

Effects of signal failure

If the motor cannot be actuated, the hydraulic pressure drops and the clutches open independently due to the pressure plates' spring force.

Gearbox management system

Functional diagram

Components

E313 Selector lever
E438 Tiptronic switch in steering wheel to shift up
E439 Tiptronic switch in steering wheel to shift down

F319 Selector lever locked in position P switch

G182 Gearbox input speed sender
G270 Gearbox hydraulic pressure sender
G487 Gear selector movement sensor 1
G488 Gear selector movement sensor 2
G489 Gear selector movement sensor 3
G490 Gear selector movement sensor 4
G510 Temperature sender in control unit
G612 Gearbox input speed sender 2
G617 Clutch travel sender 1
G618 Clutch travel sender 2
G632 Gearbox input speed sender 1

J119 Multifunction display
J285 Control unit with display in dash panel insert
J453 Multifunction steering wheel control unit
J519 Onboard supply control unit
J527 Steering column electronics control unit
J533 Data bus diagnostic interface
J681 Terminal 15 voltage supply relay 2
J743 Mechatronic unit for direct shift gearbox

N110 Selector lever lock solenoid
N433 Valve 1 in gear train half 1
N434 Valve 2 in gear train half 1
N435 Valve 3 in gear train half 1
N436 Valve 4 in gear train half 1
N437 Valve 1 in gear train half 2
N438 Valve 2 in gear train half 2
N439 Valve 3 in gear train half 2
N440 Valve 4 in gear train half 2

V401 Motor for hydraulic pump

Y6 Selector lever position display

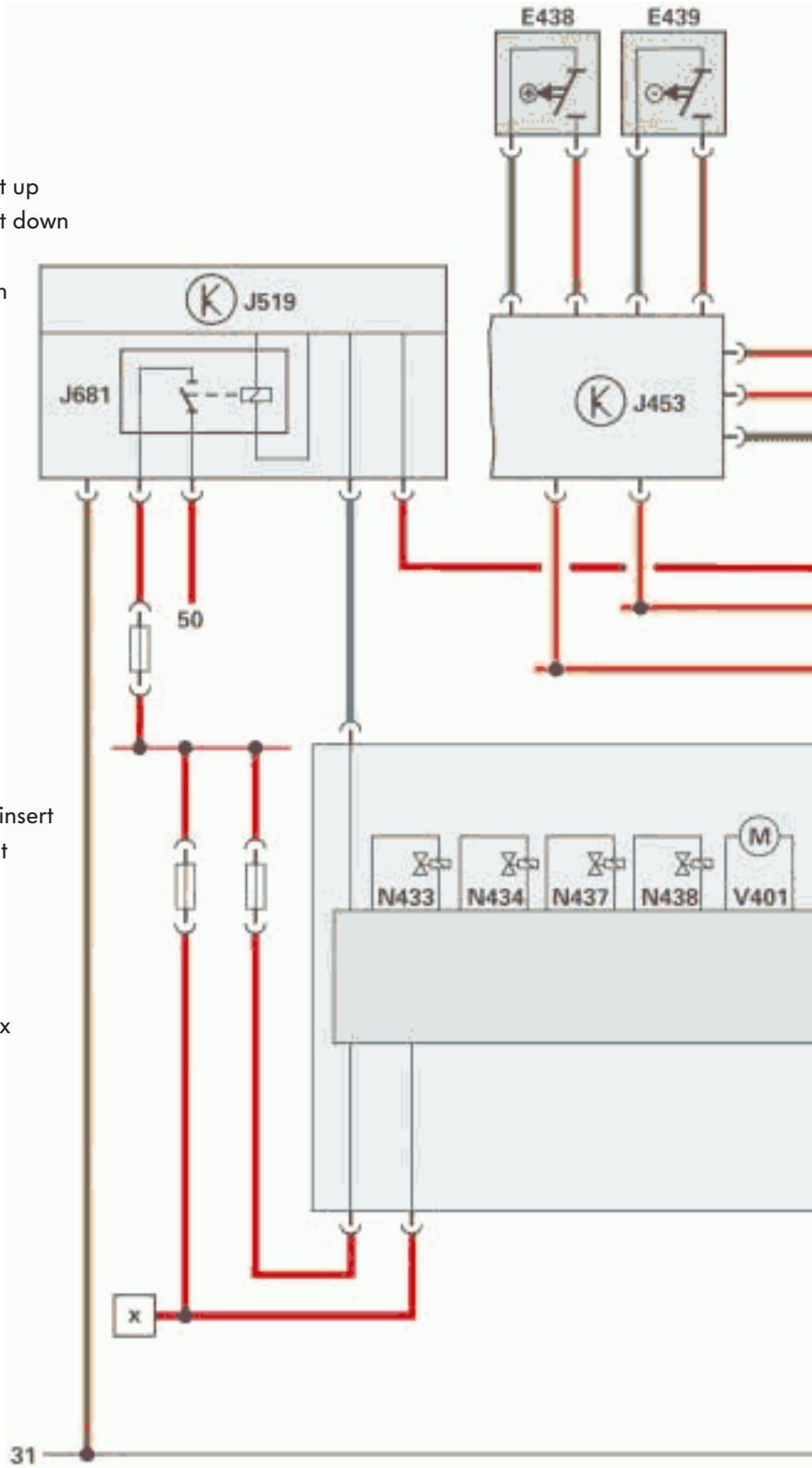

Diagnosis connector

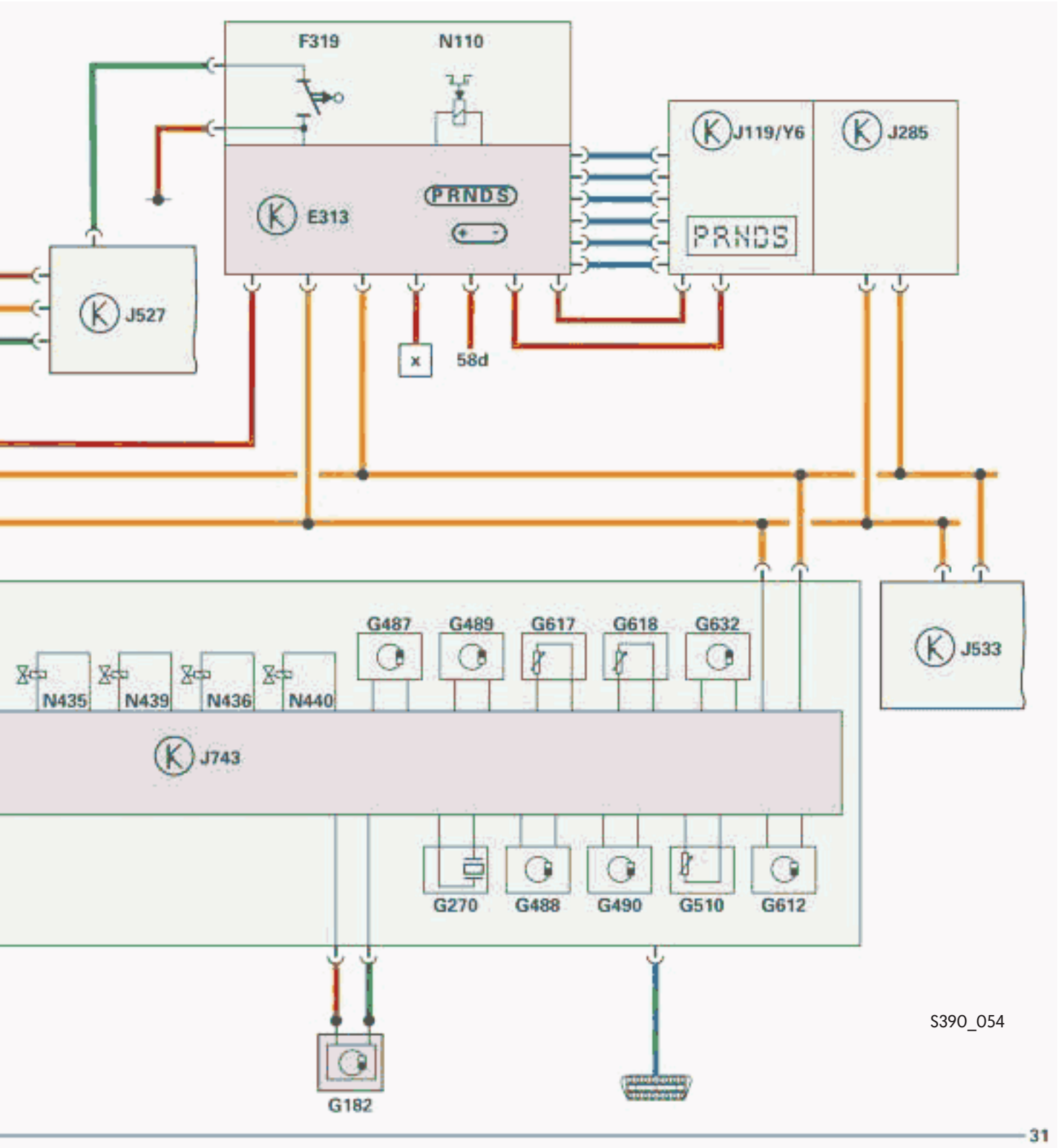

Input signal

Output signal

Bi-directional

Positive

Ground

CAN data bus

CAN data bus connection

The schematic shown below symbolically shows the integration of the mechatronic unit for direct shift gearbox into the vehicle's CAN data bus structure.

J104	Control unit for ABS with EDL
J248	Diesel direct injection system control unit
J285	Control unit with display in dash panel insert
J519	Onboard supply control unit
J527	Steering column electronics control unit
J533	Data bus diagnostic interface
J587	Selector lever sensor control unit
J623	Engine control unit
J743	Mechatronic unit for direct shift gearbox

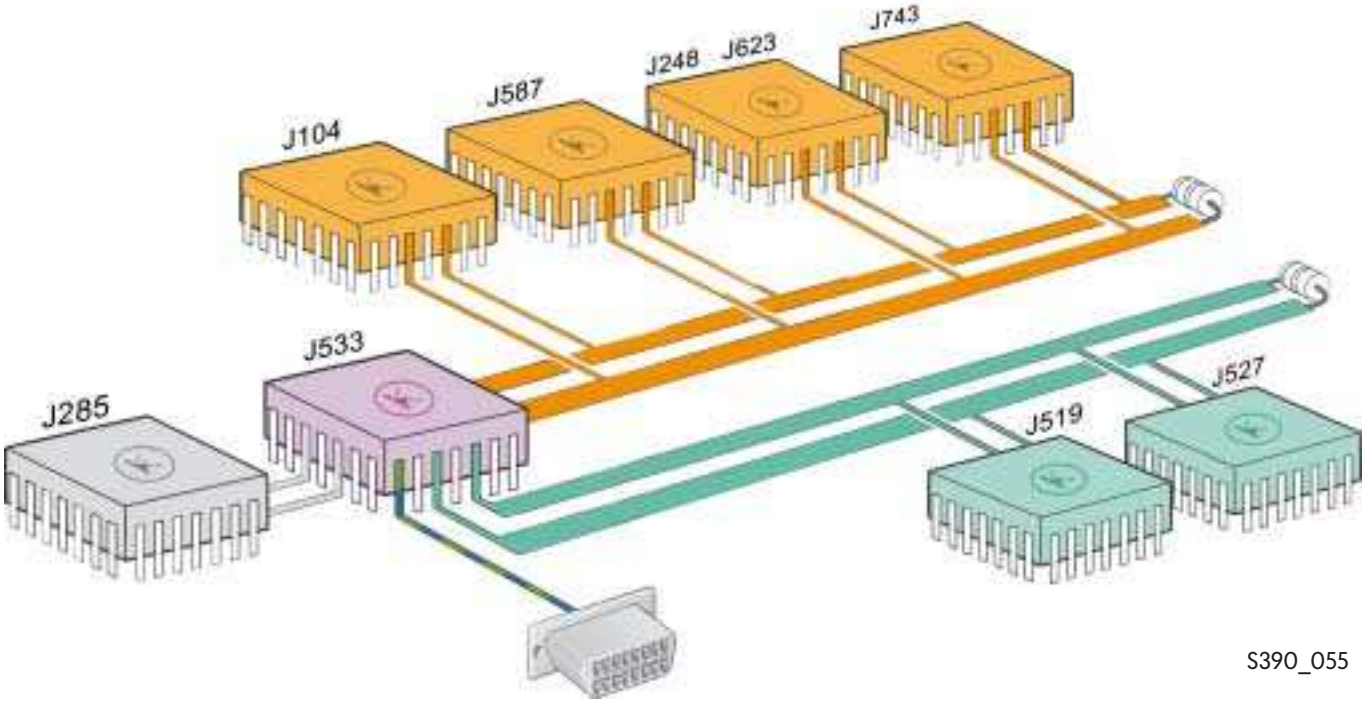

"Powertrain" CAN data bus

CAN "convenience" data bus

Diagnosis

Via the vehicle diagnosis, testing and information system VAS 5051 A/B and VAS 5052, the following operating modes:

- Guided Fault Finding and
- Guided Functions

are available.

"Guided Fault Finding" operating mode

A test plan, which can be used to test the following sensors, actuators and the mechatronic unit during operation is contained in "Guided Fault Finding" for the double-clutch gearbox.
When testing the sensors and actuators, please observe the instructions in VAS 5051 A/B and VAS 5052.

Sensors:

E438 Tiptronic switch in steering wheel to shift up
E439 Tiptronic switch in steering wheel to shift down
G182 Gearbox input speed sender
G270 Gearbox hydraulic pressure sender
G487 Gear selector movement sensor 1
G488 Gear selector movement sensor 2
G489 Gear selector movement sensor 3
G490 Gear selector movement sensor 4
G510 Temperature sender in control unit
G612 Gearbox input speed sender 2
G617 Clutch travel sender 1
G618 Clutch travel sender 2
G632 Gearbox input speed sender 1
J587 Selector lever sensor control unit

Actuators:

N433 Valve 1 in gear train half 1
N434 Valve 2 in gear train half 1
N435 Valve 3 in gear train half 1
N436 Valve 4 in gear train half 1
N437 Valve 1 in gear train half 2
N438 Valve 2 in gear train half 2
N439 Valve 3 in gear train half 2
N440 Valve 4 in gear train half 2
V401 Motor for hydraulic pump

Mechatronic unit:

Mechatronic unit defective
J743 Mechatronic unit for direct shift gearbox

Special tools

A new special tool is available for aligning gearbox support 3282 of engine and gearbox jack V.A.G 1383 A when removing the gearbox.

Adjustment plate 3282/59

S390_095

Test Yourself

Which answers are correct?

One or several of the given answers may be correct.

1. Which statements about the double-clutch gearbox 0AM are correct?

☐ a) The gearbox is equipped with a double clutch.

☐ b) The gearbox has 7 forwards gears and one reverse gear.

☐ c) The mechatronic unit and the mechanical gearbox each have a separate oil circuit.

☐ d) The oil pump is driven subject to requirements.

2. Onto which shaft does clutch K1 transmit the engine torque?

☐ a) Onto output shaft 2.

☐ b) Onto output shaft 1.

☐ c) Onto drive shaft 1.

☐ d) Onto drive shaft 2.

3. Please name the components!

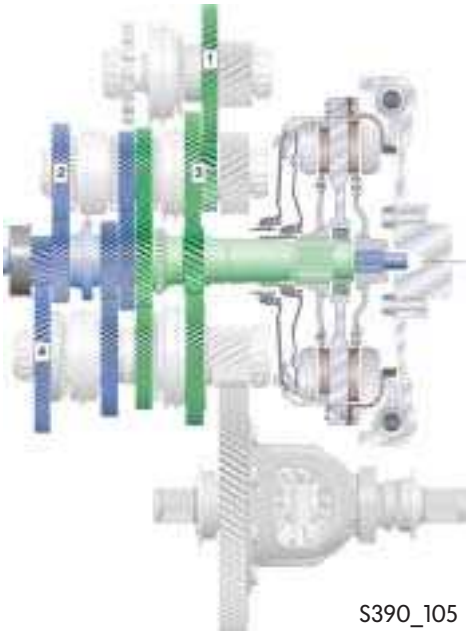

S390_105

1 .....

2 .....

3 .....

4 .....

4. Please complete the text!

..... independent, ... clutches operate in the double clutch. They each conduct the engine torque into ..... gear train half.
When the engine is switched off, ... clutches are ..... .
During vehicle operation, only ..... of the clutches is ever ..... .

5. Which gear is engaged in the illustration?

☐ a) 1st gear.

☐ b) 4th gear.

☐ c) R gear.

☐ d) 7th gear.

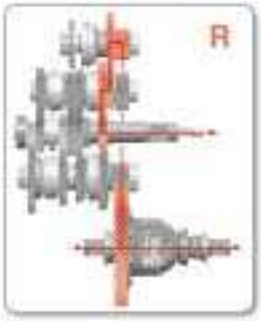

S390_034

6. Which statement about the mechatronic unit is correct?

☐ a) The mechatronic unit is the central gearbox control unit.

☐ b) It consists of one module, in which the electronic control unit and the electrohydraulic control unit are comprised.

☐ c) The mechatronic unit has a separate oil circuit.

☐ d) It is connected to the oil circuit of the mechanical gearbox.

7. Please complete the text!

The electrohydraulic control unit is integrated into the ..... .
It generates the ..... which is required to ..... and to actuate the ..... .

Test Yourself

8. Please name the components!

S390_106

1 .....

2 .....

3 .....

4 .....

9. Please name the components!

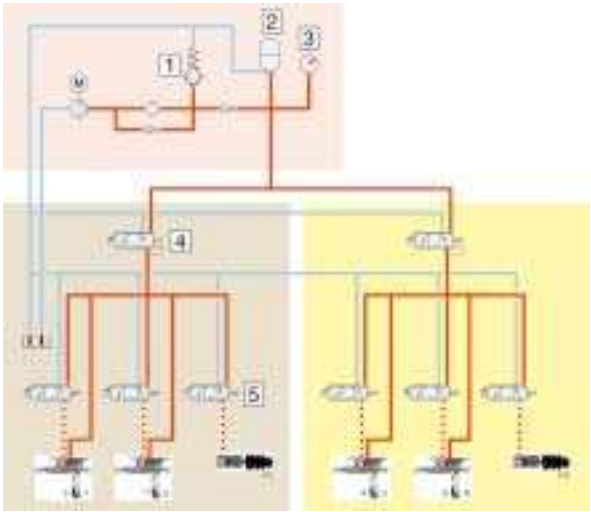

S390_104

1 .....

2 .....

3 .....

4 .....

5 .....

10. Via valve 2 in gear train half 1 N434,

☐ a) 1st and 3rd gears are shifted.

☐ b) 4th and 2nd gears are shifted.

☐ c) 7th and 5th gears are shifted.

11. Which statement is correct?

☐ a) The motor for the hydraulic pump is a brushless DC motor.

☐ b) The brushless DC motor is actuated by the engine control unit.

☐ c) It drives the hydraulic pump via a coupling.

12. Valve 4 in gear train half 2 N440

☐ a) Is a gear train half pressure control valve.

☐ b) It controls the oil pressure for gear train half 2.

☐ c) Gear train half 1 can be shut off via this valve.

13. Please complete the text!

The gearbox input speed sender G182 is inserted into the ..... .
It electronically scans the starter ring gear and therefore records the ..... .
The gearbox input speed signal is required by the control unit to ..... and .....
the clutches.
In the event of signal failure, the control unit uses the ..... signal as a substitute signal.

14. A clutch travel sender consists of

☐ a) An iron core, around which a primary coil is wrapped

☐ b) A Hall sender

☐ c) Two secondary coils

☐ d) A permanent magnet and

☐ e) The sensor electronics

Test Yourself

15. Which measures are introduced by the electronic gearbox control unit as of a mechatronic unit temperature of approx. 140°C?

☐ a) One gear train half is shut off.

☐ b) The system immediately shifts to the next highest gear.

☐ c) Engine torque reduction is introduced.

16. Which measures are introduced if a clutch actuator solenoid valve fails?

☐ a) The gear train half for the affected clutch is shut off.

☐ b) The affected clutch is no longer actuated.

☐ c) The clutch actuator solenoid valve for the other clutch also controls the affected clutch.

17. What are the effects if the motor for hydraulic pump fails?

☐ a) The hydraulic pressure drops.

☐ b) The clutches open independently.

☐ c) The failure of a motor for hydraulic pump has no effects, because the hydraulic pump continues to work.

Answers:

1. a, b, c, d; **2**. c;

3. 1 = reverse gear, 2 = 5th gear, 3 = reverse gear intermediate gear, 4 = 1st gear;

4. **two** independent **dry**clutches operate, ... **one** gear half train, ... **both** clutches **open**, ... only **one** of the clutches is ever **closed**;

5. c; **6**. a, b, c;

7. ... integrated into the **mechatronic module**, ... the **oil pressure**, which is required to **change the gears** ...,
... the **clutches**...

8. 1 = Gear selector for gears 5 and 7, 2 = Gearbox input speed sender 2 G612,
3 = Gear selector for gears 2 and 4, 4 = Gearbox input speed sender G182;

9. 1 = Pressure limiting valve, 2 = Pressure accumulator, 3 = Hydraulic pressure sender, 4 = Valve 4 in gear train half 1 N346, 5 = Valve 3 in gear train half 1 N435

10. c; **11**. a, c; **12**. a, b;

13. ... into the **gearbox housing**, ... the **gearbox input speed**, ... to **control** the clutches and calculate clutch **slip**, ... the **engine speed**;

14. a, b, d, e; **15**. c, **16**. a, b; **17**. a, b

390

© VOLKSWAGEN AG, Wolfsburg
All rights and rights to make technical alterations reserved.
000.2811.85.20 Technical status 12.2007

Volkswagen AG
Service Training VSQ-1
Brieffach 1995
D-38436 Wolfsburg

❀ This paper was manufactured from pulp bleached without the use of chlorine.