WARNING

Servicing a vehicle can be dangerous. If you have not received service-related training, the risks of injury, property damage, and failure of servicing increase. The recommended servicing procedures for the vehicle in this workshop manual were developed with Mazda-trained technicians in mind. This manual may be useful to non-Mazda trained technicians, but a technician with our service-related training and experience will be at less risk when performing service operations. However, all users of this manual are expected to at least know general safety procedures.

This manual contains "Warnings" and "Cautions" applicable to risks not normally encountered in a general technician's experience. They should be followed to reduce the risk of injury and the risk that improper service or repair may damage the vehicle or render it unsafe. It is also important to understand that the "Warnings" and "Cautions" are not exhaustive. It is impossible to warn of all the hazardous consequences that might result from failure to follow the procedures.

The procedures recommended and described in this manual are effective methods of performing service and repair. Some require tools specifically designed for a specific purpose. Persons using procedures and tools which are not recommended by Mazda Motor Corporation must satisfy themselves thoroughly that neither personal safety nor safety of the vehicle will be jeopardized.

The contents of this manual, including drawings and specifications, are the latest available at the time of printing, and Mazda Motor Corporation reserves the right to change the vehicle designs and alter the contents of this manual without notice and without incurring obligation.

Parts should be replaced with genuine Mazda replacement parts or with parts which match the quality of genuine Mazda replacement parts. Persons using replacement parts of lesser quality than that of genuine Mazda replacement parts must satisfy themselves thoroughly that neither personal safety nor safety of the vehicle will be jeopardized.

Mazda Motor Corporation is not responsible for any problems which may arise from the use of this manual. The cause of such problems includes but is not limited to insufficient service-related training, use of improper tools, use of replacement parts of lesser quality than that of genuine Mazda replacement parts, or not being aware of any revision of this manual.

cardiagn.com

Manual Transaxle Workshop Manual C66M-R

FOREWORD

This manual explains the service points for the above-indicated automotive system. This manual covers all models with the above-indicated automotive system, not any one specific model.

In order to do these procedures safely, quickly, and correctly, you must first read this manual and any other relevant service materials carefully.

All the contents of this manual, including drawings and specifications, are the latest available at the time of printing.
As modifications affecting repair or maintenance occur, relevant information supplementary to this volume will be made available at Mazda dealers. This manual should be kept up-to-date.

Mazda Motor Corporation reserves the right to alter the specifications and contents of this manual without obligation or advance notice.

All rights reserved. No part of this book may be reproduced or used in any form or by any means, electronic or mechanical—including photocopying and recording and the use of any kind of information storage and retrieval system—without permission in writing.

Mazda Motor Corporation
HIROSHIMA, JAPAN

CONTENTS

Title	Section
GENERAL INFORMATION	00
TRANSMISSION/TRANSAXLE	05

© 2012 Mazda Motor Corporation
PRINTED IN U.S.A., JANUARY 2012
Form No. 1A09–1U–12A
Part No. 9999–95–C66M–12

cardiagn.com

cardiagn.com

GENERAL INFORMATION

00
SECTION

GENERAL INFORMATION 00-00

00-00 GENERAL INFORMATION

HOW TO USE THIS MANUAL 00-00–2
Range of Topics 00-00–2
Service Procedure 00-00–2
Symbols 00-00–4
Advisory Messages 00-00–4
UNITS 00-00–5
Conversion From SI Units (Système International d'Unités) 00-00–5
Number Of Digits For Converted Values 00-00–5
Converted Value Rounding Off And Rounding Up/down 00-00–5
ABBREVIATIONS 00-00–5
FUNDAMENTAL PROCEDURES 00-00–6
Preparation of Tools and Measuring Equipment 00-00–6
Special Service Tools 00-00–6
Disassembly 00-00–6
Inspection During Removal, Disassembly 00-00–6
Arrangement of Parts 00-00–7
Cleaning of Parts 00-00–7
Reassembly 00-00–7
Adjustment 00-00–8
Rubber Parts and Tubing 00-00–8
Torque Formulas 00-00–8
Vise 00-00–8

cardiagn.com

HOW TO USE THIS MANUAL

id000000000100

Range of Topics

- This manual contains procedures for performing all required service operations. The procedures are divided into the following basic operations:
  - — Removal/Installation
  - — Disassembly/Assembly
  - — Replacement
  - — Inspection
  - — Adjustment
- Simple operations which can be performed easily just by looking at the actual unit (i.e., removal/installation of parts, cleaning of parts, and visual inspection) have been omitted.

Service Procedure

Inspection, adjustment

- Inspection and adjustment procedures are divided into steps. Important points regarding the location and contents of the procedures are explained in detail and shown in the illustrations.

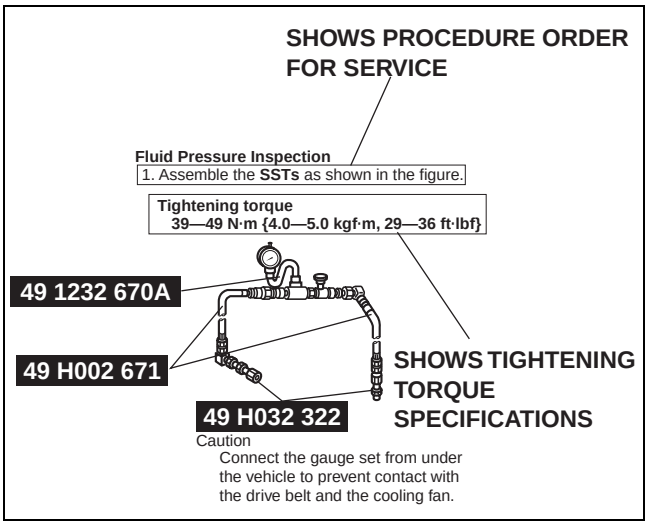

bpe2ue00000101

cardiagn.com

Repair procedure

1. Most repair operations begin with an overview illustration. It identifies the components, shows how the parts fit together, and describes visual part inspection. However, only removal/installation procedures that need to be performed methodically have written instructions.
2. Expendable parts, tightening torques, and symbols for oil, grease, and sealant are shown in the overview illustration. In addition, symbols indicating parts requiring the use of special service tools or equivalent are also shown.
3. Procedure steps are numbered and the part that is the main point of that procedure is shown in the illustration with the corresponding number. Occasionally, there are important points or additional information concerning a procedure. Refer to this information when servicing the related part.

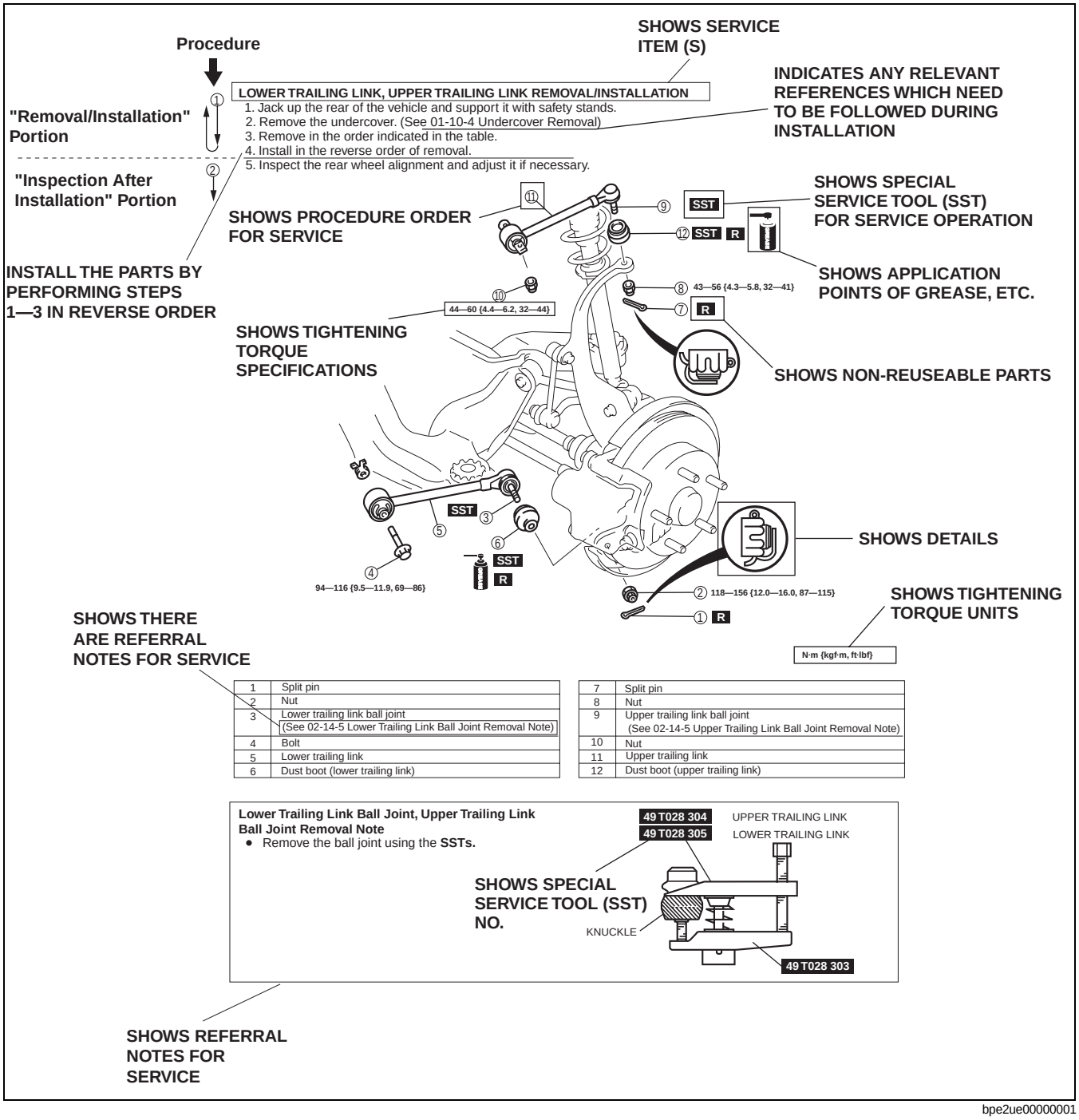

1	Split pin
2	Nut
3	Lower trailing link ball joint (See 02-14-5 Lower Trailing Link Ball Joint Removal Note)
4	Bolt
5	Lower trailing link
6	Dust boot (lower trailing link)

7	Split pin
8	Nut
9	Upper trailing link ball joint (See 02-14-5 Upper Trailing Link Ball Joint Removal Note)
10	Nut
11	Upper trailing link
12	Dust boot (upper trailing link)

bpe2ue00000001

cardiagn.com

Symbols

- There are eight symbols indicating oil, grease, fluids, sealant, and the use of **SST** or equivalent. These symbols show application points or use of these materials during service.

Symbol	Meaning	Kind
OIL	Apply oil	New appropriate engine oil or gear oil
BRAKE FLUID	Apply brake fluid	New appropriate brake fluid
ATF	Apply automatic transaxle/ transmission fluid	New appropriate automatic transaxle/ transmission fluid
GREASE	Apply grease	Appropriate grease
SEALANT	Apply sealant	Appropriate sealant
P	Apply petroleum jelly	Appropriate petroleum jelly
R	Replace part	O-ring, gasket, etc.
SST	Use SST or equivalent	Appropriate tools

Advisory Messages

- You will find several **Warnings**, **Cautions**, **Notes**, **Specifications** and **Upper and Lower Limits** in this manual.

Warning

- A Warning indicates a situation in which serious injury or death could result if the warning is ignored.

Caution

- A Caution indicates a situation in which damage to the vehicle or parts could result if the caution is ignored.

Note

- A Note provides added information that will help you to complete a particular procedure.

Specification

- The values indicate the allowable range when performing inspections or adjustments.

Upper and lower limits

- The values indicate the upper and lower limits that must not be exceeded when performing inspections or adjustments.

cardiagn.com

UNITS

id000000100400

Electric current	A (ampere)
Electric power	W (watt)
Electric resistance	ohm
Electric voltage	V (volt)
Length	mm (millimeter)
	in (inch)
Negative pressure	kPa (kilo pascal)
	mmHg (millimeters of mercury)
	inHg (inches of mercury)
Positive pressure	kPa (kilo pascal)
	kgf/cm^2 (kilogram force per square centimeter)
	psi (pounds per square inch)
Number of revolutions	rpm (revolutions per minute)
Torque	N·m (Newton meter)
	kgf·m (kilogram force meter)
	kgf·cm (kilogram force centimeter)
	ft·lbf (foot pound force)
	in·lbf (inch pound force)
Volume	L (liter)
	US qt (U.S. quart)
	Imp qt (Imperial quart)
	ml (milliliter)
	cc (cubic centimeter)
	cu in (cubic inch)
	fl oz (fluid ounce)
Weight	g (gram)
	oz (ounce)

Conversion From SI Units (Système International d'Unités)

- All numerical values in this manual are based on SI units. Numbers shown in conventional units are converted from these values.

Number Of Digits For Converted Values

- The number digits for converted values is the same as the number of significant figures*1 of the SI unit.
- For the torque value, the number of significant figures is, in principle, is 2 digits, in consideration of market practicalities. However, if the number of decimal places at the upper and lower limits of the converted value differs, the one with least number of decimal places is used. In addition, if the integer part is 3 digits or more, the integer part becomes the significant number of figures.

*1 : The number of significant figures is the number of digits from the left-most non-zero digit to the right-most digit including 0. (Example: 0.12 is 2 digits, 41.0 is 3 digits)

Converted Value Rounding Off And Rounding Up/down

- If there is no tolerance in the SI unit value, after conversion, rounding off is to within the number of significant digits.
- If there is tolerance in the SI unit value and the figure after conversion indicates the upper limit, the number of digits is rounded down to within the number of significant figures. If it indicates the lower limit, they are rounded up to within the number of significant figures.
- Even if the SI unit value is the same, the converted value may differ based on whether that value is the upper or lower limit.

ABBREVIATIONS

id000000010100

MTX	Manual Transaxle
SST	Special Service Tool

cardiagn.com

FUNDAMENTAL PROCEDURES

id000000750100

Preparation of Tools and Measuring Equipment

- Be sure that all necessary tools and measuring equipment are available before starting any work.

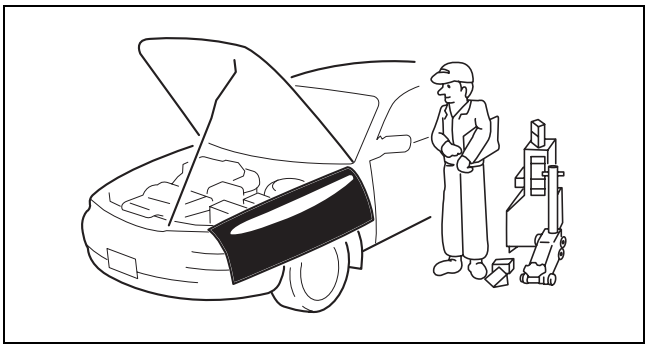

bpe2ue00000110

Special Service Tools

- Use special service tools or equivalent when they are required.

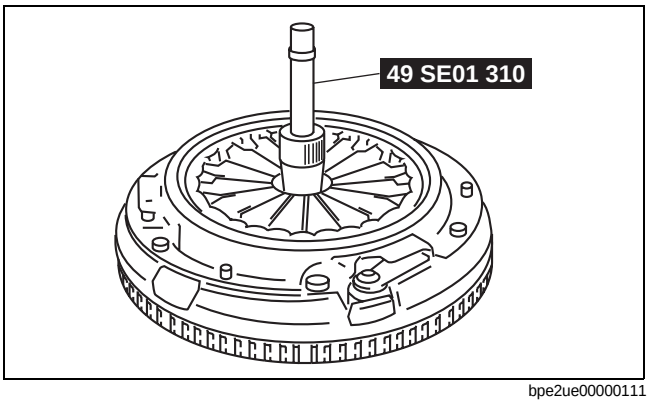

bpe2ue00000111

Disassembly

- If the disassembly procedure is complex, requiring many parts to be disassembled, all parts should be marked in a place that will not affect their performance or external appearance and identified so that reassembly can be performed easily and efficiently.

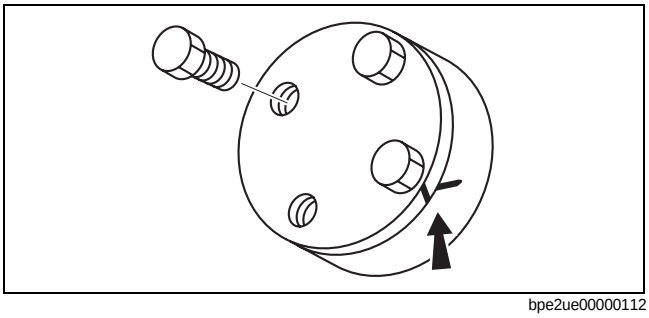

bpe2ue00000112

Inspection During Removal, Disassembly

- When removed, each part should be carefully inspected for malfunction, deformation, damage and other problems.

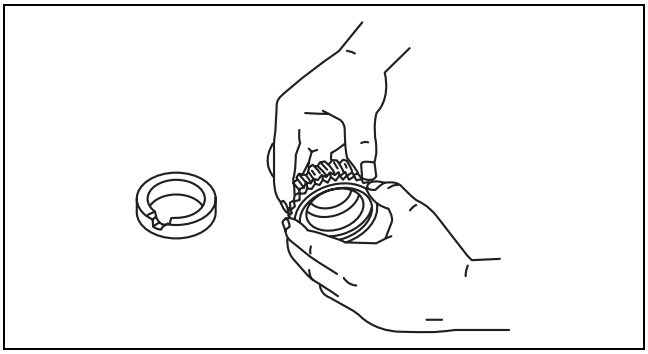

bpe2ue00000113

cardiagn.com

Arrangement of Parts

- All disassembled parts should be carefully arranged for reassembly.
- Be sure to separate or otherwise identify the parts to be replaced from those that will be reused.

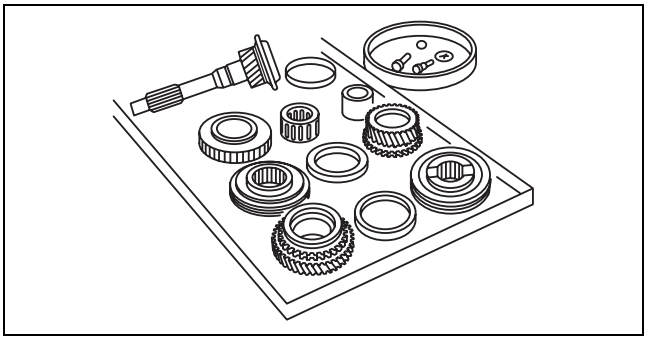

bpe2ue00000114

Cleaning of Parts

- All parts to be reused should be carefully and thoroughly cleaned in the appropriate method.

Warning

- **Using compressed air can cause dirt and other particles to fly out causing injury to the eyes. Wear protective eye wear whenever using compressed air.**

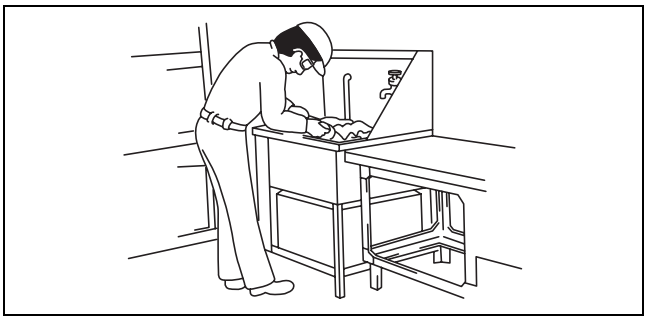

bpe2ue00000002

Reassembly

- Standard values, such as torques and certain adjustments, must be strictly observed in the reassembly of all parts.
- If removed, the following parts should be replaced with new ones:
  - — Oil seals
  - — Gaskets
  - — O-rings
  - — Lockwashers
  - — Cotter pins
  - — Nylon nuts

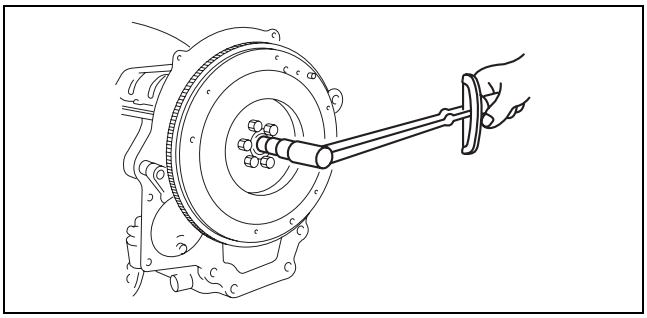

bpe2ue00000115

- Depending on location:
  - — Sealant and gaskets, or both, should be applied to specified locations. When sealant is applied, parts should be installed before sealant hardens to prevent leakage.
  - — Oil should be applied to the moving components of parts.
  - — Specified oil or grease should be applied at the prescribed locations (such as oil seals) before reassembly.

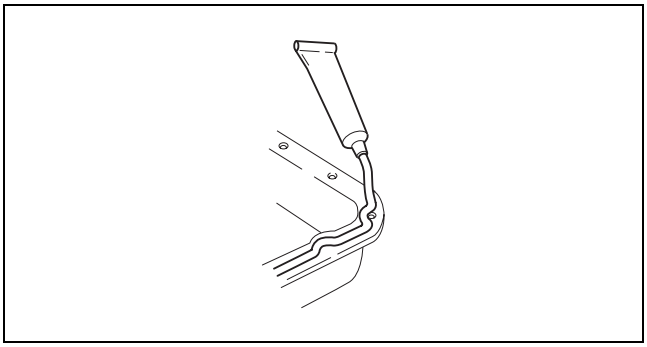

bpe2ue00000116

cardiagn.com

Adjustment

- Use suitable gauges and testers when making adjustments.

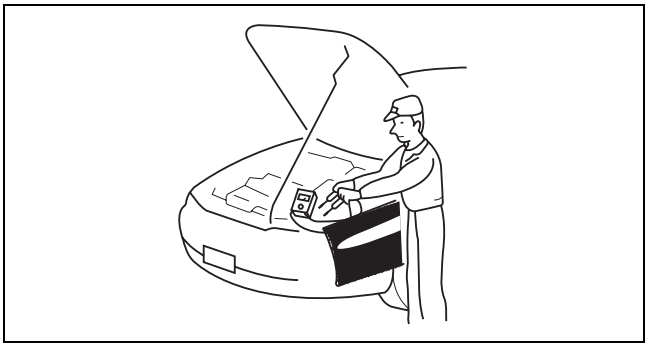

bpe2ue00000117

Rubber Parts and Tubing

- Prevent gasoline or oil from getting on rubber parts or tubing.

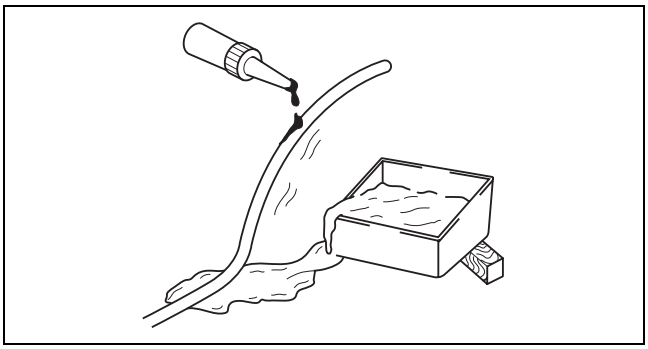

bpe2ue00000118

Torque Formulas

- When using a torque wrench-**SST** or equivalent combination, the written torque must be recalculated due to the extra length that the **SST** or equivalent adds to the torque wrench. Recalculate the torque by using the following formulas. Choose the formula that applies to you.

Torque Unit	Formula
N·m	N·m × [L/(L+A)]
kgf·m	kgf·m × [L/(L+A)]
kgf·cm	kgf·cm × [L/(L+A)]
ft·lbf	ft·lbf × [L/(L+A)]
in·lbf	in·lbf × [L/(L+A)]

A : The length of the **SST** past the torque wrench drive.
L : The length of the torque wrench.

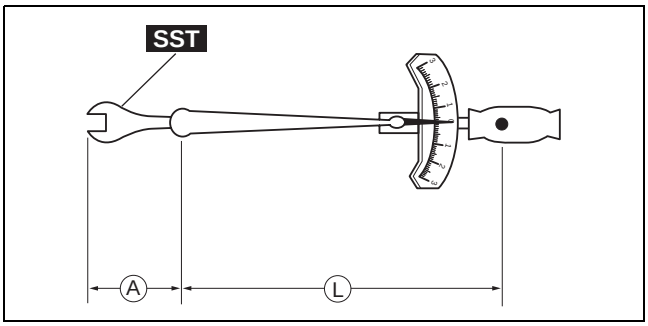

bpe2ue00000119

Vise

- When using a vise, put protective plates in the jaws of the vise to prevent damage to parts.

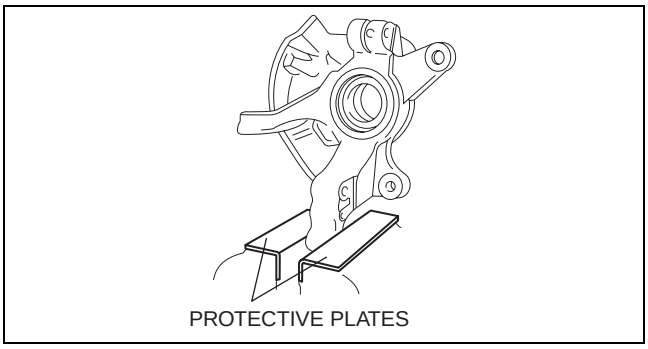

bpe2ue00000120

cardiagn.com

TRANSMISSION/TRANSAXLE

05
SECTION

MANUAL TRANSAXLE 05-15
TECHNICAL DATA 05-50
SERVICE TOOLS 05-60

05-15 MANUAL TRANSAXLE

PRECAUTION. 05-15–2
Service Caution. 05-15–2
TRANSAXLE DISASSEMBLY 05-15–3
Step 1 05-15–3
Step 2 05-15–5
TRANSAXLE CASE AND CLUTCH HOUSING DISASSEMBLY. 05-15–6
Oil Path Removal Note 05-15–7
Oil Seal Removal Note 05-15–7
Bearing Outer Race (Differential) Removal Note. 05-15–7
SHIFT CONTROL MODULE DISASSEMBLY. 05-15–8
Pin Removal Note 05-15–9
Clip Removal Note 05-15–10
SHIFT CONTROL MODULE ASSEMBLY 05-15–11
Oil Seal Assembly Note 05-15–12
Clip Assembly Note. 05-15–12
Pin Assembly Note 05-15–12
REVERSE IDLER GEAR COMPONENT DISASSEMBLY. 05-15–14
REVERSE IDLER GEAR COMPONENT INSPECTION 05-15–15
Reverse idler gear inspection 05-15–15
Synchronizer ring inspection. 05-15–15
Clutch hub component inspection. 05-15–15
REVERSE IDLER GEAR COMPONENT ASSEMBLY 05-15–16
Clutch Hub Sleeve Assembly Note 05-15–17
Shim Assembly Note. 05-15–17
PRIMARY SHAFT COMPONENT PREINSPECTION. 05-15–18
3rd Gear Thrust Clearance Inspection 05-15–18
4th Gear Thrust Clearance Inspection 05-15–18
5th Gear Thrust Clearance Inspection 05-15–18
6th Gear Thrust Clearance Inspection 05-15–19
PRIMARY SHAFT COMPONENT DISASSEMBLY 05-15–20
Ball Bearing (Transaxle Case Side) Removal Note 05-15–21
Clutch Hub (3GR/4GR) Removal Note 05-15–21
Clutch Hub (5GR/6GR) Removal Note. 05-15–21
Ball Bearing (Clutch Housing Side) Removal Note. 05-15–22
PRIMARY SHAFT COMPONENT INSPECTION. 05-15–22
Gear Inspection 05-15–22
Primary Shaft Inspection 05-15–22
Synchronizer Ring Inspection. 05-15–23
Clutch Hub Component Inspection. . . . 05-15–23
PRIMARY SHAFT COMPONENT ASSEMBLY 05-15–24
Ball Bearing (Clutch Housing Side) Assembly Note 05-15–25
Clutch Hub (5GR/6GR) Assembly Note 05-15–25
Clutch Hub Sleeve Assembly Note. . . . 05-15–25
Synchronizer Key Assembly Note 05-15–26
Synchronizer Ring Assembly Note. . . . 05-15–26
Clutch Hub (3GR/4GR) Assembly Note 05-15–27
Ball Bearing (Transaxle Case Side) Assembly Note 05-15–27
SECONDARY SHAFT COMPONENT PREINSPECTION 05-15–27
Secondary 1st Gear Thrust Clearance Inspection 05-15–27
Secondary 2nd Gear Thrust Clearance Inspection 05-15–27
SECONDARY SHAFT COMPONENT DISASSEMBLY 05-15–28
Tapered Roller Bearing (Transaxle Case Side), Secondary 4th Gear Removal Note 05-15–29
Secondary 3rd Gear, Secondary 6th Gear Removal Note 05-15–29
Secondary 5th Gear Removal Note . . . 05-15–29
Tapered Roller Bearing (Clutch Housing Side) Removal Note. 05-15–30
SECONDARY SHAFT COMPONENT INSPECTION. 05-15–30
Gear Inspection 05-15–30
Gear sleeve inspection. 05-15–30
Secondary Shaft Inspection 05-15–31
Synchronizer Ring Inspection. 05-15–31
Clutch Hub Component Inspection. . . . 05-15–32

cardiagn.com

SECONDARY SHAFT COMPONENT ASSEMBLY **05-15–32**
Middle Cone Ring Assembly Note **05-15–33**
Synchronizer Ring (Secondary 1st Gear) Assembly Note **05-15–34**
Clutch Hub Assembly Note **05-15–34**
Gear Sleeve Assembly Note **05-15–35**
Secondary Shaft Assembly Note **05-15–35**
Clutch Hub Sleeve Assembly Note **05-15–36**
Synchronizer Key Assembly Note **05-15–37**
Synchronizer Ring (Secondary 2nd Gear) Assembly Note **05-15–37**
Secondary 2nd Gear Assembly Note **05-15–37**
Friction Damper (Secondary 2nd Gear) Assembly Note **05-15–38**
Secondary 5th Gear Assembly Note. . . **05-15–38**
Secondary 6th Gear and Secondary 3rd Gear Assembly Note. **05-15–39**
Secondary 4th Gear Assembly Note. . . **05-15–39**
Tapered Roller Bearing Assembly Note **05-15–39**
DIFFERENTIAL BACKLASH ADJUSTMENT **05-15–40**
Thrust Washer Selection Calculation **05-15–42**
DIFFERENTIAL DISASSEMBLY. **05-15–43**
Tapered Roller Bearing Removal Note. **05-15–44**
Ring Gear Removal Note **05-15–44**
Pin Removal Note **05-15–45**
DIFFERENTIAL ASSEMBLY. **05-15–45**
Pin Assembly Note. **05-15–46**
Ring Gear Assembly Note **05-15–46**
Tapered Roller Bearing Installation Note **05-15–47**
BEARING PRELOAD ADJUSTMENT. . . **05-15–47**
Primary Shaft Preload Adjustment. . . . **05-15–47**
Secondary Shaft Preload Adjustment **05-15–51**
Differential Preload Adjustment **05-15–55**
TRANSAXLE CASE AND CLUTCH HOUSING ASSEMBLY **05-15–59**
Bearing Outer Race (Differential) Assembly Note. **05-15–59**
Oil Seal Assembly Note **05-15–60**
TRANSAXLE ASSEMBLY. **05-15–60**
Step 1. . . . . **05-15–60**
Step 2. . . . . **05-15–66**

PRECAUTION

id051500168000

Warning

- **Always wear protective eye wear when using compressed air. Otherwise, dirt particles blown off by compressed air could get into the eyes.**

Service Caution

Disassembly

1. Clean the outside of the transaxle using steam and/or degreaser before disassembly.
2. To prevent dust penetration into the transaxle, perform the disassembly in a dust free environment.
3. Clean the disassembled parts using degreaser and dry them using compressed air.
4. Clean the oil holes and oil grooves using compressed air and verify that they are not plugged.
5. Always wear protective eye wear when using compressed air.
6. When disassembling a connecting part of a light-alloy part for the transaxle case, use a plastic hammer.
7. Organize and store the disassembled parts to protect them from dirt.
8. If using a vise, always secure the component using an aluminum plate to prevent component damage.
9. Disassemble while verifying damage, cracks, deformation, scratches, and the assembly condition of each part.

Cleaning

1. Thoroughly wash the exterior of the transaxle using steam or degreaser before disassembly.
2. Clean the removed parts using degreaser and dry them using compressed air. Clean the oil holes and oil passages using compressed air.

Assembly

1. Before assembly, verify that each part is clean and dried.
2. Apply a sufficient amount of the specified oil (SAE 75W-80, API service GL-4) to moving parts and sliding surfaces when performing assembly.
3. For parts such as gaskets, springs, or pins which are designated for replacement with every disassembly, always use a new part.
4. Clean off remaining silicone sealant before applying new silicone sealant.
5. After applying silicone sealant, install the transaxle case before the applied silicone sealant starts to harden, and wait for 30 min or more before adding oil.
6. When using a vise, always secure the component using an aluminum plate to prevent component damage.

cardiagn.com

TRANSAXLE DISASSEMBLY

id051500168100

Step 1

1. Assemble the **SST (49 G019 0A0)** to the **SST (49 0107 680A)**.

   Bolt used
   Part No.: 9YA02 A220 or M12×1.75 length 40 mm {1.6 in}
   Tightening torque
   88—118 N·m {9.0—12 kgf·m, 65—87 ft·lbf}

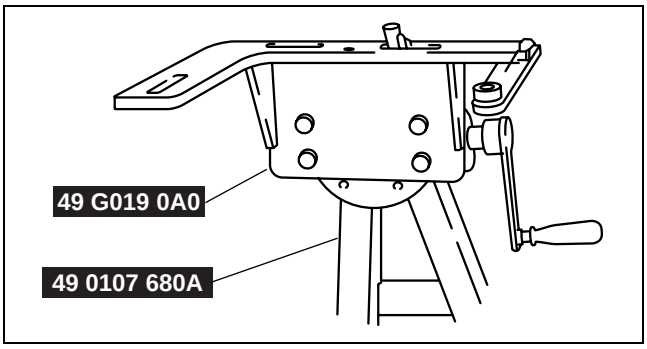

bc61um00000001

2. Assemble the MTX to the **SST**.

   Bolt A
   Part No.: 99450 1055 or M10×1.25 length 55 mm {2.2 in}, and nut (M10×1.25)
   Bolt A tightening torque
   38—52 N·m {3.9—5.3 kgf·m, 29—38 ft·lbf}
   Bolt B
   SST (49 G019 033 part of 49 G019 0A0)
   Bolt B tightening torque
   88—118 N·m {9.0—12 kgf·m, 65—87 ft·lbf}
   Bolt C
   Part No.: 9YA02 1080 or M10×1.5 length 55 mm {2.2 in}
   Bolt C tightening torque
   38—52 N·m {3.9—5.3 kgf·m, 29—38 ft·lbf}
   Bolt D
   Part No.: 99450 1030 or M10×1.25 length 30 mm {2.2 in}
   Bolt D tightening torque
   38—52 N·m {3.9—5.3 kgf·m, 29—38 ft·lbf}

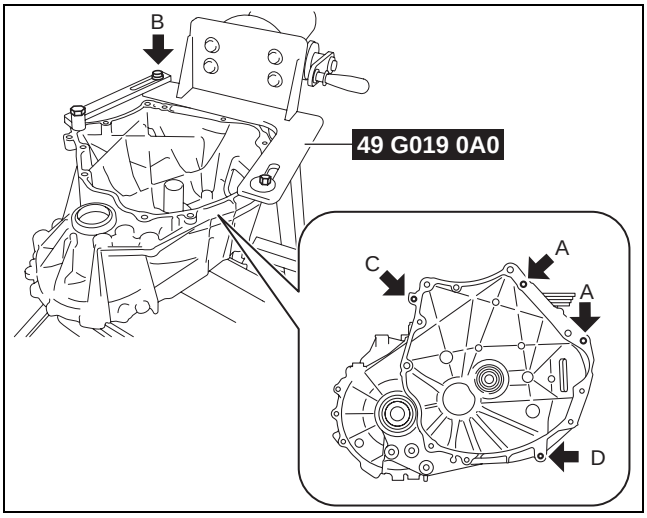

bc61um00000126

cardiagn.com

3. Remove the parts around the MTX using the procedure shown in the figure.

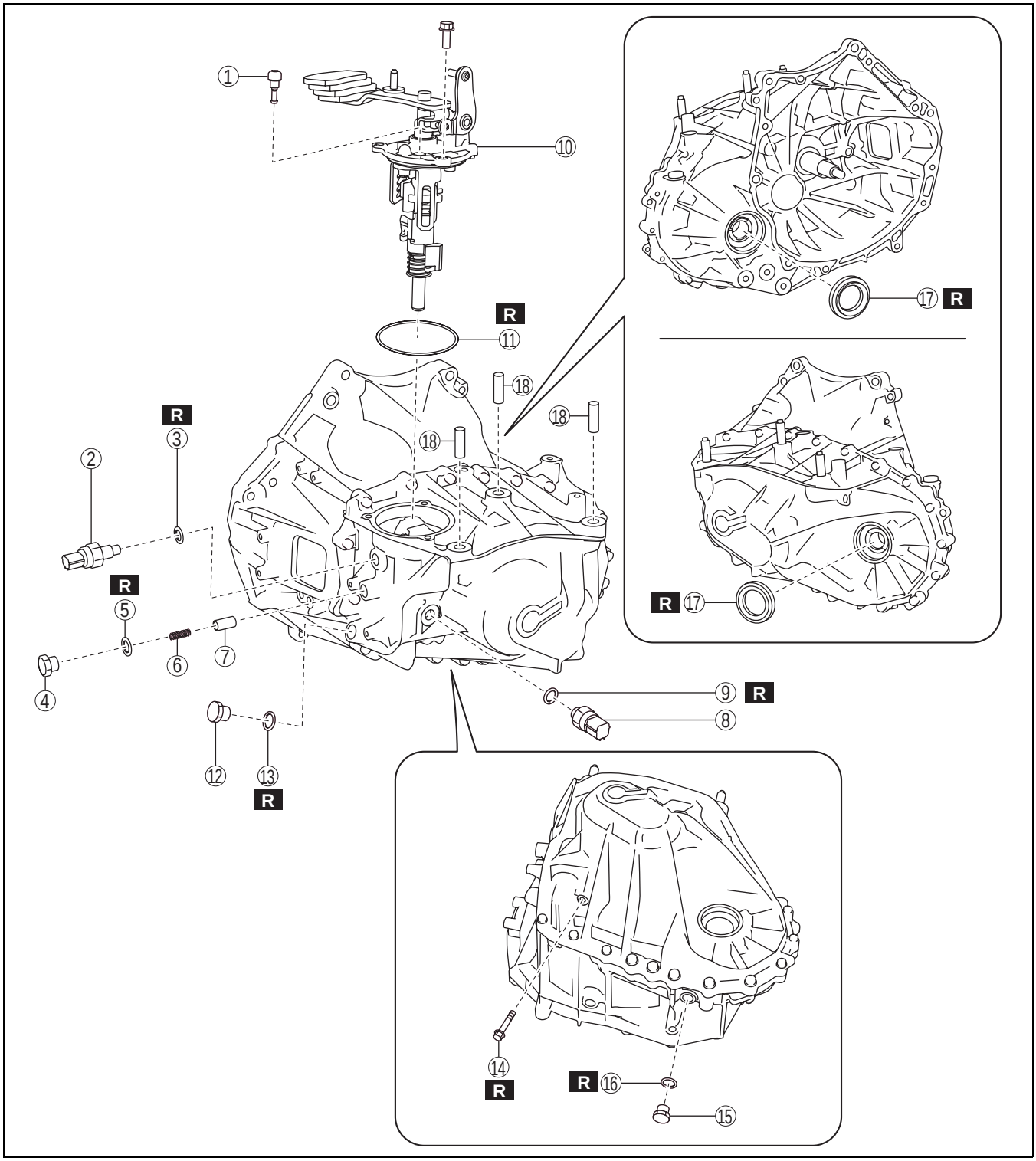

bc61um00000127

1	Breather
2	Neutral switch
3	Gasket
4	Plug
5	Gasket
6	Spring
7	Detent ball pin
8	Back-up light switch
9	Gasket

10	Shift control module
11	O-ring
12	Oil level plug
13	Gasket
14	Reverse gear shaft anchor bolt
15	Drain plug
16	Gasket
17	Oil seal
18	Stud bolt

cardiagn.com

Step 2

1. Disassemble the MTX in the order shown in the figure.

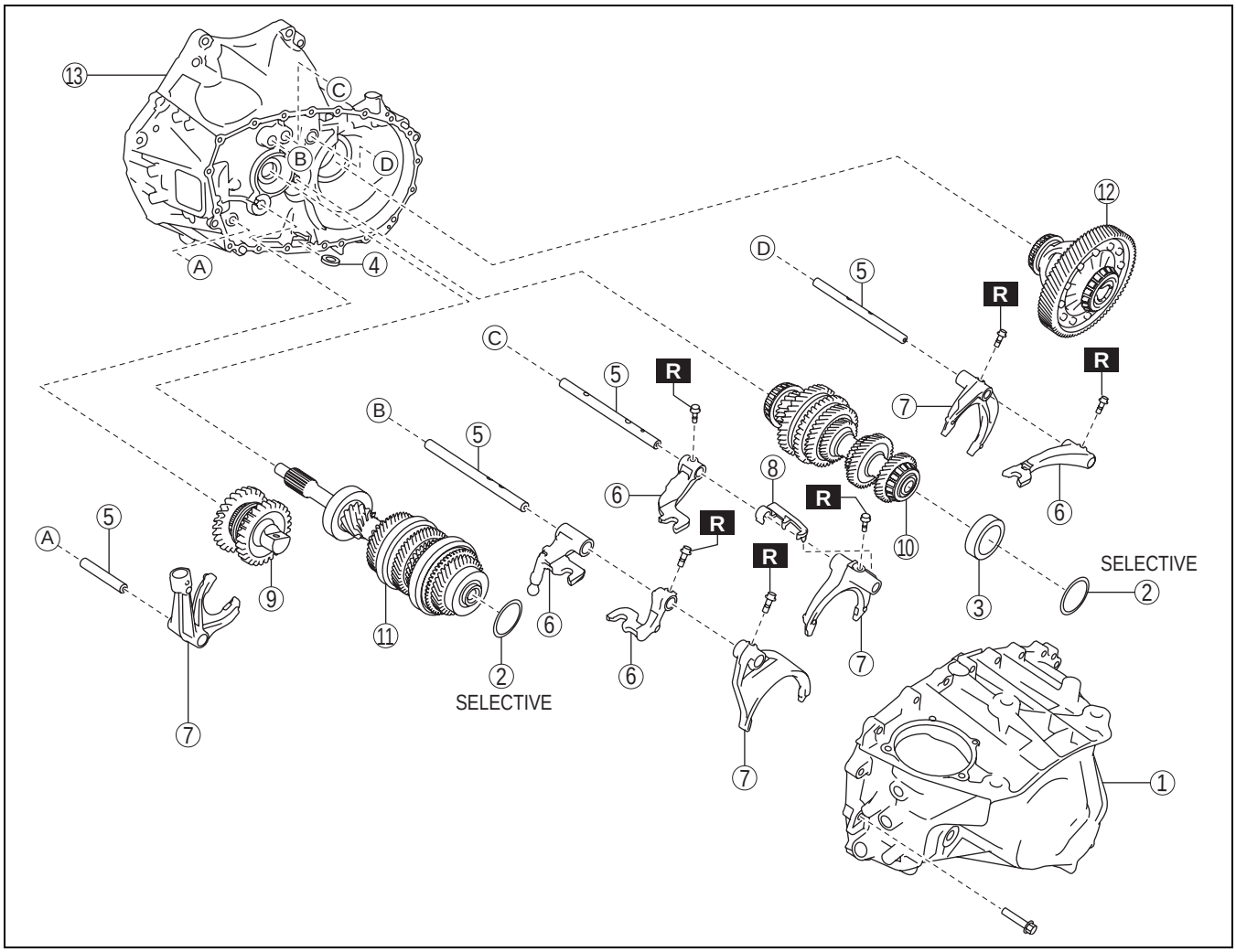

bc61um00000004

1	Transaxle case component (See 05-15-6 Transaxle case component removal note.)
2	Shim
3	Bearing outer race
4	Magnet
5	Shift rod
6	Shift rod end
7	Shift fork

8	Oil path
9	Reverse idler gear component
10	Primary shaft component (See 05-15-6 Primary shaft component, secondary shaft component removal note.)
11	Secondary shaft component (See 05-15-6 Primary shaft component, secondary shaft component removal note.)
12	Differential
13	Clutch housing component

2. Remove the silicone sealant of the transaxle case component and clutch housing component, and clean all the parts.

cardiagn.com

Transaxle case component removal note

1. Tap the locations shown in the figure using a plastic hammer to remove the transaxle case component.

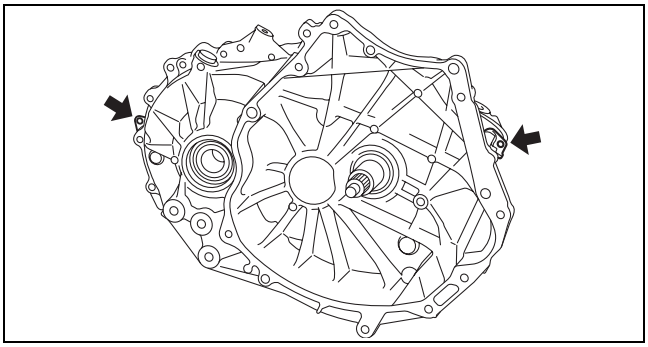

bc61um00000005

Primary shaft component, secondary shaft component removal note

1. Remove the primary shaft component and secondary shaft component as a single unit.

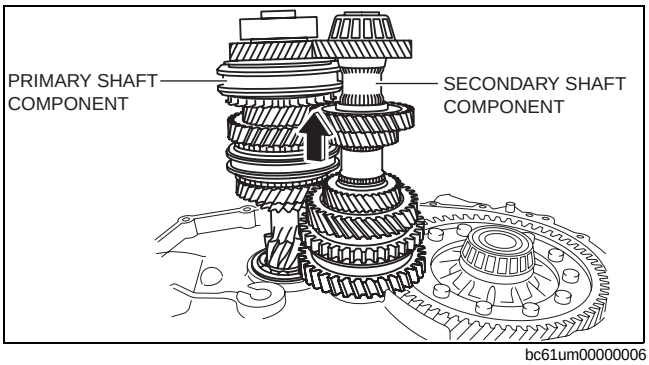

bc61um00000006

TRANSAXLE CASE AND CLUTCH HOUSING DISASSEMBLY

id051500168200

1. Disassemble the transaxle case component and clutch housing component in the order shown in the figure.

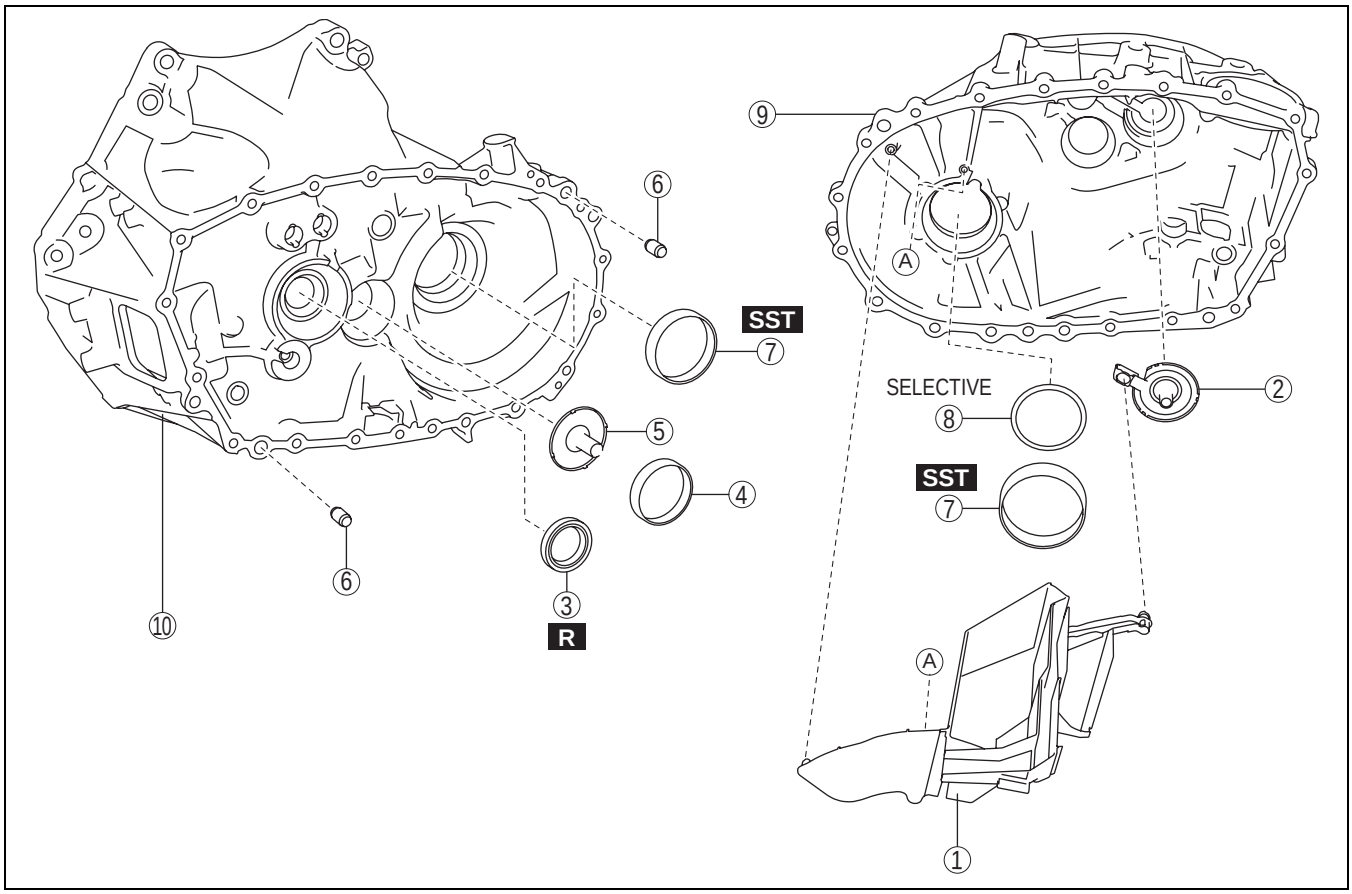

bc61um00000161

cardiagn.com

1	Oil path (See 05-15-7 Oil Path Removal Note.)
2	Funnel
3	Oil seal (See 05-15-7 Oil Seal Removal Note.)
4	Bearing outer race
5	Funnel
6	Dowel pin
7	Bearing outer race (differential) (See 05-15-7 Bearing Outer Race (Differential) Removal Note.)
8	Shim
9	Transaxle case
10	Clutch housing

Oil Path Removal Note

1. Remove the oil path.
2. As shown in the figure, verify that the oil path connection area is not broken.
   - If the oil path connection area is broken, replace the oil path.

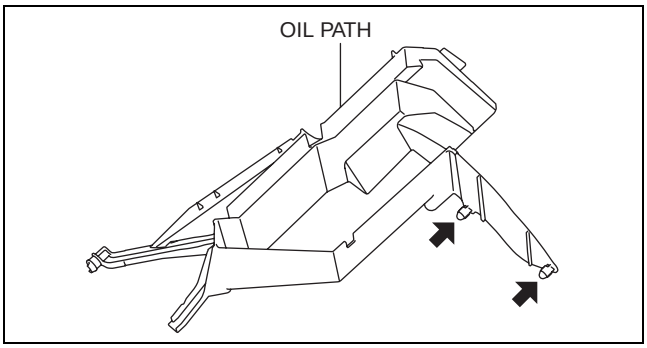

bc61um00000167

Oil Seal Removal Note

1. Remove the oil seal using a flathead screwdriver.

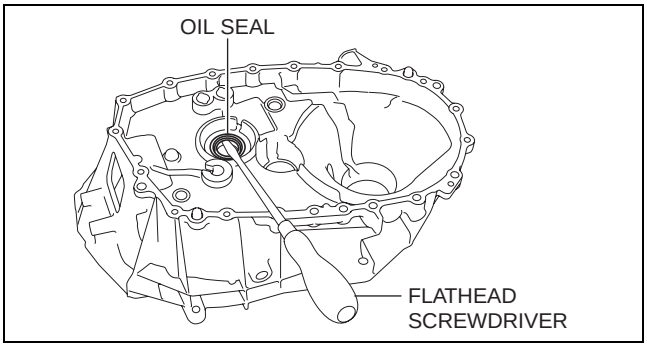

bc61um00000168

Bearing Outer Race (Differential) Removal Note

1. Remove the bearing outer race (differential) from the transaxle case using the **SST**.

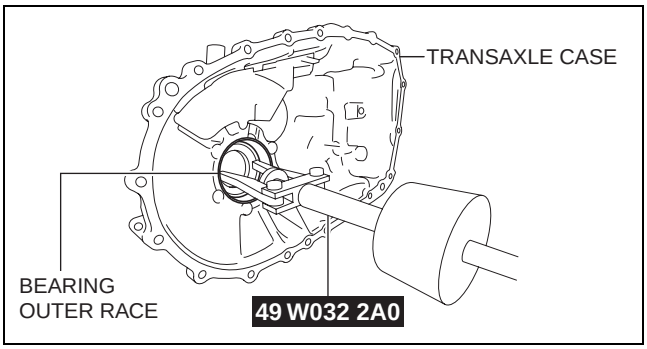

bc61um00000008

cardiagn.com

2. Remove the bearing outer race (differential) from the clutch housing using the **SST**.

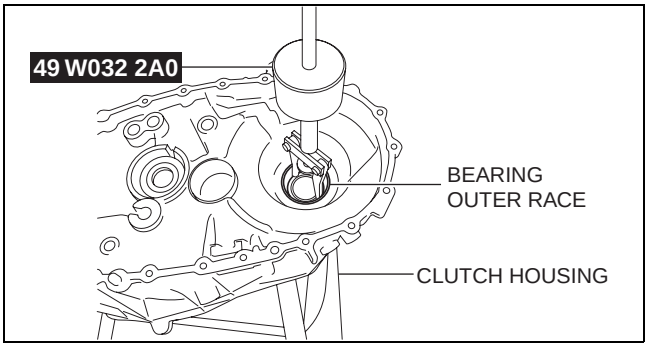

bc61um00000011

SHIFT CONTROL MODULE DISASSEMBLY

id051500170100

1. Disassemble the shift control module in the order shown in the figure.

bc61um00000102

cardiagn.com

1	Select lever
2	Pin (See 05-15-9 Pin Removal Note.)
3	Clip (See 05-15-10 Clip Removal Note.)
4	Spring seat
5	Spring
6	Washer
7	Switch pin
8	Shift lever
9	Interlock sleeve
10	Control lever component
11	Holder plate
12	Guide plate
13	Oil seal
14	Control case

Pin Removal Note

1. Secure the shift control module in a vise.

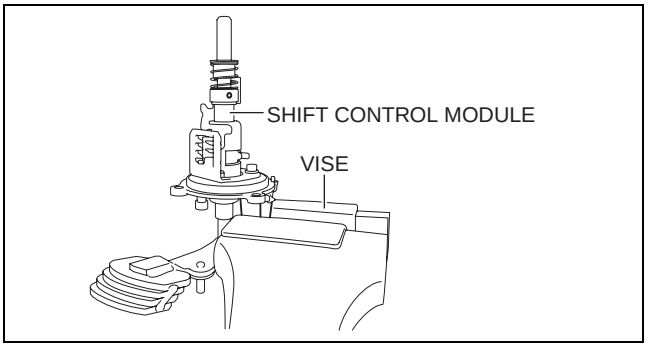

bc61um00000103

2. Mark the switch pin and interlock sleeve.

   Note
   - The switch pin has a particular installation direction.

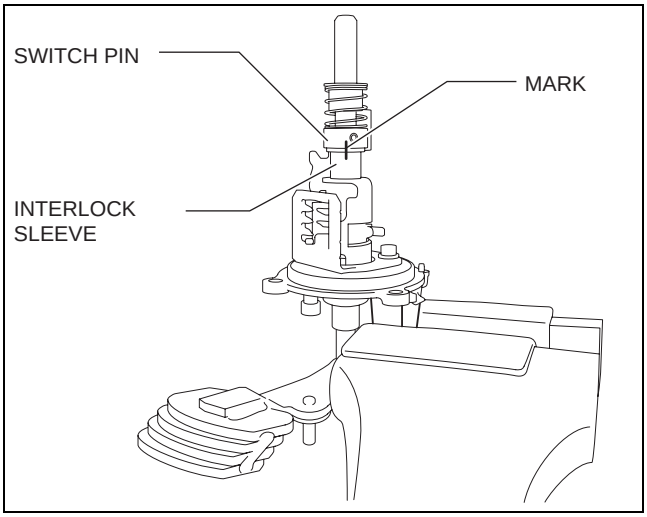

bc61um00000125

3. Remove the pin (switch pin) using a punch.

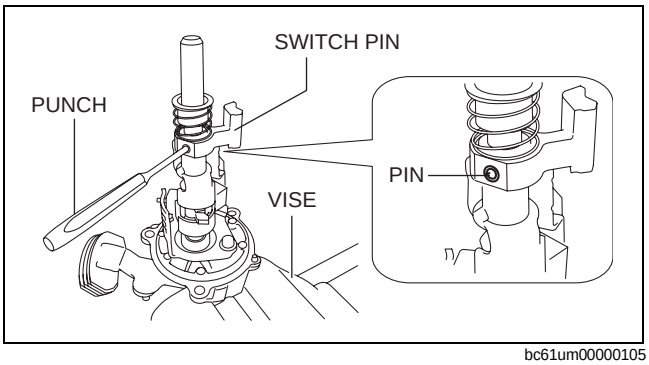

bc61um00000105

cardiagn.com

4. Move the shift lever to set the guide pin to the 5GR position of the guide plate.

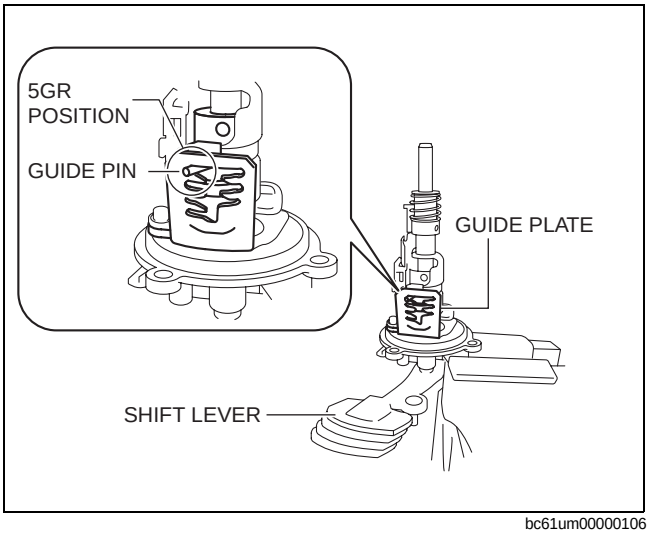

bc61um00000106

5. Remove the pin (control lever component) using a punch.

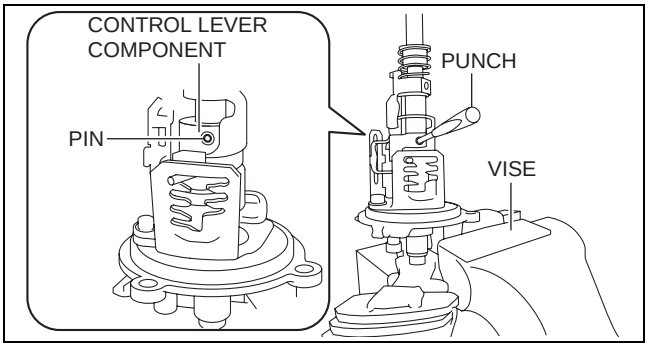

bc61um00000107

Clip Removal Note

1. Move the guide pin to the position shown in the figure for the guide plate.
2. Push down the spring seat by hand.
3. Detach the clip.

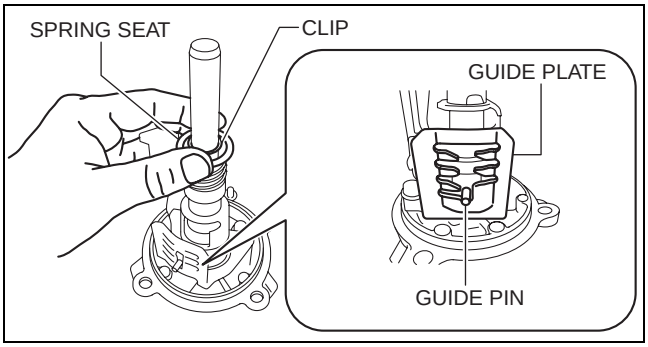

bc61um00000108

cardiagn.com

SHIFT CONTROL MODULE ASSEMBLY

id051500170200

1. Assemble the shift control module using the procedure shown in the figure.

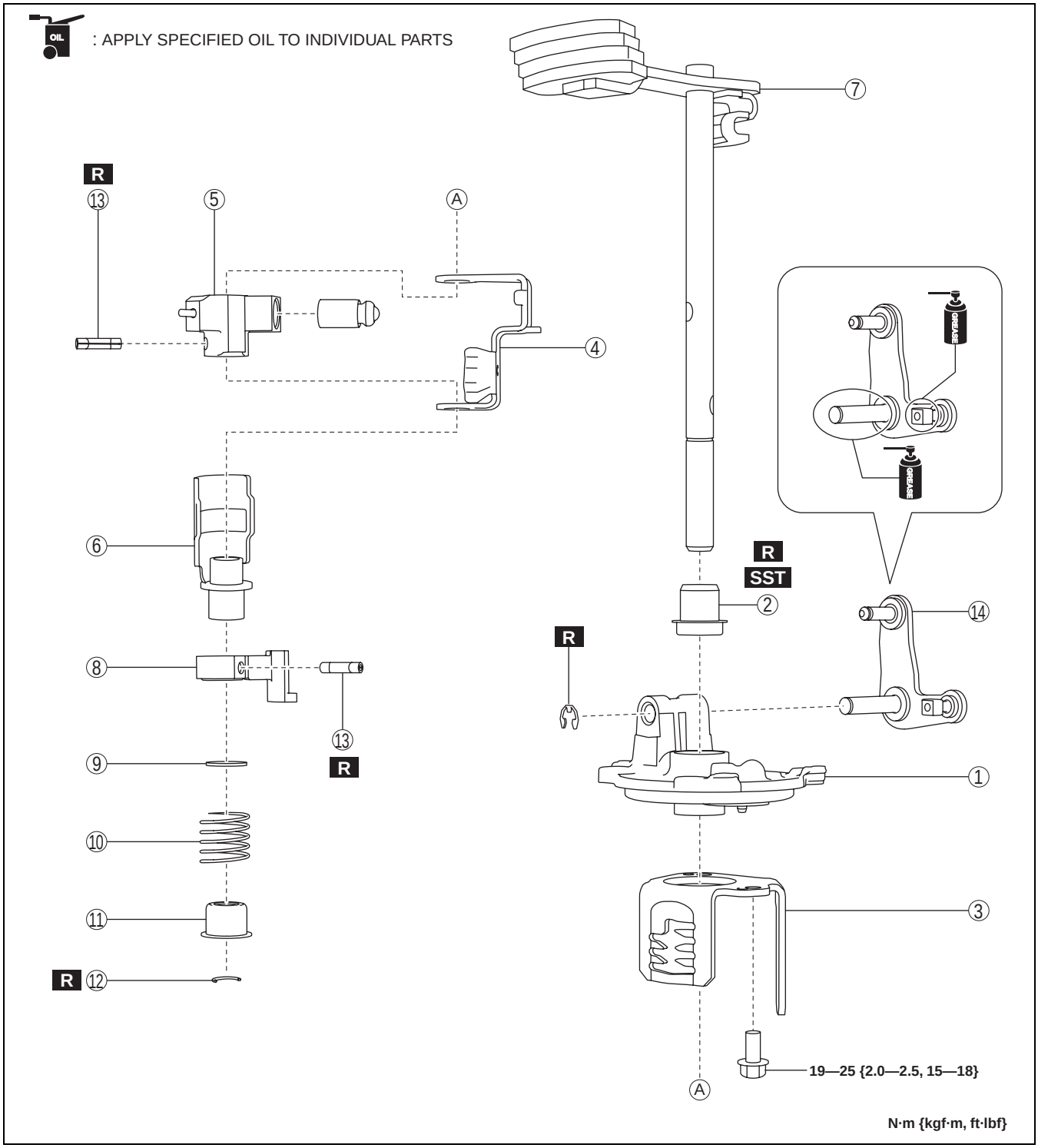

bc61um00000109

1	Control case
2	Oil seal (See 05-15-12 Oil Seal Assembly Note.)
3	Guide plate
4	Holder plate
5	Control lever component
6	Interlock sleeve
7	Shift lever

8	Switch pin
9	Washer
10	Spring
11	Spring seat
12	Clip (See 05-15-12 Clip Assembly Note.)
13	Pin (See 05-15-12 Pin Assembly Note.)

cardiagn.com

14	Selector lever

Oil Seal Assembly Note

1. Assemble a new oil seal to the control case using the **SST**.

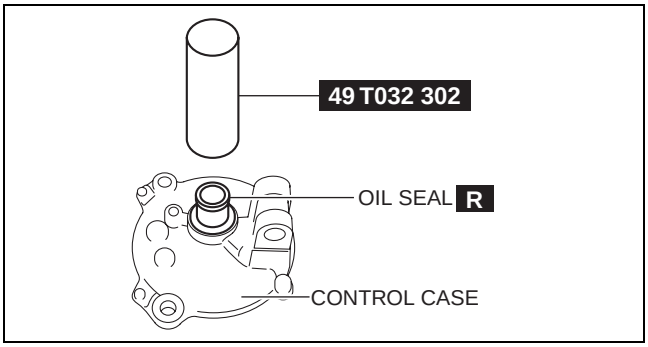

bc61um00000110

Clip Assembly Note

1. Move the guide pin to the position shown in the figure for the guide plate.
2. Push down the spring seat by hand.
3. Assemble the clip.

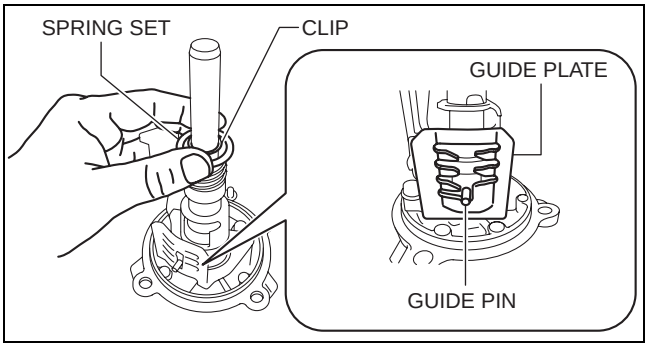

bc61um00000111

Pin Assembly Note

1. Secure the shift control module in a vise.

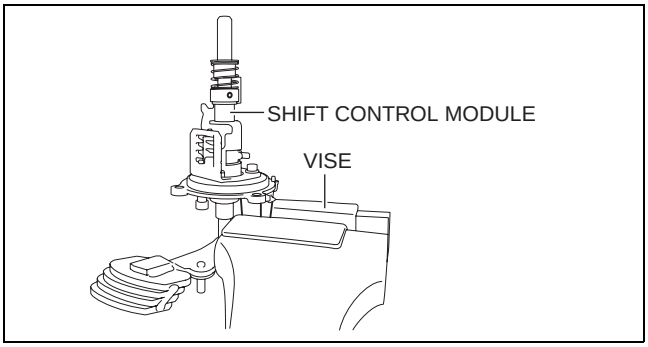

bc61um00000112

cardiagn.com

2. Align the switch pin and interlock sleeve markings.

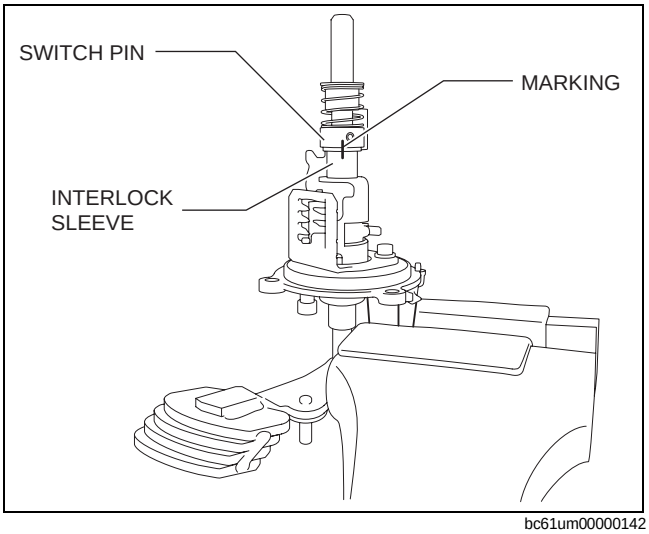

bc61um00000142

3. Assemble a new pin (switch pin) using a punch.

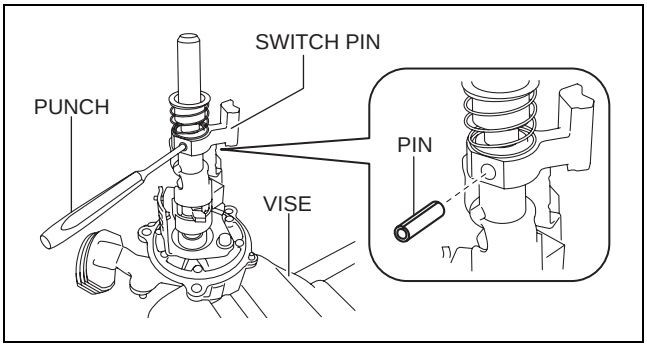

bc61um00000143

4. Move the control lever component to set the guide pin to the 5GR position of the guide plate.

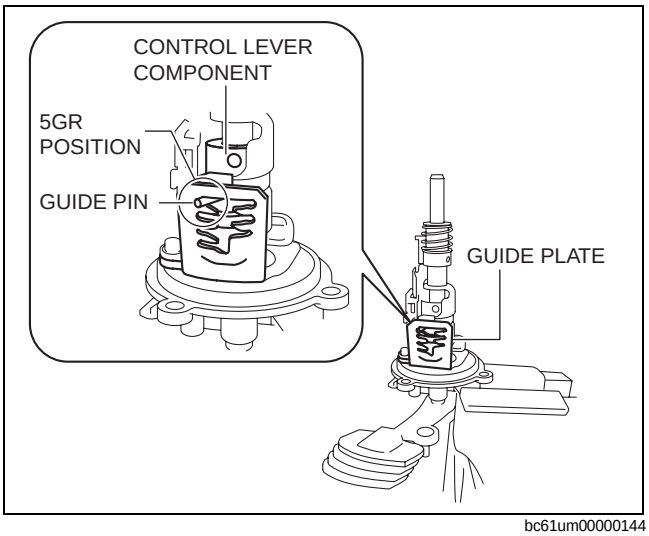

bc61um00000144

5. Assemble a new pin (control lever component) using a punch.

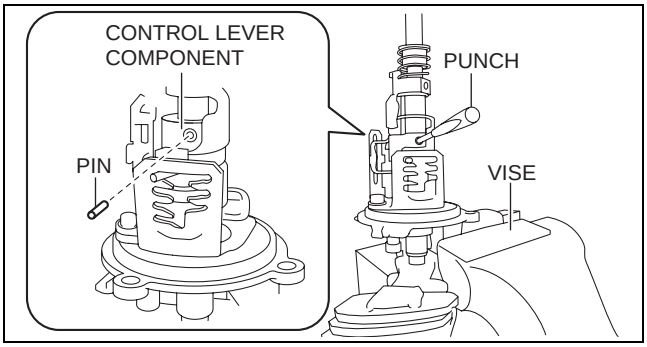

bc61um00000145

cardiagn.com

REVERSE IDLER GEAR COMPONENT DISASSEMBLY

id051500168300

1. Disassemble the reverse idler gear component in the order shown in the figure.

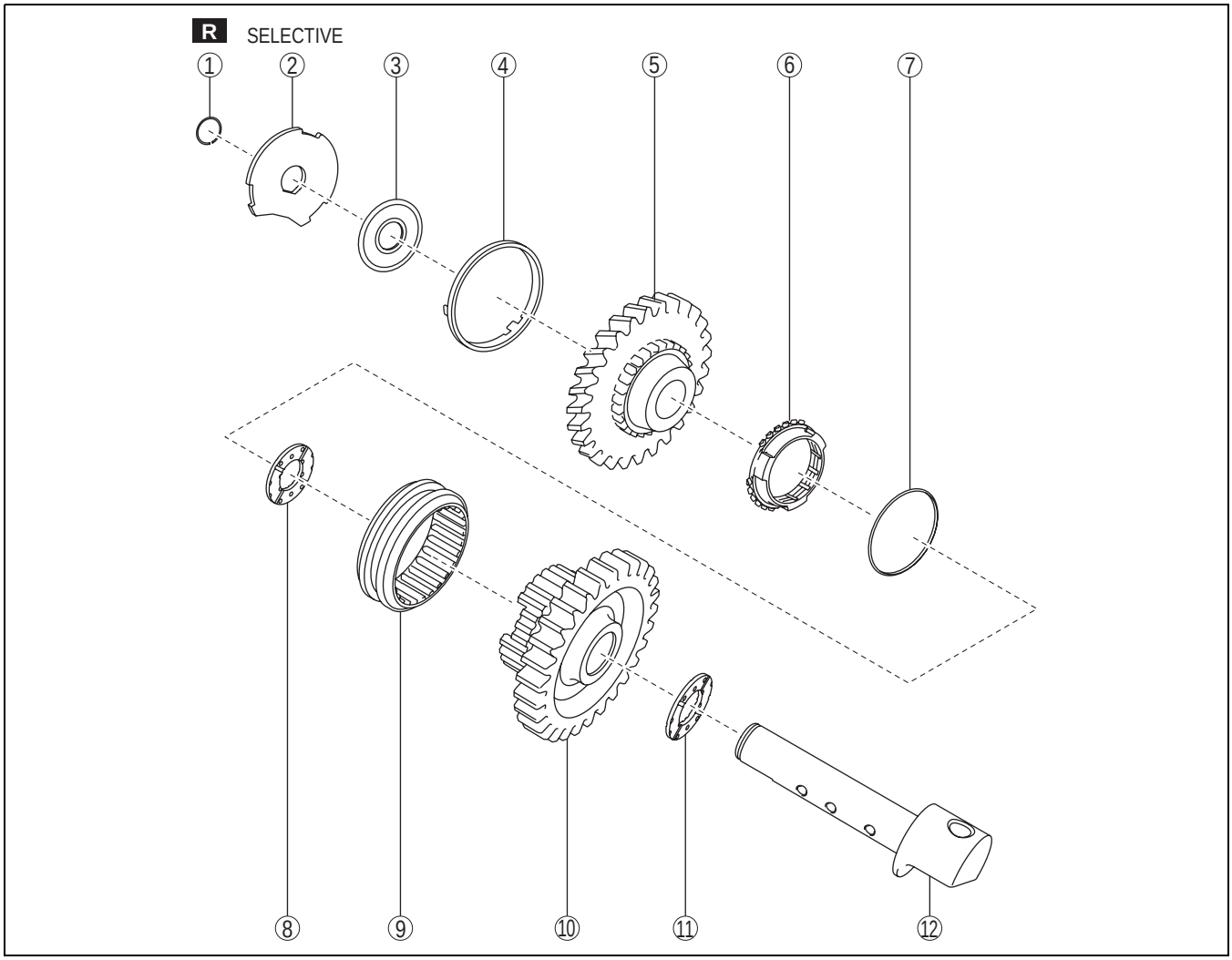

bc61um00000012

1	Clip
2	Shim
3	Needle bearing
4	Friction damper
5	Reverse idler gear
6	Synchronizer ring

7	Reverse synchronizer key spring
8	Thrust washer
9	Clutch hub sleeve
10	Reverse idler gear
11	Thrust washer
12	Reverse gear shaft

cardiagn.com

REVERSE IDLER GEAR COMPONENT INSPECTION

id051500168400

Reverse idler gear inspection

1. Inspect the gears for damage, wear, or loss.
   - If there is any malfunction, replace the reverse idler gear.
2. Inspect for damage and wear on the contact surface of the synchronizer ring.
   - If there is any malfunction, replace the reverse idler gear.

Synchronizer ring inspection

1. Inspect the teeth of the synchronizer ring for damage, wear, or loss.
   - If there is any malfunction, replace the synchronizer ring.
2. Inspect the taper surface for wear or loss.
   - If there is any malfunction, replace the synchronizer ring.
3. While holding the synchronizer ring and reverse idler gear with your fingers as shown in the figure, measure the clearance of the synchronizer ring and gear side surface around the entire circumference using a thickness gauge.
   - If it is less than the minimum specification, replace the synchronizer ring.

   Clearance between synchronizer ring and reverse idler gear side
   Specification: 0.95 mm {0.037 in}
   Minimum: 0.49 mm {0.019 in}

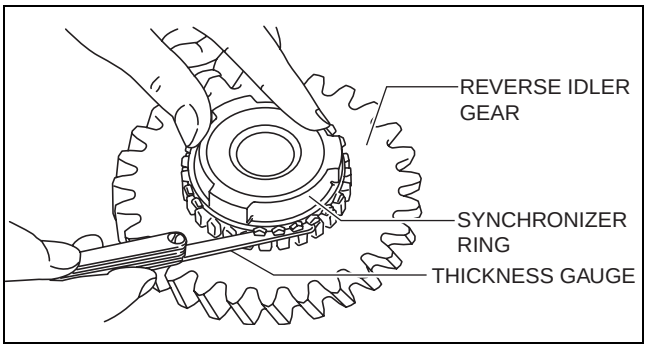

bc61um00000013

Clutch hub component inspection

1. Inspect the clutch hub sleeve and clutch hub operation.
   - If there is any malfunction, replace the malfunctioning part.
2. Inspect the spline for damage, wear or loss.
   - If there is any malfunction, replace the malfunctioning part.
3. While holding the clutch hub sleeve and shift fork together with your hand as shown in the figure, measure the clearance between the shift fork and clutch hub sleeve groove using a thickness gauge.
   - If it exceeds the maximum, replace the clutch hub sleeve and shift fork as a set.

   Clearance between shift fork and clutch hub sleeve groove
   Specification: 0.225 mm {0.00886 in}
   Maximum: 0.40 mm {0.016 in}

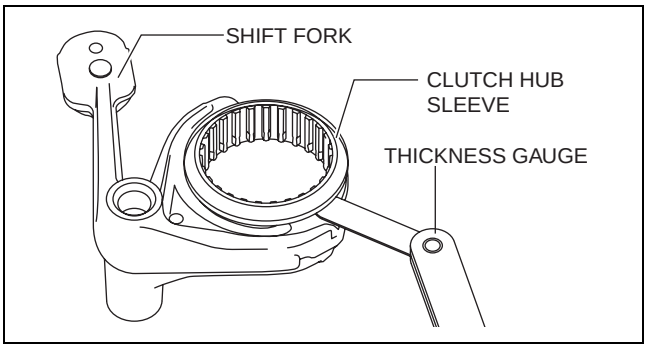

bc61um00000014

cardiagn.com

REVERSE IDLER GEAR COMPONENT ASSEMBLY

id051500168500

1. Assemble the reverse idler gear component in the order shown in the figure.

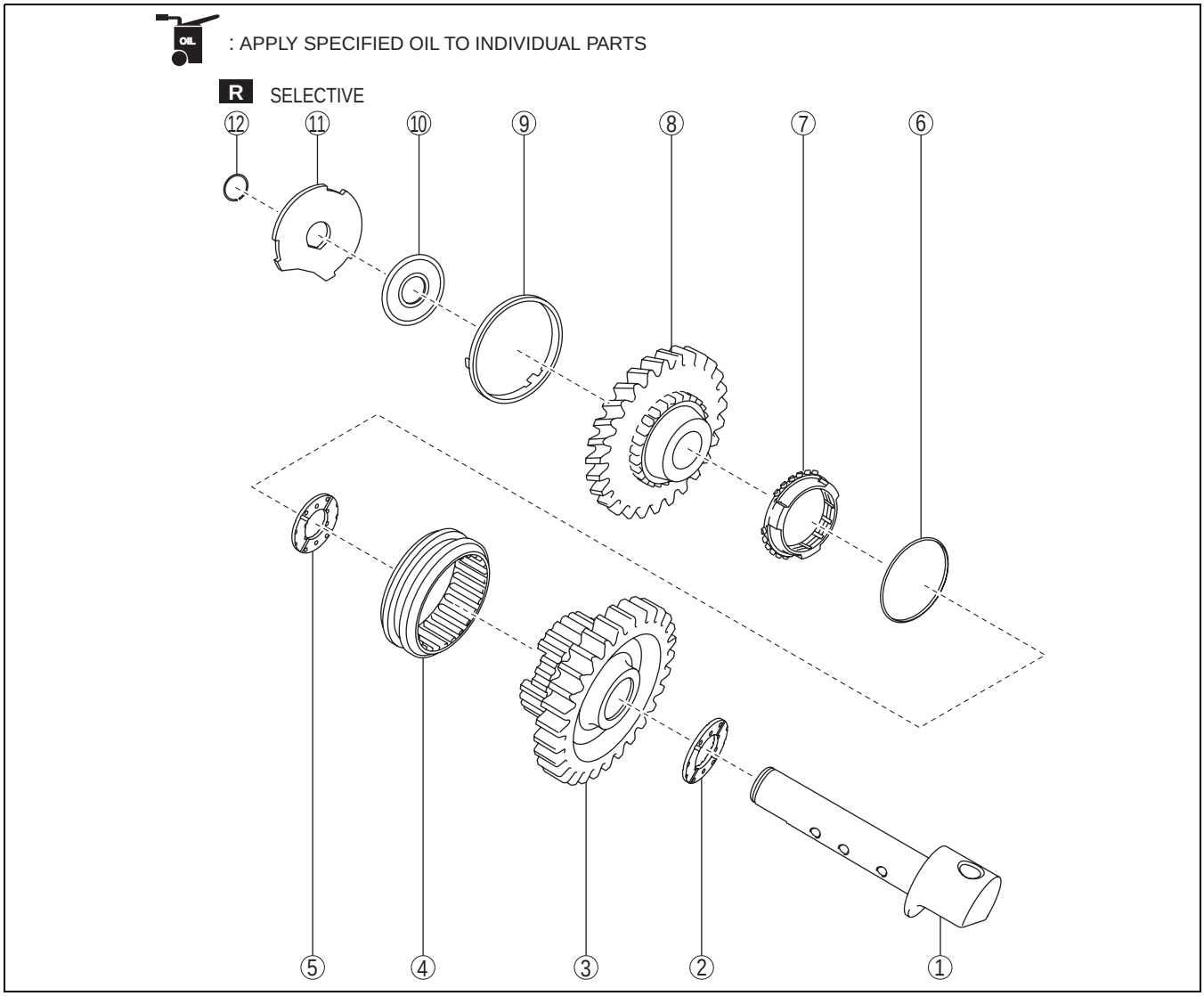

bc61um00000015

1	Reverse gear shaft
2	Thrust washer
3	Reverse idler gear
4	Clutch hub sleeve (See 05-15-17 Clutch Hub Sleeve Assembly Note.)
5	Thrust washer
6	Reverse synchronizer key spring

7	Synchronizer ring
8	Reverse idler gear
9	Friction damper
10	Needle bearing
11	Shim (See 05-15-17 Shim Assembly Note.)
12	Clip

cardiagn.com

Clutch Hub Sleeve Assembly Note

1. Assemble the clutch hub sleeve to the reverse idler gear.

   Note
   - The clutch hub sleeve can be assembled to only the specified position due to the shape of its spline. Therefore, it is necessary to find the position where the clutch hub sleeve can be assembled smoothly while gradually rotating the clutch hub sleeve in the rotation direction.

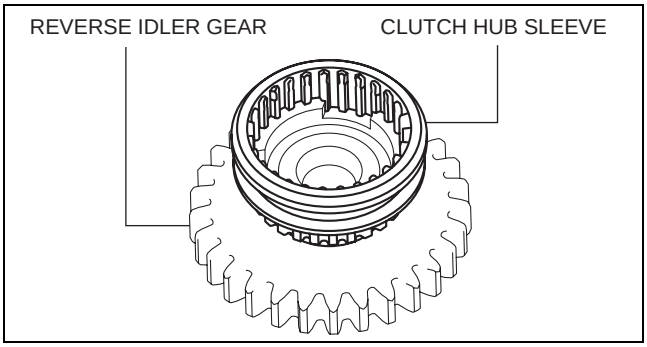

bc61um00000016

Shim Assembly Note

1. Measure distance A shown in the figure from the thrust washer to the needle bearing.
2. Select a shim of the appropriate thickness referring to the measured values in the table.

Distance A measured value		Appropriate shim thickness (mm {in})
Equal to or more (mm {in})	Less than (mm {in})	
56.495 {2.2242}	56.525 {2.2254}	3.150 {0.1240}
56.525 {2.2254}	56.575 {2.2274}	3.100 {0.1220}
56.575 {2.2274}	56.625 {2.2293}	3.050 {0.1201}
56.625 {2.2293}	56.675 {2.2313}	3.000 {0.1181}
56.675 {2.2313}	56.725 {2.2333}	2.950 {0.1161}
56.725 {2.2333}	56.775 {2.2352}	2.900 {0.1142}
56.775 {2.2352}	56.800 {2.2362}	2.850 {0.1122}

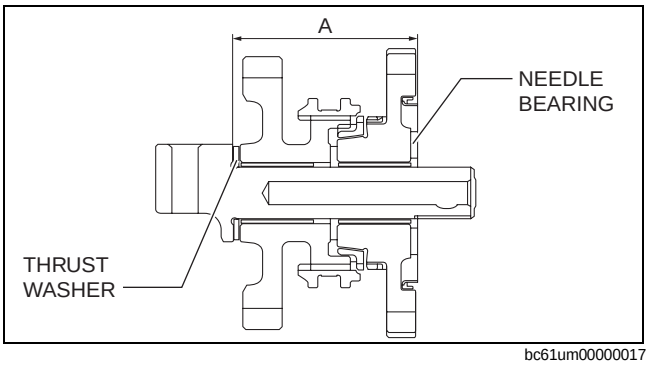

bc61um00000017

3. Assemble the selected shim.
   (1) Align the notch of the shim with the projection of the friction damper, and assemble the shim.

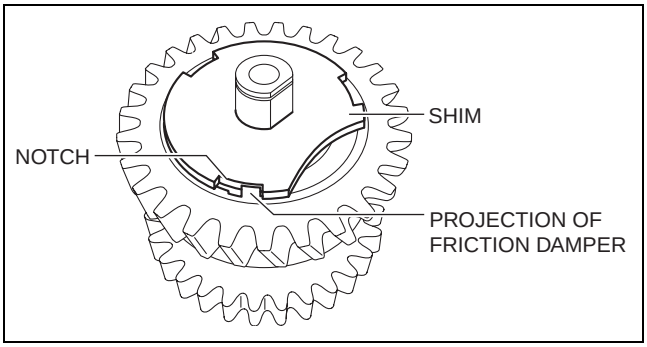

bc61um00000018

cardiagn.com

PRIMARY SHAFT COMPONENT PREINSPECTION

id051500168600

3rd Gear Thrust Clearance Inspection

1. Adjust the **SST (49 0107 680A)**, point the transaxle case assembly surface of the clutch housing upward, and then level it.
2. Assemble the primary shaft component to the clutch housing.
3. Set the dial gauge to the position of the arrow shown in the figure.
4. Hold the primary shaft component by hand.

   Note
   - To prevent error during the thrust clearance measurement, hold the primary shaft component by hand so that the primary shaft component does not move.

5. Move the 3rd gear in the axial direction and measure the 3rd gear thrust clearance.
   - If it exceeds the maximum specification, inspect the 3rd gear and surrounding parts for damage and wear and replace the malfunctioning part.

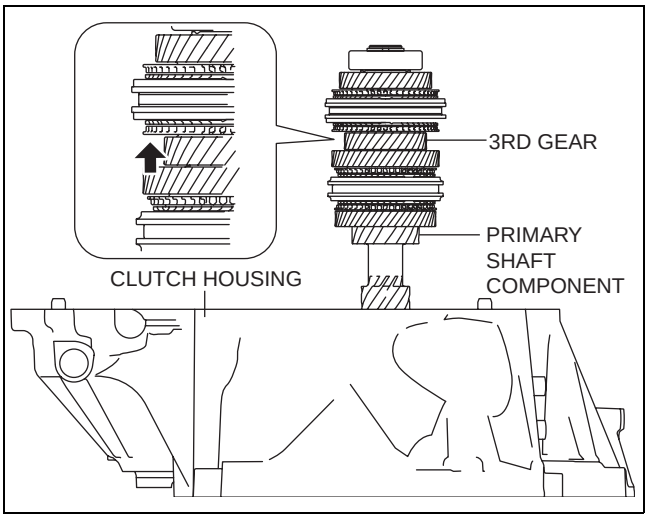

bc61um00000118

3rd gear thrust clearance
Specification: 0.257 mm {0.0101 in}
Maximum: 0.417 mm {0.0164 in}

4th Gear Thrust Clearance Inspection

1. Insert a thickness gauge into the clearance between the 4th gear and the ball bearing.
2. Rotate the thickness gauge one full rotation along the primary shaft and measure the 4th gear thrust clearance.
   - If it exceeds the maximum specification, inspect the 4th gear and surrounding parts for damage and wear and replace the malfunctioning part.

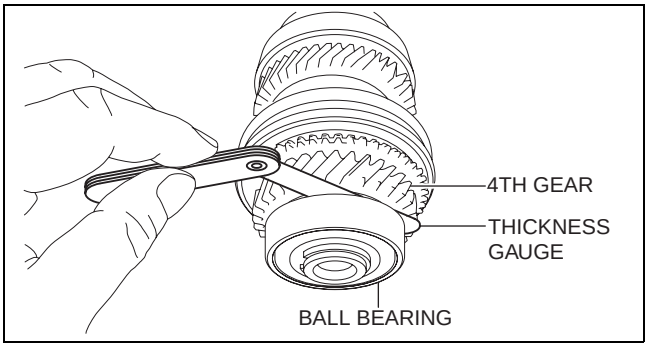

bc61um00000119

4th gear thrust clearance
Specification: 0.325 mm {0.0128 in}
Maximum: 0.489 mm {0.0193 in}

5th Gear Thrust Clearance Inspection

1. Adjust the **SST (49 0107 680A)**, point the transaxle case assembly surface of the clutch housing upward, and then level it.
2. Assemble the primary shaft component to the clutch housing.
3. Set the dial gauge to the position of the arrow shown in the figure.
4. Hold the primary shaft component by hand.

   Note
   - To prevent error during the thrust clearance measurement, hold the primary shaft component by hand so that the primary shaft component does not move.

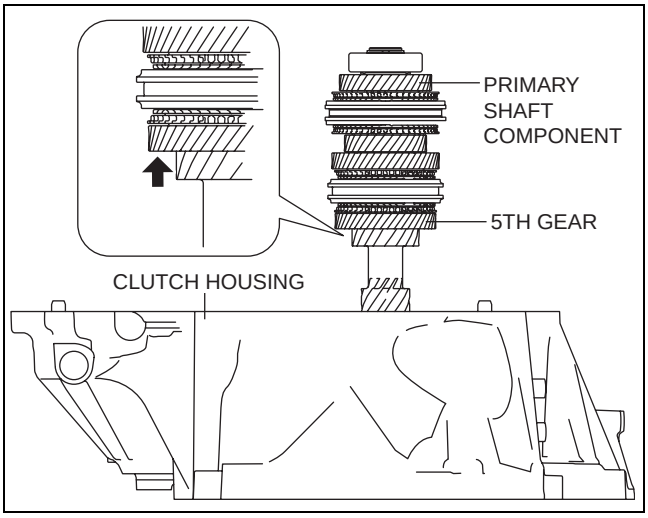

bc61um00000120

cardiagn.com

5. Move the 5th gear in the axial direction and measure the 5th gear thrust clearance.
   - If it exceeds the maximum specification, inspect the 5th gear and surrounding parts for damage and wear and replace the malfunctioning part.

5th gear thrust clearance
Specification: 0.192 mm {0.00756 in}
Maximum: 0.324 mm {0.0128 in}

6th Gear Thrust Clearance Inspection

1. Adjust the **SST (49 0107 680A)**, point the transaxle case assembly surface of the clutch housing upward, and then level it.
2. Assemble the primary shaft component to the clutch housing.
3. Set the dial gauge to the position of the arrow shown in the figure.
4. Hold the primary shaft component by hand.

Note
- To prevent error during the thrust clearance measurement, hold the primary shaft component by hand so that the primary shaft component does not move.

5. Move the 6th gear in the axial direction and measure the 6th gear thrust clearance.
   - If it exceeds the maximum specification, inspect the 6th gear and surrounding parts for damage and wear and replace the malfunctioning part.

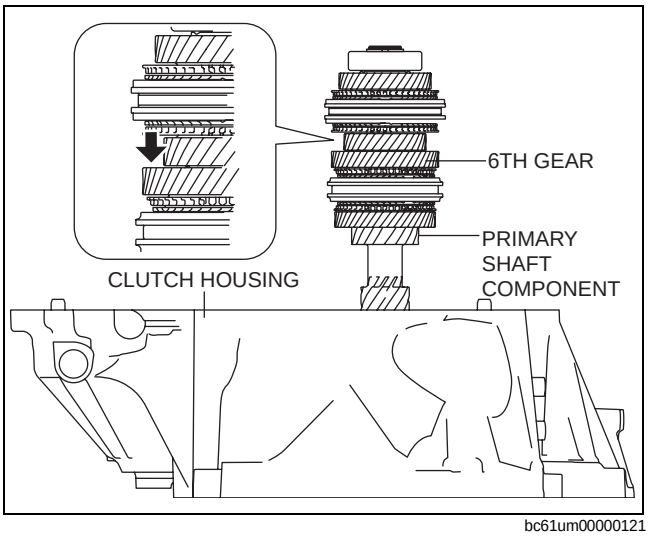

bc61um00000121

6th gear thrust clearance
Specification: 0.262 mm {0.0103 in}
Maximum: 0.398 mm {0.0157 in}

cardiagn.com

PRIMARY SHAFT COMPONENT DISASSEMBLY

id051500168700

1. Disassemble the primary shaft component as shown in the figure.

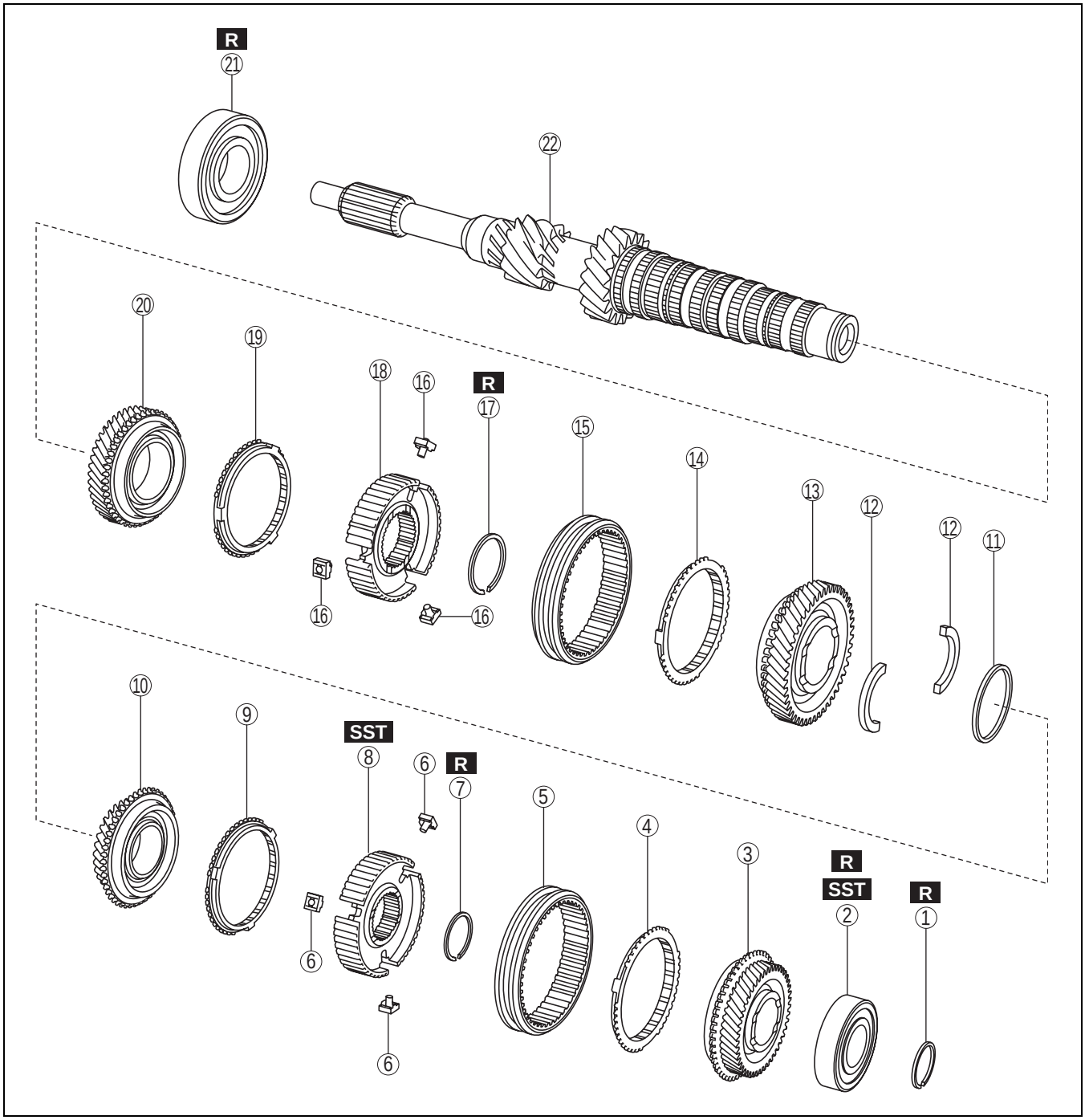

bc61um00000019

1	Clip
2	Ball bearing (See 05-15-21 Ball Bearing (Transaxle Case Side) Removal Note.)
3	4th gear
4	Synchronizer ring
5	Clutch hub sleeve
6	Synchronizer key
7	Clip
8	Clutch hub (3GR/4GR) (See 05-15-21 Clutch Hub (3GR/4GR) Removal Note.)

9	Synchronizer ring
10	3rd gear
11	Holder
12	Retaining ring
13	6th gear
14	Synchronizer ring
15	Clutch hub sleeve
16	Synchronizer key
17	Clip

cardiagn.com

18	Clutch hub (5GR/6GR) (See 05-15-21 Clutch Hub (5GR/6GR) Removal Note.)
19	Synchronizer ring
20	5th gear
21	Ball bearing (See 05-15-22 Ball Bearing (Clutch Housing Side) Removal Note.)
22	Primary shaft

Ball Bearing (Transaxle Case Side) Removal Note

1. Set the primary shaft component and **SST**s in a press as shown in the figure.
2. Disassemble the ball bearing using the press.

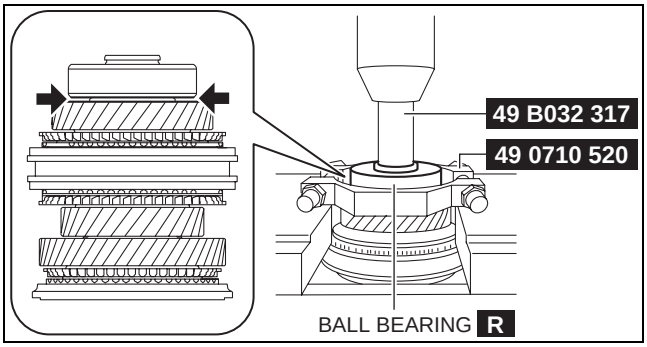

bc61um00000128

Clutch Hub (3GR/4GR) Removal Note

1. Set the primary shaft component and **SST** in a press as shown in the figure.
2. Remove from the clutch hub to the 3rd gear as a single unit using the press.

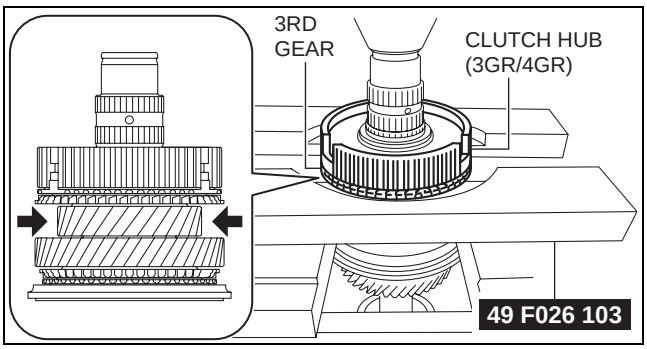

bc61um00000129

Clutch Hub (5GR/6GR) Removal Note

1. Set the primary shaft component in a press as shown in the figure.
2. Remove from the clutch hub to the 5th gear as a single unit using the press.

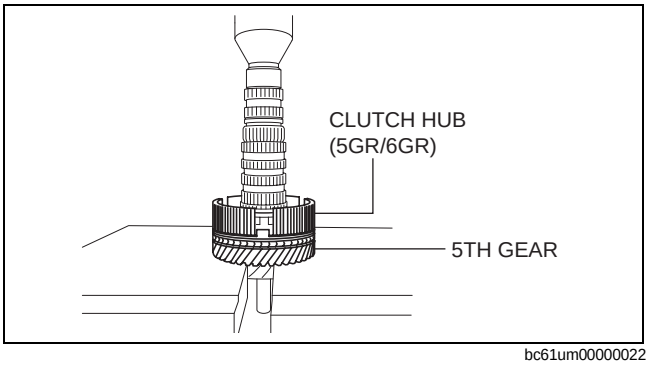

bc61um00000022

cardiagn.com

Ball Bearing (Clutch Housing Side) Removal Note

1. Set the primary shaft component in a press as shown in the figure.
2. Remove the ball bearing using the press.

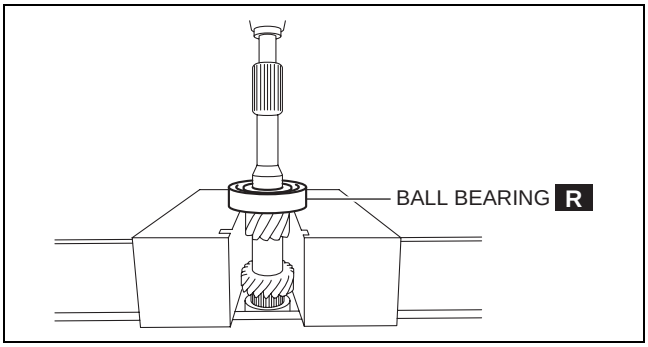

bc61um00000023

PRIMARY SHAFT COMPONENT INSPECTION

id051500168800

Gear Inspection

1. Inspect the gears for damage, wear, or loss.
   - If there is any malfunction, replace the gear.
2. Inspect the gears and synchronizer rings for damage and wear on contact surfaces.
   - If there is any malfunction, replace the gear.
3. Measure the inner diameter of the gear using a cylinder gauge in X and Y directions as shown in the figure.
   - If it exceeds the maximum specification, replace the gear.

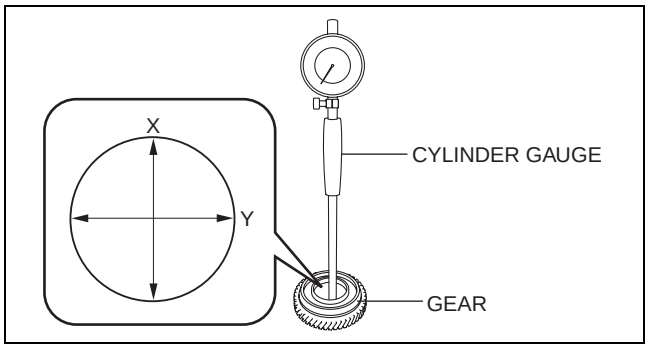

bc61um00000024

Inner diameter of gear

Measurement location	Specification (mm {in})	Maximum (mm {in})
3rd gear	37.01 {1.4571}	37.02 {1.4575}
4th gear	32.81 {1.2917}	32.82 {1.2921}
5th gear	42.01 {1.6539}	42.02 {1.6543}
6th gear	37.01 {1.4571}	37.02 {1.4575}

Primary Shaft Inspection

1. Inspect the spline for damage and wear.
   - If there is any malfunction, replace the primary shaft.
2. Inspect the gear area for damage, wear, and loss.
   - If there is any malfunction, replace the primary shaft.
3. Measure the lateral runout of the primary shaft.
   (1) Set the primary shaft on V-blocks so that the V-blocks support the primary shaft journal as shown in the figure.
   (2) Measure the lateral runout of the position shown in the figure for the primary shaft using a dial gauge.
   - If it exceeds the maximum specification, replace the primary shaft.

Lateral runout of primary shaft
Maximum: 0.05 mm {0.002 in}

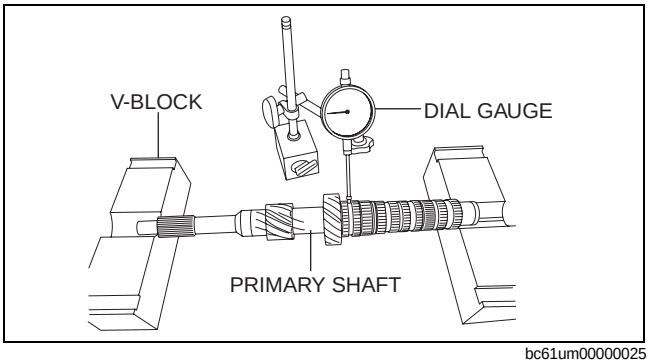

bc61um00000025

cardiagn.com

4. Measure the outer diameter of the primary shaft using a micrometer. Measurement positions total eight and are in the X and Y directions, at four points (A, B, C, and D) as shown in the figure.
   - If it is less than the minimum specification, replace the primary shaft.

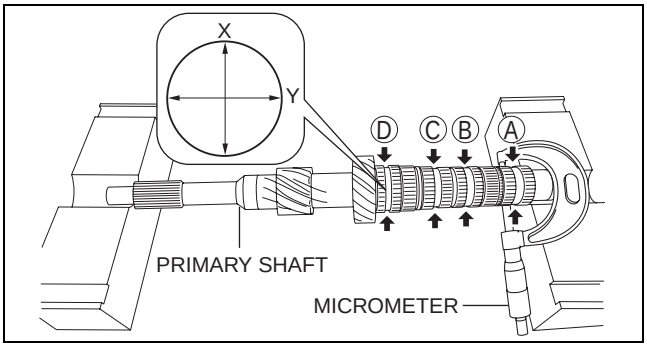

bc61um00000026

Outer diameter of primary shaft

Measurement location	Specification (mm {in})	Minimum (mm {in})
A: 4th gear assembly part	32.77 {1.2902}	32.76 {1.2898}
B: 3rd gear assembly part	36.97 {1.4555}	36.96 {1.4551}
C: 6th gear assembly part	36.97 {1.4555}	36.96 {1.4551}
D: 5th gear assembly part	41.97 {1.6524}	41.96 {1.652}

Synchronizer Ring Inspection

1. Inspect the teeth of the synchronizer ring for damage, wear, or loss.
   - If there is any malfunction, replace the synchronizer ring.
2. Inspect the taper surface for wear or loss.
   - If there is any malfunction, replace the synchronizer ring.
3. While holding the synchronizer ring and gear with your fingers as shown in the figure, measure the clearance of the synchronizer ring and gear side surface around the entire circumference using a thickness gauge.
   - If it is less than the minimum specification, replace the synchronizer ring.

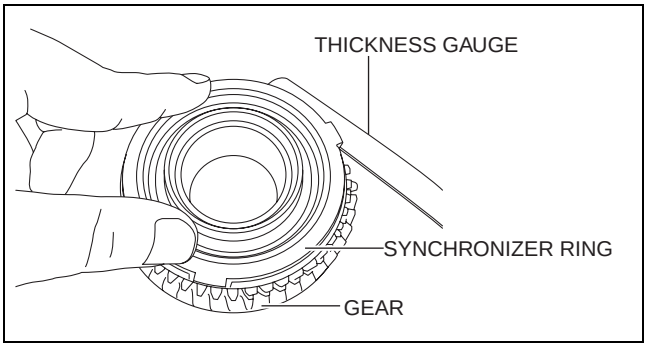

bc61um00000027

Clearance between synchronizer ring and gear

Measurement location	Specification (mm {in})	Minimum (mm {in})
Synchronizer ring (3GR)	0.97 {0.038}	0.32 {0.013}
Synchronizer ring (4GR)	1.05 {0.0413}	0.40 {0.016}
Synchronizer ring (5GR)	1.15 {0.0453}	0.50 {0.020}
Synchronizer ring (6GR)	1.15 {0.0453}	0.50 {0.020}

Clutch Hub Component Inspection

1. Inspect the clutch hub sleeve and clutch hub operation.
   - If there is any malfunction, replace the malfunctioning part.
2. Inspect the spline for damage, wear or loss.
   - If there is any malfunction, replace the malfunctioning part.
3. While holding the clutch hub sleeve and shift fork together with your hand as shown in the figure, measure the clearance between the shift fork and clutch hub sleeve groove using a thickness gauge.
   - If it exceeds the maximum, replace the clutch hub sleeve and shift fork as a set.

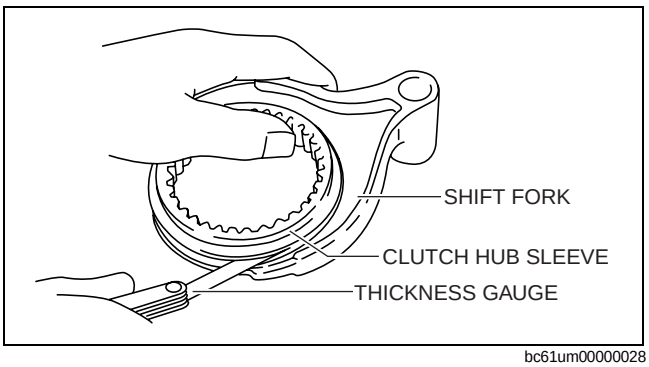

bc61um00000028

cardiagn.com

Clearance between shift fork and clutch hub sleeve groove

Measurement location	Specification (mm {in})	Maximum (mm {in})
Shift fork (3GR/4GR)	0.225 {0.00886}	0.40 {0.016}
Shift fork (5GR/6GR)	0.225 {0.00886}	0.40 {0.016}

PRIMARY SHAFT COMPONENT ASSEMBLY

id051500168900

1. Assemble the primary shaft component using the procedure shown in the figure.

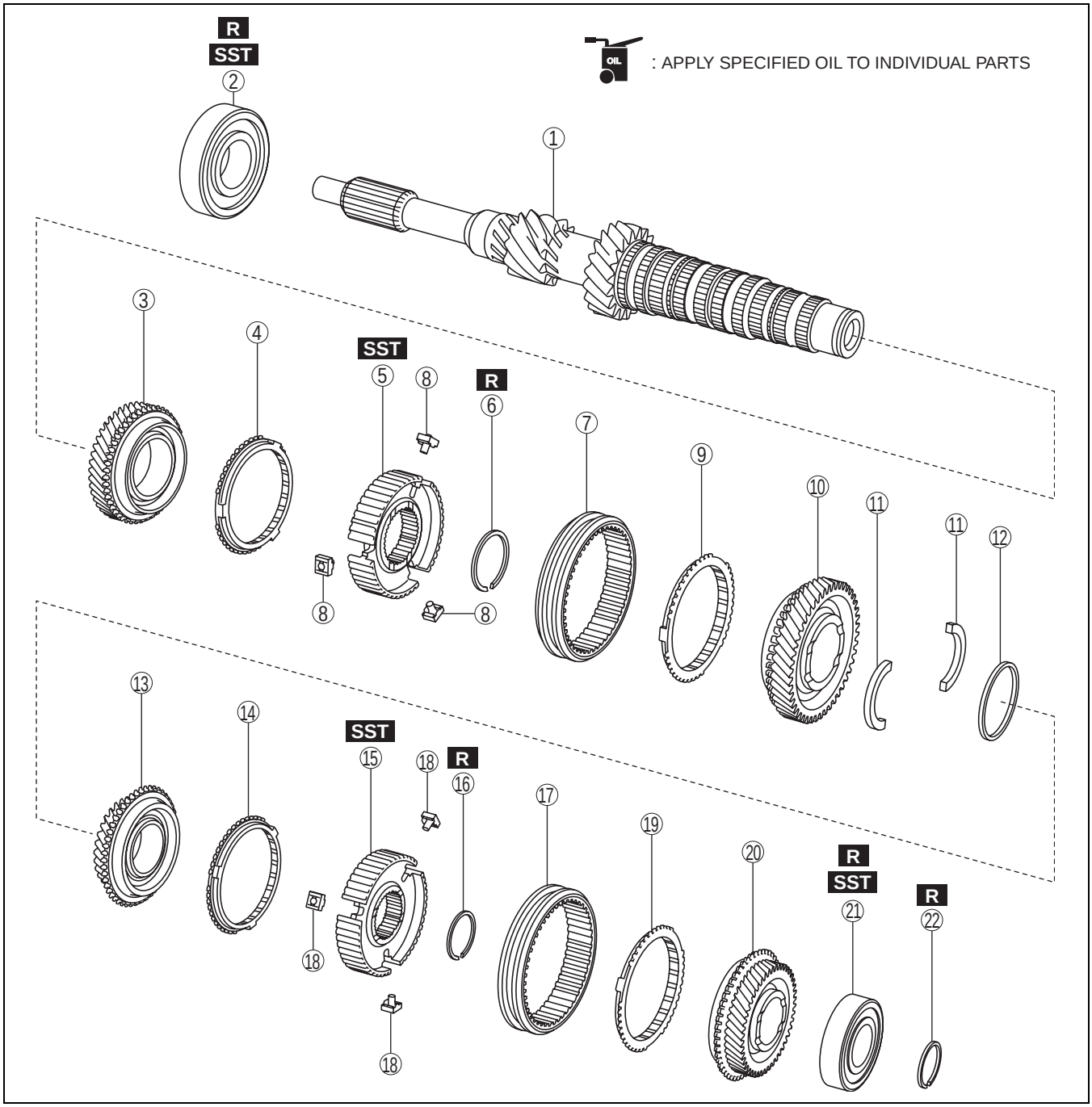

bc61um00000029

1	Primary shaft
2	Ball bearing (See 05-15-25 Ball Bearing (Clutch Housing Side) Assembly Note.)
3	5th gear
4	Synchronizer ring

5	Clutch hub (5GR/6GR) (See 05-15-25 Clutch Hub (5GR/6GR) Assembly Note.)
6	Clip
7	Clutch hub sleeve (See 05-15-25 Clutch Hub Sleeve Assembly Note.)

cardiagn.com

8	Synchronizer key (See 05-15-26 Synchronizer Key Assembly Note.)
9	Synchronizer ring (See 05-15-26 Synchronizer Ring Assembly Note.)
10	6th gear
11	Retaining ring
12	Holder
13	3rd gear
14	Synchronizer ring
15	Clutch hub (3GR/4GR) (See 05-15-27 Clutch Hub (3GR/4GR) Assembly Note.)
16	Clip
17	Clutch hub sleeve (See 05-15-25 Clutch Hub Sleeve Assembly Note.)
18	Synchronizer key (See 05-15-26 Synchronizer Key Assembly Note.)
19	Synchronizer ring (See 05-15-26 Synchronizer Ring Assembly Note.)
20	4th gear
21	Ball bearing (See 05-15-27 Ball Bearing (Transaxle Case Side) Assembly Note.)
22	Clip

Ball Bearing (Clutch Housing Side) Assembly Note

1. Set the primary shaft and new ball bearing, and the **SST**s in a press as shown in the figure.
2. Assemble the ball bearing using the press.

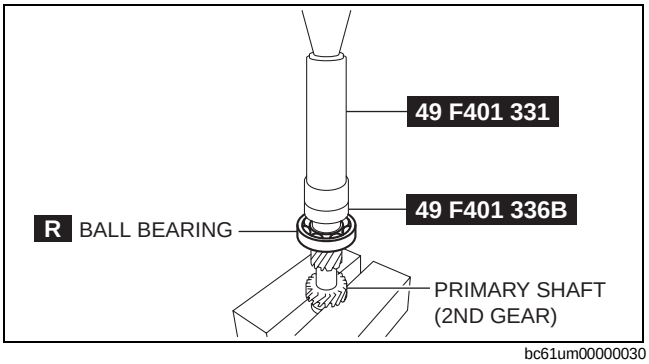

bc61um00000030

Clutch Hub (5GR/6GR) Assembly Note

1. Set the primary shaft component and **SST** in a press as shown in the figure.
2. Align the projection of the synchronizer ring with the key groove of the clutch hub.
3. Assemble the clutch hub using the press.

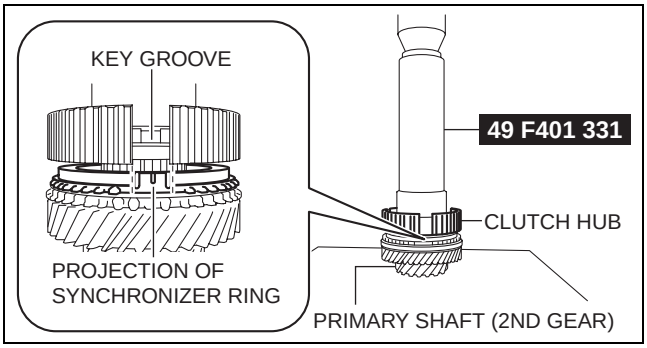

bc61um00000031

Clutch Hub Sleeve Assembly Note

1. Align the positioning groove of the clutch hub sleeve so that it is lined up with the center of the key groove of the clutch hub, and assemble the clutch hub sleeve.

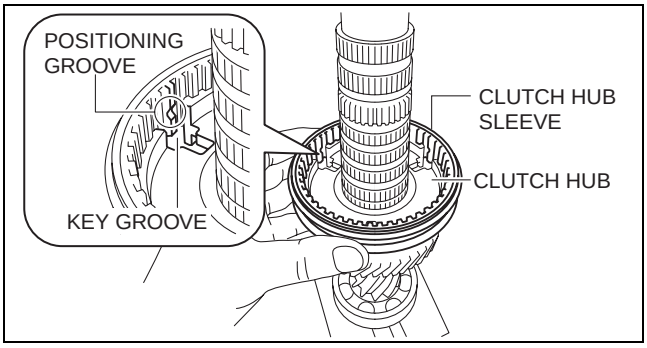

bc61um00000032

cardiagn.com

Synchronizer Key Assembly Note

1. Align with the direction of the synchronizer key as shown in the figure, and assemble the clutch hub.

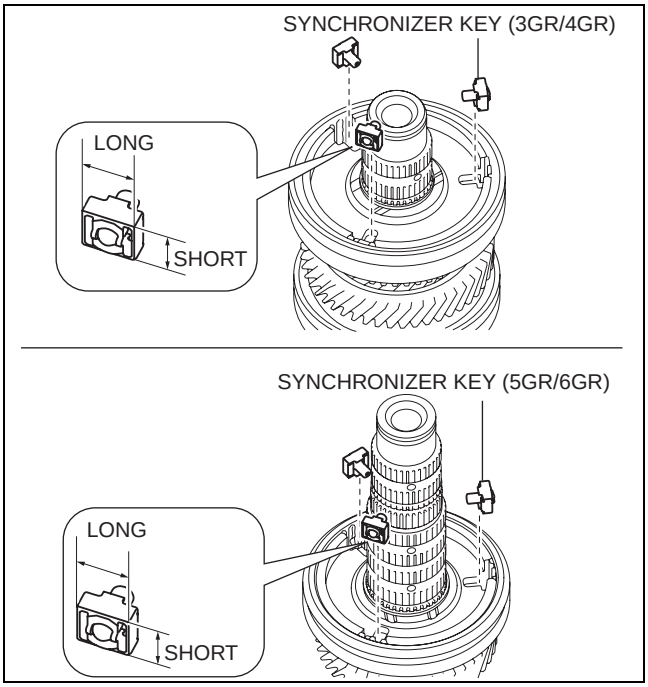

bc61um00000033

2. After the synchronizer key is assembled, verify that the detent ball of the synchronizer key is engaged with the positioning groove of the clutch hub sleeve.

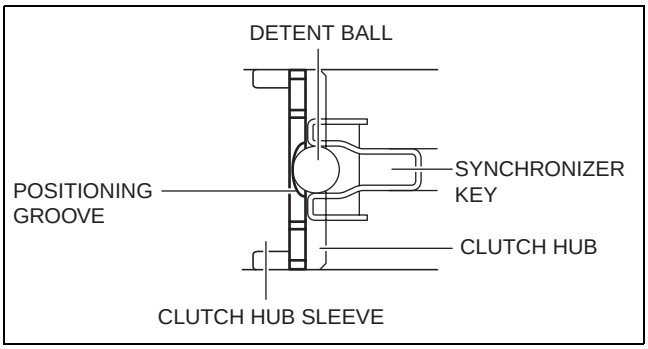

bc61um00000130

Synchronizer Ring Assembly Note

1. Align the projection of the synchronizer ring with the key groove of the clutch hub as shown in the figure, and assemble the synchronizer ring.

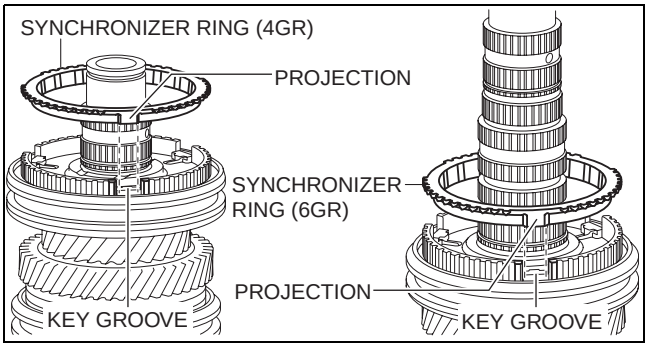

bc61um00000034

cardiagn.com

Clutch Hub (3GR/4GR) Assembly Note

1. Set the primary shaft component and **SST** in a press as shown in the figure.
2. Align the projection of the synchronizer ring with the positioning groove of the clutch hub key.
3. Assemble the clutch hub using the press.

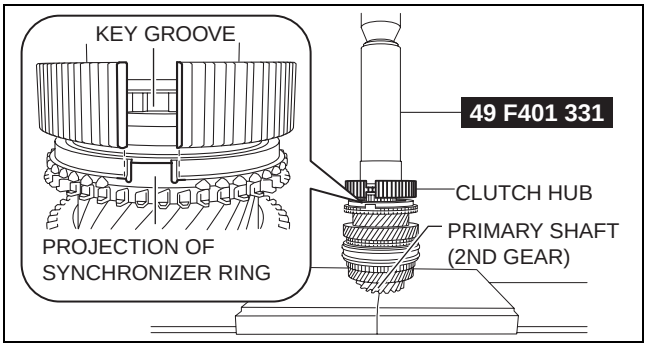

bc61um00000035

Ball Bearing (Transaxle Case Side) Assembly Note

1. Set the primary shaft component, new ball bearing, **SST**, and an appropriate steel plate in a press as shown in the figure.
2. Assemble the ball bearing using the press.

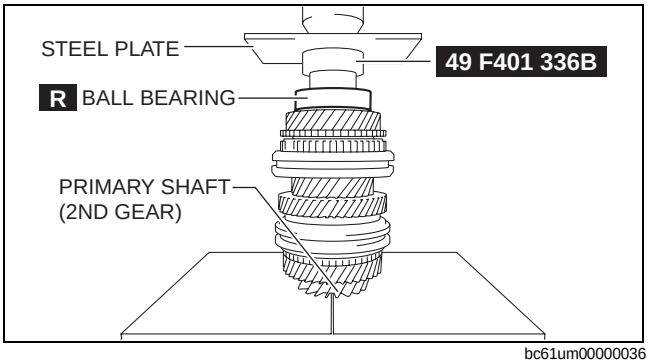

bc61um00000036

SECONDARY SHAFT COMPONENT PREINSPECTION

id051500169000

Secondary 1st Gear Thrust Clearance Inspection

1. Insert a thickness gauge into the clearance between the secondary 1st gear and the secondary shaft differential drive gear.
2. Route the thickness gauge one full rotation along the secondary shaft and measure the secondary 1st gear thrust clearance.
   - If it exceeds the maximum specification, inspect the secondary 1st gear and surrounding parts for damage and wear and replace the malfunctioning part.

   Secondary 1st gear thrust clearance
   Specification: 0.174 mm {0.00685 in}
   Maximum: 0.291 mm {0.0115 in}

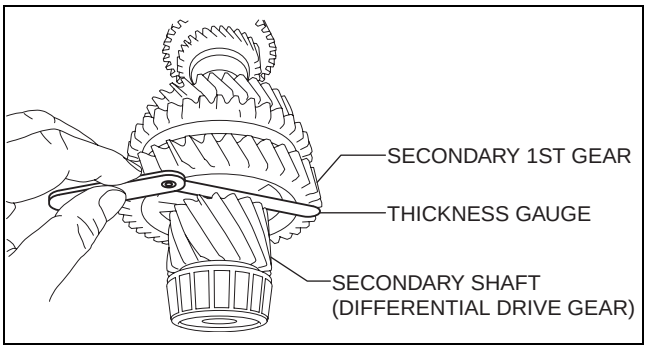

bc61um00000122

Secondary 2nd Gear Thrust Clearance Inspection

1. Insert the thickness gauge into the clearance between the secondary 2nd gear and the secondary 5th gear.
2. Route the thickness gauge one full rotation along the secondary shaft and measure the secondary 2nd gear thrust clearance.
   - If it exceeds the maximum specification, inspect the secondary 2nd gear and surrounding parts for damage and wear and replace the malfunctioning part.

   Secondary 2nd gear thrust clearance
   Specification: 0.174 mm {0.00685 in}
   Maximum: 0.294 mm {0.0116 in}

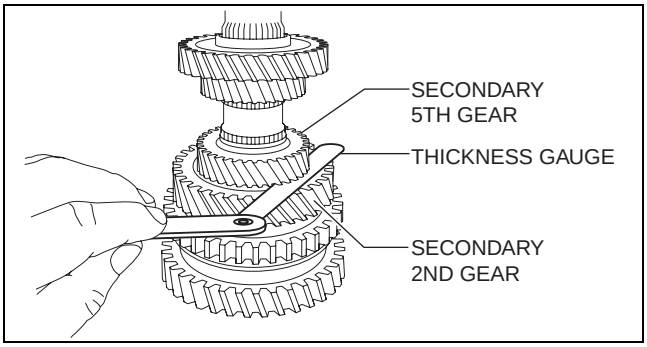

bc61um00000123

cardiagn.com

SECONDARY SHAFT COMPONENT DISASSEMBLY

id051500169100

1. Disassemble the secondary shaft component in the order shown in the figure.

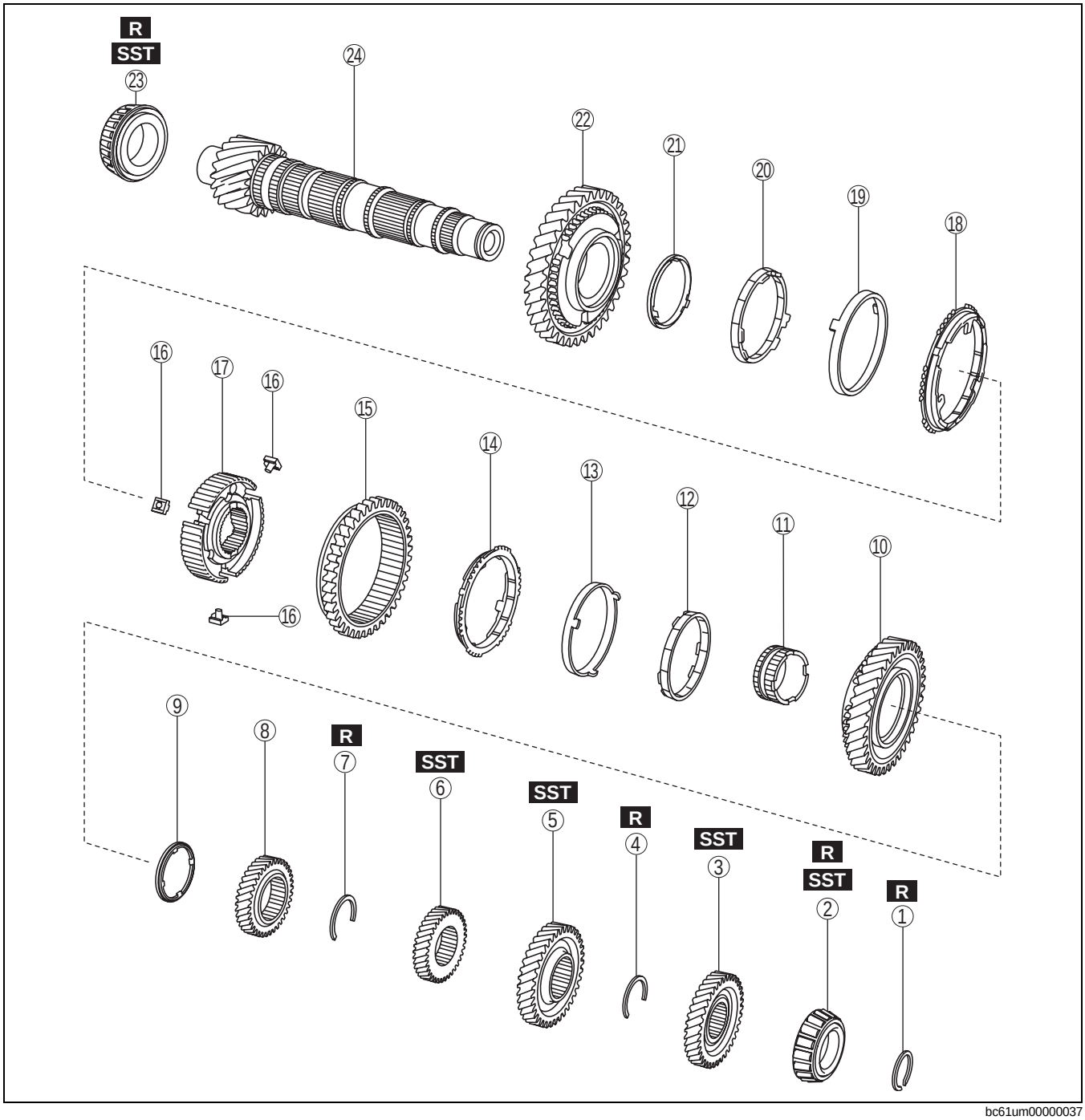

bc61um00000037

1	Clip
2	Tapered roller bearing (See 05-15-29 Tapered Roller Bearing (Transaxle Case Side), Secondary 4th Gear Removal Note.)
3	Secondary 4th gear (See 05-15-29 Tapered Roller Bearing (Transaxle Case Side), Secondary 4th Gear Removal Note.)
4	Clip
5	Secondary 3rd gear (See 05-15-29 Secondary 3rd Gear, Secondary 6th Gear Removal Note.)

6	Secondary 6th gear (See 05-15-29 Secondary 3rd Gear, Secondary 6th Gear Removal Note.)
7	Clip
8	Secondary 5th gear (See 05-15-29 Secondary 5th Gear Removal Note.)
9	Friction damper
10	Secondary 2nd gear
11	Gear sleeve
12	Inner cone ring
13	Middle cone ring
14	Synchronizer ring

cardiagn.com

15	Clutch hub sleeve
16	Synchronizer key
17	Clutch hub
18	Synchronizer ring
19	Middle cone ring
20	Inner cone ring

21	Friction damper
22	Secondary 1st gear
23	Tapered roller bearing (See 05-15-30 Tapered Roller Bearing (Clutch Housing Side) Removal Note.)
24	Secondary shaft

Tapered Roller Bearing (Transaxle Case Side), Secondary 4th Gear Removal Note

1. Set the **SST**s and secondary shaft component in a press.
2. Remove the tapered roller bearing and secondary 4th gear simultaneously using the press.

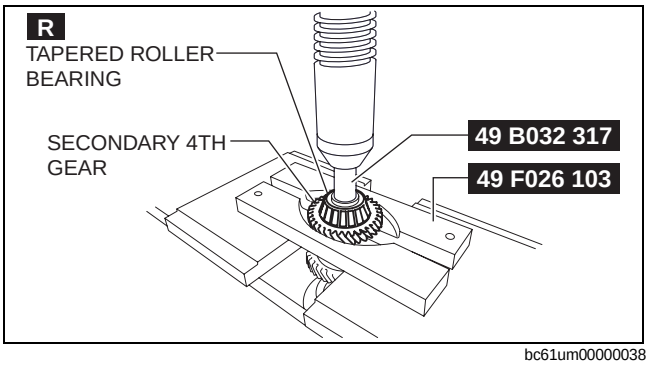

bc61um00000038

Secondary 3rd Gear, Secondary 6th Gear Removal Note

1. Set the **SST** and secondary shaft component in a press as shown in the figure.
2. Remove the secondary 3rd gear and secondary 6th gear using the press.

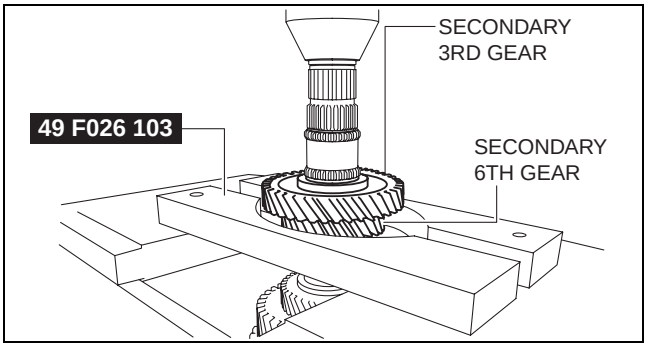

bc61um00000039

Secondary 5th Gear Removal Note

1. Set the secondary shaft component in a press as shown in the figure.
2. Remove all parts from the secondary 5th gear to the secondary 1st gear simultaneously using the press.

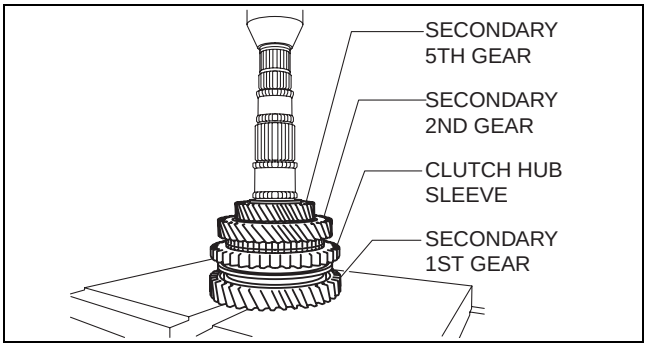

bc61um00000040

cardiagn.com

Tapered Roller Bearing (Clutch Housing Side) Removal Note

1. Set the **SST**s and secondary shaft component in a press as shown in the figure.
2. Remove the tapered roller bearing using the press.

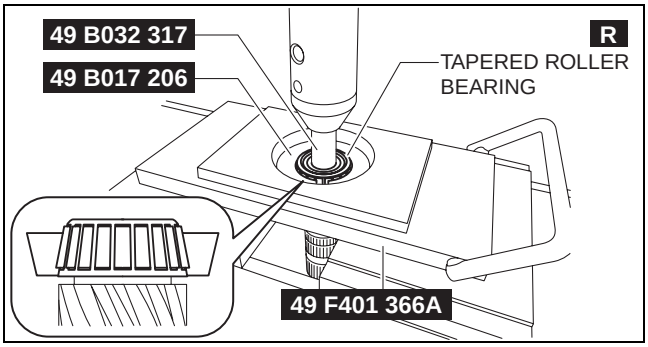

bc61um00000041

SECONDARY SHAFT COMPONENT INSPECTION

id051500169200

Gear Inspection

1. Inspect the gears for damage, wear, or loss.
   - If there is any malfunction, replace the gear.
2. Inspect the gears and synchronizer rings for damage and wear on contact surfaces.
   - If there is any malfunction, replace the gear.
3. Measure the inner diameter of the gear using a cylinder gauge in X and Y directions as shown in the figure.
   - If it exceeds the maximum specification, replace the gear.

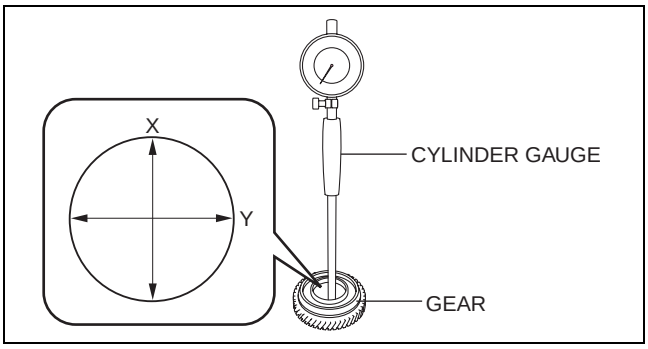

bc61um00000024

Inner diameter of gear

Measurement location	Specification (mm {in})	Maximum (mm {in})
Secondary 1st gear	41.512 {1.6343}	41.525 {1.6348}
Secondary 2nd gear	46.534 {1.8320}	46.544 {1.8324}

Gear sleeve inspection

1. Measure the outer diameter of the gear sleeve using the micrometer in X and Y directions as shown in the figure.
   - If is less than the minimum specification, replace the gear sleeve.

   Outer diameter of gear sleeve
   Specification: 46.444 mm {1.8285 in}
   Minimum: 46.434 mm {1.8281 in}

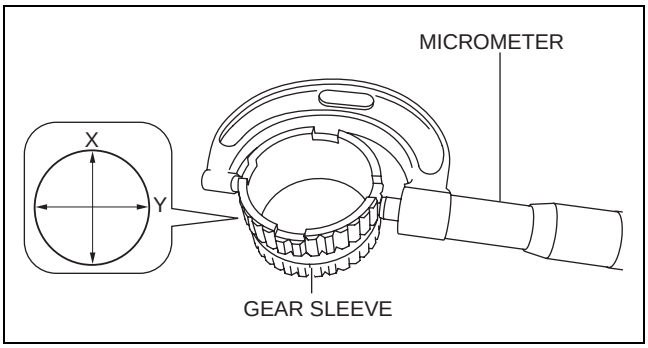

bc61um00000043

cardiagn.com

Secondary Shaft Inspection

1. Inspect the spline for damage and wear.
   - If there is any malfunction, replace the secondary shaft.
2. Inspect the gear area for damage, wear, and loss.
   - If there is any malfunction, replace the secondary shaft.
3. Measure the lateral runout of the secondary shaft.
   (1) Set the secondary shaft on V-blocks so that the V-blocks support the secondary shaft journal as shown in the figure.
   (2) Measure the lateral runout of the secondary shaft at the position shown in the figure using a dial gauge.
   - If it exceeds the maximum specification, replace the secondary shaft.

   Lateral runout of secondary shaft
   Maximum: 0.05 mm {0.002 in}

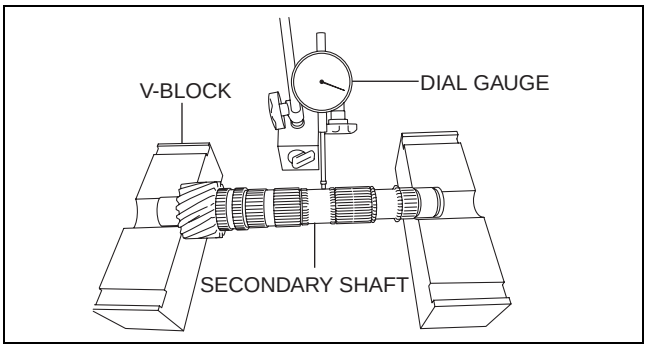

bc61um00000044

4. Measure the outer diameter of the secondary shaft at the position shown in the figure using a micrometer. Measurement positions total four and are in the X and Y directions, at two points (A and B) as shown in the figure.
   - If is less than the minimum specification, replace the secondary shaft.

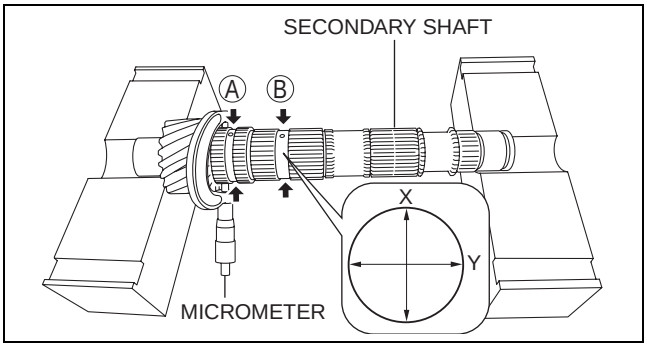

bc61um00000045

Outer diameter of secondary shaft

Measurement location	Specification (mm {in})	Minimum (mm {in})
A: Secondary 1st gear assembly part	41.457 {1.6322}	41.445 {1.6317}
B: Secondary 2nd gear assembly part	39.276 {1.5463}	39.266 {1.5459}

Synchronizer Ring Inspection

1. Inspect the teeth of the synchronizer ring for damage, wear, or loss.
   - If there is any malfunction, replace the synchronizer ring.
2. Inspect the taper surface for wear or loss.
   - If there is any malfunction, replace the synchronizer ring.
3. While holding the synchronizer ring and gear with your fingers as shown in the figure, measure the clearance of the synchronizer ring and gear side surface around the entire circumference using a thickness gauge.
   - If it is less than the minimum specification, replace the synchronizer ring.

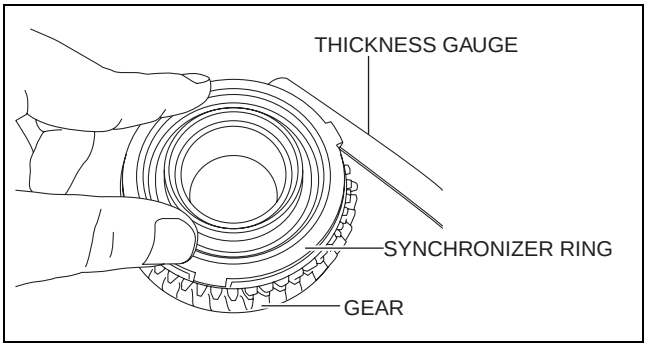

bc61um00000027

Clearance between synchronizer ring and gear

Measurement location	Specification (mm {in})	Minimum (mm {in})
Synchronizer ring (1GR)	0.94 {0.037}	0.55 {0.022}
Synchronizer ring (2GR)	0.94 {0.037}	0.55 {0.022}

cardiagn.com

Clutch Hub Component Inspection

1. Inspect the clutch hub sleeve and clutch hub operation.
   - If there is any malfunction, replace the malfunctioning part.
2. Inspect the spline for damage, wear or loss.
   - If there is any malfunction, replace the malfunctioning part.
3. While holding the clutch hub sleeve and shift fork together with your hand as shown in the figure, measure the clearance between the shift fork and clutch hub sleeve groove using a thickness gauge.
   - If it exceeds the maximum specification, replace the clutch hub sleeve and shift fork as a set.

   Clearance between shift fork and clutch hub sleeve groove
   Specification: 0.225 mm {0.00886 in}
   Maximum: 0.40 mm {0.016 in}

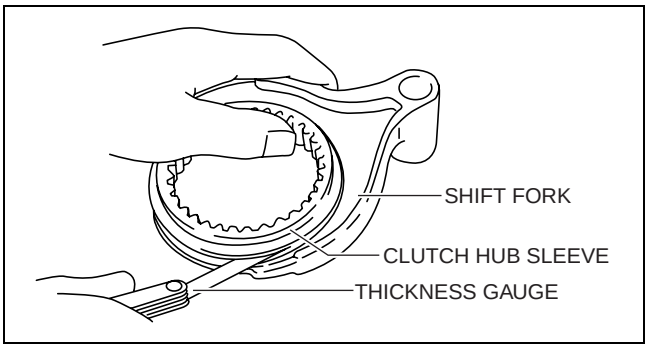

bc61um00000028

SECONDARY SHAFT COMPONENT ASSEMBLY

id051500169300

1. Assemble the secondary shaft component in the order shown in the figure.

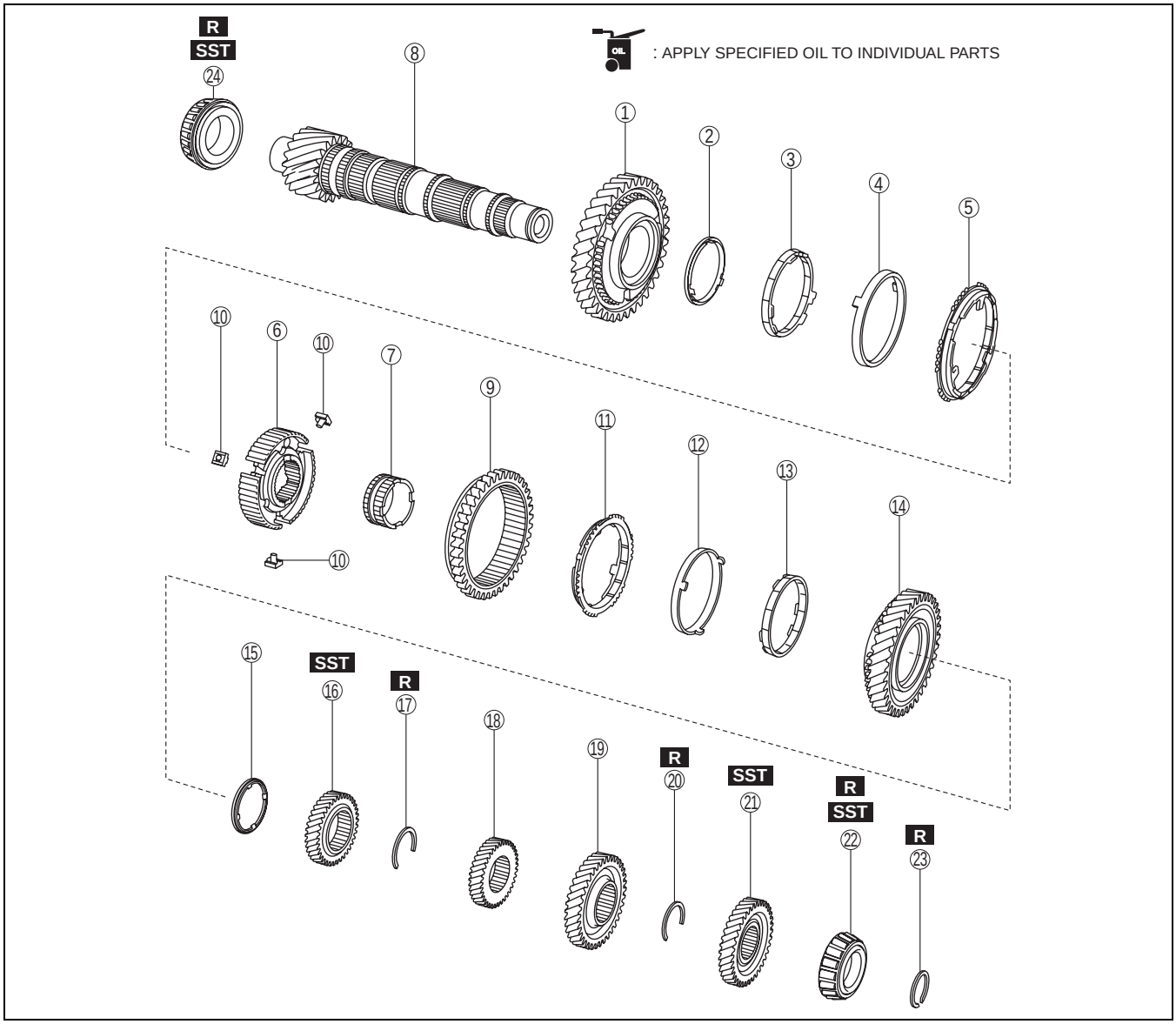

bc61um00000048

cardiagn.com

1	Secondary 1st gear
2	Friction damper
3	Inner cone ring
4	Middle cone ring (See 05-15-33 Middle Cone Ring Assembly Note.)
5	Synchronizer ring (See 05-15-34 Synchronizer Ring (Secondary 1st Gear) Assembly Note.)
6	Clutch hub (See 05-15-34 Clutch Hub Assembly Note.)
7	Gear sleeve (See 05-15-35 Gear Sleeve Assembly Note.)
8	Secondary shaft (See 05-15-35 Secondary Shaft Assembly Note.)
9	Clutch hub sleeve (See 05-15-36 Clutch Hub Sleeve Assembly Note.)
10	Synchronizer key (See 05-15-37 Synchronizer Key Assembly Note.)
11	Synchronizer ring (See 05-15-37 Synchronizer Ring (Secondary 2nd Gear) Assembly Note.)
12	Middle cone ring
13	Inner cone ring
14	Secondary 2nd gear (See 05-15-37 Secondary 2nd Gear Assembly Note.)
15	Friction damper (See 05-15-38 Friction Damper (Secondary 2nd Gear) Assembly Note.)
16	Secondary 5th gear (See 05-15-38 Secondary 5th Gear Assembly Note.)
17	Clip
18	Secondary 6th gear (See 05-15-39 Secondary 6th Gear and Secondary 3rd Gear Assembly Note.)
19	Secondary 3rd gear (See 05-15-39 Secondary 6th Gear and Secondary 3rd Gear Assembly Note.)
20	Clip
21	Secondary 4th gear (See 05-15-39 Secondary 4th Gear Assembly Note.)
22	Tapered roller bearing (See 05-15-39 Tapered Roller Bearing Assembly Note.)
23	Clip
24	Tapered roller bearing (See 05-15-39 Tapered Roller Bearing Assembly Note.)

Middle Cone Ring Assembly Note

1. Assemble the middle cone ring so that the middle cone ring projection and the groove of the secondary 1st gear are engaged as shown in the figure.

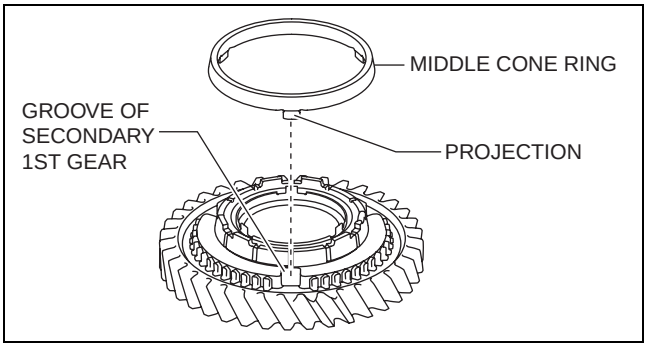

bc61um00000169

cardiagn.com

Synchronizer Ring (Secondary 1st Gear) Assembly Note

1. Assemble the synchronizer ring so that the synchronizer ring projection and the cavity of the inner cone ring are engaged as shown in the figure.
2. Verify that the ends of the inner cone ring, middle cone ring, and synchronizer ring are arranged in a flat plane.

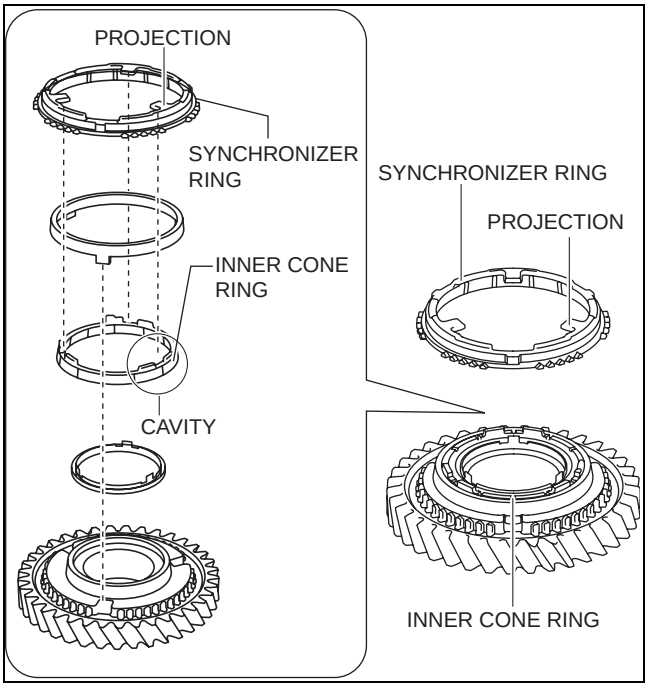

bc61um00000170

Clutch Hub Assembly Note

1. Assemble the clutch hub to the position shown in the figure while rotating the clutch hub in the rotation direction.

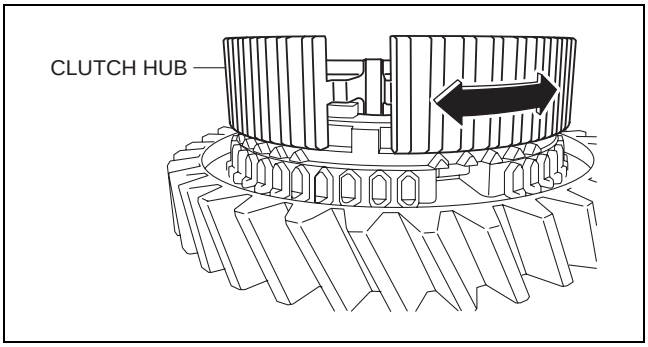

bc61um00000051

cardiagn.com

Caution

- **When assembling the clutch hub, it is necessary to engage the synchronizer ring projection, round groove of the clutch hub, and grooves of the friction damper and clutch hub. Therefore, rotate the clutch hub and engage it with each part.**

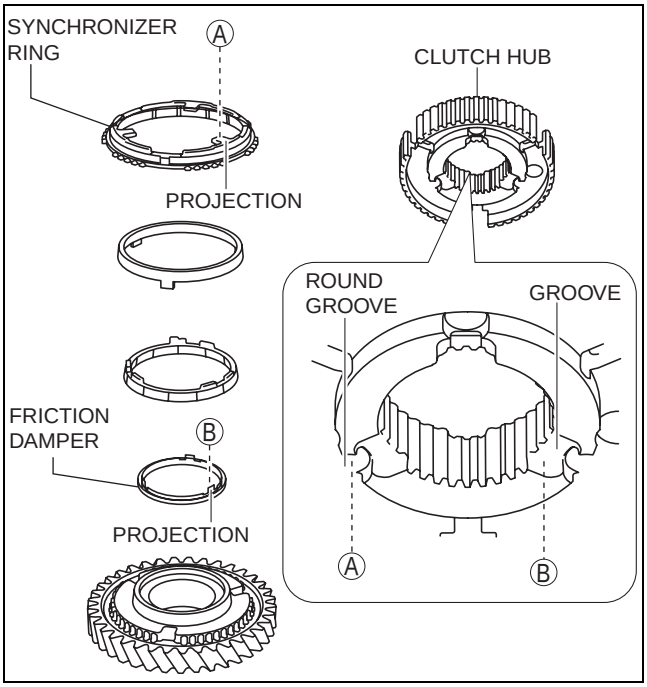

bc61um00000171

Gear Sleeve Assembly Note

1. Assemble the gear sleeve so that the gear sleeve projection and clutch hub groove are engaged as shown in the figure.

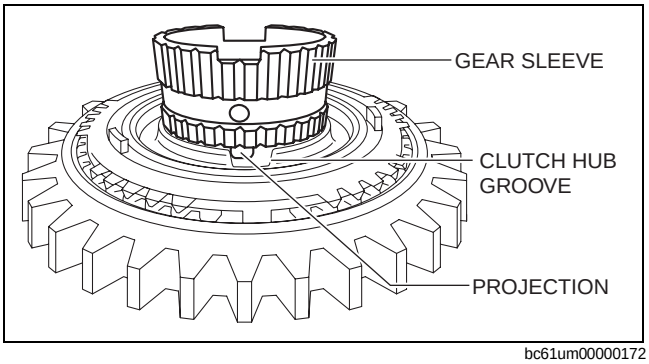

bc61um00000172

Secondary Shaft Assembly Note

1. Set the secondary shaft in a press as shown in the figure.

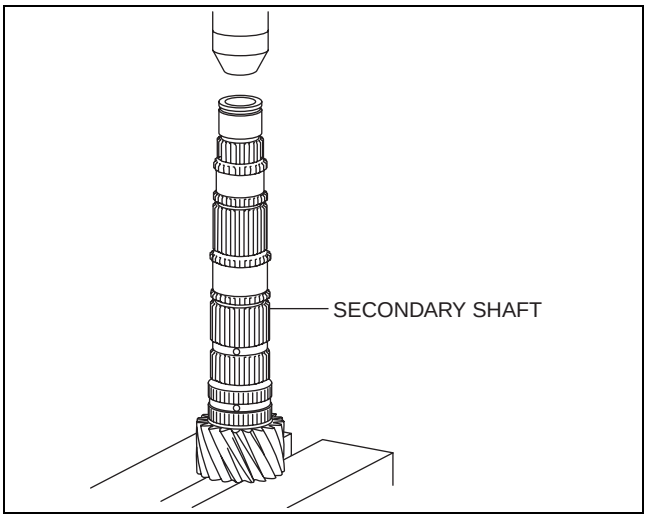

bc61um00000173

cardiagn.com

2. Set the secondary shaft with the parts from the secondary 1st gear to the gear sleeve as a single unit.

   Caution
   - **If you take your hand off the secondary 1st gear, it will fall off and the assembled parts will come apart. Therefore, until the assembled parts are press-fit to the secondary shaft, lift up and hold the secondary 1st gear so that each part does not come apart.**

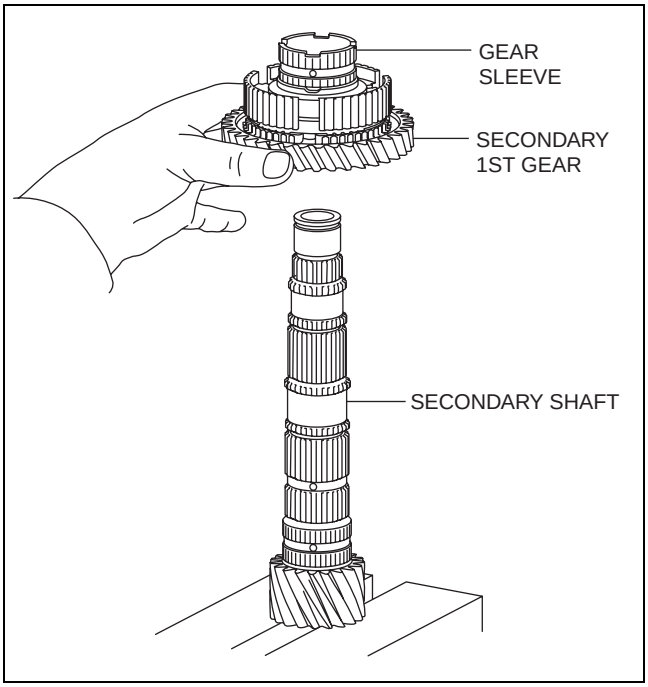

bc61um00000174

3. Set the gear sleeve to the **SST**.
4. Using a press, press-fit the parts from the secondary 1st gear to the gear sleeve to the secondary shaft.

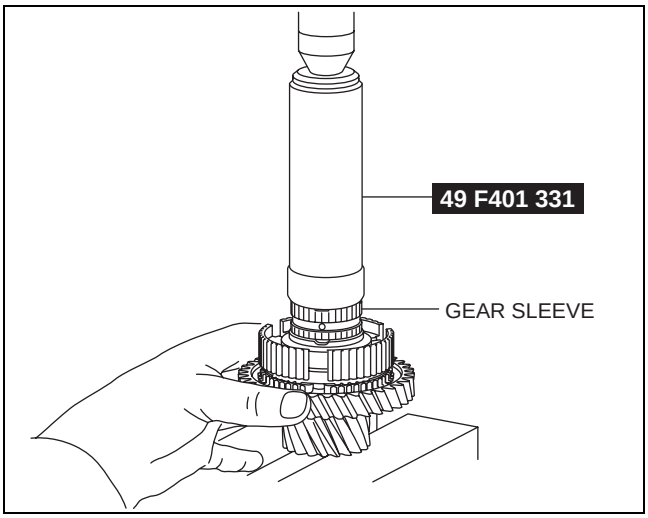

bc61um00000175

Clutch Hub Sleeve Assembly Note

1. Align the positioning groove of the clutch hub sleeve with the center of the clutch hub key groove as shown in the figure, and assemble the clutch hub sleeve.

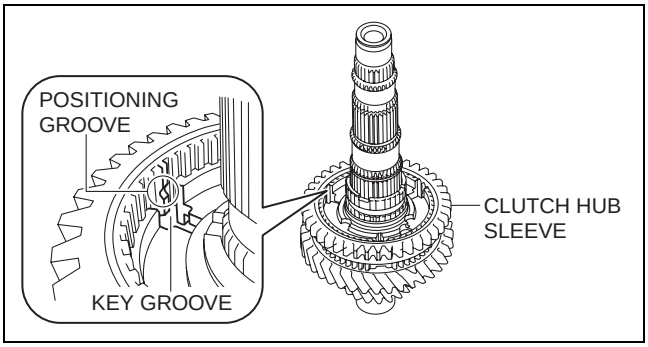

bc61um00000176

cardiagn.com

Synchronizer Key Assembly Note

1. Align with the direction of the synchronizer key as shown in the figure, and assemble the clutch hub.

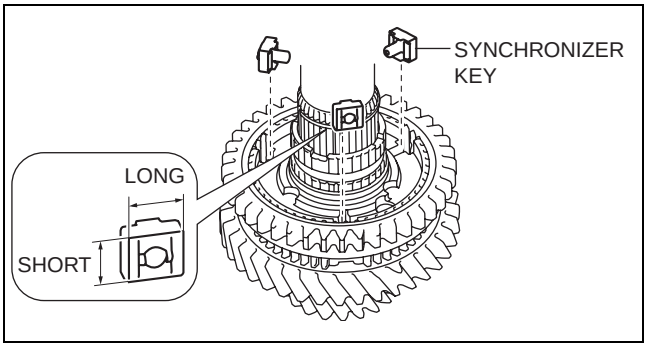

bc61um00000177

2. After the synchronizer key is assembled, verify that the detent ball of the synchronizer key is engaged with the positioning groove of the clutch hub sleeve.

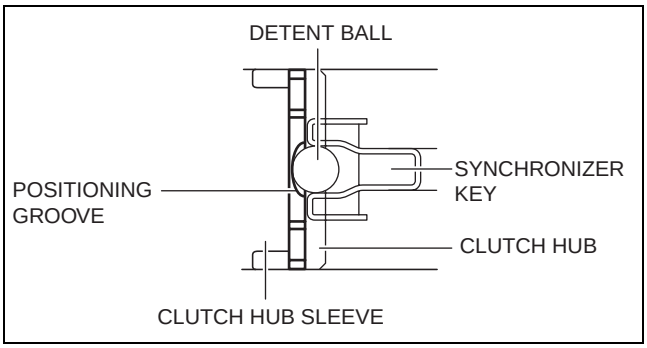

bc61um00000131

Synchronizer Ring (Secondary 2nd Gear) Assembly Note

1. Assemble the synchronizer ring so that the synchronizer ring projection and round groove of the clutch hub are engaged as shown in the figure.

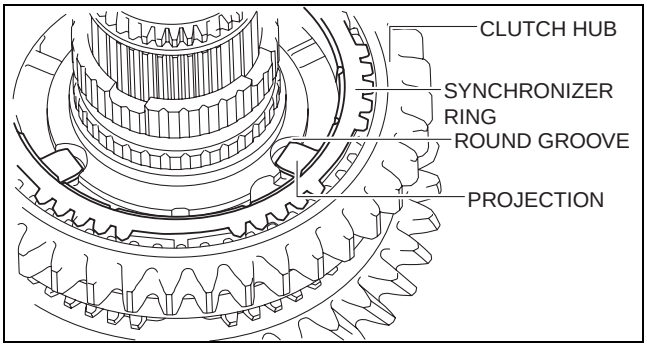

bc61um00000178

Secondary 2nd Gear Assembly Note

1. Verify that the ends of the inner cone ring, middle cone ring, and synchronizer ring are arranged in a flat plane.

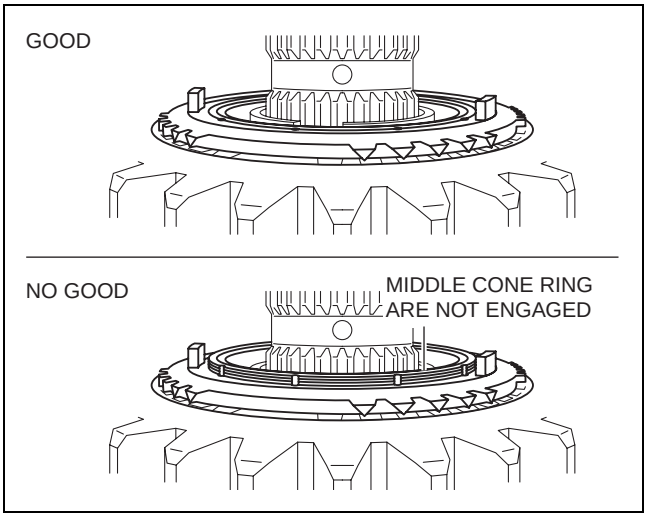

bc61um00000056

cardiagn.com

2. Assemble the secondary 2nd gear so that the groove of the secondary 2nd gear and middle cone ring projection are engaged as shown in the figure.

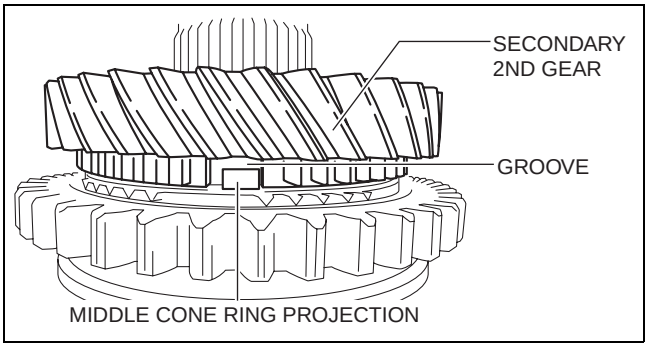

bc61um00000057

Friction Damper (Secondary 2nd Gear) Assembly Note

1. Assemble the friction damper so that the friction damper projection and the groove of the gear sleeve are engaged as shown in the figure.

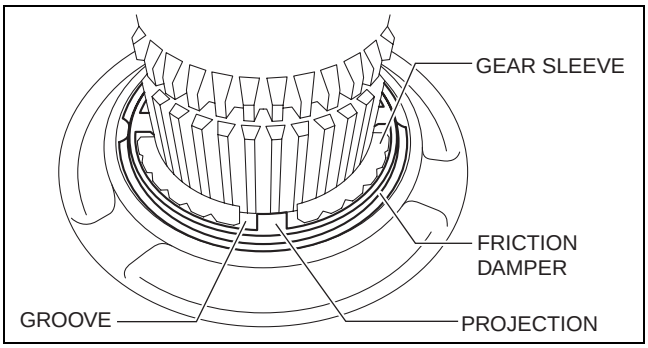

bc61um00000058

Secondary 5th Gear Assembly Note

1. Set the secondary shaft component, secondary 5th gear, and the **SST** in a press as shown in the figure.

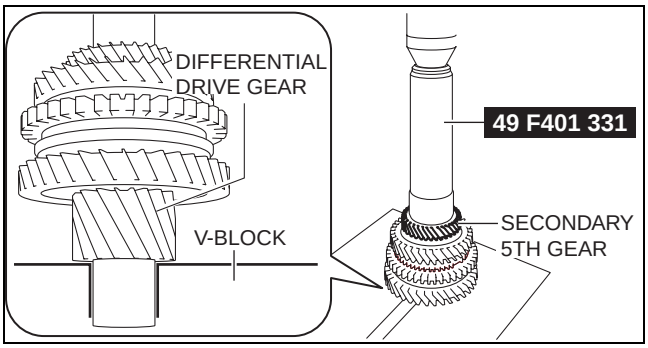

bc61um00000059

2. Move the clutch hub sleeve in the axial direction while pressing the secondary 2nd gear by hand so that it does not move, and verify that the synchronizer key is assembled correctly.
3. Assemble the secondary 5th gear using the press.

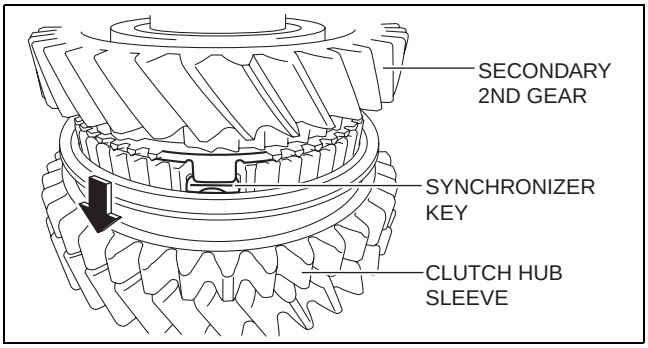

bc61um00000060

cardiagn.com

Secondary 6th Gear and Secondary 3rd Gear Assembly Note

1. Set the secondary shaft component, secondary 6th gear, and secondary 3rd gear in a press as shown in the figure.
2. Assemble the secondary 6th gear and secondary 3rd gear using the press.

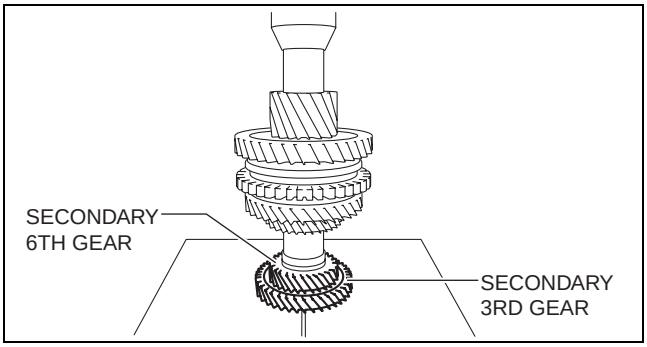

bc61um00000061

Secondary 4th Gear Assembly Note

1. Set the secondary shaft component and secondary 4th gear in a press as shown in the figure.
2. Assemble the secondary 4th gear using the press.

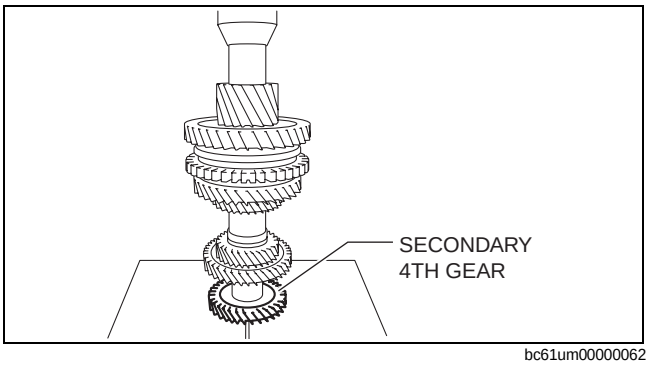

bc61um00000062

Tapered Roller Bearing Assembly Note

1. Set the secondary shaft component, new tapered roller bearing (transaxle case side), **SST**, and an appropriate steel plate in a press as shown in the figure.
2. Assemble the tapered roller bearing (transaxle case side) using the press.
3. Assemble a new clip.

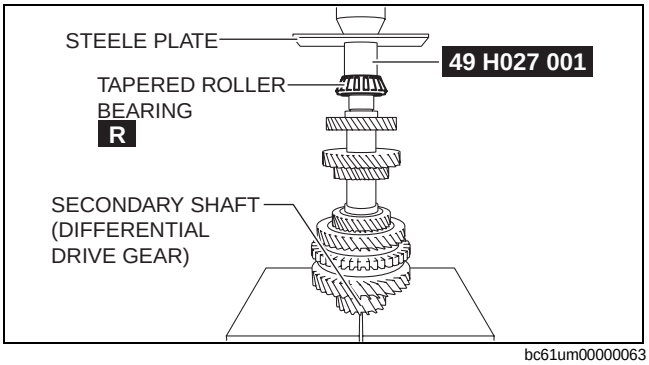

bc61um00000063

4. Set the secondary shaft component, new tapered roller bearing (clutch housing side), **SST**, and an appropriate steel plate in a press as shown in the figure.
5. Assemble the tapered roller bearing (clutch housing side) using the press.

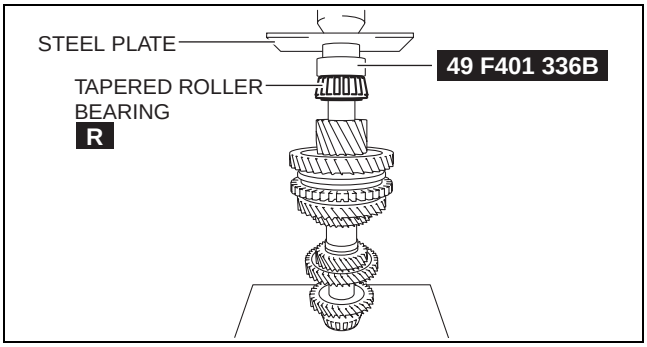

bc61um00000064

cardiagn.com

DIFFERENTIAL BACKLASH ADJUSTMENT

id051500169400

1. Secure the differential in a vice.

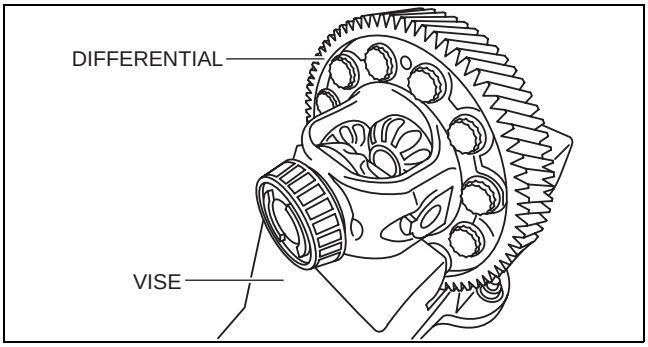

bc61um00000067

2. Assemble the drive shaft and the joint shaft to the differential.

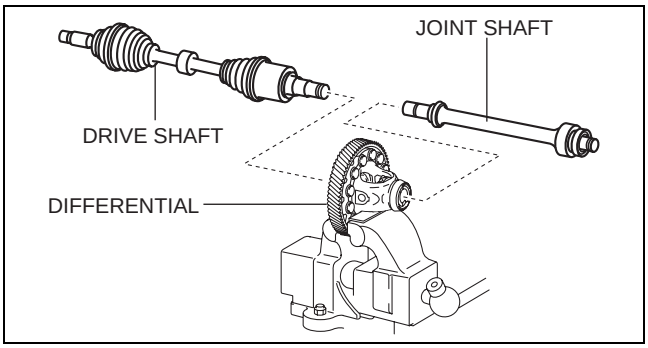

bc61um00000196

3. Set the dial gauge with the measuring probe attached perpendicularly to the area shown in the figure for the pinion gear.

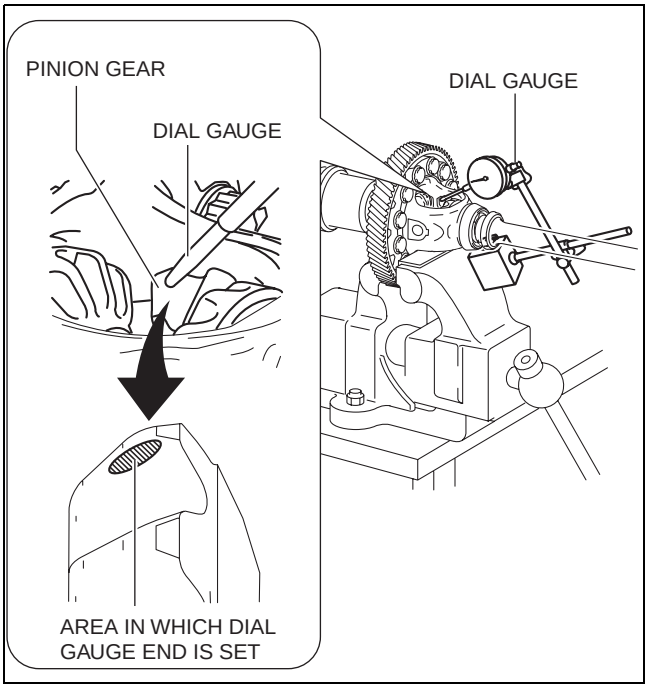

bc61um00000195

cardiagn.com

4. Measure the side gear on the joint shaft side and the pinion gear backlash using the following procedure:
   (1) Affix the side gear on the joint shaft side by hand.

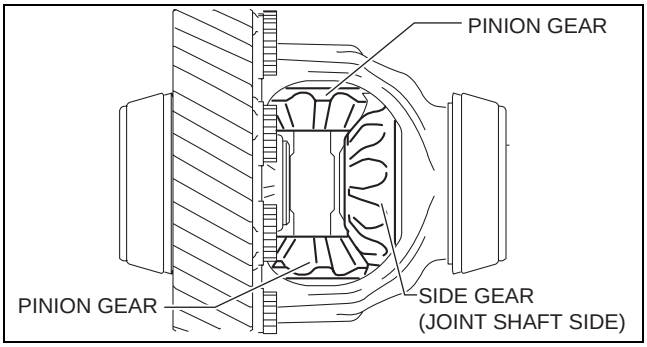

bc61um00000197

   (2) Measure the backlash by moving the pinion gear with the dial gauge that has been set and determine measured value A.

Caution
- **Because a difference occurs in the backlash measurement value if the secured side gear moves, move the pinion gear by hand so that the secured side gear does not move.**

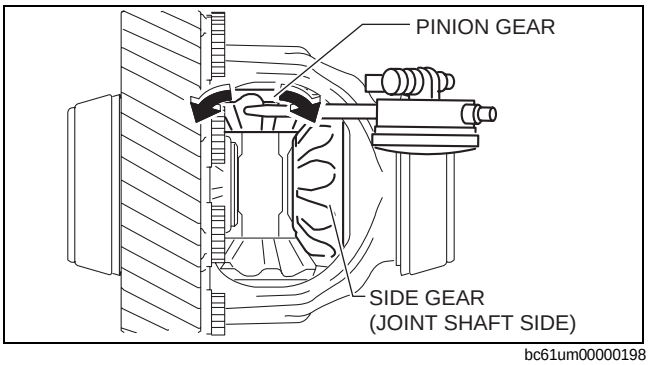

bc61um00000198

   (3) Measure the opposite of the pinion gear backlash in the same way as procedure 2 in Step 4 and determine measured value B.
   (4) Calculate the average value of measured values A and B using the following formula and determine the backlash measurement value on the joint shaft side of the pinion gear.
      - (Measured value A + measured value B)/2 = backlash measurement value on joint shaft side

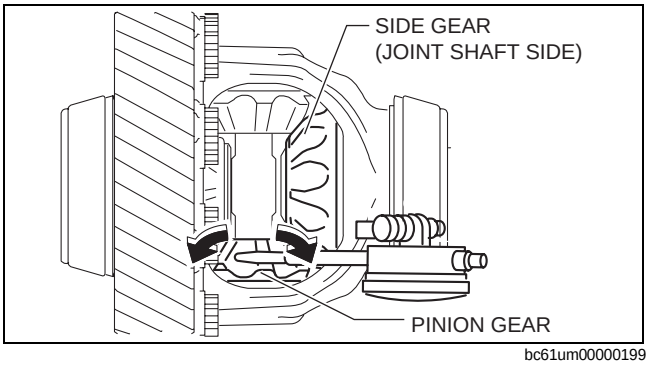

bc61um00000199

5. Measure the side gear on the drive shaft side and the pinion gear backlash using the following procedure:
   (1) Affix the side gear on the drive shaft side by hand.

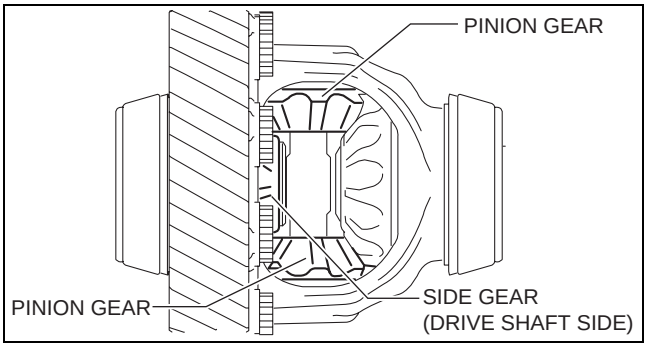

bc61um00000200

   (2) Measure the backlash by moving the pinion gear that the dial gauge has been set and determine measured value C.

Caution
- **Because a difference occurs in the backlash measurement value if the secured side gear moves, move the pinion gear by hand so that the secured side gear does not move.**

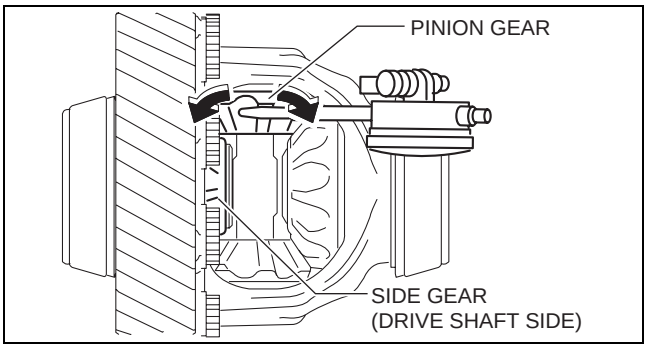

bc61um00000201

cardiagn.com

(3) Measure the opposite of the pinion gear backlash in the same way as procedure 2 in Step 5 and determine measured value D.
(4) Calculate the average value of measured values C and D using the following formula and determine the backlash measurement value on the drive shaft side of the pinion gear.
- (Measured value C + measured value D)/ 2 = backlash measurement value on drive shaft side

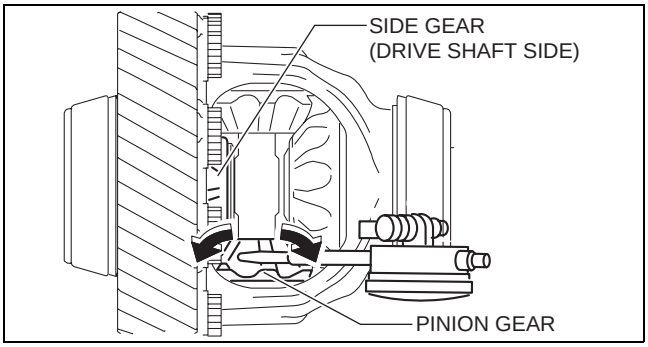

bc61um00000202

6. Verify that the backlash on the joint shaft and drive shaft sides is within the specification.

Differential pinion gear backlash
Specification: 0.05—0.15 mm {0.002—0.005 in}

- If the measured backlash for each is within the specification, the thrust washer thickness is the same as the removed one and there is no problem, therefore the "DIFFERENTIAL BACKLASH ADJUSUTMENT" procedure is finished.
- If not within the specification, perform "Thrust Washer Selection Calculation". (See 05-15-42 Thrust Washer Selection Calculation.)
- If it exceeds the specification even when a **0.95 mm {0.037 in}** thick thrust washer is used, replace the differential case.

Thrust Washer Selection Calculation

Note
- Perform the thrust washer selection calculation for each on the drive shaft and joint shaft sides.

1. Calculate the backlash gap by subtracting constant number A from backlash measurement value.
   - Constant number A = **0.090 mm {0.0035 in}**
   - Backlash measurement value - **0.090 mm {0.0035 in}** = backlash gap

   Calculation example
   - Backlash measurement value = 0.165 mm {0.00650 in}
   - **0.165 mm {0.00650 in}** - **0.090 mm {0.0035 in}** = **0.075 mm {0.0030 in}**
2. Calculate the thrust washer thickness gap by multiplying the backlash gap by constant number B.
   - Constant number B = **1.25 mm/mm {1.333 in/in}**
   - Backlash gap × **1.25 mm/mm {1.333 in/in}** = thrust washer thickness gap

   Calculation example
   - Backlash gap = **0.075 mm {0.0030 in}**
   - **0.075 mm {0.0030 in}** × **1.25 mm/mm {1.333 in/in}** = **0.094 mm {0.0037 in}**
3. Calculate the thrust washer thickness calculated value by adding the thrust washer thickness gap to the thickness of the thrust washer used in the measurement.
   - Thickness of thrust washer used in measurement + thrust washer thickness gap = thrust washer thickness calculated value

   Calculation example
   - Thickness of thrust washer used in measurement = **0.810 mm {0.8103 mm}**
   - Thrust washer thickness gap = **0.094 mm {0.0037 in}**
   - **0.810 mm {0.0319 in}** + **0.094 mm {0.0037 in}** = **0.904 mm {0.0356 in}**
4. Calculate the thrust washer thickness on the opposite side in the same way.
5. Based on each thrust washer thickness calculated value, select each thrust washer of the appropriate thickness.

Caution
- **Select the same thickness of the thrust washers on the drive shaft and joint shaft sides.However, if the measurement value cannot be adjusted within the specification, select the different thickness of the thrust washer.**

cardiagn.com

Thrust washer thickness calculated value		Appropriate thrust washer thickness (mm {in})
Equal to or more (mm {in})	Less than (mm {in})	
0.925 {0.0364}	1.025 {0.04035}	0.95 {0.037}
0.875 {0.0344}	0.925 {0.0364}	0.90 {0.035}
0.825 {0.0325}	0.875 {0.0344}	0.85 {0.033}
0.775 {0.0305}	0.825 {0.0325}	0.80 {0.031}
0.675 {0.0266}	0.775 {0.0305}	0.75 {0.030}

Selection example

- Because shim thickness calculated value **0.904 mm {0.0356 in}** applies to **0.875 mm {0.0344 in}** or more and less than **0.925 mm {0.0364 in}**, a shim of **0.90 mm {0.035 in}** thickness is selected.

Note

- Constant number A, **0.090 mm {0.0035 in}** is the backlash median value of the specification.
- The backlash gap is the difference between the backlash median value of the specification and the backlash measurement value.
- Constant number B is the thrust washer thickness which varies each time the backlash changes by **1.0 mm {0.039 in}**.Because the thrust washer thickness changes **0.1 mm {0.004 in}** when the backlash changes **0.08 mm {0.003 in}**, the quotient is **1.25 mm/mm {1.333 in/in}**.
- The thrust washer thickness gap is the difference between the thickness of the thrust washer used in the measurement and the thickness of an appropriate thrust washer.In the formula to calculate the thrust washer thickness gap, the thrust washer thickness gap is calculated by multiplying the backlash gap with constant number B.

DIFFERENTIAL DISASSEMBLY

id051500169500

1. Perform the “DIFFERENTIAL BACKLASH ADJUSTMENT”.(See 05-15-40 DIFFERENTIAL BACKLASH ADJUSTMENT.)
2. Disassemble the differential in the order shown in the figure.

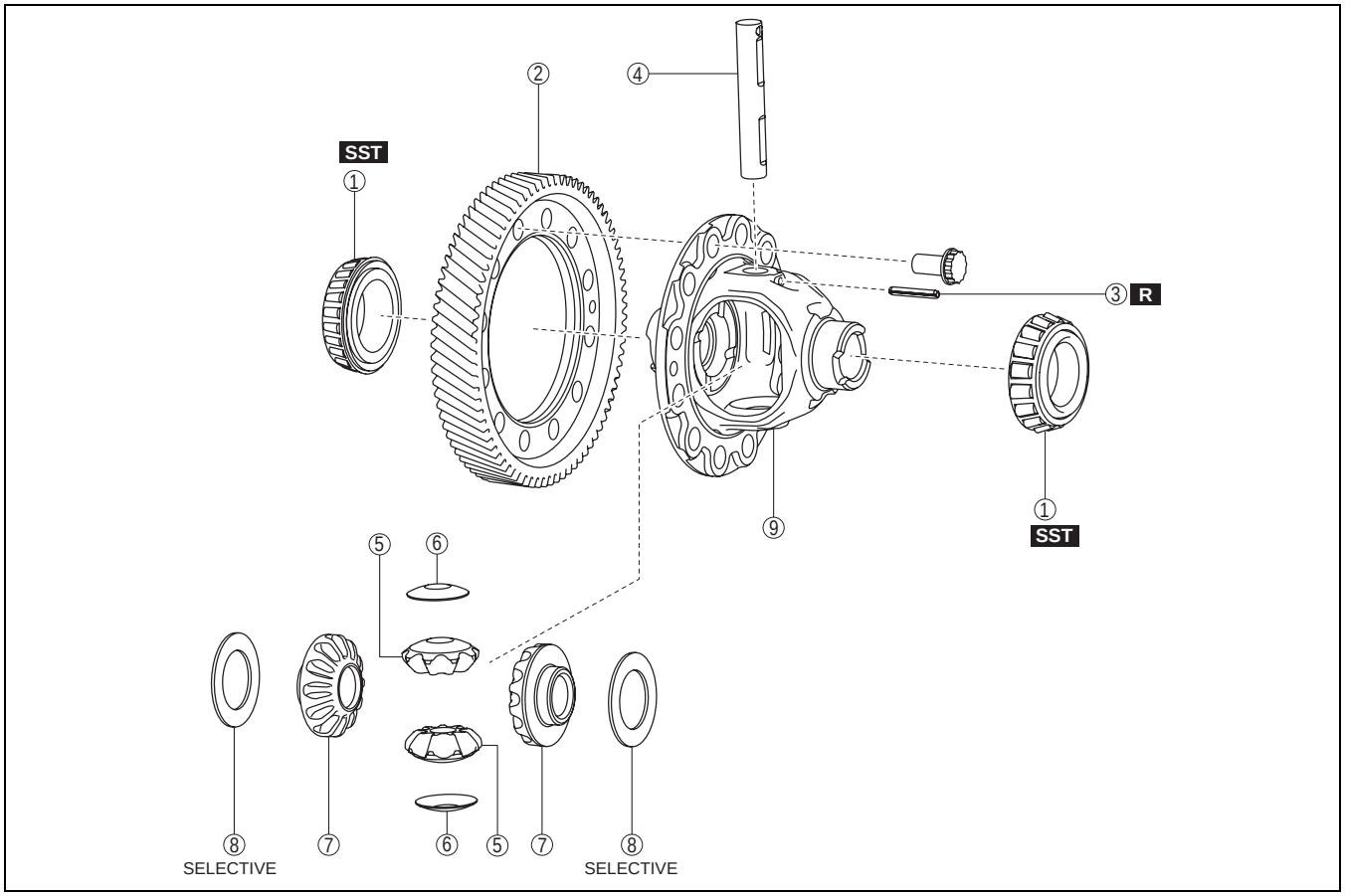

bc61um00000132

cardiagn.com

1	Tapered roller bearing (See 05-15-44 Tapered Roller Bearing Removal Note.)
2	Ring gear (See 05-15-44 Ring Gear Removal Note.)
3	Pin (See 05-15-45 Pin Removal Note.)
4	Pinion gear shaft
5	Pinion gear
6	Pinion gear shaft
7	Side gear
8	Thrust washer
9	Differential case

Tapered Roller Bearing Removal Note

1. Secure the differential in a vice.

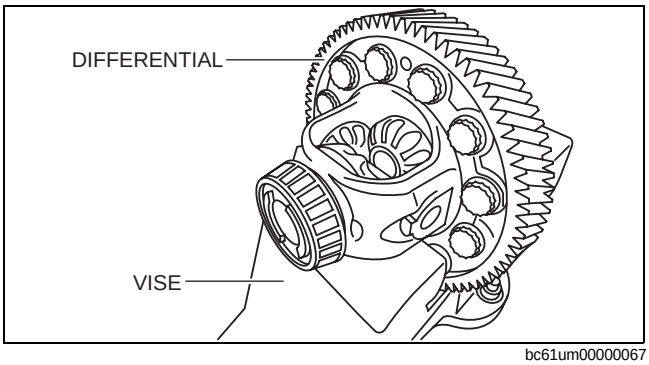

bc61um00000067

2. Remove the tapered roller bearing (clutch housing side) using the **SST**.

   Note
   - There is a groove in the differential case component for attaching the **SST** tab.

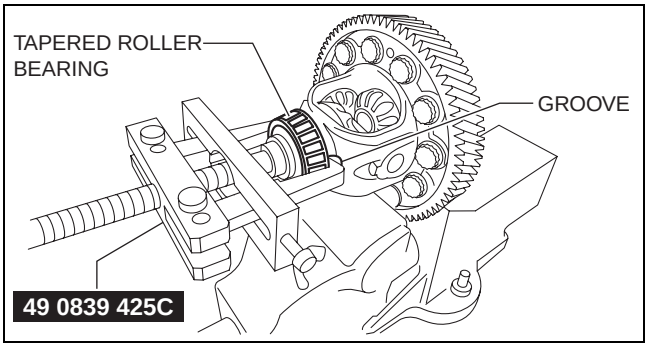

bc61um00000068

3. Using the **SST**, remove the tapered roller bearing (transaxle case side).

   Note
   - There is a groove in the differential case component for attaching the **SST** tab.

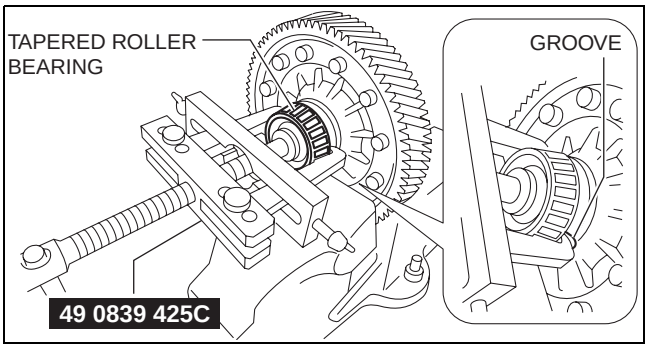

bc61um00000069

Ring Gear Removal Note

1. Secure the differential in a vice as shown in the figure.
2. Remove the ring gear bolts.
3. Tap the ring gear using a plastic hammer and remove the ring gear.

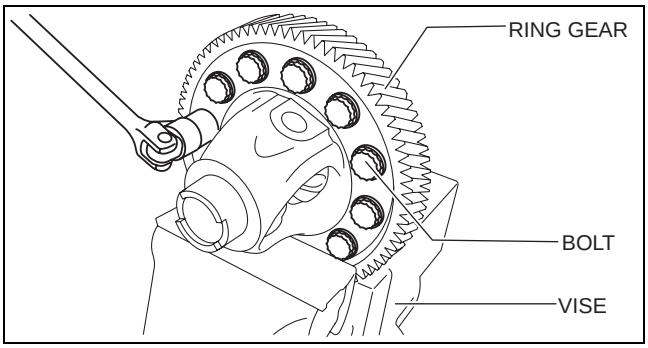

bc61um00000070

cardiagn.com

Pin Removal Note

1. Remove the pin using a punch.

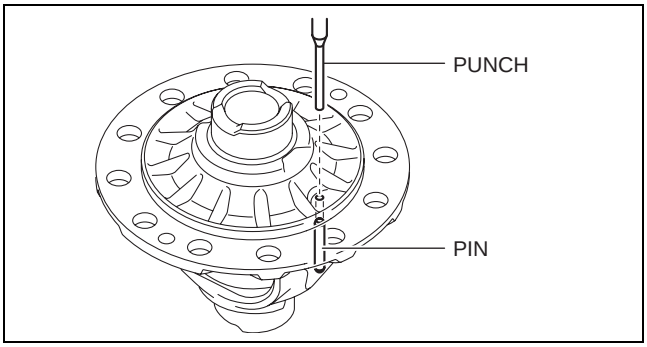

bc61um00000133

DIFFERENTIAL ASSEMBLY

id051500169600

1. Assemble the differential in the order shown in the figure.
2. Perform the “DIFFERENTIAL BACKLASH ADJUSTMENT”.(See 05-15-40 DIFFERENTIAL BACKLASH ADJUSTMENT.)

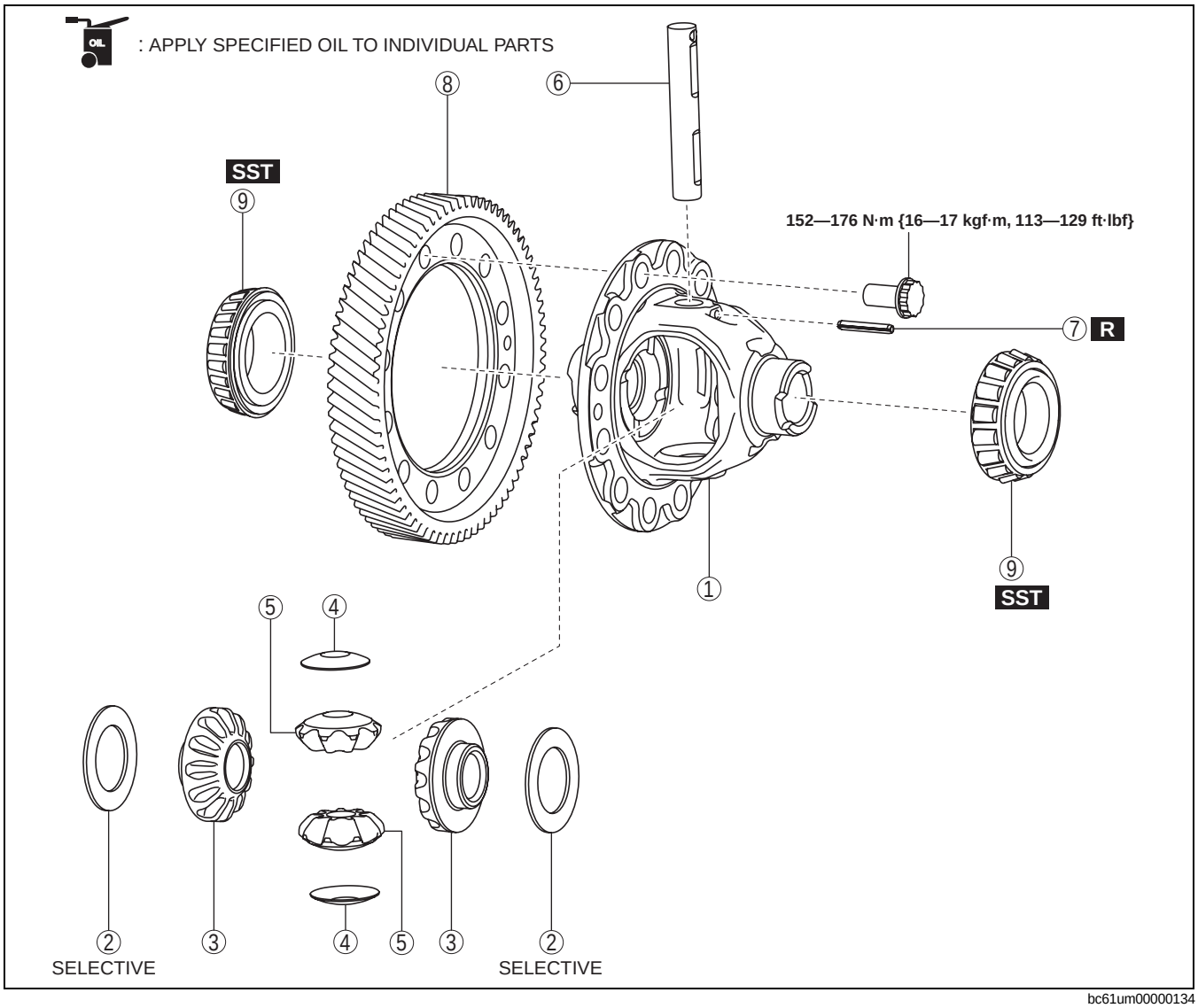

bc61um00000134

1	Differential case
2	Thrust washer
3	Side gear
4	Thrust washer
5	Pinion gear

6	Pinion gear shaft
7	Pin (See 05-15-46 Pin Assembly Note.)
8	Ring gear (See 05-15-46 Ring Gear Assembly Note.)

cardiagn.com

9	Tapered roller bearing (See 05-15-46 Ring Gear Assembly Note.)

Pin Assembly Note

1. Install a new pin as shown in the figure to hold the pinion gear shaft.

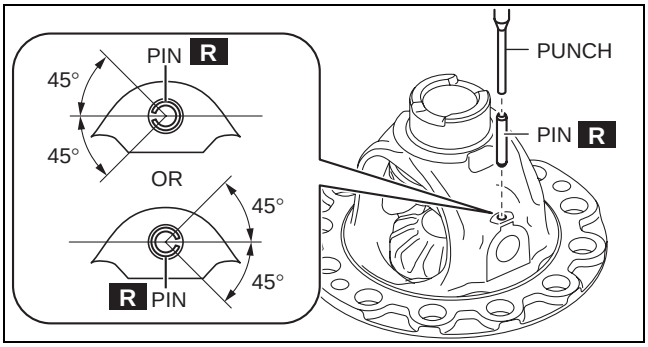

bc61um00000135

Ring Gear Assembly Note

1. Assemble the ring gear so that the differential holes and ring gear holes shown in the figure are aligned.

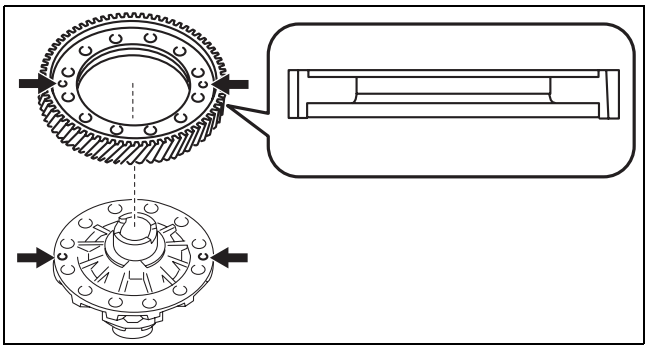

azzjjw00001001

2. Secure the differential in a vice.
3. Install the ring gear by tightening the ring gear installation bolts in several passes.

   Tightening torque
   152—176 N·m {16—17 kgf·m, 113—129 ft·lbf}

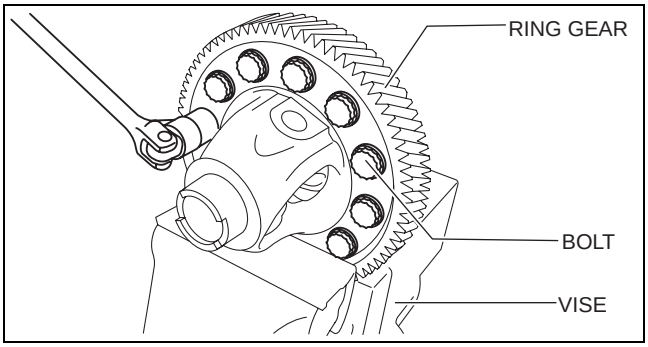

bc61um00000070

cardiagn.com

Tapered Roller Bearing Installation Note

1. Set the differential, the tapered roller bearing (clutch housing side), **SST**, and an appropriate steel plate in a press as shown in the figure.
2. Assemble the tapered roller bearing (clutch housing side) using the press.

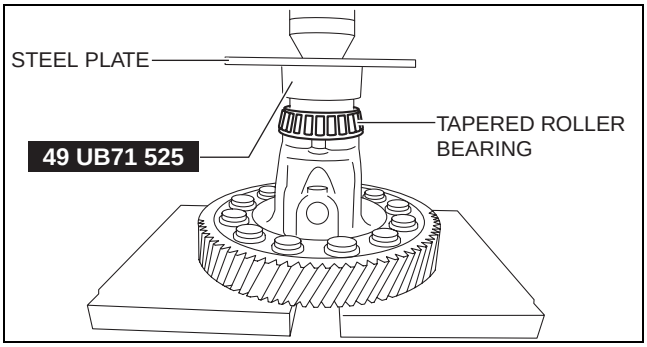

bc61um00000074

3. Set the differential, the tapered roller bearing (transaxle case side), **SST**, and an appropriate steel plate to the press as shown in the figure.
4. Assemble the tapered roller bearing (transaxle case side) using the press.

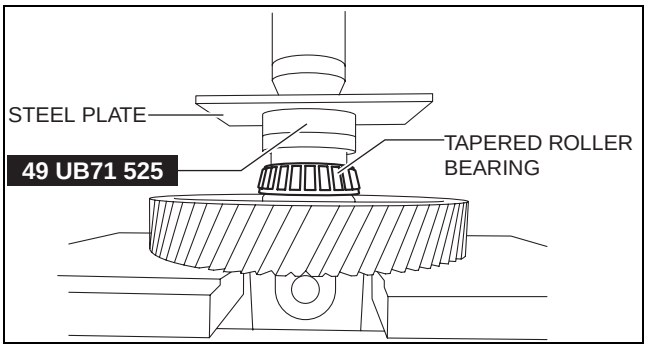

bc61um00000075

BEARING PRELOAD ADJUSTMENT

id051500169700

Primary Shaft Preload Adjustment

1. Measure the thickness of the straight edge which is used for measurements.
2. Measure distance A of the transaxle case using the following procedure.

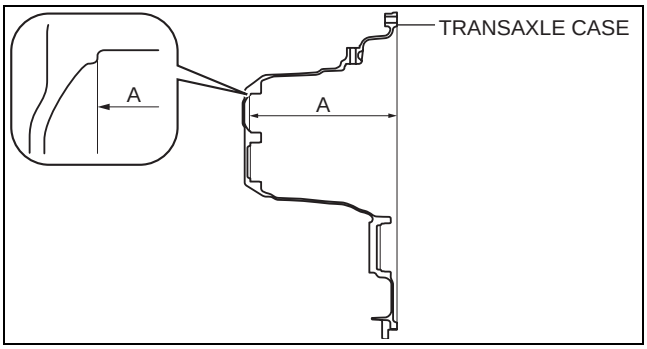

bc61um00000083

(1) Place two straight edges on the transaxle case as shown in the figure.

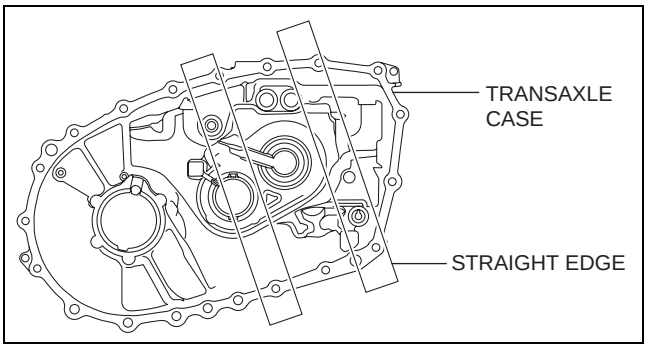

bc61um00000179

cardiagn.com

(2) Set up 3 measurement points of your choosing on the shim assembly area of the transaxle case as shown in the figure.
(3) Using a commercially available depth gauge, measure the distance to each measurement point from the straight edge.

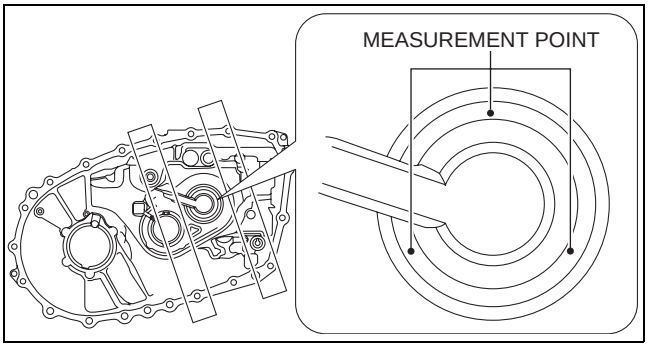

bc61um00000180

Caution
- **When measuring the distance to the measurement point from the straight edge, do not allow the depth gauge head to contact the shim assembly area.**

(4) Calculate the average value measured in Step 3 using the following formula.
- (Value of first measurement + value of second measurement + value of third measurement) / 3 = Average measured values.

Calculation example
- Value of first measurement = **224.380 mm {8.83386 in}**
- Value of second measurement = **224.381 mm {8.83390 in}**
- Value of third measurement = **224.379 mm {8.83382 in}**
- (**224.380 mm {8.83386 in}** + **224.381 mm {8.83390 in}** + **224.379 mm {8.83382 in}**) / 3 = **224.380 mm {8.83386 in}**

(5) Calculate distance A of the transaxle case using the following formula.
- Average of measured values - straight edge thickness = Distance A

Calculation example
- Straight edge thickness = **5.000 mm {0.1969 in}**
- Average of measured values = **224.380 mm {8.83386 in}**
- **224.380 mm {8.83386 in}** - **5.000 mm {0.1969 in}** = **219.380 mm {8.63701 in}**

3. Measure distance B of the transaxle case using the following procedure.

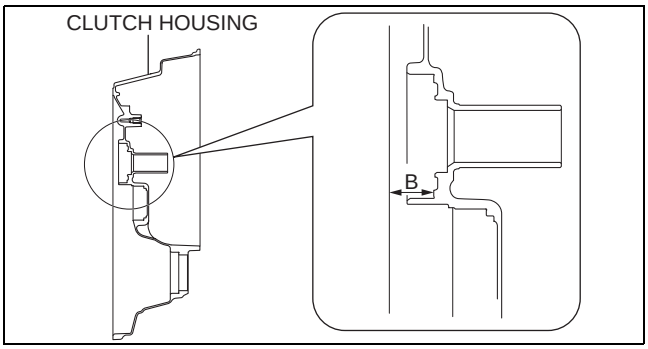

bc61um00000181

(1) Set two straight edges on the clutch housing as shown in the figure.

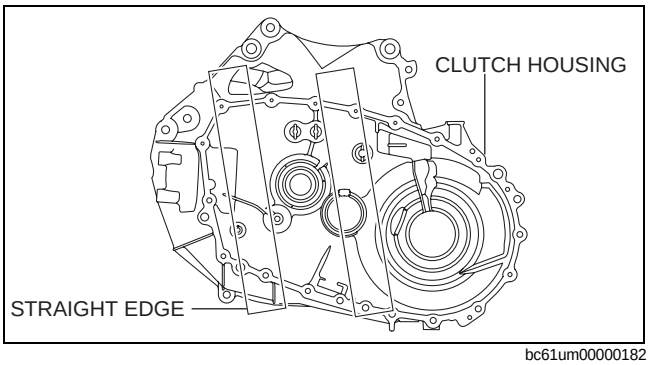

bc61um00000182

cardiagn.com

(2) Set up 3 measurement points of your choosing on the ball bearing assembly area of the clutch housing as shown in the figure.
(3) Using a commercially available depth gauge, measure the distance to each measurement point from the straight edge.

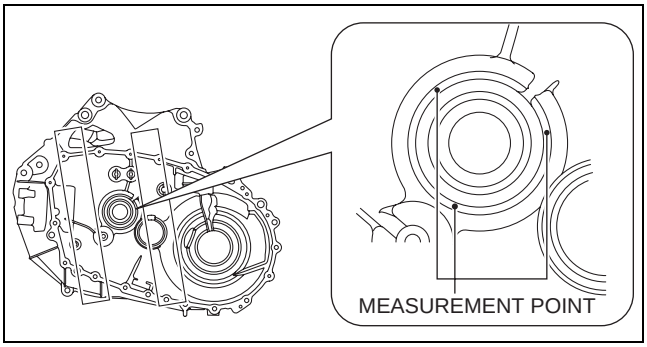

bc61um00000183

Caution
- **When measuring the distance to the measurement points from the straight edge, do not allow the depth gauge head to contact the ball bearing assembly area.**

(4) Calculate the average value measured in Step 3 using the following formula.
- (Value of first measurement + value of second measurement + value of third measurement) / 3 = Average measured values.

Calculation example
- Value of first measurement = **30.575 mm {1.2037 in}**
- Value of second measurement = **30.577 mm {1.2038 in}**
- Value of third measurement = **30.577 mm {1.2038 in}**
- (**30.575 mm {1.2037 in}** + **30.577 mm {1.2038 in}** + **30.577 mm {1.2038 in}**) / 3 = **30.576 mm {1.2038 in}**

(5) Calculate distance B of the clutch housing using the following formula.
- Average of measured values - straight edge thickness = Distance B

Calculation example
- Straight edge thickness = **5.000 mm {0.1969 in}**
- Average of measured values = **30.576 mm {1.2038 in}**
- **30.576 mm {1.2038 in}** - **5.000 mm {0.1969 in}** = **25.576 mm {1.0069 in}**

4. Measure distance C of the primary shaft component using the following procedure.

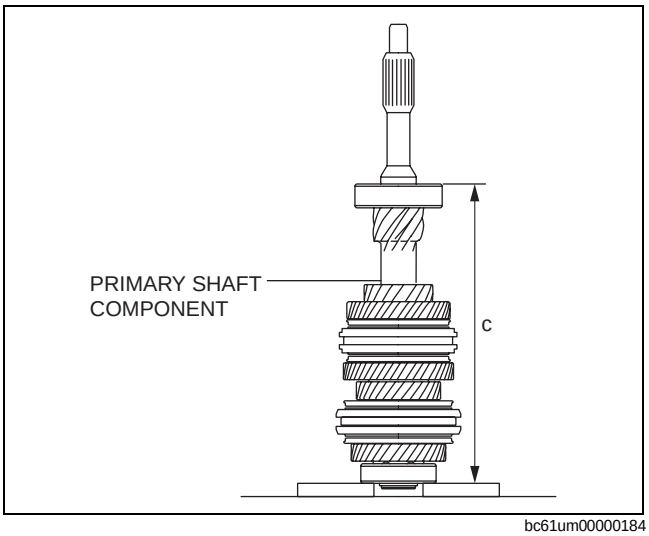

bc61um00000184

cardiagn.com

(1) Place two straight edges on the surface plate as shown in the figure and set the primary shaft component on top of them.

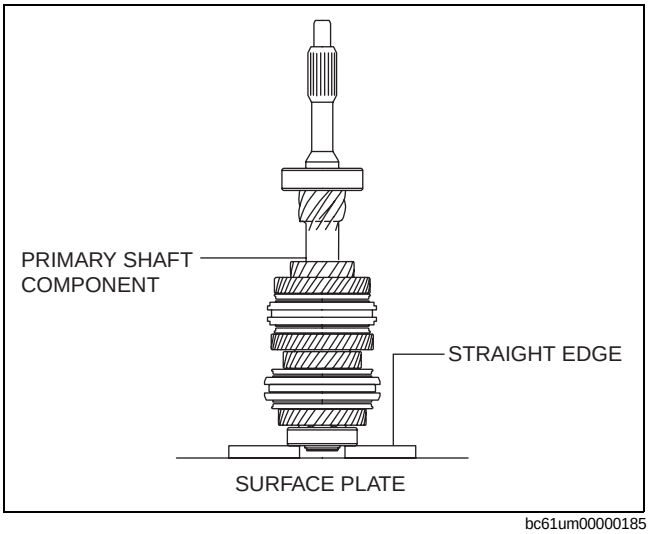

bc61um00000185

(2) Set up 3 measurement points of your choosing on the ball bearing as shown in the figure.
(3) Using a commercially available height gauge, measure the distance to each measurement point from the straight edge.
(4) Calculate the average of the value measured in Step 3 using the following formula, and use the average of the measured value for distance C of the primary shaft component.
   - (Value of first measurement + value of second measurement + value of third measurement) / 3 = Distance C

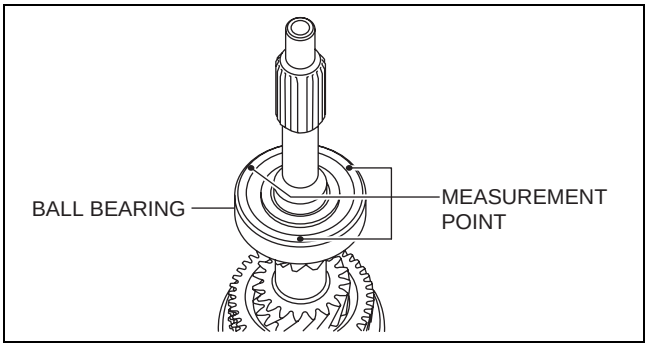

bc61um00000186

Calculation example
- Value of first measurement = **243.591 mm {9.59020 in}**
- Value of second measurement = **243.592 mm {9.59024 in}**
- Value of third measurement = **243.593 mm {9.59028 in}**
- (**243.591 mm {9.59020 in}** + **243.592 mm {9.59024 in}** + **243.593 mm {9.59028 in}**) / 3 = **243.592 mm {9.59024 in}**

5. Select the primary shaft shim using the following procedure.
   (1) Calculate the clearance (clearance D) between the transaxle case and the primary shaft component using the following formula.
   - Distance A + Distance B - Distance C = Clearance D

   Calculation example
   - Distance A = **219.380 mm {8.63701 in}**
   - Distance B = **25.576 mm {1.0069 in}**
   - Distance C = **243.592 mm {9.59024 in}**
   - **219.380 mm {8.63701 in}** + **25.576 mm {1.0069 in}** - **243.592 mm {9.59024 in}** = **1.364 mm {0.05370 in}**

cardiagn.com

(2) Based on the calculated clearance D, select a shim of the appropriate thickness from the following table.

Clearance D measured value		Appropriate shim thickness (mm {in})
Equal to or more (mm {in})	Less than (mm {in})	
1.570 {0.06181}	1.610 {0.06339}	1.550 {0.06102}
1.520 {0.05984}	1.570 {0.06181}	1.500 {0.05906}
1.470 {0.05787}	1.520 {0.05984}	1.450 {0.05709}
1.420 {0.05591}	1.470 {0.05787}	1.400 {0.05512}
1.370 {0.05394}	1.420 {0.05591}	1.350 {0.05315}
1.320 {0.05197}	1.370 {0.05394}	1.300 {0.05118}
1.270 {0.050}	1.320 {0.05197}	1.250 {0.04921}
1.220 {0.04803}	1.270 {0.050}	1.200 {0.04724}
1.170 {0.04606}	1.220 {0.04803}	1.150 {0.04528}
1.120 {0.04409}	1.170 {0.04606}	1.100 {0.04331}
1.070 {0.04213}	1.120 {0.04409}	1.050 {0.04134}
1.020 {0.04016}	1.070 {0.04213}	1.000 {0.03937}
0.970 {0.0382}	1.020 {0.04016}	0.950 {0.0374}
0.920 {0.0362}	0.970 {0.0382}	0.900 {0.0354}
0.870 {0.0343}	0.920 {0.0362}	0.850 {0.0335}
0.820 {0.0323}	0.870 {0.0343}	0.800 {0.0315}
0.770 {0.0303}	0.820 {0.0323}	0.750 {0.0295}
0.720 {0.0283}	0.770 {0.0303}	0.700 {0.0276}
0.680 {0.0268}	0.720 {0.0283}	0.650 {0.0256}

Selection example

- Because clearance D **1.364 mm {0.05370 in}** applies to **1.320 mm {0.05197 in}** or more and less than **1.370 mm {0.05394 in}**, a shim of **1.300 {0.05118}** thickness is selected.

Secondary Shaft Preload Adjustment

1. Measure the thickness of the straight edge which is used for measurements.
2. Measure distance E of the transaxle case using the following procedure.

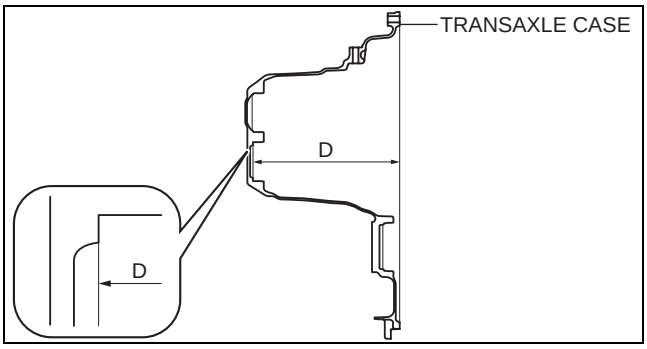

bc61um00000085

(1) Place two straight edges on the transaxle case as shown in the figure.

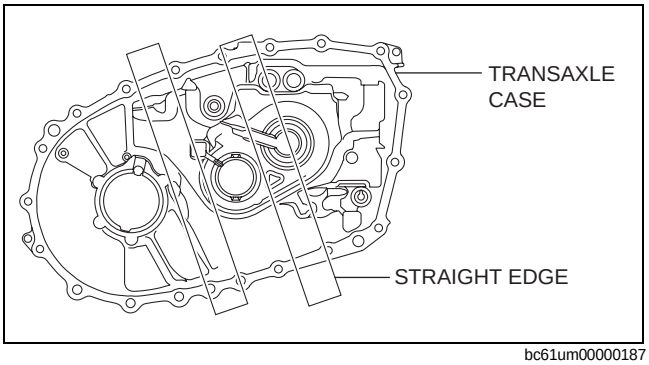

bc61um00000187

cardiagn.com

(2) Set up 3 measurement points of your choosing on the shim assembly area of the transaxle case as shown in the figure.
(3) Using a commercially available depth gauge, measure the distance to each measurement point from the straight edge.

Caution
- **When measuring the distance to the measurement point from the straight edge, do not allow the depth gauge head to contact the shim assembly area.**

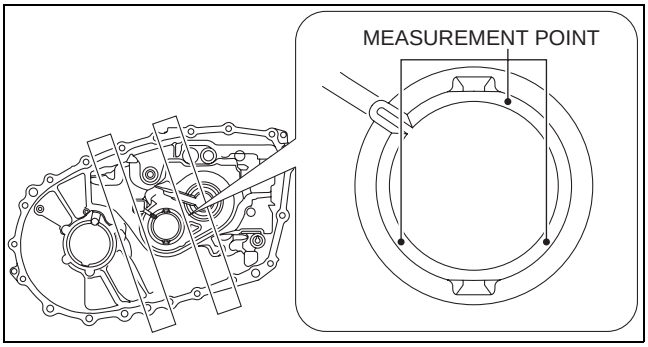

bc61um00000188

(4) Calculate the average value measured in Step 3 using the following formula.
- (Value of first measurement + value of second measurement + value of third measurement) / 3 = Average measured values.

Calculation example
- Value of first measurement = **223.223 mm {8.78831 in}**
- Value of second measurement = **223.219 mm {8.78815 in}**
- Value of third measurement = **223.222 mm {8.78827 in}**
- (**223.223 mm {8.78831 in}** + **223.219 mm {8.78815 in}** + **223.222 mm {8.78827 in}**) / 3 = **223.221 mm {8.78823 in}**

(5) Calculate distance E of the transaxle case using the following formula.
- Average of measured values - straight edge thickness = Distance E

Calculation example
- Straight edge thickness = **5.000 mm {0.1969 in}**
- Average of measured values = **223.221 mm {8.78823 in}**
- **223.221 mm {8.78823 in}** - **5.000 mm {0.1969 in}** = **218.221 mm {8.59138 in}**

3. Measure distance F of the transaxle case using the following procedure.

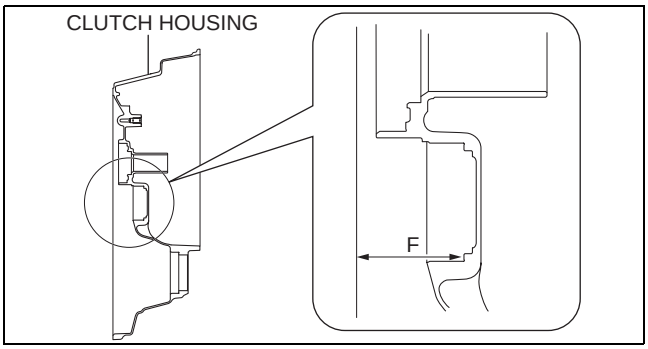

bc61um00000189

(1) Set two straight edges on the clutch housing as shown in the figure.

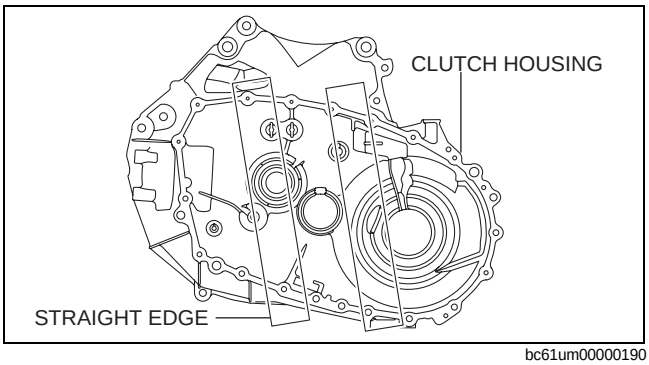

bc61um00000190

cardiagn.com

(2) Set up 3 measurement points of your choosing on the ball bearing assembly area of the clutch housing as shown in the figure.
(3) Using a commercially available depth gauge, measure the distance to each measurement point from the straight edge.

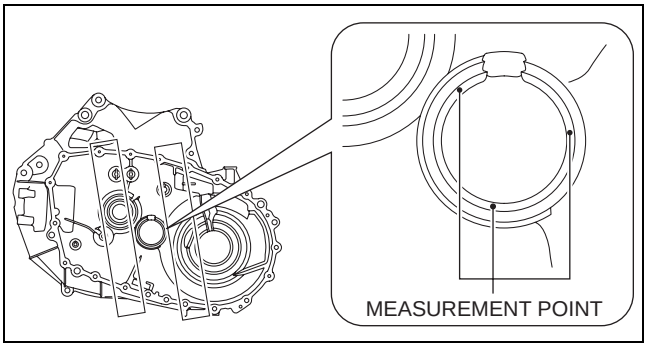

bc61um00000191

Caution
- **When measuring the distance to the measurement point from the straight edge, do not allow the depth gauge head to contact the bearing outer race assembly area.**

(4) Calculate the average value measured in Step 3 using the following formula.
- (Value of first measurement + value of second measurement + value of third measurement) / 3 = Average measured values.

Calculation example
- Value of first measurement = **61.154 mm {2.4076 in}**
- Value of second measurement = **61.153 mm {2.4076 in}**
- Value of third measurement = **61.153 mm {2.4076 in}**
- (**61.154 mm {2.4076 in}** + **61.153 mm {2.4076 in}** + **61.153 mm {2.4076 in}**) / 3 = **61.153 mm {2.4076 in}**

(5) Calculate distance F of the clutch housing using the following formula.
- Average of measured values - straight edge thickness = Distance F

Calculation example
- Straight edge thickness = **5.000 mm {0.1969 in}**
- Average of measured values = **61.153 mm {2.4076 in}**
- **61.153 mm {2.4076 in}** - **5.000 mm {0.1969 in}** = **56.153 mm {2.2107 in}**

4. Measure distance G of the secondary shaft component using the following procedure.

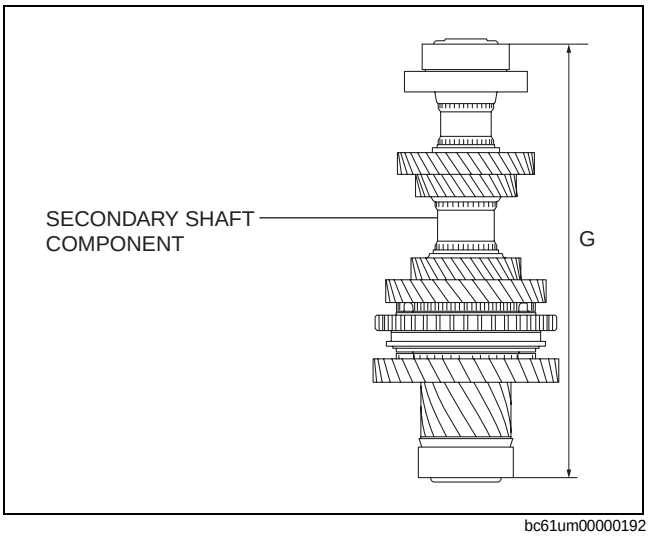

bc61um00000192

cardiagn.com

(1) Place two straight edges on the surface plate as shown in the figure and set the bearing outer race and secondary shaft component on top of them.
(2) Rotate the secondary shaft component to its rotational direction to engage the taper roller bearing and the bearing outer race assembled to the clutch housing smoothly.

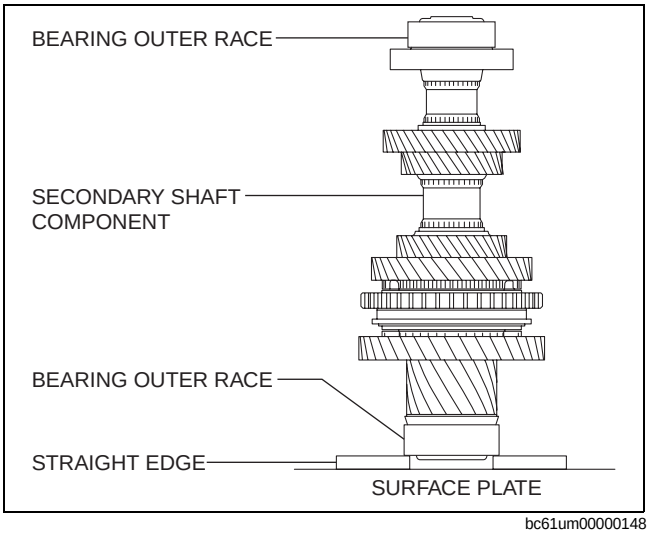

bc61um00000148

(3) Set up 3 measurement points of your choosing on the bearing outer race as shown in the figure.
(4) Using a commercially available height gauge, measure the distance to each measurement point from the straight edge.
(5) Calculate the average of the value measured in Step 4 using the following formula, and use the average of the measured value for distance G of the secondary shaft component.
   - (Value of first measurement + value of second measurement + value of third measurement) / 3 = Distance G

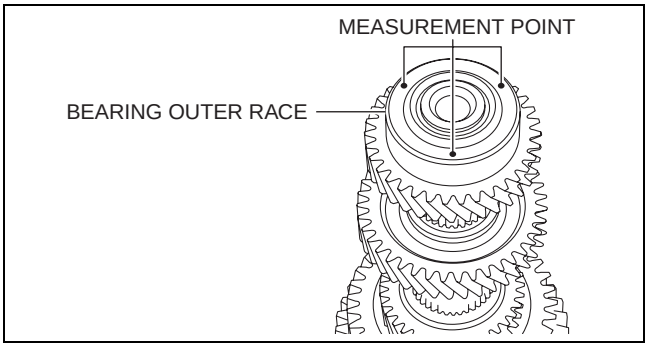

bc61um00000193

Calculation example
- Value of first measurement = **273.274 mm {10.7588 in}**
- Value of second measurement = **273.270 mm {10.7587 in}**
- Value of third measurement = **273.273 mm {10.7588 in}**
- (**273.274 mm {10.7588 in}** + **273.270 mm {10.7587 in}** + **273.273 mm {10.7588 in}**) / 3 = **273.272 mm {10.7587 in}**

5. Select the secondary shaft shim using the following procedure.
   (1) Calculate the clearance (clearance H) between the transaxle case and the primary shaft component using the following formula.
   - Distance E + Distance F - Distance G = Clearance H

   Calculation example
   - Distance E = **218.221 mm {8.59138 in}**
   - Distance F = **56.153 mm {2.2107 in}**
   - Distance G = **273.272 mm {10.7587 in}**
   - **218.221 mm {8.59138 in}** + **56.153 mm {2.2107 in}** - **273.272 mm {10.7587 in}** = **1.102 mm {0.04339 in}**

cardiagn.com

(2) Based on the calculated clearance H, select a shim of the appropriate thickness from the following table.

Clearance H measured value		Appropriate shim thickness (mm {in})
Equal to or more (mm {in})	Less than (mm {in})	
1.331 {0.05240}	1.355 {0.05335}	1.500 {0.05906}
1.281 {0.05043}	1.331 {0.05240}	1.450 {0.05709}
1.231 {0.04846}	1.281 {0.05043}	1.400 {0.05512}
1.181 {0.04650}	1.231 {0.04846}	1.350 {0.05315}
1.131 {0.04453}	1.181 {0.04650}	1.300 {0.05118}
1.081 {0.04256}	1.131 {0.04453}	1.250 {0.04921}
1.031 {0.04059}	1.081 {0.04256}	1.200 {0.04724}
0.981 {0.0386}	1.031 {0.04059}	1.150 {0.04528}
0.931 {0.0367}	0.981 {0.0386}	1.100 {0.04331}
0.881 {0.0347}	0.931 {0.0367}	1.050 {0.04134}
0.831 {0.0327}	0.881 {0.0347}	1.000 {0.03937}
0.781 {0.0307}	0.831 {0.0327}	0.950 {0.0374}
0.731 {0.0288}	0.781 {0.0307}	0.900 {0.0354}
0.681 {0.0268}	0.731 {0.0288}	0.850 {0.0335}
0.631 {0.0248}	0.681 {0.0268}	0.800 {0.0315}
0.581 {0.0229}	0.631 {0.0248}	0.750 {0.0295}
0.531 {0.0209}	0.581 {0.0229}	0.700 {0.0276}
0.495 {0.0195}	0.531 {0.0209}	0.650 {0.0256}

Selection example

- Because clearance H **1.102 mm {0.04339 in}** applies to **1.081 {0.04256}** or more and less than **1.131 {0.04453}**, a shim of **1.250 {0.04921}** thickness is selected.

Differential Preload Adjustment

1. Assemble a new shim of the same thickness as the removed shim.

   Caution
   - **Preload cannot be measured accurately if the shim is reused. An used shim is deformed by the pressure applied during assembly.**

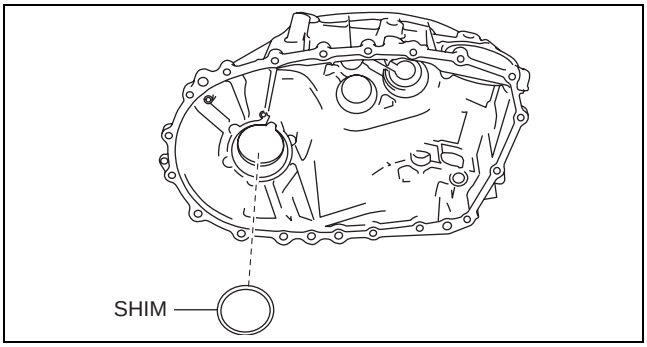

bc61um00000150

2. Assemble the bearing outer race to the transaxle case using the **SST**s.

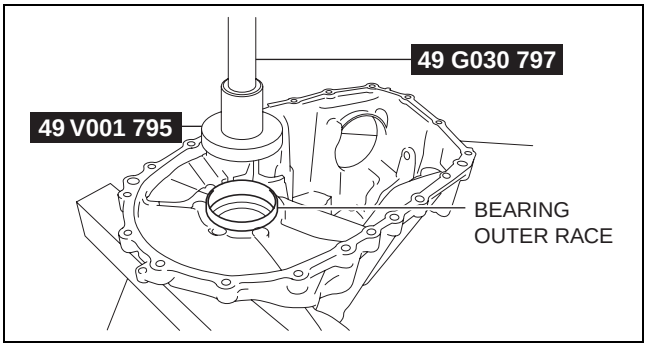

bc61um00000149

cardiagn.com

3. Assemble the bearing outer race to the clutch housing using the **SST**s.

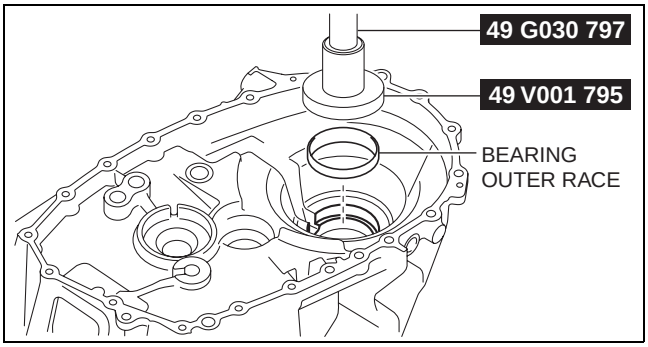

bc61um00000151

4. Assemble the **SST** to the clutch housing.

   Bolt A
   Part No.: 99450 1055 or M10×1.25 length 55 mm {2.2 in}, and nut (M10×1.25)
   Bolt A tightening torque
   38—52 N·m {3.9—5.3 kgf·m, 29—38 ft·lbf}
   Bolt B
   SST (49 G019 033 part of 49 G019 0A0)
   Bolt B tightening torque
   88—118 N·m {9.0—12 kgf·m, 65—87 ft·lbf}
   Bolt C
   Part No.: 9YA02 1080 or M10×1.5 length 55 mm {2.2 in}
   Bolt C tightening torque
   38—52 N·m {3.9—5.3 kgf·m, 29—38 ft·lbf}
   Bolt D
   Part No.: 99450 1030 or M10×1.25 length 30 mm {2.2 in}
   Bolt D tightening torque
   38—52 N·m {3.9—5.3 kgf·m, 29—38 ft·lbf}

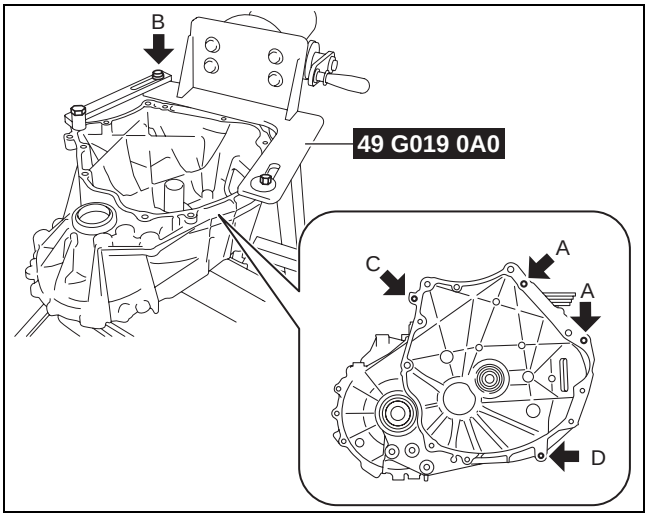

bc61um00000126

5. Apply transaxle oil to the roller area of the taper roller bearing on the differential.

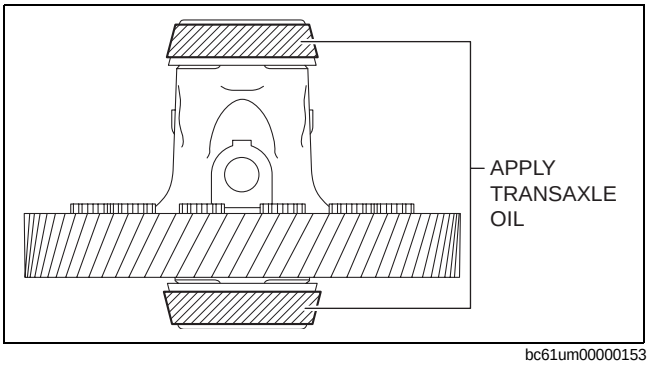

bc61um00000153

6. Assemble the differential to the clutch housing.

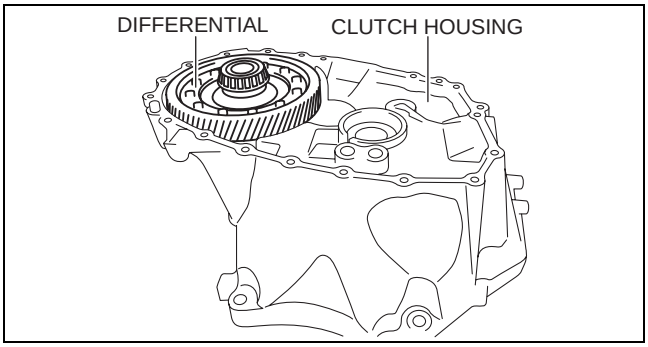

bc61um00000154

cardiagn.com

7. Assemble the transaxle case to the clutch housing.

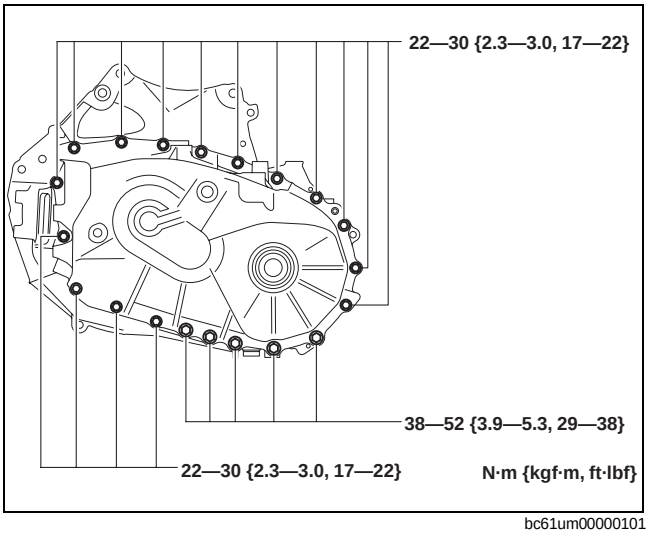

bc61um00000101

8. Set the **SST** so that its end engages the pinion shaft of the differential.

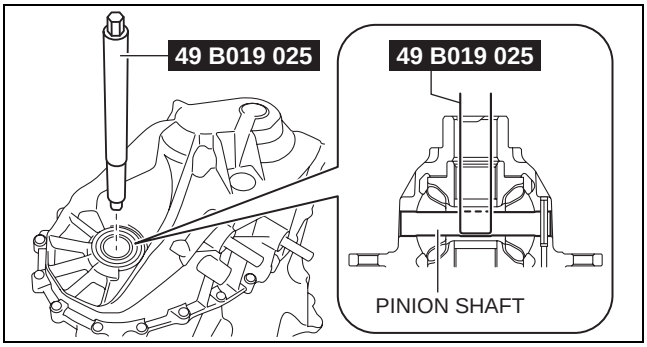

bc61um00000155

9. Rotate the differential ten times using the **SST** to engage the taper roller bearing and the bearing outer race smoothly.

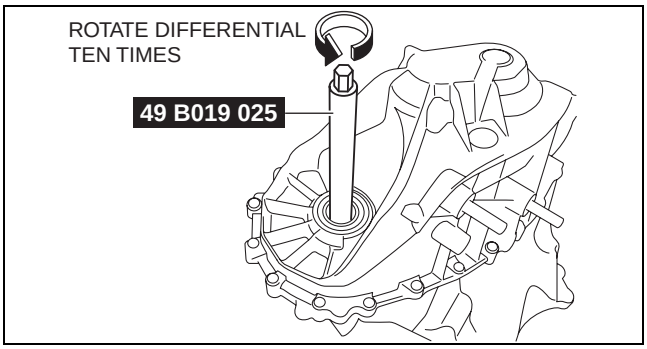

bc61um00000156

10. Measure the differential preload.

Standard preload
0.7—1.7 N·m {7.2—17 kgf·cm, 6.2—15 ft·lbf}

- If the measured preload is within the specification, the shim thickness is the same as the removed one and there is no problem, therefore the "Differential Preload Adjustment" procedure is finished.
- If not within the specification, perform "Shim selection calculation". (See 05-15-58 Shim selection calculation.)

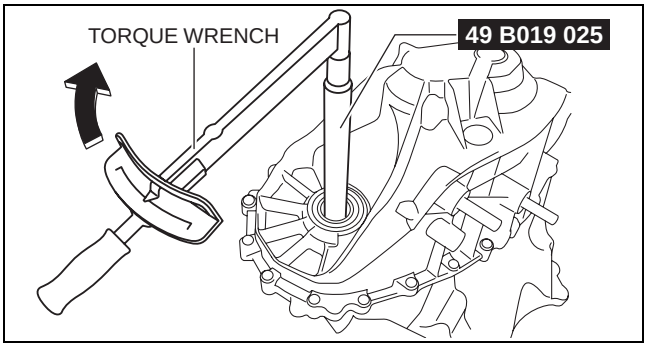

bc61um00000157

cardiagn.com

Shim selection calculation

1. Calculate the preload gap by subtracting the measured preload value from constant number A.
   - Constant number A = **1.2 N·m {12 kgf·cm, 11 in·lbf}**
   - **1.2 N·m {12 kgf·cm, 11 in·lbf}** - measured preload value = preload gap

   Calculation example
   - Measured preload value = **2.5 N·m {25 kgf·cm, 22 in·lbf}**
   - **1.2 N·m {12 kgf·cm, 11 in·lbf}** - **2.5 N·m {25 kgf·cm, 22 in·lbf}** = **-1.3 N·m {13 kgf·cm, 12 in·lbf}**
2. Calculate the shim thickness gap by multiplying the preload gap by constant number B.
   - Constant number B = **0.083 mm/N·m {0.008 mm/kgf·cm, 0.0004 in/in·lbf}**
   - Preload gap x **0.083 mm/N·m {0.008 mm/kgf·cm, 0.0004 in/in·lbf}** = shim thickness gap

   Calculation example
   - Preload gap = **-1.3 N·m {-13 kgf·cm, -12 in·lbf}**
   - **-1.3 N·m {-13 kgf·cm, -12 in·lbf}** x **0.083 mm/N·m {0.008 mm/kgf·cm, 0.0004 in/in·lbf}** = **-0.108 mm {-0.00425 in}**
3. Calculate the shim thickness calculated value by adding the shim thickness gap to the thickness of the shim used in the measurement.
   - Shim thickness gap + thickness of shim used in measurement = shim thickness calculated value

   Calculation example
   - Shim thickness gap = **-0.108 mm {-0.00425 in}**
   - Thickness of shim used in measurement = **0.9000 mm {0.03543 in}**
   - **-0.108 mm {-0.00425 in}** + **0.9000 mm {0.03543 in}** = **0.792 mm {0.0312 in}**
4. Based on the shim thickness calculated value, select a shim of the appropriate thickness.

Shim thickness calculated value		Appropriate shim thickness (mm {in})
Equal to or more (mm {in})	Less than (mm {in})	
1.220 {0.04803}	1.260 {0.04961}	1.350 {0.05315}
1.170 {0.04606}	1.220 {0.04803}	1.300 {0.05118}
1.120 {0.04409}	1.170 {0.04606}	1.250 {0.04921}
1.070 {0.04213}	1.120 {0.04409}	1.200 {0.04724}
1.020 {0.04016}	1.070 {0.04213}	1.150 {0.04528}
0.970 {0.0382}	1.020 {0.04016}	1.100 {0.04331}
0.920 {0.0362}	0.970 {0.0382}	1.050 {0.04134}
0.870 {0.0343}	0.920 {0.0362}	1.000 {0.03937}
0.820 {0.0323}	0.870 {0.0343}	0.950 {0.0374}
0.770 {0.0303}	0.820 {0.0323}	0.900 {0.0354}
0.720 {0.0283}	0.770 {0.0303}	0.850 {0.0335}
0.670 {0.0264}	0.720 {0.0283}	0.800 {0.0315}
0.620 {0.0244}	0.670 {0.0264}	0.750 {0.0295}
0.570 {0.0224}	0.620 {0.0244}	0.700 {0.0276}
0.520 {0.0205}	0.570 {0.0224}	0.650 {0.0256}
0.470 {0.0185}	0.520 {0.0205}	0.600 {0.0236}
0.420 {0.0165}	0.470 {0.0185}	0.550 {0.0217}
0.390 {0.0154}	0.420 {0.0165}	0.50 {0.0197}

Selection example
- Because shim thickness calculated value **0.792 mm {0.0312 in}** applies to **0.775 mm {0.0305 in}** or more and less than **0.825 mm {0.0325 in}**, a shim of **0.800 mm {0.0315 in}** thickness is selected.

Note
- The preload gap is the difference between the central value of the standard preload value and the measured preload value.
- Constant number A, **1.2 N·m {12 kgf·cm, 11 in·lbf}** is the central value of the standard preload value.
- The shim thickness gap is the difference between the thickness of the removed shim and the thickness of an appropriate shim. In the formula to calculate the shim thickness gap, the shim thickness gap is calculated by multiplying the preload gap with constant number B.
- Constant number B is the shim thickness which varies each time the preload changes by **1.0 N·m {10 kgf·cm, 8.9 in·lbf}**. Because the shim thickness changes **0.1 mm {0.004 in}** when the preload changes **1.2 N·m {12 kgf·cm, 11 in·lbf}**, the quotient is **0.083 mm/N·m {0.008 mm/kgf·cm 0.0004 in/in·lbf}**.

cardiagn.com

TRANSAXLE CASE AND CLUTCH HOUSING ASSEMBLY

id051500169900

1. Perform the differential preload adjustment and select a shim of the appropriate thickness. (See BEARING PRELOAD ADJUSTMENT.)
2. Assemble the transaxle case component and clutch housing component in the order shown in the figure.

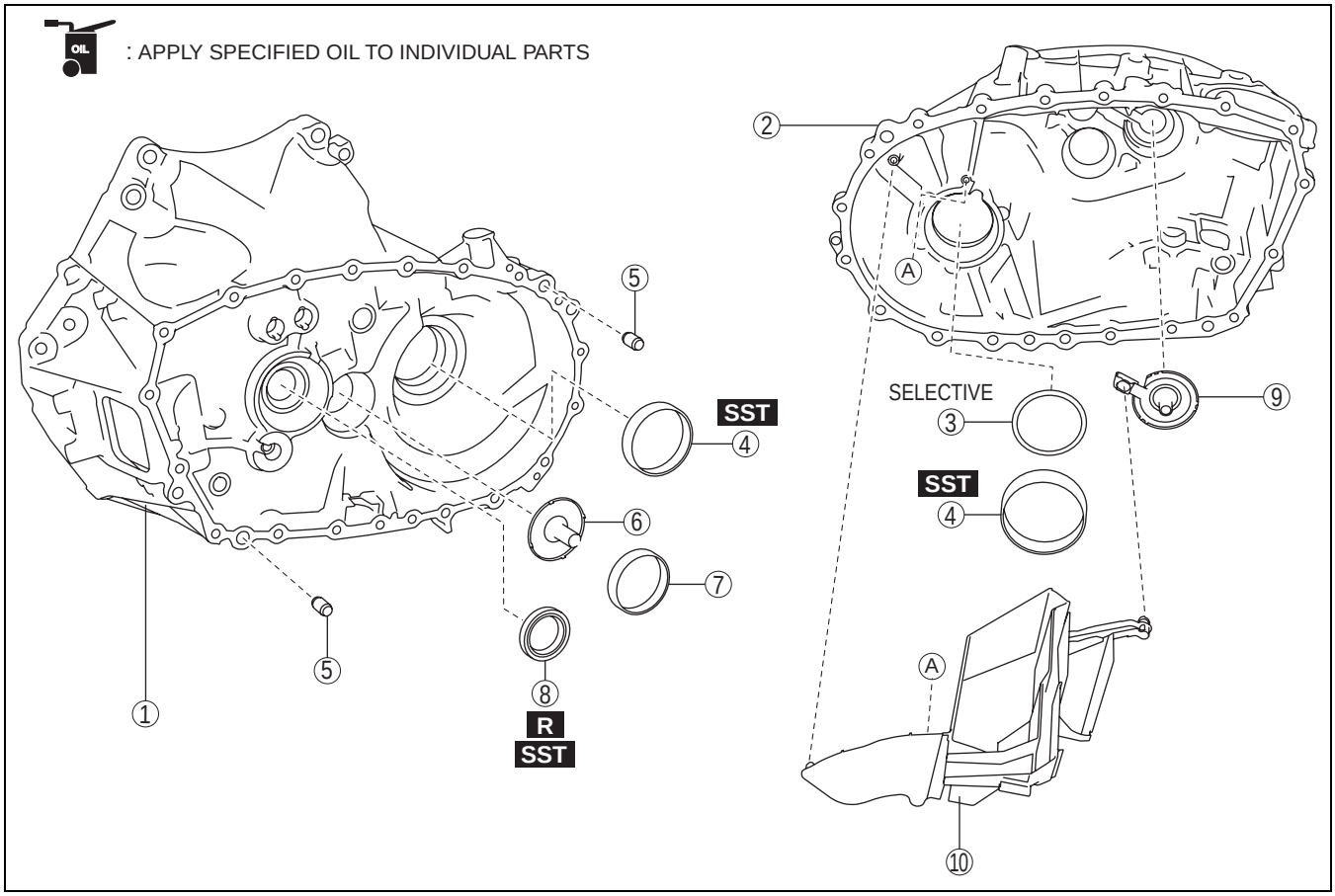

bc61um00000163

1	Clutch housing
2	Transaxle case
3	Shim
4	Bearing outer race (differential) (See 05-15-59 Bearing Outer Race (Differential) Assembly Note.)
5	Dowel pin

6	Funnel
7	Bearing outer race
8	Oil seal (See 05-15-60 Oil Seal Assembly Note.)
9	Funnel
10	Oil path

Bearing Outer Race (Differential) Assembly Note

1. Assemble the bearing outer race (differential) to the clutch housing using the **SST**s.

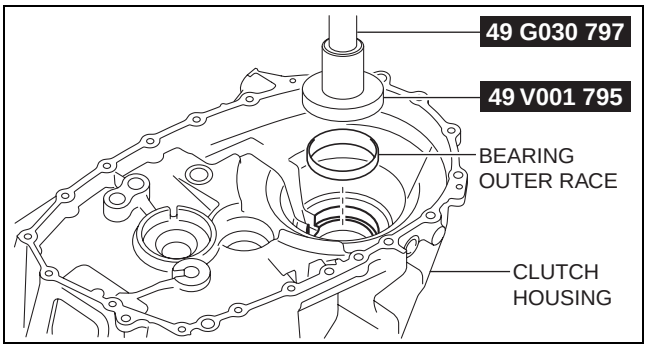

bc61um00000137

cardiagn.com

2. Assemble the bearing outer race (differential) to the transaxle case using the **SST**s.

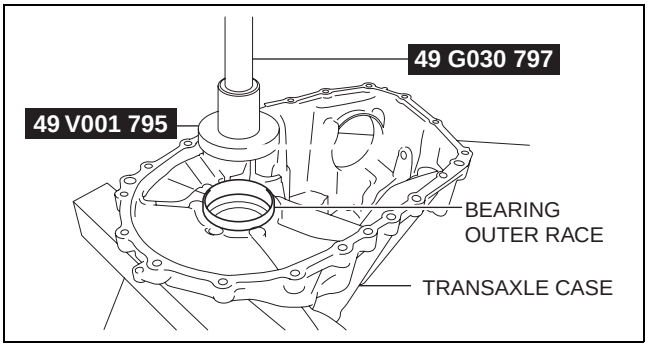

bc61um00000078

Oil Seal Assembly Note

1. Assemble the oil seal using the **SST**.

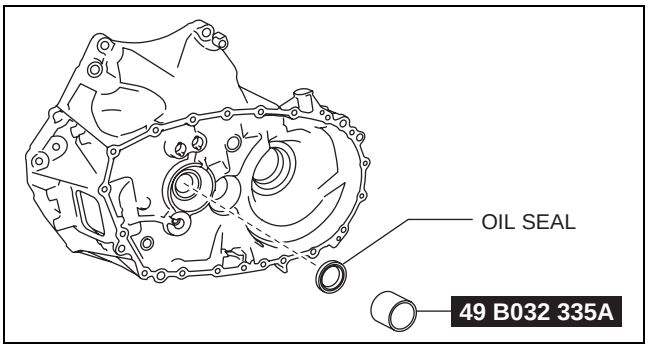

bc61um00000164

TRANSAXLE ASSEMBLY

id051500170000

Step 1

1. Perform the primary shaft and secondary shaft preload adjustment and select a shim of the appropriate thickness. (See BEARING PRELOAD ADJUSTMENT.)
2. Assemble the **SST (49 G019 0A0)** to the **SST (49 0107 680A)**.

   Bolt used
   Part No.: 9YA02 A220 or M12×1.75 length 40 mm {1.6 in}
   Tightening torque
   88—118 N·m {9.0—12 kgf·m, 65—87 ft·lbf}

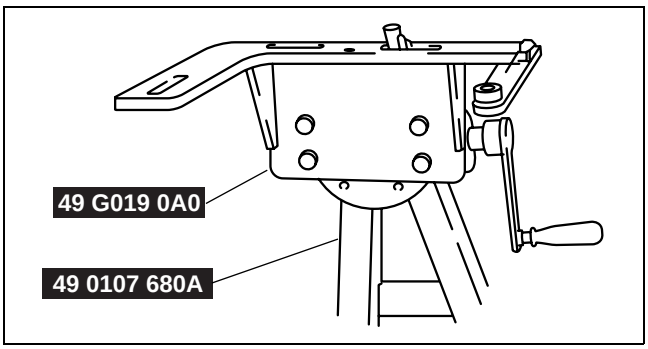

bc61um00000090

3. Assemble the clutch housing component to the **SST**.

   Bolt A
   Part No.: 99450 1055 or M10×1.25 length 55 mm {2.2 in}, and nut (M10×1.25)
   Bolt A tightening torque
   38—52 N·m {3.9—5.3 kgf·m, 29—38 ft·lbf}
   Bolt B
   SST (49 G019 033 part of 49 G019 0A0)
   Bolt B tightening torque
   88—118 N·m {9.0—12 kgf·m, 65—87 ft·lbf}
   Bolt C
   Part No.: 9YA02 1080 or M10×1.5 length 55 mm {2.2 in}
   Bolt C tightening torque
   38—52 N·m {3.9—5.3 kgf·m, 29—38 ft·lbf}

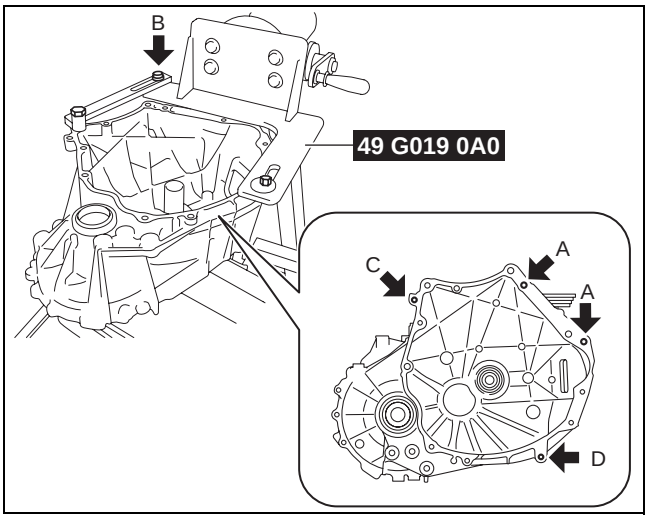

bc61um00000126

cardiagn.com

Bolt D
Part No.: 99450 1030 or M10×1.25 length 30 mm {2.2 in}
Bolt D tightening torque
38—52 N·m {3.9—5.3 kgf·m, 29—38 ft·lbf}

4. Assemble the MTX in the order shown in the figure.

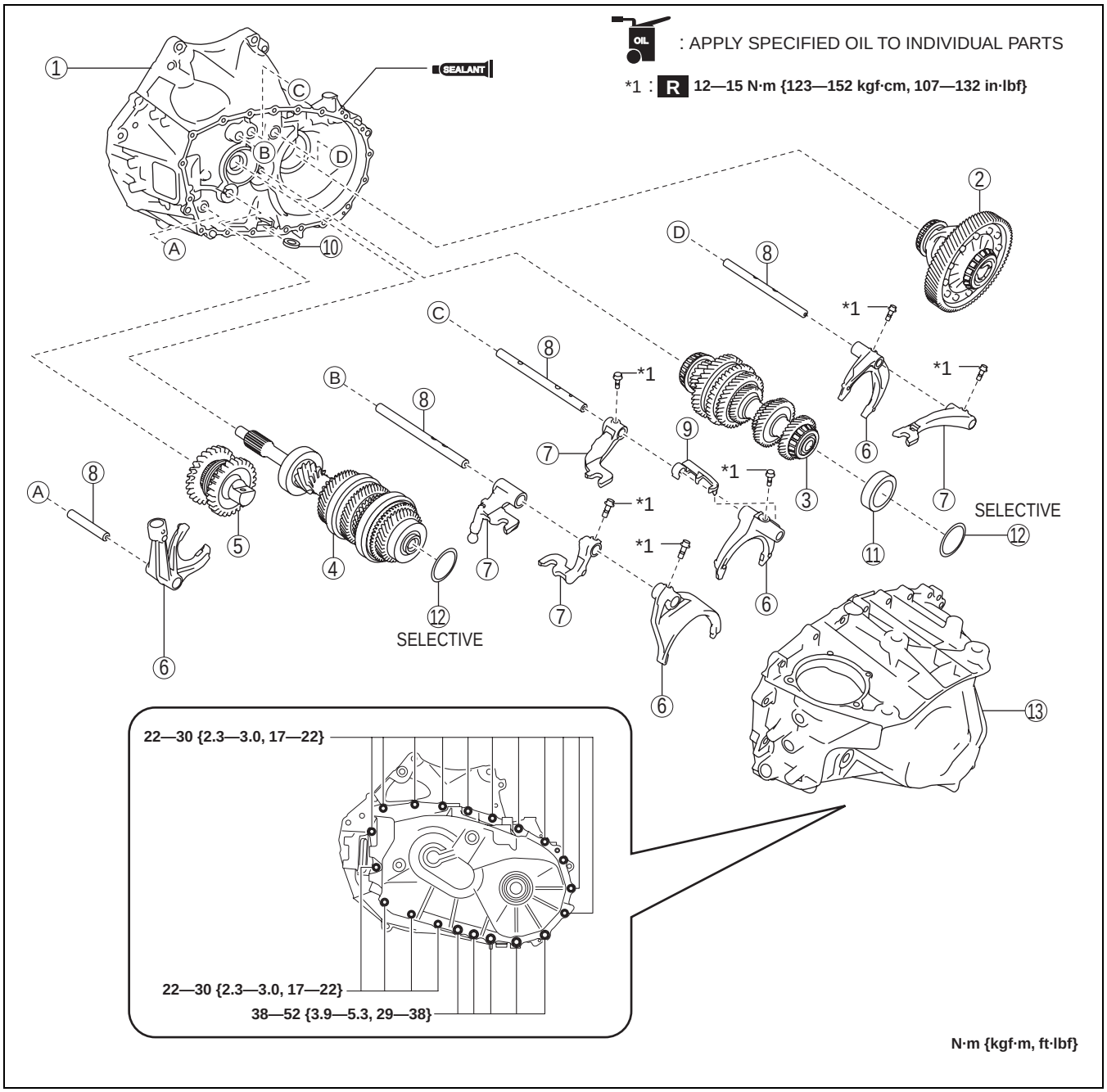

bc61um00000092

1	Clutch housing component
2	Differential
3	Secondary shaft component (See 05-15-62 Secondary shaft component and primary shaft component assembly note.)
4	Primary shaft component (See 05-15-62 Secondary shaft component and primary shaft component assembly note.)
5	Reverse idler gear component (See 05-15-62 Reverse idler gear component assembly note.)

6	Shift fork (See 05-15-63 Shift fork, shift rod end, and shift rod assembly note.)
7	Shift rod end (See 05-15-63 Shift fork, shift rod end, and shift rod assembly note.)
8	Shift rod (See 05-15-63 Shift fork, shift rod end, and shift rod assembly note.)
9	Oil path
10	Magnet

cardiagn.com

11	bearing outer race (See 05-15-65 Bearing outer race, shim, Transaxle case component assembly note.)
12	shim (See 05-15-65 Bearing outer race, shim, Transaxle case component assembly note.)
13	Transaxle case component (See 05-15-65 Bearing outer race, shim, Transaxle case component assembly note.)

Secondary shaft component and primary shaft component assembly note

1. Assemble the secondary shaft component and primary shaft component to the clutch housing component as a single unit.
2. Shake the assembled parts and assemble each one completely.

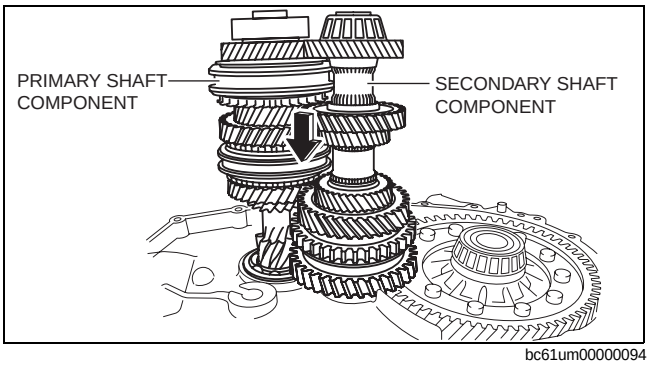

bc61um00000094

Reverse idler gear component assembly note

1. Pull the reverse idler gear shaft and position it to the location shown in the figure.
2. Engage each gear while aligning the shim notch with the ball bearing of the primary shaft component.
3. Push the reverse idler gear shaft and assemble the reverse idler gear component.

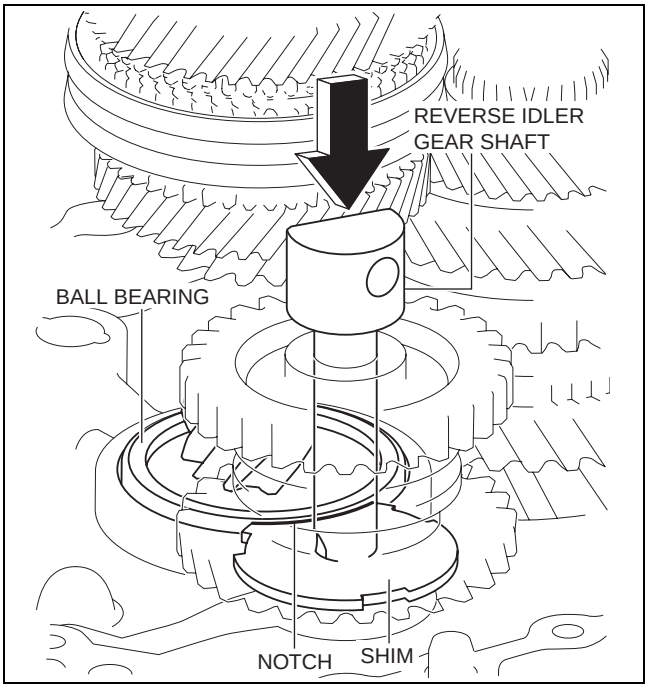

bc61um00000139

cardiagn.com

Shift fork, shift rod end, and shift rod assembly note

1. Assemble the shift fork (1GR/2GR), shift rod end (1GR/2GR), and shift rod (1GR/2GR) using the following procedure:
   (1) Assemble the shift fork to the clutch hub sleeve.
   (2) Verify the assembly direction of the shift rod.

   Note
   - Assemble the shift rod so that the pits used for verifying the assembly direction are facing the transaxle case side and the exterior side of the MTX.

   (3) Pass the shift rod through the assembly hole of the shift rod end.
   (4) Pass the shift rod through the assembly hole of the shift fork.
   (5) Assemble the shift rod to the clutch housing.
   (6) Tighten the assembly bolt and assemble the shift fork, shift rod end, and shift rod.

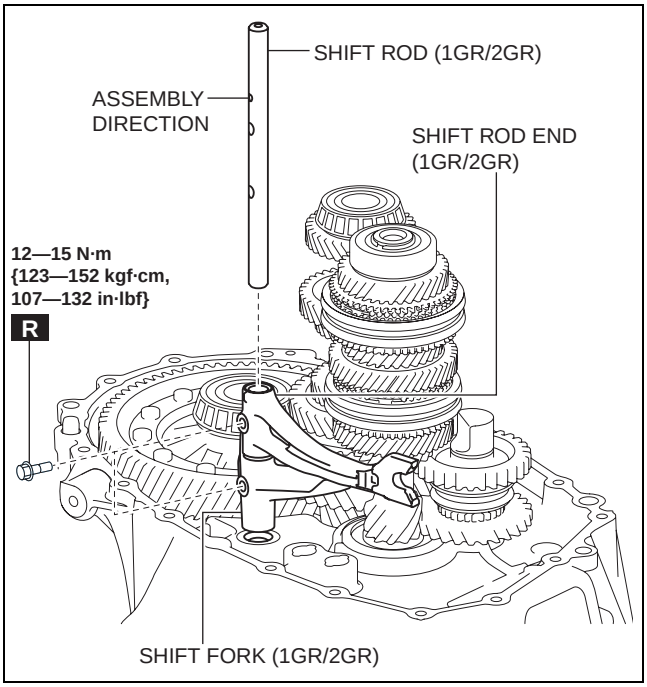

bc61um00000096

2. Assemble the shift fork (5GR/6GR), shift rod end (5GR/6GR), and shift rod (5GR/6GR) using the following procedure:
   (1) Assemble the shift fork to the clutch hub sleeve.
   (2) Verify the assembly direction of the shift rod.

   Note
   - Assemble the shift rod so that the pits used for verifying the assembly direction are facing the transaxle case side and the exterior side of the MTX.

   (3) Pass the shift rod through the assembly hole of the shift fork.
   (4) Set the shift rod end to the position shown in the figure and pass the shift rod through the assembly hole of the shift rod end.
   (5) Assemble the shift rod to the clutch housing.
   (6) Tighten the assembly bolt and assemble the shift fork, shift rod end, and shift rod.

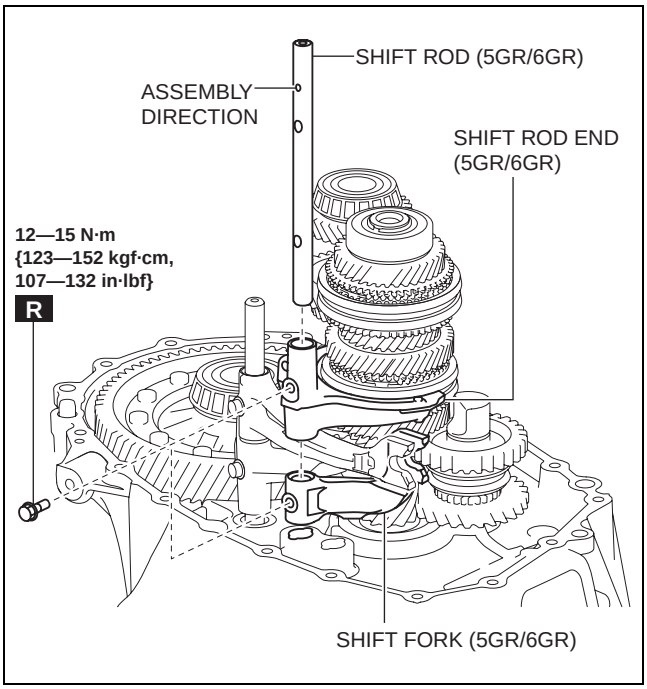

bc61um00000097

cardiagn.com

3. Assemble the shift fork (reverse) and shift rod (reverse) using the following procedure:
   (1) Assemble the shift fork to the clutch hub sleeve.
   (2) Assemble the shift rod.

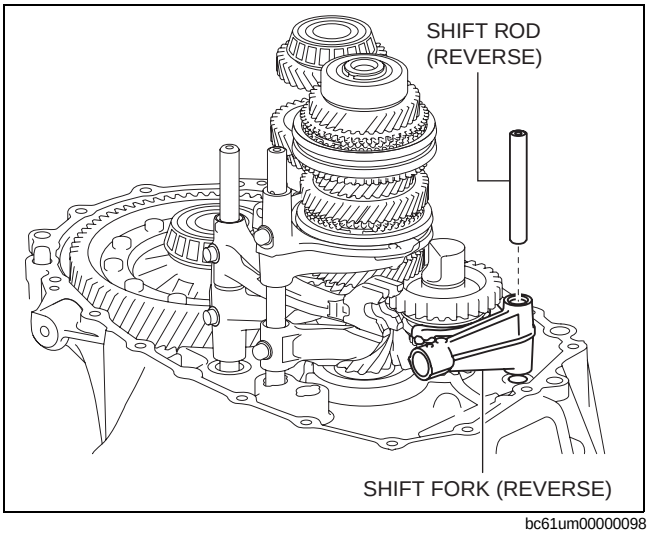

bc61um00000098

4. Assemble the shift fork (3GR/4GR), shift rod end (3GR/4GR), shift rod end (reverse), and shift rod (3GR/4GR) using the following procedure:
   (1) Assemble the shift fork to the clutch hub sleeve.
   (2) Verify the assembly direction of the shift rod.

   Note
   - Assemble the shift rod so that the pits used for verifying the assembly direction are facing the transaxle case side and the exterior side of the MTX.

   (3) Pass the shift rod through the assembly hole of the shift fork.
   (4) Set the shift rod end (3GR/4GR) to the position shown in the figure and pass the shift rod through the assembly hole of the shift rod end (3GR/4GR).
   (5) Set the shift rod end (reverse) to the position shown in the figure and pass the shift rod through the assembly hole of the shift rod end (reverse).
   (6) Assemble the shift rod to the clutch housing.
   (7) Tighten the assembly bolt and assemble the shift fork, shift rod end, and shift rod.

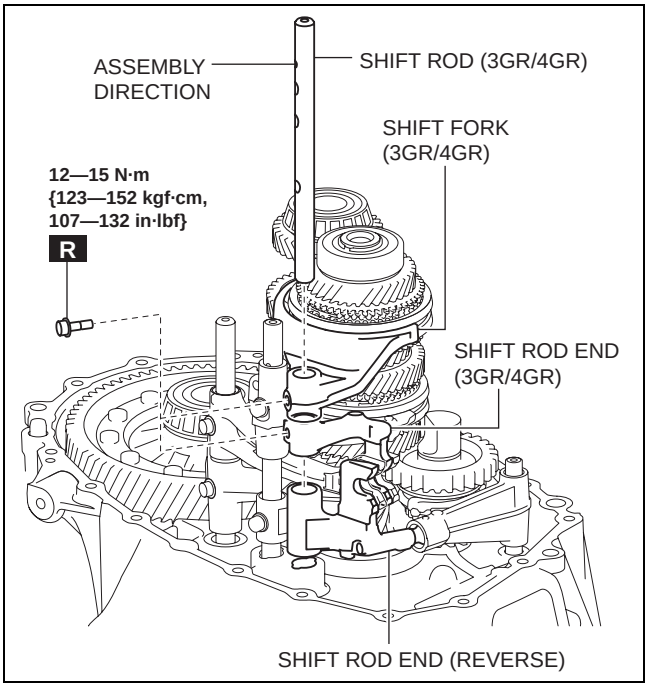

bc61um00000099

cardiagn.com

Bearing outer race, shim, Transaxle case component assembly note

1. Assemble the bearing outer race to the secondary shaft component.

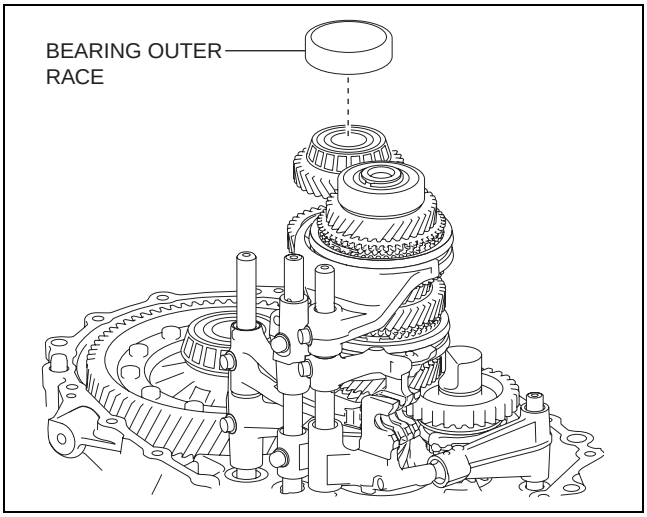

bc61um00000165

2. Assemble the shims.

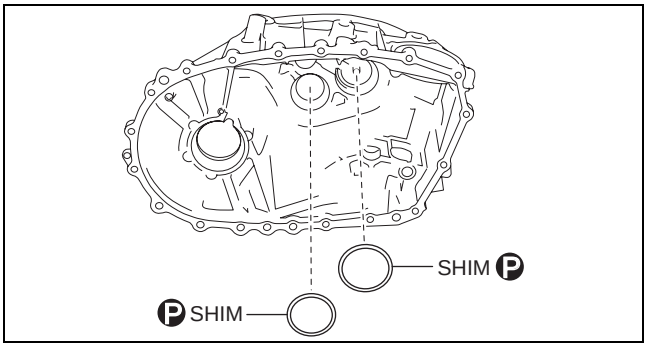

bc61um00000166

3. Apply silicone sealant to the transaxle case component as shown in the figure.

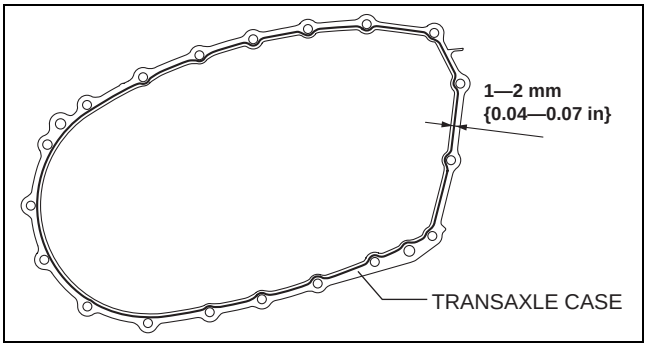

bc61um00000100

4. Assemble the transaxle case component.

   Caution
   - **Assemble the transaxle case component before the applied silicone sealant starts to harden.**

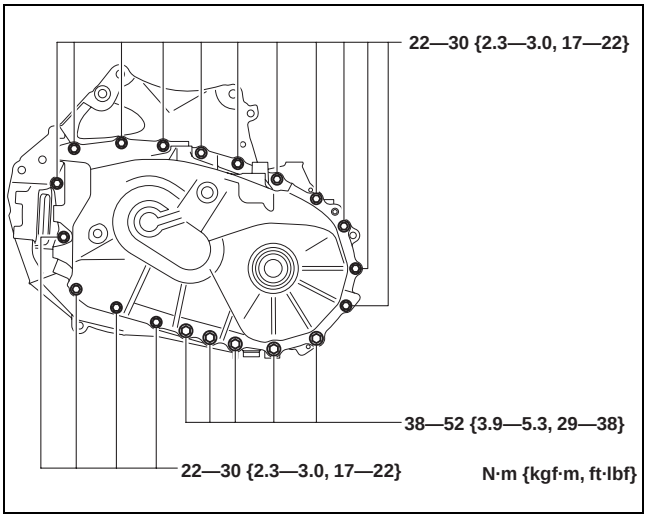

bc61um00000101

cardiagn.com

Step 2

1. Assemble the parts around the MTX in the order shown in the figure.

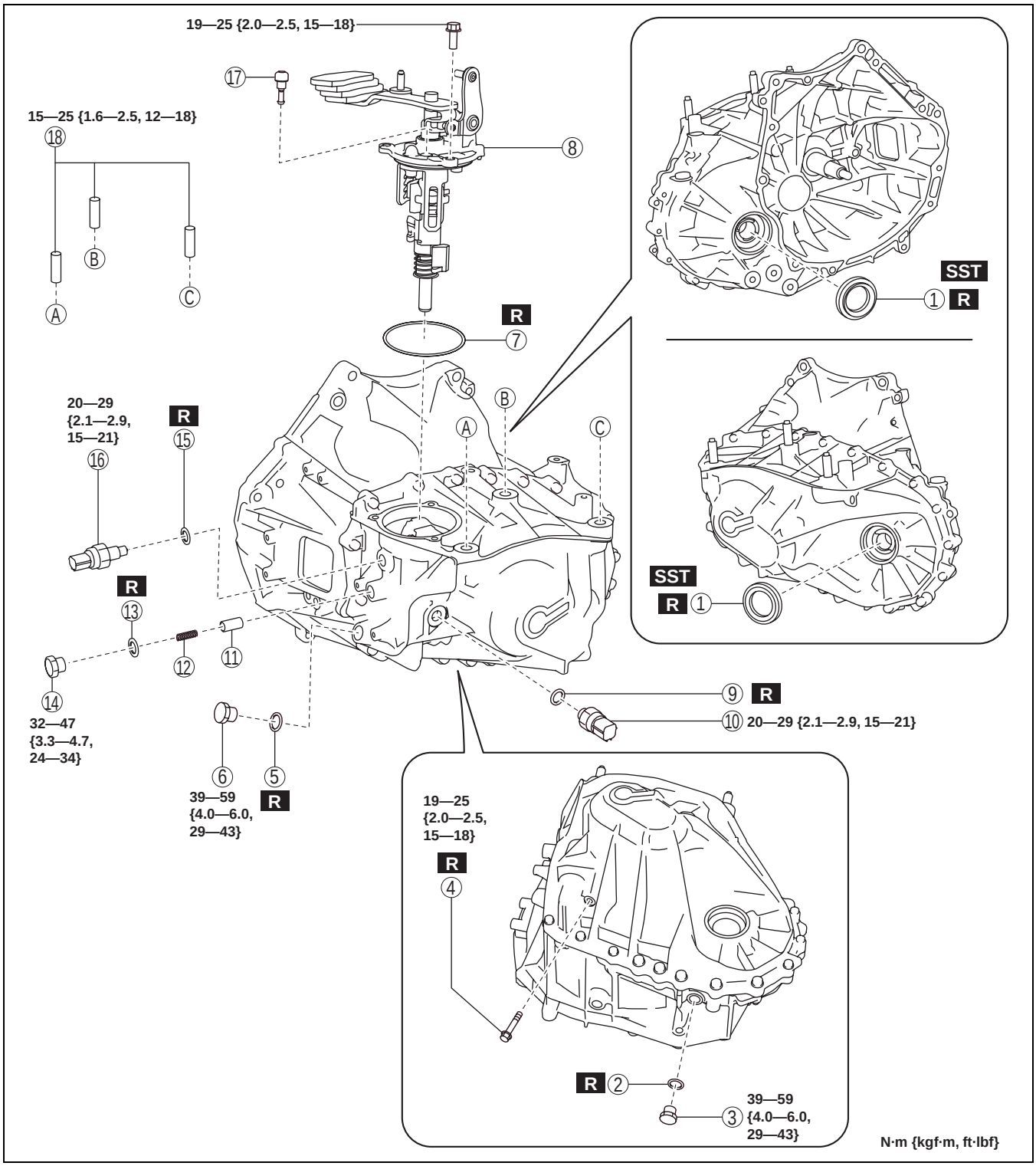

bc61um00000093

1	Oil seal (See 05-15-65 Bearing outer race, shim, Transaxle case component assembly note.)
2	Gasket
3	Drain plug
4	Reverse gear shaft anchor bolt
5	Gasket
6	Oil level plug

7	O-ring
8	Shift control module
9	Gasket
10	Back-up light switch
11	Detent ball pin
12	Spring
13	Gasket
14	Plug

cardiagn.com

15	Gasket
16	Neutral switch

17	Breather
18	Stud bolt

Oil seal assembly note

1. Assemble a new oil seal to the clutch housing using the **SST**s.

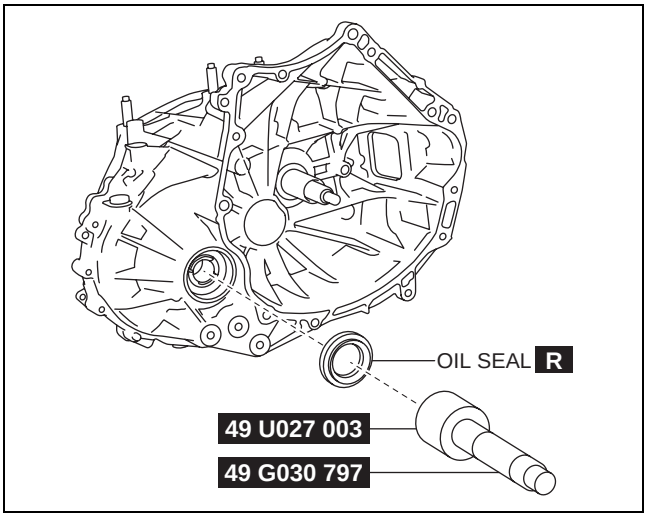

bc61um00000140

2. Assemble a new oil seal to the transaxle case using the **SST**s.

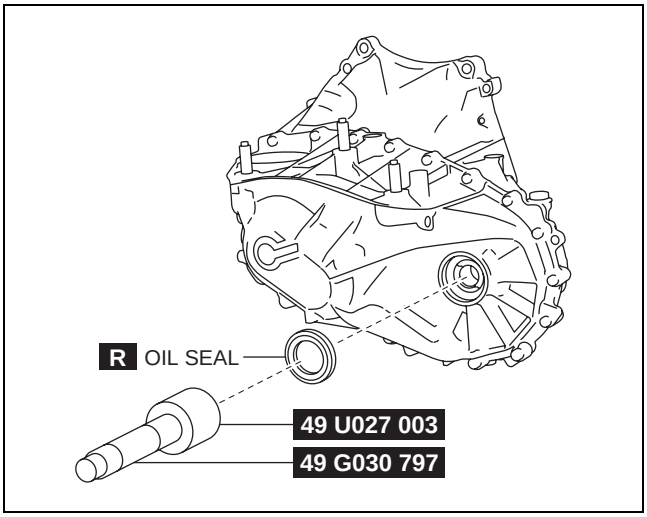

bc61um00000141

cardiagn.com

cardiagn.com

05-50 TECHNICAL DATA

TRANSMISSION/TRANSAXLE TECHNICAL DATA **05-50–1**
Manual Transaxle **05-50–1**
Gear Thrust Clearance **05-50–1**
Gear Inner Diameter **05-50–1**
Gear Sleeve Outer Diameter **05-50–1**
Gear Shaft Runout **05-50–1**
Gear Shaft Outer Diameter **05-50–2**
Synchronizer Clearance **05-50–2**
Shift Fork and Clutch Hub Sleeve Clearance **05-50–2**
Bearing Preload **05-50–2**
Differential Gear Backlash **05-50–2**
Adjust Shim Size **05-50–3**

TRANSMISSION/TRANSAXLE TECHNICAL DATA

id055000800100

Manual Transaxle

Item		Specification
Manual transaxle oil	Grade	API service GL-4
	Viscosity	SAE 75W-80
	Capacity (approx. quantity)	1.65 L {1.74 US qt, 1.45 Imp qt}

Gear Thrust Clearance

Measurement location	Specification (mm {in})	Maximum (mm {in})
3rd gear	0.257 {0.0101}	0.417 {0.0164}
4th gear	0.325 {0.0128}	0.489 {0.0193}
5th gear	0.192 {0.00756}	0.324 {0.0128}
6th gear	0.262 {0.0103}	0.398 {0.0157}
Secondary 1st gear	0.174 {0.00685}	0.291 {0.0115}
Secondary 2nd gear	0.174 {0.00685}	0.294 {0.0116}

Gear Inner Diameter

Measurement location	Specification (mm {in})	Maximum (mm {in})
3rd gear	37.01 {1.4571}	37.02 {1.4575}
4th gear	32.81 {1.2917}	32.82 {1.2921}
5th gear	42.01 {1.6539}	42.02 {1.6543}
6th gear	37.01 {1.4571}	37.02 {1.4575}
Secondary 1st gear	41.512 {1.6343}	41.525 {1.6348}
Secondary 2nd gear	46.534 {1.8320}	46.544 {1.8324}

Gear Sleeve Outer Diameter

Specification (mm {in})	Minimum (mm {in})
46.444 {1.8285}	46.434 {1.8281}

Gear Shaft Runout

Measurement location	Maximum (mm {in})
Primary shaft	0.05 {0.002}
Secondary shaft	0.05 {0.002}

cardiagn.com

Gear Shaft Outer Diameter

Measurement location		Specification (mm {in})	Minimum (mm {in})
Primary shaft	3rd gear assembly part	36.97 {1.4555}	36.96 {1.4551}
	4th gear assembly part	32.77 {1.2902}	32.76 {1.2898}
	5th gear assembly part	41.97 {1.6524}	41.96 {1.652}
	6th gear assembly part	36.97 {1.4555}	36.96 {1.4551}
Secondary shaft	Secondary 1st gear assembly part	41.457 {1.6322}	41.445 {1.6317}
	Secondary 2nd gear assembly part	39.276 {1.5463}	39.266 {1.5459}

Synchronizer Clearance

Measurement location	Specification (mm {in})	Minimum (mm {in})
Synchronizer ring (1GR)	0.94 {0.037}	0.55 {0.022}
Synchronizer ring (2GR)	0.94 {0.037}	0.55 {0.022}
Synchronizer ring (3GR)	0.97 {0.038}	0.32 {0.013}
Synchronizer ring (4GR)	1.05 {0.0413}	0.40 {0.016}
Synchronizer ring (5GR)	1.15 {0.0453}	0.50 {0.020}
Synchronizer ring (6GR)	1.15 {0.0453}	0.50 {0.020}
Synchronizer ring (reverse)	0.95 {0.037}	0.49 {0.019}

Shift Fork and Clutch Hub Sleeve Clearance

Specification (mm {in})	Maximum (mm {in})
0.225 {0.00886}	0.40 {0.016}

Bearing Preload

Item	Specification (N·m {kgf·cm, in·lbf})
differential preload	0.7—1.7 {7.2—17, 6.2—15}

Differential Gear Backlash

Item	Specification (mm {in})
pinion gear backlash	0.05—0.15 {0.002—0.005}

cardiagn.com

Adjust Shim Size
Reverse idler gear (mm {in})

3.150 {0.1240}	3.100 {0.1220}	3.050 {0.1201}	2.950 {0.1161}
2.900 {0.1142}	2.850 {0.1122}	-	-

Primary shaft (mm {in})

1.550 {0.06102}	1.500 {0.05906}	1.450 {0.05709}	1.400 {0.05512}
1.350 {0.05315}	1.300 {0.05118}	1.250 {0.04921}	1.200 {0.04724}
1.150 {0.04528}	1.100 {0.04331}	1.050 {0.04134}	1.000 {0.03937}
0.950 {0.0374}	0.900 {0.0354}	0.850 {0.0335}	0.800 {0.0315}
0.750 {0.0295}	0.700 {0.0276}	0.650 {0.0256}	-

Secondary shaft (mm {in})

1.500 {0.05906}	1.450 {0.05709}	1.400 {0.05512}	1.350 {0.05315}
1.300 {0.05118}	1.250 {0.04921}	1.200 {0.04724}	1.150 {0.04528}
1.100 {0.04331}	1.050 {0.04134}	1.000 {0.03937}	0.950 {0.0374}
0.900 {0.0354}	0.850 {0.0335}	0.800 {0.0315}	0.750 {0.0295}
0.700 {0.0276}	-	-	-

Differential (mm {in})

1.350 {0.05315}	1.300 {0.05118}	1.250 {0.04921}	1.200 {0.04724}
1.150 {0.04528}	1.100 {0.04331}	1.050 {0.04134}	1.000 {0.03937}
0.950 {0.0374}	0.900 {0.0354}	0.850 {0.0335}	0.800 {0.0315}
0.750 {0.0295}	0.700 {0.0276}	0.650 {0.0256}	0.600 {0.0236}
0.550 {0.0217}	0.50 {0.0197}	-	-

Differential thrust washer size (mm {in})

0.95 {0.037}	0.90 {0.035}	0.85 {0.033}	0.80 {0.031}
0.75 {0.030}	-	-	-

cardiagn.com

cardiagn.com

05-60 SERVICE TOOLS

TRANSMISSION/TRANSAXLE SST. . . . 05-60–1
Example **05-60–1**
Manual Transaxle [C66M-R] **05-60–1**

TRANSMISSION/TRANSAXLE SST

id056000804200

1: Mazda SST number
2: Global SST number

Example

1:49 UN30 3009
2:303-009

Crankshaft damper remover

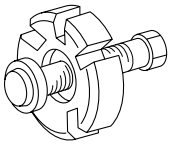

Manual Transaxle [C66M-R]

1:49 0107 680A 2: – Engine stand 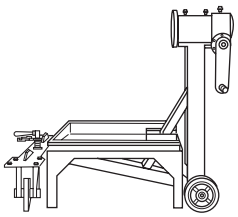	1:49 G019 0A0 2: – Transaxle hanger set 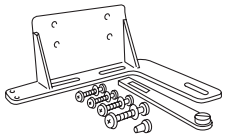	1:49 W032 2A0 2: – Bearing remver set 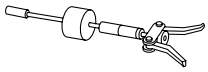
1:49 T032 302 2: – Bearing installer 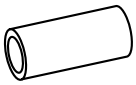	1:49 0710 520 2: – Bearing puller 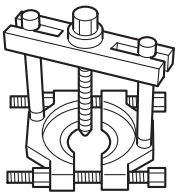	1:49 F401 331 2: – Bearing installer body 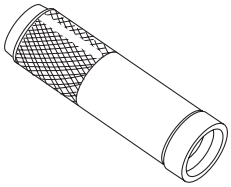
1:49 F401 336B 2: – Attachment 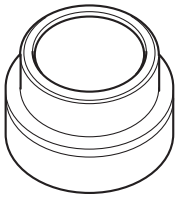	1:49 B032 317 2: – Bearing & oil seal remover 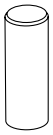	1:49 F026 103 2: – Wheel hub puller 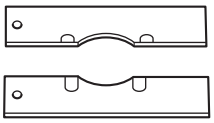
1:49 B017 206 2: – Attachment F 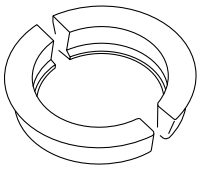	1:49 F401 366A 2: – Plate 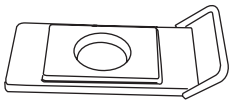	1:49 H027 001 2: – Collar 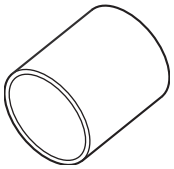
1:49 0839 425C 2: – Bearing puller set 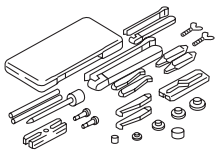	1:49 UB71 525 2: – Bearing Installer 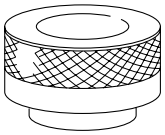	1:49 V001 795 2: – Oil seal installer 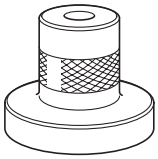
1:49 G030 797 2: – Handle 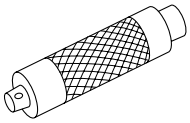	1:49 F027 005 2: – Attachmentϕ62	1:49 F027 003 2: – Handle 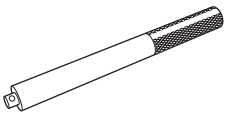

cardiagn.com

1:49 U027 003 2: – Oil seal installer 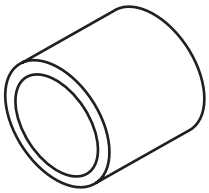	1:49 B032 335A 2: – Oil seal installer 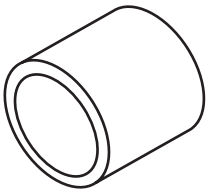	–

cardiagn.com