2010 Pontiac Solstice Owner Manual

In Brief 1-1
Instrument Panel 1-2
Initial Drive Information 1-4
Vehicle Features 1-13
Performance and Maintenance 1-18

Seats and Restraint System 2-1
Front Seats 2-2
Safety Belts 2-6
Child Restraints 2-22
Airbag System 2-36
Restraint System Check 2-50

Features and Controls 3-1
Keys 3-2
Doors and Locks 3-8
Windows 3-12
Theft-Deterrent Systems 3-14
Starting and Operating Your Vehicle 3-17
Mirrors 3-30
Storage Areas 3-31
Roof Panel 3-32
Convertible Top 3-35

Instrument Panel 4-1
Instrument Panel Overview 4-3
Climate Controls 4-13
Warning Lights, Gages, and Indicators 4-17
Driver Information Center (DIC) 4-33
Audio System(s) 4-45

Driving Your Vehicle 5-1
Your Driving, the Road, and the Vehicle 5-2
Towing 5-28

Service and Appearance Care 6-1
Service 6-3
Fuel 6-5
Checking Things Under the Hood 6-10

Downloaded from www.Manualslib.com manuals search engine

Rear Axle 6-40
Headlamp Aiming 6-41
Bulb Replacement 6-42
Windshield Wiper Blade Replacement 6-46
Tires 6-47
Appearance Care 6-90
Vehicle Identification 6-98
Electrical System 6-98
Capacities and Specifications 6-104

Maintenance Schedule 7-1
Maintenance Schedule 7-2

Customer Assistance Information 8-1
Customer Assistance and Information 8-2
Reporting Safety Defects 8-16
Vehicle Data Recording and Privacy 8-18

Index 1

Downloaded from www.Manualslib.com manuals search engine

GENERAL MOTORS, GM, the GM Emblem, PONTIAC, the PONTIAC Emblem, and the name Solstice are registered trademarks of General Motors Corporation.

This manual describes features that may or may not be on your specific vehicle either because they are options that you did not purchase or due to changes subsequent to the printing of this owner manual. Please refer to the purchase documentation relating to your specific vehicle to confirm each of the features found on your vehicle. For vehicles first sold in Canada, substitute the name "General Motors of Canada Limited" for Pontiac Motor Division wherever it appears in this manual.

Keep this manual in the vehicle for quick reference.

Canadian Owners

Propriétaires Canadiens

A French language copy of this manual can be obtained from your dealer/retailer or from:

On peut obtenir un exemplaire de ce guide en français auprès du concessionnaire ou à l'adresse suivante:

Helm, Incorporated
P.O. Box 07130
Detroit, MI 48207

1-800-551-4123

Numéro de poste 6438 de langue française

www.helminc.com

Index

To quickly locate information about the vehicle, use the index in the back of the manual. It is an alphabetical list of what is in the manual and the page number where it can be found.

Litho in U.S.A.
Part No. 25859620 A First Printing

©2009 General Motors Corporation. All Rights Reserved.

Downloaded from www.Manualslib.com manuals search engine

Safety Warnings and Symbols

Warning Messages found on vehicle labels and in this manual describe hazards and what to do to avoid or reduce them.

Danger indicates a hazard with a high level of risk which will result in serious injury or death.

Warning or **Caution** indicates a hazard that could result in injury or death.

⚠ WARNING:

These mean there is something that could hurt you or other people.

Notice: **This means there is something that could result in property or vehicle damage. This would not be covered by the vehicle's warranty**

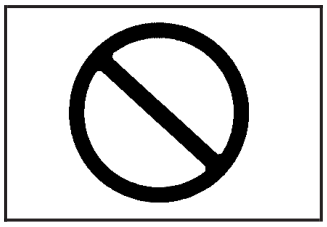

A circle with a slash through it is a safety symbol which means "Do Not," "Do not do this," or "Do not let this happen."

Vehicle Symbols

The vehicle has components and labels that use symbols instead of text. Symbols are shown along with the text describing the operation or information relating to a specific component, control, message, gage, or indicator.

📖 **:** This symbol is shown when you need to see your owner manual for additional instructions or information.

🔧 **:** This symbol is shown when you need to see a service manual for additional instructions or information.

Downloaded from www.Manualslib.com manuals search engine

Vehicle Symbol Chart

Here are some additional symbols that may be found on the vehicle and what they mean. For more information on the symbol, refer to the index.

: Airbag Readiness Light

: Air Conditioning

: Antilock Brake System (ABS)

: Audio Steering Wheel Controls or OnStar®

: Brake System Warning Light

: Charging System

: Cruise Control

: Engine Coolant Temperature

: Exterior Lamps

: Fog Lamps

: Fuel Gage

: Fuses

: Headlamp High/Low-Beam Changer

: LATCH System Child Restraints

: Malfunction Indicator Lamp

: Oil Pressure

: Power

: Remote Vehicle Start

: Safety Belt Reminders

: Tire Pressure Monitor

: Traction Control

: Windshield Washer Fluid

Downloaded from www.Manualslib.com manuals search engine

✍ NOTES

Downloaded from www.Manualslib.com manuals search engine

Section 1 In Brief

Instrument Panel 1-2

Initial Drive Information 1-4
- Remote Keyless Entry (RKE) System 1-4
- Remote Vehicle Start 1-5
- Door Locks 1-5
- Trunk Release 1-6
- Windows 1-6
- Seat Adjustment 1-7
- Safety Belt 1-8
- Sensing System for Passenger Airbag 1-9
- Mirror Adjustment 1-9
- Steering Wheel Adjustment 1-10
- Interior Lighting 1-11
- Exterior Lighting 1-11
- Windshield Wiper/Washer 1-12
- Climate Controls 1-13

Vehicle Features 1-13
- Radio(s) 1-13
- Satellite Radio 1-15
- Portable Audio Devices (Auxiliary Input or USB Port) 1-16
- Steering Wheel Controls 1-16
- Bluetooth® 1-17
- Cruise Control 1-17
- Power Outlets 1-18

Performance and Maintenance 1-18
- Traction Control System (TCS) 1-18
- Electronic Stability Control (ESC) 1-18
- Towing 1-18
- Tire Pressure Monitor 1-19
- Tire Sealant and Compressor Kit 1-19
- Engine Oil Life System 1-20
- Driving for Better Fuel Economy 1-20
- Roadside Assistance Program 1-21
- OnStar® 1-21

Downloaded from www.Manualslib.com manuals search engine

Instrument Panel

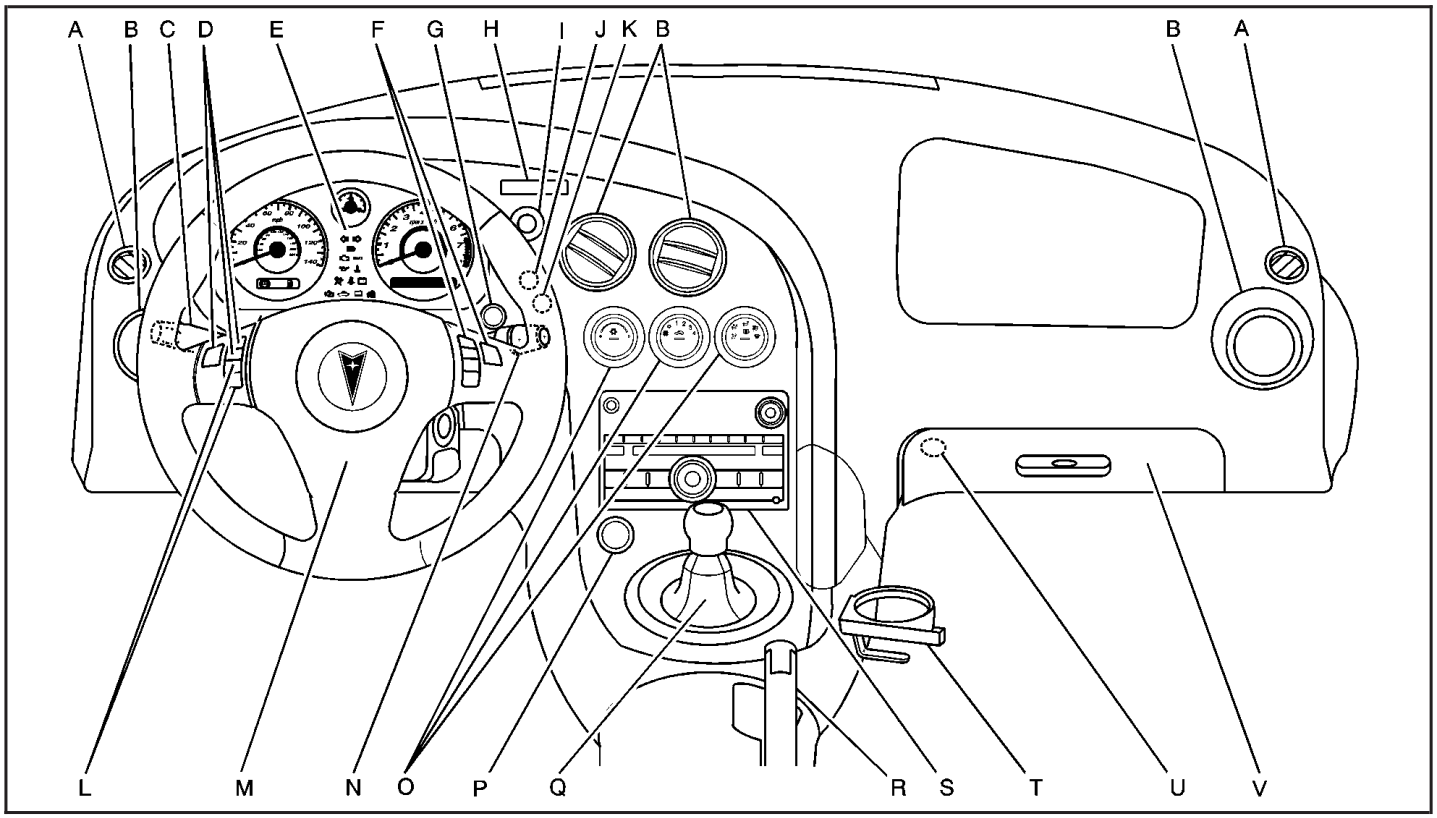

Downloaded from www.Manualslib.com manuals search engine

A. Side Window Outlets. See *Climate Control System on page 4-13*.

B. *Outlet Adjustment on page 4-17*.

C. *Turn Signal/Multifunction Lever on page 4-4*.

D. *Cruise Control on page 4-7* (If Equipped).

E. *Instrument Panel Cluster on page 4-18*.

F. *Audio Steering Wheel Controls on page 4-79* (If Equipped).

G. *Instrument Panel Brightness on page 4-11*.

H. *Passenger Airbag Status Indicator on page 4-22*.

I. *Hazard Warning Flashers on page 4-3*.

J. *Fog Lamps on page 4-11* (If Equipped).

K. Electronic Stability Control (ESC)/Traction Control System (TCS) Button (If Equipped). See *Electronic Stability Control (ESC) on page 5-6* or *Traction Control System (TCS) on page 5-9*.

L. Driver Information Center (DIC) Buttons. See *Driver Information Center (DIC) on page 4-33*.

M. *Horn on page 4-3*.

N. *Windshield Wipers on page 4-5* and *Windshield Washer on page 4-6*.

O. *Climate Control System on page 4-13*.

P. Cigarette Lighter (If Equipped). *Ashtray(s) and Cigarette Lighter on page 4-13* and *Accessory Power Outlet(s) on page 4-12* (If Equipped).

Q. Shift Lever. See *Manual Transmission Operation on page 3-23*. See *Automatic Transmission Operation on page 3-21* (If equipped with automatic transmission).

R. *Parking Brake on page 3-25*.

S. *Audio System(s) on page 4-45*.

T. *Cupholders on page 3-31*.

U. Trunk Release. See *Trunk on page 3-10*.

V. *Glove Box on page 3-31*.

Downloaded from www.Manualslib.com manuals search engine

Initial Drive Information

This section provides a brief overview about some of the important features that may or may not be on your specific vehicle.

For more detailed information, refer to each of the features which can be found later in this owner manual.

Remote Keyless Entry (RKE) System

The RKE transmitter is used to remotely lock and unlock the doors from up to 60 m (195 feet) away from the vehicle.

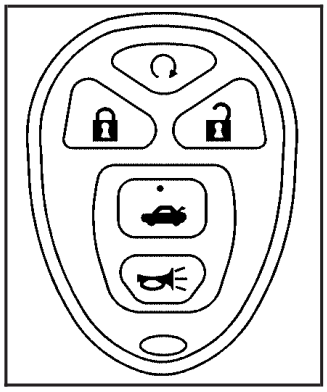

Press to unlock the driver door. Press again within five seconds to unlock all remaining doors.

Press to lock all doors.

Lock and unlock feedback can be personalized.

Press and hold for approximately one second to open the trunk.

Press and release to locate the vehicle.

Press and hold for three seconds to sound the panic alarm.

Press again to cancel the panic alarm.

See *Keys on page 3-2* and *Remote Keyless Entry (RKE) System Operation on page 3-4*.

Downloaded from www.Manualslib.com manuals search engine

Remote Vehicle Start

With this feature the engine can be started from outside of the vehicle.

Starting the Vehicle

1. Aim the RKE transmitter at the vehicle.
2. Press 🔒 .
3. Immediately after completing Step 2, press and hold ⟲ until the turn signal lamps flash.

When the vehicle starts, the parking lamps will turn on and remain on as long as the engine is running. The doors will be locked and the climate control system may come on.

The engine will continue to run for 10 minutes. Repeat the steps for a 10-minute time extension. Remote start can be extended only once.

Canceling a Remote Start

To cancel a remote start:

- Aim the RKE transmitter at the vehicle and press and hold ⟲ until the parking lamps turn off.
- Turn on the hazard warning flashers.
- Turn the ignition switch out of LOCK/OFF position and then back to LOCK/OFF.

See *Remote Vehicle Start on page 3-6*.

Door Locks

Manual Locks

From outside the vehicle, use the key. From inside the vehicle, pull up or down on the manual door lock knob located on the windowsill.

See *Manual Door Locks on page 3-8*.

Power Door Locks

In vehicles with power door locks, the switches are located on the doors.

🚗 **:** Press the top of the switch to lock all doors. Press the bottom of the switch to unlock all doors.

For more information, see:

- *Power Door Locks on page 3-9*.
- *Delayed Locking on page 3-9*.
- *Automatic Door Lock on page 3-9*.
- *Automatic Door Unlock on page 3-9*.

Downloaded from www.Manualslib.com manuals search engine

Trunk Release

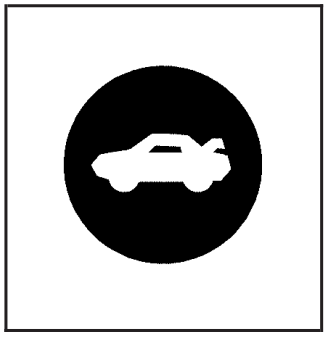

In addition to the trunk release button on the RKE transmitter, there is a remote release button located in the glove box.

See *Trunk on page 3-10*.

Windows

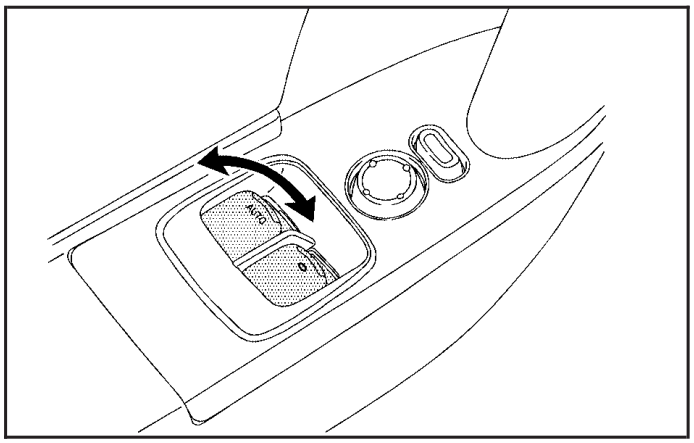

On vehicles with power windows, the driver door has switches for both windows and the passenger door has one switch for itself.

Press down or pull up on a window switch to lower or raise the window.

For more information, see *Power Windows on page 3-13*.

Downloaded from www.Manualslib.com manuals search engine

Seat Adjustment

Manual Seats

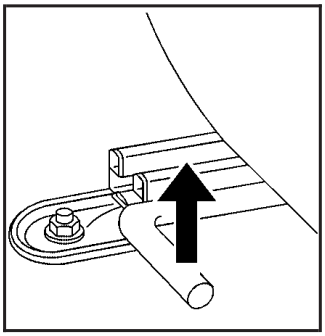

1. Lift the handle under the seat to unlock the seat.
2. Slide the seat to the desired position and release the handle.

Try to move the seat to be sure it is locked in place.

See *Manual Seats on page 2-2*.

Seat Height Adjuster

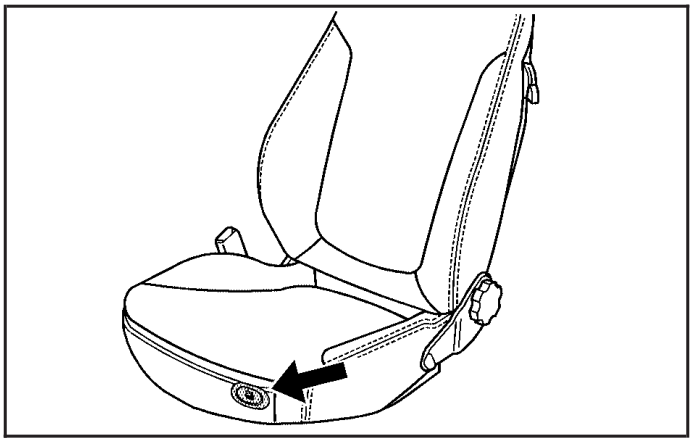

On vehicles with this feature, raise or lower the seat by holding the switch up or down.

See *Seat Height Adjuster on page 2-2*.

Downloaded from www.Manualslib.com manuals search engine

Reclining Seatbacks

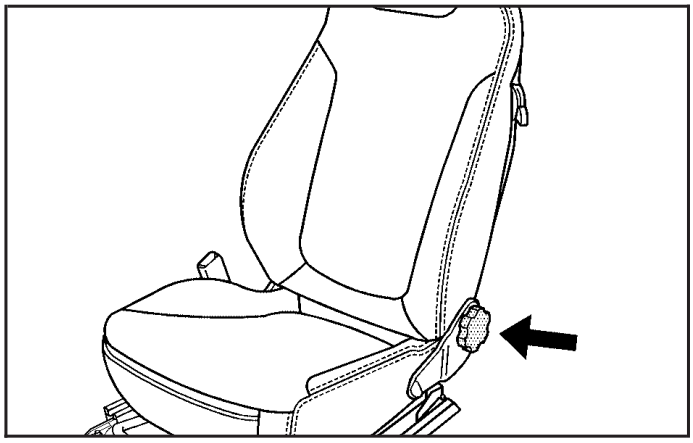

Turn the knob forward or rearward to raise or recline the seatback.

See *Reclining Seatbacks on page 2-3*.

Safety Belt

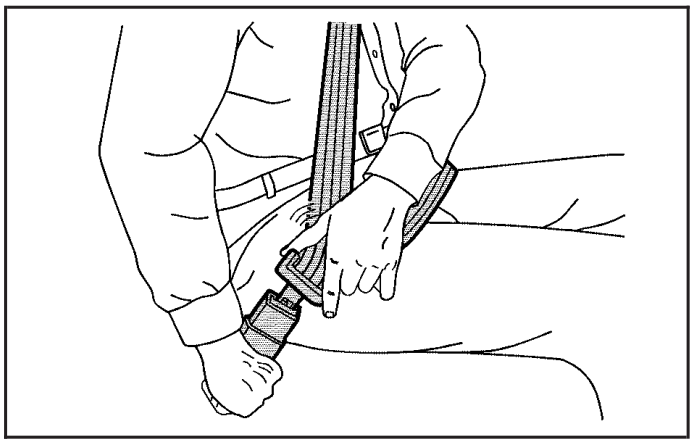

Refer to the following sections for important information on how to use safety belts properly.

- *Safety Belts: They Are for Everyone on page 2-6*.
- *How to Wear Safety Belts Properly on page 2-11*.
- *Lap-Shoulder Belt on page 2-19*.
- *Lower Anchors and Tethers for Children (LATCH) on page 2-31*.

Downloaded from www.Manualslib.com manuals search engine

Sensing System for Passenger Airbag

The passenger sensing system will turn off the right front passenger frontal airbag under certain conditions. The driver airbags are not affected by this.

The passenger airbag status indicator will be visible on the instrument panel when the vehicle is started.

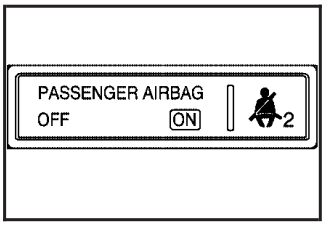

United States

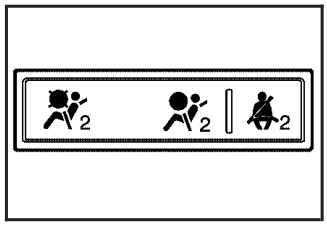

Canada

See *Passenger Sensing System on page 2-43* for important information.

Mirror Adjustment

Exterior Mirrors

Adjust the outside mirrors to see a little of the side of the vehicle, and the area beside the vehicle.

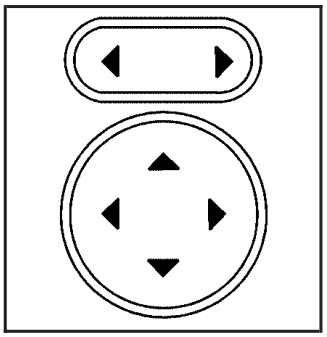

For vehicles with outside power mirrors, the controls are located on the driver door.

1. Press the left or right side of the selector switch located next to the control pad to choose the driver or passenger side mirror.
2. Press one of the four arrows located on the control pad to move the mirror in the desired direction.

Downloaded from www.Manualslib.com manuals search engine

Manually fold the mirrors inward to prevent damage when going through an automatic car wash. To fold, push the mirror toward the vehicle. Push the mirror outward, to return to its original position.

For more information, see:

- *Outside Manual Mirrors on page 3-30*.
- *Outside Power Mirrors on page 3-30*.

Interior Mirror

Hold the mirror in the center to move it up or down and side to side. Adjust the mirror to avoid glare from the headlamps behind your vehicle. Move the lever located at the base of the mirror, to the right for nighttime use and to the left for daytime use. See *Manual Rearview Mirror on page 3-30*.

Steering Wheel Adjustment

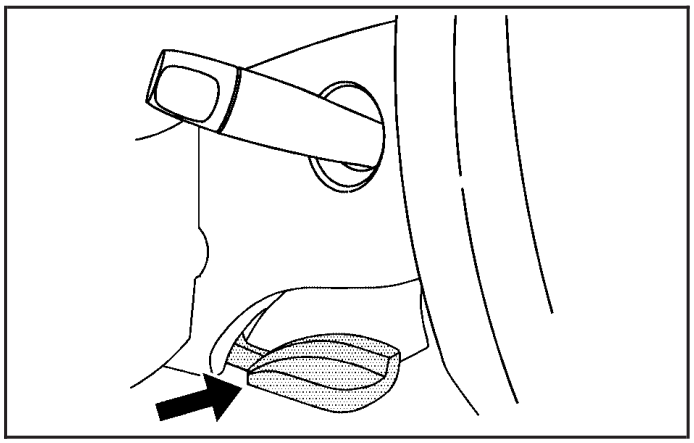

The tilt wheel lever is located on the left side of the steering column.

To adjust the steering wheel:

1. Pull the lever down.
2. Move the steering wheel up or down into a comfortable position.
3. Pull the lever up to lock the steering wheel in place.

See *Tilt Wheel on page 4-3*.

Downloaded from www.Manualslib.com manuals search engine

Interior Lighting

Mirror Reading Lamps

The vehicle has reading lamps on the rearview mirror. Press the button near each lamp on the mirror to turn the reading lamps on and off.

For more information on interior lighting, see:

- *Instrument Panel Brightness on page 4-11*.
- *Entry/Exit Lighting on page 4-11*.

Exterior Lighting

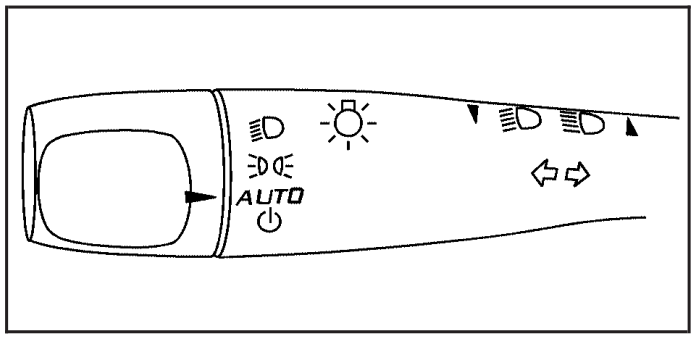

This lever is located on the left side of the steering column.

⏻ **:** Briefly turn to this position to manually turn the automatic lamp control off or on.

AUTO: Automatic operation of the headlamps at normal brightness and other exterior lamps at night. This setting also automatically activates the Daytime Running Lamps (DRL) in the daytime.

: Manual operation of the parking lamps and taillamps.

: Manual operation of the headlamps, parking lamps, and taillamps.

For more information, see:

- *Headlamps on page 4-9*.
- *Daytime Running Lamps (DRL) on page 4-10*.
- *Fog Lamps on page 4-11*.

Downloaded from www.Manualslib.com manuals search engine

Windshield Wiper/Washer

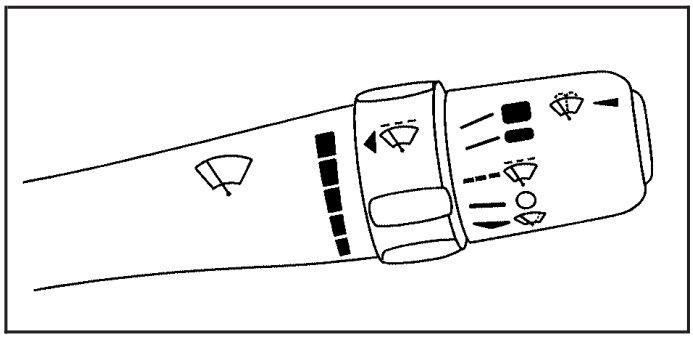

The windshield wiper lever is located on the right side of the steering column.

: Turns the wipers off.

: Turn this band for intermittent or speed sensitive operation. As vehicle speed increases or decreases, the wiper interval also increases or decreases.

: Delays wiping cycle.

: Slow wipes.

: Fast wipes.

: Use for a single wiping cycle.

Windshield Washer: Press the button at the end of the lever until the washers begin.

See *Windshield Wipers on page 4-5* and *Windshield Washer on page 4-6*.

Downloaded from www.Manualslib.com manuals search engine

Climate Controls

the heating and ventilation of the vehicle can be controlled with this system. For vehicles with air conditioning, the cooling can also be controlled.

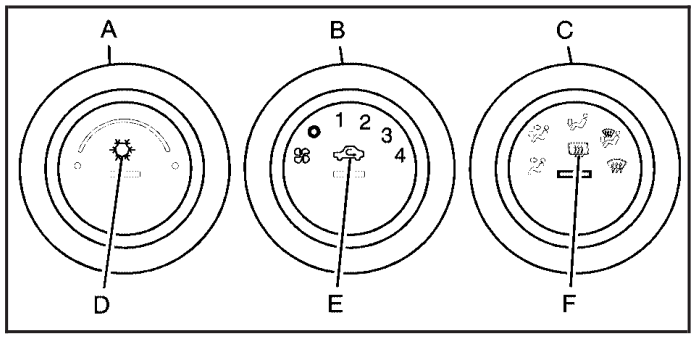

Climate Control System with Air Conditioning shown

A. Temperature Control
B. Fan Control
C. Air Delivery Mode Control
D. Air Conditioning
E. Air Recirculation
F. Rear Window Defogger

See *Climate Control System on page 4-13*.

Vehicle Features

Radio(s)

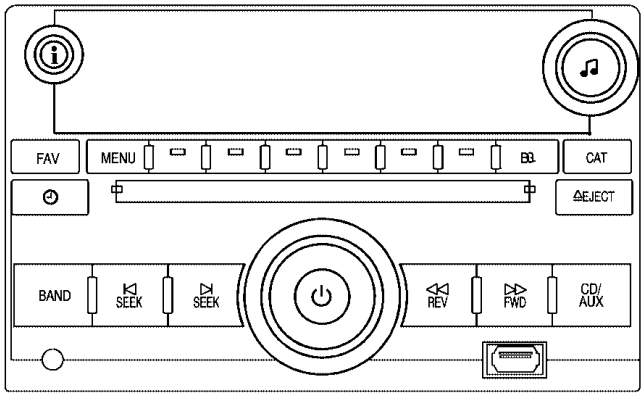

Radio with CD (MP3) and USB Port shown

⏻ **:** Press to turn the system on and off. Turn to increase or decrease the volume.

Downloaded from www.Manualslib.com manuals search engine

BAND: Press to choose between FM, AM, or XM™, if equipped.

♫ **:** Select radio stations.

⏮ ⏭ **:** Seek or scan stations.

ℹ **:** For vehicles with XM, MP3, WMA, or RDS features, press to display additional text information related to the current FM-RDS or XM station; or CD, MP3, WMA song. Song title information will be displayed on the top line of the display while the artist information will be displayed on the bottom line, if the information is available during XM, CD, MP3, or WMA playback. When information is not available, ″No Info″ displays.

For more information about these and other radio features, see *Audio System(s) on page 4-45* and *Radio(s) on page 4-48*.

Storing a Favorite Station

Depending on which radio the vehicle has, radio stations are stored as either favorites or presets.

For radios with a FAV button, a maximum of 36 stations can be stored as favorites using the six softkeys located below the radio station frequency tabs and by using the radio FAV button. Press FAV to go through up to six pages of favorites, each having six favorite stations available per page. Each page of favorites can contain any combination of AM, FM, or XM™ stations.

For radios without a FAV button, up to 18 stations (six FM1, six FM2, and six AM), can be programmed on the six numbered buttons.

See *Radio(s) on page 4-48*.

Downloaded from www.Manualslib.com manuals search engine

Setting the Clock

To set the time and date for the Radio with CD (MP3) and USB port or Radio with a Single CD (MP3) player:

1. Turn the ignition key to ACC/ACCESSORY or ON/RUN.
2. Press ⏻ to turn the radio on.
3. Press ◷ and the HR, MIN, MM, DD, YYYY (hour, minute, month, day, and year) displays.
4. Press the softkey located below any one of the tabs that you want to change.
5. Increase or decrease the time or date by turning ♫ clockwise or counterclockwise.

For detailed instructions on setting the clock for your specific audio system, see *Setting the Clock on page 4-46*.

Satellite Radio

XM is a satellite radio service that is based in the 48 contiguous United States and 10 Canadian provinces. XM satellite radio has a wide variety of programming and commercial-free music, coast-to-coast, and in digital-quality sound.

A fee is required to receive the XM service.

For more information, refer to:

- www.xmradio.com or call 1-800-929-2100 (U.S.)
- www.xmradio.ca or call 1-877-438-9677 (Canada)

See “XM Satellite Radio Service” under *Radio(s) on page 4-48*.

Downloaded from www.Manualslib.com manuals search engine

Portable Audio Devices (Auxiliary Input or USB Port)

This vehicle may have an auxiliary input jack and a USB port, located on the audio faceplate. External devices such as iPods®, laptop computers, MP3 players, CD changers, USB storage devices, etc. can be connected to the auxiliary input jack using a 3.5 mm (1/8 in) cable or the USB port depending on the audio system.

Press the CD/AUX button to play audio from the portable player.

See “Using the Auxiliary Input Jack” and “Using the USB Port” under *Radio(s) on page 4-48*.

Steering Wheel Controls

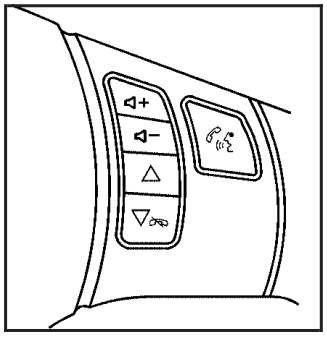

If equipped, these controls are located on the right side of the steering wheel.

+ / –: Increases or decreases volume.

/ : Press to change radio stations, select tracks on a CD, or to select tracks and navigate folders on an iPod® or USB device.

: Press to silence the vehicle speakers only. Press again to turn the sound on. Press and hold longer than two seconds to interact with the OnStar® or Bluetooth systems.

: Press to reject an incoming call, or to end a call.

For more information, see *Audio Steering Wheel Controls on page 4-79*.

Downloaded from www.Manualslib.com manuals search engine

Bluetooth®

For vehicles with an in-vehicle Bluetooth system, it allows users with a Bluetooth enabled cell phone to make and receive hands-free calls using the vehicle's audio system and controls.

The Bluetooth enabled cell phone must be paired with the in-vehicle Bluetooth system before it can be used in the vehicle. Not all phones will support all functions. For more information visit www.gm.com/bluetooth.

For more information, see *Bluetooth® on page 4-69*.

Cruise Control

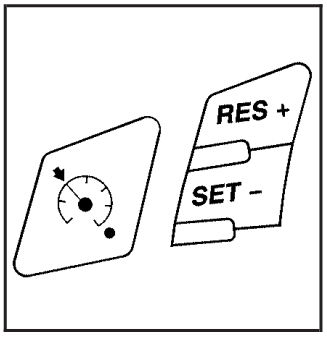

The cruise control buttons are located on the left side of the steering wheel.

: Press to turn the cruise control system on and off.

RES+: Press to resume a set speed and to accelerate the speed.

SET–: Press to set a speed and to decrease the speed.

For more information, see *Cruise Control on page 4-7*.

Downloaded from www.Manualslib.com manuals search engine

Power Outlets

The accessory power outlet can be used to connect electrical equipment, such as a cellular phone.

The accessory power outlet is located on the instrument panel, below the radio.

Remove the cover to use the outlet. Replace the cover when not in use.

See *Accessory Power Outlet(s) on page 4-12* and *Ashtray(s) and Cigarette Lighter on page 4-13*.

Performance and Maintenance

Traction Control System (TCS)

The traction control system limits wheel spin. The system turns on automatically every time the vehicle is started.

- To turn off traction control, press and release on the instrument panel. illuminates and the appropriate DIC message displays. See *DIC Warnings and Messages on page 4-36*.
- Press and release the button again to turn on traction control.

For more information, see *Traction Control System (TCS) on page 5-9*.

Electronic Stability Control (ESC)

The Electronic Stability Control system assists with directional control of the vehicle in difficult driving conditions. The system turns on automatically every time the vehicle is started.

- To turn off both traction control and Electronic Stability Control, press and hold until illuminates and the appropriate DIC message displays. See *DIC Warnings and Messages on page 4-36*.
- Press and release the button again to turn on both systems.

For more information, see *Electronic Stability Control (ESC) on page 5-6*.

Towing

The vehicle was neither designed nor intended to be towed with any of its wheels on the ground.

See *Towing Your Vehicle on page 5-28* and *Recreational Vehicle Towing on page 5-28*.

Downloaded from www.Manualslib.com manuals search engine

Tire Pressure Monitor

This vehicle may have a Tire Pressure Monitor System (TPMS).

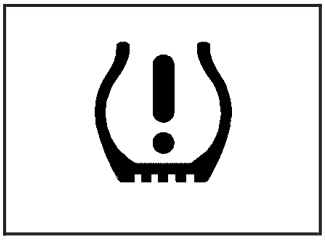

The Tire Pressure Monitor alerts you when a significant reduction in pressure occurs in one or more of the vehicle's tires by illuminating the low tire pressure warning light on the instrument cluster.

The warning light will remain on until the tire pressure is corrected. The proper tire pressures for your vehicle are listed on the Tire and Loading Information label located on the driver side center pillar (B pillar). See *Loading the Vehicle on page 5-22*.

You may notice during cooler conditions that the low tire pressure warning light will appear when the vehicle is first started and then turn off as you drive. This may be an early indicator that your tire pressures are getting low and the tires need to be inflated to the proper pressure.

Note: The Tire Pressure Monitor can alert you about low tire pressure, but it does not replace normal monthly tire maintenance. It is the driver's responsibility to maintain correct tire pressures.

See *Tire Pressure Monitor System on page 6-55* and *Tire Pressure Monitor Operation on page 6-56*.

Tire Sealant and Compressor Kit

This vehicle has a tire sealant and compressor kit which can be used to seal small punctures in the tread area of the tire.

See *Tire Sealant and Compressor Kit (Without Selector Switch) on page 6-71* or *Tire Sealant and Compressor Kit (With Selector Switch) on page 6-80* for complete operating information.

Downloaded from www.Manualslib.com manuals search engine

Engine Oil Life System

The engine oil life system calculates engine oil life based on vehicle use and displays a DIC message when it is necessary to change the engine oil and filter. The oil life system should be reset to 100% only following an oil change.

Resetting the Oil Life System

1. Turn the ignition to ON/RUN, with the engine off.
2. Press the DIC information and reset buttons at the same time to enter the personalization menu.
3. Press the information button until the DIC display shows OIL-LIFE RESET.
4. Press and hold the reset button until the DIC display shows ACKNOWLEDGED.
5. Turn the key to LOCK/OFF.

See *Engine Oil Life System on page 6-19*.

Driving for Better Fuel Economy

Driving habits can affect fuel mileage. Here are some driving tips to get the best fuel economy possible.

- Avoid fast starts and accelerate smoothly.
- Brake gradually and avoid abrupt stops.
- Avoid idling the engine for long periods of time.
- When road and weather conditions are appropriate, use cruise control, if equipped.
- Always follow posted speed limits or drive more slowly when conditions require.
- Keep vehicle tires properly inflated.
- Combine several trips into a single trip.
- Replace the vehicle's tires with the same TPC Spec number molded into the tire's sidewall near the size.
- Follow recommended scheduled maintenance.

Downloaded from www.Manualslib.com manuals search engine

Roadside Assistance Program

U.S.: **1-800-ROADSIDE (762-3743)**

TTY Users: **1-888-889-2438**

Canada: **1-800-268-6800**

As the owner of a new Pontiac, you are automatically enrolled in the Roadside Assistance program. This program provides technically trained advisors who are available 24 hours a day, 365 days a year, minor repair information or towing arrangements.

Roadside Assistance and OnStar

If you have a current OnStar subscription, press the OnStar button and the current GPS location will be sent to an OnStar Advisor who will assess your problem, contact Roadside Assistance, and relay exact location to get you the help you need.

Online Owner Center

The Online Owner Center is a complimentary service that includes online service reminders, vehicle maintenance tips, online owner manual, special privileges and more.

Sign up today at: **www.gmownercenter.com/pontiac** (U.S.) or **www.gm.ca** (Canada).

OnStar®

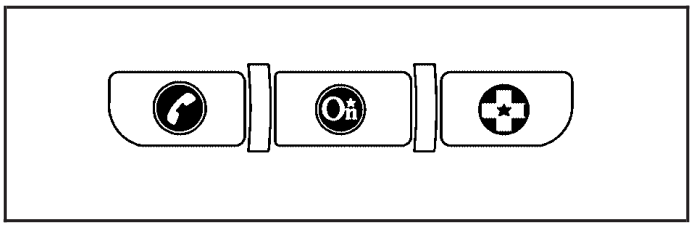

OnStar® uses several innovative technologies and live advisors to provide a wide range of safety, security, navigation, diagnostics, and calling services.

Automatic Crash Response

In a crash, built in sensors can automatically alert an OnStar advisor who is immediately connected to the vehicle to see if you need help.

Downloaded from www.Manualslib.com manuals search engine

How OnStar Service Works

: This blue button connects you to a specially trained OnStar advisor to verify your account information and to answer questions.

: Push this red emergency button to get priority help from specially trained OnStar emergency advisors.

: Push this button for hands-free, voice-activated calling and to give voice commands for turn-by-turn navigation.

Crisis Assist, Stolen Vehicle Assistance, Vehicle Diagnostics, Remote Door Unlock, Roadside Assistance, Turn-by-Turn Navigation and Hands-Free Calling are available on most vehicles. Not all OnStar services are available on all vehicles. For more information see the OnStar Owner's Guide or visit www.onstar.com (U.S.) or www.onstar.ca (Canada), contact OnStar at 1-888-4-ONSTAR (1-888-466-7827) or TTY 1-877-248-2080, or press to speak with an OnStar advisor 24 hours a day, 7 days a week.

For a full description of OnStar services and system limitations, see the OnStar Owner's Guide in the glove box.

OnStar service is subject to the OnStar terms and conditions included in the OnStar Subscriber Information.

OnStar service cannot work unless the vehicle is in a place where OnStar has an agreement with a wireless service provider for service in that area. OnStar service also cannot work unless the vehicle is in a place where the wireless service provider OnStar has hired for that area has coverage, network capacity and reception when the service is needed, and technology that is compatible with the OnStar service. Not all services are available everywhere, particularly in remote or enclosed areas, or at all times.

Downloaded from www.Manualslib.com manuals search engine

The OnStar system can record and transmit vehicle information. This information is automatically sent to an OnStar call center when is pressed, is pressed, or if the airbags or ACR system deploy. This information usually includes the vehicle's GPS location and, in the event of a crash, additional information regarding the crash that the vehicle was involved in (e.g. the direction from which the vehicle was hit). When the virtual advisor feature of OnStar hands-free calling is used, the vehicle also sends OnStar the vehicle's GPS location so they can provide services where it is located.

Location information about the vehicle is only available if the GPS satellite signals are unobstructed and available.

The vehicle must have a working electrical system, including adequate battery power, for the OnStar equipment to operate. There are other problems OnStar cannot control that may prevent OnStar from providing OnStar service at any particular time or place. Some examples are damage to important parts of the vehicle in a crash, hills, tall buildings, tunnels, weather or wireless phone network congestion.

OnStar Steering Wheel Controls

This vehicle may have a Talk/Mute button that can be used to interact with OnStar hands-free calling. See *Audio Steering Wheel Controls on page 4-79* for more information.

On some vehicles, the mute button can be used to dial numbers into voice mail systems, or to dial phone extensions. See the OnStar Owner's Guide for more information.

Your Responsibility

Increase the volume of the radio if the OnStar advisor cannot be heard.

If the light next to the OnStar buttons is red, the system may not be functioning properly. Press and request a vehicle diagnostic. If the light appears clear (no light is appearing), your OnStar subscription has expired and all services have been deactivated. Press to confirm that the OnStar equipment is active.

Downloaded from www.Manualslib.com manuals search engine

✍ NOTES

Downloaded from www.Manualslib.com manuals search engine

Section 2 Seats and Restraint System

Front Seats 2-2
Manual Seats 2-2
Seat Height Adjuster 2-2
Reclining Seatbacks 2-3
Seatback Latches 2-5

Safety Belts 2-6
Safety Belts: They Are for Everyone 2-6
How to Wear Safety Belts Properly 2-11
Lap-Shoulder Belt 2-19
Safety Belt Use During Pregnancy 2-21
Safety Belt Extender 2-22

Child Restraints 2-22
Older Children 2-22
Infants and Young Children 2-25
Child Restraint Systems 2-29
Lower Anchors and Tethers for Children (LATCH) 2-31
Securing a Child Restraint in the Right Front Seat Position 2-32

Airbag System 2-36
Where Are the Airbags? 2-38
When Should an Airbag Inflate? 2-39
What Makes an Airbag Inflate? 2-40
How Does an Airbag Restrain? 2-40
What Will You See After an Airbag Inflates? 2-41
Passenger Sensing System 2-43
Servicing Your Airbag-Equipped Vehicle 2-48
Adding Equipment to Your Airbag-Equipped Vehicle 2-48

Restraint System Check 2-50
Checking the Restraint Systems 2-50
Replacing Restraint System Parts After a Crash 2-51

Downloaded from www.Manualslib.com manuals search engine

Front Seats

Manual Seats

⚠ WARNING:

You can lose control of the vehicle if you try to adjust a manual driver's seat while the vehicle is moving. The sudden movement could startle and confuse you, or make you push a pedal when you do not want to. Adjust the driver's seat only when the vehicle is not moving.

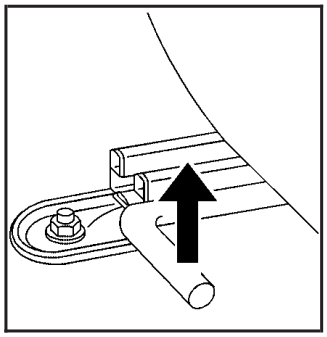

1. Lift the bar located under the front of the seat to unlock it.
2. Slide the seat to the desired position and release the bar.

Try to move the seat with your body to be sure the seat is locked in place.

Seat Height Adjuster

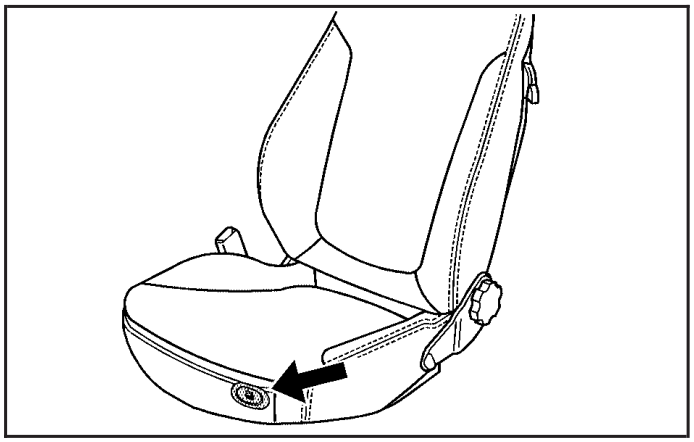

On vehicles with a power driver's seat height adjuster, the switch is located on the front outboard side of the seat.

Raise or lower the seat by holding the switch up or down.

Downloaded from www.Manualslib.com manuals search engine

Reclining Seatbacks

⚠ WARNING:

You can lose control of the vehicle if you try to adjust a manual driver's seat while the vehicle is moving. The sudden movement could startle and confuse you, or make you push a pedal when you do not want to. Adjust the driver's seat only when the vehicle is not moving.

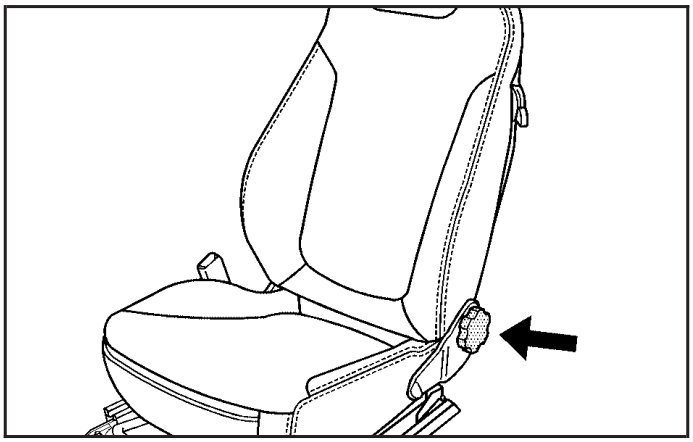

To adjust the seatback, turn the knob on the outboard side of the seatback until the seatback is in the desired position.

Downloaded from www.Manualslib.com manuals search engine

⚠ WARNING:

Sitting in a reclined position when your vehicle is in motion can be dangerous. Even if you buckle up, your safety belts cannot do their job when you are reclined like this.

The shoulder belt cannot do its job. In a crash, you could go into it, receiving neck or other injuries.

The lap belt cannot do its job either. In a crash the belt could go up over your abdomen. The belt forces would be there, not at your pelvic bones. This could cause serious internal injuries.

For proper protection when the vehicle is in motion, have the seatback upright. Then sit well back in the seat and wear your safety belt properly.

Do not have a seatback reclined if your vehicle is moving.

Downloaded from www.Manualslib.com manuals search engine

Seatback Latches

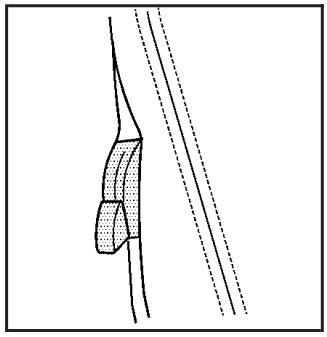

The seats have a latch located on the outboard side near the top of the seatback that enables the front seatback(s) to fold forward.

To fold the seatback forward, lift the latch and push the seatback forward.

⚠ WARNING:

If either seatback is not locked, it could move forward in a sudden stop or crash. That could cause injury to the person sitting there. Always push and pull on the seatbacks to be sure they are locked.

Downloaded from www.Manualslib.com manuals search engine

Safety Belts

Safety Belts: They Are for Everyone

This section of the manual describes how to use safety belts properly. It also describes some things not to do with safety belts.

⚠ WARNING:

Do not let anyone ride where a safety belt cannot be worn properly. In a crash, if you or your passenger(s) are not wearing safety belts, the injuries can be much worse. You can hit things inside the vehicle harder or be ejected from the vehicle. You and your passenger(s) can be seriously injured or killed. In the same crash, you might not be, if you are buckled up. Always fasten your safety belt, and check that your passenger(s) are restrained properly too.

⚠ WARNING:

It is extremely dangerous to ride in a cargo area, inside or outside of a vehicle. In a collision, people riding in these areas are more likely to be seriously injured or killed. Do not allow people to ride in any area of your vehicle that is not equipped with seats and safety belts. Be sure everyone in your vehicle is in a seat and using a safety belt properly.

This vehicle has indicators as a reminder to buckle the safety belts. See *Safety Belt Reminders on page 4-20* for additional information.

In most states and in all Canadian provinces, the law requires wearing safety belts. Here is why:

You never know if you will be in a crash. If you do have a crash, you do not know if it will be a serious one.

A few crashes are mild, and some crashes can be so serious that even buckled up, a person would not survive. But most crashes are in between. In many of them, people who buckle up can survive and sometimes walk away. Without safety belts, they could have been badly hurt or killed.

After more than 40 years of safety belts in vehicles, the facts are clear. In most crashes buckling up does matter... a lot!

Downloaded from www.Manualslib.com manuals search engine

Why Safety Belts Work

When you ride in or on anything, you go as fast as it goes.

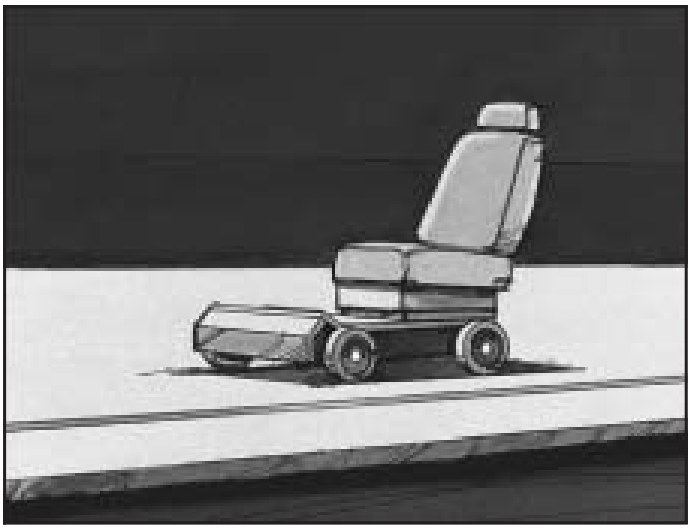

Take the simplest vehicle. Suppose it is just a seat on wheels.

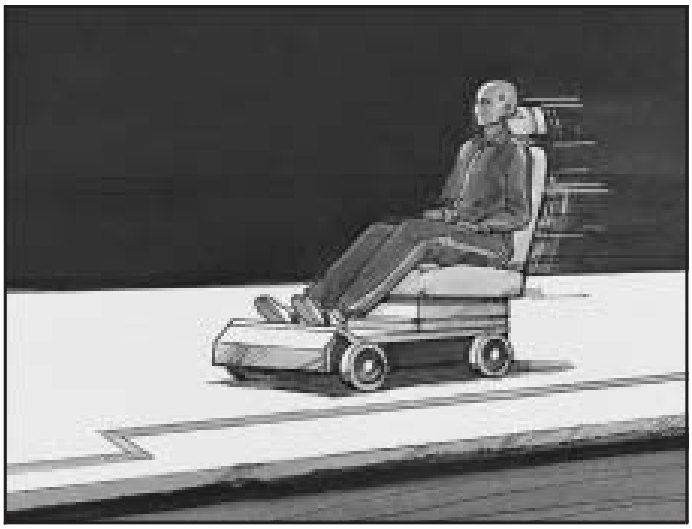

Put someone on it.

Downloaded from www.Manualslib.com manuals search engine

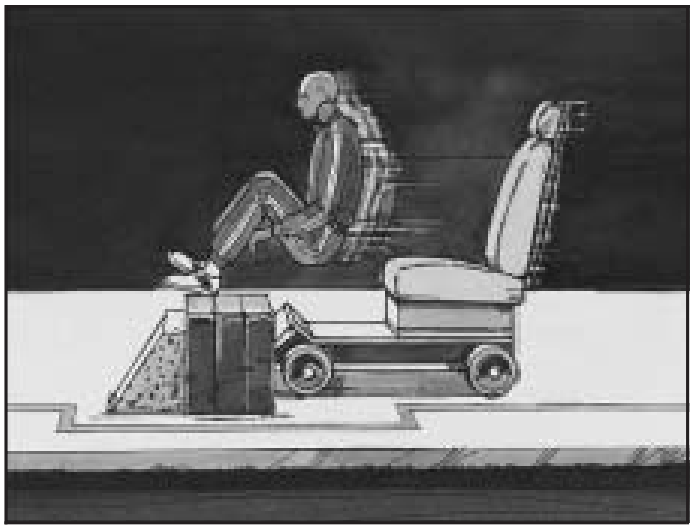

Get it up to speed. Then stop the vehicle. The rider does not stop.

The person keeps going until stopped by something. In a real vehicle, it could be the windshield...

Downloaded from www.Manualslib.com manuals search engine

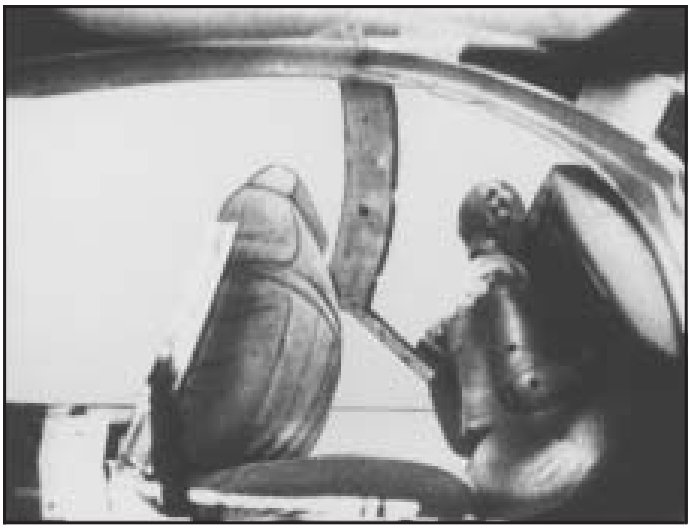

or the instrument panel...

or the safety belts!

With safety belts, you slow down as the vehicle does. You get more time to stop. You stop over more distance, and your strongest bones take the forces. That is why safety belts make such good sense.

Downloaded from www.Manualslib.com manuals search engine

Questions and Answers About Safety Belts

Q: Will I be trapped in the vehicle after a crash if I am wearing a safety belt?

A: You *could* be — whether you are wearing a safety belt or not. But your chance of being conscious during and after an accident, so you *can* unbuckle and get out, is *much* greater if you are belted. And you can unbuckle a safety belt, even if you are upside down.

Q: If my vehicle has airbags, why should I have to wear safety belts?

A: Airbags are supplemental systems only; so they work *with* safety belts — not instead of them. Whether or not an airbag is provided, all occupants still have to buckle up to get the most protection. That is true not only in frontal collisions, but especially in side and other collisions.

Q: If I am a good driver, and I never drive far from home, why should I wear safety belts?

A: You may be an excellent driver, but if you are in a crash — even one that is not your fault — you and your passenger(s) can be hurt. Being a good driver does not protect you from things beyond your control, such as bad drivers.

Most accidents occur within 25 miles (40 km) of home. And the greatest number of serious injuries and deaths occur at speeds of less than 40 mph (65 km/h).

Safety belts are for everyone.

Downloaded from www.Manualslib.com manuals search engine

How to Wear Safety Belts Properly

This section is only for people of adult size.

Be aware that there are special things to know about safety belts and children. And there are different rules for smaller children and infants. If a child will be riding in the vehicle, see *Older Children on page 2-22* or *Infants and Young Children on page 2-25*. Follow those rules for everyone's protection.

It is very important for all occupants to buckle up. Statistics show that unbelted people are hurt more often in crashes than those who are wearing safety belts.

Occupants who are not buckled up can be thrown out of the vehicle in a crash. And they can strike others in the vehicle who are wearing safety belts.

First, before you or your passenger(s) wear a safety belt, there is important information you should know.

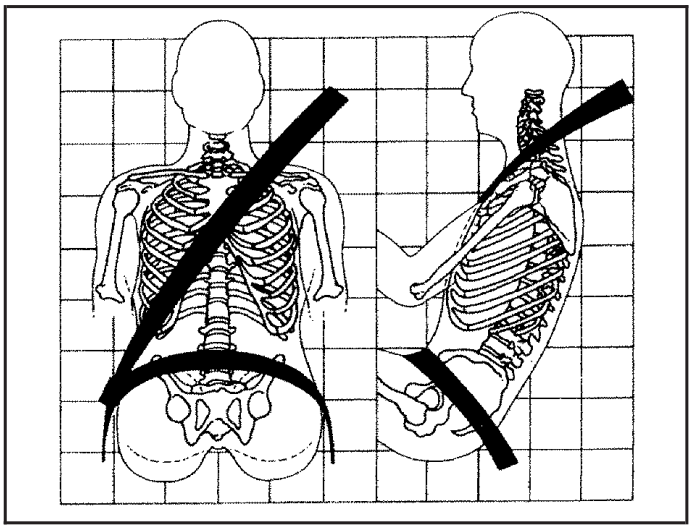

Sit up straight and always keep your feet on the floor in front of you. The lap part of the belt should be worn low and snug on the hips, just touching the thighs. In a crash, this applies force to the strong pelvic bones and you would be less likely to slide under the lap belt. If you slid under it, the belt would apply force on your abdomen. This could cause serious or even fatal injuries. The shoulder belt should go over the shoulder and across the chest. These parts of the body are best able to take belt restraining forces.

The shoulder belt locks if there is a sudden stop or crash.

Downloaded from www.Manualslib.com manuals search engine

Q: What is wrong with this?

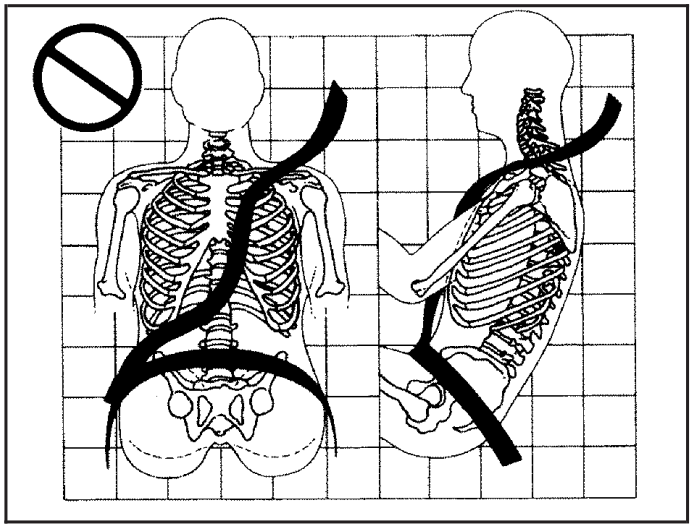

A: The shoulder belt is too loose. It will not give as much protection this way.

⚠ WARNING:

You can be seriously hurt if your shoulder belt is too loose. In a crash, you would move forward too much, which could increase injury. The shoulder belt should fit snugly against your body.

Downloaded from www.Manualslib.com manuals search engine

Q: What is wrong with this?

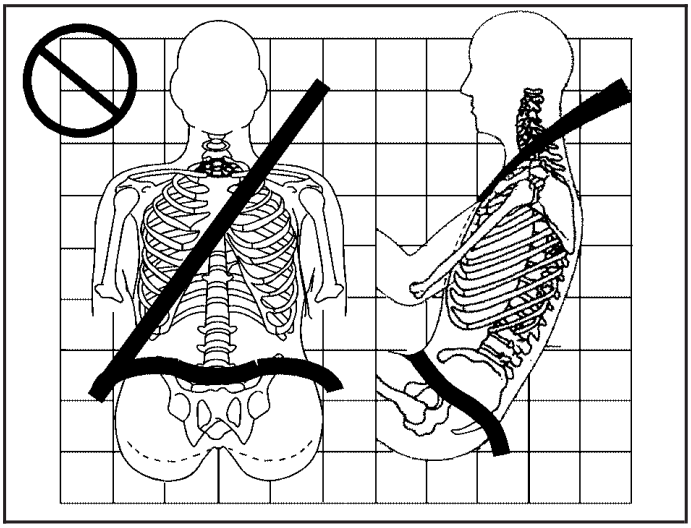

A: The lap belt is too loose. It will not give nearly as much protection this way.

⚠ WARNING:

You can be seriously hurt if your lap belt is too loose. In a crash, you could slide under the lap belt and apply force on your abdomen. This could cause serious or even fatal injuries. The lap belt should be worn low and snug on the hips, just touching the thighs.

Downloaded from www.Manualslib.com manuals search engine

Q: What is wrong with this?

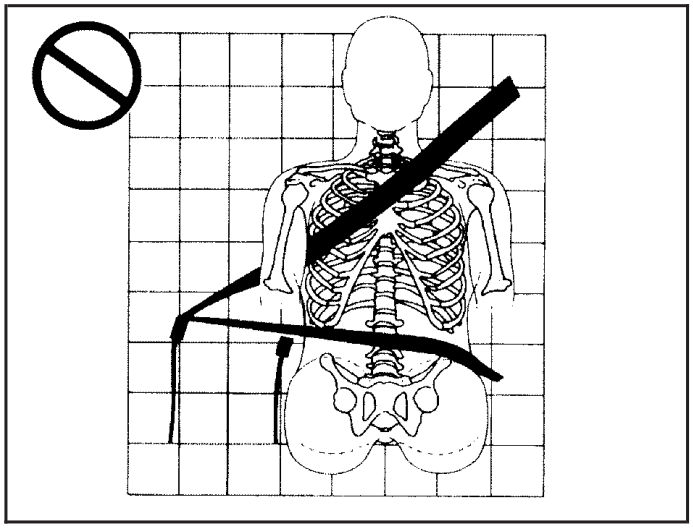

A: The belt is buckled in the wrong buckle.

⚠ WARNING:

You can be seriously injured if your belt is buckled in the wrong place like this. In a crash, the belt would go up over your abdomen. The belt forces would be there, not on the pelvic bones. This could cause serious internal injuries. Always buckle your belt into the buckle nearest you.

Downloaded from www.Manualslib.com manuals search engine

Q: What is wrong with this?

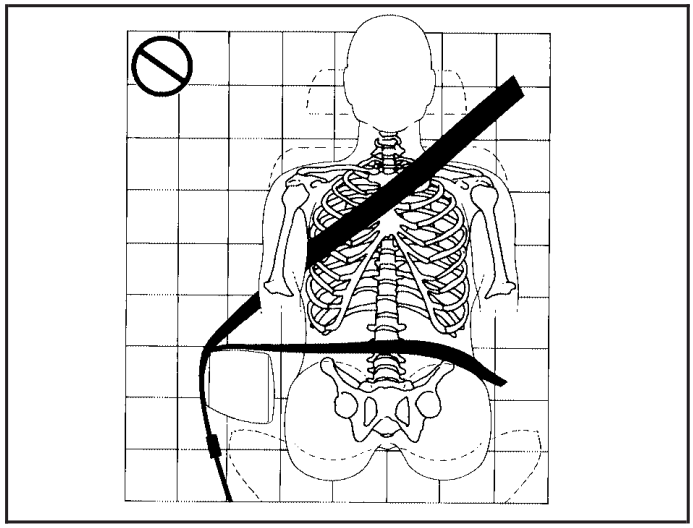

A: The belt is over an armrest.

⚠ WARNING:

You can be seriously injured if your belt goes over an armrest like this. The belt would be much too high. In a crash, you can slide under the belt. The belt force would then be applied on the abdomen, not on the pelvic bones, and that could cause serious or fatal injuries. Be sure the belt goes under the armrests.

Downloaded from www.Manualslib.com manuals search engine

Q: What is wrong with this?

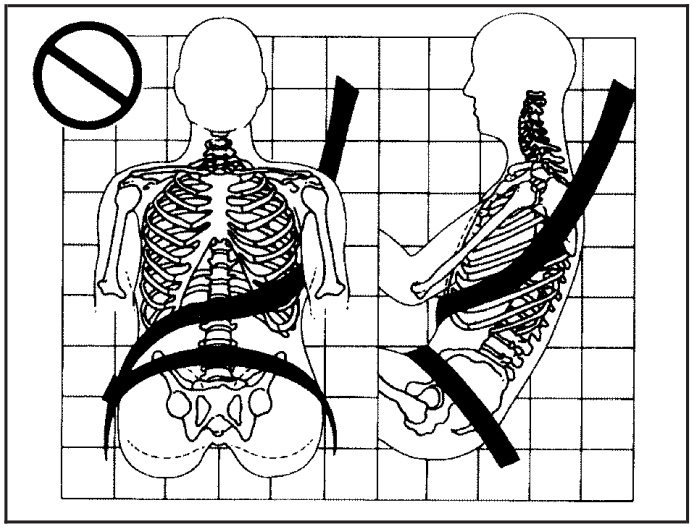

A: The shoulder belt is worn under the arm. It should be worn over the shoulder at all times.

⚠ WARNING:

You can be seriously injured if you wear the shoulder belt under your arm. In a crash, your body would move too far forward, which would increase the chance of head and neck injury. Also, the belt would apply too much force to the ribs, which are not as strong as shoulder bones. You could also severely injure internal organs like your liver or spleen. The shoulder belt should go over the shoulder and across the chest.

Downloaded from www.Manualslib.com manuals search engine

Q: What is wrong with this?

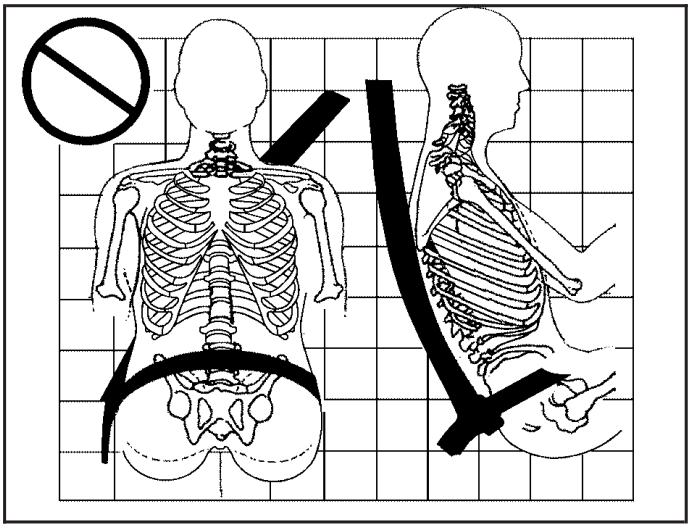

A: The belt is behind the body.

⚠ WARNING:

You can be seriously injured by not wearing the lap-shoulder belt properly. In a crash, you would not be restrained by the shoulder belt. Your body could move too far forward increasing the chance of head and neck injury. You might also slide under the lap belt. The belt force would then be applied right on the abdomen. That could cause serious or fatal injuries. The shoulder belt should go over the shoulder and across the chest.

Downloaded from www.Manualslib.com manuals search engine

Q: What is wrong with this?

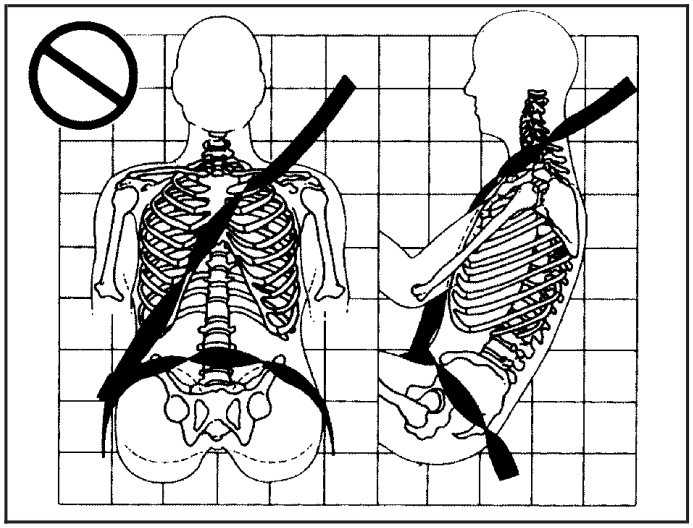

A: The belt is twisted across the body.

⚠ WARNING:

You can be seriously injured by a twisted belt. In a crash, you would not have the full width of the belt to spread impact forces. If a belt is twisted, make it straight so it can work properly, or ask your dealer/retailer to fix it.

Downloaded from www.Manualslib.com manuals search engine

Lap-Shoulder Belt

All seating positions in the vehicle have a lap-shoulder belt.

The following instructions explain how to wear a lap-shoulder belt properly.

1. Adjust the seat, if the seat is adjustable, so you can sit up straight. To see how, see “Seats” in the Index.
2. Pick up the latch plate and pull the belt across you. Do not let it get twisted.

   The lap-shoulder belt may lock if you pull the belt across you very quickly. If this happens, let the belt go back slightly to unlock it. Then pull the belt across you more slowly.

   If the shoulder portion of a passenger belt is pulled out all the way, the child restraint locking feature may be engaged. If this happens, just let the belt go back all the way and start again.

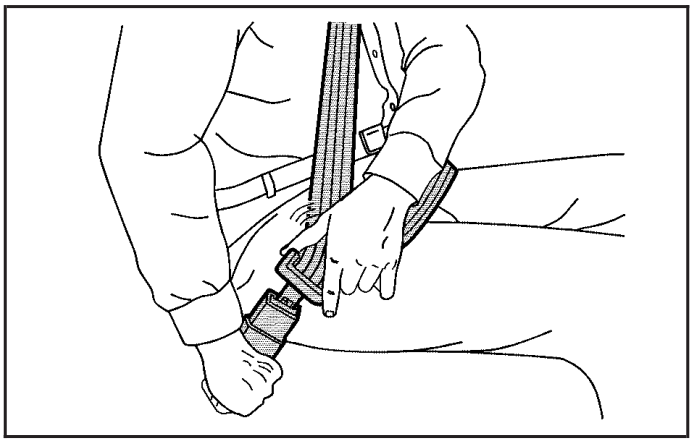

3. Push the latch plate into the buckle until it clicks.

   Pull up on the latch plate to make sure it is secure. If the belt is not long enough, see *Safety Belt Extender on page 2-22*.

   Position the release button on the buckle so that the safety belt could be quickly unbuckled if necessary.

Downloaded from www.Manualslib.com manuals search engine

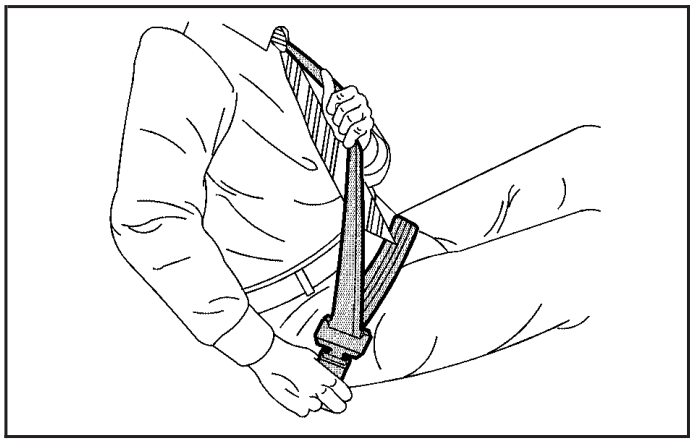

4. To make the lap part tight, pull up on the shoulder belt.

   It may be necessary to pull stitching on the safety belt through the latch plate to fully tighten the lap belt on smaller occupants.

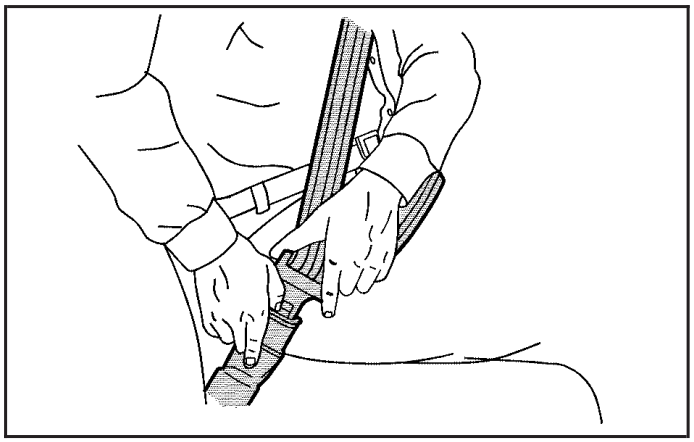

To unlatch the belt, push the button on the buckle. The belt should return to its stowed position. Slide the latch plate up the safety belt webbing when the safety belt is not in use. The latch plate should rest on the stitching on the safety belt, near the guide loop.

Before a door is closed, be sure the safety belt is out of the way. If a door is slammed against a safety belt, damage can occur to both the safety belt and the vehicle.

Downloaded from www.Manualslib.com manuals search engine

Safety Belt Pretensioners

This vehicle has safety belt pretensioners for front outboard occupants. Although the safety belt pretensioners cannot be seen, they are part of the safety belt assembly. They can help tighten the safety belts during the early stages of a moderate to severe frontal or near frontal crash if the threshold conditions for pretensioner activation are met.

Pretensioners work only once. If the pretensioners activate in a crash, they will need to be replaced, and probably other new parts for the vehicle's safety belt system. See *Replacing Restraint System Parts After a Crash on page 2-51*.

Safety Belt Use During Pregnancy

Safety belts work for everyone, including pregnant women. Like all occupants, they are more likely to be seriously injured if they do not wear safety belts.

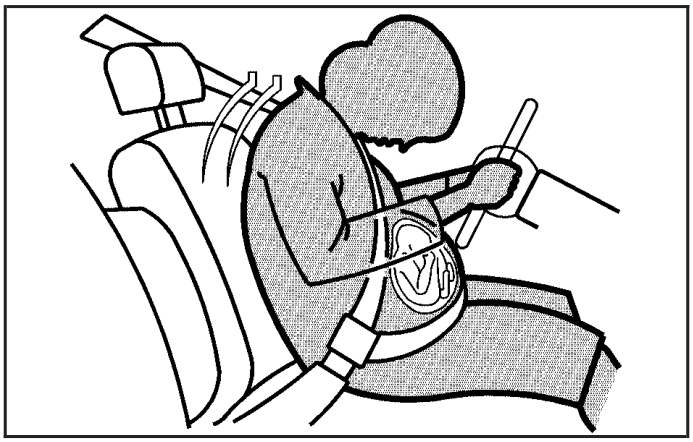

A pregnant woman should wear a lap-shoulder belt, and the lap portion should be worn as low as possible, below the rounding, throughout the pregnancy.

The best way to protect the fetus is to protect the mother. When a safety belt is worn properly, it is more likely that the fetus will not be hurt in a crash. For pregnant women, as for anyone, the key to making safety belts effective is wearing them properly.

Downloaded from www.Manualslib.com manuals search engine

Safety Belt Extender

If the vehicle's safety belt will fasten around you, you should use it.

But if a safety belt is not long enough, your dealer/retailer will order you an extender. When you go in to order it, take the heaviest coat you will wear, so the extender will be long enough for you. To help avoid personal injury, do not let someone else use it, and use it only for the seat it is made to fit. The extender has been designed for adults. Never use it for securing child seats. To wear it, attach it to the regular safety belt. For more information, see the instruction sheet that comes with the extender.

Child Restraints

Older Children

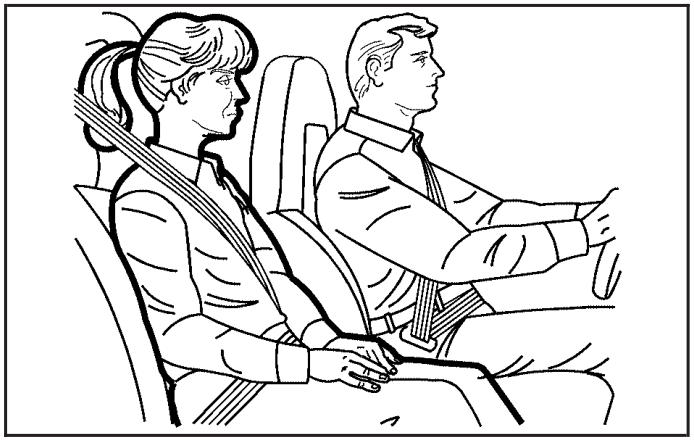

Older children who have outgrown booster seats should wear the vehicle's safety belts.

Downloaded from www.Manualslib.com manuals search engine

The manufacturer's instructions that come with the booster seat, state the weight and height limitations for that booster. Use a booster seat with a lap-shoulder belt until the child passes the below fit test:

- Sit all the way back on the seat. Do the knees bend at the seat edge? If yes, continue. If no, return to the booster seat.
- Buckle the lap-shoulder belt. Does the shoulder belt rest on the shoulder? If yes, continue. If no, then return to the booster seat.
- Does the lap belt fit low and snug on the hips, touching the thighs? If yes, continue. If no, return to the booster seat.
- Can proper safety belt fit be maintained for the length of the trip? If yes, continue. If no, return to the booster seat.

Q: What is the proper way to wear safety belts?

A: An older child should wear a lap-shoulder belt and get the additional restraint a shoulder belt can provide. The shoulder belt should not cross the face or neck. The lap belt should fit snugly below the hips, just touching the top of the thighs. This applies belt force to the child's pelvic bones in a crash. It should never be worn over the abdomen, which could cause severe or even fatal internal injuries in a crash.

According to accident statistics, children and infants are safer when properly restrained in rear seating positions than in the front seating positions.

In a crash, children who are not buckled up can strike other people who are buckled up, or can be thrown out of the vehicle. Older children need to use safety belts properly.

Downloaded from www.Manualslib.com manuals search engine

⚠ WARNING:

Never do this.

Never allow two children to wear the same safety belt. The safety belt can not properly spread the impact forces. In a crash, the two children can be crushed together and seriously injured. A safety belt must be used by only one person at a time.

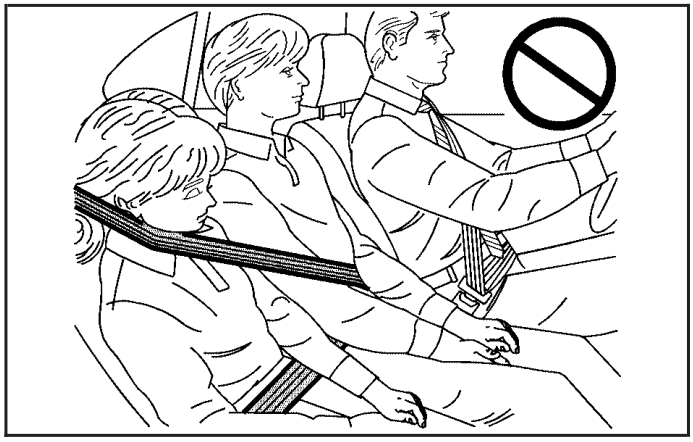

⚠ WARNING:

Never do this.

Never allow a child to wear the safety belt with the shoulder belt behind their back. A child can be seriously injured by not wearing the lap-shoulder belt properly. In a crash, the child would not be restrained by the shoulder belt. The child could move too far forward increasing the chance of head and neck injury. The child might also slide under the lap belt. The belt force would then be applied right on the abdomen. That could cause serious or fatal injuries. The shoulder belt should go over the shoulder and across the chest.

Downloaded from www.Manualslib.com manuals search engine

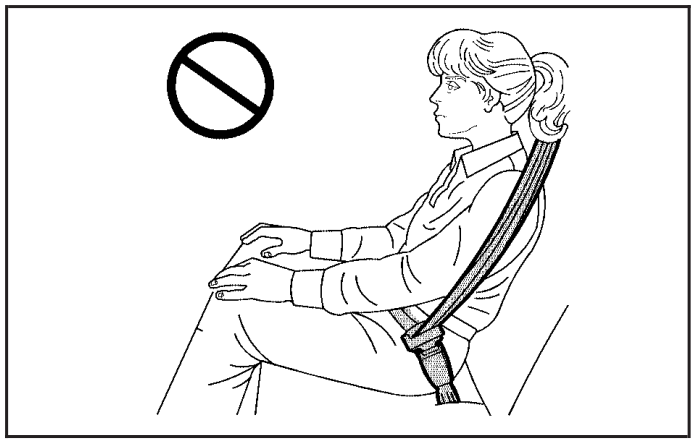

Infants and Young Children

Everyone in a vehicle needs protection! This includes infants and all other children. Neither the distance traveled nor the age and size of the traveler changes the need, for everyone, to use safety restraints. In fact, the law in every state in the United States and in every Canadian province says children up to some age must be restrained while in a vehicle.

⚠ WARNING:

Children can be seriously injured or strangled if a shoulder belt is wrapped around their neck and the safety belt continues to tighten. Never leave children unattended in a vehicle and never allow children to play with the safety belts.

Airbags plus lap-shoulder belts offer protection for adults and older children, but not for young children and infants. Neither the vehicle's safety belt system nor its airbag system is designed for them. Every time infants and young children ride in vehicles, they should have the protection provided by appropriate child restraints.

Children who are not restrained properly can strike other people, or can be thrown out of the vehicle.

Downloaded from www.Manualslib.com manuals search engine

⚠ WARNING:

Never do this.

Never hold an infant or a child while riding in a vehicle. Due to crash forces, an infant or a child will become so heavy it is not possible to hold it during a crash. For example, in a crash at only 40 km/h (25 mph), a 5.5 kg (12 lb) infant will suddenly become a 110 kg (240 lb) force on a person's arms. An infant should be secured in an appropriate restraint.

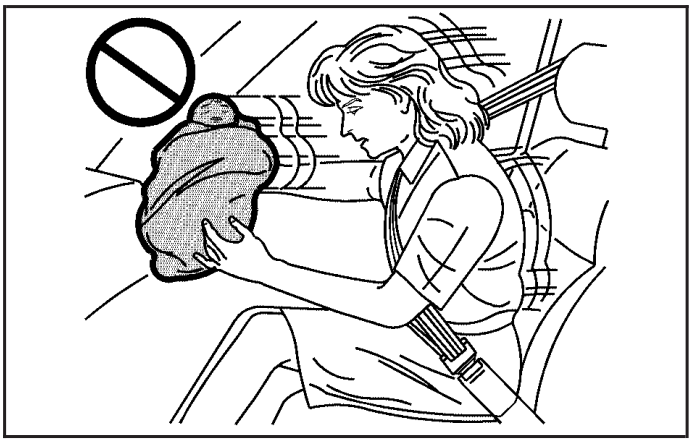

Downloaded from www.Manualslib.com manuals search engine

⚠ WARNING:

Never do this.

Children who are up against, or very close to, any airbag when it inflates can be seriously injured or killed. Never put a rear-facing child restraint in the right front seat. Secure a rear-facing child restraint in a rear seat. It is also better to secure a forward-facing child restraint in a rear seat. If you must secure a forward-facing child restraint in the right front seat, always move the front passenger seat as far back as it will go.

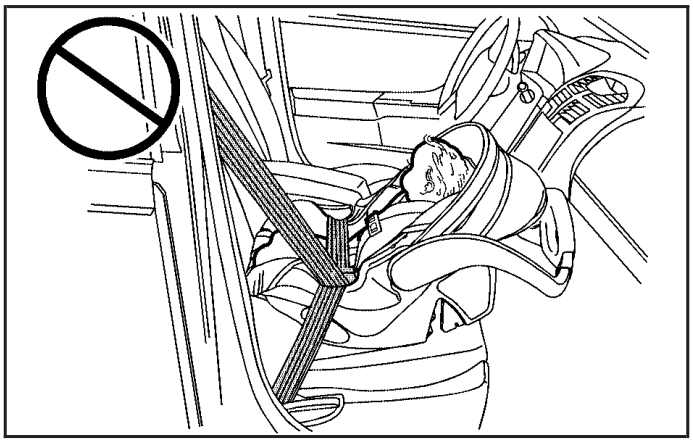

Downloaded from www.Manualslib.com manuals search engine

Q: What are the different types of add-on child restraints?

A: Add-on child restraints, which are purchased by the vehicle's owner, are available in four basic types. Selection of a particular restraint should take into consideration not only the child's weight, height, and age but also whether or not the restraint will be compatible with the motor vehicle in which it will be used.

For most basic types of child restraints, there are many different models available. When purchasing a child restraint, be sure it is designed to be used in a motor vehicle. If it is, the restraint will have a label saying that it meets federal motor vehicle safety standards.

The restraint manufacturer's instructions that come with the restraint state the weight and height limitations for a particular child restraint. In addition, there are many kinds of restraints available for children with special needs.

⚠ WARNING:

To reduce the risk of neck and head injury during a crash, infants need complete support. This is because an infant's neck is not fully developed and its head weighs so much compared with the rest of its body. In a crash, an infant in a rear-facing child restraint settles into the restraint, so the crash forces can be distributed across the strongest part of an infant's body, the back and shoulders. Infants should always be secured in rear-facing child restraints.

Downloaded from www.Manualslib.com manuals search engine

⚠ WARNING:

A young child's hip bones are still so small that the vehicle's regular safety belt may not remain low on the hip bones, as it should. Instead, it may settle up around the child's abdomen. In a crash, the belt would apply force on a body area that is unprotected by any bony structure. This alone could cause serious or fatal injuries. To reduce the risk of serious or fatal injuries during a crash, young children should always be secured in appropriate child restraints.

Child Restraint Systems

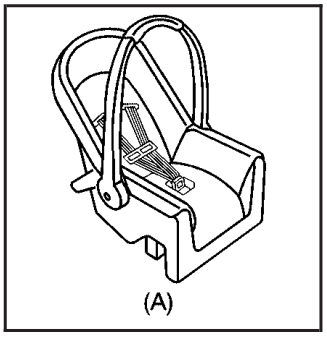

A rear-facing infant seat (A) provides restraint with the seating surface against the back of the infant.

The harness system holds the infant in place and, in a crash, acts to keep the infant positioned in the restraint.

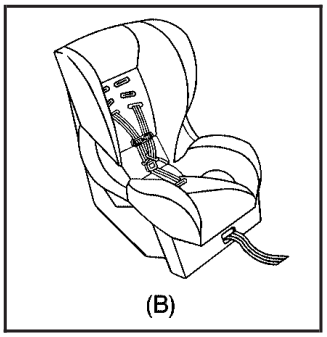

A forward-facing child seat (B) provides restraint for the child's body with the harness.

Downloaded from www.Manualslib.com manuals search engine

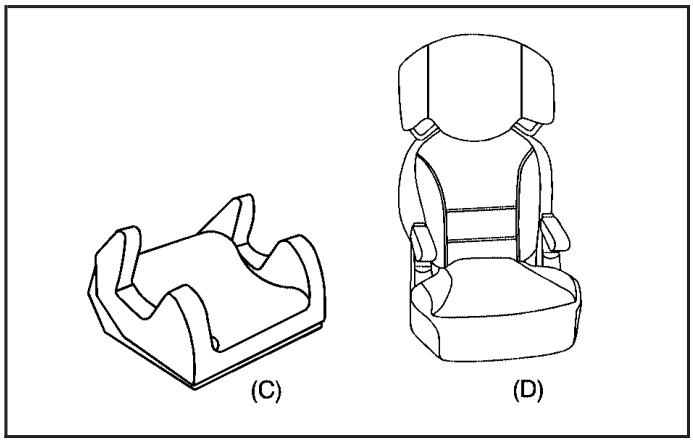

A booster seat (C-D) is a child restraint designed to improve the fit of the vehicle's safety belt system. A booster seat can also help a child to see out the window.

Securing an Add-on Child Restraint in the Vehicle

⚠ WARNING:

A child can be seriously injured or killed in a crash if the child restraint is not properly secured in the vehicle. Secure the child restraint properly in the vehicle using the vehicle's safety belt, following the instructions that came with that child restraint and the instructions in this manual.

To help reduce the chance of injury, the child restraint must be secured in the vehicle. Child restraint systems must be secured in vehicle seats by lap belts or the lap belt portion of a lap-shoulder belt. A child can be endangered in a crash if the child restraint is not properly secured in the vehicle.

Downloaded from www.Manualslib.com manuals search engine

When securing an add-on child restraint, refer to the instructions that come with the restraint which may be on the restraint itself or in a booklet, or both, and to this manual. The child restraint instructions are important, so if they are not available, obtain a replacement copy from the manufacturer.

Keep in mind that an unsecured child restraint can move around in a collision or sudden stop and injure people in the vehicle. Be sure to properly secure any child restraint in your vehicle — even when no child is in it.

Securing the Child Within the Child Restraint

⚠ WARNING:

A child can be seriously injured or killed in a crash if the child is not properly secured in the child restraint. Secure the child properly following the instructions that came with that child restraint.

Lower Anchors and Tethers for Children (LATCH)

Some child restraints have a LATCH system. As part of the LATCH system, your child restraint may have lower attachments and/or a top tether. The LATCH system can help hold the child restraint in place during driving or in a crash. Some vehicles have lower and/or top tether anchors designed to secure a child restraint with lower attachments and/or a top tether.

Some child restraints with a top tether are designed to be used whether the top tether is anchored or not. Other child restraints require that the top tether be anchored. A national or local law may require that the top tether be anchored.

In Canada, the law requires that forward-facing child restraints have a top tether, and that the tether be attached.

Your vehicle does not have lower anchors or top tether anchors to secure a child restraint with the LATCH system. If a national or local law requires that your top tether be anchored, do not use a child restraint in this vehicle because a top tether cannot be properly anchored. You must use the safety belts to secure your child restraint in this vehicle, unless a national or local law requires that the top tether be anchored. Refer to your child restraint instructions and instructions in this manual for securing a child restraint using the vehicle's safety belts.

Downloaded from www.Manualslib.com manuals search engine

Securing a Child Restraint in the Right Front Seat Position

This vehicle has airbags. In addition, the vehicle has a passenger sensing system which is designed to turn off the right front passenger frontal airbag under certain conditions. See *Passenger Sensing System on page 2-43* and *Passenger Airbag Status Indicator on page 4-22* for more information on this, including important safety information.

A label on the sun visor says, “Never put a rear-facing child seat in the front.” This is because the risk to the rear-facing child is so great, if the airbag deploys.

⚠ WARNING:

A child in a rear-facing child restraint can be seriously injured or killed if the right front passenger airbag inflates. This is because the back of the rear-facing child restraint would be

WARNING: (Continued)

WARNING: (Continued)

very close to the inflating airbag. A child in a forward-facing child restraint can be seriously injured or killed if the right front passenger airbag inflates and the passenger seat is in a forward position.

Even if the passenger sensing system has turned off the right front passenger frontal airbag, no system is fail-safe. No one can guarantee that an airbag will not deploy under some unusual circumstance, even though it is turned off.

Secure rear-facing child restraints in a rear seat, even if the airbag is off. If you secure a forward-facing child restraint in the right front seat, always move the front passenger seat as far back as it will go. It is better to secure the child restraint in a rear seat.

See *Passenger Sensing System on page 2-43* for additional information.

Downloaded from www.Manualslib.com manuals search engine

Rear-facing child restraints should not be installed in the vehicle, even if the airbag is off.

If the child restraint has the LATCH system, see *Lower Anchors and Tethers for Children (LATCH) on page 2-31* for how to install your child restraint using LATCH. If you secure a child restraint using a safety belt and it uses a top tether, see *Lower Anchors and Tethers for Children (LATCH) on page 2-31* for top tether anchor locations.

Do not secure a child seat in a position without a top tether anchor if a national or local law requires that the top tether be anchored, or if the instructions that come with the child restraint say that the top strap must be anchored.

In Canada, the law requires that forward-facing child restraints have a top tether, and that the tether be attached.

You will be using the lap-shoulder belt to secure the child restraint in this position. Follow the instructions that came with the child restraint.

1. Move the seat as far back as it will go before securing the forward-facing child restraint.

   When the passenger sensing system has turned off the right front passenger frontal airbag, the off indicator should light and stay lit when you start the vehicle. See *Passenger Airbag Status Indicator on page 4-22*.

2. Put the child restraint on the seat.
3. Pick up the latch plate, and run the lap and shoulder portions of the vehicle's safety belt through or around the restraint. The child restraint instructions will show you how.

Downloaded from www.Manualslib.com manuals search engine

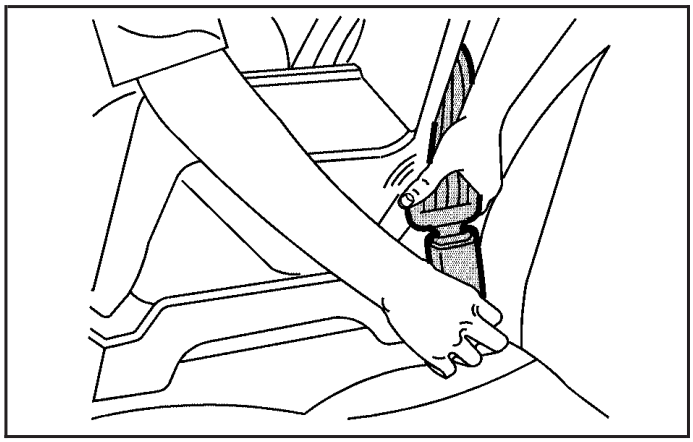

4. Push the latch plate into the buckle until it clicks. Position the release button on the buckle so the safety belt could be quickly unbuckled if necessary.

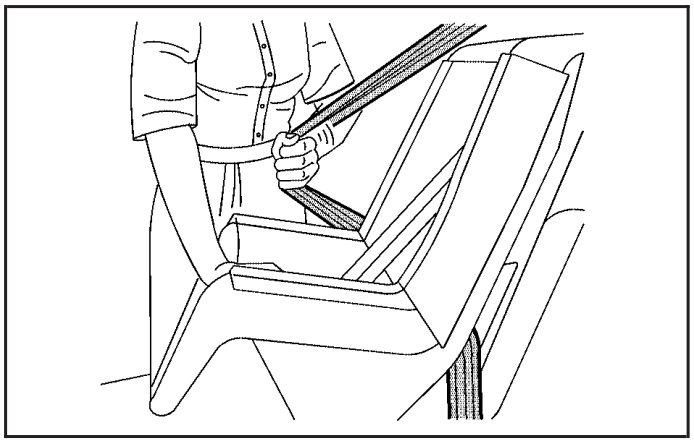

5. Pull the rest of the shoulder belt all the way out of the retractor to set the lock.

Downloaded from www.Manualslib.com manuals search engine

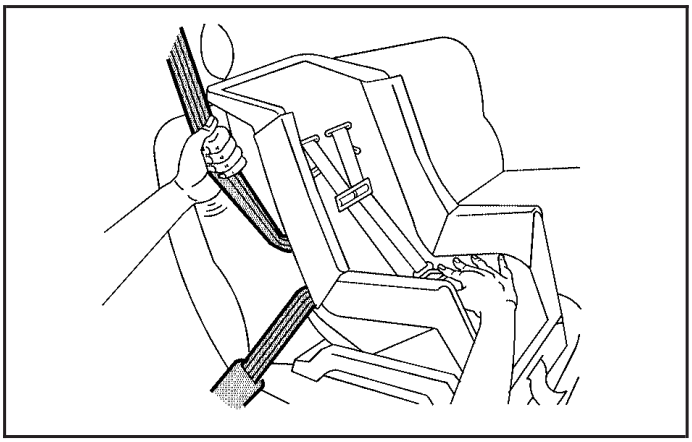

6. To tighten the belt, push down on the child restraint, pull the shoulder portion of the belt to tighten the lap portion of the belt and feed the shoulder belt back into the retractor. When installing a forward-facing child restraint, it may be helpful to use your knee to push down on the child restraint as you tighten the belt.
7. If the child restraint has a top tether anchor, follow the child restraint manufacturer's instructions regarding the use of the top tether. See *Lower Anchors and Tethers for Children (LATCH) on page 2-31* for more information.
8. Push and pull the child restraint in different directions to be sure it is secure.

If the airbag is off, the off indicator in the passenger airbag status indicator will come on and stay on when the vehicle is started.

If a child restraint has been installed and the on indicator is lit, see "If the On Indicator is Lit for a Child Restraint" under *Passenger Sensing System on page 2-43* for more information.

To remove the child restraint, unbuckle the vehicle safety belt and let it return to the stowed position.

Downloaded from www.Manualslib.com manuals search engine

Airbag System

The vehicle has the following airbags:

- A frontal airbag for the driver.
- A frontal airbag for the right front passenger.

For frontal airbags, the word AIRBAG will appear on the middle part of the steering wheel for the driver and on the instrument panel for the right front passenger.

Airbags are designed to supplement the protection provided by safety belts. Even though today's airbags are also designed to help reduce the risk of injury from the force of an inflating bag, all airbags must inflate very quickly to do their job.

Here are the most important things to know about the airbag system:

⚠ WARNING:

You can be severely injured or killed in a crash if you are not wearing your safety belt — even if you have airbags. Airbags are designed to work with safety belts, but do not replace them. Also, airbags are not designed to deploy in every crash. In some crashes safety belts are your only restraint. See *When Should an Airbag Inflate? on page 2-39*.

Wearing your safety belt during a crash helps reduce your chance of hitting things inside the vehicle or being ejected from it. Airbags are "supplemental restraints" to the safety belts. Everyone in your vehicle should wear a safety belt properly — whether or not there is an airbag for that person.

Downloaded from www.Manualslib.com manuals search engine

⚠ WARNING:

Airbags inflate with great force, faster than the blink of an eye. Anyone who is up against, or very close to, any airbag when it inflates can be seriously injured or killed. Do not sit unnecessarily close to the airbag, as you would be if you were sitting on the edge of your seat or leaning forward. Safety belts help keep you in position before and during a crash. Always wear your safety belt, even with airbags. The driver should sit as far back as possible while still maintaining control of the vehicle.

⚠ WARNING:

Children who are up against, or very close to, any airbag when it inflates can be seriously injured or killed. Airbags plus lap-shoulder belts offer protection for adults and older children, but not for young children and infants. Neither the vehicle's safety belt system nor its airbag system is designed for them. Young children and infants need the protection that a child restraint system can provide. Always secure children properly in your vehicle. To read how, see *Older Children on page 2-22* or *Infants and Young Children on page 2-25*.

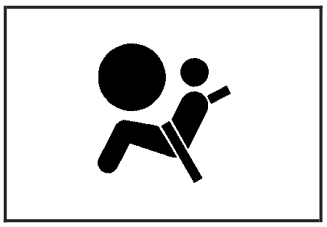

There is an airbag readiness light on the instrument panel cluster, which shows the airbag symbol.

The system checks the airbag electrical system for malfunctions. The light tells you if there is an electrical problem. See *Airbag Readiness Light on page 4-21* for more information.

Downloaded from www.Manualslib.com manuals search engine

Where Are the Airbags?

The driver's frontal airbag is in the middle of the steering wheel.

The right front passenger's airbag is in the instrument panel on the passenger's side.

Downloaded from www.Manualslib.com manuals search engine

⚠ WARNING:

If something is between an occupant and an airbag, the bag might not inflate properly or it might force the object into that person causing severe injury or even death. The path of an inflating airbag must be kept clear. Do not put anything between an occupant and an airbag, and do not attach or put anything on the steering wheel hub or on or near any other airbag covering.

When Should an Airbag Inflate?

Frontal airbags are designed to inflate in moderate to severe frontal or near-frontal crashes to help reduce the potential for severe injuries mainly to the driver's or right front passenger's head and chest. However, they are only designed to inflate if the impact exceeds a predetermined deployment threshold. Deployment thresholds are used to predict how severe a crash is likely to be in time for the airbags to inflate and help restrain the occupants.

Whether your frontal airbags will or should deploy is not based on how fast your vehicle is traveling. It depends largely on what you hit, the direction of the impact, and how quickly your vehicle slows down.

Frontal airbags may inflate at different crash speeds. For example:

- If the vehicle hits a stationary object, the airbags could inflate at a different crash speed than if the vehicle hits a moving object.
- If the vehicle hits an object that deforms, the airbags could inflate at a different crash speed than if the vehicle hits an object that does not deform.
- If the vehicle hits a narrow object (like a pole), the airbags could inflate at a different crash speed than if the vehicle hits a wide object (like a wall).
- If the vehicle goes into an object at an angle, the airbags could inflate at a different crash speed than if the vehicle goes straight into the object.

Thresholds can also vary with specific vehicle design.

Downloaded from www.Manualslib.com manuals search engine

In addition, your vehicle has dual-stage frontal airbags. Dual-stage airbags adjust the restraint according to crash severity. Your vehicle has electronic frontal sensors, which help the sensing system distinguish between a moderate frontal impact and a more severe frontal impact. For moderate frontal impacts, dual-stage airbags inflate at a level less than full deployment. For more severe frontal impacts, full deployment occurs.

Frontal airbags are not intended to inflate during vehicle rollovers, rear impacts, or in many side impacts.

In any particular crash, no one can say whether an airbag should have inflated simply because of the damage to a vehicle or because of what the repair costs were. For frontal airbags, inflation is determined by what the vehicle hits, the angle of the impact, and how quickly the vehicle slows down.

What Makes an Airbag Inflate?

In a deployment event, the sensing system sends an electrical signal triggering a release of gas from the inflator. Gas from the inflator fills the airbag causing the bag to break out of the cover and deploy. The inflator, the airbag, and related hardware are all part of the airbag module.

Frontal airbag modules are located inside the steering wheel and instrument panel.

How Does an Airbag Restrain?

In moderate to severe frontal or near frontal collisions, even belted occupants can contact the steering wheel or the instrument panel. In moderate to severe side collisions, even belted occupants can contact the inside of the vehicle.

Airbags supplement the protection provided by safety belts. Frontal airbags distribute the force of the impact more evenly over the occupant's upper body, stopping the occupant more gradually.

But airbags would not help in many types of collisions, primarily because the occupant's motion is not toward those airbags. See *When Should an Airbag Inflate? on page 2-39* for more information.

Airbags should never be regarded as anything more than a supplement to safety belts.

Downloaded from www.Manualslib.com manuals search engine

What Will You See After an Airbag Inflates?

After the frontal airbags inflate, they quickly deflate, so quickly that some people may not even realize the airbags inflated. Some components of the airbag module may be hot for several minutes. For location of the airbag modules, see *What Makes an Airbag Inflate? on page 2-40*.

The parts of the airbag that come into contact with you may be warm, but not too hot to touch. There may be some smoke and dust coming from the vents in the deflated airbags. Airbag inflation does not prevent the driver from seeing out of the windshield or being able to steer the vehicle, nor does it prevent people from leaving the vehicle.

⚠ WARNING:

When an airbag inflates, there may be dust in the air. This dust could cause breathing problems for people with a history of asthma or other breathing trouble. To avoid this, everyone in the vehicle should get out as soon as it is safe to do so. If you have breathing problems but cannot get out of the vehicle after an airbag inflates, then get fresh air by opening a window or a door. If you experience breathing problems following an airbag deployment, you should seek medical attention.

The vehicle has a feature that may automatically unlock the doors, turn the interior lamps and hazard warning flashers, and shut off the fuel system after the airbags inflate.

Downloaded from www.Manualslib.com manuals search engine

You can lock the doors, turn off the interior lamps and hazard warning flashers by using the controls for those features.

⚠ WARNING:

A crash severe enough to inflate the airbags may have also damaged important functions in the vehicle, such as the fuel system, brake and steering systems, etc. Even if the vehicle appears to be drivable after a moderate crash, there may be concealed damage that could make it difficult to safely operate the vehicle.

Use caution if you should attempt to restart the engine after a crash has occurred.

In many crashes severe enough to inflate the airbag, windshields are broken by vehicle deformation. Additional windshield breakage may also occur from the right front passenger airbag.

- Airbags are designed to inflate only once. After an airbag inflates, you will need some new parts for the airbag system. If you do not get them, the airbag system will not be there to help protect you in another crash. A new system will include airbag modules and possibly other parts. The service manual for your vehicle covers the need to replace other parts.
- Your vehicle has a crash sensing and diagnostic module which records information after a crash. See *Vehicle Data Recording and Privacy on page 8-18* and *Event Data Recorders on page 8-19*.
- Let only qualified technicians work on the airbag system. Improper service can mean that the airbag system will not work properly. See your dealer/retailer for service.

Downloaded from www.Manualslib.com manuals search engine

Passenger Sensing System

The vehicle has a passenger sensing system for the right front passenger position. The passenger airbag status indicator will be visible on the instrument panel when the vehicle is started.

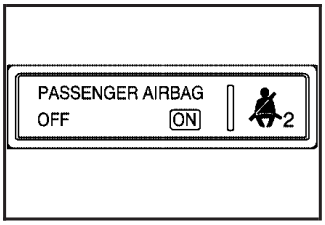

United States

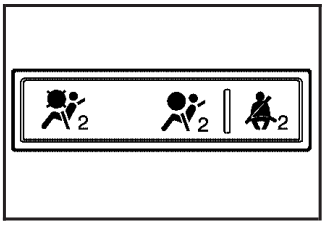

Canada

The words ON and OFF, or the symbol for on and off, will be visible during the system check. If you are using remote start to start the vehicle from a distance, if equipped, you may not see the system check. When the system check is complete, either the word ON or OFF, or the symbol for on or off, will be visible. See *Passenger Airbag Status Indicator on page 4-22*.

The passenger sensing system will turn off the right front passenger frontal airbag under certain conditions. The driver airbag is not affected by the passenger sensing system.

The passenger sensing system works with sensors that are part of the right front passenger seat. The sensors are designed to detect the presence of a properly-seated occupant and determine if the right front passenger frontal airbag should be enabled (may inflate) or not.

According to accident statistics, children are safer when properly secured in a rear seat in the correct child restraint for their weight and size. We recommend that rear-facing child restraints not be transported in the vehicle, even if the airbag is off.

Downloaded from www.Manualslib.com manuals search engine

A label on the sun visor says, “Never put a rear-facing child seat in the front.” This is because the risk to the rear-facing child is so great, if the airbag deploys.

⚠ WARNING:

A child in a rear-facing child restraint can be seriously injured or killed if the right front passenger airbag inflates. This is because the back of the rear-facing child restraint would be very close to the inflating airbag. A child in a forward-facing child restraint can be seriously injured or killed if the right front passenger airbag inflates and the passenger seat is in a forward position.

Even if the passenger sensing system has turned off the right front passenger frontal airbag, no system is fail-safe. No one can guarantee that an airbag will not deploy under some unusual circumstance, even though the airbag is turned off.

WARNING: (Continued)

WARNING: (Continued)

Secure rear-facing child restraints in a rear seat, even if the airbag is off. If you secure a forward-facing child restraint in the right front seat, always move the front passenger seat as far back as it will go. It is better to secure the child restraint in a rear seat.

The passenger sensing system is designed to turn off the right front passenger airbag if:

- The right front passenger seat is unoccupied.
- The system determines that an infant is present in a rear-facing infant seat.
- The system determines that a small child is present in a child restraint.
- The system determines that a small child is present in a booster seat.
- A right front passenger takes his/her weight off of the seat for a period of time.
- The right front passenger seat is occupied by a smaller person, such as a child who has outgrown child restraints.
- Or, if there is a critical problem with the airbag system or the passenger sensing system.

Downloaded from www.Manualslib.com manuals search engine

When the passenger sensing system has turned off the right front passenger frontal airbag, the off indicator will light and stay lit to remind you that the airbag is off. See *Passenger Airbag Status Indicator on page 4-22*.

The passenger sensing system is designed to enable (may inflate) the right front passenger frontal airbag anytime the system senses that a person of adult size is sitting properly in the right front passenger seat. When the passenger sensing system has allowed the airbag to be enabled, the on indicator will light and stay lit to remind you that the airbag is active.

For some children who have outgrown child restraints and for very small adults, the passenger sensing system may or may not turn off the right front passenger frontal airbag, depending upon the person's seating posture and body build. Everyone in the vehicle who has outgrown child restraints should wear a safety belt properly — whether or not there is an airbag for that person.

⚠ WARNING:

If the airbag readiness light ever comes on and stays on, it means that something may be wrong with the airbag system. To help avoid injury to yourself or others, have the vehicle serviced right away. See *Airbag Readiness Light on page 4-21* for more information, including important safety information.

Downloaded from www.Manualslib.com manuals search engine

If the On Indicator is Lit for a Child Restraint

If a child restraint has been installed and the on indicator is lit:

1. Turn the vehicle off.
2. Remove the child restraint from the vehicle.
3. Remove any additional items from the seat such as blankets, cushions, seat covers, seat heaters, or seat massagers.
4. Reinstall the child restraint following the directions provided by the child restraint manufacturer and refer to *Securing a Child Restraint in the Right Front Seat Position on page 2-32*.
5. If, after reinstalling the child restraint and restarting the vehicle, the on indicator is still lit, turn the vehicle off. Then slightly recline the vehicle seatback and adjust the seat cushion, if adjustable, to make sure that the vehicle seatback is not pushing the child restraint into the seat cushion.
6. Restart the vehicle.

   If the on indicator is still lit, do not install a child restraint in this vehicle and check with your dealer/retailer.

If the Off Indicator is Lit for an Adult-Size Occupant

If a person of adult-size is sitting in the right front passenger seat, but the off indicator is lit, it could be because that person is not sitting properly in the seat.

Downloaded from www.Manualslib.com manuals search engine

If this happens, use the following steps to allow the system to detect that person and enable the right front passenger frontal airbag:

1. Turn the vehicle off.
2. Remove any additional material from the seat, such as blankets, cushions, seat covers, seat heaters, or seat massagers.
3. Place the seatback in the fully upright position.
4. Have the person sit upright in the seat, centered on the seat cushion, with legs comfortably extended.
5. Restart the vehicle and have the person remain in this position for two to three minutes after the on indicator is lit.

Additional Factors Affecting System Operation

Safety belts help keep the passenger in position on the seat during vehicle maneuvers and braking, which helps the passenger sensing system maintain the passenger airbag status. See “Safety Belts” and “Child Restraints” in the Index for additional information about the importance of proper restraint use.

A thick layer of additional material, such as a blanket or cushion, or aftermarket equipment such as seat covers, seat heaters, and seat massagers can affect how well the passenger sensing system operates. We recommend that you not use seat covers or other aftermarket equipment except when approved by GM for your specific vehicle. See *Adding Equipment to Your Airbag-Equipped Vehicle on page 2-48* for more information about modifications that can affect how the system operates.

⚠ WARNING:

Stowing of articles under the passenger seat or between the passenger seat cushion and seatback may interfere with the proper operation of the passenger sensing system.

Downloaded from www.Manualslib.com manuals search engine

Servicing Your Airbag-Equipped Vehicle

Airbags affect how the vehicle should be serviced. There are parts of the airbag system in several places around the vehicle. Your dealer/retailer and the service manual have information about servicing the vehicle and the airbag system. To purchase a service manual, see *Service Publications Ordering Information on page 8-17*.

⚠ WARNING:

For up to 10 seconds after the ignition is turned off and the battery is disconnected, an airbag can still inflate during improper service. You can be injured if you are close to an airbag when it inflates. Avoid yellow connectors. They are probably part of the airbag system. Be sure to follow proper service procedures, and make sure the person performing work for you is qualified to do so.

Adding Equipment to Your Airbag-Equipped Vehicle

Q: Is there anything I might add to or change about the vehicle that could keep the airbags from working properly?

A: Yes. If you add things that change your vehicle's frame, bumper system, height, front end or side sheet metal, they may keep the airbag system from working properly. Changing or moving any parts of the front seats, safety belts, the airbag sensing and diagnostic module, steering wheel, instrument panel, front sensors, or airbag wiring can affect the operation of the airbag system.

Downloaded from www.Manualslib.com manuals search engine

In addition, the vehicle has a passenger sensing system for the right front passenger position, which includes sensors that are part of the passenger seat. The passenger sensing system may not operate properly if the original seat trim is replaced with non-GM covers, upholstery or trim, or with GM covers, upholstery or trim designed for a different vehicle. Any object, such as an aftermarket seat heater or a comfort enhancing pad or device, installed under or on top of the seat fabric, could also interfere with the operation of the passenger sensing system. This could either prevent proper deployment of the passenger airbag(s) or prevent the passenger sensing system from properly turning off the passenger airbag(s). See *Passenger Sensing System on page 2-43*.

If you have any questions about this, you should contact Customer Assistance before you modify your vehicle. The phone numbers and addresses for Customer Assistance are in Step Two of the Customer Satisfaction Procedure in this manual. See *Customer Satisfaction Procedure on page 8-2*.

Q: Because I have a disability, I have to get my vehicle modified. How can I find out whether this will affect my airbag system?

A: If you have questions, call Customer Assistance. The phone numbers and addresses for Customer Assistance are in Step Two of the Customer Satisfaction Procedure in this manual. See *Customer Satisfaction Procedure on page 8-2*.

In addition, your dealer/retailer and the service manual have information about the location of the airbag sensors, sensing and diagnostic module and airbag wiring.

Downloaded from www.Manualslib.com manuals search engine

Restraint System Check

Checking the Restraint Systems

Safety Belts

Now and then, check that the safety belt reminder light, safety belts, buckles, latch plates, retractors, and anchorages are all working properly.

Look for any other loose or damaged safety belt system parts that might keep a safety belt system from doing its job. See your dealer/retailer to have it repaired. Torn or frayed safety belts may not protect you in a crash. They can rip apart under impact forces. If a belt is torn or frayed, get a new one right away.

Make sure the safety belt reminder light is working. See *Safety Belt Reminders on page 4-20* for more information.

Keep safety belts clean and dry. See *Care of Safety Belts on page 6-93*.

Airbags

The airbag system does not need regularly scheduled maintenance or replacement. Make sure the airbag readiness light is working. See *Airbag Readiness Light on page 4-21* for more information.

Notice: **If an airbag covering is damaged, opened, or broken, the airbag may not work properly. Do not open or break the airbag coverings. If there are any opened or broken airbag covers, have the airbag covering and/or airbag module replaced. For the location of the airbag modules, see *What Makes an Airbag Inflate? on page 2-40*. See your dealer/retailer for service.**

Downloaded from www.Manualslib.com manuals search engine

Replacing Restraint System Parts After a Crash

⚠ WARNING:

A crash can damage the restraint systems in your vehicle. A damaged restraint system may not properly protect the person using it, resulting in serious injury or even death in a crash. To help make sure your restraint systems are working properly after a crash, have them inspected and any necessary replacements made as soon as possible.

If you have had a crash, do you need new belts?

After a very minor crash, nothing may be necessary. But the belt assemblies that were used during any crash may have been stressed or damaged. See your dealer/retailer to have your safety belt assemblies inspected or replaced.

New parts and repairs may be necessary even if the belt was not being used at the time of the crash.

If an airbag inflates, you will need to replace airbag system parts. See the part on the airbag system earlier in this section.

Have your safety belt pretensioners checked if your vehicle has been in a crash, or if your airbag readiness light stays on after you start your vehicle or while you are driving. See *Airbag Readiness Light on page 4-21*.

Downloaded from www.Manualslib.com manuals search engine

✍ NOTES

Downloaded from www.Manualslib.com manuals search engine

Section 3 Features and Controls

Keys 3-2
Remote Keyless Entry (RKE) System 3-3
Remote Keyless Entry (RKE) System Operation 3-4
Remote Vehicle Start 3-6

Doors and Locks 3-8
Manual Door Locks 3-8
Power Door Locks 3-9
Delayed Locking 3-9
Automatic Door Lock 3-9
Automatic Door Unlock 3-9
Trunk 3-10

Windows 3-12
Manual Windows 3-13
Power Windows 3-13
Sun Visors 3-14

Theft-Deterrent Systems 3-14
Content Theft-Deterrent 3-14
PASS-Key® III+ Electronic Immobilizer 3-16
PASS-Key® III+ Electronic Immobilizer Operation 3-16

Starting and Operating Your Vehicle 3-17
New Vehicle Break-In 3-17
Ignition Positions 3-18
Retained Accessory Power (RAP) 3-19
Starting the Engine 3-19
Automatic Transmission Operation 3-21
Manual Transmission Operation 3-23
Parking Brake 3-25
Shifting Into Park (Automatic Transmission) 3-26
Shifting Out of Park 3-27
Parking the Vehicle (Manual Transmission) 3-27
Parking Over Things That Burn 3-28
Engine Exhaust 3-28
Running the Vehicle While Parked 3-29

Mirrors 3-30
Manual Rearview Mirror 3-30
Outside Manual Mirrors 3-30
Outside Power Mirrors 3-30

Storage Areas 3-31
Glove Box 3-31
Cupholders 3-31
Center Console Storage 3-31

Roof Panel 3-32
Removing the Roof Panel 3-32
Installing the Roof Panel 3-34

Convertible Top 3-35

Downloaded from www.Manualslib.com manuals search engine

Keys

⚠ WARNING:

Leaving children in a vehicle with the ignition key is dangerous for many reasons, children or others could be badly injured or even killed. They could operate the power windows or other controls or even make the vehicle move. The windows will function with the keys in the ignition and children could be seriously injured or killed if caught in the path of a closing window. Do not leave the keys in a vehicle with children.

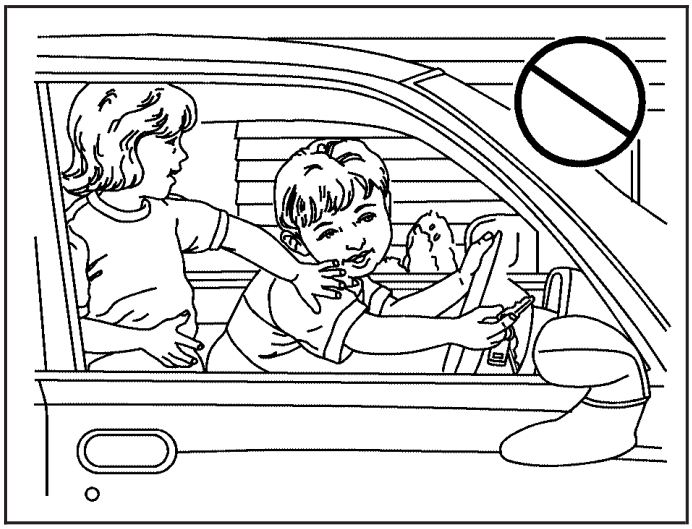

The key can be used for the ignition and all locks.

Your vehicle has a vehicle theft-deterrent system. The key has a transponder in the key head that is electronically coded to match a decoder in your vehicle that allows the key to start the vehicle. If a replacement key or any additional key is needed, you must purchase it from your dealer/retailer. See *PASS-Key® III+ Electronic Immobilizer Operation on page 3-16* for additional information.

Downloaded from www.Manualslib.com manuals search engine

The key has a bar-coded key tag that a dealer/retailer or qualified locksmith can use to make new keys. Store this information in a safe place, not in your vehicle.

Notice: **If you ever lock your keys in the vehicle, you may have to damage the vehicle to get in. Be sure you have spare keys.**

If you are locked out of your vehicle, contact Roadside Assistance. See *Roadside Assistance Program on page 8-7*.

Remote Keyless Entry (RKE) System

See *Radio Frequency Statement on page 8-20* for information regarding Part 15 of the Federal Communications Commission (FCC) Rules and RSS-210/211 of Industry and Science Canada.

Changes or modifications to this system by other than an authorized service facility could void authorization to use this equipment.

If there is a decrease in the RKE operating range, try this:

- Check the distance. The transmitter may be too far from the vehicle. Stand closer during rainy or snowy weather.
- Check the location. Other vehicles or objects may be blocking the signal. Take a few steps to the left or right, hold the transmitter higher, and try again.
- Check the transmitter's battery. See "Battery Replacement" later in this section.
- If the transmitter is still not working correctly, see your dealer/retailer or a qualified technician for service.

Downloaded from www.Manualslib.com manuals search engine

Remote Keyless Entry (RKE) System Operation

The Remote Keyless Entry (RKE) transmitter functions work up to 60 m (195 feet) away from the vehicle.

There are other conditions which can affect the performance of the transmitter. See *Remote Keyless Entry (RKE) System on page 3-3*.

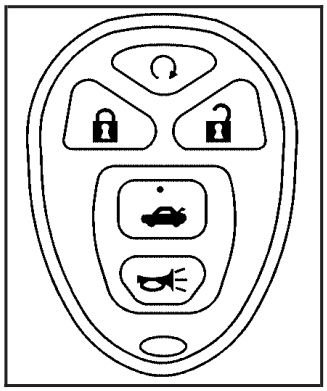

With Remote Start Shown, Without Similar

(Lock): Press to lock all the doors. If enabled through the Driver Information Center (DIC), the parking lamps may flash once and the horn may chirp to indicate locking has occurred. See “LOCK HORN” under *DIC Vehicle Personalization on page 4-40*.

(Unlock): Press once to unlock the driver door. Press again within five seconds to unlock the other doors. The interior lamps come on and stay on for 20 seconds or until the ignition is turned on. If enabled through the DIC, the parking lamps flash once to indicate unlocking has occurred. See “UNLOCK HORN” under *DIC Vehicle Personalization on page 4-40*.

(Trunk Release): Press and hold for approximately one second to open the trunk. The trunk release only works if the ignition is off or the vehicle speed is less than 3 km/h (2 mph).

(Remote Vehicle Start): For vehicles with this feature, press and then press and hold within five seconds to start the engine from outside the vehicle using the RKE transmitter. See *Remote Vehicle Start on page 3-6* for additional information.

(Vehicle Locator/Panic Alarm): Press and release to locate the vehicle. The horn sounds three times and the parking lamps flash three times.

Press and hold for three seconds to sound the panic alarm. The horn sounds and the parking lamps flash for 30 seconds. The ignition must be off for the vehicle locator/remote alarm to work. Press again or turn the ignition to ACC/ACCESSORY or ON/RUN to turn off the alarm.

Downloaded from www.Manualslib.com manuals search engine

The vehicle may have Remote Lock/Unlock Confirmation. This feature provides feedback that a command has been received by the vehicle. The parking lamps flash and the horn may sound briefly. See “LOCK HORN” and “UNLOCK HORN” under *DIC Vehicle Personalization on page 4-40* for programming information.

Programming Transmitters to the Vehicle

Only RKE transmitters programmed to the vehicle will work. If a transmitter is lost or stolen, a replacement can be purchased and programmed through your dealer/retailer. When the replacement transmitter is programmed to the vehicle, all remaining transmitters must also be programmed. Any lost or stolen transmitters no longer work once the new transmitter is programmed. Each vehicle can have up to four transmitters programmed to it.

Battery Replacement

Notice: **When replacing the battery, do not touch any of the circuitry on the transmitter. Static from your body could damage the transmitter.**

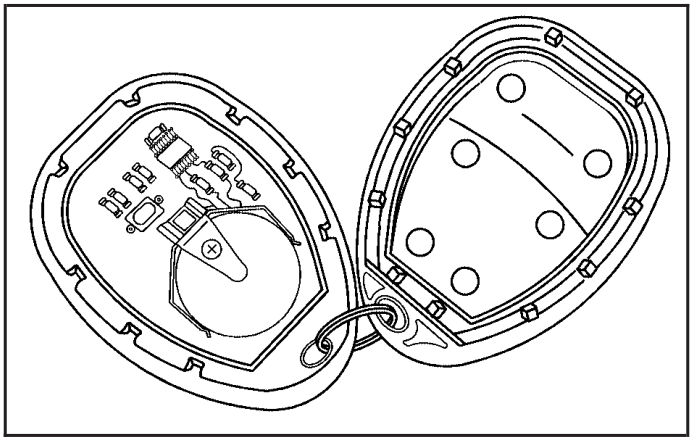

To replace the battery:

1. Separate the transmitter with a flat, thin object inserted into the notch on the side.
2. Remove the old battery. Do not use a metal object.
3. Insert the new battery, positive side facing up. Replace with a CR2032 or equivalent battery.
4. Snap the transmitter back together.

Downloaded from www.Manualslib.com manuals search engine

Remote Vehicle Start

Your vehicle may have a remote start feature. This feature allows you to start the engine from outside the vehicle. It may also start the vehicle's heating or air conditioning systems. See *Climate Control System on page 4-13* for additional information.

Laws in some local communities may restrict the use of remote starters. For example, some laws may require a person using remote start to have the vehicle in view when doing so. Check local regulations for any requirements on remote starting of vehicles.

Do not use the remote start feature if your vehicle is low on fuel. Your vehicle may run out of fuel.

If your vehicle has the remote start feature, the RKE transmitter functions will have an increased range of operation. However, the range may be less while the vehicle is running.

There are other conditions which can affect the performance of the transmitter, see *Remote Keyless Entry (RKE) System on page 3-3* for additional information.

(Remote Vehicle Start): This button will be on the RKE transmitter if you have remote start.

To start the engine using the remote start feature:

1. Aim the RKE transmitter at the vehicle.
2. Press and release the transmitter's lock button, then immediately press and hold the remote vehicle start button for four seconds or until the vehicle's turn signal lamps flash.

   When the vehicle's engine starts, the parking lamps will turn on and remain on while the engine is running. The vehicle's doors will be locked.
3. If it is the first remote start since the vehicle has been driven, repeat these steps, while the engine is still running, to extend the engine running time by 10 minutes. Remote start can be extended one time.

After entering the vehicle during a remote start, insert and turn the key to ON/RUN to drive the vehicle.

After a remote start, the engine will automatically shut off after 10 minutes unless a time extension has been done or the vehicle's key is inserted into the ignition switch and turned to ON/RUN.

The maximum number of remote starts between ignition cycles with the key is two.

Downloaded from www.Manualslib.com manuals search engine

If the remote start procedure is used again before the first 10 minute time frame has ended, the first 10 minutes will immediately expire and the second 10 minute time frame will start.

After your vehicle's engine has been started two times using the remote start button, the vehicle's ignition switch must be turned to ON/RUN and then back to LOCK/OFF using the key before the remote start procedure can be used again.

To manually shut off the engine after a remote start:

- Aim the RKE transmitter at the vehicle and press the remote start button until the parking lamps turn off.
- Turn on the hazard warning flashers. See *Hazard Warning Flashers on page 4-3*.
- Insert the vehicle's key into the ignition switch and turn the switch to ON/RUN and then back to LOCK/OFF.

The remote vehicle start feature will not operate if:

- The remote start system is disabled through the DIC.
- The vehicle's key is in the ignition.
- The vehicle's hood is open
- The hazard warning flashers are on.
- There is an emission control system malfunction. See *Malfunction Indicator Lamp on page 4-27*.
- The engine coolant temperature is too high.
- The oil pressure is low.
- Two remote vehicle starts have already been provided.

Downloaded from www.Manualslib.com manuals search engine

Doors and Locks

Manual Door Locks

⚠ WARNING:

Unlocked doors can be dangerous.

- Passengers, especially children, can easily open the doors and fall out of a moving vehicle. When a door is locked, the handle will not open it. The chance of being thrown out of the vehicle in a crash is increased if the doors are not locked. So, all passengers should wear safety belts properly and the doors should be locked whenever the vehicle is driven.

WARNING: (Continued)

WARNING: (Continued)

- Young children who get into unlocked vehicles may be unable to get out. A child can be overcome by extreme heat and can suffer permanent injuries or even death from heat stroke. Always lock the vehicle whenever leaving it.
- Outsiders can easily enter through an unlocked door when you slow down or stop your vehicle. Locking your doors can help prevent this from happening.

To lock and unlock the vehicle manually:

- From inside the vehicle, pull up or down on the manual door lock knob located on the windowsill.
- From outside the vehicle, turn the key toward the front or rear of the vehicle to unlock or lock the door.

Downloaded from www.Manualslib.com manuals search engine

Power Door Locks

You can use the Remote Keyless Entry (RKE) transmitter to lock and unlock the doors from inside or outside the vehicle. See *Remote Keyless Entry (RKE) System Operation on page 3-4* for more information.

In vehicles with power door lock switches, the switches are located on the doors.

: Press the top of the switch to lock all doors. Press the bottom of the switch to unlock all doors.

Delayed Locking

A vehicle with power door locks has the delayed locking feature which delays the actual locking of the doors when the Remote Keyless Entry (RKE) transmitter is used to lock the vehicle.

If any door is open when locking the vehicle using the RKE transmitter, three chimes will sound signaling that the delayed locking feature is active. Five seconds after the last door is closed, both doors will lock and the parking lamps will flash. To cancel the delay and lock the doors immediately, press the lock button on the RKE a second time.

If the key is in the ignition, this feature will not lock the doors.

Automatic Door Lock

On a vehicle with power door locks, the doors will automatically lock when the shift lever is moved out of (P) Park for a vehicle with an automatic transmission. For a vehicle with a manual transmission, the speed must be greater than 5 mph (8 km/h).

The automatic door locking feature cannot be disabled.

Automatic Door Unlock

On vehicles with an automatic transmission and power door locks, the doors with automatically unlock when the shift lever is moved into (P) Park.

On vehicles with a manual transmission and power door locks, the doors will automatically unlock when the key is removed from the ignition.

The automatic unlock feature can be disabled or programmed in different ways if the vehicle has an automatic transmission and a Driver Information Center (DIC). See *DIC Vehicle Personalization on page 4-40* for more information.

Downloaded from www.Manualslib.com manuals search engine

Trunk

To release the trunk lid use either the Remote Keyless Entry (RKE) transmitter, or see “Remote Trunk Release” following.

To close the trunk, push down firmly from the rear center of the trunk lid.

⚠ WARNING:

Exhaust gases can enter the vehicle if it is driven with the liftgate, trunk/hatch open, or with any objects that pass through the seal between the body and the trunk/hatch or liftgate. Engine exhaust contains Carbon Monoxide (CO) which cannot be seen or smelled. It can cause unconsciousness and even death.

WARNING: (Continued)

WARNING: (Continued)

If the vehicle must be driven with the liftgate, or trunk/hatch open:

- Close all of the windows.
- Fully open the air outlets on or under the instrument panel.
- Adjust the Climate Control system to a setting that brings in only outside air and set the fan speed to the highest setting. See Climate Control System in the Index.
- If the vehicle is equipped with a power liftgate, disable the power liftgate function.

For more information about carbon monoxide, see *Engine Exhaust on page 3-28*.

Downloaded from www.Manualslib.com manuals search engine

Remote Trunk Release

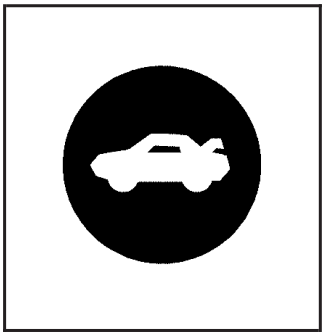

To open the trunk from inside the vehicle, press the remote trunk release button located in the glovebox.

The remote trunk release will only work when either the ignition is off or in ACC/ACCESSORY, the parking brake is engaged, or the vehicle speed is less than 2 mph (3 km/h).

Emergency Trunk Release Handle

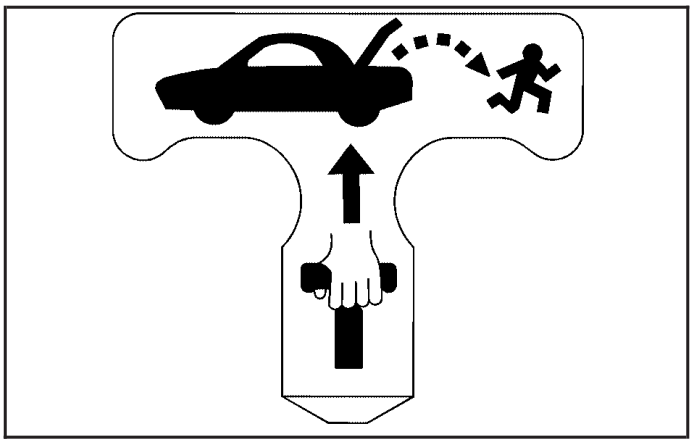

Notice: **Do not use the emergency trunk release handle as a tie-down or anchor point when securing items in the trunk as it could damage the handle. The emergency trunk release handle is only intended to aid a person trapped in a latched trunk, enabling them to open the trunk from the inside.**

There is a glow-in-the-dark emergency trunk release handle located inside the trunk on the driver's side. This handle will glow following exposure to light. If someone is locked in the trunk, they can pull the release handle and push the trunk lid open from the inside to open the trunk.

Downloaded from www.Manualslib.com manuals search engine

Windows

⚠ WARNING:

Leaving children, helpless adults, or pets in a vehicle with the windows closed is dangerous. They can be overcome by the extreme heat and suffer permanent injuries or even death from heat stroke. Never leave a child, a helpless adult, or a pet alone in a vehicle, especially with the windows closed in warm or hot weather.

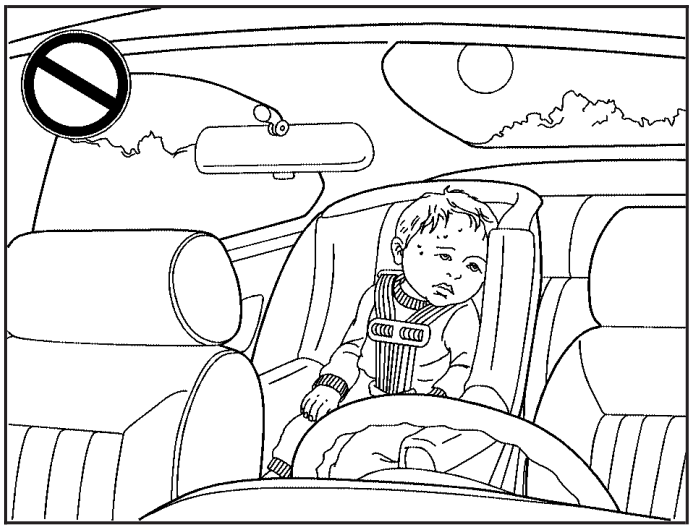

Downloaded from www.Manualslib.com manuals search engine

Manual Windows

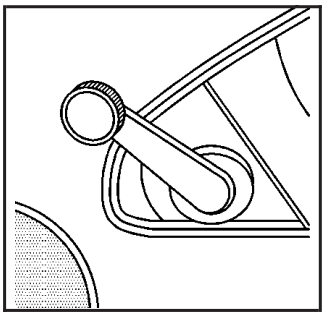

On vehicles with manual windows, use the window crank to open and close each window.

Power Windows

⚠ WARNING:

Leaving children in a vehicle with the keys is dangerous for many reasons, children or others could be badly injured or even killed. They could operate the power windows or other controls or even make the vehicle move. The windows will function and they could be seriously injured or killed if caught in the path of a closing window. Do not leave keys in a vehicle with children.

WARNING: (Continued)

WARNING: (Continued)

When there are children in the rear seat use the window lockout button to prevent unintentional operation of the windows.

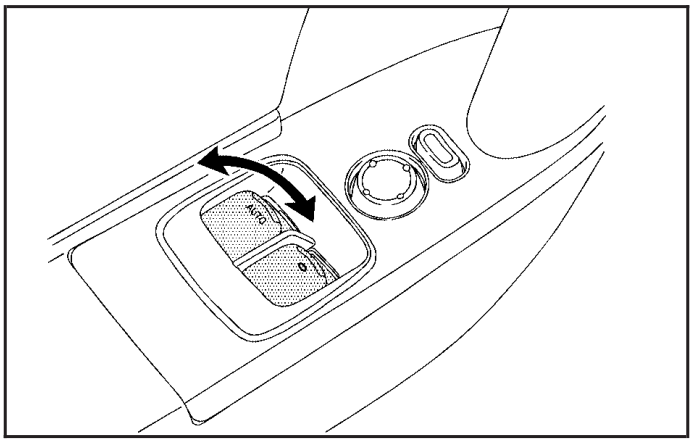

On vehicles with power windows, the switches on the driver's door armrest control both windows.

The passenger's door has a window switch that controls that window. Press the front of the switch to open the window. Pull the switch up to close it.

Downloaded from www.Manualslib.com manuals search engine

Express-Down Window

Windows with an express-down feature allow the window to be lowered fully without pressing and holding the switch. Press the front of the switch to the first position, and the window opens a small amount. Press the switch down fully and the window goes all the way down.

To stop the window while it is lowering, pull up the front of the switch.

Sun Visors

To use the sun visor(s), pull the edge of the visor nearest to the windshield toward you.

Visor Vanity Mirror

Your vehicle may have a driver's side vanity mirror. Swing down the sun visor and slide the cover to expose the mirror.

Theft-Deterrent Systems

Vehicle theft is big business, especially in some cities. This vehicle has theft-deterrent features, however, they do not make it impossible to steal.

Content Theft-Deterrent

Your vehicle may have a content theft-deterrent alarm system.

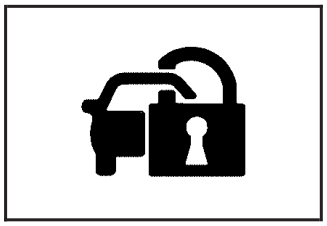

The security light, located on the instrument panel cluster, will turn on to indicate that arming has been initiated.

Once the system is armed, the security light will flash once every three seconds.

If the security light is flashing twice per second, this means that a door is open.

Downloaded from www.Manualslib.com manuals search engine

Arming the System

While the ignition is off, press the Remote Keyless Entry (RKE) transmitter lock button, to arm the system.

The system will arm after either of these things occur:

- Thirty seconds after all the doors are closed.
- Sixty seconds with any door open.

If you press the lock button on the transmitter a second time while all the doors are closed, the system will arm immediately. The system arms in 60 seconds if a door is open, or after the open door is closed.

If you do not want to arm the system, lock the car with the manual door lock knobs.

Disarming the System

To disarm the system:

- Press the unlock button on the RKE transmitter.
- Turn the ignition on.

If the system is armed and the trunk is opened using the trunk release button on the transmitter, the system will temporarily disarm itself and re-arm when the trunk has been closed. This allows you to exit the vehicle, lock the doors using the transmitter, or open the trunk using the transmitter without having to disarm and re-arm the system.

Once the system is disarmed, the security light will stop flashing.

How the System Alarm is Activated

To activate the system if it is armed:

- Open the driver's door or trunk. This causes a ten second pre-alarm chirping noise followed by the horn sounding and lights flashing for 30 seconds.
- Open a passenger's door. This immediately causes a full alarm of the horn sounding and lights flashing for 30 seconds.

After the 30 second alarm ends, the system will re-arm itself.

How to Turn Off the System Alarm

To turn off the system alarm, do one of the following:

- Press the lock button on the RKE transmitter. The system will then re-arm itself.
- Press the unlock button on the RKE transmitter. This will also disarm the system.
- Insert the key in the ignition and turn it on. This will also disarm the system.

How to Detect a Tamper Condition

If you hear three chirps when you press the unlock, lock, or trunk release buttons on the RKE transmitter, it means that the content theft security system alarm was activated previously.

Downloaded from www.Manualslib.com manuals search engine

PASS-Key® III+ Electronic Immobilizer

See *Radio Frequency Statement on page 8-20* for information regarding Part 15 of the Federal Communications Commission (FCC) Rules and RSS-210/211 of Industry and Science Canada.

PASS-Key® III+ Electronic Immobilizer Operation

Your vehicle has PASS-Key® III+ (Personalized Automotive Security System) theft-deterrent system. PASS-Key® III+ is a passive theft-deterrent system.

The system is automatically armed when the key is removed from the ignition.

You do not have to manually arm or disarm the system.

The security light will come on if there is a problem with arming or disarming the theft-deterrent system.

When the PASS-Key® III+ system senses that someone is using the wrong key, it prevents the vehicle from starting. Anyone using a trial-and-error method to start the vehicle will be discouraged because of the high number of electrical key codes.

When trying to start the vehicle if the engine does not start and the security light comes on, there may be a problem with your theft-deterrent system. Turn the ignition off and try again.

If the engine still does not start, and the key appears to be undamaged, try another ignition key. At this time, you may also want to check the fuse, see *Fuses and Circuit Breakers on page 6-99*. If the engine still does not start with the other key, your vehicle needs service. If your vehicle does start, the first key may be faulty. See your dealer/retailer who can service the PASS-Key® III+ to have a new key made. In an emergency, contact Roadside Assistance. See *Roadside Assistance Program on page 8-7*, for more information.

It may be possible for the PASS-Key® III+ decoder to “learn” the transponder value of a new or replacement key. Up to 10 keys may be programmed for the vehicle. The following procedure is for programming additional keys only. If all the currently programmed keys are lost or do not operate, you must see your dealer/retailer or a locksmith who can service PASS-Key® III+ to have keys made and programmed to the system.

See your dealer/retailer or a locksmith who can service PASS-Key® III+ to get a new key blank that is cut exactly as the ignition key that operates the system.

Downloaded from www.Manualslib.com manuals search engine

To program the new key:

1. Verify that the new key has a ⊕ stamped on it.
2. Insert the already programmed key in the ignition and start the engine. If the engine will not start, see your dealer/retailer for service.
3. After the engine has started, turn the key to LOCK/OFF, and remove the key.
4. Insert the key to be programmed and turn it to the ON/RUN position within five seconds of the original key being turned to the LOCK/OFF position.

   The security light will turn off once the key has been programmed.
5. Repeat Steps 1 through 4 if additional keys are to be programmed.

If you are ever driving and the security light comes on and stays on, you may be able to restart your engine if you turn it off. Your PASS-Key® III+ system, however, is not working properly and must be serviced by your dealer/retailer. Your vehicle is not protected by the PASS-Key® III+ system at this time.

If you lose or damage your PASS-Key® III+ key, see your dealer/retailer or a locksmith who can service PASS-Key® III+ to have a new key made.

Do not leave the key or device that disarms or deactivates the theft deterrent system in the vehicle.

Starting and Operating Your Vehicle

New Vehicle Break-In

Notice: **The vehicle does not need an elaborate break-in. But it will perform better in the long run if you follow these guidelines for the first 500 miles (805 km):**

- **Do not drive at any one constant speed, fast or slow.**
- **Do not exceed 70 mph (113 km/h).**
- **Do not make full-throttle starts; also refrain from using the full throttle while driving. Avoid downshifting to brake or slow the vehicle.**

If these break-in procedures are not followed, the vehicle's engine, axle, or other parts could be damaged.

Avoid making hard stops for the first 200 miles (322 km) or so. During this time the new brake linings are not yet broken in. Hard stops with new linings can mean premature wear and earlier replacement. Follow this breaking-in guideline every time you get new brake linings.

Following break-in, engine speed and load can be gradually increased.

Downloaded from www.Manualslib.com manuals search engine

Ignition Positions

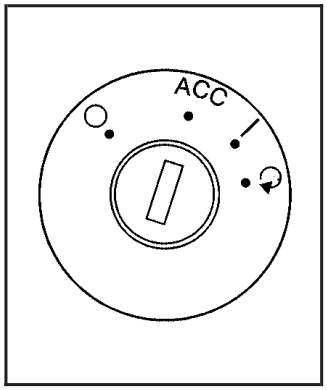

The ignition switch has four different positions.

To shift out of P (Park), the ignition must be in ON/RUN or ACC/ACCESSORY and the brake pedal must be applied.

Notice: **Using a tool to force the key to turn in the ignition could cause damage to the switch or break the key. Use the correct key, make sure it is all the way in, and turn it only with your hand. If the key cannot be turned by hand, see your dealer/retailer.**

◯ **(LOCK/OFF):** This position locks the ignition and steering column. The key can only be removed in LOCK/OFF.

If you have an automatic transmission, the ignition switch cannot be turned to LOCK/OFF unless the shift lever is in P (Park).

If you have a manual transmission, the ignition switch can be turned to LOCK/OFF in any shift lever position.

⚠ WARNING:

If you have a manual transmission removing the key from the ignition switch will lock the steering column and result in a loss of ability to steer the vehicle. This could cause a collision. If you need to turn the engine off while the vehicle is moving, turn the key to ACC/ACCESSORY.

ACC (ACC/ACCESSORY): This is the position in which you can operate some of the electrical accessories. It unlocks the steering wheel and ignition.

| **(ON/RUN):** This position can be used to operate the electrical accessories and to display some instrument panel cluster warning and indicator lights. The switch stays in this position when the engine is running.

Downloaded from www.Manualslib.com manuals search engine

If you leave the key in the ACC/ACCESSORY or ON/RUN position with the engine off, the battery could be drained. You may not be able to start the vehicle if the battery is allowed to drain for an extended period of time.

(START): This is the position that starts the engine. When the engine starts, release the key. The ignition switch returns to ON/RUN for normal driving.

A warning tone will sound when the driver door is opened, the ignition is in LOCK/OFF or ACC/ACCESSORY and the key is in the ignition.

Retained Accessory Power (RAP)

These vehicle accessories may be used for up to 10 minutes after the engine is turned off.

- Audio System
- Power Windows, if equipped

The power windows will continue to work for up to 10 minutes or until any door is opened. The radio will work when the key is in ON/RUN or ACC/ACCESSORY. Once the key is turned from ON/RUN to OFF/LOCK, the radio will continue to work for 10 minutes or until the driver's door is opened.

Starting the Engine

Place the transmission in the proper gear.

Automatic Transmission

Move the shift lever to P (Park) or N (Neutral). The engine will not start in any other position. To restart the vehicle when it is already moving, use N (Neutral) only.

Notice: **Do not try to shift to P (Park) if the vehicle is moving. If you do, you could damage the transmission. Shift to P (Park) only when the vehicle is stopped.**

Manual Transmission

The shift lever should be in N (Neutral) and the parking brake engaged. Hold the clutch pedal down to the floor and start the engine. The vehicle will not start if the clutch pedal is not all the way down.

Downloaded from www.Manualslib.com manuals search engine

Starting Procedure

1. With your foot off the accelerator pedal, turn the ignition key to START. When the engine starts, let go of the key. The idle speed will go down as the engine warms. Do not race the engine immediately after starting it. Operate the engine and transmission gently to allow the oil to warm up and lubricate all moving parts.

   The vehicle has a Computer-Controlled Cranking System. This feature assists in starting the engine and protects components. If the ignition key is turned to the START position, and then released when the engine begins cranking, the engine will continue cranking for a few seconds or until the vehicle starts. If the engine does not start and the key is held in START for many seconds, cranking will be stopped after 15 seconds to prevent cranking motor damage. To prevent gear damage, this system also prevents cranking if the engine is already running. Engine cranking can be stopped by turning the ignition switch to ACC/ACCESSORY or LOCK/OFF.

Notice: **Cranking the engine for long periods of time, by returning the key to the START position immediately after cranking has ended, can overheat and damage the cranking motor, and drain the battery. Wait at least 15 seconds between each try, to let the cranking motor cool down.**

2. If the engine does not start after 5-10 seconds, especially in very cold weather (below 0°F or –18°C), it could be flooded with too much gasoline. Push the accelerator pedal all the way to the floor and holding it there as you hold the key in START for a maximum of 15 seconds. Wait at least 15 seconds between each try, to allow the cranking motor to cool. When the engine starts, let go of the key and accelerator. If the vehicle starts briefly but then stops again, repeat the procedure. This clears the extra gasoline from the engine. Do not race the engine immediately after starting it. Operate the engine and transmission gently until the oil warms up and lubricates all moving parts.

Notice: **The engine is designed to work with the electronics in the vehicle. If you add electrical parts or accessories, you could change the way the engine operates. Before adding electrical equipment, check with your dealer/retailer. If you do not, the engine might not perform properly. Any resulting damage would not be covered by the vehicle warranty.**

Downloaded from www.Manualslib.com manuals search engine

Automatic Transmission Operation

If the vehicle has an automatic transmission, the shift lever is located on the center console between the front seats.

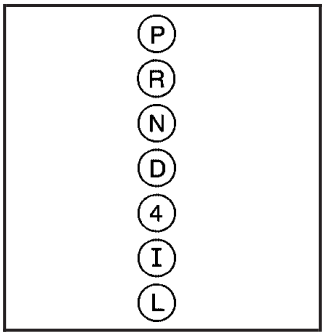

There are several different positions for the automatic transmission.

P (Park): This position locks the rear wheels. It is the best position to use when starting the engine because the vehicle cannot move easily.

⚠ WARNING:

It can be dangerous to get out of the vehicle if the shift lever is not fully in P (Park) with the parking brake firmly set. The vehicle can roll. If you have left the engine running, the vehicle can move suddenly. You or others could be injured. To be sure the vehicle will not move, even when you are on fairly level ground, use the steps that follow.

Make sure the shift lever is fully in P (Park) before starting the engine. The vehicle has an automatic transmission shift lock control system. You have to fully apply the regular brakes first and then press the shift lever button before the vehicle can shift from P (Park) when the ignition key is in ON/RUN. If the vehicle cannot shift out of P (Park), ease pressure on the shift lever and push the shift lever all the way into P (Park) as you maintain brake application. Then press the shift lever button and then move the shift lever into another gear. See *Shifting Out of Park on page 3-27*.

Downloaded from www.Manualslib.com manuals search engine

Notice: **Shifting to R (Reverse) while the vehicle is moving forward could damage the transmission. The repairs would not be covered by the vehicle warranty. Shift to R (Reverse) only after the vehicle is stopped.**

R (Reverse): Use this gear to back up.

To rock the vehicle back and forth to get out of snow, ice, or sand without damaging the transmission, see *If Your Vehicle is Stuck in Sand, Mud, Ice, or Snow on page 5-21*.

N (Neutral): In this position, the engine does not connect with the wheels. To restart the engine when the vehicle is already moving, use N (Neutral) only. Also, use N (Neutral) when the vehicle is being towed.

⚠ WARNING:

Shifting into a drive gear while the engine is running at high speed is dangerous. Unless your foot is firmly on the brake pedal, the vehicle could move very rapidly. You could lose control and hit people or objects. Do not shift into a drive gear while the engine is running at high speed.

Notice: **Shifting out of P (Park) or N (Neutral) with the engine running at high speed may damage the transmission. The repairs would not be covered by the vehicle warranty. Be sure the engine is not running at high speed when shifting the vehicle.**

D (Drive): This position is for normal driving with the automatic transmission. It provides the best fuel economy. If you need more power for passing and you are:

- Going less than about 35 mph (55 km/h), push the accelerator pedal about halfway down.
- Going about 35 mph (55 km/h), push the accelerator all the way down.

The transmission will shift down to a lower gear and have more power.

Downshifting the transmission in slippery road conditions could result in skidding, see “Skidding” under *Loss of Control on page 5-13*.

4 (Fourth): This position is also used for normal driving. However, it reduces vehicle speed more than D (Drive) without using the brakes. You might choose 4 (Fourth) instead of D (Drive) when driving on hilly, winding roads and when going down a steep hill.

Downloaded from www.Manualslib.com manuals search engine

I (Intermediate): This position is also used for normal driving. However, it reduces vehicle speed without using the brakes, for slight downgrades where the vehicle would otherwise accelerate due to steepness of grade. If constant upshifting or downshifting occurs while driving on steep hills, this position can be used to prevent repetitive types of shifts. You might choose I (Intermediate) instead of D (Drive) when driving on hilly and winding roads.

L (Low): This position reduces vehicle speed more than I (Intermediate) without using the brakes. You can use it on very steep hills, or in deep snow or mud. If the shift lever is put in L (Low), the transmission will not shift into a low gear until the vehicle is going slowly enough.

Notice: **Spinning the tires or holding the vehicle in one place on a hill using only the accelerator pedal may damage the transmission. The repair will not be covered by the vehicle warranty. If you are stuck, do not spin the tires. When stopping on a hill, use the brakes to hold the vehicle in place.**

Manual Transmission Operation

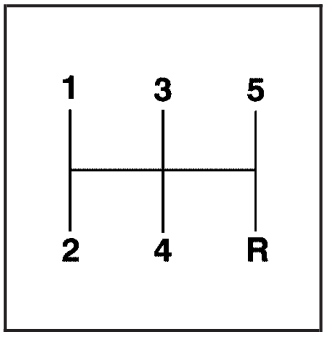

This is the shift pattern.

Here is how to operate the manual transmission:

1 (First): Press the clutch pedal and shift into 1 (First). Then, slowly let up on the clutch pedal as you press the accelerator pedal.

Downloaded from www.Manualslib.com manuals search engine

You can shift into 1 (First) when the vehicle is traveling less than 20 mph (32 km/h). If you have come to a complete stop and it is hard to shift into 1 (First), put the shift lever in N (Neutral) and let up on the clutch pedal. Press the clutch pedal back down. Then shift into 1 (First).

2 (Second): Press the clutch pedal as you let up on the accelerator pedal and shift into 2 (Second). Then, slowly let up on the clutch pedal as you press the accelerator pedal.

3 (Third), 4 (Fourth), and 5 (Fifth): Shift into 3 (Third), 4 (Fourth) and 5 (Fifth) the same way you do for 2 (Second). Slowly let up on the clutch pedal as you press the accelerator pedal down.

To stop, let up on the accelerator pedal and press the brake pedal. Just before the vehicle stops, press the clutch pedal and the brake pedal, and shift to N (Neutral).

N (Neutral): Use this position when you start or idle the engine.

R (Reverse): To back up, press the clutch pedal. After the vehicle stops, shift into R (Reverse). Slowly let up on the clutch pedal as you press the accelerator pedal. If it is hard to shift, let the shift lever return to N (Neutral) and release the clutch pedal. Then press the clutch pedal again and shift into R (Reverse). Do not attempt to shift into the fifth gear position prior to shifting into R (Reverse). The transmission has a lock out feature which prevents a fifth gear to reverse gear shift.

Notice: **Shifting to R (Reverse) while the vehicle is moving forward could damage the transmission. The repairs would not be covered by the vehicle warranty. Shift to R (Reverse) only after the vehicle is stopped.**

Also, use 1 (First) or R (Reverse) along with the parking brake, for parking the vehicle.

Downloaded from www.Manualslib.com manuals search engine

Parking Brake

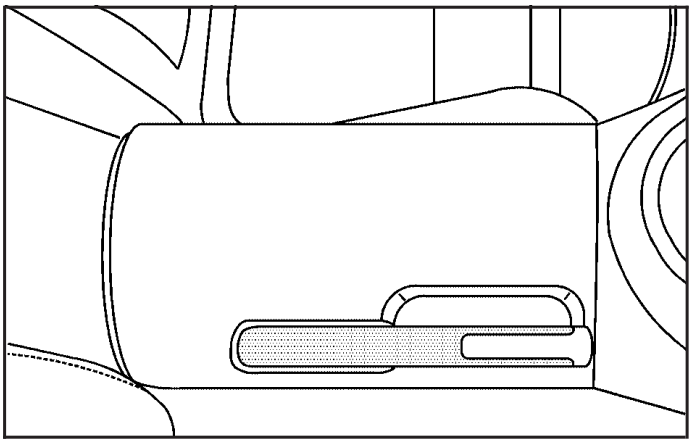

The parking brake lever is located between the front seats.

To set the parking brake, hold the brake pedal down and pull up on the parking brake lever. If the ignition is on, the brake system warning light will come on. See *Brake System Warning Light on page 4-23*.

To release the parking brake, hold the brake pedal down. Pull the parking brake lever up until you can press the release button. Hold the release button in as you move the brake lever all the way down.

If you forget to release your parking brake, a chime will sound and a warning message will be displayed in the Driver Information Center (DIC) when the vehicle is moving faster than 5 mph (8 kph). See *DIC Warnings and Messages on page 4-36*.

Notice: **Driving with the parking brake on can overheat the brake system and cause premature wear or damage to brake system parts. Make sure that the parking brake is fully released and the brake warning light is off before driving.**

Downloaded from www.Manualslib.com manuals search engine

Shifting Into Park (Automatic Transmission)

⚠ WARNING:

It can be dangerous to get out of the vehicle if the shift lever is not fully in P (Park) with the parking brake firmly set. The vehicle can roll. If you have left the engine running, the vehicle can move suddenly. You or others could be injured. To be sure the vehicle will not move, even when you are on fairly level ground, use the steps that follow.

1. Hold the brake pedal down and set the parking brake. See *Parking Brake on page 3-25* for more information.
2. Move the shift lever into P (Park) by pressing the button on the shift lever and pushing the lever all the way toward the front of the vehicle.
3. Turn the ignition key to LOCK/OFF.
4. Remove the key and take it with you. If you can leave the vehicle with the ignition key in your hand, the vehicle is in P (Park).

Leaving the Vehicle With the Engine Running (Automatic Transmission)

⚠ WARNING:

It can be dangerous to leave the vehicle with the engine running. The vehicle could move suddenly if the shift lever is not fully in P (Park) with the parking brake firmly set. And, if you leave the vehicle with the engine running, it could overheat and even catch fire. You or others could be injured. Do not leave the vehicle with the engine running.

If you have to leave the vehicle with the engine running, be sure the vehicle is in P (Park) and the parking brake is firmly set before you leave it. After you have moved the shift lever into P (Park), hold the brake pedal down. Then see if you can move the shift lever away from P (Park) without first pushing the shift lock release button. If you can, it means that the shift lever was not fully locked into P (Park).

Downloaded from www.Manualslib.com manuals search engine

Torque Lock (Automatic Transmission)

If you are parking on a hill and you do not shift your transmission into P (Park) properly, the weight of the vehicle may put too much force on the parking pawl in the transmission. You may find it difficult to pull the shift lever out of P (Park). This is called “torque lock.” To prevent torque lock, set the parking brake and then shift into P (Park) properly before you leave the driver seat. To find out how, see *Shifting Into Park (Automatic Transmission) on page 3-26*.

When you are ready to drive, move the shift lever out of P (Park) before you release the parking brake.

If torque lock does occur, you may need to have another vehicle push yours a little uphill to take some of the pressure from the parking pawl in the transmission, so you can pull the shift lever out of P (Park).

Shifting Out of Park

The vehicle is equipped with an electronic shift lock release system. The shift lock release is designed to:

- Prevent ignition key removal unless the shift lever is in P (Park) with the shift lever button fully released, and
- Prevent movement of the shift lever out of P (Park), unless the ignition is in ON/RUN or ACC/ACCESSORY and the regular brake pedal is applied.

The shift lock release is always functional except in the case of an uncharged or low voltage (less than 9 volt) battery.

If the vehicle has an uncharged battery or a battery with low voltage, try charging or jump starting the battery. See *Jump Starting on page 6-36* for more information.

To shift out of P (Park):

1. Apply the brake pedal.
2. Press the shift lever button.
3. Move the shift lever to the desired position.

If you still are unable to shift out of P (Park):

1. Fully release the shift lever button.
2. While holding down the brake pedal, press the shift lever button again.
3. Move the shift lever to the desired position.

If you still cannot move the shift lever from P (Park), see your dealer/retailer.

Parking the Vehicle (Manual Transmission)

Before leaving the manual transmission vehicle, fully press the clutch pedal in, move the shift lever in either 1 (First) gear or R (Reverse), and firmly apply the parking brake. See *Manual Transmission Operation on page 3-23*.

Downloaded from www.Manualslib.com manuals search engine

Parking Over Things That Burn

⚠ WARNING:

Things that can burn could touch hot exhaust parts under the vehicle and ignite. Do not park over papers, leaves, dry grass, or other things that can burn.

Engine Exhaust

⚠ WARNING:

Engine exhaust contains Carbon Monoxide (CO) which cannot be seen or smelled. Exposure to CO can cause unconsciousness and even death.

WARNING: (Continued)

WARNING: (Continued)

Exhaust may enter the vehicle if:

- The vehicle idles in areas with poor ventilation (parking garages, tunnels, deep snow that may block underbody airflow or tail pipes).
- The exhaust smells or sounds strange or different.
- The exhaust system leaks due to corrosion or damage.
- The vehicle's exhaust system has been modified, damaged or improperly repaired.
- There are holes or openings in the vehicle body from damage or after-market modifications that are not completely sealed.

If unusual fumes are detected or if it is suspected that exhaust is coming into the vehicle:

- Drive it only with the windows completely down.
- Have the vehicle repaired immediately.

Never park the vehicle with the engine running in an enclosed area such as a garage or a building that has no fresh air ventilation.

Downloaded from www.Manualslib.com manuals search engine

Running the Vehicle While Parked

It is better not to park with the engine running. But if you ever have to, here are some things to know.

⚠ WARNING:

Idling a vehicle in an enclosed area with poor ventilation is dangerous. Engine exhaust may enter the vehicle. Engine exhaust contains Carbon Monoxide (CO) which cannot be seen or smelled. It can cause unconsciousness and even death. Never run the engine in an enclosed area that has no fresh air ventilation. For more information, see *Engine Exhaust on page 3-28*.

⚠ WARNING:

It can be dangerous to get out of the vehicle if the automatic transmission shift lever is not fully in P (Park) with the parking brake firmly set. The vehicle can roll. Do not leave the vehicle when the engine is running unless you have to. If you have left the engine running, the vehicle can move suddenly. You or others could be injured. To be sure the vehicle will not move, even when it is on fairly level ground, always set the parking brake and move the automatic transmission shift lever to P (Park), or the manual transmission shift lever to Neutral.

Follow the proper steps to be sure the vehicle will not move. See *Shifting Into Park (Automatic Transmission) on page 3-26* and *Parking the Vehicle (Manual Transmission) on page 3-27*.

Downloaded from www.Manualslib.com manuals search engine

Mirrors

Manual Rearview Mirror

Adjust the mirror to see clearly behind your vehicle. Hold the mirror in the center to move it up or down and side to side. Adjust the mirror to avoid glare from the headlamps behind your vehicle. Move the lever to the right for nighttime use and to the left for daytime use.

Vehicles with OnStar® have three additional control buttons located at the bottom of the mirror. See your dealer/retailer for more information on the system and how to subscribe to OnStar. See the OnStar® owner's manual for more information on the services OnStar provides.

Outside Manual Mirrors

Adjust the outside rearview mirrors to see a little of the side of your vehicle, and the area beside your vehicle.

Manually fold the mirrors inward to prevent damage when going through an automatic car wash. To fold, push the mirror toward the vehicle. Push the mirror outward, to return to its original position.

Outside Power Mirrors

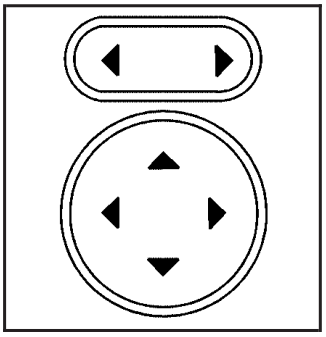

Controls for the outside power mirrors are located on the driver door.

To adjust the mirrors:

1. Press the left or right side of the selector switch located next to the control pad to choose the driver or passenger side mirror.
2. Press one of the four arrows located on the control pad to move the mirror in the desired direction.
3. Adjust each outside mirror so that a little of the vehicle and the area behind it can be seen.

Manually fold the mirrors inward to prevent damage when going through an automatic car wash. To fold, push the mirror toward the vehicle. Push the mirror outward, to return to its original position.

Downloaded from www.Manualslib.com manuals search engine

Storage Areas

Glove Box

Lift the glove box handle up to open it. Use the key to lock and unlock the glove box.

Cupholders

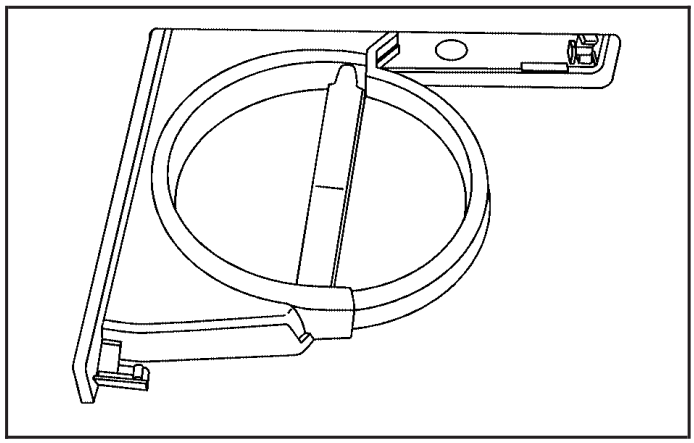

There is a cupholder on the passenger side of the center console. Press and release the forward section of the cupholder to access it.

Center Console Storage

There is an upright center console storage area between the seatbacks. Open the storage area by pressing and releasing the button near the top so it extends out. Turn the button in either direction to unlatch the lid and pull the console lid down.

Press the release button back in after closing the lid.

Downloaded from www.Manualslib.com manuals search engine

Roof Panel

On vehicles with a removable roof panel, follow the procedures when removing or installing it.

Removing the Roof Panel

⚠ WARNING:

Do not try to remove a roof panel while the vehicle is moving. Trying to remove the roof panel while the vehicle is moving could cause an accident. The panel could fall into the vehicle and cause you to lose control, or it could fly off and strike another vehicle. You or others could be injured. Remove the roof panel only when the vehicle is parked.

Until you are sure you can remove the panel alone, have someone help you.

Notice: **If you drop or rest a roof panel on its edges, the roof panel, paint and/or weatherstripping may be damaged.**

Park on a level surface and set the parking brake. Shift an automatic transmission into (P) Park. Shift a manual transmission into (N) Neutral.

1. Make sure the ignition is off.
2. Lower the windows.

   There are two release latches on the front of the roof panel and one rear release latch on the back of the roof panel.

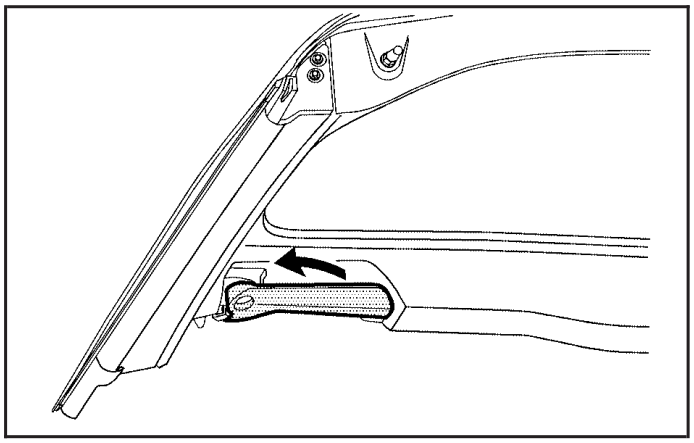

3. To unlock the release latches on the front of the roof panel, grasp each handle and pull it outward.

Downloaded from www.Manualslib.com manuals search engine

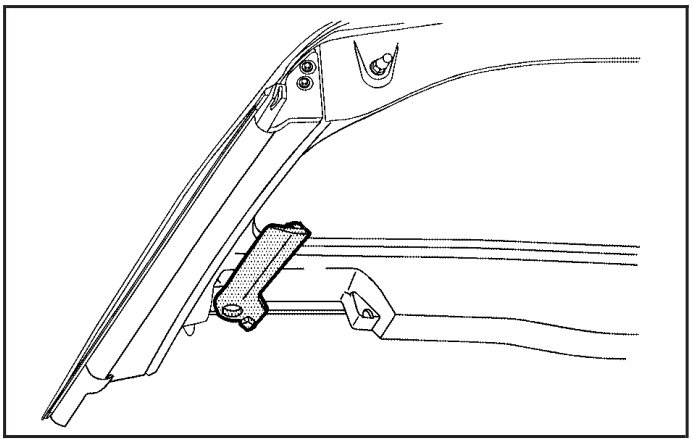

The driver's side handle moves toward the driver's door. The passenger's side handle moves toward the passenger's door.

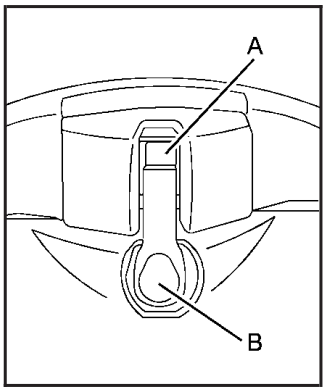

Pull down the latch lever.

4. To unlock the rear of the roof panel's rear release latch, press the back of the release handle (B). Then press the button on the front of the release handle (A) with your thumb.
5. Stand on one side of the vehicle, and if necessary, have someone stand on the other side. Together, carefully lift the front edge of the roof panel up and forward.
6. When the roof panel is loosened from the vehicle, one person should grasp the roof panel as close to the center as possible and lift it away from the vehicle.

Downloaded from www.Manualslib.com manuals search engine

Storing the Roof Panel

After removing the panel place it on a flat surface with a soft protective covering. The panel must be stored with the interior surface resting flat.

Installing the Roof Panel

⚠ WARNING:

An improperly attached roof panel may fall into or fly off the vehicle. You or others could be injured. After installing the roof panel, always check that it is firmly attached by pushing up on the underside of the panel. Check now and then to be sure the roof panel is firmly in place.

Notice: **If you drop or rest a roof panel on its edges, the roof panel, paint and/or weatherstripping may be damaged. Always place the roof panel in the stowage receivers after removing it from the vehicle.**

In most cases, it makes it easier if two people re-install the roof panel.

1. Park on a level surface and set the parking brake. Shift an automatic transmission into (P) Park. Shift a manual transmission into (N) Neutral.
2. Check that the front release latches and the rear release latch on the vehicle's roof opening are in their opened positions before attempting to install the roof panel.
3. Carefully place the roof panel over the top of the vehicle.
4. Position the rear edge of the roof panel on the back of the roof opening. Then align and fit the pins at the rear of the roof panel. Gently lower the front edge of the roof panel to the front of the roof opening.

Downloaded from www.Manualslib.com manuals search engine

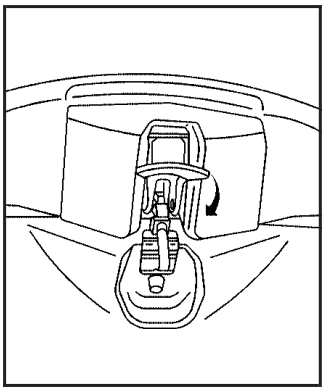

5. Turn the front release handles inward so that they latch to the closed position.

6. Push up on the handle of the rear roof release handle to latch its hook in the closed position.
7. Push and pull the roof panel up and down and side-to-side to ensure the roof panel is securely installed.

Convertible Top

For care and cleaning of the convertible top, see *Convertible Top on page 6-95* under “Service and Appearance Care”. High pressure car washes may cause water to enter the vehicle.

A clear protective film has been installed on the trunk lid surface under the convertible top buttresses. This film is designed to help prevent paint damage to the trunk lid. Do not remove this protective film.

The following procedures explain the proper operation of the manual convertible top.

Downloaded from www.Manualslib.com manuals search engine

The parts of the manual convertible top that are used when lowering and raising it are:

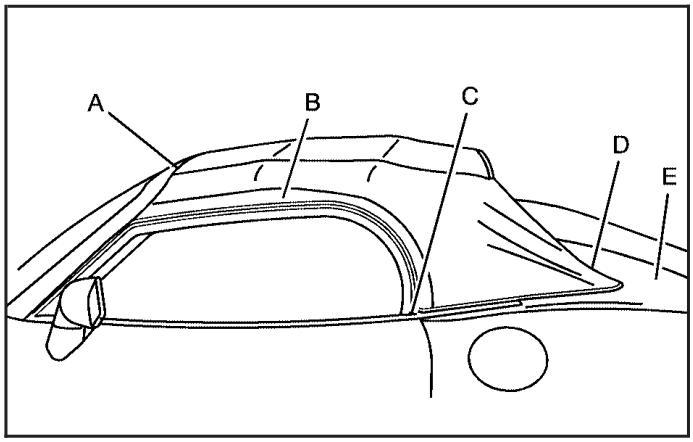

A. Front Edge
B. Side Edge
C. Lower Seal Pins
D. Rear Buttresses
E. Trunk

Notice: **Leaving the convertible top down and exposing the interior of your vehicle to outdoor conditions may cause damage. Always close the convertible top if leaving your vehicle outdoors.**

Notice: **Lowering the convertible top when there are objects in the storage area could damage it or break the glass rear window. Always verify that no objects are in the storage area before lowering the convertible top.**

Notice: **Lowering the top if it is damp, wet, or dirty can cause stains, mildew, and damage to the inside of your vehicle. Dry off the top before lowering it.**

Notice: **If you lower the top on your vehicle in cold weather (0°F/-18°C or lower), you may damage top components. Do not lower the top in cold weather.**

Notice: **If you raise or lower the convertible top while the vehicle is in motion, you could damage the top or the top mechanism. The repairs would not be covered by your warranty. Always put an automatic transmission in (P) Park or a manual transmission in (1) First or (R) Reverse, turn the ignition off and engage the parking brake before raising or lowering the convertible top.**

Downloaded from www.Manualslib.com manuals search engine

⚠ WARNING:

Moving parts of the convertible top can be dangerous. People can be injured by the convertible top and its mechanism. Keep people away from your vehicle when you are lowering or raising the top.

Lowering the Manual Convertible Top

1. Empty the trunk of all contents.
2. Park on a level surface and set the parking brake. Shift an automatic transmission into (P) Park. Shift a manual transmission into (1) First or (R) Reverse.
3. Turn the ignition off.
4. Open the trunk.

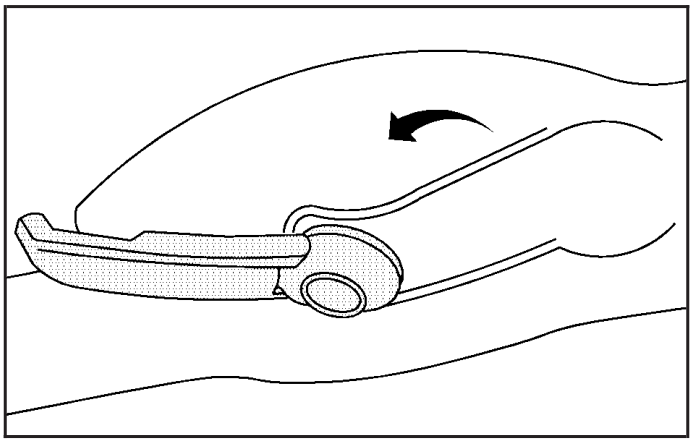

5. Pull down on the convertible top front latch, located above the inside rearview mirror, and turn it counterclockwise to unlatch it.

   Leave the latch open and turned to prevent damage.
6. Pull rearward on the side edge (B) of the convertible top and pull it off of the windshield frame.
7. Push the convertible top down into the trunk (E).

Downloaded from www.Manualslib.com manuals search engine

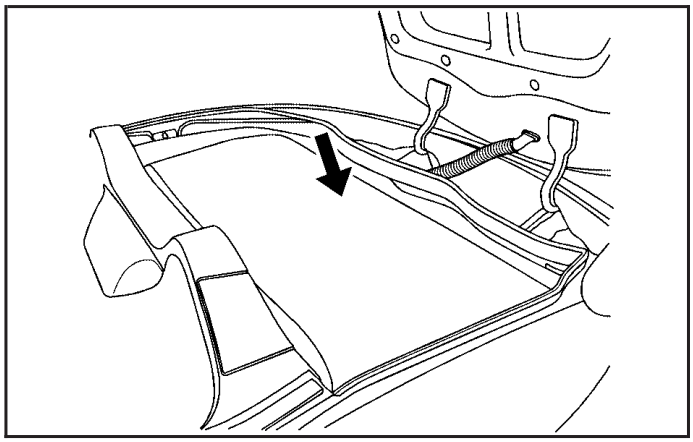

8. After the top is stored, as shown, push on the convertible top to ensure that the top is fully retracted and securely stored.
9. Close the trunk (E) by pressing down from the rear center of it with a swift, firm motion.

Do not operate the rear defogger when the convertible top is down.

Raising the Manual Convertible Top

1. Park on a level surface, set the parking brake firmly and shift an automatic transmission into (P) Park. Shift a manual transmission into (1) First or (R) Reverse.
2. Turn off the ignition, and lower the windows.
3. Push the trunk release button located in the glove box, or on the remote keyless entry, if equipped.
4. Open the trunk.

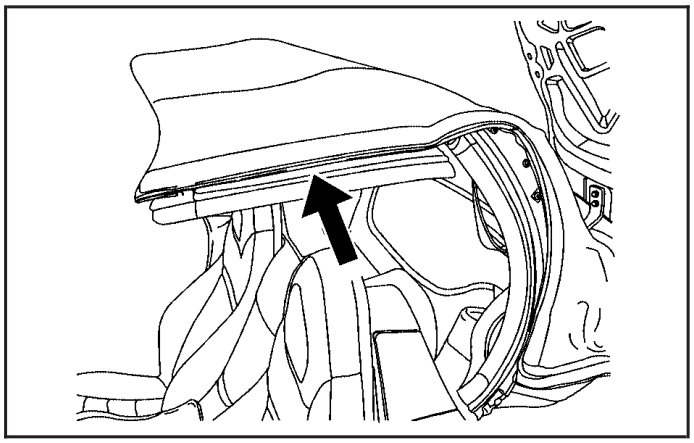

5. Pull the convertible top forward by firmly gripping the side edge (B) and applying a brisk upward and forward motion to get the top in the full-up position.

Downloaded from www.Manualslib.com manuals search engine

6. Pull the front edge (A) of the convertible top forward from the outside of the vehicle, or push the front edge (A) of the convertible top forward from the inside of the vehicle.
7. Turn the top front latch handle clockwise to latch the convertible top.
8. Make sure the lower seal pins (C) are correctly aligned and inserted.
9. Close the trunk by pressing down on the rear center with a swift, firm motion.

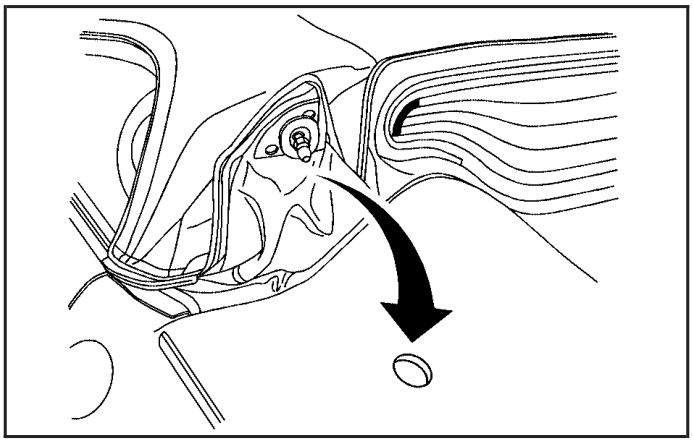

10. At the rear edge of the convertible top, press down on the two buttresses (C) to latch them into the top of the trunk.

Downloaded from www.Manualslib.com manuals search engine

✍ NOTES

Downloaded from www.Manualslib.com manuals search engine

Section 4 Instrument Panel

Instrument Panel Overview 4-3
Hazard Warning Flashers 4-3
Horn 4-3
Tilt Wheel 4-3
Turn Signal/Multifunction Lever 4-4
Turn and Lane-Change Signals 4-4
Headlamp High/Low-Beam Changer 4-5
Flash-to-Pass 4-5
Windshield Wipers 4-5
Windshield Washer 4-6
Cruise Control 4-7
Headlamps 4-9
Headlamps on Reminder 4-10
Daytime Running Lamps (DRL) 4-10
Fog Lamps 4-11
Instrument Panel Brightness 4-11
Entry/Exit Lighting 4-11
Mirror Reading Lamps 4-11
Battery Run-Down Protection 4-12
Accessory Power Outlet(s) 4-12
Ashtray(s) and Cigarette Lighter 4-13
Climate Controls 4-13
Climate Control System 4-13
Outlet Adjustment 4-17
Warning Lights, Gages, and Indicators 4-17
Instrument Panel Cluster 4-18
Speedometer and Odometer 4-19
Tachometer 4-19
Safety Belt Reminders 4-20
Airbag Readiness Light 4-21
Passenger Airbag Status Indicator 4-22
Charging System Light 4-23
Brake System Warning Light 4-23
Antilock Brake System (ABS) Warning Light 4-24
Electronic Stability Control (ESC)/
Traction Control System (TCS) Indicator/
Warning Light 4-25
Engine Coolant Temperature Warning Light 4-26
Low Coolant Warning Light 4-26
Tire Pressure Light 4-27
Malfunction Indicator Lamp 4-27
Oil Pressure Light 4-30
Security Light 4-31
Highbeam On Light 4-31
Trunk Ajar Light 4-31
Fuel Gage 4-32
Low Fuel Warning Light 4-32

Downloaded from www.Manualslib.com manuals search engine

Section 4 Instrument Panel

Driver Information Center (DIC) 4-33
DIC Operation and Displays 4-33
DIC Warnings and Messages 4-36
DIC Vehicle Personalization 4-40
Audio System(s) 4-45
Setting the Clock 4-46
Radio(s) 4-48
Using an MP3 4-60
XM Radio Messages 4-67
Bluetooth® 4-69
Theft-Deterrent Feature 4-79
Audio Steering Wheel Controls 4-79
Radio Reception 4-81
Fixed Mast Antenna 4-82
XM™ Satellite Radio Antenna System 4-82
Chime Level Adjustment 4-82

Downloaded from www.Manualslib.com manuals search engine

Instrument Panel Overview

Hazard Warning Flashers

⚠ **(Hazard Warning Flasher):** Press this button located on the instrument panel, to make the front and rear turn signal lamps flash on and off. This warns others that you are having trouble.

Press ⚠ again to turn the flashers off.

Horn

To sound the horn, press the center pad on the steering wheel.

Tilt Wheel

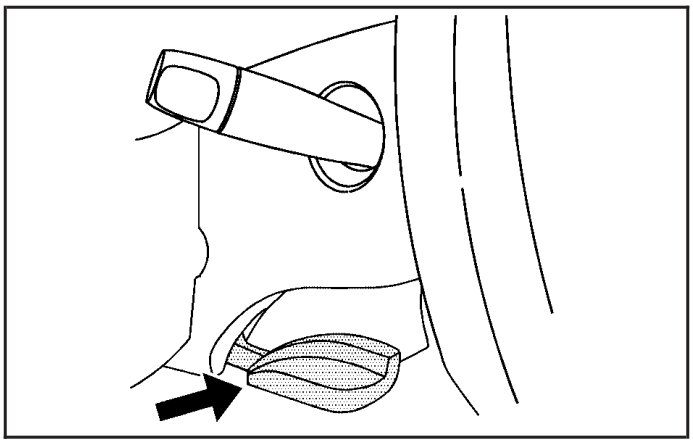

The tilt wheel lever is located on the left side of the steering column.

To adjust the steering wheel:

1. Pull the lever down.
2. Move the steering wheel up or down into a comfortable position.
3. Pull the lever up to lock the steering wheel in place.

Downloaded from www.Manualslib.com manuals search engine

Turn Signal/Multifunction Lever

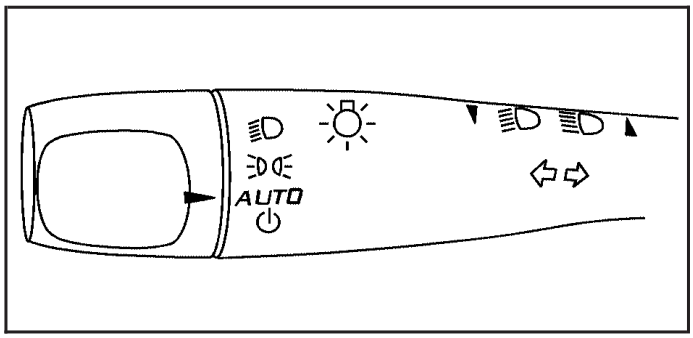

The lever on the left side of the steering column operates the following:

⇦⇨ **:** Turn and Lane-Change Signals

: Headlamp High/Low-Beam Changer

: Exterior Lamp Control

Flash-to-Pass.

Information for these features is on the pages following.

Turn and Lane-Change Signals

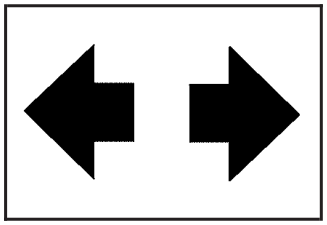

An arrow on the instrument panel cluster flashes in the direction of the turn or lane change.

Move the lever all the way up or down to signal a turn.

Raise or lower the lever until the arrow starts to flash to signal a lane change. Hold it there until the lane change is complete.

The lever returns to its starting position when it is released.

If after signaling a turn or a lane change the arrows flash rapidly or do not come on, a signal bulb could be burned out.

Have the bulbs replaced. If the bulb is not burned out, check the fuse. See *Fuses and Circuit Breakers on page 6-99*.

Downloaded from www.Manualslib.com manuals search engine

Headlamp High/Low-Beam Changer

To change the headlamps from low beam to high beam, push the turn signal lever away from you.

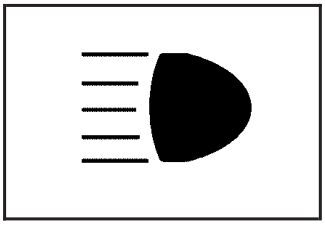

This indicator light appears on the instrument panel cluster when the high beams are on.

To change the headlamps from high beam to low beam, pull the turn signal lever toward you.

Flash-to-Pass

To signal to a driver in front of you that you want to pass, pull the turn signal/multifunction lever until the high-beam headlamps come on. Then release the lever to turn them off.

Windshield Wipers

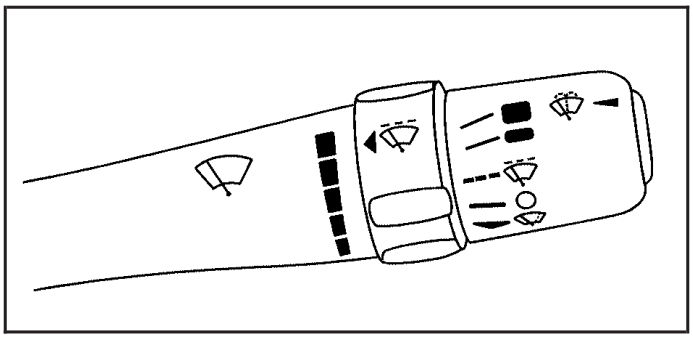

The windshield wiper lever is on the right side of the steering column.

Move the lever to control the windshield wipers.

(Off): Turns the windshield wipers off.

(Intermittent; Speed Sensitive Wipers): For intermittent or speed sensitive operation. The amount of delay time varies between wiping cycles due to the delay setting selected or the speed of the vehicle. As vehicle speed is increased or decreased, the wiper interval also increases or decreases.

Downloaded from www.Manualslib.com manuals search engine

(Delay): Move the lever to the position, then turn the band up for more frequent wipes or down for less frequent wipes.

(Low Speed): Slow wipes.

(High Speed): Fast wipes.

(Mist): Single wipe, move the lever down, then release it. Several wipes, hold the lever down.

Clear ice and snow from the wiper blades before using them.

If frozen to the windshield, carefully loosen or thaw them. Damaged wiper blades should be replaced.

Heavy snow or ice can overload the wiper motor. A circuit breaker stops the motor until it cools. If the motor gets stuck, turn the wipers off, clear away the snow or ice, and then turn the wipers back on.

As an added safety feature, if the wipers are on for more than 15 seconds, the vehicle's headlamps turn on automatically. They turn off 15 seconds after the wipers are turned off.

Windshield Washer

Press the button at the end of the windshield wiper lever until the washers begin.

⚠ WARNING:

In freezing weather, do not use your washer until the windshield is warmed. Otherwise the washer fluid can form ice on the windshield, blocking your vision.

When the button is released, the washers stop, but the wipers continue to wipe about three times or resume the previous speed.

Downloaded from www.Manualslib.com manuals search engine

Cruise Control

For vehicles with cruise control, a speed of about 25 mph (40 km/h) or more can be maintained without keeping your foot on the accelerator. Cruise control does not work at speeds below 25 mph (40 km/h).

⚠ WARNING:

Cruise control can be dangerous where you cannot drive safely at a steady speed. So, do not use the cruise control on winding roads or in heavy traffic.

Cruise control can be dangerous on slippery roads. On such roads, fast changes in tire traction can cause excessive wheel slip, and you could lose control. Do not use cruise control on slippery roads.

Setting Cruise Control

⚠ WARNING:

If you leave your cruise control on when you are not using cruise, you might hit a button and go into cruise when you do not want to. You could be startled and even lose control. Keep the cruise control switch off until you want to use cruise control.

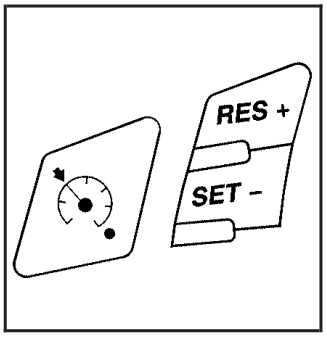

The cruise control buttons are located on the left side of the steering wheel.

Downloaded from www.Manualslib.com manuals search engine

(On/Off): Press to turn the cruise control system on and off.

RES+ (Resume): Press to resume a set speed and to accelerate the speed.

SET– (Set): Press to set a speed and to decrease the speed.

To set a speed do the following:

1. Press to turn cruise control on. The indicator light on the button will come on.
2. Get to the desired speed.
3. Press the SET– control button and release it. The CRUISE ENGAGED message will appear on the Driver Information Center (DIC) to show the system is engaged.
4. Take your foot off the accelerator pedal.

When you apply the brakes or depress the clutch, the cruise control will shut off.

Resuming a Set Speed

If the cruise control is at a desired speed and then the brake is applied, this disengages the cruise control. But it does not need to be reset. Once the vehicle is going about 25 mph (40 km/h) or more, press the RES+ button briefly.

This takes you back up to the previously chosen speed and stays there.

Increasing Speed While Using Cruise Control

There are two ways to increase speed.

1. Disengage the cruise control by applying the brake pedal but do not turn it off. Accelerate to a higher speed and reset the cruise control.
2. If the cruise control system is already engaged, press the RES+ button. Press it until the desired speed is reached, and then release the button. To increase the vehicle speed in small amounts, press the RES+ button briefly and then release it. Each time this is done, the vehicle goes about 1 mph (1.6 km/h) faster.

Reducing Speed While Using Cruise Control

If the cruise control system is already engaged,

- Push and hold the SET– part of the button until the lower speed desired is reached, then release it.
- To slow down in small amounts, push the SET– part of the button briefly. Each time this is done, the vehicle goes about 1 mph (1.6 km/h) slower.

Downloaded from www.Manualslib.com manuals search engine

Passing Another Vehicle While Using Cruise Control

Use the accelerator pedal to increase the vehicle's speed. When you take your foot off the pedal, the vehicle will slow down to the cruise control speed set earlier.

Using Cruise Control on Hills

How well the cruise control works on hills depends upon the vehicle speed, load, and the steepness of the hills. When going up steep hills, you might have to step on the accelerator pedal to maintain the vehicle speed. When going downhill, you might have to brake or shift to a lower gear to keep the vehicle speed down. When the brakes are applied the cruise control will turn off.

Ending Cruise Control

To end cruise control, step lightly on the brake pedal or the clutch pedal if the vehicle has a manual transmission.

Stepping on the brake pedal or clutch pedal will only end the current cruise control session.

Press to turn the system completely off.

Erasing Speed Memory

The cruise control set speed memory is erased when the cruise control or the ignition is turned off.

Headlamps

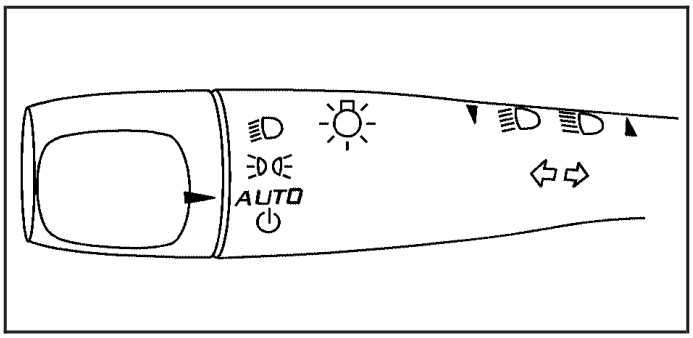

The lever on the left side of the steering column operates the exterior lamps.

The exterior lamp switch has the following four positions:

(Headlamps): Turns on the headlamps, parking lamps, and taillamps.

(Parking Lamps): Turns on the parking lamps and taillamps only.

AUTO (Automatic Headlamp System): Automatically turns on the Daytime Running Lamps (DRL) during daytime, and the headlamps, parking lamps, and taillamps at night.

Downloaded from www.Manualslib.com manuals search engine

(Off/On): Turns the Automatic Headlamp System on or off. In Canada, this applies to vehicles with an automatic transmission set to P (Park) and manual transmission vehicles with the parking brake engaged.

When operating in AUTO, a brief turn of the switch to off/on will turn off the Automatic Headlamp System. An AUTO LIGHTS OFF message displays on the Driver Information Center (DIC) and a chime will sound. Turning the switch to off/on again will turn the Automatic Headlamp System back on. An AUTO LIGHTS ON message will display on the Driver Information Center (DIC).

The Automatic Headlamp System is always turned on at the beginning of an ignition cycle for vehicles with manual transmission. When the parking brake is engaged, the automatic headlamps will turn off.

For vehicles with an automatic transmission, when the shift lever is shifted out of P (Park), the Automatic Headlamp System turns on. Shifting the lever back to P (Park) will turn off the automatic headlamp system.

Headlamps on Reminder

If the drivers door is opened with the ignition off and the lamps on, a warning chime will sound. This indicates that the headlamps are still on.

Daytime Running Lamps (DRL)

Daytime Running Lamps (DRL) can make it easier for others to see the front of your vehicle during the day. Fully functional daytime running lamps are required on all vehicles first sold in Canada.

The vehicle has a light sensor on top of the instrument panel that helps control the DRL. Do not cover this sensor or the headlamps will come on when they are not needed.

The DRL system makes both low beam headlamps turn on at reduced intensity when the following conditions are met:

- The ignition is on.
- The exterior lamp control is turned to AUTO.
- The light sensor detects daytime light.
- The shift lever is not in P (Park).

While the DRL system is on, the taillamps, sidemarker lamps, and instrument panel lights will not be on.

The DRL system turns off on U.S. vehicles by using the on/off switch for one ignition cycle, if the vehicle is in the P (Park) position, or if the vehicle speed is less than 5 mph (8 km/h) after the vehicle is started.

Downloaded from www.Manualslib.com manuals search engine

For vehicles first sold in Canada the DRL system will turn off when a automatic transmission vehicle is in the P (Park) position or the park brake is set on a manual transmission vehicle and the vehicle speed is less than 8 mph (13 km/h).

The regular headlamp system should be turned on when it is needed.

Fog Lamps

For vehicles with fog lamps, the button is located on the instrument panel, to the right of the steering wheel.

The ignition must be on to use the fog lamps.

: Press to turn the fog lamps on and off. An indicator light on the button comes on when the fog lamps are on.

The parking lamps automatically turn on and off when the fog lamps are turned on and off.

The fog lamps will turn off while the high-beam headlamps are turned on.

Some localities have laws that require the headlamps to be on along with the fog lamps.

Instrument Panel Brightness

The control for this feature is located on the instrument panel to the right of the steering wheel.

Instrument Panel Brightness: Turn the knob clockwise or counterclockwise to brighten or dim the lights.

Entry/Exit Lighting

The lamps inside the vehicle come on when any door is opened. These lamps will fade out after about 20 seconds after all of the doors have been closed or when the ignition is turned on. These lamps will also go on when you press the trunk release, unlock symbol button or the horn symbol on the Remote Keyless Entry System (RKE) Transmitter.

The lamps inside the vehicle will stay on for about 20 seconds after the key is removed from the ignition to provide an illuminated exit.

Mirror Reading Lamps

The vehicle has reading lamps on the rearview mirror. Press the button near each lamp on the mirror to turn the reading lamps on and off.

Downloaded from www.Manualslib.com manuals search engine

Battery Run-Down Protection

The vehicle has a battery saver feature designed to protect the vehicle's battery.

When any interior lamp is left on and the ignition is turned off, the battery rundown protection system automatically turns the lamp off after 20 minutes. This prevents draining of the battery.

Accessory Power Outlet(s)

The accessory power outlet can be used to connect electrical equipment, such as a cellular phone.

The accessory power outlet is located on the instrument panel, below the radio.

To use the outlet, remove the cover. When not in use, always cover the outlet with the protective cap.

Notice: **Leaving electrical equipment plugged in for an extended period of time while the vehicle is off will drain the battery. Power is always supplied to the outlets. Always unplug electrical equipment when not in use and do not plug in equipment that exceeds the maximum 20 ampere rating.**

Certain electrical accessories may not be compatible with the accessory power outlet and could result in blown vehicle or adapter fuses. If you experience a problem, see your dealer/retailer for additional information on the accessory power outlet.

Notice: **Adding any electrical equipment to the vehicle can damage it or keep other components from working as they should. The repairs would not be covered by the vehicle warranty. Do not use equipment exceeding maximum amperage rating of 20 amperes. Check with your dealer/retailer before adding electrical equipment.**

When adding electrical equipment, be sure to follow the installation instructions included with the equipment.

Notice: **Improper use of the power outlet can cause damage not covered by the vehicle warranty. Do not hang any type of accessory or accessory bracket from the plug because the power outlets are designed for accessory power plugs only.**

Downloaded from www.Manualslib.com manuals search engine

Ashtray(s) and Cigarette Lighter

The vehicle may have an ashtray and cigarette lighter. To use the lighter, located on the instrument panel below the radio, push it in all the way and let go. When it is ready, it will pop back out by itself.

Notice: **Holding a cigarette lighter in while it is heating does not let the lighter back away from the heating element when it is hot. Damage from overheating can occur to the lighter or heating element, or a fuse could be blown. Do not hold a cigarette lighter in while it is heating.**

Notice: **If papers, pins, or other flammable items are put in the ashtray, hot cigarettes or other smoking materials could ignite them and possibly damage the vehicle. Never put flammable items in the ashtray.**

Climate Controls

Climate Control System

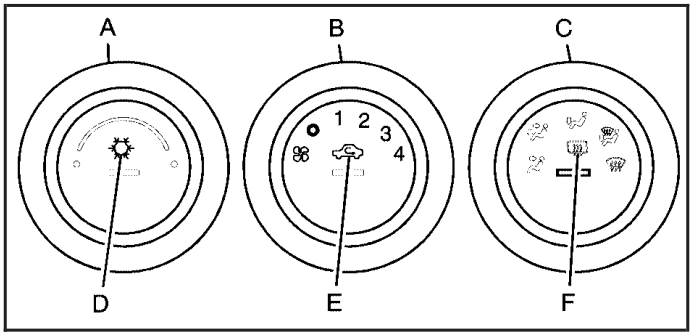

Climate Control System with Air Conditioning shown, Climate Control System without Air Conditioning similar

A. Temperature Control
B. Fan Control
C. Air Delivery Mode Control
D. Air Conditioning
E. Recirculation
F. Rear Window Defogger

Downloaded from www.Manualslib.com manuals search engine

The heating and ventilation of the vehicle can be controlled with this system. For vehicles with air conditioning, you will also be able to control the cooling of the vehicle.

(Off): Turn the fan control to this position to turn the fan off.

Temperature Control: Turn clockwise or counterclockwise to increase or decrease the temperature.

(Fan Control): Turn clockwise or counterclockwise to increase or decrease the fan speed.

Air Delivery Mode Control: Turn clockwise or counterclockwise to change the direction of the airflow inside the vehicle.

Select from the following modes:

(Vent): Air is directed to the instrument panel outlets.

(Bi-Level): Air is directed to the instrument panel, floor, defroster and side window outlets. Cooler air is directed to the upper outlets and warmer air to the floor outlets.

(Floor): Air is directed to the floor outlets, with some directed to the side window and defroster outlets. If low or no airflow is on the passenger side, make sure that the carpet covering is tucked under floor outlets.

(Floor/Defog): This mode clears the windows of fog or moisture. Air is directed to the windshield, side window, and floor outlets. In this mode, the system runs the air conditioning compressor unless the outside temperature is near freezing or below.

(Defrost): This mode removes fog or frost from the windshield more quickly. Air is directed to the windshield and side window outlets. In this mode, the system runs the air conditioning compressor unless the outside temperature is near or below freezing.

Do not drive the vehicle until all the windows are clear.

To prevent fogging on the inside of the windows in modes other than floor/defog and defrost, make sure the air conditioning compressor is on and recirculation mode is off.

Downloaded from www.Manualslib.com manuals search engine

(Air Conditioning): Press to turn the air conditioning system on or off. An indicator light comes on to show that the air conditioning is on. This setting cools and dehumidifies the air entering the vehicle.

The air conditioning does not work if the fan is turned off. If air conditioning is selected with fan off, the indicator light flashes three times and then turns off.

There could be a slight change in engine performance when the air conditioning compressor turns off and turns on again. This is normal. The system is designed to make adjustments to help with fuel economy while still maintaining the selected temperature.

Air conditioning does not operate at temperatures below 40°F (4°C). In temperatures above 40°F (4°C), the air conditioning cannot be turned off in defrost, floor/defog, and recirculation modes because it helps to remove moisture from the vehicle. It also helps to keep the windows clear.

On hot days, open the windows to let the hot inside air escape; then close them. This helps reduce the time it takes for the vehicle to cool down. It also helps the system to operate more efficiently.

For quick cool down on hot days, do the following:

1. Select .
2. Select .
3. Select the air conditioning to on.
4. Select the coolest temperature.
5. Select the highest fan speed.

Using these settings together for long periods of time can cause the air inside of the vehicle to become too dry. To prevent this from happening, after the air in the vehicle has cooled, turn the recirculation mode off.

Downloaded from www.Manualslib.com manuals search engine

The air conditioning system removes moisture from the air, so a small amount of water might drip under the vehicle while idling or after turning off the engine. This is normal.

(Recirculation): Press to turn the recirculation mode on or off. An indicator light comes on to show that recirculation is on.

This mode recirculates and helps to quickly cool the air inside the vehicle. It can be used to help prevent outside air and odors from entering the vehicle.

Recirculation is available in the bi-level and vent modes. If recirculation is selected in either floor/heat, floor/defog, or defrost mode, the indicator light flashes three times indicating it is not available in that mode.

Rear Window Defogger

The rear window defogger uses a warming grid to remove fog or frost from the rear window.

(Rear Defogger): Press to turn the rear window defogger on or off. An indicator light comes on to show that the rear window defogger is on. Be sure to clear as much snow from the rear window as possible.

The rear window defogger turns off about fifteen minutes after the knob is pressed. If turned on again, the defogger runs for about seven and one-half minutes before turning off. If vehicle speed is greater than 50 mph (80 kph) and the rear defogger is active, it remains on as long as the speed is greater than 50 mph (80 kph). The defogger can also be turned off by turning off the engine.

Do not use the rear defogger when the convertible top is down.

Notice: **Do not use anything sharp on the inside of the rear window. If you do, you could cut or damage the warming grid, and the repairs would not be covered by the vehicle warranty. Do not attach a temporary vehicle license, tape, a decal or anything similar to the defogger grid.**

Downloaded from www.Manualslib.com manuals search engine

Outlet Adjustment

Use the air outlets located in the center and on the side of the instrument panel to direct the airflow.

The vehicle has air outlets that allow you to adjust the direction and amount of airflow inside the vehicle. Move the louvers up or down or turn them clockwise or counterclockwise to change the direction of the airflow.

The vehicle has flow through ventilation that allows outside air to be forced through the ventilation system when the vehicle is moving. Outside air will enter the vehicle when the air conditioning fan is running. Flow through ventilation can be stopped in vent and bi-level modes by pressing the recirculation button.

Operation Tips

- Clear away any ice, snow or leaves from the air inlets at the base of the windshield that may block the flow of air into the vehicle.
- Use of non-GM approved hood deflectors may adversely affect the performance of the system.
- Keep the path under the front seats clear of objects to help circulate the air inside of the vehicle more effectively.

Warning Lights, Gages, and Indicators

Warning lights and gages can signal that something is wrong before it becomes serious enough to cause an expensive repair or replacement. Paying attention to the warning lights and gages could prevent injury.

Warning lights come on when there might be or there is a problem with one of the vehicle's functions. Some warning lights come on briefly when the engine is started to indicate they are working.

Gages can indicate when there might be or there is a problem with one of the vehicle's functions. Often gages and warning lights work together to indicate a problem with the vehicle.

When one of the warning lights comes on and stays on while driving, or when one of the gages shows there could be a problem, check the section that explains what to do. Follow this manual's advice. Waiting to do repairs can be costly and even dangerous.

Downloaded from www.Manualslib.com manuals search engine

Instrument Panel Cluster

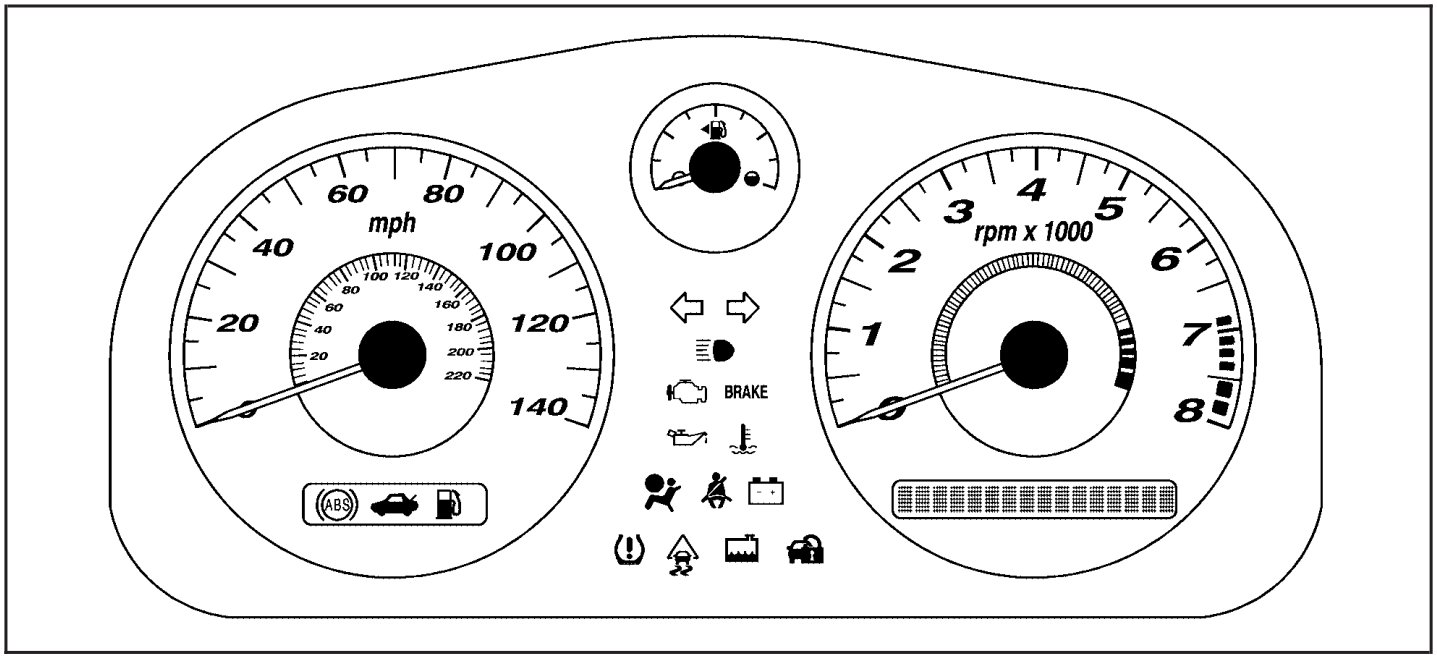

United States Cluster shown, Canada and Turbo model similar

Downloaded from www.Manualslib.com manuals search engine

Speedometer and Odometer

The speedometer shows the vehicle's speed in both miles per hour (mph) and kilometers per hour (km/h).

The vehicle's odometer works together with the Driver Information Center (DIC). For vehicles with a Trip A and Trip B odometer, it can be set. See "Trip Information" under *DIC Operation and Displays on page 4-33*.

The odometer mileage can be checked while the vehicle is not running. The mileage briefly displays when the driver's door is opened.

If the vehicle ever needs a new odometer installed, the new one will be set to the correct mileage total of the old odometer.

Tachometer

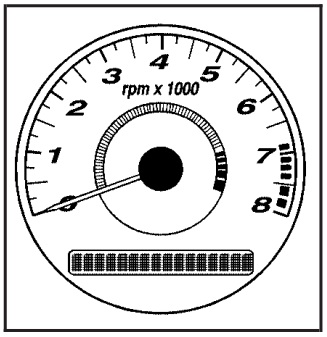

The tachometer displays the engine speed in revolutions per minute (rpm).

Notice: **If the engine is operated while the tachometer is in the shaded warning area, the vehicle could be damaged, and the damages would not be covered by the vehicle warranty. Do not operate the engine with the tachometer in the shaded warning area.**

Downloaded from www.Manualslib.com manuals search engine

Safety Belt Reminders

Safety Belt Reminder Light

When the engine is started, a chime sounds for several seconds to remind a driver to fasten the safety belt, unless the driver safety belt is already buckled.

The safety belt light comes on and stays on for several seconds, then flashes for several more.

This chime and light are repeated if the driver remains unbuckled and the vehicle is in motion. If the driver safety belt is already buckled, neither the chime nor the light comes on.

Passenger Safety Belt Reminder Light

Several seconds after the engine is started, a chime sounds for several seconds to remind the front passenger to buckle their safety belt. The passenger safety belt light, located on the instrument panel, comes on and stays on for several seconds and then flashes for several more.

This chime and light are repeated if the passenger remains unbuckled and the vehicle is in motion.

If the passenger safety belt is buckled, neither the chime nor the light comes on.

The front passenger safety belt warning light and chime may turn on if an object is put on the seat such as a briefcase, handbag, grocery bag, laptop or other electronic device. To turn off the warning light and or chime, remove the object from the seat or buckle the safety belt.

Downloaded from www.Manualslib.com manuals search engine

Airbag Readiness Light

The system checks the airbag's electrical system for possible malfunctions. If the light stays on it indicates there is an electrical problem. The system check includes the airbag sensor, the pretensioners, the airbag modules, the wiring and the crash sensing and diagnostic module. For more information on the airbag system, see *Airbag System on page 2-36*.

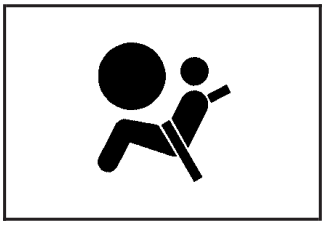

The airbag readiness light flashes for a few seconds when the engine is started. If the light does not come on then, have it fixed immediately.

⚠ WARNING:

If the airbag readiness light stays on after the vehicle is started or comes on while driving, it means the airbag system might not be working properly. The airbags in the vehicle might not inflate in a crash, or they could even inflate without a crash. To help avoid injury, have the vehicle serviced right away.

If there is a problem with the airbag system, an airbag Driver Information Center (DIC) message can also come on. See *DIC Warnings and Messages on page 4-36* for more information.

Downloaded from www.Manualslib.com manuals search engine

Passenger Airbag Status Indicator

The vehicle has the passenger sensing system. See *Passenger Sensing System on page 2-43* for important safety information. The instrument panel has a passenger airbag status indicator.

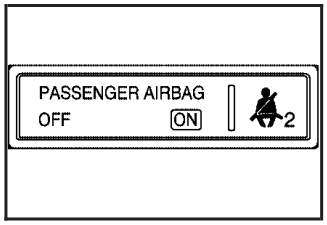

United States

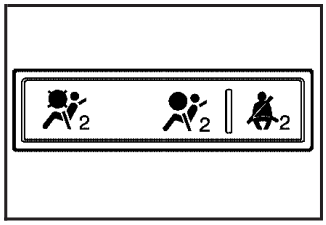

Canada

When the vehicle is started, the passenger airbag status indicator will light ON and OFF, or the symbol for on and off, for several seconds as a system check. Then, after several more seconds, the status indicator will light either ON or OFF, or either the on or off symbol to let you know the status of the right front passenger frontal airbag.

If the word ON or the on symbol is lit on the passenger airbag status indicator, it means that the right front passenger frontal airbag is enabled (may inflate).

If the word OFF or the off symbol is lit on the airbag status indicator, it means that the passenger sensing system has turned off the right front passenger frontal airbag.

If, after several seconds, both status indicator lights remain on, or if there are no lights at all, there may be a problem with the lights or the passenger sensing system. See your dealer/retailer for service.

⚠ WARNING:

If the airbag readiness light ever comes on and stays on, it means that something may be wrong with the airbag system. To help avoid injury to yourself or others, have the vehicle serviced right away. See *Airbag Readiness Light on page 4-21* for more information, including important safety information.

Downloaded from www.Manualslib.com manuals search engine

Charging System Light

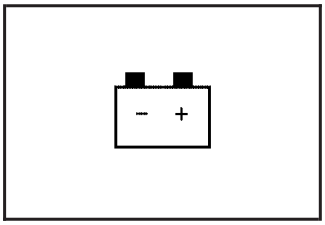

This light comes on briefly when the ignition key is turned to START, but the engine is not running, as a check to show it is working.

If it does not, have the vehicle serviced by your dealer/retailer.

The light should go out once the engine starts. If it stays on, or comes on while driving, there could be a problem with the charging system. A charging system message in the Driver Information Center (DIC) can also appear. See *DIC Warnings and Messages on page 4-36* for more information. This light could indicate that there are problems with a generator drive belt, or that there is an electrical problem. Have it checked right away. If the vehicle must be driven a short distance with the light on, turn off accessories, such as the radio and air conditioner.

Brake System Warning Light

The vehicle's hydraulic brake system is divided into two parts. If one part is not working, the other part can still work and stop the vehicle. For good braking both parts need to be working well.

If the warning light comes on, there is a brake problem. Have the brake system inspected right away.

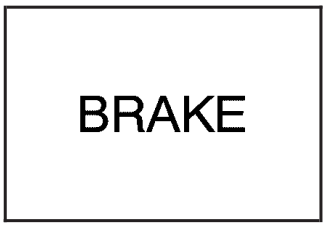

United States

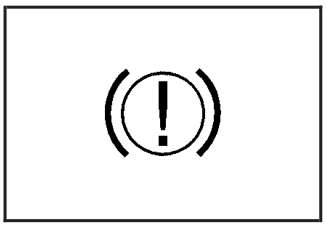

Canada

This light should come on briefly when the engine is started. If it does not come on then, have it fixed so it will be ready to warn if there is a problem.

Downloaded from www.Manualslib.com manuals search engine

When the ignition is on, the brake system warning light also comes on when the parking brake is set. The light stays on if the parking brake does not fully release. If it stays on after the parking brake is fully released, it means the vehicle has a brake problem.

If the light comes on while driving, pull off the road and stop carefully. Make sure the parking brake is fully released. The pedal might be harder to push or, the pedal could go closer to the floor. It can take longer to stop. Try turning off and restarting the vehicle one or two times, if the light is still on, have the vehicle towed for service. See *Towing Your Vehicle on page 5-28*.

⚠ WARNING:

The brake system might not be working properly if the brake system warning light is on. Driving with the brake system warning light on can lead to a crash. If the light is still on after the vehicle has been pulled off the road and carefully stopped, have the vehicle towed for service.

Antilock Brake System (ABS) Warning Light

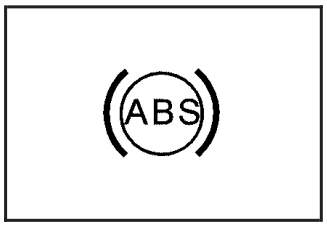

The Antilock Brake System (ABS) light comes on briefly when the engine is started.

If it does not, have the vehicle serviced by your dealer/retailer. If the system is working normally the indicator light then goes off.

If the ABS light stays on, turn the ignition off. If the light comes on while driving, stop as soon as it is safely possible and turn the ignition off. Then start the engine again to reset the system. If the ABS light stays on, or comes on again while driving, the vehicle needs service. If the regular brake system warning light is not on, the vehicle still has brakes, but not antilock brakes. If the regular brake system warning light is also on, the vehicle does not have antilock brakes and there is a problem with the regular brakes. See *Brake System Warning Light on page 4-23*.

For vehicles with a Driver Information Center (DIC), see *DIC Warnings and Messages on page 4-36* for all brake related DIC messages.

Downloaded from www.Manualslib.com manuals search engine

Electronic Stability Control (ESC)/ Traction Control System (TCS) Indicator/Warning Light

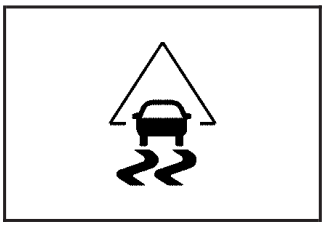

The Electronic Stability Control (ESC) system or the Traction Control System (TCS) indicator/ warning light comes on briefly when the engine is started.

If it does not, have the vehicle serviced by the dealer/retailer. If the system is working normally the indicator light goes off.

This light, along with the appropriate Driver Information Center (DIC) messages, indicates when the ESC system and the TCS are working or are disabled.

If the light comes on and stays on, the TCS and potentially the ESC system have been disabled. Check the DIC messaging to determine which system is turned off, or not working. If the system is not working, the vehicle needs service. See your dealer/retailer.

When the TCS is disabled, wheel spin is not limited. When the ESC system is disabled, the system does not aid in maintaining vehicle directional control.

If the light comes on and flashes, the TCS or the ESC system is actively working. When the LOW TRACTION message appears, the system is limiting wheel spin. When the ESC ACTIVE message appears, the system is aiding in maintaining vehicle directional control.

See *Electronic Stability Control (ESC) on page 5-6* and *Traction Control System (TCS) on page 5-9* for more information.

See *DIC Warnings and Messages on page 4-36* for more information on the messages associated with this light.

Downloaded from www.Manualslib.com manuals search engine

Engine Coolant Temperature Warning Light

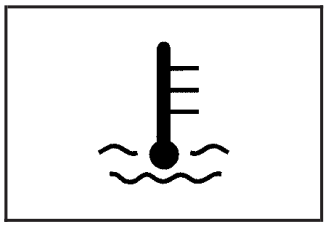

This light comes on briefly while starting the vehicle.

If it does not, have the vehicle serviced by the dealer/retailer. If the system is working normally the indicator light goes off.

Notice: **Driving with the engine coolant temperature warning light on could cause the vehicle to overheat. See *Engine Overheating on page 6-29*. The vehicle's engine could be damaged, and it might not be covered by the vehicle warranty. Never drive with the engine coolant temperature warning light on.**

The engine coolant temperature warning light comes on when the engine has overheated.

If this happens pull over and turn off the engine as soon as possible. See *Engine Overheating on page 6-29* for more information.

Low Coolant Warning Light

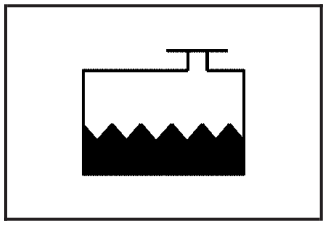

This light comes on briefly when the ignition is turned on.

If it does not, have the vehicle serviced by the dealer/retailer. If the system is working normally the indicator light goes off.

Notice: **Driving with the low coolant warning light on could cause the vehicle to overheat. See "Engine Overheating" under *Engine Coolant on page 6-25*. The vehicle could be damaged and the damages might not be covered by the vehicle warranty.**

If this light comes on and stays on, the coolant level in the vehicle is low. If the light is on the vehicle could have a serious overheating problem.

See *Engine Coolant on page 6-25* for more information. Have the vehicle serviced by your dealer/retailer

Downloaded from www.Manualslib.com manuals search engine

Tire Pressure Light

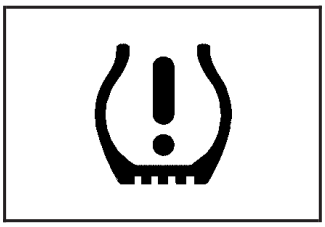

For vehicles with a tire pressure monitoring system, this light comes on briefly when the engine is started. It provides information about tire pressures and the Tire Pressure Monitoring System.

When the Light is On Steady

This indicates that one or more of the tires are significantly underinflated.

A tire pressure message in the Driver Information Center (DIC), can accompany the light. See *Driver Information Center (DIC) on page 4-33* for more information. Stop and check the tires as soon as it is safe to do so. If underinflated, inflate to the proper pressure. See *Inflation - Tire Pressure on page 6-54* for more information.

When the Light Flashes First and Then is On Steady

This indicates that there may be a problem with the Tire Pressure Monitor System. The light flashes for about a minute and stays on steady for the remainder of the ignition cycle. This sequence repeats with every ignition cycle. See *Tire Pressure Monitor Operation on page 6-56* for more information.

Malfunction Indicator Lamp

Check Engine Light

A computer system called OBD II (On-Board Diagnostics-Second Generation) monitors operation of the fuel, ignition, and emission control systems. It makes sure that emissions are at acceptable levels for the life of the vehicle, helping to produce a cleaner environment.

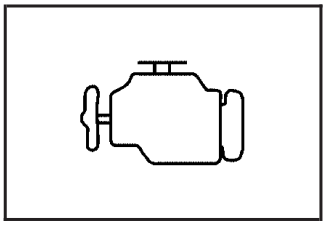

This light comes on when the ignition is on, but the engine is not running, as a check to show it is working. If it does not, have the vehicle serviced by your dealer/retailer.

Downloaded from www.Manualslib.com manuals search engine

If the check engine light comes on and stays on, while the engine is running, this indicates that there is an OBD II problem and service is required.

Malfunctions often are indicated by the system before any problem is apparent. Heeding the light can prevent more serious damage to the vehicle. This system assists the service technician in correctly diagnosing any malfunction.

Notice: **If the vehicle is continually driven with this light on, after a while, the emission controls might not work as well, the vehicle's fuel economy might not be as good, and the engine might not run as smoothly. This could lead to costly repairs that might not be covered by the vehicle warranty.**

Notice: **Modifications made to the engine, transmission, exhaust, intake, or fuel system of the vehicle or the replacement of the original tires with other than those of the same Tire Performance Criteria (TPC) can affect the vehicle's emission controls and can cause this light to come on. Modifications to these systems could lead to costly repairs not covered by the vehicle warranty. This could also result in a failure to pass a required Emission Inspection/Maintenance test. See** ***Accessories and Modifications on page 6-3*****.**

This light comes on during a malfunction in one of two ways:

Light Flashing: A misfire condition has been detected. A misfire increases vehicle emissions and could damage the emission control system on the vehicle. Diagnosis and service might be required.

The following can prevent more serious damage to the vehicle:

- Reduce vehicle speed.
- Avoid hard accelerations.
- Avoid steep uphill grades.

If the light continues to flash, when it is safe to do so, stop the vehicle. Find a safe place to park the vehicle. Turn the key off, wait at least 10 seconds, and restart the engine. If the light is still flashing, follow the previous steps and see your dealer/retailer for service as soon as possible.

Downloaded from www.Manualslib.com manuals search engine

Light On Steady: An emission control system malfunction has been detected on the vehicle. Diagnosis and service might be required.

An emission system malfunction might be corrected by doing the following:

- Make sure the fuel cap is fully installed. See *Filling the Tank on page 6-8*. The diagnostic system can determine if the fuel cap has been left off or improperly installed. A loose or missing fuel cap allows fuel to evaporate into the atmosphere. A few driving trips with the cap properly installed should turn the light off.
- If the vehicle has been driven through a deep puddle of water, the vehicle's electrical system might be wet. The condition is usually corrected when the electrical system dries out. A few driving trips should turn the light off.
- Make sure to fuel the vehicle with quality fuel. Poor fuel quality causes the engine not to run as efficiently as designed and may cause: stalling after start-up, stalling when the vehicle is changed into gear, misfiring, hesitation on acceleration, or stumbling on acceleration. These conditions might go away once the engine is warmed up.

  If one or more of these conditions occurs, change the fuel brand used. It will require at least one full tank of the proper fuel to turn the light off.

  See *Gasoline Octane on page 6-6*.

If none of the above have made the light turn off, have your dealer/retailer check the vehicle. The dealer/retailer has the proper test equipment and diagnostic tools to fix any mechanical or electrical problems that might have developed.

Downloaded from www.Manualslib.com manuals search engine

Emissions Inspection and Maintenance Programs

Some state/provincial and local governments have or might begin programs to inspect the emission control equipment on the vehicle. Failure to pass this inspection could prevent getting a vehicle registration.

Here are some things to know to help the vehicle pass an inspection:

- The vehicle will not pass this inspection if the check engine light is on with the engine running, or if the key is in the ON/RUN and the light is not on.
- The vehicle will not pass this inspection if the OBD II (on-board diagnostic) system determines that critical emission control systems have not been completely diagnosed by the system. The vehicle would be considered not ready for inspection. This can happen if the battery has recently been replaced or if the battery has run down. The diagnostic system is designed to evaluate critical emission control systems during normal driving. This can take several days of routine driving. If this has been done and the vehicle still does not pass the inspection for lack of OBD II system readiness, your dealer/retailer can prepare the vehicle for inspection.

Oil Pressure Light

⚠ WARNING:

Do not keep driving if the oil pressure is low. The engine can become so hot that it catches fire. Someone could be burned. Check the oil as soon as possible and have the vehicle serviced.

Notice: **Lack of proper engine oil maintenance can damage the engine. The repairs would not be covered by the vehicle warranty. Always follow the maintenance schedule in this manual for changing engine oil.**

Downloaded from www.Manualslib.com manuals search engine

This light comes on briefly while starting the engine. If it does not, have the vehicle serviced by your dealer/retailer. If the system is working normally the indicator light then goes off.

If the light comes on and stays on, it means that oil is not flowing through the engine properly. The vehicle could be low on oil and it might have some other system problem.

Security Light

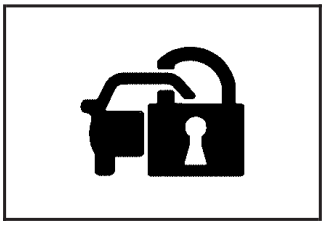

For information regarding this light and the vehicle's security system, see *Content Theft-Deterrent on page 3-14*.

Highbeam On Light

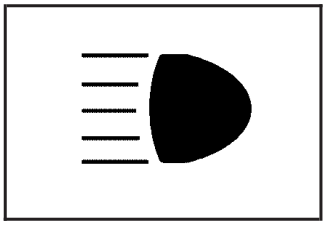

This light comes on when the high-beam headlamps are in use.

See *Headlamp High/Low-Beam Changer on page 4-5* for more information.

Trunk Ajar Light

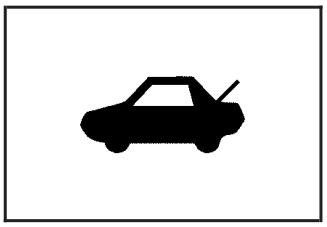

This light will come on and a chime will sound if the trunk is ajar.

Downloaded from www.Manualslib.com manuals search engine

Fuel Gage

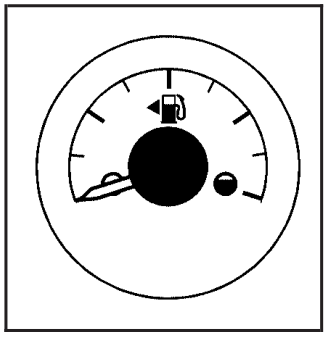

The fuel gage shows how much fuel the vehicle has left.

An arrow on the fuel gage indicates the side of the vehicle the fuel door is on.

Here are four things that customers ask about. None of these indicates a problem with the fuel gage:

- At the service station, the gas pump shuts off before the fuel gage reads full.
- It takes a little more or less fuel to fill up than the gage indicated. For example, the gage may have indicated the fuel tank was half full, but it actually took a little more or less than half the fuel tank's capacity to fill it.
- The gage moves a little while turning a corner or speeding up.
- The gage does not go back to empty when the ignition is turned off.

For the fuel tank capacity, see *Capacities and Specifications on page 6-104*.

Low Fuel Warning Light

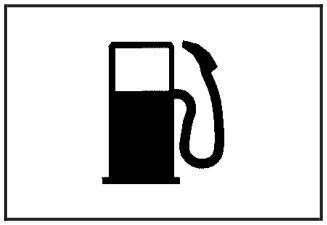

This light, below the fuel gage, comes on briefly when the engine is started.

This light also comes on when the fuel tank is low on fuel. When fuel is added, the light should go off. If it does not, have the vehicle serviced.

Downloaded from www.Manualslib.com manuals search engine

Driver Information Center (DIC)

Your vehicle has a Driver Information Center (DIC). The DIC display gives you the status of many of your vehicle's systems. The DIC is also used to display driver personalization menu modes and warning/status messages. All messages will appear in the DIC display, located at the bottom of the instrument panel cluster.

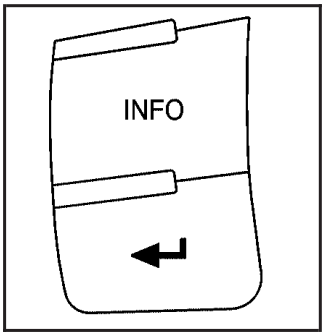

The DIC buttons are located on the left side of the steering wheel.

INFO (Information): Press this button to scroll through the vehicle information mode displays.

(Reset): Press this button to reset some vehicle information mode displays, select a personalization menu mode setting, or acknowledge a warning message.

Press and hold the information and reset buttons at the same time for one second, then release the buttons to enter the personalization menu. See *DIC Vehicle Personalization on page 4-40* for more information.

DIC Operation and Displays

The DIC comes on when the ignition is on. The DIC has different modes which can be accessed by pressing the DIC buttons. The button functions are detailed in the following.

Information Modes

INFO (Information): Press this button to scroll through the following vehicle information modes:

Odometer

Press the information button until the odometer displays. This mode shows the total distance the vehicle has been driven in either miles (mi) or kilometers (km).

To change the DIC display to English or metric units, see "UNITS" under *DIC Vehicle Personalization on page 4-40*.

Downloaded from www.Manualslib.com manuals search engine

TRIP A or TRIP B

Press the information button until TRIP A or TRIP B display. These modes show the current distance traveled since the last reset for each trip odometer in either miles (mi) or kilometers (km). Both odometers can be used at the same time.

To reset the trip odometer to zero, press and hold the reset button for a few seconds while the desired trip odometer is displayed.

FUEL RANGE

Press the information button until FUEL RANGE displays. This mode shows the remaining distance you can drive without refueling in either miles (mi) or kilometers (km). It is based on fuel economy and the fuel remaining in the tank.

When the fuel level is low, FUEL RANGE LOW displays.

The fuel economy data used to determine fuel range is an average of recent driving conditions. As your driving conditions change, this data is gradually updated. The FUEL RANGE mode cannot be reset.

MPG (L/100 KM) AVG (Average)

Press the information button until MPG (L/100 KM) AVG displays. This mode shows how many miles per gallon (mpg) or liters per 100 kilometers (L/100 km) your vehicle is getting based on current and past driving conditions.

To reset the average fuel economy, press and hold the reset button while MPG (L/100 KM) AVG is displayed. Average fuel economy is then calculated starting from that point. If the average fuel economy is not reset, it is continually updated each time you drive.

MPG (L/100 KM) INST (Instantaneous)

Press the information button until MPG (L/100 KM) INST displays. This mode shows the current fuel economy at a particular moment and changes frequently as driving conditions change. This mode shows the instantaneous fuel economy in miles per gallon (mpg) or liters per 100 kilometers (L/100 km). Unlike average fuel economy, this screen cannot be reset.

AV (Average) SPEED

Press the information button until AV SPEED displays. This mode shows the vehicle's average speed in miles per hour (mph) or kilometers per hour (km/h).

To reset the average vehicle speed, press and hold the reset button while AV SPEED is displayed.

Downloaded from www.Manualslib.com manuals search engine

OIL LIFE

Press the information button until OIL LIFE displays. The engine oil life system shows an estimate of the oil's remaining useful life. It shows 100% when the system is reset after an oil change. It alerts you to change the oil on a schedule consistent with your driving conditions.

In addition to the engine oil life system monitoring the oil life, additional maintenance is recommended in the Maintenance Schedule in this manual. See *Engine Oil on page 6-15* and *Scheduled Maintenance on page 7-3*.

Always reset the engine oil life system after an oil change. See "How to Reset the Engine Oil Life System" under *Engine Oil Life System on page 6-19*.

COOLANT

Press the information button until COOLANT displays. This mode shows the temperature of the engine coolant in either degrees Fahrenheit (°F) or degrees Celsius (°C).

Tire Pressure

On vehicles with the Tire Pressure Monitor System (TPMS), the pressure for each tire can be viewed in the DIC. The tire pressure is shown in either pounds per square inch (psi) or kilopascals (kPa). Press the information button until LF ## PSI (kPa) ## RF displays for the front tires. Press the information button again until LR ## PSI (kPa) ## RR displays for the rear tires.

If a low tire pressure condition is detected by the system while driving, a message advising you to check the tire pressure appears in the display. See *Inflation - Tire Pressure on page 6-54* and *DIC Warnings and Messages on page 4-36* for more information.

BOOST (Turbo Only)

If your vehicle has this feature, press the information button until BOOST displays. This mode shows a graphic that indicates the amount of boost the engine is receiving in either pounds per square inch (psi) or kilopascals (kPa).

Downloaded from www.Manualslib.com manuals search engine

DIC Warnings and Messages

These messages appear if there is a problem detected in one of your vehicle's systems.

A message clears when the vehicle's condition is no longer present. To acknowledge a message and clear it from the display, press and hold any of the DIC buttons. If the condition is still present, the warning message comes back on the next time the vehicle is turned off and back on. With most messages, a warning chime sounds when the message displays. Your vehicle may have other warning messages.

AUTO (Automatic) LIGHTS OFF

This message displays if the automatic headlamp system is disabled with the headlamp switch.

AUTO (Automatic) LIGHTS ON

This message displays if the automatic headlamp system is enabled with the headlamp switch.

BRAKE FLUID

This message displays, while the ignition is on, when the brake fluid level is low. The brake system warning light on the instrument panel cluster also comes on. See *Brake System Warning Light on page 4-23* for more information. Have the brake system serviced by your dealer/retailer as soon as possible.

CHANGE OIL SOON

This message displays when the life of the engine oil has expired and it should be changed.

When this message is acknowledged and cleared from the display, the engine oil life system must still be reset separately. See *Engine Oil Life System on page 6-19* and *Scheduled Maintenance on page 7-3* for more information.

CHECK GAS CAP

This message displays if the fuel cap has not been fully tightened. Recheck the fuel cap to make sure that it is on properly. A few driving trips with the cap properly installed should turn the message off.

COMPETITIVE MODE

If your vehicle has this feature, this message displays when the Competitive Driving mode is selected. The Traction Control System (TCS) will not be operating while in the Competitive Driving mode and the ESC/TCS light on the instrument panel cluster will be on solid. Adjust your driving accordingly. See *Electronic Stability Control (ESC) on page 5-6*, *Electronic Stability Control (ESC) on page 5-6*, and *Electronic Stability Control (ESC)/Traction Control System (TCS) Indicator/Warning Light on page 4-25* for more information.

Downloaded from www.Manualslib.com manuals search engine

CRUISE ENGAGED

This message displays when the cruise control system is active. See *Cruise Control on page 4-7* for more information.

DOOR AJAR

This message displays if one or more of the vehicle's doors are not closed properly. Make sure that the door(s) are closed completely.

ENGINE DISABLED

This message displays if the starting of the engine is disabled. Have your vehicle serviced by your dealer/retailer immediately.

ESC (Electronic Stability Control) ACTIVE

If your vehicle has Electronic Stability Control (ESC), this message displays and the ESC/TCS light on the instrument panel cluster flashes when ESC is assisting you with directional control of the vehicle. You may feel or hear the system working and see this message displayed in the DIC. Slippery road conditions may exist when this message is displayed, so adjust your driving accordingly. This message may stay on for a few seconds after ESC stops assisting you with directional control of the vehicle. This is normal when the system is operating. See *Electronic Stability Control (ESC) on page 5-6* and *Electronic Stability Control (ESC)/Traction Control System (TCS) Indicator/Warning Light on page 4-25* for more information.

ESC (Electronic Stability Control) NOT READY

If your vehicle has Electronic Stability Control (ESC), this message may display briefly after starting the vehicle if the system's sensors are not yet calibrated. The system is not functional until the message stops displaying. Adjust your driving accordingly. When the message is no longer displayed, the system is functional. See *Electronic Stability Control (ESC) on page 5-6* for more information.

ESC (Electronic Stability Control) OFF

If your vehicle has Electronic Stability Control (ESC), this message displays and the ESC/TCS light on the instrument panel cluster comes on solid when ESC is turned off. Adjust your driving accordingly. See *Electronic Stability Control (ESC) on page 5-6* and *Electronic Stability Control (ESC)/Traction Control System (TCS) Indicator/Warning Light on page 4-25* for more information.

Downloaded from www.Manualslib.com manuals search engine

KEY FOB BATT (Battery) LOW

This message displays if the Remote Keyless Entry (RKE) transmitter battery is low. Replace the battery in the transmitter. See “Battery Replacement” under *Remote Keyless Entry (RKE) System Operation on page 3-4*.

LEARN COMPLETE

On vehicles without the Remote Keyless Entry (RKE) system, this message displays when the Tire Pressure Monitor System (TPMS) has completed the tire learning process. See *Tire Pressure Monitor System on page 6-55* for more information.

LOW TRACTION

If your vehicle has the Traction Control System (TCS), this message displays and the ESC/TCS light on the instrument panel cluster flashes when the system is actively limiting wheel spin. Slippery road conditions may exist if this message is displayed, so adjust your driving accordingly. This message stays on for a few seconds after the system stops limiting wheel spin. See *Traction Control System (TCS) on page 5-9* and *Electronic Stability Control (ESC)/Traction Control System (TCS) Indicator/Warning Light on page 4-25* for more information.

PARKING BRAKE

This message displays if the parking brake is left engaged. See *Parking Brake on page 3-25* for more information.

SERVICE AIR BAG

This message displays when there is a problem with the airbag system. Have your vehicle serviced by your dealer/retailer immediately.

SERVICE ESC (ELECTRONIC STABILITY CONTROL)

If your vehicle has Electronic Stability Control (ESC), this message displays and a chime sounds if there has been a problem detected with ESC. The ESC/TCS light also appears on the instrument panel cluster. This light stays on solid as long as the detected problem remains present. When this message displays, the system is not working. Adjust your driving accordingly. See *Electronic Stability Control (ESC) on page 5-6* and *Electronic Stability Control (ESC)/Traction Control System (TCS) Indicator/Warning Light on page 4-25* for more information.

If this message turns on while you are driving, pull off the road as soon as possible and stop carefully. Try resetting the system by turning the ignition off and then back on. If this message still stays on or turns back on again while you are driving, your vehicle needs service. Have the ESC inspected by your dealer/retailer as soon as possible.

Downloaded from www.Manualslib.com manuals search engine

SERVICE TRACTION

If your vehicle has the Traction Control System (TCS), this message displays and a chime sounds when the system is not functioning properly. The ESC/TCS light also appears on the instrument panel cluster. This light stays on solid as long as the detected problem remains present. When this message displays, the system is not working. Adjust your driving accordingly. See *Traction Control System (TCS) on page 5-9* and *Electronic Stability Control (ESC)/Traction Control System (TCS) Indicator/Warning Light on page 4-25* for more information. Have the TCS serviced by your dealer/retailer as soon as possible.

SVC (Service) TIRE MONITOR

On vehicles with the Tire Pressure Monitor System (TPMS), this message displays if a part on the TPMS is not working properly. The tire pressure light also flashes and then remains on during the same ignition cycle. See *Tire Pressure Light on page 4-27*. Several conditions may cause this message to appear. See *Tire Pressure Monitor Operation on page 6-56* for more information. If the warning comes on and stays on, there may be a problem with the TPMS. See your dealer/retailer.

TIRE LEARN ON

On vehicles without the Remote Keyless Entry (RKE) system and with the Tire Pressure Monitor System (TPMS), this message displays when the TPMS is re-learning the tire positions on your vehicle. The tire positions must be re-learned after rotating the tires or after replacing a tire or sensor. See *Tire Inspection and Rotation on page 6-61*, *Tire Pressure Monitor System on page 6-55*, and *Inflation - Tire Pressure on page 6-54* for more information.

TIRE LOW ADD AIR

On vehicles with the Tire Pressure Monitor System (TPMS), this message displays when the pressure in one or more of the vehicle's tires is low. The low tire pressure warning light will also come on. See *Tire Pressure Light on page 4-27*. If a tire pressure message appears on the DIC, stop as soon as you can. Have the tire pressures checked and set to those shown on the Tire Loading Information label. See *Tires on page 6-47*, *Loading the Vehicle on page 5-22*, and *Inflation - Tire Pressure on page 6-54*. The DIC also shows the tire pressure values. See *DIC Operation and Displays on page 4-33*.

Downloaded from www.Manualslib.com manuals search engine

TRACTION OFF

If your vehicle has the Traction Control System (TCS), this message displays and the ESC/TCS light on the instrument panel cluster comes on solid when the TCS is turned off. Adjust your driving accordingly. See *Traction Control System (TCS) on page 5-9* and *Electronic Stability Control (ESC)/Traction Control System (TCS) Indicator/Warning Light on page 4-25* for more information.

TRUNK AJAR

This message displays when the trunk is not closed completely. Make sure that the trunk is closed completely. See *Trunk on page 3-10* and *Trunk Ajar Light on page 4-31*.

DIC Vehicle Personalization

Your vehicle has personalization capabilities that allow you to program certain features to a preferred setting. All of the features listed may not be available on your vehicle. Only the features available will be displayed on the DIC.

The default settings for the features were set when your vehicle left the factory, but may have been changed from their default state since that time.

To change feature settings, use the following procedure:

Entering Personalization Menu

1. Turn the ignition on while the vehicle is stopped.

   To avoid excessive drain on the battery, it is recommended that the headlamps are turned off.

2. Press and hold the information and reset buttons at the same time for one second, then release to enter the personalization menu.

   If the vehicle speed is greater than 2 mph (3 km/h), only the UNITS menu will be accessible.

3. Press the information button to scroll through the available personalization menu modes.

   Press the reset button to scroll through the available settings for each mode.

   If you do not make a selection within ten seconds, the display will go back to the previous information displayed.

Downloaded from www.Manualslib.com manuals search engine

Personalization Menu Modes

OIL LIFE RESET

When this feature is displayed, you can reset the engine oil life system. To reset the system, see *Engine Oil Life System on page 6-19*. See “OIL LIFE” under *DIC Operation and Displays on page 4-33* for more information.

UNITS

This feature allows you to select the units of measurement in which the DIC will display the vehicle information. When UNITS appears on the display, press and hold the reset button for at least one second to scroll through the available settings:

ENGLISH (default in United States): All information will be displayed in English units.

METRIC (default in Canada): All information will be displayed in metric units.

To select a setting and move on to the next feature, press the information button while the desired setting is displayed on the DIC.

TIRE LEARN?

This mode is available on vehicles without the Remote Keyless Entry (RKE) system and with the Tire Pressure Monitor System (TPMS). After rotating the tires or after replacing a tire or sensor, the TPMS must re-learn the tire positions. To re-learn the tire positions, see *Tire Pressure Monitor System on page 6-55*. See *Tire Inspection and Rotation on page 6-61* and *DIC Warnings and Messages on page 4-36* for more information.

LOCK HORN

If your vehicle has Remote Keyless Entry (RKE), this feature, which allows the vehicle’s horn to chirp every time the lock button on the RKE transmitter is pressed, can be enabled or disabled. When LOCK HORN appears on the display, press and hold the reset button for at least one second to scroll through the available settings:

OFF (default): The horn will not chirp on the first press of the lock button on the RKE transmitter. The horn will still chirp on the second press.

ON: The horn will chirp on the first press of the lock button on the RKE transmitter.

See *Remote Keyless Entry (RKE) System Operation on page 3-4* for more information.

To select a setting and move on to the next feature, press the information button while the desired setting is displayed on the DIC.

Downloaded from www.Manualslib.com manuals search engine

UNLOCK HORN

If your vehicle has Remote Keyless Entry (RKE), this feature, which allows the vehicle's horn to chirp on the first press of the unlock button on the RKE transmitter, can be enabled or disabled. When UNLOCK HORN appears on the display, press and hold the reset button for at least one second to scroll through the available settings:

OFF (default): The horn will not chirp when the unlock button on the RKE transmitter is pressed.

ON: The horn will chirp on the first press of the unlock button on the RKE transmitter.

See *Remote Keyless Entry (RKE) System Operation on page 3-4* for more information.

To select a setting and move on to the next feature, press the information button while the desired setting is displayed on the DIC.

LIGHT FLASH

If your vehicle has Remote Keyless Entry (RKE), this feature, which allows the vehicle's exterior hazard/turn signal lighting to flash every time the lock, unlock, or trunk release buttons on the RKE transmitter are pressed, can be enabled or disabled. When LIGHT FLASH appears on the display, press and hold the reset button for at least one second to scroll through the available settings:

OFF: The exterior hazard/turn signal lighting will not flash when the lock, unlock, or trunk release buttons on the RKE transmitter are pressed.

ON (default): The exterior hazard/turn signal lighting will flash when the lock, unlock, or trunk release buttons on the RKE transmitter are pressed.

See *Remote Keyless Entry (RKE) System Operation on page 3-4* for more information.

To select a setting and move on to the next feature, press the information button while the desired setting is displayed on the DIC.

Downloaded from www.Manualslib.com manuals search engine

AUTO UNLK (Unlock)

This feature, which allows the vehicle to automatically unlock certain doors, can be enabled or disabled. When AUTO UNLK appears on the display, press and hold the reset button for at least one second to scroll through the available settings:

ALL (default): All of the doors will automatically unlock.

DRIVER: The driver's door will automatically unlock.

NONE: None of the doors will automatically unlock. You will need to manually unlock the doors.

If you have a manual transmission vehicle, the door(s) will automatically unlock when the key is turned off.

If you have an automatic transmission vehicle, you can select when the automatic unlocking will occur. See "UNLK (Unlock) (Automatic Transmission Only)" following.

See *Automatic Door Unlock on page 3-9* for more information.

To select a setting and move on to the next feature, press the information button while the desired setting is displayed on the DIC.

UNLK (Unlock) (Automatic Transmission Only)

This screen displays only if your vehicle has an automatic transmission and DRIVER or ALL is selected for the AUTO UNLK feature. This feature determines when the automatic door unlocking will occur. When UNLK appears on the display, press and hold the reset button for at least one second to scroll through the available settings:

KEY OFF: The door(s) will unlock when the key is turned off.

SHIFT TO P (Park) (default): The door(s) will unlock when the vehicle is shifted into P (Park).

See *Automatic Door Unlock on page 3-9* for more information.

To select a setting and move on to the next feature, press the information button while the desired setting is displayed on the DIC.

Downloaded from www.Manualslib.com manuals search engine

EXT (Exterior) LIGHTS

If your vehicle has Remote Keyless Entry (RKE), this feature, which allows the vehicle's exterior perimeter lighting to turn on each time the unlock button on the RKE transmitter is pressed, can be enabled or disabled. When EXT LIGHTS appears on the display, press and hold the reset button for at least one second to scroll through the available settings:

OFF: The exterior perimeter lighting will not turn on when the unlock button on the RKE transmitter is pressed.

ON (default): The exterior perimeter lighting will turn on when the unlock button on the RKE transmitter is pressed.

See *Remote Keyless Entry (RKE) System Operation on page 3-4* for more information.

To select a setting and move on to the next feature, press the information button while the desired setting is displayed on the DIC.

LANGUAGE

This feature allows you to select the language in which the DIC will display. When LANGUAGE appears on the display, press and hold the reset button for at least one second to scroll through the available settings:

ENGLISH (default): All messages will appear in English.

FRENCH: All messages will appear in French.

SPANISH: All messages will appear in Spanish.

GERMAN: All messages will appear in German.

To select a setting and exit out of the personalization menu mode, press the information button while the desired setting is displayed on the DIC.

Exiting Personalization Menu

The personalization menu will be exited when any of the following conditions occur:

- A ten second time period has elapsed.
- The ignition is turned off.
- The end of the personalization menu list is reached.

Downloaded from www.Manualslib.com manuals search engine

Audio System(s)

Determine which radio the vehicle has and read the following pages to become familiar with its features.

⚠ WARNING:

Taking your eyes off the road for extended periods could cause a crash resulting in injury or death to you or others. Do not give extended attention to entertainment tasks while driving.

This system provides access to many audio and non audio listings.

To minimize taking your eyes off the road while driving, do the following while the vehicle is parked:

- Become familiar with the operation and controls of the audio system.
- Set up the tone, speaker adjustments, and preset radio stations.

For more information, see *Defensive Driving on page 5-2*.

Notice: **Contact your dealer/retailer before adding any equipment.**

Adding audio or communication equipment could interfere with the operation of the vehicle's engine, radio, or other systems, and could damage them. Follow federal rules covering mobile radio and telephone equipment.

Notice: **The chime signals related to safety belts, parking brake, and other functions of your vehicle operate through the radio/entertainment system. If that equipment is replaced or additional equipment is added to your vehicle, the chimes may not work. Make sure that replacement or additional equipment is compatible with your vehicle before installing it. See *Accessories and Modifications on page 6-3*.**

The vehicle has Retained Accessory Power (RAP). With RAP, the audio system can be played even after the ignition is turned off. See *Retained Accessory Power (RAP) on page 3-19* for more information.

Downloaded from www.Manualslib.com manuals search engine

Setting the Clock

Without Date Display

AM/FM Base Radio with a Single CD Player

To set the time:

1. Turn the ignition key to ACC/ACCESSORY or ON/RUN. Press ⏻ to turn the radio on.
2. Press ◷ until the hour begins flashing on the display. Press ◷ a second time and the minute begins flashing on the display.
3. While either the hour or the minute numbers are flashing, turn ♫ to increase or decrease the time.
4. Press ◷ again until the clock display stops flashing to set the currently displayed time; otherwise, the flashing stops after five seconds and the current time displayed is automatically set.

To change the time default setting from 12 hour to 24 hour, press the ◷ button until 12H or 24H is displayed. Once 12H or 24H is displayed, turn the ♫ knob to the desired option to select the setting. Press the ◷ button again to apply the setting, or let the screen time out.

With Date Display

Radio with CD (MP3) and USB Port, and Radio with Single CD (MP3) Player

To set the time and date:

1. Turn the ignition key to ACC/ACCESSORY or ON/RUN. Press ⏻ to turn the radio on.
2. Press ◷ and the HR, MIN, MM, DD, YYYY (hour, minute, month, day, and year) displays.
3. Press the softkey located below any one of the tabs that you want to change.
4. To increase the time or date do one of the following:
   - Press the softkey located below the selected tab.
   - Press ⏭ SEEK, or ▷▷ FWD.
   - Turn ♫ clockwise.
5. To decrease the time or date do one of the following:
   - Press ⏮ SEEK or ◁◁ REV.
   - Turn ♫ counterclockwise.

The date does not automatically display. To see the date press ◷ while the radio is on. The date with display times out after a few seconds and goes back to the normal radio and time display.

Downloaded from www.Manualslib.com manuals search engine

To change the time default setting from 12 hour to 24 hour or to change the date default setting from month/day/year to day/month/year:

1. Press ◷ and then the softkey located below the forward arrow label. Once the time 12H and 24H, and the date MM/DD/YYYY (month, day, and year) and DD/MM/YYYY (day, month, and year) displays.
2. Press the softkey located below the desired option.
3. Press ◷ again to apply the selected default, or let the screen time out.

Six-Disc CD (MP3) Player

To set the time and date:

1. Turn the ignition key to ACC/ACCESSORY or ON/RUN. Press ⏻ to turn the radio on.
2. Press MENU.
3. Press the softkey below the ◷ tab. The HR, MIN, MM, DD, YYYY displays.
4. Press the softkey below any one of the tabs you want to change.
5. To increase the time or date do one of the following:
   - Press the softkey located below the selected tab.
   - Press ⊳I SEEK, or ▷▷ FWD.
   - Turn ♫ clockwise.
6. To decrease the time or date do one of the following:
   - Press I⊲ SEEK or ◁◁ REV.
   - Turn ♫ counterclockwise.

The date does not automatically display. To see the date press MENU and then softkey below the ◷ tab while the radio is on. The date with display times out after a few seconds and goes back to the normal radio and time display.

To change the time default setting from 12 hour to 24 hour or to change the date default setting from month/day/year to day/month/year:

1. Press MENU, and then the softkey below the ◷ tab. The HR, MIN, MM, DD, YYYY displays.
2. Press the softkey below the forward arrow tab. The time 12H and 24H, and the date MM/DD/YYYY (month, day, and year) and DD/MM/YYYY (day, month, and year) displays.
3. Press the softkey located below the desired option.
4. Press MENU again to apply the selected default, or let the screen time out.

Downloaded from www.Manualslib.com manuals search engine

Radio(s)

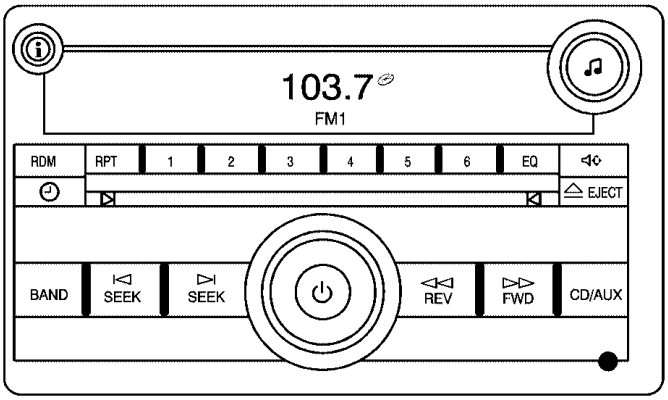

Radio with CD (Base)

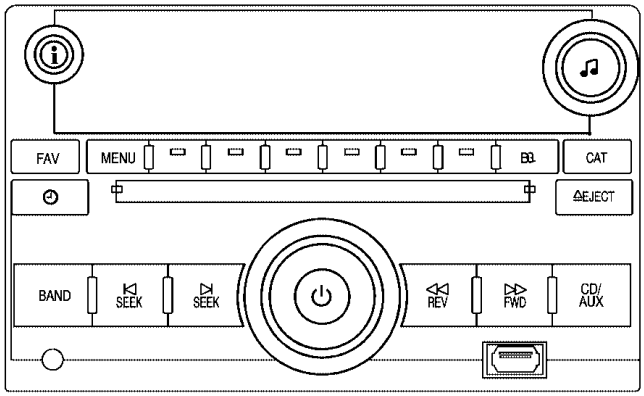

Radio with CD (MP3) and USB Port shown,
Radio with CD (MP3) similar,
Radio with Six-Disc CD (MP3) similar

The vehicle has one of these radios as its audio system.

Downloaded from www.Manualslib.com manuals search engine

Radio Data System (RDS)

The radio may have RDS. The RDS feature is available for use only on FM stations that broadcast RDS information. This system relies upon receiving specific information from these stations and only works when the information is available. While the radio is tuned to an FM-RDS station, the station name or call letters display. In rare cases, a radio station could broadcast incorrect information that causes the radio features to work improperly. If this happens, contact the radio station.

Playing the Radio

⏻ **(Power/Volume):** Press to turn the system on and off. Turn to increase or decrease the volume.

Speed Compensated Volume (SCV): Radios with the Speed Compensated Volume (SCV) feature automatically adjust the radio volume to compensate for road and wind noise as the vehicle speeds up or slows down, so that the volume level is consistent.

To activate SCV:

1. Set the radio volume to the desired level.
2. Press MENU to display the radio setup menu.
3. Press the softkey under the AUTO VOLUM tab on the radio display.
4. Press the softkey under the desired Speed Compensated Volume setting (OFF, Low, Med, or High) to select the level of radio volume compensation. The display times out after approximately 10 seconds. Each higher setting allows for more radio volume compensation at faster vehicle speeds.

Downloaded from www.Manualslib.com manuals search engine

Finding a Station

BAND: Press to choose between FM1, FM2, AM, or XM™, if equipped, on the Radio with CD (Base). Press to choose between FM, AM, XM, if equipped, on the Radio with CD (MP3) and USB Port, Radio with CD (MP3), or Radio with Six-Disc CD (MP3).

♫ **(Tune):** Turn to select radio stations.

⏮ **SEEK:** Press to seek or scan stations with a strong signal in the selected band.

- To seek stations, press and release ⏮ SEEK to go to the previous station and stay there.
- To scan stations, press and hold ⏮ SEEK for a few seconds until the radio beeps once. The radio goes to a station, plays for a few seconds, then goes to the next station. Press ⏮ SEEK again to stop scanning.
- To scan preset stations in the selected band, press and hold ⏮ SEEK for four seconds until a double beep sounds. The radio goes to a stored preset, plays for a few seconds, then goes to the next stored preset. Press ⏮ SEEK again to stop scanning preset stations.

⏭ **SEEK:** Press to seek or scan stations with a strong signal in the selected band.

- To seek stations, press and release ⏭ SEEK to go to the next station and stay there.
- To scan stations, press and hold ⏭ SEEK for a few seconds until the radio beeps once. The radio goes to a station, plays for a few seconds, then goes to the next station. Press ⏭ SEEK again to stop scanning.
- To scan preset stations in the selected band, press and hold ⏭ SEEK for four seconds until a double beep sounds. The radio goes to a stored preset, plays for a few seconds, then goes to the next stored preset. Press ⏭ SEEK again to stop scanning preset stations.

Downloaded from www.Manualslib.com manuals search engine

i (Information): For vehicles with the Radio with CD (Base), press to switch the display between the radio station frequency and the time. While the ignition is off, press i to display the time.

For vehicles with XM, MP3, WMA, or RDS features, press i to display additional text information related to the current FM-RDS or XM station; or CD, MP3, WMA song. Song title information will be displayed on the top line of the display while the artist information will be displayed on the bottom line, it the information is available during XM, CD, MP3, or WMA playback. When information is not available, “No Info” displays.

Storing Radio Stations

Depending on which radio the vehicle has, radio stations are stored as either favorites or presets.

Storing a Radio Station as a Favorite

Radio that have a FAV button store radio stations as favorites.

Drivers are encouraged to set up radio station favorites while the vehicle is in P (Park). Tune to favorite stations using the softkeys, favorites button, and steering wheel controls. See *Defensive Driving on page 5-2*.

FAV (Favorites): A maximum of 36 stations can be stored as favorites using the six softkeys located below the radio station frequency tabs and by using the radio favorites page button (FAV button). Press FAV to go through up to six pages of favorites, each having six favorite stations available per page. Each page of favorites can contain any combination of AM, FM, or XM stations. The current balance/fade and tone settings are also stored with the favorite stations.

To store a station as a favorite:

1. Tune to the desired radio station and set the balance/fade and tone settings to the desired levels.
2. Press FAV to display the page where to store the station.
3. Press and hold one of the six softkeys until a beep sounds.
4. Repeat the steps for each radio station to be stored as a favorite.

Downloaded from www.Manualslib.com manuals search engine

To setup the number of favorites pages:

1. Press MENU to display the radio setup menu.
2. Press the softkey located below the FAV 1-6 tab.
3. Select the desired number of favorites pages by pressing the softkey located below the displayed page numbers.
4. Press FAV, or let the menu time out, to return to the original main radio screen showing the radio station frequency tabs and to begin programming favorites.

Auto Text (Satellite Radio Service, CD, MP3, and WMA features): If additional information is available for the current song being played, Auto Text will automatically page/scroll the information every three seconds above the FAV presets on the radio display. By default, Auto Text is enabled.

To change the Auto Text setting:

1. Press MENU to display the radio setup menu.
2. Press the softkey under AUTO TXT tab on the radio display.
3. Press the softkey under the ON or OFF tab on the radio display.

If **i** is pressed and the song title or artist information is longer than what can be displayed, the extra information will page every three seconds when Auto Text is activated.

Storing a Radio Station as a Preset

Radios that have numbered pushbuttons store radio stations as presets.

If the radio does not have XM, up to 18 stations (six FM1, six FM2, and six AM), can be programmed on the six numbered buttons.

To store preset stations:

1. Tune in the desired station.
2. Press and hold one of the six numbered buttons for three seconds until a beep sounds.
3. Repeat the Steps 1 and 2 for each numbered button.

Downloaded from www.Manualslib.com manuals search engine

Setting the Tone (Bass/Midrange/Treble)

BASS/MID/TREB (Bass, Midrange, or Treble): The radio may display some or all tones such as BASS, MID, and TREB.

To adjust the tone settings on the Radio with CD (Base):

Press ♫ until the tone control tabs display, then turn ♫ to change the setting.

To adjust the tone settings on the Radio with CD (MP3) and USB Port, Radio with CD (MP3), or Radio with Six-Disc CD (MP3):

1. Press ♫ until the tone control tabs display.
2. Press the softkey below the desired tab to be adjusted.
3. To increase the level of the bass, midrange, or treble:
   - Press ⊳I SEEK, or ▷▷ FWD.
   - Turn ♫ clockwise.
4. To decrease the level of the bass, midrange, or treble:
   - Press I⊲ SEEK, or ◁◁ REV.
   - Turn ♫ counterclockwise.

The radio may be capable of adjusting bass, midrange, or treble to the middle position by pressing the softkey below the BASS, MID, or TREB tab for more than two seconds. The radio beeps once and the level adjusts to the middle position.

The radio may also be capable of adjusting all tone and speaker controls to the middle position by pressing ♫ for more than two seconds until the radio beeps once.

If a station's frequency is weak, or has static, decrease the treble.

EQ (Equalization): Press this button to select preset equalization settings.

To return to the manual mode, press EQ until Manual displays or start to manually adjust the bass, midrange, or treble by pressing ♫ .

Downloaded from www.Manualslib.com manuals search engine

Adjusting the Speakers (Balance/Fade)

Depending on which radio the vehicle has, the Balance/Fade can be adjusted using ♫ or ◁✥ .

To adjust balance or fade using ♫ :

1. Press ♫ until the speaker control tabs display.
2. Press the softkey under the desired tab, or continue pressing ♫ to highlight the desired tab.
3. Turn ♫ to adjust the highlighted setting. The highlighted setting can also be adjusted by pressing either SEEK arrow.

   On some radios, ▷▷ FWD and ◁◁ REV can also be used to adjust the highlighted level.

To adjust balance or fade using ◁✥ :

1. Press ◁✥ until the speaker control tabs display.
2. Continue pressing ◁✥ until the desired speaker control tab displays.
3. Turn ♫ to adjust the setting. The setting can also be adjusted by pressing either SEEK arrow, ▷▷ FWD, or ◁◁ REV.

The radio may be capable of adjusting balance or fade to the middle position by pressing the softkey below the BAL or FADE tab for more than two seconds. The radio beeps once and the level adjusts to the middle position.

The radio may also be capable of adjusting all tone and speaker controls to the middle position by pressing ♫ for more than two seconds until the radio beeps once.

Finding a Category (CAT) Station (XM Satellite Radio Service Only)

CAT (Category): The radio may have the CAT button feature.

To select and find a desired category:

1. Press BAND until the XM frequency displays.
2. Press CAT to display the category tabs on the radio display. Continue pressing the CAT button until the desired category name displays.
3. Press either of the two softkeys below the desired category tab to immediately tune to the first XM station associated with that category.

Downloaded from www.Manualslib.com manuals search engine

4. To go to the previous or to the next XM station within the selected category, do one of the following:
   - Turn ♫ .
   - Press the softkeys below the right or left arrows on the radio display.
   - Press ⊲ SEEK or ⊳ SEEK.
5. To exit the category search mode, press the FAV button or BAND button to display the favorites again.

Undesired XM categories can be removed through the setup menu. To remove an undesired category:

1. Press MENU to display the radio setup menu.
2. Press the softkey below the XM CAT tab.
3. Turn ♫ to display the category to be removed.
4. Press the softkey below the Remove tab until the category name along with the word Removed displays.
5. Repeat the steps to remove additional categories.

Removed categories can be restored by pressing the softkey under the Add tab when a removed category displays or by pressing the softkey below the Restore All tab.

Categories cannot be removed or added while the vehicle is moving faster than 5 mph (8 km/h).

Radio Messages

Calibration Error: Displays if the radio is no longer calibrated properly for the vehicle. The vehicle must be returned to your dealer/retailer for service.

Loc or Locked: Displays when the THEFTLOCK® system has activated. Take the vehicle to your dealer/retailer for service.

If any error occurs repeatedly or if an error cannot be corrected, contact your dealer/retailer.

XM Satellite Radio Service

XM is a satellite radio service that is based in the 48 contiguous United States and 10 Canadian provinces. XM Satellite Radio has a wide variety of programming and commercial-free music, coast-to-coast, and in digital-quality sound. A service fee is required to receive the XM service. For more information, contact XM at www.xmradio.com or call 1-800-929-2100 in the U.S. and www.xmradio.ca or call 1-877-438-9677 in Canada.

Radio Messages for XM Only

See *XM Radio Messages on page 4-67* for more information.

Downloaded from www.Manualslib.com manuals search engine

Loading a CD

Radio's with a Single CD Player

Insert a CD partway into the slot, label side up. The player pulls it in and the CD begins playing.

When the CD is inserted, the CD symbol displays. As each new track starts to play, the track number displays.

The CD player can play the smaller 8 cm (3 in) single CDs with an adapter ring. Full-size CDs and the smaller CDs are loaded in the same manner.

Radio's with a Six-Disc CD Player

LOAD ▽: Press to load CDs into the CD player. This CD player holds up to six CDs.

To insert one CD:

1. Press and release ▽ .
2. Wait for the message to insert the disc.
3. Load a CD. Insert the CD partway into the slot, label side up. The player pulls the CD in.

To insert multiple CDs:

1. Press and hold ▽ for two seconds. A beep sounds and Load All Discs displays.
2. Follow the displayed instruction on when to insert the discs.
3. Press ▽ again to cancel loading more CDs.

Ejecting a CD

Radio's with a Single CD Player

⏏ **EJECT:** Press to eject the CD. If the CD is not removed, after several seconds, the CD automatically pulls back into the player.

Radio's with a Six-Disc CD Player

⏏ **EJECT:** Press to eject a CD. If the CD is not removed, after several seconds, the CD automatically pulls back into the player.

To eject the CD that is currently playing:

1. Press and release ⏏ . The radio beeps once and Ejecting Disc displays
2. Once the disc is ejected and Remove Disc displays, remove the CD from the player.

To eject all CDs:

1. Press and hold ⏏ for two seconds. A beep sounds and Ejecting All Discs displays.
2. Once the disc is ejected and Remove Disc displays, remove the CD from the player.

Downloaded from www.Manualslib.com manuals search engine

Playing a CD

If the ignition or radio is turned off with a CD in the player it stays in the player. When the ignition or radio is turned on, the CD starts to play where it stopped, if it was the last selected audio source.

♫ **(Tune):** Turn to select tracks on the CD currently playing.

⏮ **SEEK:** Press to go to the start of the current track, if more than ten seconds have played. Press and hold or press multiple times to continue moving backward through the tracks on the CD.

⏭ **SEEK:** Press to go to the next track. Press and hold or press multiple times to continue moving forward through the tracks on the CD.

◁◁ **REV (Reverse):** Press and hold to reverse playback quickly within a track. Sound is heard at a reduced volume and the elapsed time of the track displays. Release to resume playing the track.

▷▷ **FWD (Fast Forward):** Press and hold to advance playback quickly within a track. Sound is heard at a reduced volume and the elapsed time of the track displays. Release to resume playing the track.

RDM (Random): Tracks can be listened to in random, rather than sequential order, on one CD or all CDs in a Six-Disc CD player.

To use random on the base radio with Single CD player:

1. Press the softkey below RDM tab until Random Current Disc displays.
2. Press the softkey again to turn off random play.

To use random on a radio with a Six-Disc CD player:

1. To play tracks from all CDs loaded in random order, press the softkey below the RDM tab until Randomize All Discs displays.
2. To play tracks from the CD currently playing in random order, press the softkey below the RDM tab until Random Current Disc displays.
3. To turn off random, press the same softkey again.

BAND: Press to listen to the radio while a CD is playing. The CD remains inside the radio for future listening.

CD/AUX (CD/Auxiliary): Press to play a CD while listening to the radio. The CD icon and a message showing the track number displays when a CD is in the player. Press this button again and the system automatically searches for an auxiliary input device, such as a portable audio player. If a portable audio player is not connected, No Aux Input Device Found may display.

Downloaded from www.Manualslib.com manuals search engine

Playing an MP3 CD-R or CD-RW Disc

The radio may have the ability to play an MP3 CD-R or CD-RW disc. See *Using an MP3 on page 4-60* for more information.

CD Messages

CHECK DISC: If an error message displays and/or the CD comes out, it could be for one of the following reasons:

- The CD player is very hot. When the temperature returns to normal, the CD should play.
- The road is very rough. When the road becomes smoother, the CD should play.
- The CD is dirty, scratched, wet, or upside down.
- The air is very humid. If so, wait about an hour and try again.
- A problem may have occurred while burning the CD.
- The label could be caught in the CD player.

If the CD is not playing correctly, for any other reason, try a known good CD.

If any error occurs repeatedly or if an error cannot be corrected, contact your dealer/retailer. If the radio displays an error message, write it down and provide it to your dealer/retailer when reporting the problem.

Care of CDs

Store CD(s) in their original cases or other protective cases and away from direct sunlight and dust. The CD player scans the bottom of the disc. If the bottom of a CD is damaged it may not play properly or at all. Do not touch the bottom of a CD while handling it. Pick up CDs by grasping the outer edges or the edge of the hole and the outer edge.

If the surface of a CD is dirty, take a soft, lint free cloth or dampen a clean, soft cloth in a mild, neutral detergent solution mixed with water, and clean it. Make sure the wiping process starts from the center to the edge.

Downloaded from www.Manualslib.com manuals search engine

Care of the CD Player

Do not add labels to a CD, it could get caught in the CD player. Use a marking pen to write on the top of the CD if a description is needed.

Do not use CD lens cleaners, they could damage the CD player.

Notice: **If a label is added to a CD, or more than one CD is inserted into the slot at a time, or an attempt is made to play scratched or damaged CDs, the CD player could be damaged. While using the CD player, use only CDs in good condition without any label, load one CD at a time, and keep the CD player and the loading slot free of foreign materials, liquids, and debris.**

If an error displays, see “CD Messages” earlier in this section.

Using the Auxiliary Input Jack

The radio system may have an auxiliary input jack located on the lower right side of the faceplate. This is not an audio output; do not plug the headphone set into the front auxiliary input jack. An external audio device such as an iPod®, laptop computer, MP3 player, CD changer, etc. can be connected to the auxiliary input jack for use as another audio source.

Drivers are encouraged to set up any auxiliary device while the vehicle is in P (Park). See *Defensive Driving on page 5-2* for more information on driver distraction.

To use a portable audio player, connect a 3.5 mm (1/8 in) cable to the radio’s front auxiliary input jack. When a device is connected, press the radio CD/AUX button to begin playing audio from the device over the vehicle speakers.

⏻ **(Power/Volume):** Turn to adjust the volume. Additional volume adjustments may have to be made from the portable device if the volume is too quiet or not loud.

BAND: Press to listen to the radio while a portable audio device is playing. The portable audio device continues playing until it is stopped or turned off.

CD/AUX (CD/Auxiliary): Press to play a CD while a portable audio device is connected to the auxiliary input. Press again and the system begins playing audio from the connected portable audio player. If a portable audio player is not connected, No Aux Input Device may display.

Downloaded from www.Manualslib.com manuals search engine

Using the USB Port

Radio's with a USB port can control a USB storage device or an iPod® using the radio buttons and knobs. See *Using an MP3 on page 4-60* for information about how to connect and control a USB storage device or an iPod.

USB Support

The USB connector is located on the front of the radio and uses the USB 2.0 standard.

USB Supported Devices

- USB Flash Drives
- Portable USB Hard Drives
- Fifth generation or later iPod
- iPod nanos
- iPod touch
- iPod classic

Not all iPods and USB Drives are compatible with the USB port.

Make sure the iPod has the latest firmware from Apple® for proper operation. iPod firmware can be updated using the latest iTunes® application. See www.apple.com/itunes.

For help with identifying your iPod, go to www.apple.com/support.

Using an MP3

Format

Radios that have the capability of playing MP3's can play .mp3 files that were recorded onto a CD-R or CD-RW disc. Radios that have a USB port can play .mp3 and .wma files that are stored on a USB storage device as well as AAC files that are stored on an iPod®.

Compressed Audio

The radio can play discs that contain both uncompressed CD audio and MP3 files.

Radios with a single CD player read all MP3 files first, then the uncompressed CD audio files.

Radios with a six-CD player only read MP3 files unless the CAT button is pressed to toggle to uncompressed audio files.

Downloaded from www.Manualslib.com manuals search engine

CD-R or CD-RW Supported File and Folder Structure

The radio supports:

- Up to 50 folders.
- Up to 8 folders in depth.
- Up to 50 playlists.
- Up to 255 files.
- Playlists with an .m3u or .wpl extension.
- Files with an .mp3 or .cda file extension.

USB Supported File and Folder Structure

The radio supports:

- Up to 700 folders.
- Up to 8 folders in depth.
- Up to 65,535 files.
- Folder and file names up to 64 bytes.
- Files with an .mp3 or .wma file extension.
- AAC files stored on an iPod.
- FAT16
- FAT32

Root Directory

The root directory is treated as a folder. Files are stored in the root directory when the disc or storage device does not contain folders. Files accessed from the root directory of a CD display as F1 ROOT.

Empty Folder

Folders that do not contain files are skipped, and the player advances to the next folder that contains files.

Order of Play

Tracks are played in the following order:

- Play begins from the first track in the first playlist and continues sequentially through all tracks in each playlist. When the last track of the last playlist has played, play continues from the first track of the first playlist.
- Play begins from the first track in the first folder and continues sequentially through all tracks in each folder. When the last track of the last folder has played, play continues from the first track of the first folder.

When play enters a new folder, the display does not automatically show the new folder name unless the folder mode has been chosen as the default display. The new track name displays.

Downloaded from www.Manualslib.com manuals search engine

File System and Naming

The song name that displays is the song name that is contained in the ID3 tag. If the song name is not present in the ID3 tag, then the radio displays the file name without the extension (such as .mp3) as the track name.

Track names longer than 32 characters or four pages are shortened. The display does not show parts of words on the last page of text and the extension of the filename is not displayed.

Preprogrammed Playlists

CDs that have preprogrammed playlists that were created using WinAmp™, MusicMatch™, or Real Jukebox™ software can be accessed, however, there is no playlist editing capability using the radio. These playlists are treated as special folders containing compressed audio song files.

Playlists that have an .m3u or .pls file extension and are stored on a USB device may be supported by the radio with a USB port.

Playing a CD-R or CD-RW MP3

♫ **(Tune):** Turn to select MP3 files on the CD currently playing.

⏮ **SEEK:** Press to go to the start of the track, if more than ten seconds have played. Press and hold or press multiple times to continue moving backward through tracks.

⏭ **SEEK:** Press to go to the next track. Press and hold or press multiple times to continue moving forward through tracks.

◁◁ **REV (Reverse):** Press and hold to reverse playback quickly. Sound is heard at a reduced volume and the elapsed time of the file displays. Release ◁◁ REV to resume playing.

▷▷ **FWD (Fast Forward):** Press and hold to advance playback quickly. Sound is heard at a reduced volume and the elapsed time of the file displays. Release ▷▷ FWD to resume playing. The elapsed time of the file displays.

Downloaded from www.Manualslib.com manuals search engine

(Previous Folder): Press the softkey below to go to the first track in the previous folder.

(Next Folder): Press the softkey below to go to the first track in the next folder.

RDM (Random): MP3 files can be listened to on a CD in random, rather than sequential order, on one CD or all discs in the Six-Disc CD player. To use random:

1. Press the softkey under the RDM tab until Random Current Disc displays to play songs from the current CD in random order. Press the same softkey again to turn off random play.
2. Press the softkey under the RDM tab until Randomize All Discs displays to play songs from all CDs loaded in the Six-Disc CD player in random order. Press the same softkey again to turn off random play.

(Music Navigator): Press the softkey below to have the files played in order by artist or album. The player scans the disc to sort the files by artist and album ID3 tag information. It can take several minutes to scan the disc depending on the number of files on the disc. The radio may begin playing while it is scanning in the background.

When the scan is finished, the disc begins playing files in order by artist. The current artist playing is shown on the second line of the display. Once all songs by that artist are played, the player moves to the next artist in alphabetical order and begins playing files by that artist.

To listen to files by another artist, press the softkey located below either arrow tab. The disc goes to the next or previous artist in alphabetical order. Continue pressing either softkey below the arrow tab until the desired artist displays.

To change from playback by artist to playback by album:

1. Press the softkey located below the Sort By tab.
2. Press one of the softkeys below the album tab from the sort screen.
3. Press the softkey below the back tab to return to the main music navigator screen.

The album name displays on the second line between the arrows and songs from the current album begins to play. Once all songs from that album have played, the player moves to the next album in alphabetical order on the CD and begins playing MP3 files from that album.

To exit music navigator mode, press the softkey below the Back tab to return to normal MP3 playback.

Downloaded from www.Manualslib.com manuals search engine

Connecting a USB Storage Device or iPod®

The USB Port can be used to control an iPod or a USB storage device.

To connect a USB storage device, connect the device to the USB port located on the front of the radio.

To connect an iPod, connect one end of the USB cable that came with the iPod to the iPod's dock connector and connect the other end to the USB port located on the front of the radio. If the vehicle is on and the USB connection works, "OK to disconnect" and a GM logo may appear on the iPod and iPod appears on the radio's display. The iPod music appears on the radio's display and begins playing.

The iPod charges while it is connected to the vehicle if the vehicle is in the ACC/ACCESSORY or ON/RUN position. When the vehicle is turned off, the iPod automatically powers off and will not charge or draw power from the vehicle's battery.

If you have an older iPod model that is not supported, it can still be used by connecting it to the Auxiliary Input Jack using a standard 3.5 mm (1/8 inch) stereo cable. See "Using the Auxiliary Input Jack" earlier for more information.

Using the Radio to Control a USB Storage Device or iPod

The radio can control a USB storage device or an iPod using the radio buttons and knobs and display song information on the radio's display.

♫ **(Tune):** Turn to select files.

⏮ **SEEK:** Press to go to the start of the track, if more than ten seconds have played. Press and hold or press multiple times to continue moving backward through tracks.

⏭ **SEEK:** Press to go to the next track. Press and hold or press multiple times to continue moving forward through tracks.

◁◁ **REV (Reverse):** Press and hold to reverse playback quickly. Sound is heard at a reduced volume. Release ◁◁ REV to resume playing. The elapsed time of the file displays.

▷▷ **FWD (Fast Forward):** Press and hold to advance playback quickly. Sound is heard at a reduced volume. Release ▷▷ FWD to resume playing. The elapsed time of the file displays.

i (Information): Press to display additional information about the selected track.

Downloaded from www.Manualslib.com manuals search engine

Using Softkeys to Control a USB Storage Device or iPod

The five softkeys below the radio display are used to control the functions listed below.

To use the softkeys:

1. Press the first or fifth softkey below the radio display to display the functions listed below, or press the softkey below the function if it is currently displayed.
2. Press the softkey below the tab with the function on it to use that function.

(Pause): Press the softkey below to pause the track. The tab appears raised when pause is being used. Press the softkey below again to resume playback.

Back: Press the softkey below the back tab to go back to the main display screen on an iPod, or the root directory on a USB storage device.

(Folder View): Press the softkey below to view the contents of the current folder on the USB drive. To browse and select files:

1. Press the softkey below .
2. Turn to scroll through the list of folders.
3. Press to select the desired folder. If there is more then one folder, repeat Steps 1 and 2 until the desired folder is reached.
4. Turn to scroll through the files in the selected folder.
5. Press to select the desired file to be played.

To skip through large lists, the five softkeys can be used to navigate in the following order:

- First softkey, first item in the list.
- Second softkey, 1% through the list each time the softkey is pressed.
- Third softkey, 5% through the list each time the softkey is pressed.
- Fourth softkey, 10% through the list each time the softkey is pressed.
- Fifth softkey, end of the list.

Downloaded from www.Manualslib.com manuals search engine

(Music Navigator): Press the softkey below to view and select a file on an iPod, using the iPod's menu system. Files are sorted by:

- Playlists
- Artists
- Albums
- Genres
- Songs
- Composers

To select files:

1. Press the softkey below .
2. Turn to scroll through the list of menus.
3. Press to select the desired menu.
4. Turn to scroll through the folders or files in the selected menu.
5. Press to select the desired file to be played.

To skip through large lists, the five softkeys can be used to navigate in the following order:

- First softkey, first item in the list.
- Second softkey, 1% through the list each time the softkey is pressed.
- Third softkey, 5% through the list each time the softkey is pressed.
- Fourth softkey, 10% through the list each time the softkey is pressed.
- Fifth softkey, end of the list.

Repeat Functionality

To use Repeat:

Press the softkey below or 1 to select between Repeat All and Repeat Track.

(Repeat All): Press the softkey below to repeat all tracks. The tab appears lowered when Repeat All is being used. This is the default mode when a USB storage device or iPod is first connected.

1 **(Repeat Track):** Press the softkey below 1 to repeat one track. The tab appears raised when Repeat Track is being used.

Downloaded from www.Manualslib.com manuals search engine

Shuffle Functionality

To use Shuffle:

Press the softkey below ⇉ , ⤮S , ⤮A or ⤮F to select between Shuffle Off, Shuffle All Songs/Shuffle Songs, Shuffle Album, or Shuffle Folder.

⇉ **(Shuffle Off):** Press the softkey below ⤮S to turn shuffle off. This is the default mode when a USB storage device or iPod is first connected.

⤮S **(Shuffle All Songs / Shuffle Songs):** Press the softkey below ⤮F or ⤮A to shuffle all songs on the USB storage device or iPod.

⤮A **(Shuffle Album):** Press the softkey below ⇉ to shuffle all songs in the current album on an iPod.

⤮F **(Shuffle Folder):** Press the softkey below ⇉ to shuffle all songs in the current folder on a USB storage device.

XM Radio Messages

XL (Explicit Language Channels): These channels, or any others, can be blocked at a customer's request, by calling 1-800-852-XMXM (9696).

XM Updating: The encryption code in the receiver is being updated, and no action is required. This process should take no longer than 30 seconds.

No XM Signal: The system is functioning correctly, but the vehicle is in a location that is blocking the XM™ signal. When the vehicle is moved into an open area, the signal should return.

Loading XM: The audio system is acquiring and processing audio and text data. No action is needed. This message should disappear shortly.

Channel Off Air: This channel is not currently in service. Tune in to another channel.

Channel Unauth: This channel is blocked or cannot be received with your XM Subscription package.

Downloaded from www.Manualslib.com manuals search engine

Channel Unavail: This previously assigned channel is no longer assigned. Tune to another station. If this station was one of the presets, choose another station for that preset button.

No Artist Info: No artist information is available at this time on this channel. The system is working properly.

No Title Info: No song title information is available at this time on this channel. The system is working properly.

No CAT Info: No category information is available at this time on this channel. The system is working properly.

No Information: No text or informational messages are available at this time on this channel. The system is working properly.

CAT Not Found: There are no channels available for the selected category. The system is working properly.

XM Theftlocked: The XM receiver in the vehicle could have previously been in another vehicle.
For security purposes, XM receivers cannot be swapped between vehicles. If this message is received after having the vehicle serviced, check with your dealer/retailer.

XM Radio ID: If tuned to channel 0, this message alternates with the XM™ Radio 8 digit radio ID label. This label is needed to activate the service.

Unknown: If this message is received when tuned to channel 0, there could be a receiver fault. Consult with your dealer/retailer.

Check Antenna: If this message does not clear within a short period of time, the receiver or antenna could have a fault. Consult with your dealer/retailer.

Check XM Receivr: If this message does not clear within a short period of time, the receiver could have a fault. Consult with your dealer/retailer.

XM Not Available: If this message does not clear within a short period of time, the receiver could have a fault. Consult with your dealer/retailer.

Downloaded from www.Manualslib.com manuals search engine

Bluetooth®

Vehicles with a Bluetooth system can use a Bluetooth capable cell phone with a Hands Free Profile to make and receive phone calls. The system can be used while the key is in ON/RUN or ACC/ACCESSORY position. The range of the Bluetooth system can be up to 9.1 m (30 ft). Not all phones support all functions, and not all phones are guaranteed to work with the in-vehicle Bluetooth system. See www.gm.com/bluetooth for more information on compatible phones.

Voice Recognition

The Bluetooth system uses voice recognition to interpret voice commands to dial phone numbers and name tags.

Noise: Keep interior noise levels to a minimum. The system may not recognize voice commands if there is too much background noise.

When to Speak: A short tone sounds after the system responds indicating when it is waiting for a voice command. Wait until the tone and then speak.

How to Speak: Speak clearly in a calm and natural voice.

Audio System

When using the in-vehicle Bluetooth system, sound comes through the vehicle's front audio system speakers and overrides the audio system. Use the audio system volume knob, during a call, to change the volume level. The adjusted volume level remains in memory for later calls. To prevent missed calls, a minimum volume level is used if the volume is turned down too low.

Bluetooth Controls

Use the buttons located on the steering wheel to operate the in-vehicle Bluetooth system. See *Audio Steering Wheel Controls on page 4-79* for more information.

(Push To Talk): Press to answer incoming calls, to confirm system information, and to start speech recognition.

(Phone On Hook): Press to end a call, reject a call, or to cancel an operation.

Downloaded from www.Manualslib.com manuals search engine

Pairing

A Bluetooth enabled cell phone must be paired to the in-vehicle Bluetooth system first and then connected to the vehicle before it can be used. See the cell phone manufacturers user guide for Bluetooth functions before pairing the cell phone. If a Bluetooth phone is not connected, calls will be made using OnStar® Hands-Free Calling, if available. Refer to the OnStar owner's guide for more information.

Pairing Information:

- Up to five cell phones can be paired to the in-vehicle Bluetooth system.
- The pairing process is disabled when the vehicle is moving.
- The in-vehicle Bluetooth system automatically links with the first available paired cell phone in the order the phone was paired.
- Only one paired cell phone can be connected to the in-vehicle Bluetooth system at a time.
- Pairing should only need to be completed once, unless changes to the pairing information have been made or the phone is deleted.

To link to a different paired phone, see Linking to a Different Phone later in this section.

Pairing a Phone

1. Press and hold for two seconds. The system responds with "Ready" followed by a tone.
2. Say "Bluetooth". The system responds with "Bluetooth ready" followed by a tone.
3. Say "Pair". The system responds with instructions and a four digit PIN number. The PIN number will be used in Step 4.
4. Start the Pairing process on the cell phone that will be paired to the vehicle. Reference the cell phone manufacturers user guide for information on this process.

   Locate the device named "General Motors" in the list on the cellular phone and follow the instructions on the cell phone to enter the four digit PIN number that was provided in Step 3.
5. The system prompts for a name for the phone. Use a name that best describes the phone. This name will be used to indicate which phone is connected. The system then confirms the name provided.
6. The system responds with "<Phone name> has been successfully paired" after the pairing process is complete.
7. Repeat Steps 1 through 7 for additional phones to be paired.

Downloaded from www.Manualslib.com manuals search engine

Listing All Paired and Connected Phones

1. Press and hold for two seconds. The system responds with “Ready” followed by a tone.
2. Say “Bluetooth”. The system responds with “Bluetooth ready” followed by a tone.
3. Say “List”. The system lists all the paired Bluetooth devices. If a phone is connected to the vehicle, the system will say “Is connected” after the connected phone.

Deleting a Paired Phone

1. Press and hold for two seconds. The system responds with “Ready” followed by a tone.
2. Say “Bluetooth”. The system responds with “Bluetooth ready” followed by a tone.
3. Say “Delete”. The system asks which phone to delete followed by a tone.
4. Say the name of the phone to be deleted. If the phone name is unknown, use the “List” command for a list of all paired phones. The system responds with “Would you like to delete <phone name>? Yes or No” followed by a tone.
5. Say “Yes” to delete the phone. The system responds with “OK, deleting <phone name>”.

Linking to a Different Phone

1. Press and hold for two seconds. The system responds with “Ready” followed by a tone.
2. Say “Bluetooth”. The system responds with “Bluetooth ready” followed by a tone.
3. Say “Change phone”. The system responds with “Please wait while I search for other phones”.
   - If another phone is found, the response will be “<Phone name> is now connected”.
   - If another phone is not found, the original phone remains connected.

Storing Name Tags

The system can store up to thirty phone numbers as name tags that are shared between the Bluetooth and OnStar systems.

The system uses the following commands to store and retrieve phone numbers:

- Store
- Digit Store
- Directory

Downloaded from www.Manualslib.com manuals search engine

Using the Store Command

The store command allows a phone number to be stored without entering the digits individually.

1. Press and hold for two seconds. The system responds with “Ready” followed by a tone.
2. Say “Store”. The system responds with “Store, number please” followed by a tone.
3. Say the complete phone number to be stored at once with no pauses.
   - If the system recognizes the number it responds with “OK, Storing” and repeats the phone number.
   - If the system is unsure it recognizes the phone number, it responds with “Store” and repeats the number followed by “Please say yes or no”. If the number is correct, say “Yes”. If the number is not correct, say “No”. The system will ask for the number to be re-entered.
4. After the system stores the phone number, it responds with “Please say the name tag” followed by a tone.
5. Say a name tag for the phone number. The name tag is recorded and the system responds with “About to store <name tag>. Does that sound OK?”.
   - If the name tag does not sound correct, say “No” and repeat Step 5.
   - If the name tag sounds correct, say “Yes” and the name tag is stored. After the number is stored the system returns to the main menu.

Using the Digit Store Command

The digit store command allows a phone number to be stored by entering the digits individually.

1. Press and hold for two seconds. The system responds with “Ready” followed by a tone.
2. Say “Digit Store”. The system responds with “Please say the first digit to store” followed by a tone.

Downloaded from www.Manualslib.com manuals search engine

3. Say the first digit to be stored. The system will repeat back the digit it heard followed by a tone. Continue entering digits until the number to be stored is complete.
   - If an unwanted number is recognized by the system, say “Clear” at any time to clear the last number.
   - To hear all of the numbers recognized by the system, say “Verify” at any time and the system will repeat them.
4. After the complete number has been entered, say “Store”. The system responds with “Please say the name tag” followed by a tone.
5. Say a name tag for the phone number. The name tag is recorded and the system responds with “About to store <name tag>. Does that sound OK?”.
   - If the name tag does not sound correct, say “No” and repeat Step 5.
   - If the name tag sounds correct, say “Yes” and the name tag is stored. After the number is stored the system returns to the main menu.

Using the Directory Command

The directory command lists all of the name tags stored by the system. To use the directory command:

1. Press and hold for two seconds. The system responds with “Ready” followed by a tone.
2. Say “Directory”. The system responds with “Directory” and then plays back all of the stored name tags. When the list is complete, the system returns to the main menu.

Deleting Name Tags

The system uses the following commands to delete name tags:

- Delete
- Delete all name tags

Using the Delete Command

The delete command allows specific name tags to be deleted.

To use the delete command:

1. Press and hold for two seconds. The system responds with “Ready” followed by a tone.
2. Say “Delete”. The system responds with “Delete, please say the name tag” followed by a tone.

Downloaded from www.Manualslib.com manuals search engine

3. Say the name tag to be deleted. The system responds with “Would you like to delete, <name tag>? Please say yes or no”.
   - If the name tag is correct, say “Yes” to delete the name tag. The system responds with “OK, deleting <name tag>, returning to the main menu.”
   - If the name tag is incorrect, say “No”. The system responds with “No. OK, let’s try again, please say the name tag.”

Using the Delete All Name Tags Command

The delete all name tags command deletes all stored phone book name tags and route name tags for OnStar, if present.

To use the delete all name tags command:

1. Press and hold for two seconds. The system responds with “Ready” followed by a tone.
2. Say “Delete all name tags”. The system responds with “You are about to delete all name tags stored in your phone directory and your route destination directory. Are you sure you want to do this? Please say yes or no.”
   - Say “Yes” to delete all name tags.
   - Say “No” to cancel the function and return to the main menu.

Making a Call

Calls can be made using the following commands:

- Dial
- Digit Dial
- Call
- Re-dial

Using the Dial Command

1. Press and hold for two seconds. The system responds with “Ready” followed by a tone.
2. Say “Dial”. The system responds with “Dial using <phone name>. Number please” followed by a tone.
3. Say the entire number without pausing.
   - If the system recognizes the number, it responds with “OK, Dialing” and dials the number.
   - If the system does not recognize the number, it confirms the numbers followed by a tone. If the number is correct, say “Yes”. The system responds with “OK, Dialing” and dials the number. If the number is not correct, say “No”. The system will ask for the number to be re-entered.

Downloaded from www.Manualslib.com manuals search engine

Using the Digit Dial Command

1. Press and hold ✆ for two seconds. The system responds with “Ready” followed by a tone.
2. Say “Digit Dial”. The system responds with “Digit dial using <phone name>, please say the first digit to dial” followed by a tone.
3. Say the digit to be dialed one at a time. Following each digit, the system will repeat back the digit it heard followed by a tone.
4. Continue entering digits until the number to be dialed is complete. After the whole number has been entered, say “Dial”. The system responds with “OK, Dialing” and dials the number.
   - If an unwanted number is recognized by the system, say “Clear” at any time to clear the last number.
   - To hear all of the numbers recognized by the system, say “Verify” at any time and the system will repeat them.

Using the Call Command

1. Press and hold ✆ for two seconds. The system responds with “Ready” followed by a tone.
2. Say “Call”. The system responds with “Call using <phone name>. Please say the name tag” followed by a tone.
3. Say the name tag of the person to call.
   - If the system clearly recognizes the name tag it responds with “OK, calling, <name tag>” and dials the number.
   - If the system is unsure it recognizes the right name tag, it confirms the name tag followed by a tone. If the name tag is correct, say “Yes”. The system responds with “OK, calling, <name tag>” and dials the number. If the name tag is not correct, say “No”. The system will ask for the name tag to be re-entered.

Once connected, the person called will be heard through the audio speakers.

Using the Re-dial Command

1. Press and hold ✆ for two seconds. The system responds with “Ready” followed by a tone.
2. After the tone, say “Re-dial”. The system responds with “Re-dial using <phone name>” and dials the last number called from the connected Bluetooth phone.

Once connected, the person called will be heard through the audio speakers.

Downloaded from www.Manualslib.com manuals search engine

Receiving a Call

When an incoming call is received, the audio system mutes and a ring tone is heard in the vehicle.

- Press and begin speaking to answer the call.
- Press to ignore a call.

Call Waiting

Call waiting must be supported on the Bluetooth phone and enabled by the wireless service carrier to work.

- Press to answer an incoming call when another call is active. The original call is placed on hold.
- Press again to return to the original call.
- To ignore the incoming call, continue with the original call with no action.
- Press to disconnect the current call and switch to the call on hold.

Three-Way Calling

Three-Way Calling must be supported on the Bluetooth phone and enabled by the wireless service carrier to work.

1. While on a call press . The system responds with “Ready” followed by a tone.
2. Say “Three-way call”. The system responds with “Three-way call, please say dial or call”.
3. Use the dial or call command to dial the number of the third party to be called.
4. Once the call is connected, press to link all the callers together.

Ending a Call

Press to end a call.

Muting a Call

During a call, all sounds from inside the vehicle can be muted so that the person on the other end of the call cannot hear them.

Downloaded from www.Manualslib.com manuals search engine

To Mute a call

1. Press . The system responds with “Ready” followed by a tone.
2. Say “Mute Call”. The system responds with “Call muted”.

To Cancel Mute

1. Press . The system responds with “Ready” followed by a tone.
2. After the tone, say “Mute Call”. The system responds with “Resuming call”.

Transferring a Call

Audio can be transferred between the in-vehicle Bluetooth system and the cell phone.

To Transfer Audio to the Cell Phone

During a call with the audio in the vehicle:

1. Press . The system responds with “Ready” followed by a tone.
2. Say “Transfer Call.” The system responds with “Transferring call” and the audio will switch from the vehicle to the cell phone.

To Transfer Audio to the In-Vehicle Bluetooth System

The cellular phone must be paired and connected with the Bluetooth system before a call can be transferred. The connection process can take up to two minutes after the key is turned to the ON/RUN or ACC/ACCESSORY position.

During a call with the audio on the cell phone, press for more than two seconds. The audio switches from the cell phone to the vehicle.

Voice Pass-Thru

Voice Pass-Thru allows access to the voice recognition commands on the cell phone. See the cell phone manufacturers user guide to see if the cell phone supports this feature. This feature can be used to verbally access contacts stored in the cell phone.

1. Press and hold for two seconds. The system responds with “Ready” followed by a tone.
2. Say “Bluetooth”. The system responds with “Bluetooth ready” followed by a tone.
3. Say “Voice”. The system responds with “OK, accessing <phone name>”.
   - The cell phone’s normal prompt messages will go through its cycle according to the phone’s operating instructions.

Downloaded from www.Manualslib.com manuals search engine

Dual Tone Multi-Frequency (DTMF) Tones

The in-vehicle Bluetooth system can send numbers and numbers stored as name tags during a call. This is used when calling a menu driven phone system. Account numbers can be programmed into the phonebook for retrieval during menu driven calls.

Sending a Number During a Call

1. Press . The system responds with “Ready” followed by a tone.
2. Say “Dial”. The system responds with “Say a number to send tones” followed by a tone.
3. Say the number to send.
   - If the system clearly recognizes the number it responds with “OK, Sending Number” and the dial tones are sent and the call continues.
   - If the system is not sure it recognized the number properly, it responds “Dial Number, Please say yes or no?” followed by a tone. If the number is correct, say “Yes”. The system responds with “OK, Sending Number” and the dial tones are sent and the call continues.

Sending a Stored Name Tag During a Call

1. Press . The system responds with “Ready” followed by a tone.
2. Say “Send name tag.” The system responds with “Say a name tag to send tones” followed by a tone.
3. Say the name tag to send.
   - If the system clearly recognizes the name tag it responds with “OK, Sending <name tag>” and the dial tones are sent and the call continues.
   - If the system is not sure it recognized the name tag properly, it responds “Dial <name tag>, Please say yes or no?” followed by a tone. If the name tag is correct, say “Yes”. The system responds with “OK, Sending <name tag>” and the dial tones are sent and the call continues.

Clearing the System

Unless information is deleted out of the in-vehicle Bluetooth system, it will be retained indefinitely. This includes all saved name tags in the phonebook and phone pairing information. For information on how to delete this information, see the above sections on Deleting a Paired Phone and Deleting Name Tags.

Downloaded from www.Manualslib.com manuals search engine

Other Information

The Bluetooth® word mark and logos are owned by the Bluetooth® SIG, Inc. and any use of such marks by General Motors is under license. Other trademarks and trade names are those of their respective owners.

See *Radio Frequency Statement on page 8-20* for FCC information.

Theft-Deterrent Feature

THEFTLOCK® is designed to discourage theft of the vehicle's radio by learning a portion of the Vehicle Identification Number (VIN). The radio does not operate if it is stolen or moved to a different vehicle.

Audio Steering Wheel Controls

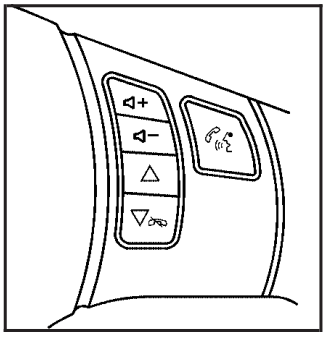

Vehicles with audio steering wheel controls could differ depending on the vehicle's options. Some audio controls can be adjusted at the steering wheel.

+ / – (Volume): Press to increase or to decrease the radio volume.

Downloaded from www.Manualslib.com manuals search engine

△ / ▽ **(Next / Previous):** Press to change radio stations, select tracks on a CD, or to select tracks and navigate folders on an iPod® or USB device.

To change radio stations:

- Press and release △ or ▽ to go to the next or previous radio station stored as a preset.
- Press and hold △ or ▽ to go to the next or previous radio station in the selected band with a strong signal.

To select tracks on a CD:

Press and release △ or ▽ to go to the next or previous track.

To select tracks on an iPod or USB device:

1. Press and hold △ or ▽ while listening to a song until the contents of the current folder display on the radio display.
2. Press and release △ or ▽ to scroll up or down the list, then press and hold △ to play the highlighted track.

To navigate folders on an iPod or USB device:

1. Press and hold △ or ▽ while listening to a song until the contents of the current folder display on the radio display.
2. Press and hold ▽ to go back to the previous folder list.
3. Press and release △ or ▽ to scroll up or down the list.
   - To select a folder, press and hold △ when the folder is highlighted.
   - To go back further in the folder list, press and hold ▽.

(End): Press to reject an incoming call, or end a current call.

(Mute / Voice Recognition): Press to silence the vehicle speakers only. Press again to turn the sound on.

For vehicles with Bluetooth® or OnStar® systems press and hold for longer than two seconds to interact with those systems. See *Bluetooth® on page 4-69* and the OnStar Owner's Guide for more information.

Downloaded from www.Manualslib.com manuals search engine

Radio Reception

Frequency interference and static can occur during normal radio reception if items such as cell phone chargers, vehicle convenience accessories, and external electronic devices are plugged into the accessory power outlet. If there is interference or static, unplug the item from the accessory power outlet.

AM

The range for most AM stations is greater than for FM, especially at night. The longer range can cause station frequencies to interfere with each other. For better radio reception, most AM radio stations boost the power levels during the day, and then reduce these levels during the night. Static can also occur when things like storms and power lines interfere with radio reception. When this happens, try reducing the treble on the radio.

FM Stereo

FM signals only reach about 10 to 40 miles (16 to 65 km). Although the radio has a built-in electronic circuit that automatically works to reduce interference, some static can occur, especially around tall buildings or hills, causing the sound to fade in and out.

XM™ Satellite Radio Service

XM Satellite Radio Service gives digital radio reception from coast-to-coast in the 48 contiguous United States, and in Canada. Just as with FM, tall buildings or hills can interfere with satellite radio signals, causing the sound to fade in and out. In addition, traveling or standing under heavy foliage, bridges, garages, or tunnels may cause loss of the XM signal for a period of time.

Downloaded from www.Manualslib.com manuals search engine

Cellular Phone Usage

Cellular phone usage may cause interference with the vehicle's radio. This interference may occur when making or receiving phone calls, charging the phone's battery, or simply having the phone on. This interference causes an increased level of static while listening to the radio. If static is received while listening to the radio, unplug the cellular phone and turn it off.

Fixed Mast Antenna

The fixed mast antenna can withstand most car washes without being damaged as long as it is securely attached to the base. If the mast becomes slightly bent, straighten it out by hand. If the mast is badly bent, replace it.

Occasionally check to make sure the antenna is tightened to its base. If tightening is required, tighten by hand until fully seated plus one quarter turn.

XM™ Satellite Radio Antenna System

The XM Satellite Radio antenna is located on the roof or the rear of the vehicle. Keep the antenna clear of obstructions for clear radio reception.

Chime Level Adjustment

The radio may be used to adjust the vehicle's chime level. If the radio can be used to change the volume level of the chime, press and hold the sixth numbered pushbutton or the sixth FAV pushbutton with the ignition on and the radio power off. The volume level changes between Normal and Loud. The selected volume level appears on the radio display.

Removing the radio and not replacing it with a factory radio or chime module will disable vehicle chimes.

Downloaded from www.Manualslib.com manuals search engine

Section 5 Driving Your Vehicle

Your Driving, the Road, and the Vehicle 5-2
Defensive Driving 5-2
Drunk Driving 5-2
Control of a Vehicle 5-3
Braking 5-4
Antilock Brake System (ABS) 5-5
Braking in Emergencies 5-5
Electronic Stability Control (ESC) 5-6
Traction Control System (TCS) 5-9
Limited-Slip Rear Axle 5-11
Steering 5-11
Off-Road Recovery 5-13
Passing 5-13
Loss of Control 5-13
Driving at Night 5-15
Driving in Rain and on Wet Roads 5-16
Before Leaving on a Long Trip 5-17
Highway Hypnosis 5-17
Hill and Mountain Roads 5-18
Winter Driving 5-19
If Your Vehicle is Stuck in Sand, Mud, Ice, or Snow 5-21
Rocking Your Vehicle to Get It Out 5-22
Loading the Vehicle 5-22
Towing 5-28
Towing Your Vehicle 5-28
Recreational Vehicle Towing 5-28
Towing a Trailer 5-28

Downloaded from www.Manualslib.com manuals search engine

Your Driving, the Road, and the Vehicle

Defensive Driving

Defensive driving means “always expect the unexpected.” The first step in driving defensively is to wear your safety belt — See *Safety Belts: They Are for Everyone on page 2-6*.

⚠ WARNING:

Assume that other road users (pedestrians, bicyclists, and other drivers) are going to be careless and make mistakes. Anticipate what they might do and be ready. In addition:

- Allow enough following distance between you and the driver in front of you.
- Focus on the task of driving.

Driver distraction can cause collisions resulting in injury or possible death. These simple defensive driving techniques could save your life.

Drunk Driving

⚠ WARNING:

Drinking and then driving is very dangerous. Your reflexes, perceptions, attentiveness, and judgment can be affected by even a small amount of alcohol. You can have a serious — or even fatal — collision if you drive after drinking. Do not drink and drive or ride with a driver who has been drinking. Ride home in a cab; or if you are with a group, designate a driver who will not drink.

Death and injury associated with drinking and driving is a global tragedy.

Alcohol affects four things that anyone needs to drive a vehicle: judgment, muscular coordination, vision, and attentiveness.

Downloaded from www.Manualslib.com manuals search engine

Police records show that almost 40 percent of all motor vehicle-related deaths involve alcohol. In most cases, these deaths are the result of someone who was drinking and driving. In recent years, more than 17,000 annual motor vehicle-related deaths have been associated with the use of alcohol, with about 250,000 people injured.

For persons under 21, it is against the law in every U.S. state to drink alcohol. There are good medical, psychological, and developmental reasons for these laws.

The obvious way to eliminate the leading highway safety problem is for people never to drink alcohol and then drive.

Medical research shows that alcohol in a person's system can make crash injuries worse, especially injuries to the brain, spinal cord, or heart. This means that when anyone who has been drinking — driver or passenger — is in a crash, that person's chance of being killed or permanently disabled is higher than if the person had not been drinking.

Control of a Vehicle

The following three systems help to control the vehicle while driving — brakes, steering, and accelerator. At times, as when driving on snow or ice, it is easy to ask more of those control systems than the tires and road can provide. Meaning, you can lose control of the vehicle. See *Traction Control System (TCS) on page 5-9* and *Electronic Stability Control (ESC) on page 5-6*.

Adding non-dealer/non-retailer accessories can affect vehicle performance. See *Accessories and Modifications on page 6-3*.

Downloaded from www.Manualslib.com manuals search engine

Braking

See *Brake System Warning Light on page 4-23*.

Braking action involves perception time and reaction time. Deciding to push the brake pedal is perception time. Actually doing it is reaction time.

Average reaction time is about three-fourths of a second. But that is only an average. It might be less with one driver and as long as two or three seconds or more with another. Age, physical condition, alertness, coordination, and eyesight all play a part. So do alcohol, drugs, and frustration. But even in three-fourths of a second, a vehicle moving at 60 mph (100 km/h) travels 66 feet (20 m). That could be a lot of distance in an emergency, so keeping enough space between the vehicle and others is important.

And, of course, actual stopping distances vary greatly with the surface of the road, whether it is pavement or gravel; the condition of the road, whether it is wet, dry, or icy; tire tread; the condition of the brakes; the weight of the vehicle; and the amount of brake force applied.

Avoid needless heavy braking. Some people drive in spurts — heavy acceleration followed by heavy braking — rather than keeping pace with traffic. This is a mistake. The brakes might not have time to cool between hard stops. The brakes will wear out much faster with a lot of heavy braking. Keeping pace with the traffic and allowing realistic following distances eliminates a lot of unnecessary braking. That means better braking and longer brake life.

If the engine ever stops while the vehicle is being driven, brake normally but do not pump the brakes. If the brakes are pumped, the pedal could get harder to push down. If the engine stops, there will still be some power brake assist but it will be used when the brake is applied. Once the power assist is used up, it can take longer to stop and the brake pedal will be harder to push.

Adding non-dealer/non-retailer accessories can affect vehicle performance. See *Accessories and Modifications on page 6-3*.

Downloaded from www.Manualslib.com manuals search engine

Antilock Brake System (ABS)

This vehicle has Electronic Stability Control (ESC) with the Antilock Brake System (ABS), an advanced electronic braking system that helps prevent a braking skid.

When the engine is started and the vehicle begins to drive away, ABS checks itself. A momentary motor or clicking noise might be heard while this test is going on, and it might even be noticed that the brake pedal moves a little. This is normal.

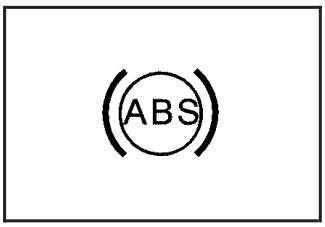

If there is a problem with ABS, this warning light stays on. See *Antilock Brake System (ABS) Warning Light on page 4-24*.

Let us say the road is wet and you are driving safely. Suddenly, an animal jumps out in front of you. You slam on the brakes and continue braking. Here is what happens with ABS:

A computer senses that the wheels are slowing down. If one of the wheels is about to stop rolling, the computer will separately work the brakes at each wheel.

ABS can change the brake pressure to each wheel, as required, faster than any driver could. This can help the driver steer around the obstacle while braking hard.

As the brakes are applied, the computer keeps receiving updates on wheel speed and controls braking pressure accordingly.

Remember: ABS does not change the time needed to get a foot up to the brake pedal or always decrease stopping distance. If you get too close to the vehicle in front of you, there will not be enough time to apply the brakes if that vehicle suddenly slows or stops. Always leave enough room up ahead to stop, even with ABS.

Using ABS

Do not pump the brakes. Just hold the brake pedal down firmly and let antilock work. The antilock pump or motor operating might be heard and the brake pedal pulsating might be felt, but this is normal.

Braking in Emergencies

ABS allows the driver to steer and brake at the same time. In many emergencies, steering can help more than even the very best braking.

Downloaded from www.Manualslib.com manuals search engine

Brake Assist

This vehicle has a Brake Assist feature designed to assist the driver in stopping or decreasing vehicle speed in emergency driving conditions. This feature uses the stability system hydraulic brake control module to supplement the power brake system under conditions where the driver has quickly and forcefully applied the brake pedal in an attempt to quickly stop or slow down the vehicle. The stability system hydraulic brake control module increases brake pressure at each corner of the vehicle until the ABS activates. Minor brake pedal pulsations or pedal movement during this time is normal and the driver should continue to apply the brake pedal as the driving situation dictates The Brake Assist feature will automatically disengage when the brake pedal is released or brake pedal pressure is quickly decreased.

Electronic Stability Control (ESC)

The vehicle has an Electronic Stability Control (ESC) system which combines antilock brake, traction and stability control systems and helps the driver maintain directional control of the vehicle in most driving conditions.

ESC activates when the computer senses a discrepancy between the intended path and the direction the vehicle is actually traveling. ESC selectively applies braking pressure at any one of the vehicle's brakes to help steer the vehicle in the desired direction.

When you first start the vehicle and begin to drive away, the system performs several diagnostic checks to ensure there are no problems. The system may be heard or felt while it is working. This is normal and does not mean there is a problem with the vehicle. The system should initialize before the vehicle reaches 20 mph (32 km/h).

Downloaded from www.Manualslib.com manuals search engine

If the system fails to turn on or activate, the ESC/TCS light comes on, and the ESC OFF and/or SERVICE ESC message displays.

For more information, see *Driver Information Center (DIC) on page 4-33*.

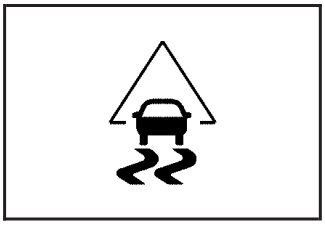

This light flashes on the instrument panel cluster while the ESC system is both on and activated.

When the system activates, an ESC ACTIVE message displays on the DIC. The system may be heard or felt while it is working; this is normal. Continue to steer the vehicle in the intended direction.

When the light comes on and the message(s) SERVICE ESC, ESC OFF, or both are displayed, the system will not assist the driver in maintaining directional control of the vehicle. Adjust your driving accordingly.

The Electronic Stability Control (ESC) system is automatically enabled whenever the vehicle is started. To assist the driver with vehicle directional control, especially in slippery road conditions, the system should always be left on. But, ESC can be turned off if needed.

If the vehicle is in cruise control when the system begins to assist the driver maintain directional control of the vehicle, the ESC/TCS light will flash and the cruise control will automatically disengage. The cruise control system may be reengaged when road conditions allow. See *Cruise Control on page 4-7*.

The ESC/TCS button is located on the instrument panel.

To turn the traction control system off or back on, press and release the ESC/TCS button. To disable both traction control and ESC, press and hold the button until TRACTION OFF and ESC OFF messages appear, and the ESC/TCS light comes on.

It is recommended to leave the system on for normal driving conditions, but it may be necessary to turn the system off if the vehicle is stuck in sand, mud, ice or snow, and you want to “rock” the vehicle to attempt to free it. It may also be necessary to turn off the system when driving in extreme off-road conditions where high wheel spin is required. See *If Your Vehicle is Stuck in Sand, Mud, Ice, or Snow on page 5-21*. Also, see “Competitive Driving Mode” later in this section.

Downloaded from www.Manualslib.com manuals search engine

ESC may also turn off automatically if it determines that a problem exists with the system. The ESC OFF and SERVICE ESC messages and the ESC/TCS light will be on solid to warn the driver that ESC is disabled and requires service. If the problem does not clear after restarting the vehicle, see your dealer/retailer for service. See *DIC Warnings and Messages on page 4-36* for more information.

Adding non-dealer/non-retailer accessories can affect the vehicle's performance. See *Accessories and Modifications on page 6-3* for more information.

Competitive Driving Mode

The driver can select this optional handling mode by pressing the ESC/TCS button on the console two times quickly. COMPETITIVE MODE displays in the DIC. See *DIC Warnings and Messages on page 4-36* for more information. Competitive Driving Mode allows the driver to have full control of the rear wheels while the ESC system helps maintain directional control of the vehicle by selective brake application. The ESC/TCS light will be on and the traction control system will not be operating. Adjust your driving accordingly. This electronic stability control mode is recommended only for use during closed track events and competitive driving venues.

When the ESC/TCS button is pressed again, or the vehicle is restarted, the ESC and TCS turn back on.

Notice: **When traction control is turned off, or Competitive Driving Mode is active, it is possible to lose traction. If you attempt to shift with the drive wheels spinning with a loss of traction, it is possible to cause damage to the transmission. Do not attempt to shift when the drive wheels do not have traction. Damage caused by misuse of the vehicle is not covered. See the warranty book for additional information.**

Downloaded from www.Manualslib.com manuals search engine

Traction Control System (TCS)

The vehicle has a Traction Control System (TCS) that limits wheel spin. This is especially useful in slippery road conditions. The system operates only if it senses that the rear wheels are spinning too much or are beginning to lose traction. When this happens, the system works the rear brakes and reduces engine power by closing the throttle and managing engine spark to limit wheel spin.

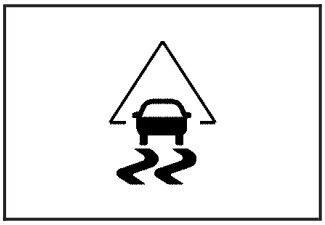

This light will flash when the traction control system is limiting wheel spin.

The system may be heard or felt while it is working, but this is normal.

If the vehicle is in cruise control when TCS begins to limit wheel spin, the ESC/TCS light will flash and the cruise control will automatically disengage. The cruise control may be reengaged when road conditions allow. See *Cruise Control on page 4-7*.

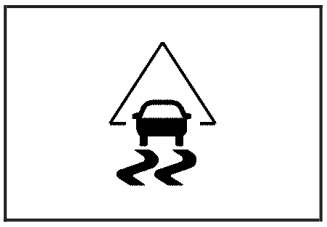

When this light is on solid and either the SERVICE TRACTION or TRACTION OFF message is displayed, the system will not limit wheel spin.

Adjust your driving accordingly. See *DIC Warnings and Messages on page 4-36* for more information.

The Traction Control System is automatically enabled whenever the vehicle is started. To limit wheel spin, especially in slippery road conditions, always leave the system enabled. TCS can be turned off if needed.

It is recommended to leave the system on for normal driving conditions, but it may be necessary to turn the system off if the vehicle is stuck in sand, mud, ice or snow, and you want to “rock” the vehicle to attempt to free it. It may also be necessary to turn off the system when driving in extreme off-road conditions where high wheel spin is required. See *If Your Vehicle is Stuck in Sand, Mud, Ice, or Snow on page 5-21*.

Downloaded from www.Manualslib.com manuals search engine

To turn the system off or on, press and release the ESC/TCS button located on the instrument panel.

The DIC will display the appropriate message the button is pressed.

Traction Control Operation

Traction control limits wheel spin by reducing engine power to the wheels (engine speed management) and by applying brakes to each individual wheel (brake-traction control) as necessary.

The traction control system is enabled automatically when the vehicle is started, and it will activate and flash the ESC/TCS light and display the LOW TRACTION message if it senses either of the rear wheels are spinning or beginning to lose traction while driving. For more information on the LOW TRACTION message, see *Driver Information Center (DIC) on page 4-33*.

Notice: **If the wheel(s) of one axle are allowed to spin excessively while the ESC/TCS, ABS and Brake warning lights and the SERVICE ESC and/or SERVICE TRACTION messages are displayed, the differential could be damaged. The repairs would not be covered by the vehicle warranty. Reduce engine power and do not spin the wheel(s) excessively while these lights and this message are displayed.**

Notice: **When traction control is turned off, or Competitive Driving Mode is active, it is possible to lose traction. If you attempt to shift with the drive wheels spinning with a loss of traction, it is possible to cause damage to the transmission. Do not attempt to shift when the drive wheels do not have traction. Damage caused by misuse of the vehicle is not covered. See the warranty book for additional information.**

The traction control system may activate on dry or rough roads or under conditions such as heavy acceleration while turning or abrupt upshifts/downshifts of the transmission. When this happens, a reduction in acceleration may be noticed, or a noise or vibration may be heard. This is normal.

Adding non-dealer/non-retailer accessories can affect the vehicle's performance. See *Accessories and Modifications on page 6-3* for more information.

Downloaded from www.Manualslib.com manuals search engine

Limited-Slip Rear Axle

Vehicles with a limited slip rear axle can give more traction on snow, mud, ice, sand or gravel. It works like a standard axle most of the time, but when traction is low, this feature will allow the rear wheel with the most traction to move the vehicle.

During a sudden shift, such as shifting from 1 (First) to 2 (Second) gear at low engine speeds or suddenly applying the clutch, a clunking or rattling noise may be heard or felt. This is normal.

Steering

Power Steering

If power steering assist is lost because the engine stops or the system is not functioning, the vehicle can be steered but it will take more effort.

Steering Tips

It is important to take curves at a reasonable speed.

Traction in a curve depends on the condition of the tires and the road surface, the angle at which the curve is banked, and vehicle speed. While in a curve, speed is the one factor that can be controlled.

If there is a need to reduce speed, do it before entering the curve, while the front wheels are straight.

Try to adjust the speed so you can drive through the curve. Maintain a reasonable, steady speed. Wait to accelerate until out of the curve, and then accelerate gently into the straightaway.

Downloaded from www.Manualslib.com manuals search engine

Steering in Emergencies

There are times when steering can be more effective than braking. For example, you come over a hill and find a truck stopped in your lane, or a car suddenly pulls out from nowhere, or a child darts out from between parked cars and stops right in front of you. These problems can be avoided by braking — if you can stop in time. But sometimes you cannot stop in time because there is no room. That is the time for evasive action — steering around the problem.

The vehicle can perform very well in emergencies like these. First apply the brakes. See *Braking on page 5-4*. It is better to remove as much speed as possible from a collision. Then steer around the problem, to the left or right depending on the space available.

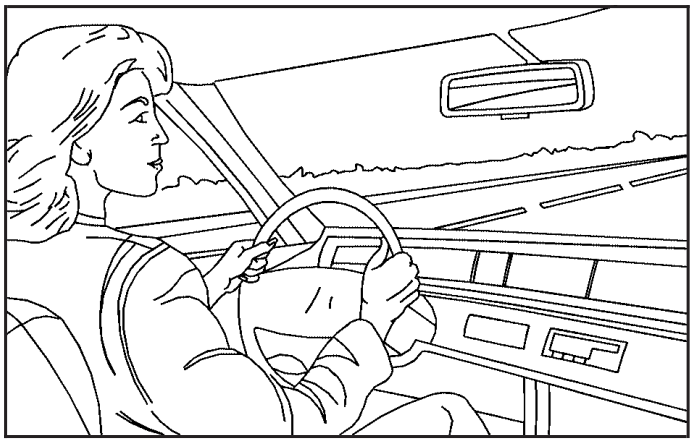

An emergency like this requires close attention and a quick decision. If holding the steering wheel at the recommended 9 and 3 o'clock positions, it can be turned a full 180 degrees very quickly without removing either hand. But you have to act fast, steer quickly, and just as quickly straighten the wheel once you have avoided the object.

The fact that such emergency situations are always possible is a good reason to practice defensive driving at all times and wear safety belts properly.

Downloaded from www.Manualslib.com manuals search engine

Off-Road Recovery

The vehicle's right wheels can drop off the edge of a road onto the shoulder while driving.

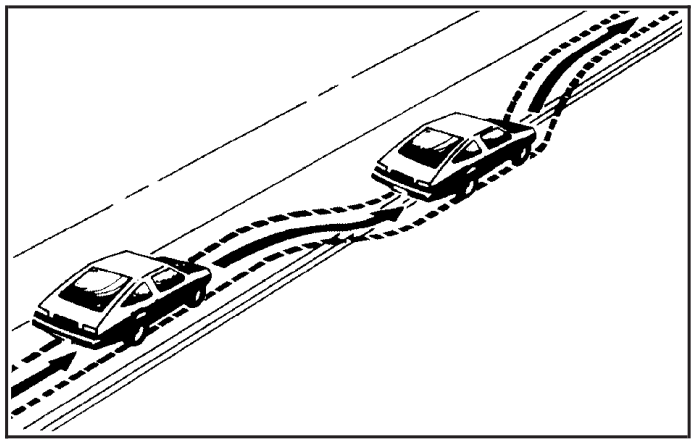

If the level of the shoulder is only slightly below the pavement, recovery should be fairly easy. Ease off the accelerator and then, if there is nothing in the way, steer so that the vehicle straddles the edge of the pavement. Turn the steering wheel 8 to 13 cm (3 to 5 inches), about one-eighth turn, until the right front tire contacts the pavement edge. Then turn the steering wheel to go straight down the roadway.

Passing

Passing another vehicle on a two-lane road can be dangerous. To reduce the risk of danger while passing:

- Look down the road, to the sides, and to crossroads for situations that might affect a successful pass. If in doubt, wait.
- Watch for traffic signs, pavement markings, and lines that could indicate a turn or an intersection. Never cross a solid or double-solid line on your side of the lane.
- Do not get too close to the vehicle you want to pass. Doing so can reduce your visibility.
- Wait your turn to pass a slow vehicle.
- When you are being passed, ease to the right.

Loss of Control

Let us review what driving experts say about what happens when the three control systems — brakes, steering, and acceleration — do not have enough friction where the tires meet the road to do what the driver has asked.

In any emergency, do not give up. Keep trying to steer and constantly seek an escape route or area of less danger.

Downloaded from www.Manualslib.com manuals search engine

Skidding

In a skid, a driver can lose control of the vehicle. Defensive drivers avoid most skids by taking reasonable care suited to existing conditions, and by not overdriving those conditions. But skids are always possible.

The three types of skids correspond to the vehicle's three control systems. In the braking skid, the wheels are not rolling. In the steering or cornering skid, too much speed or steering in a curve causes tires to slip and lose cornering force. And in the acceleration skid, too much throttle causes the driving wheels to spin.

Remember: The Traction Control System (TCS) helps to avoid only the acceleration skid. See *Traction Control System (TCS) on page 5-9*. If the TCS system is off, then an acceleration skid is best handled by easing your foot off the accelerator pedal.

If the vehicle starts to slide, ease your foot off the accelerator pedal and quickly steer the way you want the vehicle to go. If you start steering quickly enough, the vehicle may straighten out. Always be ready for a second skid if it occurs.

The Electronic Stability Control (ESC) system might activate. See *Electronic Stability Control (ESC) on page 5-6*.

Of course, traction is reduced when water, snow, ice, gravel, or other material is on the road. For safety, slow down and adjust your driving to these conditions. It is important to slow down on slippery surfaces because stopping distance will be longer and vehicle control more limited.

While driving on a surface with reduced traction, try your best to avoid sudden steering, acceleration, or braking, including reducing vehicle speed by shifting to a lower gear. Any sudden changes could cause the tires to slide. You might not realize the surface is slippery until the vehicle is skidding. Learn to recognize warning clues — such as enough water, ice, or packed snow on the road to make a mirrored surface — and slow down when you have any doubt.

Even though the vehicle has Electronic Stability Control (ESC) with Antilock Brake System (ABS), remember: ABS helps avoid only the braking skid.

If the ABS is ever disabled, in a braking skid, where the wheels are no longer rolling, release enough pressure on the brakes to get the wheels rolling again. This restores steering control. Push the brake pedal down steadily when you have to stop suddenly. As long as the wheels are rolling, you will have steering control.

Downloaded from www.Manualslib.com manuals search engine

Driving at Night

Night driving is more dangerous than day driving because some drivers are likely to be impaired — by alcohol or drugs, with night vision problems, or by fatigue.

Night driving tips include:

- Drive defensively.
- Do not drink and drive.
- Reduce headlamp glare by adjusting the inside rearview mirror.
- Slow down and keep more space between you and other vehicles because headlamps can only light up so much road ahead.
- Watch for animals.
- When tired, pull off the road.
- Do not wear sunglasses.
- Avoid staring directly into approaching headlamps.
- Keep the windshield and all glass on your vehicle clean — inside and out.
- Keep your eyes moving, especially during turns or curves.

No one can see as well at night as in the daytime. But, as we get older, these differences increase. A 50-year-old driver might need at least twice as much light to see the same thing at night as a 20-year-old.

Downloaded from www.Manualslib.com manuals search engine

Driving in Rain and on Wet Roads

Rain and wet roads can reduce vehicle traction and affect your ability to stop and accelerate. Always drive slower in these types of driving conditions and avoid driving through large puddles and deep-standing or flowing water.

⚠ WARNING:

Wet brakes can cause crashes. They might not work as well in a quick stop and could cause pulling to one side. You could lose control of the vehicle.

After driving through a large puddle of water or a car/vehicle wash, lightly apply the brake pedal until the brakes work normally.

Flowing or rushing water creates strong forces. Driving through flowing water could cause your vehicle to be carried away. If this happens, you and other vehicle occupants could drown. Do not ignore police warnings and be very cautious about trying to drive through flowing water.

Hydroplaning

Hydroplaning is dangerous. Water can build up under your vehicle's tires so they actually ride on the water. This can happen if the road is wet enough and you are going fast enough. When your vehicle is hydroplaning, it has little or no contact with the road.

There is no hard and fast rule about hydroplaning. The best advice is to slow down when the road is wet.

Other Rainy Weather Tips

Besides slowing down, other wet weather driving tips include:

- Allow extra following distance.
- Pass with caution.
- Keep windshield wiping equipment in good shape.
- Keep the windshield washer fluid reservoir filled.
- Have good tires with proper tread depth. See *Tires on page 6-47*.
- Turn off cruise control.

Downloaded from www.Manualslib.com manuals search engine

Before Leaving on a Long Trip

To prepare your vehicle for a long trip, consider having it serviced by your dealer/retailer before departing.

Things to check on your own include:

- *Windshield Washer Fluid:* Reservoir full? Windows clean — inside and outside?
- *Wiper Blades:* In good shape?
- *Fuel, Engine Oil, Other Fluids:* All levels checked?
- *Lamps:* Do they all work and are lenses clean?
- *Tires:* Are treads good? Are tires inflated to recommended pressure?
- *Weather and Maps:* Safe to travel? Have up-to-date maps?

Highway Hypnosis

Always be alert and pay attention to your surroundings while driving. If you become tired or sleepy, find a safe place to park your vehicle and rest.

Other driving tips include:

- Keep the vehicle well ventilated.
- Keep interior temperature cool.
- Keep your eyes moving — scan the road ahead and to the sides.
- Check the rearview mirror and vehicle instruments often.

Downloaded from www.Manualslib.com manuals search engine

Hill and Mountain Roads

Driving on steep hills or through mountains is different than driving on flat or rolling terrain. Tips for driving in these conditions include:

- Keep the vehicle serviced and in good shape.
- Check all fluid levels and brakes, tires, cooling system, and transmission.
- Going down steep or long hills, shift to a lower gear.

⚠ WARNING:

If you do not shift down, the brakes could get so hot that they would not work well. You would then have poor braking or even none going down a hill. You could crash. Shift down to let the engine assist the brakes on a steep downhill slope.

⚠ WARNING:

Coasting downhill in N (Neutral) or with the ignition off is dangerous. The brakes will have to do all the work of slowing down and they could get so hot that they would not work well. You would then have poor braking or even none going down a hill. You could crash. Always have the engine running and the vehicle in gear when going downhill.

- Stay in your own lane. Do not swing wide or cut across the center of the road. Drive at speeds that let you stay in your own lane.
- Top of hills: Be alert — something could be in your lane (stalled car, accident).
- Pay attention to special road signs (falling rocks area, winding roads, long grades, passing or no-passing zones) and take appropriate action.

Downloaded from www.Manualslib.com manuals search engine

Winter Driving

Driving on Snow or Ice

Drive carefully when there is snow or ice between the tires and the road, creating less traction or grip. Wet ice can occur at about 32°F (0°C) when freezing rain begins to fall, resulting in even less traction. Avoid driving on wet ice or in freezing rain until roads can be treated with salt or sand.

Drive with caution, whatever the condition. Accelerate gently so traction is not lost. Accelerating too quickly causes the wheels to spin and makes the surface under the tires slick, so there is even less traction.

Try not to break the fragile traction. If you accelerate too fast, the drive wheels will spin and polish the surface under the tires even more.

The *Traction Control System (TCS) on page 5-9* improves the ability to accelerate on slippery roads, but slow down and adjust your driving to the road conditions. When driving through deep snow, turn off the traction control system to help maintain vehicle motion at lower speeds.

The *Antilock Brake System (ABS) on page 5-5* improves vehicle stability during hard stops on a slippery roads, but apply the brakes sooner than when on dry pavement.

Allow greater following distance on any slippery road and watch for slippery spots. Icy patches can occur on otherwise clear roads in shaded areas. The surface of a curve or an overpass can remain icy when the surrounding roads are clear. Avoid sudden steering maneuvers and braking while on ice.

Turn off cruise control, if equipped, on slippery surfaces.

Downloaded from www.Manualslib.com manuals search engine

Blizzard Conditions

Being stuck in snow can be in a serious situation. Stay with the vehicle unless there is help nearby. If possible, use the *Roadside Assistance Program on page 8-7*. To get help and keep everyone in the vehicle safe:

- Turn on the *Hazard Warning Flashers on page 4-3*.
- Tie a red cloth to an outside mirror.

⚠ WARNING:

Snow can trap engine exhaust under the vehicle. This may cause exhaust gases to get inside. Engine exhaust contains carbon monoxide (CO) which cannot be seen or smelled. It can cause unconsciousness and even death.

If the vehicle is stuck in the snow:

- Clear away snow from around the base of your vehicle, especially any that is blocking the exhaust pipe.
- Check again from time to time to be sure snow does not collect there.

WARNING: (Continued)

WARNING: (Continued)

- Open a window about 5 cm (two inches) on the side of the vehicle that is away from the wind to bring in fresh air.
- Fully open the air outlets on or under the instrument panel.
- Adjust the Climate Control system to a setting that circulates the air inside the vehicle and set the fan speed to the highest setting. See Climate Control System in the Index.

For more information about carbon monoxide, see *Engine Exhaust on page 3-28*.

Snow can trap exhaust gases under your vehicle. This can cause deadly CO (carbon monoxide) gas to get inside. CO could overcome you and kill you. You cannot see it or smell it, so you might not know it is in your vehicle. Clear away snow from around the base of your vehicle, especially any that is blocking the exhaust.

Run the engine for short periods only as needed to keep warm, but be careful.

Downloaded from www.Manualslib.com manuals search engine

To save fuel, run the engine for only short periods as needed to warm the vehicle and then shut the engine off and close the window most of the way to save heat. Repeat this until help arrives but only when you feel really uncomfortable from the cold. Moving about to keep warm also helps.

If it takes some time for help to arrive, now and then when you run the engine, push the accelerator pedal slightly so the engine runs faster than the idle speed. This keeps the battery charged to restart the vehicle and to signal for help with the headlamps. Do this as little as possible to save fuel.

If Your Vehicle is Stuck in Sand, Mud, Ice, or Snow

Slowly and cautiously spin the wheels to free the vehicle when stuck in sand, mud, ice, or snow. See *Rocking Your Vehicle to Get It Out on page 5-22*.

If the vehicle has a traction system, it can often help to free a stuck vehicle. Refer to the vehicle's traction system in the Index. If stuck too severely for the traction system to free the vehicle, turn the traction system off and use the rocking method.

⚠ WARNING:

If the vehicle's tires spin at high speed, they can explode, and you or others could be injured. The vehicle can overheat, causing an engine compartment fire or other damage. Spin the wheels as little as possible and avoid going above 55 km/h (35 mph) as shown on the speedometer.

For information about using tire chains on the vehicle, see *Tire Chains on page 6-70*.

Downloaded from www.Manualslib.com manuals search engine

Rocking Your Vehicle to Get It Out

Turn the steering wheel left and right to clear the area around the front wheels. Turn off any traction or stability system. Shift back and forth between R (Reverse) and a forward gear, or with a manual transmission, between 1 (First) or 2 (Second) and R (Reverse), spinning the wheels as little as possible. To prevent transmission wear, wait until the wheels stop spinning before shifting gears. Release the accelerator pedal while shifting, and press lightly on the accelerator pedal when the transmission is in gear. Slowly spinning the wheels in the forward and reverse directions causes a rocking motion that could free the vehicle. If that does not get the vehicle out after a few tries, it might need to be towed out. If the vehicle does need to be towed out, see *Towing Your Vehicle on page 5-28*.

Loading the Vehicle

It is very important to know how much weight your vehicle can carry. This weight is called the vehicle capacity weight and includes the weight of all occupants, cargo, and all nonfactory-installed options. Two labels on your vehicle show how much weight it may properly carry, the Tire and Loading Information label and the Certification label.

⚠ WARNING:

Do not load the vehicle any heavier than the Gross Vehicle Weight Rating (GVWR), or either the maximum front or rear Gross Axle Weight Rating (GAWR). If you do, parts on the vehicle can break, and it can change the way your vehicle handles. These could cause you to lose control and crash. Also, overloading can shorten the life of the vehicle.

Downloaded from www.Manualslib.com manuals search engine

Tire and Loading Information Label

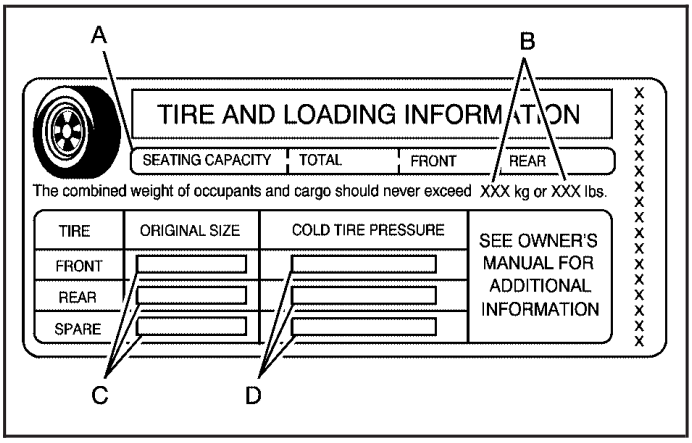

Label Example

A vehicle specific Tire and Loading Information label is attached to the center pillar (B-pillar) of your vehicle. With the driver's door open, you will find the label attached below the door latch. This label shows the number of occupant seating positions (A), and the maximum vehicle capacity weight (B) in kilograms and pounds.

The Tire and Loading Information label also shows the size of the original equipment tires (C) and the recommended cold tire inflation pressures (D). For more information on tires and inflation see *Tires on page 6-47* and *Inflation - Tire Pressure on page 6-54*.

There is also important loading information on the vehicle Certification label. It tells you the Gross Vehicle Weight Rating (GVWR) and the Gross Axle Weight Rating (GAWR) for the front and rear axle. See "Certification Label" later in this section.

Downloaded from www.Manualslib.com manuals search engine

Steps for Determining Correct Load Limit

1. Locate the statement “The combined weight of occupants and cargo should never exceed XXX kg or XXX lbs” on your vehicle’s placard.
2. Determine the combined weight of the driver and passengers that will be riding in your vehicle.
3. Subtract the combined weight of the driver and passengers from XXX kg or XXX lbs.
4. The resulting figure equals the available amount of cargo and luggage load capacity. For example, if the “XXX” amount equals 1400 lbs and there will be five 150 lb passengers in your vehicle, the amount of available cargo and luggage load capacity is 650 lbs (1400 – 750 (5 x 150) = 650 lbs).
5. Determine the combined weight of luggage and cargo being loaded on the vehicle. That weight may not safely exceed the available cargo and luggage load capacity calculated in Step 4.
6. If your vehicle will be towing a trailer, the load from your trailer will be transferred to your vehicle. Consult this manual to determine how this reduces the available cargo and luggage load capacity of your vehicle.

   Your vehicle is neither designed nor intended to tow a trailer.

Downloaded from www.Manualslib.com manuals search engine

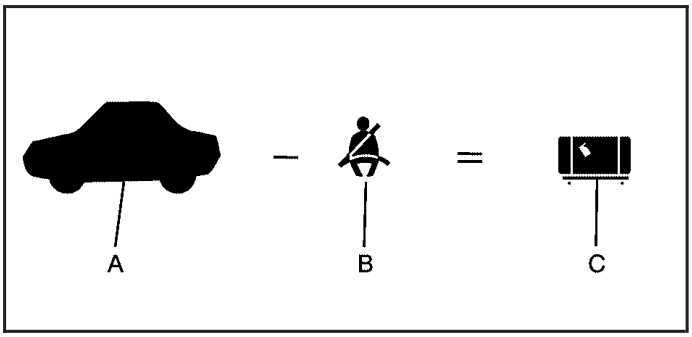

Example 1

Item	Description	Total
A	Vehicle Capacity Weight for Example 1 =	400 lbs (181 kg)
B	Subtract Occupant Weight @ 150 lbs (68 kg) x 1 =	150 lbs (68 kg)
C	Available Occupant and Cargo Weight =	250 lbs (113 kg)

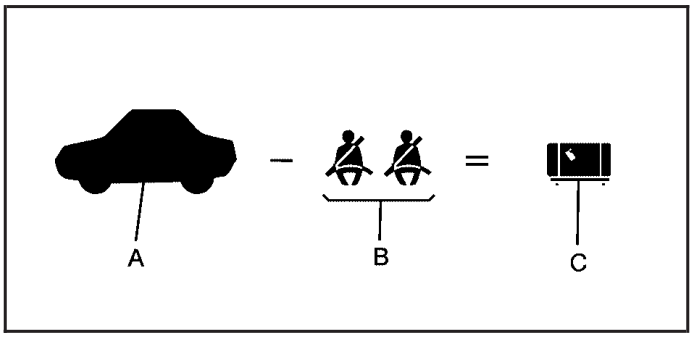

Example 2

Item	Description	Total
A	Vehicle Capacity Weight for Example 2 =	400 lbs (181 kg)
B	Subtract Occupant Weight @ 150 lbs (68 kg) x 2 =	300 lbs (136 kg)
C	Available Cargo Weight =	100 lbs (45 kg)

Downloaded from www.Manualslib.com manuals search engine

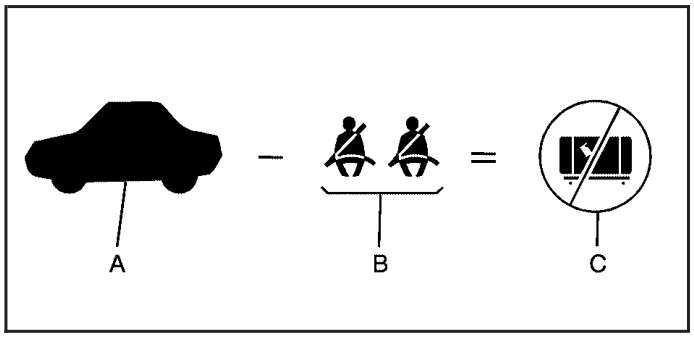

Example 3

Item	Description	Total
A	Vehicle Capacity Weight for Example 3 =	400 lbs (181 kg)
B	Subtract Occupant Weight @ 200 lbs (91 kg) x 2 =	400 lbs (181 kg)
C	Available Cargo Weight =	0 lbs (0 kg)

Refer to your vehicle's Tire and Loading Information label for specific information about your vehicle's capacity weight and seating positions. The combined weight of the driver, passengers, and cargo should never exceed your vehicle's capacity weight.

Certification Label

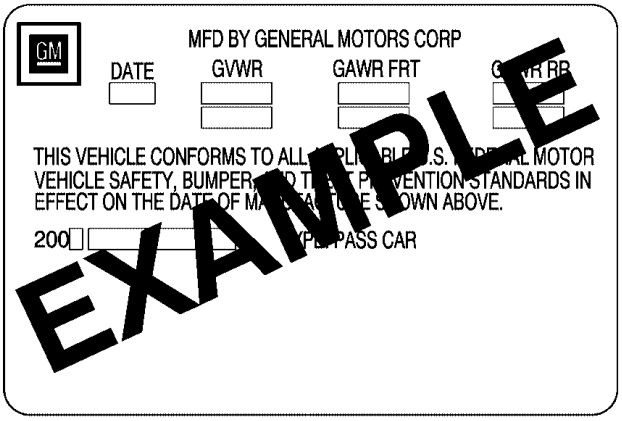

A vehicle specific Certification label is attached to the rear edge of the driver's door or the vehicle's center pillar (B-pillar) below the driver's door latch. It tells you the gross weight capacity of your vehicle, called the Gross Vehicle Weight Rating (GVWR). The GVWR includes the weight of the vehicle, all occupants, fuel and cargo. Never exceed the GVWR for your vehicle, or the Gross Axle Weight Rating (GAWR) for either the front or rear axle.

Downloaded from www.Manualslib.com manuals search engine

⚠ WARNING:

Do not load the vehicle any heavier than the Gross Vehicle Weight Rating (GVWR), or either the maximum front or rear Gross Axle Weight Rating (GAWR). If you do, parts on the vehicle can break, and it can change the way your vehicle handles. These could cause you to lose control and crash. Also, overloading can shorten the life of the vehicle.

Notice: **Overloading the vehicle may cause damage. Repairs would not be covered by the vehicle warranty. Do not overload the vehicle.**

If you put things inside your vehicle — like suitcases, tools, packages, or anything else — they will go as fast as the vehicle goes. If you have to stop or turn quickly, or if there is a crash, they will keep going.

⚠ WARNING:

Things you put inside your vehicle can strike and injure people in a sudden stop or turn, or in a crash.

- Put things in the rear area of your vehicle. Try to spread the weight evenly.
- Never stack heavier things, like suitcases, inside the vehicle so that some of them are above the tops of the seats.
- Do not leave an unsecured child restraint in your vehicle.
- When you carry something inside the vehicle, secure it whenever you can.

Downloaded from www.Manualslib.com manuals search engine

Towing

Towing Your Vehicle

To avoid damage, the disabled vehicle should be towed with all four wheels off the ground. Consult your dealer/retailer or a professional towing service if the disabled vehicle must be towed. See *Roadside Assistance Program on page 8-7*.

Recreational Vehicle Towing

Notice: **Dolly towing or dinghy towing the vehicle may cause damage because of reduced ground clearance. Always put the vehicle on a flatbed truck or trailer.**

The vehicle was neither designed nor intended to be towed with any of its wheels on the ground. If the vehicle must be towed, see “Towing Your Vehicle” earlier in this section.

Towing a Trailer

The vehicle is neither designed nor intended to tow a trailer.

Downloaded from www.Manualslib.com manuals search engine

Section 6 Service and Appearance Care

Service 6-3
Accessories and Modifications 6-3
California Proposition 65 Warning 6-4
California Perchlorate Materials Requirements 6-4
Doing Your Own Service Work 6-4
Adding Equipment to the Outside of the Vehicle 6-5

Fuel 6-5
Gasoline Octane 6-6
Gasoline Specifications 6-6
California Fuel 6-6
Additives 6-6
Fuels in Foreign Countries 6-7
Filling the Tank 6-8
Filling a Portable Fuel Container 6-10

Checking Things Under the Hood 6-10
Hood Release 6-11
Engine Compartment Overview 6-12
Engine Oil 6-15
Engine Oil Life System 6-19
Engine Air Cleaner/Filter 6-21
Automatic Transmission Fluid 6-22
Manual Transmission Fluid 6-23
Hydraulic Clutch 6-23
Cooling System 6-23
Engine Coolant 6-25
Engine Overheating 6-29
Power Steering Fluid 6-30
Windshield Washer Fluid 6-31
Brakes 6-32
Battery 6-35
Jump Starting 6-36

Rear Axle 6-40

Headlamp Aiming 6-41

Bulb Replacement 6-42
Halogen Bulbs 6-42
Headlamps 6-42
Front Turn Signal, Parking and Fog Lamps 6-43
Taillamps, Turn Signal, and Stoplamps (Base Level) 6-43
Taillamps, Turn Signal, and Stoplamps (Removable Hardtop) 6-44
Back-Up Lamps 6-44
License Plate Lamp 6-45
Replacement Bulbs 6-45

Windshield Wiper Blade Replacement 6-46

Tires 6-47
Winter Tires 6-48
Tire Sidewall Labeling 6-49
Tire Terminology and Definitions 6-51
Inflation - Tire Pressure 6-54

Downloaded from www.Manualslib.com manuals search engine

Section 6 Service and Appearance Care

Tire Pressure Monitor System 6-55
Tire Pressure Monitor Operation 6-56
Tire Inspection and Rotation 6-61
When It Is Time for New Tires 6-63
Buying New Tires 6-64
Different Size Tires and Wheels 6-65
Uniform Tire Quality Grading 6-66
Wheel Alignment and Tire Balance 6-67
Wheel Replacement 6-67
Tire Chains 6-70
If a Tire Goes Flat 6-70
Tire Sealant and Compressor Kit (Without Selector Switch) 6-71
Tire Sealant and Compressor Kit (With Selector Switch) 6-80
Tire Sealant and Compressor Kit Storage 6-89

Appearance Care 6-90
Interior Cleaning 6-90
Fabric/Carpet 6-91
Leather 6-92
Instrument Panel, Vinyl, and Other Plastic Surfaces 6-92
Care of Safety Belts 6-93
Weatherstrips 6-93
Washing Your Vehicle 6-93
Cleaning Exterior Lamps/Lenses 6-94
Finish Care 6-94
Windshield and Wiper Blades 6-95
Convertible Top 6-95
Aluminum or Chrome-Plated Wheels and Trim 6-96
Tires 6-96
Sheet Metal Damage 6-97
Finish Damage 6-97
Underbody Maintenance 6-97
Chemical Paint Spotting 6-97

Vehicle Identification 6-98
Vehicle Identification Number (VIN) 6-98
Service Parts Identification Label 6-98

Electrical System 6-98
Add-On Electrical Equipment 6-98
Headlamp Wiring 6-99
Power Windows and Other Power Options 6-99
Fuses and Circuit Breakers 6-99
Floor Console Fuse Block 6-99
Underhood Fuse Block 6-101

Capacities and Specifications 6-104

Downloaded from www.Manualslib.com manuals search engine

Service

For service and parts needs, visit your dealer/retailer. You will receive genuine GM parts and GM-trained and supported service people.

Genuine GM parts have one of these marks:

Accessories and Modifications

When non-dealer/non-retailer accessories are added to the vehicle, they can affect vehicle performance and safety, including such things as airbags, braking, stability, ride and handling, emissions systems, aerodynamics, durability, and electronic systems like antilock brakes, traction control, and stability control. Some of these accessories could even cause malfunction or damage not covered by the vehicle warranty.

Damage to vehicle components resulting from the installation or use of non-GM certified parts, including control module modifications, is not covered under the terms of the vehicle warranty and may affect remaining warranty coverage for affected parts.

GM Accessories are designed to complement and function with other systems on the vehicle. Your GM dealer/retailer can accessorize the vehicle using genuine GM Accessories. When you go to your GM dealer/retailer and ask for GM Accessories, you will know that GM-trained and supported service technicians will perform the work using genuine GM Accessories.

Also, see *Adding Equipment to Your Airbag-Equipped Vehicle on page 2-48*.

Downloaded from www.Manualslib.com manuals search engine

California Proposition 65 Warning

Most motor vehicles, including this one, contain and/or emit chemicals known to the State of California to cause cancer and birth defects or other reproductive harm. Engine exhaust, many parts and systems, many fluids, and some component wear by-products contain and/or emit these chemicals.

California Perchlorate Materials Requirements

Certain types of automotive applications, such as airbag initiators, seat belt pretensioners, and lithium batteries contained in remote keyless transmitters, may contain perchlorate materials. Special handling may be necessary. For additional information, see www.dtsc.ca.gov/hazardouswaste/perchlorate.

Doing Your Own Service Work

⚠ WARNING:

You can be injured and the vehicle could be damaged if you try to do service work on a vehicle without knowing enough about it.

- Be sure you have sufficient knowledge, experience, the proper replacement parts, and tools before attempting any vehicle maintenance task.
- Be sure to use the proper nuts, bolts, and other fasteners. English and metric fasteners can be easily confused. If the wrong fasteners are used, parts can later break or fall off. You could be hurt.

If doing some of your own service work, use the proper service manual. It tells you much more about how to service the vehicle than this manual can. To order the proper service manual, see *Service Publications Ordering Information on page 8-17*.

Downloaded from www.Manualslib.com manuals search engine

This vehicle has an airbag system. Before attempting to do your own service work, see *Servicing Your Airbag-Equipped Vehicle on page 2-48*.

Keep a record with all parts receipts and list the mileage and the date of any service work performed. See *Maintenance Record on page 7-14*.

Adding Equipment to the Outside of the Vehicle

Things added to the outside of the vehicle can affect the airflow around it. This can cause wind noise and can affect fuel economy and windshield washer performance. Check with your dealer/retailer before adding equipment to the outside of the vehicle.

Fuel

Use of the recommended fuel is an important part of the proper maintenance of this vehicle. To help keep the engine clean and maintain optimum vehicle performance, we recommend the use of gasoline advertised as TOP TIER Detergent Gasoline.

Look for the TOP TIER label on the fuel pump to ensure gasoline meets enhanced detergency standards developed by auto companies. A list of marketers providing TOP TIER Detergent Gasoline can be found at www.toptiergas.com.

TOP TIER™
Detergent Gasoline

CATÉGORIE SUPERIÉURE™
Essences Détergentes

Downloaded from www.Manualslib.com manuals search engine

Gasoline Octane

Use premium unleaded gasoline with a posted octane rating of 91 or higher. You can also use regular unleaded gasoline rated at 87 octane or higher, but the vehicle's acceleration could be slightly reduced, and a slight audible knocking noise, commonly referred to as spark knock, might be heard. If the octane is less than 87, you might notice a heavy knocking noise when you drive. If this occurs, use a gasoline rated at 87 octane or higher as soon as possible. Otherwise, you could damage the engine. If heavy knocking is heard when using gasoline rated at 87 octane or higher, the engine needs service.

Gasoline Specifications

At a minimum, gasoline should meet ASTM specification D 4814 in the United States or CAN/CGSB-3.5 or 3.511 in Canada. Some gasolines contain an octane-enhancing additive called methylcyclopentadienyl manganese tricarbonyl (MMT). We recommend against the use of gasolines containing MMT. See *Additives on page 6-6* for additional information.

California Fuel

If the vehicle is certified to meet California Emissions Standards, it is designed to operate on fuels that meet California specifications. See the underhood emission control label. If this fuel is not available in states adopting California emissions standards, the vehicle will operate satisfactorily on fuels meeting federal specifications, but emission control system performance might be affected. The malfunction indicator lamp could turn on and the vehicle might fail a smog-check test. See *Malfunction Indicator Lamp on page 4-27*. If this occurs, return to your authorized dealer/retailer for diagnosis. If it is determined that the condition is caused by the type of fuel used, repairs might not be covered by the vehicle warranty.

Additives

To provide cleaner air, all gasolines in the United States are now required to contain additives that help prevent engine and fuel system deposits from forming, allowing the emission control system to work properly. In most cases, nothing should have to be added to the fuel. However, some gasolines contain only the minimum amount of additive required to meet U.S. Environmental Protection Agency regulations. To help keep fuel injectors and intake valves clean, or if the vehicle experiences problems due to dirty injectors or valves, look for gasoline that is advertised as TOP TIER Detergent Gasoline.

Downloaded from www.Manualslib.com manuals search engine

For customers who do not use TOP TIER Detergent Gasoline regularly, one bottle of GM Fuel System Treatment PLUS, added to the fuel tank at every engine oil change, can help clean deposits from fuel injectors and intake valves. GM Fuel System Treatment PLUS is the only gasoline additive recommended by General Motors.

Also, your dealer/retailer has additives that will help correct and prevent most deposit-related problems.

Gasolines containing oxygenates, such as ethers and ethanol, and reformulated gasolines might be available in your area. We recommend that you use these gasolines, if they comply with the specifications described earlier. However, E85 (85% ethanol) and other fuels containing more than 10% ethanol must not be used in vehicles that were not designed for those fuels.

Notice: **This vehicle was not designed for fuel that contains methanol. Do not use fuel containing methanol. It can corrode metal parts in the fuel system and also damage plastic and rubber parts. That damage would not be covered under the vehicle warranty.**

Some gasolines that are not reformulated for low emissions can contain an octane-enhancing additive called methylcyclopentadienyl manganese tricarbonyl (MMT); ask the attendant where you buy gasoline whether the fuel contains MMT. We recommend against the use of such gasolines. Fuels containing MMT can reduce the life of spark plugs and the performance of the emission control system could be affected. The malfunction indicator lamp might turn on. If this occurs, return to your dealer/retailer for service.

Fuels in Foreign Countries

If you plan on driving in another country outside the United States or Canada, the proper fuel might be hard to find. Never use leaded gasoline or any other fuel not recommended in the previous text on fuel. Costly repairs caused by use of improper fuel would not be covered by the vehicle warranty.

To check the fuel availability, ask an auto club, or contact a major oil company that does business in the country where you will be driving.

Downloaded from www.Manualslib.com manuals search engine

Filling the Tank

⚠ WARNING:

Fuel vapor burns violently and a fuel fire can cause bad injuries. To help avoid injuries to you and others, read and follow all the instructions on the fuel pump island. Turn off the engine when refueling. Do not smoke near fuel or when refueling the vehicle. Do not use cellular phones. Keep sparks, flames, and smoking materials away from fuel. Do not leave the fuel pump unattended when refueling the vehicle. This is against the law in some places. Do not re-enter the vehicle while pumping fuel. Keep children away from the fuel pump; never let children pump fuel.

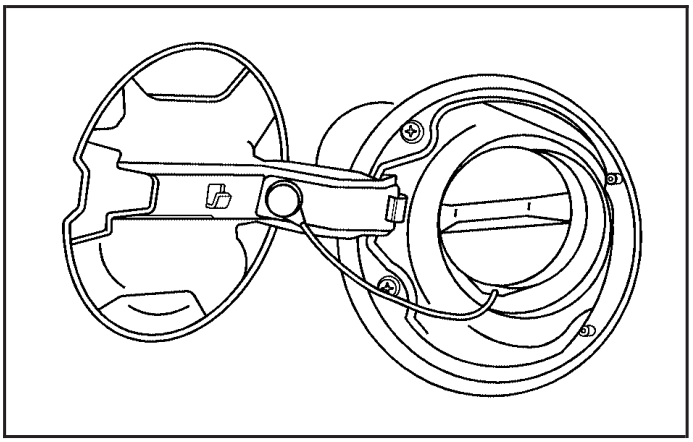

The tethered fuel cap is located behind a hinged fuel door on the driver side of the vehicle.

To remove the fuel cap, turn it slowly counterclockwise.

While refueling, hang the tethered fuel cap from the hook on the fuel door.

Downloaded from www.Manualslib.com manuals search engine

⚠ WARNING:

Fuel can spray out on you if you open the fuel cap too quickly. If you spill fuel and then something ignites it, you could be badly burned. This spray can happen if the tank is nearly full, and is more likely in hot weather. Open the fuel cap slowly and wait for any hiss noise to stop. Then unscrew the cap all the way.

Be careful not to spill fuel. Do not top off or overfill the tank and wait a few seconds after you have finished pumping before removing the nozzle. Clean fuel from painted surfaces as soon as possible. See *Washing Your Vehicle on page 6-93*.

When replacing the fuel cap, turn it clockwise until it clicks. Make sure the cap is fully installed. The diagnostic system can determine if the fuel cap has been left off or improperly installed. This would allow fuel to evaporate into the atmosphere. See *Malfunction Indicator Lamp on page 4-27*.

The vehicle has a Driver Information Center (DIC). The CHECK GAS CAP message displays if the fuel cap is not properly installed. See *DIC Warnings and Messages on page 4-36* for more information.

⚠ WARNING:

If a fire starts while you are refueling, do not remove the nozzle. Shut off the flow of fuel by shutting off the pump or by notifying the station attendant. Leave the area immediately.

Notice: **If you need a new fuel cap, be sure to get the right type. Your dealer/retailer can get one for you. If you get the wrong type, it may not fit properly. This may cause the malfunction indicator lamp to light and may damage the fuel tank and emissions system. See *Malfunction Indicator Lamp on page 4-27*.**

Downloaded from www.Manualslib.com manuals search engine

Filling a Portable Fuel Container

⚠ WARNING:

Never fill a portable fuel container while it is in the vehicle. Static electricity discharge from the container can ignite the fuel vapor. You can be badly burned and the vehicle damaged if this occurs. To help avoid injury to you and others:

- Dispense fuel only into approved containers.
- Do not fill a container while it is inside a vehicle, in a vehicle's trunk, pickup bed, or on any surface other than the ground.
- Bring the fill nozzle in contact with the inside of the fill opening before operating the nozzle. Contact should be maintained until the filling is complete.
- Do not smoke while pumping fuel.
- Do not use a cellular phone while pumping fuel.

Checking Things Under the Hood

⚠ WARNING:

An electric fan under the hood can start up and injure you even when the engine is not running. Keep hands, clothing, and tools away from any underhood electric fan.

⚠ WARNING:

Things that burn can get on hot engine parts and start a fire. These include liquids like fuel, oil, coolant, brake fluid, windshield washer and other fluids, and plastic or rubber. You or others could be burned. Be careful not to drop or spill things that will burn onto a hot engine.

Downloaded from www.Manualslib.com manuals search engine

Hood Release

To open the hood, do the following:

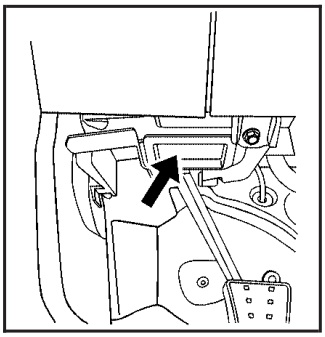

1. Locate the interior hood release lever. It is located below the instrument panel on the driver's side of the vehicle.

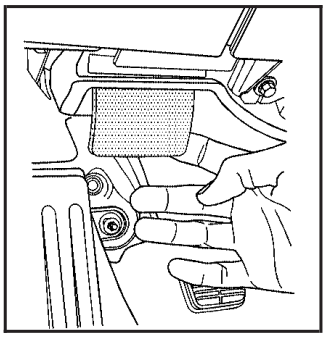

2. Pull down on the rear edge of the lever to release the hood latch.

3. Go to the side of the vehicle and pull up on the rear edge of the hood, near the windshield to open the hood.

Notice: **Closing the hood with the doors open may damage the hood and/or doors. Always close the doors before closing the hood.**

Before closing the hood, be sure all the filler caps are on properly. Then, pull the hood down and close it firmly.

Downloaded from www.Manualslib.com manuals search engine

Engine Compartment Overview

When you open the hood on the 2.4L L4 engine, this is what you will see:

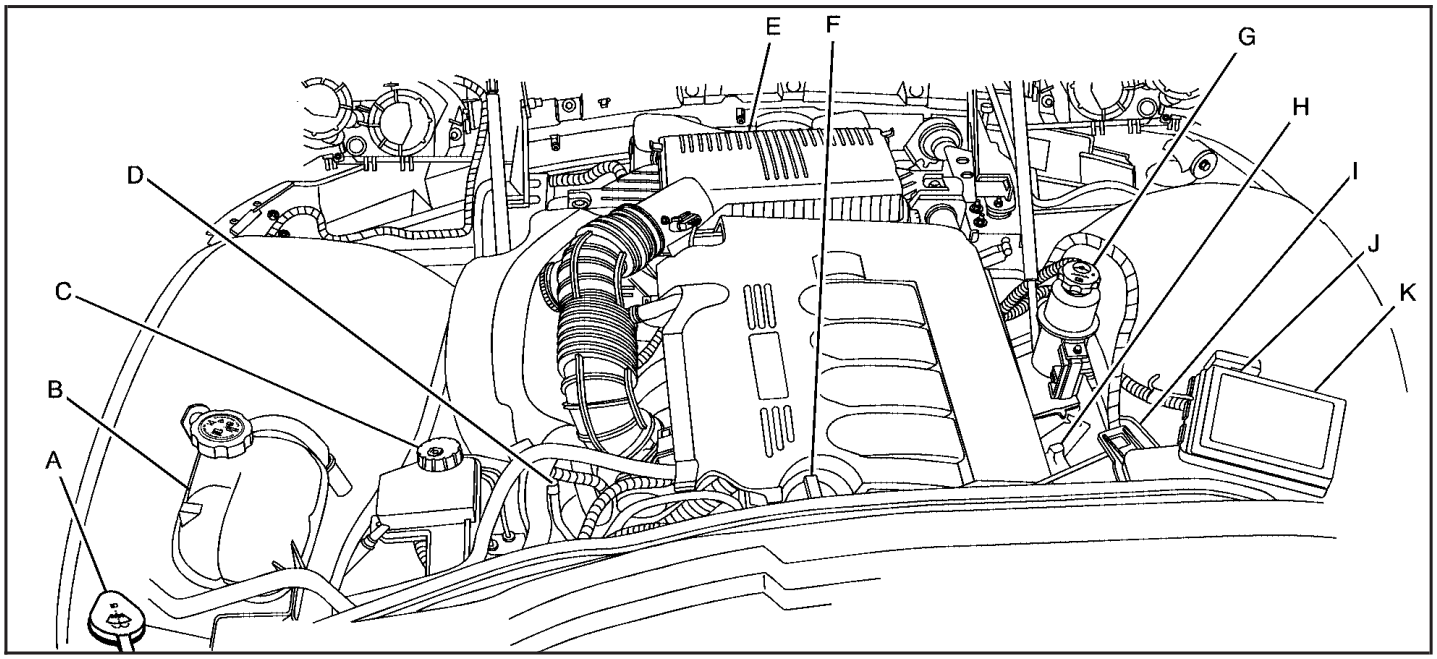

Downloaded from www.Manualslib.com manuals search engine

A. Windshield Washer Fluid Reservoir. See “Adding Washer Fluid” under *Windshield Washer Fluid on page 6-31*.

B. Coolant Surge Tank and Pressure Cap. See *Cooling System on page 6-23*.

C. Brake Master Cylinder Reservoir. See “Brake Fluid” under *Brakes on page 6-32* and *Hydraulic Clutch on page 6-23*.

D. Engine Oil Dipstick (Out of View). See “Checking Engine Oil” under *Engine Oil on page 6-15*.

E. *Engine Air Cleaner/Filter on page 6-21*.

F. Engine Oil Fill Cap. See “When to Add Engine Oil” under *Engine Oil on page 6-15*.

G. Power Steering Fluid Reservoir. See *Power Steering Fluid on page 6-30*.

H. Remote Negative (–) Ground (Out of View). See *Jump Starting on page 6-36*.

I. *Battery on page 6-35* (Out of View).

J. Remote Positive (+) Terminal. See *Jump Starting on page 6-36*.

K. *Underhood Fuse Block on page 6-101*.

Downloaded from www.Manualslib.com manuals search engine

When you open the hood on the 2.0L L4 engine, this is what you will see:

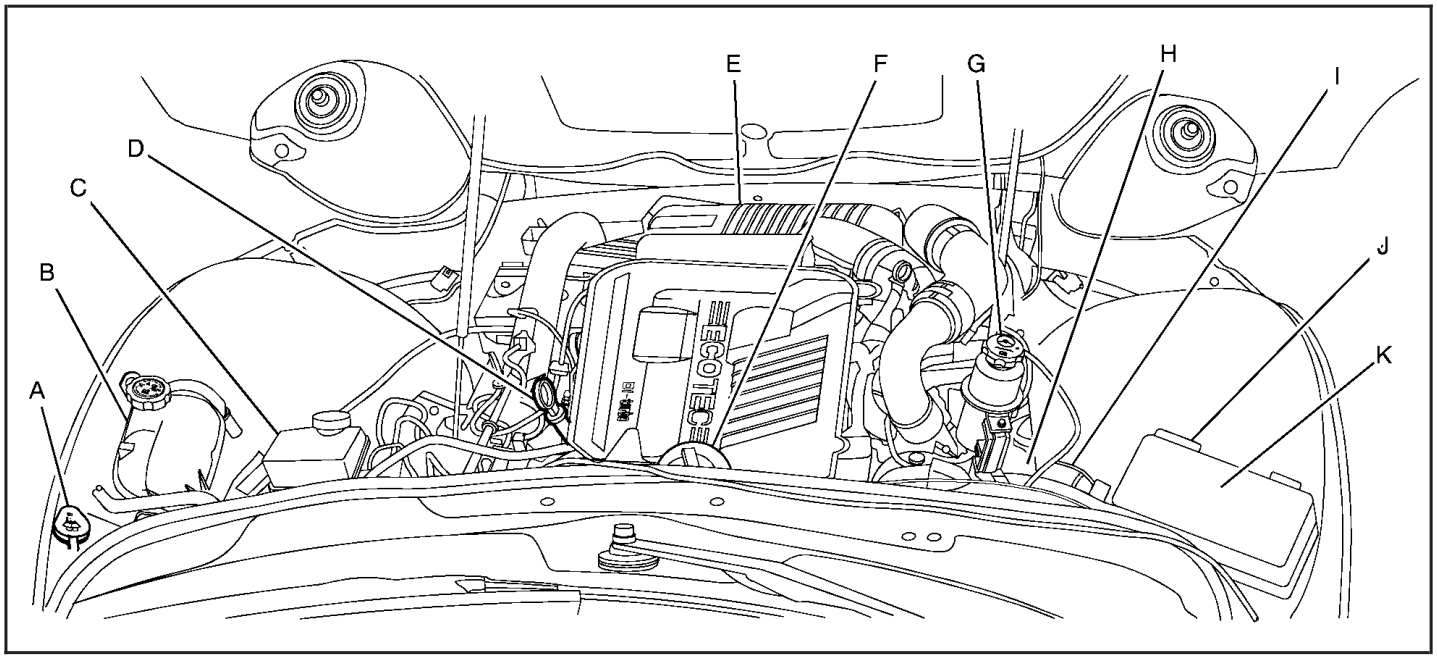

Downloaded from www.Manualslib.com manuals search engine

A. Windshield Washer Fluid Reservoir. See “Adding Washer Fluid” under *Windshield Washer Fluid on page 6-31*.

B. Coolant Surge Tank and Pressure Cap. See *Cooling System on page 6-23*.

C. Brake Master Cylinder Reservoir. See “Brake Fluid” under *Brakes on page 6-32* and *Hydraulic Clutch on page 6-23*.

D. Engine Oil Dipstick. See “Checking Engine Oil” under *Engine Oil on page 6-15*.

E. *Engine Air Cleaner/Filter on page 6-21*.

F. Engine Oil Fill Cap. See “When to Add Engine Oil” under *Engine Oil on page 6-15*.

G. Power Steering Fluid Reservoir. See *Power Steering Fluid on page 6-30*.

H. Remote Negative (–) Ground (Out of View). See *Jump Starting on page 6-36*.

I. *Battery on page 6-35* (Out of View).

J. Remote Positive (+) Terminal. See *Jump Starting on page 6-36*.

K. *Underhood Fuse Block on page 6-101*.

Engine Oil

Checking Engine Oil

It is a good idea to check the engine oil level at each fuel fill. In order to get an accurate reading, the oil must be warm and the vehicle must be on level ground.

The engine oil dipstick handle is a yellow loop. See *Engine Compartment Overview on page 6-12* for the location of the engine oil dipstick.

1. Turn off the engine and give the oil several minutes to drain back into the oil pan. If this is not done, the oil dipstick might not show the actual level.
2. Pull the dipstick and clean it with a paper towel or cloth, then push it back in all the way. Remove it again, keeping the tip down and check the level.

Downloaded from www.Manualslib.com manuals search engine

When to Add Engine Oil

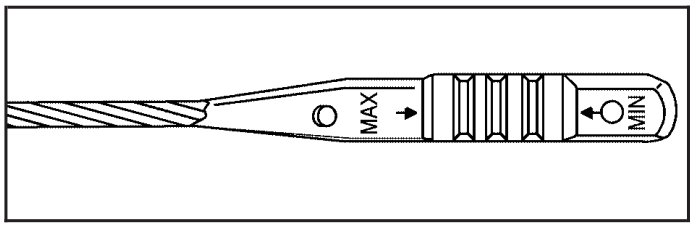

If the oil is below the MIN (minimum) mark, add at least one quart/liter of the recommended oil. This section explains what kind of oil to use. For engine oil crankcase capacity, see *Capacities and Specifications on page 6-104*.

Notice: **Do not add too much oil. If the engine has so much oil that the oil level gets above the upper mark that shows the proper operating range, the engine could be damaged.**

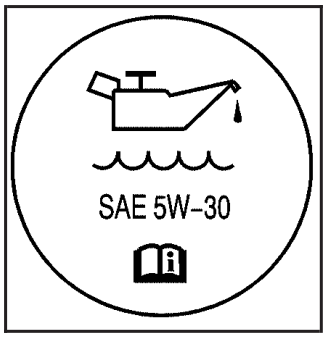

2.4L L4 Engine

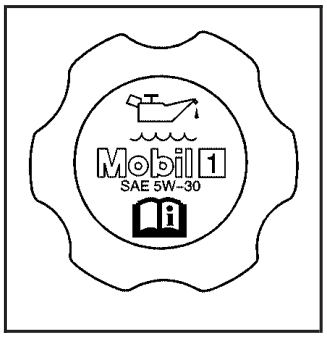

2.0L L4 Engine

See *Engine Compartment Overview on page 6-12* for the location of the engine oil fill cap.

Add enough oil to put the level somewhere in the proper operating range. Push the dipstick all the way back in when through.

Downloaded from www.Manualslib.com manuals search engine

What Kind of Engine Oil to Use

For Vehicles With the 2.0L L4 Engine

Look for three things:

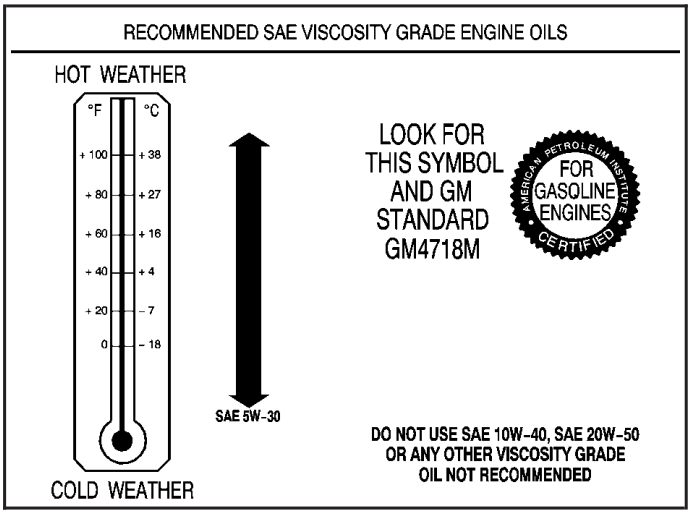

- GM4718M

  This vehicle's engine requires a special oil meeting GM Standard GM4718M, such as Mobil 1® or equivalent. Oils meeting this standard may be identified as synthetic. However, not all synthetic oils will meet this GM standard. Use only an oil that meets GM Standard GM4718M.

Notice: **Using oils that do not have the GM4718M Standard designation can cause engine damage not covered by the vehicle warranty.**

- SAE 5W-30

  SAE 5W-30 is best for the vehicle. These numbers on an oil container show its viscosity, or thickness. Do not use other viscosity oils such as SAE 20W-50.

- American Petroleum Institute (API) starburst symbol

Oils meeting these requirements should have the starburst symbol on the container. This symbol indicates that the oil has been certified by the American Petroleum Institute (API).

This vehicle's engine was filled at the factory with a synthetic oil meeting all requirements for this vehicle.

Substitute Engine Oil: When adding oil to maintain engine oil level, oil meeting GM Standard GM4718M might not be available. You can add substitute oil designated SAE 5W-30 with the starburst symbol at all temperatures. Substitute oil not meeting GM Standard GM4718M should not be used for an oil change.

Downloaded from www.Manualslib.com manuals search engine

For Vehicles With the 2.4L L4 Engine

Look for three things:

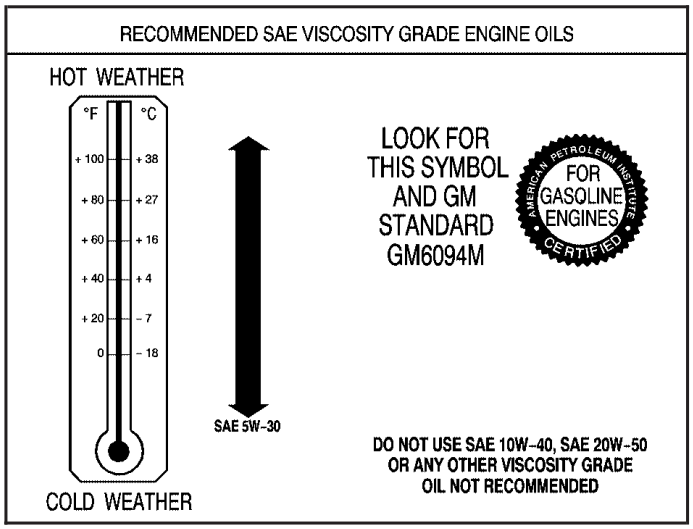

- GM6094M

  Use only an oil that meets GM Standard GM6094M.

- SAE 5W-30

  SAE 5W-30 is best for the vehicle. These numbers on an oil container show its viscosity, or thickness. Do not use other viscosity oils such as SAE 20W-50.

- American Petroleum Institute (API) starburst symbol

Oils meeting these requirements should have the starburst symbol on the container. This symbol indicates that the oil has been certified by the American Petroleum Institute (API).

Notice: **Use only engine oil identified as meeting GM Standard GM6094M and showing the American Petroleum Institute Certified For Gasoline Engines starburst symbol. Failure to use the recommended oil can result in engine damage not covered by the vehicle warranty.**

Downloaded from www.Manualslib.com manuals search engine

Cold Temperature Operation

For Vehicles With the 2.4L L4 Engine

If in an area of extreme cold, where the temperature falls below –20°F (–29°C), use either an SAE 5W-30 synthetic oil or an SAE 0W-30 engine oil. Both provide easier cold starting for the engine at extremely low temperatures. Always use an oil that meets the required specification, GM6094M. See “What Kind of Engine Oil to Use” for more information.

Engine Oil Additives / Engine Oil Flushes

Do not add anything to the oil. The recommended oils with the starburst symbol that meet GM Standard GM6094M are all that is needed for good performance and engine protection.

Engine oil system flushes are not recommended and could cause engine damage not covered by the vehicle warranty.

Engine Oil Life System

When to Change Engine Oil

This vehicle has the Engine Oil Life System, a computer system that indicates when to change the engine oil and filter. This is based on engine revolutions and engine temperature, and not on mileage. Based on driving conditions, the mileage at which an oil change is indicated can vary considerably. For the oil life system to work properly, the system must be reset every time the oil is changed.

When the system has calculated that oil life has been diminished, it indicates that an oil change is necessary. A CHANGE OIL SOON message comes on. See *DIC Warnings and Messages on page 4-36*. Change the oil as soon as possible within the next 600 miles (1 000 km). It is possible that, if driving under the best conditions, the oil life system might not indicate that an oil change is necessary for over a year. However, the engine oil and filter must be changed at least once a year and at this time the system must be reset. Your dealer/retailer has trained service people who will perform this work using genuine parts and reset the system. It is also important to check the oil regularly and keep it at the proper level.

If the system is ever reset accidentally, the oil must be changed at 3,000 miles (5 000 km) since the last oil change. Remember to reset the oil life system whenever the oil is changed.

Downloaded from www.Manualslib.com manuals search engine

How to Reset the Engine Oil Life System

The Engine Oil Life System calculates when to change your engine oil and filter based on vehicle use. Whenever the oil is changed, reset the system so it can calculate when the next oil change is required. If a situation occurs where the oil is changed prior to a CHANGE OIL SOON message being turned on, reset the system.

After changing the engine oil, the system must be reset:

1. Turn the ignition to ON/RUN, with the engine off.
2. Press the information and reset buttons on the Driver Information Center (DIC) at the same time to enter the personalization menu. See *DIC Vehicle Personalization on page 4-40*.
3. Press the information button to scroll through the available personalization menu modes until the DIC display shows OIL-LIFE RESET.
4. Press and hold the reset button until the DIC display shows ACKNOWLEDGED. This will tell you the system has been reset.
5. Turn the key to LOCK/OFF.

If the CHANGE OIL SOON message comes back on when the vehicle is started, the engine oil life system has not reset. Repeat the reset procedure.

What to Do with Used Oil

Used engine oil contains certain elements that can be unhealthy for your skin and could even cause cancer. Do not let used oil stay on your skin for very long. Clean your skin and nails with soap and water, or a good hand cleaner. Wash or properly dispose of clothing or rags containing used engine oil. See the manufacturer's warnings about the use and disposal of oil products.

Used oil can be a threat to the environment. If you change your own oil, be sure to drain all the oil from the filter before disposal. Never dispose of oil by putting it in the trash, pouring it on the ground, into sewers, or into streams or bodies of water. Recycle it by taking it to a place that collects used oil.

Downloaded from www.Manualslib.com manuals search engine

Engine Air Cleaner/Filter

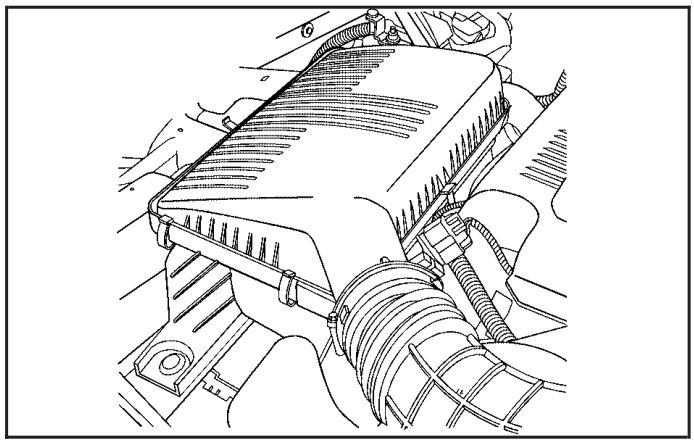

2.4L L4 Engine

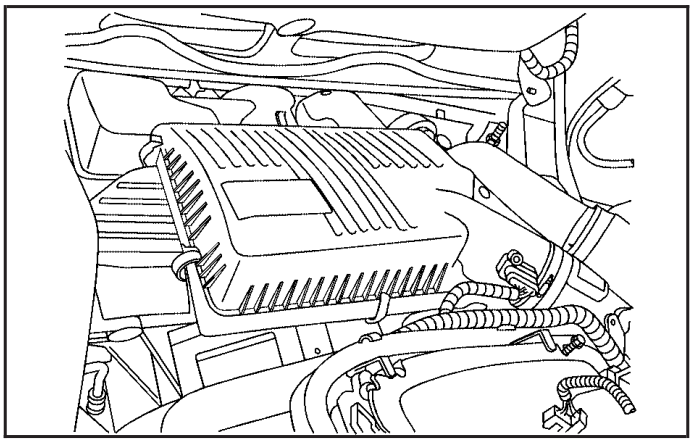

2.0L L4 Engine

See *Engine Compartment Overview on page 6-12* for the location of the engine air cleaner/filter.

When to Inspect the Engine Air Cleaner/Filter

Inspect the air cleaner/filter element at each scheduled Maintenance II service interval and replace the air cleaner/filter element at the first oil change after 50,000 miles (80 000 km). If you are driving in dusty/dirty conditions, inspect the filter at each engine oil change.

Downloaded from www.Manualslib.com manuals search engine

How to Inspect the Engine Air Cleaner/Filter

To inspect the air cleaner/filter remove the filter from the vehicle and lightly shake the filter to release loose dust and dirt. If the filter remains caked with dirt, a new filter is required.

To inspect or replace the filter, open the clamps that hold the cover on and lift off the cover. Be sure to reinstall the cover tightly.

⚠ WARNING:

Operating the engine with the air cleaner/filter off can cause you or others to be burned. The air cleaner not only cleans the air; it helps to stop flames if the engine backfires. If it is not there and the engine backfires, you could be burned. Do not drive with it off, and be careful working on the engine with the air cleaner/filter off.

Notice: **If the air cleaner/filter is off, a backfire can cause a damaging engine fire. And, dirt can easily get into the engine, which will damage it. Always have the air cleaner/filter in place when you are driving.**

Automatic Transmission Fluid

It is not necessary to check the transmission fluid level. A transmission fluid leak is the only reason for fluid loss. If a leak occurs, take your vehicle to a dealer/retailer and have it repaired as soon as possible.

Change the fluid and filter at the intervals listed in the Maintenance Schedule. See *Scheduled Maintenance on page 7-3*. Be sure to use the transmission fluid listed in *Recommended Fluids and Lubricants on page 7-10*.

Notice: **Use of the incorrect automatic transmission fluid may damage the vehicle, and the damages may not be covered by the vehicle's warranty. Always use the automatic transmission fluid listed in *Recommended Fluids and Lubricants on page 7-10*.**

Downloaded from www.Manualslib.com manuals search engine

Manual Transmission Fluid

It is not necessary to check the manual transmission fluid level. A transmission fluid leak is the only reason for fluid loss. If a leak occurs, take the vehicle to a dealer/retailer for service. Have it repaired as soon as possible. You may also have the fluid level checked by your dealer/retailer when the oil is changed. See *Recommended Fluids and Lubricants on page 7-10* for the proper fluid to use.

Hydraulic Clutch

The hydraulic clutch linkage in your vehicle is self-adjusting. This system does not have its own reservoir. It receives fluid from the brake master cylinder reservoir.

See *Brakes on page 6-32* for more information.

Cooling System

The Cooling System allows the engine to maintain the correct working temperature.

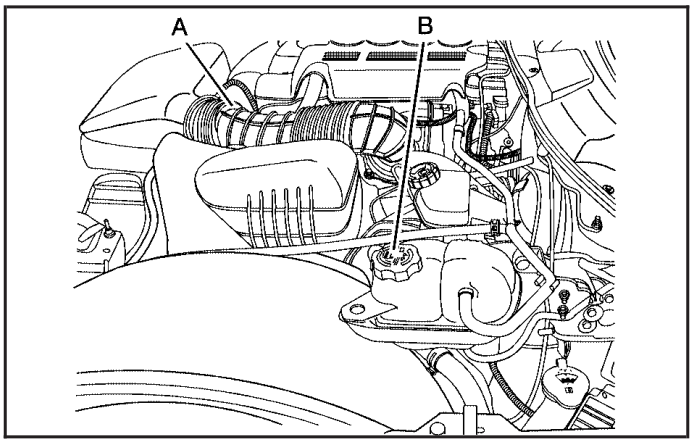

2.4 L4 Engine

A. Electric Engine Cooling Fan (Out of View)
B. Coolant Surge Tank and Pressure Cap

Downloaded from www.Manualslib.com manuals search engine

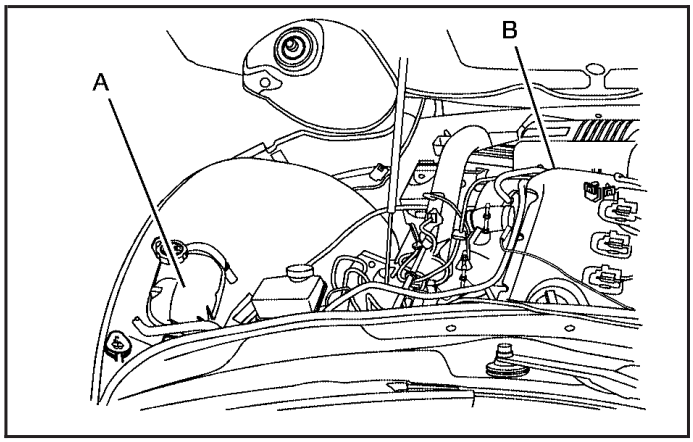

2.0L L4 Engine

A. Coolant Surge Tank and Pressure Cap
B. Electric Engine Cooling Fan (Out of View)

⚠ WARNING:

An electric engine cooling fan under the hood can start up even when the engine is not running and can cause injury. Keep hands, clothing, and tools away from any underhood electric fan.

⚠ WARNING:

Heater and radiator hoses, and other engine parts, can be very hot. Do not touch them. If you do, you can be burned.

Do not run the engine if there is a leak. If you run the engine, it could lose all coolant. That could cause an engine fire, and you could be burned. Get any leak fixed before you drive the vehicle.

Notice: **Using coolant other than DEX-COOL® can cause premature engine, heater core, or radiator corrosion. In addition, the engine coolant could require changing sooner, at 50 000 km (30,000 miles) or 24 months, whichever occurs first. Any repairs would not be covered by the vehicle warranty. Always use DEX-COOL® (silicate-free) coolant in the vehicle.**

Downloaded from www.Manualslib.com manuals search engine

Engine Coolant

The cooling system in the vehicle is filled with DEX-COOL® engine coolant. This coolant is designed to remain in the vehicle for five years or 150,000 miles (240 000 km), whichever occurs first.

The following explains the cooling system and how to check and add coolant when it is low. If there is a problem with engine overheating, see *Engine Overheating on page 6-29*

What to Use

⚠ WARNING:

Adding only plain water to the cooling system can be dangerous. Plain water, or some other liquid such as alcohol, can boil before the proper coolant mixture will. The vehicle's coolant warning system is set for the proper coolant mixture. With plain water or the wrong mixture, the engine could get too hot but you would not get the overheat warning. The engine could catch fire and you or others could be burned. Use a 50/50 mixture of clean, drinkable water and DEX-COOL® coolant.

Use a 50/50 mixture of clean, drinkable water and DEX-COOL® coolant. If using this mixture, nothing else needs to be added. This mixture:

- Gives freezing protection down to –34°F (–37°C), outside temperature.
- Gives boiling protection up to 265°F (129°C), engine temperature.
- Protects against rust and corrosion.
- Will not damage aluminum parts.
- Helps keep the proper engine temperature.

Notice: **If an improper coolant mixture is used, the engine could overheat and be badly damaged. The repair cost would not be covered by the vehicle warranty. Too much water in the mixture can freeze and crack the engine, radiator, heater core, and other parts.**

Notice: **If extra inhibitors and/or additives are used in the vehicle's cooling system, the vehicle could be damaged. Use only the proper mixture of the engine coolant listed in this manual for the cooling system. See *Recommended Fluids and Lubricants on page 7-10* for more information.**

Downloaded from www.Manualslib.com manuals search engine

Checking Coolant

The vehicle must be on a level surface when checking the coolant level.

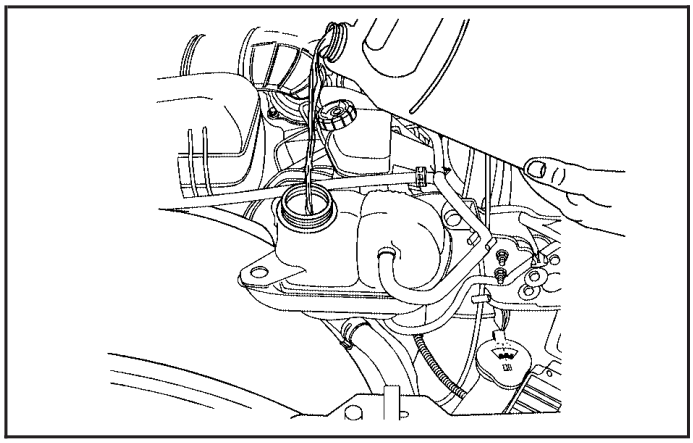

The coolant surge tank is located in the engine compartment on the driver's side of the vehicle. See *Engine Compartment Overview on page 6-12* for more information on location.

Check to see if coolant is visible in the coolant surge tank. If the coolant inside the coolant surge tank is boiling, do not do anything else until it cools down. If coolant is visible but the coolant level is not at or above the FULL COLD mark, add a 50/50 mixture of clean, drinkable water and DEX-COOL® coolant at the coolant surge tank, but be sure the cooling system is cool before this is done. See Engine Coolant Engine Coolant for more information.

The vehicle must be on a level surface. When your engine is cold, the coolant level should be at the COLD FILL line.

Do not overfill the surge tank. Too much coolant can result in an overflow condition when the fluid is hot.

How to Add Coolant to the Surge Tank

⚠ WARNING:

You can be burned if you spill coolant on hot engine parts. Coolant contains ethylene glycol and it will burn if the engine parts are hot enough. Do not spill coolant on a hot engine.

Notice: **This vehicle has a specific coolant fill procedure. Failure to follow this procedure could cause the engine to overheat and be severely damaged.**

Downloaded from www.Manualslib.com manuals search engine

⚠ WARNING:

An electric engine cooling fan under the hood can start up even when the engine is not running and can cause injury. Keep hands, clothing, and tools away from any underhood electric fan.

⚠ WARNING:

Steam and scalding liquids from a hot cooling system can blow out and burn you badly. They are under pressure, and if you turn the surge tank pressure cap — even a little — they can come out at high speed. Never turn the cap when the cooling system, including the surge tank pressure cap, is hot. Wait for the cooling system and surge tank pressure cap to cool if you ever have to turn the pressure cap.

If coolant is needed, add the proper DEX-COOL® coolant mixture at the coolant surge tank.

1. Remove the coolant surge tank pressure cap when the cooling system, including the coolant surge tank pressure cap and upper radiator hose, is no longer hot. Turn the pressure cap slowly counterclockwise about two or two and one-half turns. If you hear a hiss, wait for that to stop. This will allow any pressure still left to be vented out the discharge hose.

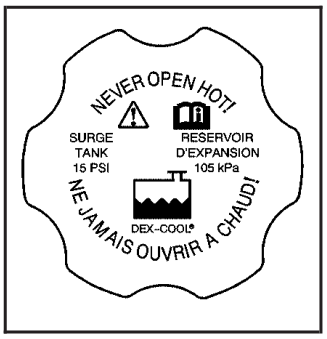

2. Then keep turning the pressure cap slowly, and remove it.

Downloaded from www.Manualslib.com manuals search engine

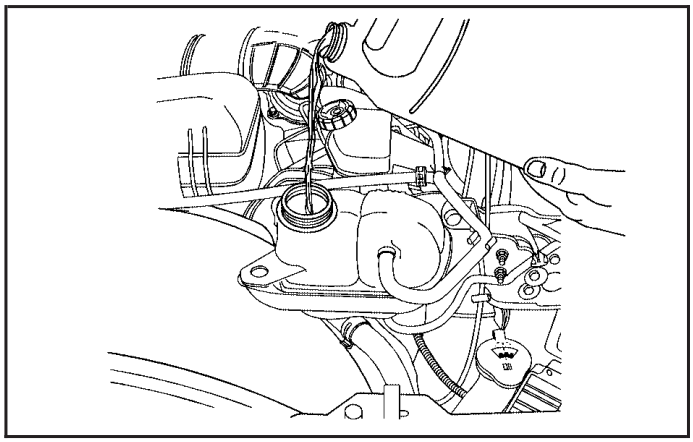

3. Fill the coolant surge tank with the proper mixture, to the COLD FILL line. Wait about five minutes, then check to see if the level is below the COLD FILL line. If the level is below the line, add additional coolant to bring the level up to the line. Repeat this procedure until the level remains constant at the COLD FILL line for at least five minutes.

4. With the coolant surge tank pressure cap off, start the engine and let it run until you can feel the upper radiator hose getting hot. Watch out for the engine cooling fan.

   By this time, the coolant level inside the coolant surge tank may be lower. If the level is lower than the COLD FILL line, add more of the proper mixture to the coolant surge tank until the level reaches the COLD FILL line.

5. Then replace the pressure cap. Be sure the pressure cap is hand-tight and fully seated.

Notice: **If the pressure cap is not tightly installed, coolant loss and possible engine damage may occur. Be sure the cap is properly and tightly secured.**

See your dealer/retailer, if necessary.

Downloaded from www.Manualslib.com manuals search engine

Engine Overheating

The vehicle has an indicator to warn of engine overheating.

There is an engine coolant temperature warning light on your vehicle's instrument panel. See *Engine Coolant Temperature Warning Light on page 4-26* for more information.

You may decide not to lift the hood when this warning appears, but instead get service help right away. See *Roadside Assistance Program on page 8-7*.

If you do decide to lift the hood, make sure the vehicle is parked on a level surface.

Then check to see if the engine cooling fan is running. If the engine is overheating, the fan should be running. If not, do not continue to run the engine and have the vehicle serviced.

Notice: **Engine damage from running the engine without coolant is not covered by the warranty.**

Notice: **If the engine catches fire because of being driven with no coolant, your vehicle can be badly damaged. The costly repairs would not be covered by the vehicle warranty.**

If Steam Is Coming From The Engine Compartment

⚠ WARNING:

Steam from an overheated engine can burn you badly, even if you just open the hood. Stay away from the engine if you see or hear steam coming from it. Just turn it off and get everyone away from the vehicle until it cools down. Wait until there is no sign of steam or coolant before you open the hood.

If you keep driving when your engine is overheated, the liquids in it can catch fire. You or others could be badly burned. Stop your engine if it overheats, and get out of the vehicle until the engine is cool.

Downloaded from www.Manualslib.com manuals search engine

If No Steam Is Coming From The Engine Compartment

If an engine overheat warning is displayed but no steam can be seen or heard, the problem may not be too serious. Sometimes the engine can get a little too hot when the vehicle:

- Climbs a long hill on a hot day.
- Stops after high-speed driving.
- Idles for long periods in traffic.

If the overheat warning is displayed with no sign of steam:

1. Turn the air conditioning off.
2. Turn the heater on to the highest temperature and to the highest fan speed. Open the windows as necessary.
3. In heavy traffic, let the engine idle in N (Neutral) while stopped. If it is safe to do so, pull off the road, shift to P (Park) or N (Neutral) and let the engine idle.

If the temperature overheat gage is no longer in the overheat zone or an overheat warning no longer displays, the vehicle can be driven. Continue to drive the vehicle slow for about 10 minutes. Keep a safe vehicle distance from the car in front of you. If the warning does not come back on, continue to drive normally.

If the warning continues, pull over, stop, and park the vehicle right away.

If there is no sign of steam, idle the engine for three minutes while parked. If the warning is still displayed, turn off the engine until it cools down.

Power Steering Fluid

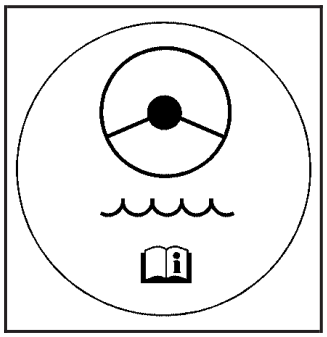

See *Engine Compartment Overview on page 6-12* for reservoir location.

Downloaded from www.Manualslib.com manuals search engine

When to Check Power Steering Fluid

The power steering fluid does not need to be checked regularly, unless there is a suspected leak or an unusual noise. If there is fluid loss, have the system inspected and repaired.

How to Check Power Steering Fluid

To check the power steering fluid:

1. Turn the engine off and let it cool down.
2. Clean the top and cap of the reservoir.
3. Remove the cap and wipe the dipstick with a clean rag.
4. Replace the cap and completely tighten.
5. Remove the cap again and check the fluid level on the dipstick.

The level should be between the COLD and HOT marks. If necessary, add only enough fluid to bring the level up to the COLD mark.

What to Use

To determine what kind of fluid to use, see *Recommended Fluids and Lubricants on page 7-10*. Always use the proper fluid.

Notice: **Use of the incorrect fluid may damage the vehicle and the damages may not be covered by the vehicle's warranty. Always use the correct fluid listed in *Recommended Fluids and Lubricants on page 7-10*.**

Windshield Washer Fluid

What to Use

When you need windshield washer fluid, be sure to read the manufacturer's instructions before use. If you will be operating your vehicle in an area where the temperature may fall below freezing, use a fluid that has sufficient protection against freezing.

Downloaded from www.Manualslib.com manuals search engine

Adding Washer Fluid

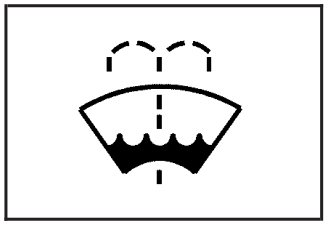

Open the cap with the washer symbol on it. Add washer fluid until the tank is full. See *Engine Compartment Overview on page 6-12* for reservoir location.

Notice:

- **When using concentrated washer fluid, follow the manufacturer's instructions for adding water.**
- **Do not mix water with ready-to-use washer fluid. Water can cause the solution to freeze and damage your washer fluid tank and other parts of the washer system. Also, water does not clean as well as washer fluid.**
- **Fill the washer fluid tank only three-quarters full when it is very cold. This allows for fluid expansion if freezing occurs, which could damage the tank if it is completely full.**
- **Do not use engine coolant (antifreeze) in your windshield washer. It can damage the vehicle's windshield washer system and paint.**

Brakes

Brake Fluid

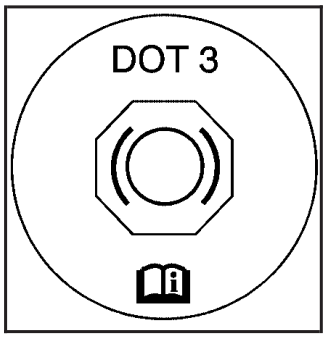

The brake master cylinder reservoir is filled with DOT 3 brake fluid. See *Engine Compartment Overview on page 6-12* for the location of the reservoir.

There are only two reasons why the brake fluid level in the reservoir might go down:

- The brake fluid level goes down because of normal brake lining wear. When new linings are installed, the fluid level goes back up.
- A fluid leak in the brake and/or clutch hydraulic system can also cause a low fluid level. Have the brake and/or clutch hydraulic system fixed, since a leak means that sooner or later the brakes and/or clutch will not work well.

Downloaded from www.Manualslib.com manuals search engine

Do not top off the brake/clutch fluid. Adding fluid does not correct a leak. If fluid is added when the brake linings are worn, there will be too much fluid when new brake linings are installed. Add or remove fluid, as necessary, only when work is done on the brake/clutch hydraulic system.

⚠ WARNING:

If too much brake fluid is added, it can spill on the engine and burn, if the engine is hot enough. You or others could be burned, and the vehicle could be damaged. Add brake fluid only when work is done on the brake and/or clutch hydraulic system.

When the brake fluid falls to a low level, the brake warning light comes on. See *Brake System Warning Light on page 4-23*.

What to Add

Use only new DOT 3 brake fluid from a sealed container. See *Recommended Fluids and Lubricants on page 7-10*.

Always clean the brake fluid reservoir cap and the area around the cap before removing it. This helps keep dirt from entering the reservoir.

⚠ WARNING:

With the wrong kind of fluid in the brake or clutch hydraulic system, the brakes or clutch might not work well. This could cause a crash. Always use the proper brake fluid.

Notice:

- **Using the wrong fluid can badly damage brake or clutch hydraulic system parts. For example, just a few drops of mineral-based oil, such as engine oil, in the brake or clutch hydraulic system can damage brake or clutch hydraulic system parts so badly that they will have to be replaced. Do not let someone put in the wrong kind of fluid.**
- **If brake fluid is spilled on the vehicle's painted surfaces, the paint finish can be damaged. Be careful not to spill brake fluid on the vehicle. If you do, wash it off immediately. See *Washing Your Vehicle on page 6-93*.**

Downloaded from www.Manualslib.com manuals search engine

Brake Wear

This vehicle has disc brakes. Disc brake pads have built-in wear indicators that make a high-pitched warning sound when the brake pads are worn and new pads are needed. The sound can come and go or be heard all the time the vehicle is moving, except when applying the brake pedal firmly.

⚠ WARNING:

The brake wear warning sound means that soon the brakes will not work well. That could lead to an accident. When the brake wear warning sound is heard, have the vehicle serviced.

Notice: **Continuing to drive with worn-out brake pads could result in costly brake repair.**

Some driving conditions or climates can cause a brake squeal when the brakes are first applied or lightly applied. This does not mean something is wrong with the brakes.

Properly torqued wheel nuts are necessary to help prevent brake pulsation. When tires are rotated, inspect brake pads for wear and evenly tighten wheel nuts in the proper sequence to torque specifications in *Capacities and Specifications on page 6-104*.

Brake linings should always be replaced as complete axle sets.

Brake Pedal Travel

See your dealer/retailer if the brake pedal does not return to normal height, or if there is a rapid increase in pedal travel. This could be a sign that brake service might be required.

Brake Adjustment

Every time the brakes are applied, with or without the vehicle moving, the brakes adjust for wear.

Replacing Brake System Parts

The braking system on a vehicle is complex. Its many parts have to be of top quality and work well together if the vehicle is to have really good braking. The vehicle was designed and tested with top-quality brake parts.

Downloaded from www.Manualslib.com manuals search engine

When parts of the braking system are replaced — for example, when the brake linings wear down and new ones are installed — be sure to get new approved replacement parts. If this is not done, the brakes might not work properly. For example, if someone puts in brake linings that are wrong for the vehicle, the balance between the front and rear brakes can change — for the worse. The braking performance expected can change in many other ways if the wrong replacement brake parts are installed.

Battery

Refer to the replacement number on the original battery label when a new battery is needed. See *Engine Compartment Overview on page 6-12* for battery location.

⚠ DANGER:

Battery posts, terminals, and related accessories contain lead and lead compounds, chemicals known to the State of California to cause cancer and reproductive harm. Wash hands after handling.

Vehicle Storage

⚠ WARNING:

Batteries have acid that can burn you and gas that can explode. You can be badly hurt if you are not careful. See *Jump Starting on page 6-36* for tips on working around a battery without getting hurt.

Infrequent Usage: Remove the black, negative (–) cable from the battery to keep the battery from running down.

Extended Storage: Remove the black, negative (–) cable from the battery or use a battery trickle charger.

Downloaded from www.Manualslib.com manuals search engine

Jump Starting

If the vehicle's battery has run down, you may want to use another vehicle and some jumper cables to start the vehicle. Be sure to use the following steps to do it safely.

⚠ WARNING:

Batteries can hurt you. They can be dangerous because:

- They contain acid that can burn you.
- They contain gas that can explode or ignite.
- They contain enough electricity to burn you.

If you do not follow these steps exactly, some or all of these things can hurt you.

Notice: **Ignoring these steps could result in costly damage to the vehicle that would not be covered by the warranty.**

Trying to start the vehicle by pushing or pulling it will not work, and it could damage the vehicle.

1. Check the other vehicle. It must have a 12-volt battery with a negative ground system.

Notice: **If the other vehicle's system is not a 12-volt system with a negative ground, both vehicles can be damaged. Only use vehicles with 12-volt systems with negative grounds to jump start your vehicle.**

2. Get the vehicles close enough so the jumper cables can reach, but be sure the vehicles are not touching each other. If they are, it could cause a ground connection you do not want. You would not be able to start the vehicle, and the bad grounding could damage the electrical systems.

   To avoid the possibility of the vehicles rolling, set the parking brake firmly on both vehicles involved in the jump start procedure. Put an automatic transmission in P (Park) or a manual transmission in N (Neutral) before setting the parking brake.

Notice: **If you leave the radio or other accessories on during the jump starting procedure, they could be damaged. The repairs would not be covered by the warranty. Always turn off the radio and other accessories when jump starting the vehicle.**

3. Turn off the ignition on both vehicles. Unplug unnecessary accessories plugged into the cigarette lighter or the accessory power outlet. Turn off the radio and all lamps that are not needed. This will avoid sparks and help save both batteries. And it could save the radio!

Downloaded from www.Manualslib.com manuals search engine

4. Open the hood on the other vehicle and locate the positive (+) and negative (–) terminal locations on that vehicle.

   You will not need to access your battery for jump starting. The vehicle has a remote positive (+) and a remote negative (–) jump starting terminal.

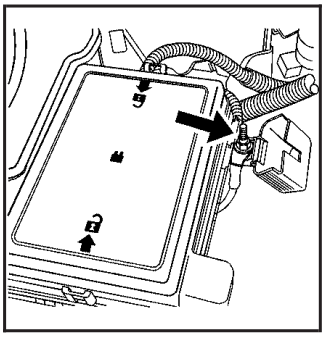

Locate the remote positive (+) terminal which is located under a red plastic cover on the engine compartment fuse block. Open the red plastic cover to access the terminal.

   Do not remove fuse block cover to jump start the vehicle.

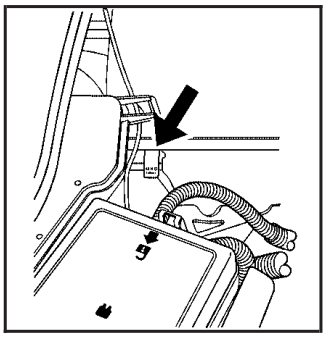

Locate the remote negative (–) ground bracket which is located in the rear of the engine compartment, on the passenger side of the vehicle, and is marked GND (–).

See *Engine Compartment Overview on page 6-12* for more information on the location of the positive (+) and negative (–) terminals on the vehicle.

Downloaded from www.Manualslib.com manuals search engine

⚠ WARNING:

An electric fan can start up even when the engine is not running and can injure you. Keep hands, clothing and tools away from any underhood electric fan.

⚠ WARNING:

Using a match near a battery can cause battery gas to explode. People have been hurt doing this, and some have been blinded. Use a flashlight if you need more light.

Be sure the battery has enough water. You do not need to add water to the battery installed in your new vehicle. But if a battery has filler caps, be sure the right amount of fluid is there. If it is low, add water to take care of that first. If you don't, explosive gas could be present.

WARNING: (Continued)

WARNING: (Continued)

Battery fluid contains acid that can burn you. Do not get it on you. If you accidentally get it in your eyes or on your skin, flush the place with water and get medical help immediately.

⚠ WARNING:

Fans or other moving engine parts can injure you badly. Keep your hands away from moving parts once the engine is running.

5. Check that the jumper cables do not have loose or missing insulation. If they do, you could get a shock. The vehicles could be damaged too.

   Before you connect the cables, here are some basic things you should know. Positive (+) will go to positive (+) or to a remote positive (+) terminal if the vehicle has one. Negative (–) will go to a heavy, unpainted metal engine part or to a remote negative (–) terminal if the vehicle has one.

Downloaded from www.Manualslib.com manuals search engine

Do not connect positive (+) to negative (–) or you will get a short that would damage the battery and maybe other parts too. And do not connect the negative (–) cable to the negative (–) terminal on the dead battery because this can cause sparks.

6. Connect the red positive (+) cable to the positive (+) terminal location on the vehicle with the dead battery. Use a remote positive (+) terminal if the vehicle has one.
7. Do not let the other end touch metal. Connect it to the positive (+) terminal of the good battery. Use a remote positive (+) terminal if the vehicle has one.
8. Now connect the black negative (–) cable to the negative (–) terminal of the good battery. Use a remote negative (–) terminal if the vehicle has one.

   Do not let the other end touch anything until the next step. The other end of the negative (–) cable does not go to the dead battery. It goes to a heavy, unpainted metal engine part or to a remote negative (–) terminal on the vehicle with the dead battery.
9. Connect the other end of the negative (–) cable to the negative (–) terminal location on the vehicle with the dead battery. Your vehicle has a remote negative (–) ground bracket for this purpose.
10. Now start the vehicle with the good battery and run the engine for a while.
11. Try to start the vehicle that had the dead battery. If it will not start after a few tries, it probably needs service.

Downloaded from www.Manualslib.com manuals search engine

Notice: **If the jumper cables are connected or removed in the wrong order, electrical shorting may occur and damage the vehicle. The repairs would not be covered by the vehicle warranty. Always connect and remove the jumper cables in the correct order, making sure that the cables do not touch each other or other metal.**

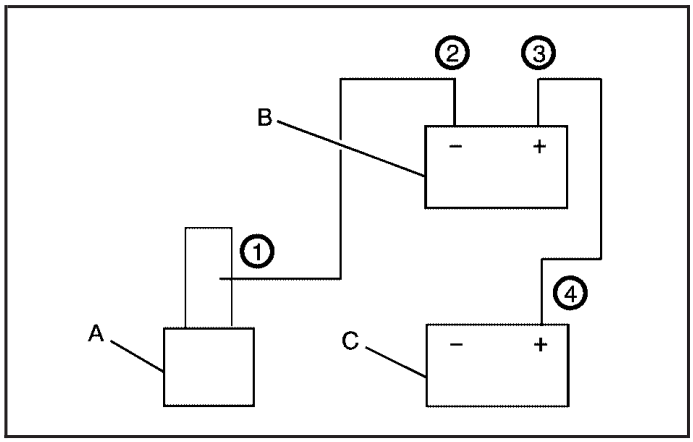

Jumper Cable Removal

A. Heavy, Unpainted Metal Engine Part or Remote Negative (–) Terminal

B. Good Battery or Remote Positive (+) and Remote Negative (–) Terminals

C. Dead Battery or Remote Positive (+) Terminal

To disconnect the jumper cables from both vehicles:

1. Disconnect the black negative (–) cable from the vehicle that had the dead battery.
2. Disconnect the black negative (–) cable from the vehicle with the good battery.
3. Disconnect the red positive (+) cable from the vehicle with the good battery.
4. Disconnect the red positive (+) cable from the other vehicle.
5. Return the positive (+) terminal cover to its original position.

Rear Axle

When to Check Lubricant

It is not necessary to regularly check rear axle fluid unless you suspect there is a leak or you hear an unusual noise. A fluid loss could indicate a problem. Have it inspected and repaired.

Downloaded from www.Manualslib.com manuals search engine

How to Check Lubricant

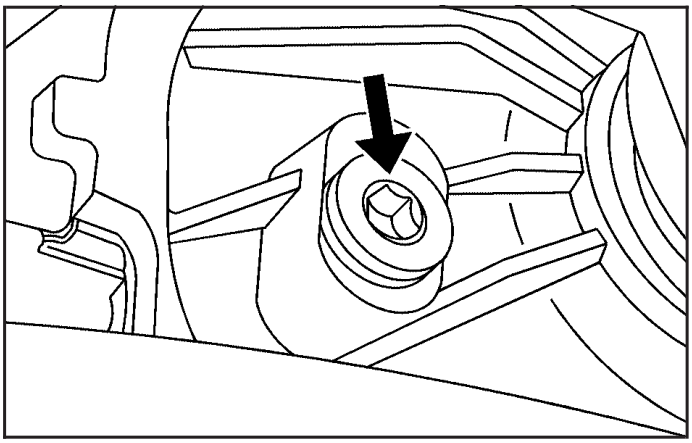

To get an accurate reading, the vehicle should be on a level surface.

If the level is below the bottom of the filler plug hole, located on the rear axle, you'll need to add some lubricant. Add enough lubricant to raise the level to the bottom of the filler plug hole.

What to Use

Refer to the Maintenance Schedule to determine what kind of lubricant to use. See *Recommended Fluids and Lubricants on page 7-10*.

Headlamp Aiming

Headlamp aim has been preset at the factory and should need no further adjustment.

However, if your vehicle is damaged in a crash, the headlamp aim may be affected. Aim adjustment to the low-beam headlamps may be necessary if oncoming drivers flash their high-beam headlamps at you (for vertical aim).

If the headlamps need to be re-aimed, it is recommended that you take the vehicle to your dealer/retailer for service.

Downloaded from www.Manualslib.com manuals search engine

Bulb Replacement

For the proper type of replacement bulbs, see *Replacement Bulbs on page 6-45*.

For any bulb changing procedure not listed in this section, contact your dealer/retailer.

Halogen Bulbs

⚠ WARNING:

Halogen bulbs have pressurized gas inside and can burst if you drop or scratch the bulb. You or others could be injured. Be sure to read and follow the instructions on the bulb package.

Headlamps

To replace the low/high-beam/Daytime Running Lamps (DRL) headlamp bulb:

1. Open the hood. See *Hood Release on page 6-11*.

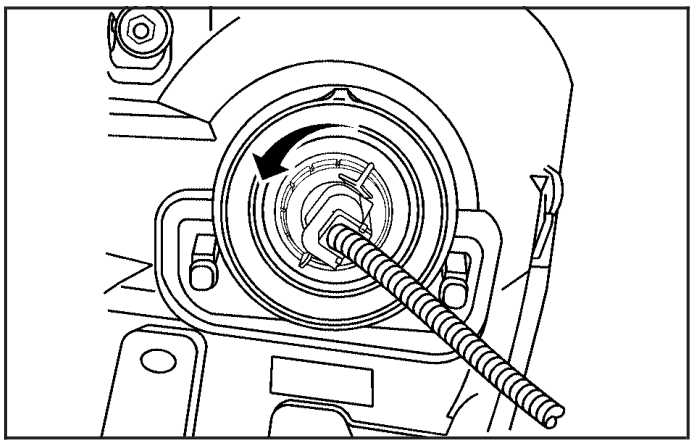

2. Turn the bulb socket counterclockwise and pull it from the headlamp assembly.
3. Holding the base of the socket, pull the old bulb from the bulb socket.
4. Push the new bulb straight into the bulb socket until it connects.
5. Push the bulb socket into the headlamp assembly and turn it clockwise to lock it into place.

Downloaded from www.Manualslib.com manuals search engine

Front Turn Signal, Parking and Fog Lamps

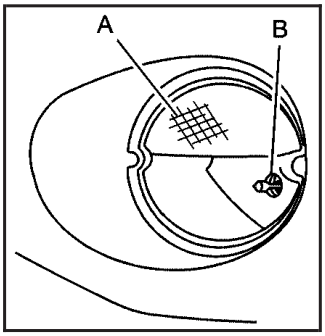

A. Front Turn Signal/ Parking Lamp

B. Fog Lamp (If Equipped)

To replace one of these bulbs:

1. Open the hood. See *Hood Release on page 6-11*.
2. Locate the bulb assembly under the front bumper.
3. Turn the bulb socket counterclockwise and pull out the bulb assembly.
4. Disconnect the bulb socket from the wiring harness.
5. Pull the old bulb straight out of the bulb socket.
6. Push the new bulb straight into the bulb socket until it connects.
7. Reconnect the bulb socket to the wiring harness.
8. Push the bulb socket straight into the bulb assembly and turn it clockwise to lock it into place.

Taillamps, Turn Signal, and Stoplamps (Base Level)

To replace one of these bulbs:

1. Open the trunk. See *Trunk on page 3-10*.

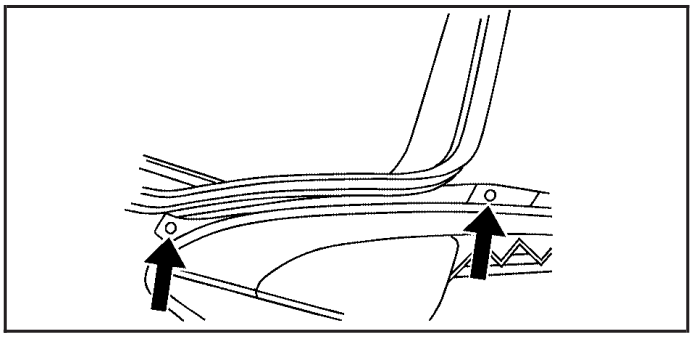

2. From inside the vehicle, remove the two screws from the taillamp assembly.
3. Remove the taillamp assembly.

Downloaded from www.Manualslib.com manuals search engine

4. Turn the bulb socket counterclockwise and pull it straight out of the taillamp assembly.
5. Pull the old bulb straight out of the bulb socket.
6. Push the new bulb straight into the bulb socket until it connects.
7. Push the bulb socket straight into the taillamp assembly and turn it clockwise to lock it into place.
8. Reinstall the taillamp assembly and the two screws that holds the taillamp assembly from inside the vehicle.

Taillamps, Turn Signal, and Stoplamps (Removable Hardtop)

If your vehicle has a removable hardtop, see your dealer/retailer to replace these bulbs.

Back-Up Lamps

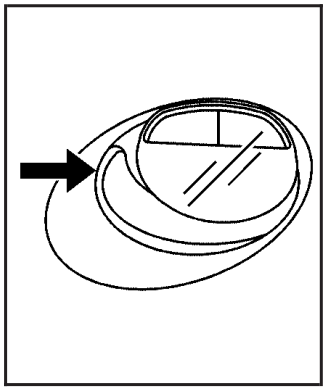

The back-up lamps are located in the rear bumper.

To replace a bulb:

1. Locate the bulb socket under and behind the rear bumper.
2. Turn it counterclockwise and pull it straight out of the lamp assembly.
3. Pull the old bulb straight out of the bulb socket.
4. Push the new bulb straight into the bulb socket until it connects.
5. Reinstall the bulb socket by lining up the tabs in the lamp assembly and turn it clockwise to secure it.

Downloaded from www.Manualslib.com manuals search engine

License Plate Lamp

To replace the license plate lamp bulb:

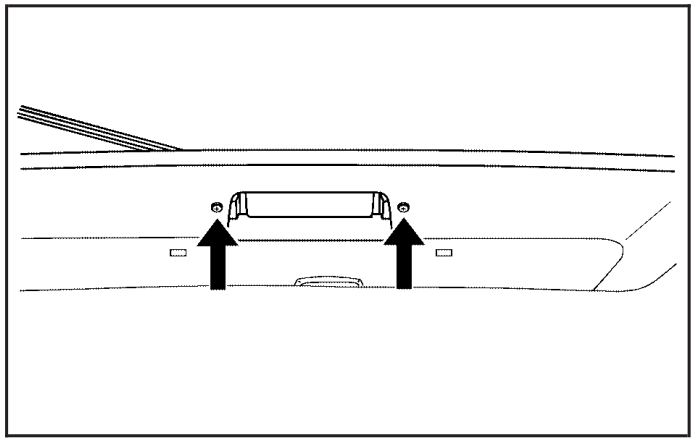

1. Remove the license plate assembly by turning the two screws counterclockwise.
2. Turn and pull the license plate lamp forward through the fascia opening.
3. Turn the bulb socket counterclockwise and pull the bulb straight out of the socket.
4. Push the new bulb in and turn it clockwise to install.
5. Replace the license plate lamp by pushing it through the fascia opening.
6. Turn the two screws that hold the license plate lamp clockwise to reinstall.

Replacement Bulbs

Exterior Lamp	Bulb Number
Back-Up Lamps	3047
Fog Lamp	898*
Front Parking/Turn Signal Lamp	3757NAK
Front Sidemarker Lamp	194
Headlamps, High/Low-Beam/ Daytime Running Lights	H13
License Plate Lamp	168
Stoplamp, Taillamp and Turn Signal Lamp	3157K
* Uplevel Model	

For replacement bulbs not listed here, contact your dealer/retailer.

Downloaded from www.Manualslib.com manuals search engine

Windshield Wiper Blade Replacement

Windshield wiper blades should be inspected for wear and cracking. See *Scheduled Maintenance on page 7-3* for more information.

Replacement blades come in different types and are removed in different ways. For proper type and length, see *Maintenance Replacement Parts on page 7-12*.

To replace the windshield wiper blade assembly:

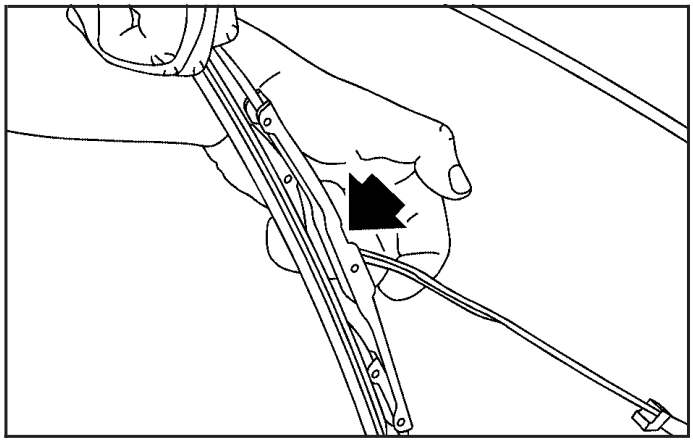

1. Lift the wiper arm away from the windshield.

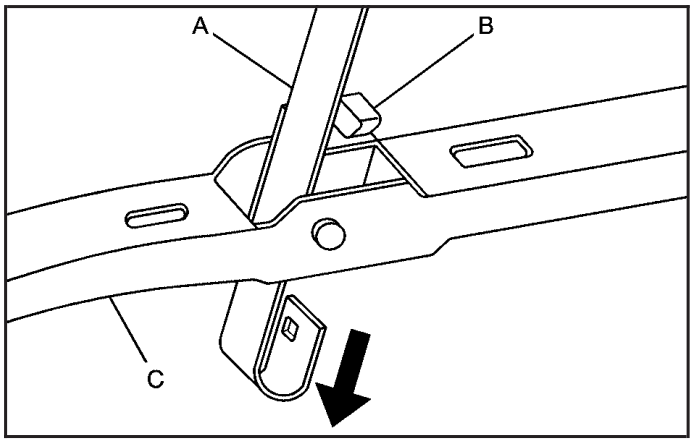

2. Push the release lever (B) to disengage the hook and push the wiper arm (A) out of the blade (C).
3. Push the new wiper blade securely on the wiper arm until you hear the release lever click into place.

Downloaded from www.Manualslib.com manuals search engine

Tires

Your new vehicle comes with high-quality tires made by a leading tire manufacturer. If you ever have questions about your tire warranty and where to obtain service, see your vehicle Warranty booklet for details. For additional information refer to the tire manufacturer.

⚠ WARNING:

Poorly maintained and improperly used tires are dangerous.

- Overloading your vehicle's tires can cause overheating as a result of too much flexing. You could have an air-out and a serious accident. See *Loading the Vehicle on page 5-22*.

WARNING: (Continued)

WARNING: (Continued)

- Underinflated tires pose the same danger as overloaded tires. The resulting accident could cause serious injury. Check all tires frequently to maintain the recommended pressure. Tire pressure should be checked when your vehicle's tires are cold. See *Inflation - Tire Pressure on page 6-54*.
- Overinflated tires are more likely to be cut, punctured, or broken by a sudden impact — such as when you hit a pothole. Keep tires at the recommended pressure.
- Worn, old tires can cause accidents. If the tire's tread is badly worn, or if your vehicle's tires have been damaged, replace them.

Downloaded from www.Manualslib.com manuals search engine

Low-Profile Tires

If your vehicle has P245/45R18 size tires, they are classified as low-profile tires. These tires are designed for very responsive driving on wet or dry pavement. You may also notice more road noise with low-profile performance tires and that they tend to wear faster.

Notice: **If the vehicle has low-profile tires, they are more susceptible to damage from road hazards or curb impact than standard profile tires. Tire and/or wheel assembly damage can occur when coming into contact with road hazards like, potholes, or sharp edged objects, or when sliding into a curb. The vehicle warranty does not cover this type of damage. Keep tires set to the correct inflation pressure and, when possible avoid contact with curbs, potholes, and other road hazards.**

Winter Tires

If your vehicle has P245/45R18 size tires, they are classified as low-profile performance tires. These tires are designed for very responsive driving on wet or dry pavement. If you expect to drive on snow or ice covered roads often, you may want to get winter tires for your vehicle. The low-profile performance tires may not offer the traction you would like or the same level of performance as winter tires on snow or ice covered roads.

Winter tires, in general, are designed for increased traction on snow and ice covered roads. With winter tires, there may be decreased dry road traction, increased road noise, and shorter tire tread life. After switching to winter tires, be alert for changes in vehicle handling and braking.

See your dealer/retailer for details regarding winter tire availability and proper tire selection. Also, see *Buying New Tires on page 6-64*.

If you choose to use winter tires:

- Use tires of the same brand and tread type on all four wheel positions.
- Use only radial ply tires of the same size, load range, and speed rating as the original equipment tires.

Winter tires with the same speed rating as your original equipment tires may not be available for H, V, W, Y, and ZR speed rated tires. If you choose winter tires with a lower speed rating, never exceed the tire's maximum speed capability.

Downloaded from www.Manualslib.com manuals search engine

Tire Sidewall Labeling

Useful information about a tire is molded into its sidewall. The example below shows a typical passenger (p-metric) tire sidewall.

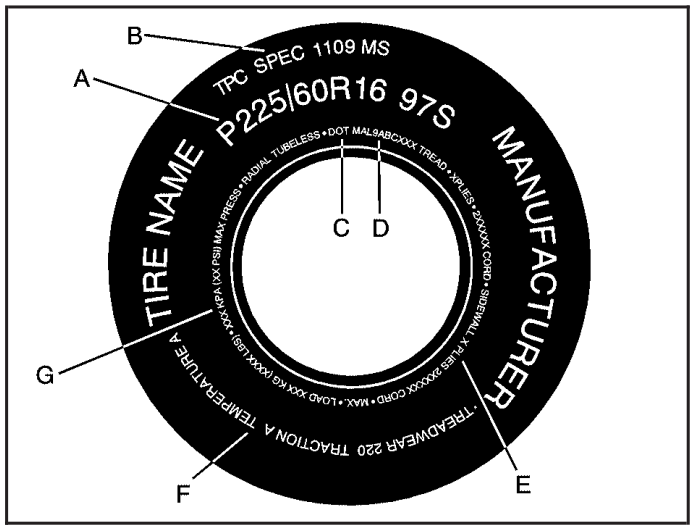

Passenger (P-Metric) Tire Example

(A) Tire Size: The tire size is a combination of letters and numbers used to define a particular tire's width, height, aspect ratio, construction type, and service description. See the "Tire Size" illustration later in this section for more detail.

(B) TPC Spec (Tire Performance Criteria Specification): Original equipment tires designed to GM's specific tire performance criteria have a TPC specification code molded onto the sidewall. GM's TPC specifications meet or exceed all federal safety guidelines.

(C) DOT (Department of Transportation): The Department of Transportation (DOT) code indicates that the tire is in compliance with the U.S. Department of Transportation Motor Vehicle Safety Standards.

(D) Tire Identification Number (TIN): The letters and numbers following DOT code are the Tire Identification Number (TIN). The TIN shows the manufacturer and plant code, tire size, and date the tire was manufactured. The TIN is molded onto both sides of the tire, although only one side may have the date of manufacture.

(E) Tire Ply Material: The type of cord and number of plies in the sidewall and under the tread.

(F) Uniform Tire Quality Grading (UTQG): Tire manufacturers are required to grade tires based on three performance factors: treadwear, traction and temperature resistance. For more information see *Uniform Tire Quality Grading on page 6-66*.

Downloaded from www.Manualslib.com manuals search engine

(G) Maximum Cold Inflation Load Limit: Maximum load that can be carried and the maximum pressure needed to support that load.

Tire Size

The following illustration shows an example of a typical passenger (p-metric) vehicle tire size.

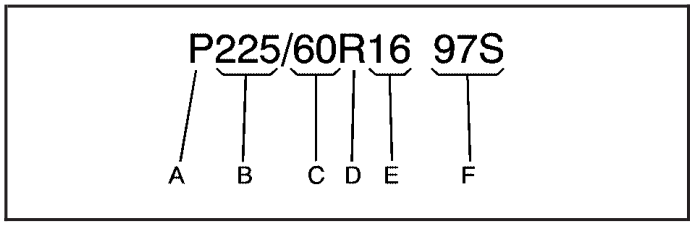

(A) Passenger (P-Metric) Tire: The United States version of a metric tire sizing system. The letter P as the first character in the tire size means a passenger vehicle tire engineered to standards set by the U. S. Tire and Rim Association.

(B) Tire Width: The three-digit number indicates the tire section width in millimeters from sidewall to sidewall.

(C) Aspect Ratio: A two-digit number that indicates the tire height-to-width measurements. For example, if the tire size aspect ratio is 60, as shown in item C of the illustration, it would mean that the tire's sidewall is 60 percent as high as it is wide.

(D) Construction Code: A letter code is used to indicate the type of ply construction in the tire. The letter R means radial ply construction; the letter D means diagonal or bias ply construction; and the letter B means belted-bias ply construction.

(E) Rim Diameter: Diameter of the wheel in inches.

(F) Service Description: These characters represent the load index and speed rating of the tire. The load index represents the load carry capacity a tire is certified to carry. The speed rating is the maximum speed a tire is certified to carry a load.

Downloaded from www.Manualslib.com manuals search engine

Tire Terminology and Definitions

Air Pressure: The amount of air inside the tire pressing outward on each square inch of the tire. Air pressure is expressed in pounds per square inch (psi) or kilopascal (kPa).

Accessory Weight: This means the combined weight of optional accessories. Some examples of optional accessories are, automatic transmission, power steering, power brakes, power windows, power seats, and air conditioning.

Aspect Ratio: The relationship of a tire's height to its width.

Belt: A rubber coated layer of cords that is located between the plies and the tread. Cords may be made from steel or other reinforcing materials.

Bead: The tire bead contains steel wires wrapped by steel cords that hold the tire onto the rim.

Bias Ply Tire: A pneumatic tire in which the plies are laid at alternate angles less than 90 degrees to the centerline of the tread.

Cold Tire Pressure: The amount of air pressure in a tire, measured in pounds per square inch (psi) or kilopascals (kPa) before a tire has built up heat from driving. See *Inflation - Tire Pressure on page 6-54*.

Curb Weight: The weight of a motor vehicle with standard and optional equipment including the maximum capacity of fuel, oil, and coolant, but without passengers and cargo.

DOT Markings: A code molded into the sidewall of a tire signifying that the tire is in compliance with the U.S. Department of Transportation (DOT) motor vehicle safety standards. The DOT code includes the Tire Identification Number (TIN), an alphanumeric designator which can also identify the tire manufacturer, production plant, brand, and date of production.

GVWR: Gross Vehicle Weight Rating. See *Loading the Vehicle on page 5-22*.

GAWR FRT: Gross Axle Weight Rating for the front axle. See *Loading the Vehicle on page 5-22*.

Downloaded from www.Manualslib.com manuals search engine

GAWR RR: Gross Axle Weight Rating for the rear axle. See *Loading the Vehicle on page 5-22*.

Intended Outboard Sidewall: The side of an asymmetrical tire, that must always face outward when mounted on a vehicle.

Kilopascal (kPa): The metric unit for air pressure.

Light Truck (LT-Metric) Tire: A tire used on light duty trucks and some multipurpose passenger vehicles.

Load Index: An assigned number ranging from 1 to 279 that corresponds to the load carrying capacity of a tire.

Maximum Inflation Pressure: The maximum air pressure to which a cold tire can be inflated. The maximum air pressure is molded onto the sidewall.

Maximum Load Rating: The load rating for a tire at the maximum permissible inflation pressure for that tire.

Maximum Loaded Vehicle Weight: The sum of curb weight, accessory weight, vehicle capacity weight, and production options weight.

Normal Occupant Weight: The number of occupants a vehicle is designed to seat multiplied by 150 lbs (68 kg). See *Loading the Vehicle on page 5-22*.

Occupant Distribution: Designated seating positions.

Outward Facing Sidewall: The side of an asymmetrical tire that has a particular side that faces outward when mounted on a vehicle. The side of the tire that contains a whitewall, bears white lettering, or bears manufacturer, brand, and/or model name molding that is higher or deeper than the same moldings on the other sidewall of the tire.

Passenger (P-Metric) Tire: A tire used on passenger cars and some light duty trucks and multipurpose vehicles.

Downloaded from www.Manualslib.com manuals search engine

Recommended Inflation Pressure: Vehicle manufacturer's recommended tire inflation pressure as shown on the tire placard. See *Inflation - Tire Pressure on page 6-54* and *Loading the Vehicle on page 5-22*.

Radial Ply Tire: A pneumatic tire in which the ply cords that extend to the beads are laid at 90 degrees to the centerline of the tread.

Rim: A metal support for a tire and upon which the tire beads are seated.

Sidewall: The portion of a tire between the tread and the bead.

Speed Rating: An alphanumeric code assigned to a tire indicating the maximum speed at which a tire can operate.

Traction: The friction between the tire and the road surface. The amount of grip provided.

Tread: The portion of a tire that comes into contact with the road.

Treadwear Indicators: Narrow bands, sometimes called wear bars, that show across the tread of a tire when only 1/16 inch (1.6 mm) of tread remains. See *When It Is Time for New Tires on page 6-63*.

UTQGS (Uniform Tire Quality Grading Standards): A tire information system that provides consumers with ratings for a tire's traction, temperature, and treadwear. Ratings are determined by tire manufacturers using government testing procedures. The ratings are molded into the sidewall of the tire. See *Uniform Tire Quality Grading on page 6-66*.

Vehicle Capacity Weight: The number of designated seating positions multiplied by 150 lbs (68 kg) plus the rated cargo load. See *Loading the Vehicle on page 5-22*.

Vehicle Maximum Load on the Tire: Load on an individual tire due to curb weight, accessory weight, occupant weight, and cargo weight.

Vehicle Placard: A label permanently attached to a vehicle showing the vehicle's capacity weight and the original equipment tire size and recommended inflation pressure. See "Tire and Loading Information Label" under *Loading the Vehicle on page 5-22*.

Downloaded from www.Manualslib.com manuals search engine

Inflation - Tire Pressure

Tires need the correct amount of air pressure to operate effectively.

Notice: **Do not let anyone tell you that under-inflation or over-inflation is all right. It is not. If your tires do not have enough air (under-inflation), you can get the following:**

- **Too much flexing**
- **Too much heat**
- **Tire overloading**
- **Premature or irregular wear**
- **Poor handling**
- **Reduced fuel economy**

If your tires have too much air (over-inflation), you can get the following:

- **Unusual wear**
- **Poor handling**
- **Rough ride**
- **Needless damage from road hazards**

A vehicle specific Tire and Loading Information label is attached to your vehicle. This label shows your vehicle's original equipment tires and the correct inflation pressures for your tires when they are cold. The recommended cold tire inflation pressure, shown on the label, is the minimum amount of air pressure needed to support your vehicle's maximum load carrying capacity.

For additional information regarding how much weight your vehicle can carry, and an example of the Tire and Loading Information label, see *Loading the Vehicle on page 5-22*. How you load your vehicle affects vehicle handling and ride comfort. Never load your vehicle with more weight than it was designed to carry.

Downloaded from www.Manualslib.com manuals search engine

When to Check

Check your tires once a month or more.

How to Check

Use a good quality pocket-type gage to check tire pressure. You cannot tell if your tires are properly inflated simply by looking at them. Radial tires may look properly inflated even when they are under-inflated. Check the tire's inflation pressure when the tires are cold. Cold means your vehicle has been sitting for at least three hours or driven no more than 1 mile (1.6 km).

Remove the valve cap from the tire valve stem. Press the tire gage firmly onto the valve to get a pressure measurement. If the cold tire inflation pressure matches the recommended pressure on the Tire and Loading Information label, no further adjustment is necessary. If the inflation pressure is low, add air until you reach the recommended amount.

If you overfill the tire, release air by pushing on the metal stem in the center of the tire valve. Re-check the tire pressure with the tire gage.

Be sure to put the valve caps back on the valve stems. They help prevent leaks by keeping out dirt and moisture.

Tire Pressure Monitor System

The Tire Pressure Monitor System (TPMS) uses radio and sensor technology to check tire pressure levels. The TPMS sensors monitor the air pressure in your vehicle's tires and transmit tire pressure readings to a receiver located in the vehicle.

Each tire, including the spare (if provided), should be checked monthly when cold and inflated to the inflation pressure recommended by the vehicle manufacturer on the vehicle placard or tire inflation pressure label. (If your vehicle has tires of a different size than the size indicated on the vehicle placard or tire inflation pressure label, you should determine the proper tire inflation pressure for those tires.)

As an added safety feature, your vehicle has been equipped with a tire pressure monitoring system (TPMS) that illuminates a low tire pressure telltale when one or more of your tires is significantly under-inflated.

Accordingly, when the low tire pressure telltale illuminates, you should stop and check your tires as soon as possible, and inflate them to the proper pressure. Driving on a significantly under-inflated tire causes the tire to overheat and can lead to tire failure. Under-inflation also reduces fuel efficiency and tire tread life, and may affect the vehicle's handling and stopping ability.

Downloaded from www.Manualslib.com manuals search engine

Please note that the TPMS is not a substitute for proper tire maintenance, and it is the driver's responsibility to maintain correct tire pressure, even if under-inflation has not reached the level to trigger illumination of the TPMS low tire pressure telltale.

Your vehicle has also been equipped with a TPMS malfunction indicator to indicate when the system is not operating properly. The TPMS malfunction indicator is combined with the low tire pressure telltale. When the system detects a malfunction, the telltale will flash for approximately one minute and then remain continuously illuminated. This sequence will continue upon subsequent vehicle start-ups as long as the malfunction exists.

When the malfunction indicator is illuminated, the system may not be able to detect or signal low tire pressure as intended. TPMS malfunctions may occur for a variety of reasons, including the installation of replacement or alternate tires or wheels on the vehicle that prevent the TPMS from functioning properly. Always check the TPMS malfunction telltale after replacing one or more tires or wheels on your vehicle to ensure that the replacement or alternate tires and wheels allow the TPMS to continue to function properly.

See *Tire Pressure Monitor Operation on page 6-56* for additional information.

Federal Communications Commission (FCC) and Industry and Science Canada

See *Radio Frequency Statement on page 8-20* for information regarding Part 15 of the Federal Communications Commission (FCC) Rules and RSS-210/211 of Industry and Science Canada.

Tire Pressure Monitor Operation

This vehicle may have a Tire Pressure Monitor System (TPMS). The TPMS is designed to warn the driver when a low tire pressure condition exists. TPMS sensors are mounted onto each tire and wheel assembly. The TPMS sensors monitor the air pressure in the vehicle's tires and transmits the tire pressure readings to a receiver located in the vehicle.

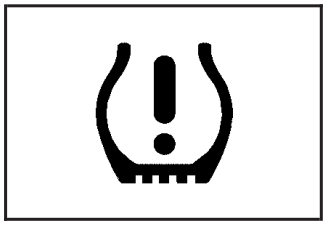

When a low tire pressure condition is detected, the TPMS illuminates the low tire pressure warning light located on the instrument panel cluster.

Downloaded from www.Manualslib.com manuals search engine

At the same time a message to check the pressure in a specific tire appears on the Driver Information Center (DIC) display. The low tire pressure warning light and the DIC warning message come on at each ignition cycle until the tires are inflated to the correct inflation pressure. Using the DIC, tire pressure levels can be viewed by the driver. For additional information and details about the DIC operation and displays see *DIC Operation and Displays on page 4-33* and *DIC Warnings and Messages on page 4-36*.

The low tire pressure warning light may come on in cool weather when the vehicle is first started, and then turn off as you start to drive. This could be an early indicator that the air pressure in the tire(s) are getting low and need to be inflated to the proper pressure.

A Tire and Loading Information label, attached to your vehicle, shows the size of your vehicle's original equipment tires and the correct inflation pressure for your vehicle's tires when they are cold. See *Loading the Vehicle on page 5-22*, for an example of the Tire and Loading Information label and its location on your vehicle. Also see *Inflation - Tire Pressure on page 6-54*.

Your vehicle's TPMS system can warn you about a low tire pressure condition but it does not replace normal tire maintenance. See *Tire Inspection and Rotation on page 6-61* and *Tires on page 6-47*.

Notice: **Using non-approved tire sealants could damage the Tire Pressure Monitor System (TPMS) sensors. TPMS sensor damage caused by using an incorrect tire sealant is not covered by the vehicle warranty. Always use the GM approved tire sealant available through your dealer/retailer.**

Your vehicle, when new, included a factory-installed Tire Inflator Kit. This kit uses a GM approved liquid tire sealant. Using non-approved tire sealants could damage the TPMS sensors. See *Tire Sealant and Compressor Kit (Without Selector Switch) on page 6-71* or *Tire Sealant and Compressor Kit (With Selector Switch) on page 6-80* for information regarding the inflator kit materials and instructions.

Downloaded from www.Manualslib.com manuals search engine

TPMS Malfunction Light and Message

The TPMS will not function properly if one or more of the TPMS sensors are missing or inoperable. When the system detects a malfunction, the low tire warning light flashes for about one minute and then stays on for the remainder of the ignition cycle. A DIC warning message is also displayed. The low tire warning light and DIC warning message come on at each ignition cycle until the problem is corrected. Some of the conditions that can cause the malfunction light and DIC message to come on are:

- The TPMS sensor matching process was started but not completed or not completed successfully after rotating the vehicle's tires. The DIC message and TPMS malfunction light should go off once the TPMS sensor matching process is performed successfully. See "TPMS Sensor Matching Process" later in this section.
- One or more TPMS sensors are missing or damaged. The DIC message and the TPMS malfunction light should go off when the TPMS sensors are installed and the sensor matching process is performed successfully. See your dealer/retailer for service.
- Replacement tires or wheels do not match your vehicle's original equipment tires or wheels. Tires and wheels other than those recommended for your vehicle could prevent the TPMS from functioning properly. See *Buying New Tires on page 6-64*.
- Operating electronic devices or being near facilities using radio wave frequencies similar to the TPMS could cause the TPMS sensors to malfunction.

If the TPMS is not functioning it cannot detect or signal a low tire condition. See your dealer/retailer for service if the TPMS malfunction light and DIC message comes on and stays on.

Downloaded from www.Manualslib.com manuals search engine

TPMS Sensor Matching Process

Each TPMS sensor has a unique identification code. Any time you replace one or more of the TPMS sensors or rotate the vehicle's tires, the identification codes need to be matched to the new tire/wheel position. The sensors are matched, to the tire/wheel positions, in the following order: driver side front tire, passenger side front tire, passenger side rear tire, and driver side rear tire using a TPMS diagnostic tool. See your dealer/retailer for service.

The TPMS sensors can also be matched to each tire/wheel position by increasing or decreasing the tire's air pressure. When increasing the tire's pressure, do not exceed the maximum inflation pressure indicated on the tire's sidewall. To decrease the tire's air-pressure use the pointed end of the valve cap, a pencil-style air pressure gage, or a key.

You have two minutes to match each tire and wheel position. If it takes longer than two minutes to match any tire and wheel position, the matching process stops and you need to start over.

TPMS Matching Process for Vehicles with Remote Keyless Entry (RKE)

1. Set the parking brake.
2. Turn the ignition switch to ON/RUN with the engine off.
3. Press and hold the Remote Keyless Entry (RKE) transmitter's LOCK and UNLOCK buttons, at the same time, for about five seconds to start the TPMS learn mode. The horn sounds twice indicating the TPMS receiver is ready and in learn mode.
4. Start with the driver side front tire. The driver side front turn signal also comes on to indicate that corner's sensor is ready to be learned.
5. Remove the valve cap from the tire's valve stem. Activate the TPMS sensor by increasing or decreasing the tire's air pressure for about eight seconds. The horn chirp, can take up to 30 seconds to sound. It chirps one time and then all the turn signals flash one time to confirm the sensor identification code has been matched to the tire/wheel position.

Downloaded from www.Manualslib.com manuals search engine

6. The passenger side front turn signal comes on to indicate that corner sensor is ready to be learned. Proceed to the passenger side front tire and repeat the procedure in Step 5.
7. The passenger side rear turn signal comes on to indicate that corner sensor is ready to be learned. Proceed to the passenger side rear tire and repeat the procedure in Step 5.
8. The driver side rear turn signal comes on to indicate that corner sensor is ready to be learned. Proceed to the driver side rear tire, and repeat the procedure in Step 5.
9. After hearing the single horn chirp for the driver side rear tire, two additional horn chirps sound to indicate the tire learning process is done. Turn the ignition switch to LOCK/OFF.

   If no tires are learned after entering the TPMS learn mode, or if communication with the receiver stops, or if the time limit has expired, turn the ignition switch to LOCK/OFF and start over beginning with Step 2.
10. Set all four tires to the recommended air pressure level as indicated on the Tire and Loading Information label.
11. Put the valve caps back on the valve stems.

TPMS Matching Process for Vehicles without Remote Keyless Entry (RKE)

1. Set the parking brake.
2. Turn the ignition switch to ON/RUN with the engine off.
3. Using the Driver Information Center (DIC), press the INFO and Set/Reset buttons at the same time for about one second. Then press and release the INFO button until the TIRE LEARN? message displays.
4. Press and hold the Set/Reset DIC button for approximately three seconds to start the TPMS learn mode. The horn sounds twice to indicate the TPMS receiver is ready and the TIRE LEARN ON message displays. The driver side front turn signal also comes on to indicate that corner sensor is ready to be learned.
5. Start with the driver side front tire.
6. Remove the valve cap from the tire's valve stem. Activate the TPMS sensor by increasing or decreasing the tire's air pressure for about eight seconds. The horn chirp, can take up to 30 seconds to sound. It chirps one time and then all the turn signals flash one time to confirm the sensor identification code has been matched to the tire/wheel position.

Downloaded from www.Manualslib.com manuals search engine

7. The passenger side front turn signal comes on to indicate that corner sensor is ready to be learned. Proceed to the passenger side front tire and repeat the procedure in Step 6.
8. The passenger side rear turn signal comes on to indicate that corner sensor is ready to be learned. Proceed to the passenger side rear tire and repeat the procedure in Step 6.
9. The driver side rear turn signal comes on to indicate that corner sensor is ready to be learned. Proceed to the driver side rear tire, and repeat the procedure in Step 6.
10. After hearing the single horn chirp for the driver side rear tire, two additional horn chirps sound to indicate the tire learning process is done. The LEARN COMPLETE message displays if all four tire positions are learned. Turn the ignition switch to LOCK/OFF.

    If no tires are learned after entering the TPMS learn mode, or if communication with the receiver stops, or if the time limit has expired, the TIRE LEARN? message displays on the DIC. Turn the ignition switch to LOCK/OFF and start over beginning with Step 2.
11. Set all four tires to the recommended air pressure level as indicated on the Tire and Loading Information label.
12. Put the valve caps back on the valve stems.

Tire Inspection and Rotation

We recommend that you regularly inspect your vehicle's tires for signs of wear or damage. See *When It Is Time for New Tires on page 6-63* for more information.

Tires should be rotated every 5,000 to 8,000 miles (8 000 to 13 000 km). See *Scheduled Maintenance on page 7-3*.

The purpose of a regular tire rotation is to achieve a uniform wear for all tires on the vehicle. This will ensure that your vehicle continues to perform most like it did when the tires were new.

Downloaded from www.Manualslib.com manuals search engine

Any time you notice unusual wear, rotate the tires as soon as possible and check wheel alignment. Also check for damaged tires or wheels. See *When It Is Time for New Tires on page 6-63* and *Wheel Replacement on page 6-67*.

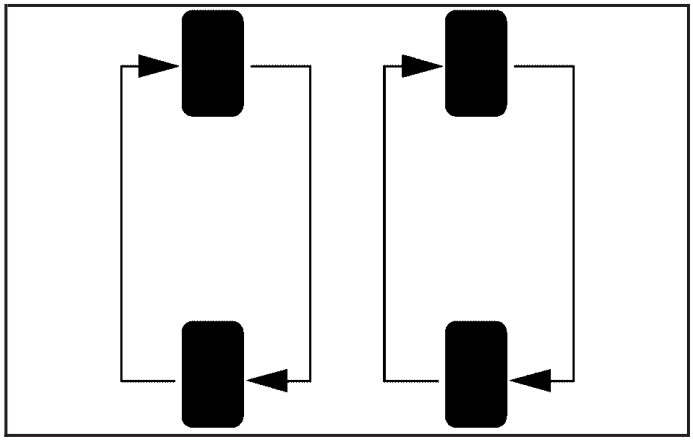

If your vehicle has Goodyear Eagle F1-GS2 P245/45R18 or Goodyear Eagle F1 A/S P245/45R18 size tires, they are directional tires and must roll in a certain direction for the best overall performance. The direction is shown by an arrow on the tire sidewall. Because these tires are directional, they should be rotated as shown here. These tires should only be moved from front to rear and rear to front on the same side of the vehicle.

After the tires have been rotated, adjust the front and rear inflation pressures as shown on the Tire and Loading Information label. See *Inflation - Tire Pressure on page 6-54* and *Loading the Vehicle on page 5-22*.

Reset the Tire Pressure monitor System. See *Tire Pressure Monitor Operation on page 6-56*.

Make certain that all wheel nuts are properly tightened. See “Wheel Nut Torque” under *Capacities and Specifications on page 6-104*.

⚠ WARNING:

Rust or dirt on a wheel, or on the parts to which it is fastened, can make wheel nuts become loose after a time. The wheel could come off and cause a crash. When you change a wheel, remove any rust or dirt from places where the wheel attaches to the vehicle. In an emergency, you can use a cloth or a paper towel to do this; but be sure to use a scraper or wire brush later, if you need to, to get all the rust or dirt off.

Downloaded from www.Manualslib.com manuals search engine

When It Is Time for New Tires

Various factors, such as maintenance, temperatures, driving speeds, vehicle loading, and road conditions influence when you need new tires.

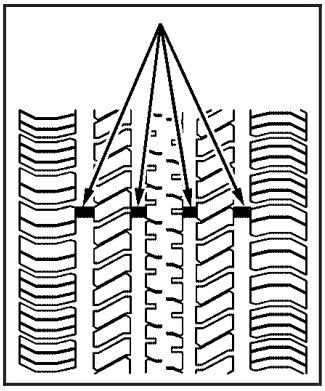

One way to tell when it is time for new tires is to check the treadwear indicators, which will appear when your tires have only 1/16 inch (1.6 mm) or less of tread remaining.

You need new tires if any of the following statements are true:

- You can see the indicators at three or more places around the tire.
- You can see cord or fabric showing through the tire's rubber.
- The tread or sidewall is cracked, cut, or snagged deep enough to show cord or fabric.
- The tire has a bump, bulge, or split.
- The tire has a puncture, cut, or other damage that cannot be repaired well because of the size or location of the damage.

The rubber in tires degrades over time, even if they are not being used. This is also true for the spare tire, if your vehicle has one. Multiple conditions affect how fast this aging takes place, including temperatures, loading conditions, and inflation pressure maintenance. With proper care and maintenance tires will typically wear out before they degrade due to age. If you are unsure about the need to replace your tires as they get older, consult the tire manufacturer for more information.

Downloaded from www.Manualslib.com manuals search engine

Buying New Tires

GM has developed and matched specific tires for your vehicle. The original equipment tires installed on your vehicle, when it was new, were designed to meet General Motors Tire Performance Criteria Specification (TPC spec) system rating. If you need replacement tires, GM strongly recommends that you get tires with the same TPC Spec rating. This way, your vehicle will continue to have tires that are designed to give the same performance and vehicle safety, during normal use, as the original tires.

GM's exclusive TPC Spec system considers over a dozen critical specifications that impact the overall performance of your vehicle, including brake system performance, ride and handling, traction control, and tire pressure monitoring performance. GM's TPC Spec number is molded onto the tire's sidewall near the tire size. If the tires have an all-season tread design, the TPC spec number will be followed by a MS, for mud and snow. See *Tire Sidewall Labeling on page 6-49* for additional information.

GM recommends replacing tires in sets of four. This is because uniform tread depth on all tires will help keep your vehicle performing most like it did when the tires were new. Replacing less than a full set of tires can affect the braking and handling performance of your vehicle. See *Tire Inspection and Rotation on page 6-61* for information on proper tire rotation.

⚠ WARNING:

Mixing tires could cause you to lose control while driving. If you mix tires of different sizes, brands, or types (radial and bias-belted tires) the vehicle may not handle properly, and you could have a crash. Using tires of different sizes, brands, or types may also cause damage to your vehicle. Be sure to use the correct size, brand, and type of tires on your vehicle's wheels.

Downloaded from www.Manualslib.com manuals search engine

⚠ WARNING:

If you use bias-ply tires on the vehicle, the wheel rim flanges could develop cracks after many miles of driving. A tire and/or wheel could fail suddenly, causing a crash. Use only radial-ply tires with the wheels on the vehicle.

If you must replace your vehicle's tires with those that do not have a TPC Spec number, make sure they are the same size, load range, speed rating, and construction type (radial and bias-belted tires) as your vehicle's original tires.

Vehicles that have a tire pressure monitoring system could give an inaccurate low-pressure warning if non-TPC Spec rated tires are installed on your vehicle. Non-TPC Spec rated tires may give a low-pressure warning that is higher or lower than the proper warning level you would get with TPC Spec rated tires. See *Tire Pressure Monitor System on page 6-55*.

Your vehicle's original equipment tires are listed on the Tire and Loading Information label. See *Loading the Vehicle on page 5-22*, for more information about the Tire and Loading Information label and its location on your vehicle.

Different Size Tires and Wheels

If you add wheels or tires that are a different size than your original equipment wheels and tires, this may affect the way your vehicle performs, including its braking, ride and handling characteristics, stability, and resistance to rollover. Additionally, if your vehicle has electronic systems such as, antilock brakes, traction control, and electronic stability control, the performance of these systems can be affected.

⚠ WARNING:

If you add different sized wheels, your vehicle may not provide an acceptable level of performance and safety if tires not recommended for those wheels are selected. You may increase the chance that you will crash and suffer serious injury. Only use GM specific wheel and tire systems developed for your vehicle, and have them properly installed by a GM certified technician.

See *Buying New Tires on page 6-64* and *Accessories and Modifications on page 6-3* for additional information.

Downloaded from www.Manualslib.com manuals search engine

Uniform Tire Quality Grading

Quality grades can be found where applicable on the tire sidewall between tread shoulder and maximum section width. For example:

Treadwear 200 Traction AA Temperature A

The following information relates to the system developed by the United States National Highway Traffic Safety Administration (NHTSA), which grades tires by treadwear, traction, and temperature performance. This applies only to vehicles sold in the United States. The grades are molded on the sidewalls of most passenger car tires. The Uniform Tire Quality Grading (UTQG) system does not apply to deep tread, winter-type snow tires, space-saver, or temporary use spare tires, tires with nominal rim diameters of 10 to 12 inches (25 to 30 cm), or to some limited-production tires.

While the tires available on General Motors passenger cars and light trucks may vary with respect to these grades, they must also conform to federal safety requirements and additional General Motors Tire Performance Criteria (TPC) standards.

Treadwear

The treadwear grade is a comparative rating based on the wear rate of the tire when tested under controlled conditions on a specified government test course. For example, a tire graded 150 would wear one and a half (1.5) times as well on the government course as a tire graded 100. The relative performance of tires depends upon the actual conditions of their use, however, and may depart significantly from the norm due to variations in driving habits, service practices, and differences in road characteristics and climate.

Traction – AA, A, B, C

The traction grades, from highest to lowest, are AA, A, B, and C. Those grades represent the tire's ability to stop on wet pavement as measured under controlled conditions on specified government test surfaces of asphalt and concrete. A tire marked C may have poor traction performance.

Downloaded from www.Manualslib.com manuals search engine

Temperature – A, B, C

The temperature grades are A (the highest), B, and C, representing the tire's resistance to the generation of heat and its ability to dissipate heat when tested under controlled conditions on a specified indoor laboratory test wheel. Sustained high temperature can cause the material of the tire to degenerate and reduce tire life, and excessive temperature can lead to sudden tire failure. The grade C corresponds to a level of performance which all passenger car tires must meet under the Federal Motor Vehicle Safety Standard No. 109. Grades B and A represent higher levels of performance on the laboratory test wheel than the minimum required by law. It should be noted that the temperature grade for this tire is established for a tire that is properly inflated and not overloaded. Excessive speed, underinflation, or excessive loading, either separately or in combination, can cause heat buildup and possible tire failure.

Wheel Alignment and Tire Balance

The tires and wheels on your vehicle were aligned and balanced carefully at the factory to give you the longest tire life and best overall performance. Adjustments to wheel alignment and tire balancing will not be necessary on a regular basis. However, if you notice unusual tire wear or your vehicle pulling to one side or the other, the alignment might need to be checked. If you notice your vehicle vibrating when driving on a smooth road, the tires and wheels might need to be rebalanced. See your dealer/retailer for proper diagnosis.

Wheel Replacement

Replace any wheel that is bent, cracked, or badly rusted or corroded. If wheel nuts keep coming loose, the wheel, wheel bolts and wheel nuts should be replaced. If the wheel leaks air, replace it (except some aluminum wheels, which can sometimes be repaired). See your dealer/retailer if any of these conditions exist.

Your dealer/retailer will know the kind of wheel you need.

Each new wheel should have the same load-carrying capacity, diameter, width, offset and be mounted the same way as the one it replaces.

Downloaded from www.Manualslib.com manuals search engine

If you need to replace any of your wheels, wheel bolts, wheel nuts, or Tire Pressure Monitor System (TPMS) sensors, replace them only with new GM original equipment parts. This way, you will be sure to have the right wheel, wheel bolts, wheel nuts, and TPMS sensors for your vehicle.

⚠ WARNING:

Using the wrong replacement wheels, wheel bolts, or wheel nuts on your vehicle can be dangerous. It could affect the braking and handling of your vehicle, make your tires lose air and make you lose control. You could have a collision in which you or others could be injured. Always use the correct wheel, wheel bolts, and wheel nuts for replacement.

Notice: **The wrong wheel can also cause problems with bearing life, brake cooling, speedometer or odometer calibration, headlamp aim, bumper height, vehicle ground clearance, and tire clearance to the body and chassis.**

⚠ WARNING:

Rust or dirt on a wheel, or on the parts to which it is fastened, can make wheel nuts become loose after a time. The wheel could come off and cause a crash. When you change a wheel, remove any rust or dirt from places where the wheel attaches to the vehicle. In an emergency, you can use a cloth or a paper towel to do this; but be sure to use a scraper or wire brush later, if you need to, to get all the rust or dirt off.

Downloaded from www.Manualslib.com manuals search engine

⚠ WARNING:

Never use oil or grease on studs or the threads of the wheel nuts. If you do, the wheel nuts might come loose and the wheel could fall off, causing a crash.

⚠ WARNING:

Incorrect wheel nuts or improperly tightened wheel nuts can cause the wheel to become loose and even come off. This could lead to a crash. Be sure to use the correct wheel nuts. If you have to replace them, be sure to get new GM original equipment wheel nuts.

Notice: **Improperly tightened wheel nuts can lead to brake pulsation and rotor damage. To avoid expensive brake repairs, evenly tighten the wheel nuts in the proper sequence and to the proper torque specification.**

Used Replacement Wheels

⚠ WARNING:

Putting a used wheel on the vehicle is dangerous. You cannot know how it has been used or how far it has been driven. It could fail suddenly and cause a crash. If you have to replace a wheel, use a new GM original equipment wheel.

Downloaded from www.Manualslib.com manuals search engine

Tire Chains

⚠ WARNING:

Do not use tire chains. There is not enough clearance. Tire chains used on a vehicle without the proper amount of clearance can cause damage to the brakes, suspension, or other vehicle parts. The area damaged by the tire chains could cause you to lose control of the vehicle and you or others may be injured in a crash. Use another type of traction device only if its manufacturer recommends it for use on the vehicle and tire size combination and road conditions. Follow that manufacturer's instructions. To help avoid damage to the vehicle, drive slowly, re-adjust or remove the device if it is contacting the vehicle, and do not spin the wheels. If you do find traction devices that will fit, install them on the rear tires.

If a Tire Goes Flat

Your vehicle has a tire sealant and compressor kit. See *Tire Sealant and Compressor Kit (Without Selector Switch) on page 6-71* or *Tire Sealant and Compressor Kit (With Selector Switch) on page 6-80*. There is no spare tire, no tire changing equipment, and no place to store a tire.

It is unusual for a tire to blow out while you are driving, especially if you maintain your tires properly. See *Tires on page 6-47*. If air goes out of a tire, it is much more likely to leak out slowly. But, if you should ever have a blow out, here are a few tips about what to expect and what to do:

If a front tire fails, the flat tire will create a drag that pulls the vehicle toward that side. Take your foot off the accelerator pedal and grip the steering wheel firmly. Steer to maintain lane position, and then gently brake to a stop well out of the traffic lane.

A rear blow out, particularly on a curve, acts much like a skid and may require the same correction you would use in a skid. In any rear blow out, remove your foot from the accelerator pedal. Get the vehicle under control by steering the way you want the vehicle to go. It may be very bumpy and noisy, but you can still steer. Gently brake to a stop, well off the road if possible.

Downloaded from www.Manualslib.com manuals search engine

If a tire goes flat, avoid further tire and wheel damage by driving slowly to a level place and stopping. Then do this:

1. Turn on the hazard warning flashers. See *Hazard Warning Flashers on page 4-3*.
2. Park your vehicle. If your vehicle has an automatic transmission, set the parking brake firmly and put the shift lever in P (Park). See *Shifting Into Park (Automatic Transmission) on page 3-26*. If your vehicle has a manual transmission, move the shift lever to R (Reverse) and set the parking brake firmly. See *Parking the Vehicle (Manual Transmission) on page 3-27* for additional information.
3. Turn off the engine.
4. Inspect the flat tire.

If the tire has been separated from the wheel, has damaged sidewalls, or has a puncture larger than a ¼ inch (6 mm), the tire is too severely damaged for the tire sealant and compressor kit to be effective. See *Roadside Assistance Program on page 8-7*.

If the tire has a puncture less than a ¼ inch (6 mm) in the tread area of the tire, see *Tire Sealant and Compressor Kit (Without Selector Switch) on page 6-71* or *Tire Sealant and Compressor Kit (With Selector Switch) on page 6-80*.

Tire Sealant and Compressor Kit (Without Selector Switch)

System Identification

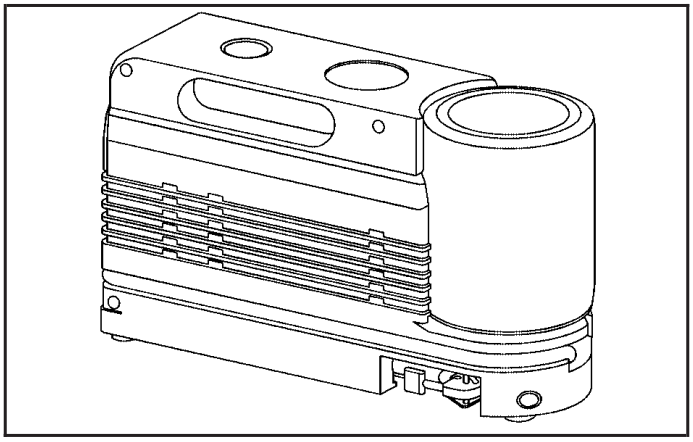

If the vehicle has the tire sealant and compressor kit shown above, see the operating instructions that follow.

Downloaded from www.Manualslib.com manuals search engine

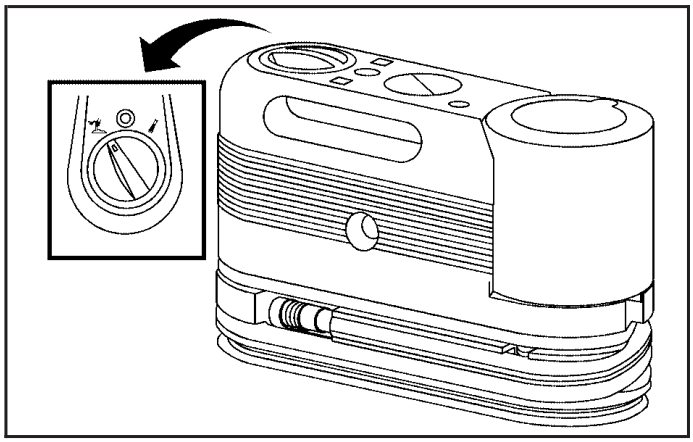

If the vehicle has the tire sealant and compressor kit shown above, follow the operating instructions under “Tire Sealant and Compressor Kit (With Selector Switch).

⚠ WARNING:

Idling a vehicle in an enclosed area with poor ventilation is dangerous. Engine exhaust may enter the vehicle. Engine exhaust contains Carbon Monoxide (CO) which cannot be seen or smelled. It can cause unconsciousness and even death. Never run the engine in an enclosed area that has no fresh air ventilation. For more information, see *Engine Exhaust on page 3-28*.

⚠ WARNING:

Over-inflating a tire could cause the tire to rupture and you or others could be injured. Be sure to read and follow the tire sealant and compressor kit instructions and inflate the tire to its recommended pressure. Do not exceed the recommended pressure.

Downloaded from www.Manualslib.com manuals search engine

⚠ WARNING:

Storing the tire sealant and compressor kit or other equipment in the passenger compartment of the vehicle could cause injury. In a sudden stop or collision, loose equipment could strike someone. Store the tire sealant and compressor kit in its original location.

If this vehicle has a tire sealant and compressor kit, there may not be a spare tire, tire changing equipment, and on some vehicles there may not be a place to store a tire.

The tire sealant and compressor can be used to temporarily seal punctures up to ¼ inch (6 mm) in the tread area of the tire. It can also be used to inflate an under inflated tire.

If the tire has been separated from the wheel, has damaged sidewalls, or has a large puncture, the tire is too severely damaged for the tire sealant and compressor kit to be effective. See *Roadside Assistance Program on page 8-7*.

Read and follow all of the tire sealant and compressor kit instructions.

The kit includes:

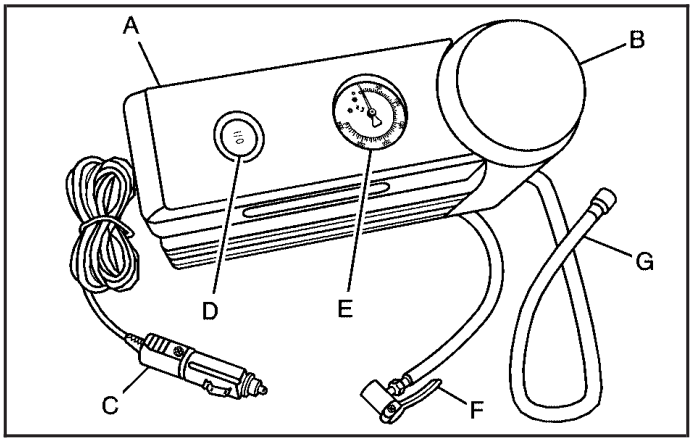

A. Air Compressor
B. Tire Sealant Canister
C. Power Plug
D. On/Off Button
E. Pressure Gage
F. Air Only Hose (Black)
G. Sealant/Air Hose (Clear)

Downloaded from www.Manualslib.com manuals search engine

Tire Sealant

Read and follow the safe handling instructions on the label adhered to the sealant canister.

Check the tire sealant expiration date on the sealant canister. The sealant canister should be replaced before its expiration date. Replacement sealant canisters are available at your local dealer/retailer. See “Removal and Installation of the Sealant Canister” following.

There is only enough sealant to seal one tire. After usage, the sealant canister and sealant/air hose assembly must be replaced. See “Removal and Installation of the Sealant Canister” following.

Using the Tire Sealant and Compressor Kit to Temporarily Seal and Inflate a Punctured Tire

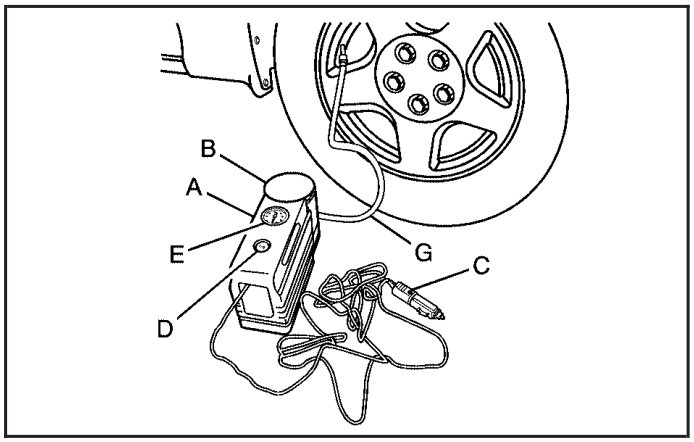

When using the tire sealant and compressor kit during cold temperatures, warm the kit in a heated environment for 5 minutes. This will help to inflate the tire faster.

Downloaded from www.Manualslib.com manuals search engine

Always do a safety check first. See *If a Tire Goes Flat on page 6-70*. Do not remove any objects that have penetrated the tire.

1. Remove the tire sealant and compressor kit from its storage location. See *Tire Sealant and Compressor Kit Storage on page 6-89*.

   Make sure the on/off button (D) is in the off (O) position.

2. Unwrap the sealant/air hose (G) and the power plug (C).

3. Place the kit on the ground.

   Make sure the tire valve stem is positioned close to the ground so the hose will reach it.

4. Remove the valve stem cap from the flat tire by turning it counterclockwise.

5. Attach the sealant/air hose (G) onto the tire valve stem. Turn it clockwise until it is tight.

6. Plug the power plug (C) into the accessory power outlet in the vehicle. Unplug all items from other accessory power outlets. See *Accessory Power Outlet(s) on page 4-12*.

   If the vehicle has an accessory power outlet, do not use the cigarette lighter.

   If the vehicle only has a cigarette lighter, use the cigarette lighter.

   Do not pinch the power plug cord in the door or window.

7. Start the vehicle. The vehicle must be running while using the air compressor.

8. Press the on/off (D) button to turn the tire sealant and compressor kit on.

   The compressor will inject sealant and air into the tire.

   The pressure gage (E) will initially show a high pressure while the compressor pushes the sealant into the tire. Once the sealant is completely dispersed into the tire, the pressure will quickly drop and start to rise again as the tire inflates with air only.

Downloaded from www.Manualslib.com manuals search engine

9. Inflate the tire to the recommended inflation pressure using the pressure gage (E). The recommended inflation pressure can be found on the Tire and Loading Information label. See *Inflation - Tire Pressure on page 6-54*.

   The pressure gage (E) may read higher than the actual tire pressure while the compressor is on. Turn the compressor off to get an accurate pressure reading. The compressor may be turned on/off until the correct pressure is reached.

Notice: **If the recommended pressure cannot be reached after approximately 25 minutes, the vehicle should not be driven farther. The tire is too severely damaged and the tire sealant and compressor kit cannot inflate the tire. Remove the power plug from the accessory power outlet and unscrew the inflating hose from the tire valve. See *Roadside Assistance Program on page 8-7*.**

10. Press the on/off button (D) to turn the tire sealant and compressor kit off.

    The tire is not sealed and will continue to leak air until the vehicle is driven and the sealant is distributed in the tire, therefore, Steps 11 through 17 must be done immediately after Step 10.

    Be careful while handling the tire sealant and compressor kit as it could be warm after usage.

11. Unplug the power plug (C) from the accessory power outlet in the vehicle.
12. Turn the sealant/air hose (G) counterclockwise to remove it from the tire valve stem.
13. Replace the tire valve stem cap.
14. Replace the sealant/air hose (G), and the power plug (C) back in their original location.

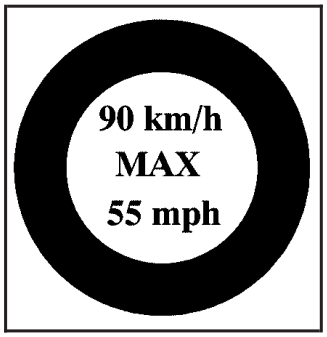

15. If the flat tire was able to inflate to the recommended inflation pressure, remove the maximum speed label from the sealant canister (B) and place it in a highly visible location.

    The label is a reminder not to exceed 55 mph (90 km/h) until the damaged tire is repaired or replaced.

16. Return the equipment to its original storage location in the vehicle.
17. Immediately drive the vehicle 5 miles (8 km) to distribute the sealant in the tire.

Downloaded from www.Manualslib.com manuals search engine

18. Stop at a safe location and check the tire pressure. Refer to Steps 1 through 11 under “Using the Tire Sealant and Compressor Kit without Sealant to Inflate a Tire (Not Punctured).”

    If the tire pressure has fallen more than 10 psi (68 kPa) below the recommended inflation pressure, stop driving the vehicle. The tire is too severely damaged and the tire sealant cannot seal the tire. See *Roadside Assistance Program on page 8-7*.

    If the tire pressure has not dropped more than 10 psi (68 kPa) from the recommended inflation pressure, inflate the tire to the recommended inflation pressure.

19. Wipe off any sealant from the wheel, tire or vehicle.
20. Dispose of the used sealant canister (B) and sealant/air hose (G) assembly at a local dealer/retailer or in accordance with local state codes and practices.
21. Replace it with a new canister available from your dealer/retailer.
22. After temporarily sealing a tire using the tire sealant and compressor kit, take the vehicle to an authorized dealer/retailer within a 100 miles (161 km) of driving to have the tire repaired or replaced.

Using the Tire Sealant and Compressor Kit without Sealant to Inflate a Tire (Not Punctured)

To use the air compressor to inflate a tire with air only and not sealant:

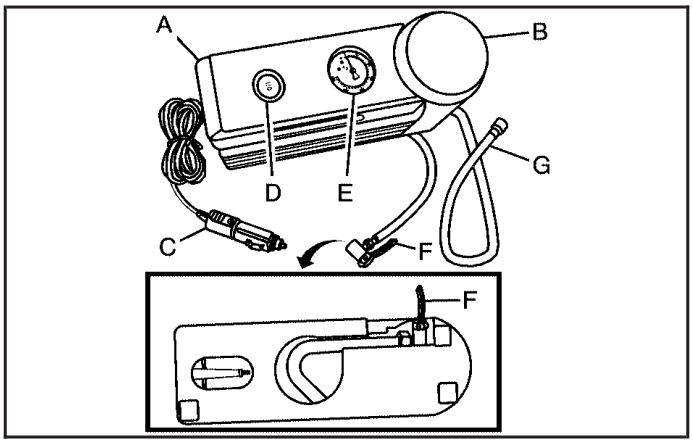

Always do a safety check first. See *If a Tire Goes Flat on page 6-70*.

1. Remove the tire sealant and compressor kit from its storage location. See *Tire Sealant and Compressor Kit Storage on page 6-89*.
2. Unlock the air only hose (F) from the sealant canister (B) by pulling up on the lever.

Downloaded from www.Manualslib.com manuals search engine

3. Pull the air only hose (F) from the sealant canister (B).
4. Remove the power plug (C) from the air compressor (A).
5. Place the kit on the ground.

   Make sure the tire valve stem is positioned close to the ground so the hose will reach it.
6. Remove the tire valve stem cap by turning it counterclockwise.
7. Attach the air only hose (F) onto the tire valve stem and press the lever down to secure it.
8. Plug the power plug (C) into the accessory power outlet in the vehicle. Unplug all items from other accessory power outlets. See *Accessory Power Outlet(s) on page 4-12*.

   If the vehicle has an accessory power outlet, do not use the cigarette lighter.

   If the vehicle only has a cigarette lighter, use the cigarette lighter.

   Do not pinch the power plug cord in the door or window.
9. Start the vehicle. The vehicle must be running while using the air compressor.
10. Press the on/off (D) button to turn the compressor on.

    The compressor will inflate the tire with air only.
11. Inflate the tire to the recommended inflation pressure using the pressure gage (E). The recommended inflation pressure can be found on the Tire and Loading Information label. See *Inflation - Tire Pressure on page 6-54*.

    The pressure gage (E) may read higher than the actual tire pressure while the compressor is on. Turn the compressor off to get an accurate reading. The compressor may be turned on/off until the correct pressure is reached.
12. Press the on/off button (D) to turn the tire sealant and compressor kit off.

    Be careful while handling the tire sealant and compressor kit as it could be warm after usage.
13. Unplug the power plug (C) from the accessory power outlet in the vehicle.
14. Disconnect the air only hose (F) from the tire valve stem, by turning it counterclockwise, and replace the tire valve stem cap.
15. Replace the air only hose (F) and the power plug (C) back in its original location.
16. Place the equipment in the original storage location in the vehicle.

Downloaded from www.Manualslib.com manuals search engine

Removal and Installation of the Sealant Canister

To remove the sealant canister:

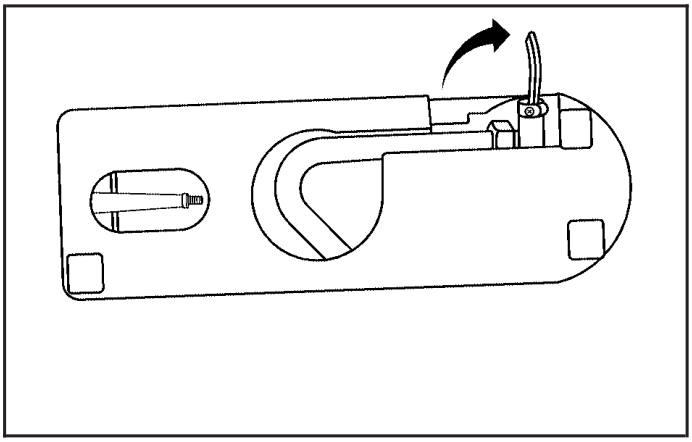

1. Unlock the air only hose (F) from the sealant canister (B) by pulling up on the lever.
2. Pull the air only hose (F) from the sealant canister (B).
3. Unwrap the sealant/air hose (F) from the compressor (A).

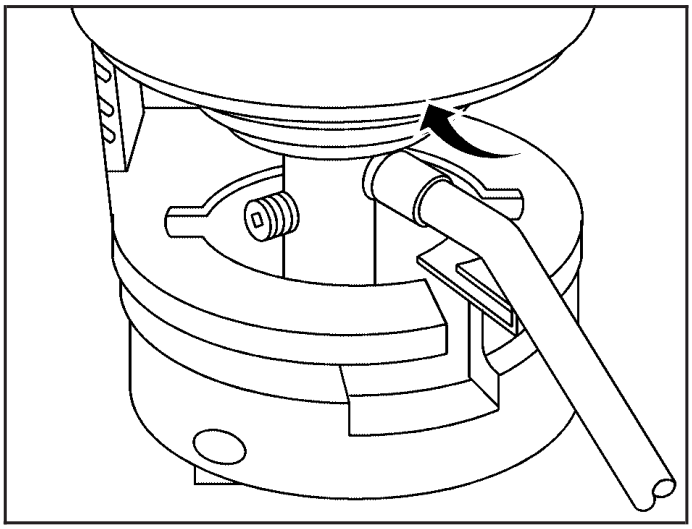

4. Turn the sealant canister (B) so the inflator filling hose is aligned with the slot in the compressor.
5. Lift the sealant canister (B) from the compressor and replace with a new sealant canister. See your dealer/retailer for more information.

Downloaded from www.Manualslib.com manuals search engine

To install a new sealant canister:

1. Align the sealant/air hose (F) with the slot in the air compressor.
2. Push the sealant canister (B) down and turn it clockwise.
3. Wrap the sealant/air hose (F) around the air compressor channel to stow it in its original location.
4. Push the air compressor inflator hose (F) onto the sealant canister inlet and push the lever down.

Tire Sealant and Compressor Kit (With Selector Switch)

System Identification

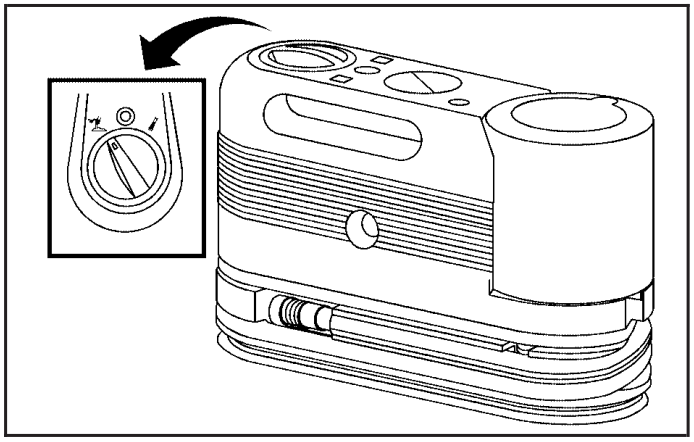

If the vehicle has the tire sealant and compressor kit shown above, see the operating instructions that follow.

Downloaded from www.Manualslib.com manuals search engine

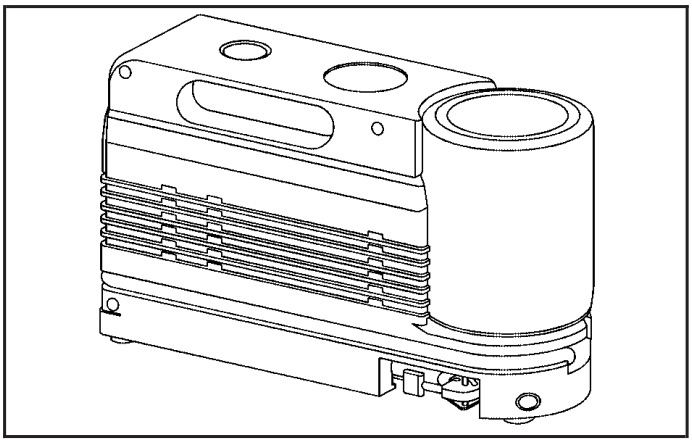

If the vehicle has the tire sealant and compressor kit shown above, follow the operating instructions under “Tire Sealant and Compressor Kit (Without Selector Switch).

⚠ WARNING:

Idling a vehicle in an enclosed area with poor ventilation is dangerous. Engine exhaust may enter the vehicle. Engine exhaust contains Carbon Monoxide (CO) which cannot be seen or smelled. It can cause unconsciousness and even death. Never run the engine in an enclosed area that has no fresh air ventilation. For more information, see *Engine Exhaust on page 3-28*.

⚠ WARNING:

Over-inflating a tire could cause the tire to rupture and you or others could be injured. Be sure to read and follow the tire sealant and compressor kit instructions and inflate the tire to its recommended pressure. Do not exceed the recommended pressure.

Downloaded from www.Manualslib.com manuals search engine

⚠ WARNING:

Storing the tire sealant and compressor kit or other equipment in the passenger compartment of the vehicle could cause injury. In a sudden stop or collision, loose equipment could strike someone. Store the tire sealant and compressor kit in its original location.

If this vehicle has a tire sealant and compressor kit, there may not be a spare tire, tire changing equipment, and on some vehicles there may not be a place to store a tire.

The tire sealant and compressor can be used to temporarily seal punctures up to ¼ inch (6 mm) in the tread area of the tire. It can also be used to inflate an under inflated tire.

If the tire has been separated from the wheel, has damaged sidewalls, or has a large puncture, the tire is too severely damaged for the tire sealant and compressor kit to be effective. See *Roadside Assistance Program on page 8-7*.

Read and follow all of the tire sealant and compressor kit instructions.

The kit includes:

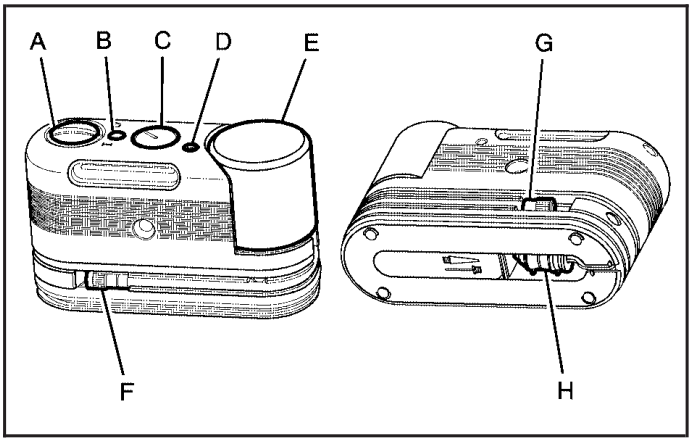

A. Selector Switch (Sealant/Air or Air Only)
B. On/Off Button
C. Pressure Gage
D. Pressure Deflation Button
E. Tire Sealant Canister
F. Sealant/Air Hose (Clear)
G. Air Only Hose (Black)
H. Power Plug

Downloaded from www.Manualslib.com manuals search engine

Tire Sealant

Read and follow the safe handling instructions on the label adhered to the sealant canister.

Check the tire sealant expiration date on the sealant canister. The sealant canister should be replaced before its expiration date. Replacement sealant canisters are available at your local dealer/retailer. See “Removal and Installation of the Sealant Canister” following.

There is only enough sealant to seal one tire. After usage, the sealant canister and sealant/air hose assembly must be replaced. See “Removal and Installation of the Sealant Canister” following.

Using the Tire Sealant and Compressor Kit to Temporarily Seal and Inflate a Punctured Tire

Follow the directions closely for correct sealant usage.

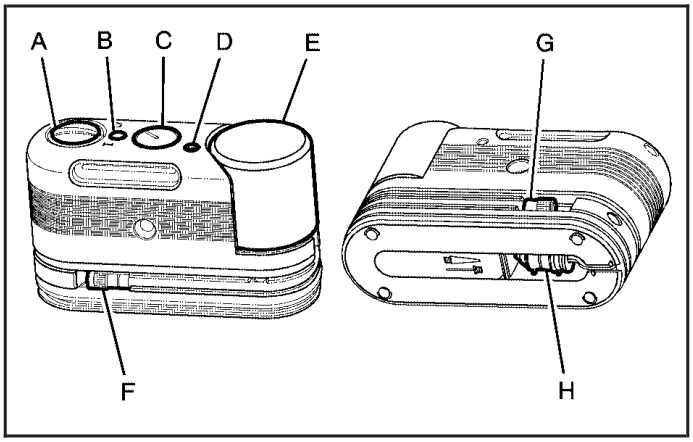

When using the tire sealant and compressor kit during cold temperatures, warm the kit in a heated environment for 5 minutes. This will help to inflate the tire faster.

Downloaded from www.Manualslib.com manuals search engine

Always do a safety check first. See *If a Tire Goes Flat on page 6-70*. Do not remove any objects that have penetrated the tire.

1. Remove the tire sealant and compressor kit from its storage location. See *Tire Sealant and Compressor Kit Storage on page 6-89*.
2. Unwrap the sealant/air hose (F) and the power plug (H).
3. Place the kit on the ground.
4. Remove the valve stem cap from the flat tire by turning it counterclockwise.
5. Attach the sealant/air hose (F) onto the tire valve stem. Turn it clockwise until it is tight.
6. Plug the power plug (H) into the accessory power outlet in the vehicle. Unplug all items from other accessory power outlets. See *Accessory Power Outlet(s) on page 4-12*.

   If the vehicle has an accessory power outlet, do not use the cigarette lighter.

   If the vehicle only has a cigarette lighter, use the cigarette lighter.

   Do not pinch the power plug cord in the door or window.
7. Start the vehicle. The vehicle must be running while using the air compressor.
8. Turn the selector switch (A) counterclockwise to the Sealant + Air position.
9. Press the on/off (B) button to turn the tire sealant and compressor kit on.

   The compressor will inject sealant and air into the tire.

   The pressure gage (C) will initially show a high pressure while the compressor pushes the sealant into the tire. Once the sealant is completely dispersed into the tire, the pressure will quickly drop and start to rise again as the tire inflates with air only.

Downloaded from www.Manualslib.com manuals search engine

10. Inflate the tire to the recommended inflation pressure using the pressure gage (C). The recommended inflation pressure can be found on the Tire and Loading Information label. See *Inflation - Tire Pressure on page 6-54*.

    The pressure gage (C) may read higher than the actual tire pressure while the compressor is on. Turn the compressor off to get an accurate pressure reading. The compressor may be turned on/off until the correct pressure is reached.

Notice: **If the recommended pressure cannot be reached after approximately 25 minutes, the vehicle should not be driven farther. The tire is too severely damaged and the tire sealant and compressor kit cannot inflate the tire. Remove the power plug from the accessory power outlet and unscrew the inflating hose from the tire valve. See *Roadside Assistance Program on page 8-7*.**

11. Press the on/off button (B) to turn the tire sealant and compressor kit off.

    The tire is not sealed and will continue to leak air until the vehicle is driven and the sealant is distributed in the tire, therefore, Steps 12 through 18 must be done immediately after Step 11.

    Be careful while handling the tire sealant and compressor kit as it could be warm after usage.

12. Unplug the power plug (H) from the accessory power outlet in the vehicle.

13. Turn the sealant/air hose (F) counterclockwise to remove it from the tire valve stem.

14. Replace the tire valve stem cap.

15. Replace the sealant/air hose (F), and the power plug (H) back in their original location.

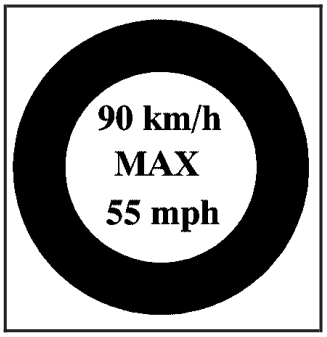

16. If the flat tire was able to inflate to the recommended inflation pressure, remove the maximum speed label from the sealant canister (E) and place it in a highly visible location.

    The label is a reminder not to exceed 55 mph (90 km/h) until the damaged tire is repaired or replaced.

17. Return the equipment to its original storage location in the vehicle.

18. Immediately drive the vehicle 5 miles (8 km) to distribute the sealant in the tire.

Downloaded from www.Manualslib.com manuals search engine

19. Stop at a safe location and check the tire pressure. Refer to Steps 1 through 11 under “Using the Tire Sealant and Compressor Kit without Sealant to Inflate a Tire (Not Punctured).”

    If the tire pressure has fallen more than 10 psi (68 kPa) below the recommended inflation pressure, stop driving the vehicle. The tire is too severely damaged and the tire sealant cannot seal the tire. See *Roadside Assistance Program on page 8-7*.

    If the tire pressure has not dropped more than 10 psi (68 kPa) from the recommended inflation pressure, inflate the tire to the recommended inflation pressure.

20. Wipe off any sealant from the wheel, tire, and vehicle.
21. Dispose of the used sealant canister (E) and sealant/air hose (F) assembly at a local dealer/retailer or in accordance with local state codes and practices.
22. Replace it with a new canister available from your dealer/retailer.
23. After temporarily sealing a tire using the tire sealant and compressor kit, take the vehicle to an authorized dealer/retailer within a 100 miles (161 km) of driving to have the tire repaired or replaced.

Using the Tire Sealant and Compressor Kit without Sealant to Inflate a Tire (Not Punctured)

To use the air compressor to inflate a tire with air only and not sealant:

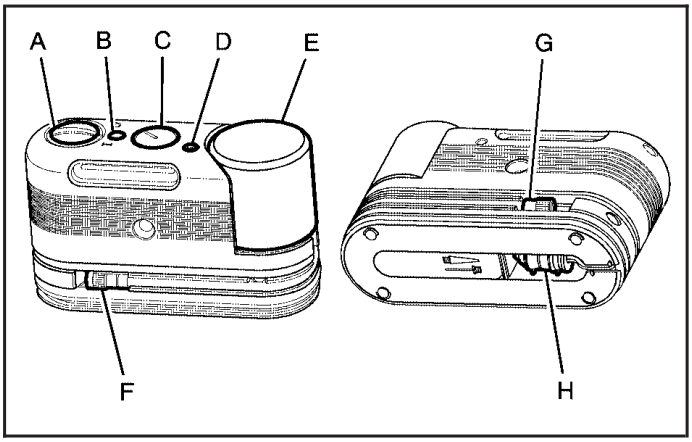

Always do a safety check first. See *If a Tire Goes Flat on page 6-70*.

1. Remove the tire sealant and compressor kit from its storage location. See *Tire Sealant and Compressor Kit Storage on page 6-89*.
2. Unwrap the air only hose (G) and the power plug (H).

Downloaded from www.Manualslib.com manuals search engine

3. Place the kit on the ground.
4. Remove the tire valve stem cap from the flat tire by turning it counterclockwise.
5. Attach the air only hose (G) onto the tire valve stem by turning it clockwise until it is tight.
6. Plug the power plug (H) into the accessory power outlet in the vehicle. Unplug all items from other accessory power outlets. See *Accessory Power Outlet(s) on page 4-12*.

   If the vehicle has an accessory power outlet, do not use the cigarette lighter.

   If the vehicle only has a cigarette lighter, use the cigarette lighter.

   Do not pinch the power plug cord in the door or window.
7. Start the vehicle. The vehicle must be running while using the air compressor.
8. Turn the selector switch (A) clockwise to the Air Only position.
9. Press the on/off (B) button to turn the compressor on.

   The compressor will inflate the tire with air only.
10. Inflate the tire to the recommended inflation pressure using the pressure gage (C). The recommended inflation pressure can be found on the Tire and Loading Information label. See *Inflation - Tire Pressure on page 6-54*.

    The pressure gage (C) may read higher than the actual tire pressure while the compressor is on. Turn the compressor off to get an accurate reading. The compressor may be turned on/off until the correct pressure is reached.

    If you inflate the tire higher than the recommended pressure you can adjust the excess pressure by pressing the pressure deflation button (D) until the proper pressure reading is reached. This option is only functional when using the air only hose (G).
11. Press the on/off button (B) to turn the tire sealant and compressor kit off.

    Be careful while handling the tire sealant and compressor kit as it could be warm after usage.
12. Unplug the power plug (H) from the accessory power outlet in the vehicle.
13. Disconnect the air only hose (G) from the tire valve stem, by turning it counterclockwise, and replace the tire valve stem cap.

Downloaded from www.Manualslib.com manuals search engine

14. Replace the air only hose (G) and the power plug (H) and cord back in its original location.
15. Place the equipment in the original storage location in the vehicle.

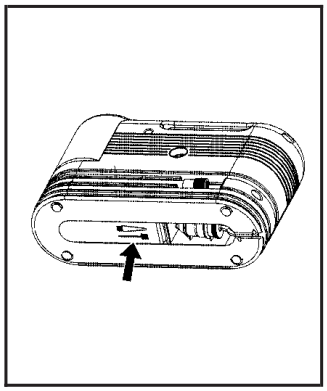

The tire sealant and compressor kit has an accessory adapter located in a compartment on the bottom of its housing that may be used to inflate air mattresses, balls, etc.

Removal and Installation of the Sealant Canister

To remove the sealant canister:

1. Unwrap the sealant hose.

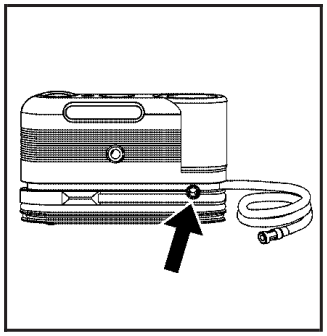

2. Press the canister release button.
3. Pull up and remove the canister.
4. Replace with a new canister which is available from your dealer/retailer.
5. Push the new canister into place.

Downloaded from www.Manualslib.com manuals search engine

Tire Sealant and Compressor Kit Storage

Convertible

The tire sealant and compressor kit is located in the driver side rear corner of the trunk.

1. Make sure the convertible top is in the up position before accessing the tire sealant and compressor kit.
2. Open the trunk. See *Trunk on page 3-10*.

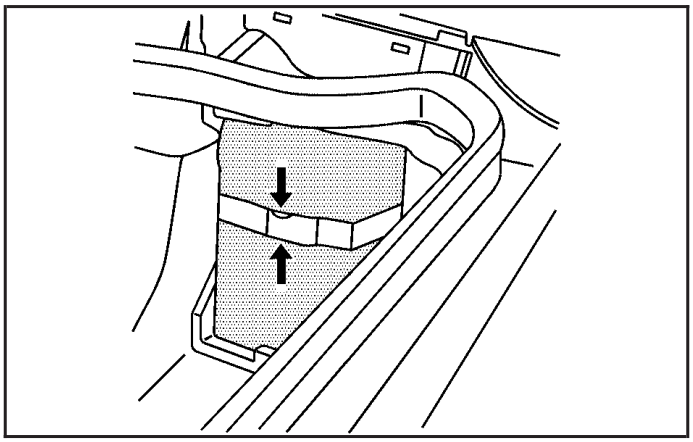

3. Squeeze the two tabs of the quick release buckle to remove the tire sealant and compressor kit.
4. Remove the tire sealant and compressor kit from its container.

To store the tire sealant and compressor kit, reverse the steps.

Downloaded from www.Manualslib.com manuals search engine

Coupe

1. Open the trunk. See *Trunk on page 3-10*.
2. Remove the rear storage compartment cover by pulling up on the handle.

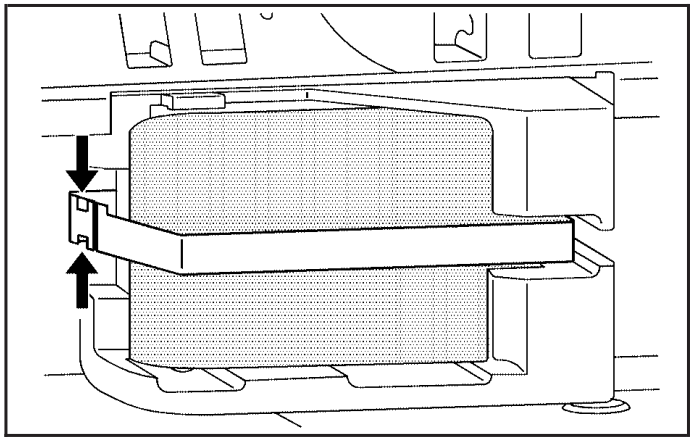

3. Squeeze the two tabs of the quick release buckle to remove the tire sealant and compressor kit.
4. Remove the tire sealant and compressor kit from its container.

To store the tire sealant and compressor kit, reverse the steps.

Appearance Care

Interior Cleaning

The vehicle's interior will continue to look its best if it is cleaned often. Although not always visible, dust and dirt can accumulate on the upholstery. Dirt can damage carpet, fabric, leather, and plastic surfaces. Regular vacuuming is recommended to remove particles from the upholstery. It is important to keep the upholstery from becoming and remaining heavily soiled. Soils should be removed as quickly as possible. The vehicle's interior may experience extremes of heat that could cause stains to set rapidly.

Lighter colored interiors may require more frequent cleaning. Use care because newspapers and garments that transfer color to home furnishings may also transfer color to the vehicle's interior.

When cleaning the vehicle's interior, only use cleaners specifically designed for the surfaces being cleaned. Permanent damage may result from using cleaners on surfaces for which they were not intended. Use glass cleaner only on glass. Remove any accidental over-spray from other surfaces immediately. To prevent over-spray, apply cleaner directly to the cleaning cloth.

Downloaded from www.Manualslib.com manuals search engine

Notice: **Using abrasive cleaners when cleaning glass surfaces on the vehicle, could scratch the glass and/or cause damage to the rear window defogger. When cleaning the glass on the vehicle, use only a soft cloth and glass cleaner.**

Many cleaners contain solvents that may become concentrated in the vehicle's breathing space. Before using cleaners, read and adhere to all safety instructions on the label. While cleaning the vehicle's interior, maintain adequate ventilation by opening the vehicle's doors and windows.

Dust may be removed from small buttons and knobs using a small brush with soft bristles.

Products that remove odors from the vehicle's upholstery and clean the vehicle's glass can be obtained from your dealer/retailer.

Do not clean the vehicle using:

- A knife or any other sharp object to remove a soil from any interior surface.
- A stiff brush. It can cause damage to the vehicle's interior surfaces.
- Heavy pressure or aggressive rubbing with a cleaning cloth. Use of heavy pressure can damage the interior and does not improve the effectiveness of soil removal.
- Laundry detergents or dishwashing soaps with degreasers can leave residue that streaks and attracts dirt. For liquid cleaners, about 20 drops per gallon (3.78 L) of water is a good guide. Use only mild, neutral-pH soaps.
- Too much cleaner that saturates the upholstery.
- Organic solvents such as naptha, alcohol, etc. that can damage the vehicle's interior.

Fabric/Carpet

Use a vacuum cleaner with a soft brush attachment frequently to remove dust and loose dirt. A canister vacuum with a beater bar in the nozzle may only be used on floor carpet and carpeted floor mats. For any soil, always try to remove it first with plain water or club soda. Before cleaning, gently remove as much of the soil as possible using one of the following techniques:

- For liquids: gently blot the remaining soil with a paper towel. Allow the soil to absorb into the paper towel until no more can be removed.
- For solid dry soils: remove as much as possible and then vacuum.

Downloaded from www.Manualslib.com manuals search engine

To clean:

1. Saturate a lint-free, clean white cloth with water or club soda.
2. Wring the cloth to remove excess moisture.
3. Start on the outside edge of the soil and gently rub toward the center. Continue cleaning, using a clean area of the cloth each time it becomes soiled.
4. Continue to gently rub the soiled area until the cleaning cloth remains clean.
5. If the soil is not completely removed, use a mild soap solution and repeat the cleaning process that was used with plain water.

If any of the soil remains, a commercial fabric cleaner or spot lifter may be necessary. When a commercial upholstery cleaner or spot lifter is to be used, test a small hidden area for colorfastness first. If the locally cleaned area gives any impression that a ring formation may result, clean the entire surface.

After the cleaning process has been completed, a paper towel can be used to blot excess moisture from the fabric or carpet.

Leather

A soft cloth dampened with water can be used to remove dust. If a more thorough cleaning is necessary, a soft cloth dampened with a mild soap solution can be used. Allow the leather to dry naturally. Do not use heat to dry. Never use steam to clean leather. Never use spot lifters or spot removers on leather. Many commercial leather cleaners and coatings that are sold to preserve and protect leather may permanently change the appearance and feel of the leather and are not recommended. Do not use silicone or wax-based products, or those containing organic solvents to clean the vehicle's interior because they can alter the appearance by increasing the gloss in a non-uniform manner. Never use shoe polish on leather.

Instrument Panel, Vinyl, and Other Plastic Surfaces

A soft cloth dampened with water may be used to remove dust. If a more thorough cleaning is necessary, a clean soft cloth dampened with a mild soap solution can be used to gently remove dust and dirt. Never use spot lifters or removers on plastic surfaces.

Downloaded from www.Manualslib.com manuals search engine

Manycommercial cleaners and coatings that are sold to preserve and protect soft plastic surfaces may permanently change the appearance and feel of the interior and are not recommended. Do not use silicone or wax-based products, or those containing organic solvents to clean the vehicle's interior because they can alter the appearance by increasing the gloss in a non-uniform manner.

Some commercial products may increase gloss on the instrument panel. The increase in gloss may cause annoying reflections in the windshield and even make it difficult to see through the windshield under certain conditions.

Care of Safety Belts

Keep belts clean and dry.

⚠ WARNING:

Do not bleach or dye safety belts. It may severely weaken them. In a crash, they might not be able to provide adequate protection. Clean safety belts only with mild soap and lukewarm water.

Weatherstrips

Silicone grease on weatherstrips will make them last longer, seal better, and not stick or squeak. Apply silicone grease with a clean cloth. During very cold, damp weather frequent application may be required. See *Recommended Fluids and Lubricants on page 7-10*.

Washing Your Vehicle

The best way to preserve the vehicle's finish is to keep it clean by washing it often.

Notice: **Certain cleaners contain chemicals that can damage the emblems or nameplates on the vehicle. Check the cleaning product label. If it states that it should not be used on plastic parts, do not use it on the vehicle or damage may occur and it would not be covered by the warranty.**

Do not wash the vehicle in direct sunlight. Use a car washing soap. Do not use cleaning agents that are petroleum based or that contain acid or abrasives, as they can damage the paint, metal or plastic on the vehicle. Approved cleaning products can be obtained from your dealer/retailer. Follow all manufacturers' directions regarding correct product usage, necessary safety precautions and appropriate disposal of any vehicle care product.

Downloaded from www.Manualslib.com manuals search engine

Rinse the vehicle well, before washing and after to remove all cleaning agents completely. If they are allowed to dry on the surface, they could stain.

Dry the finish with a soft, clean chamois or an all-cotton towel to avoid surface scratches and water spotting.

High pressure car washes may cause water to enter the vehicle. Avoid using high pressure washes closer than 12 inches (30 cm) to the surface of the vehicle. Use of power washers exceeding 1,200 psi (8 274 kPa) can result in damage or removal of paint and decals.

Cleaning Exterior Lamps/Lenses

Use only lukewarm or cold water, a soft cloth and a car washing soap to clean exterior lamps and lenses. Follow instructions under *Washing Your Vehicle on page 6-93*.

Finish Care

Occasional waxing or mild polishing of the vehicle by hand may be necessary to remove residue from the paint finish. Approved cleaning products can be obtained from your dealer/retailer.

If the vehicle has a basecoat/clearcoat paint finish, the clearcoat gives more depth and gloss to the colored basecoat. Always use waxes and polishes that are non-abrasive and made for a basecoat/clearcoat paint finish.

Notice: **Machine compounding or aggressive polishing on a basecoat/clearcoat paint finish may damage it. Use only non-abrasive waxes and polishes that are made for a basecoat/clearcoat paint finish on the vehicle.**

Foreign materials such as calcium chloride and other salts, ice melting agents, road oil and tar, tree sap, bird droppings, chemicals from industrial chimneys, etc., can damage the vehicle's finish if they remain on painted surfaces. Wash the vehicle as soon as possible. If necessary, use non-abrasive cleaners that are marked safe for painted surfaces to remove foreign matter.

Exterior painted surfaces are subject to aging, weather and chemical fallout that can take their toll over a period of years. To help keep the paint finish looking new, keep the vehicle garaged or covered whenever possible.

Protecting Exterior Bright Metal Parts

Bright metal parts should be cleaned regularly to keep their luster. Washing with water is all that is usually needed. However, chrome polish may be used on chrome or stainless steel trim, if necessary.

Downloaded from www.Manualslib.com manuals search engine

Use special care with aluminum trim. To avoid damaging protective trim, never use auto or chrome polish, steam or caustic soap to clean aluminum. A coating of wax, rubbed to high polish, is recommended for all bright metal parts.

Windshield and Wiper Blades

Clean the outside of the windshield with glass cleaner.

Clean the rubber blades using a lint free cloth or paper towel soaked with windshield washer fluid or a mild detergent. Wash the windshield thoroughly when cleaning the blades. Bugs, road grime, sap, and a buildup of vehicle wash/wax treatments may cause wiper streaking. Replace the wiper blades if they are worn or damaged.

Wipers can be damaged by:

- Extreme dusty conditions
- Sand and salt
- Heat and sun
- Snow and ice, without proper removal

Convertible Top

The vehicle's convertible top should be cleaned often. However, high pressure car washes may cause water to enter your vehicle.

When you hand wash the top, do it in partial shade. Use a mild soap, lukewarm water and a soft sponge. A chamois or cloth may leave lint on the top, and a brush can chafe the threads in the top fabric. Do not use detergents, harsh cleaners, solvents or bleaching agents.

Wet the entire vehicle and wash the top evenly to avoid spots or rings. Let the soap remain on the fabric for a few minutes. When the top is really dirty, use a mild foam-type cleaner. Thoroughly rinse the entire vehicle, then let the top dry in direct sunlight.

To protect the convertible top:

- After you wash the vehicle, make sure the top is completely dry before you lower it.
- Do not get any cleaner on the vehicle's painted finish; it could leave streaks.
- If you decide to go through an automatic car wash, ask the manager if the equipment could damage your top.

Downloaded from www.Manualslib.com manuals search engine

Aluminum or Chrome-Plated Wheels and Trim

The vehicle may have either aluminum or chrome-plated wheels.

Keep the wheels clean using a soft clean cloth with mild soap and water. Rinse with clean water. After rinsing thoroughly, dry with a soft clean towel. A wax may then be applied.

Notice: **Chrome wheels and other chrome trim may be damaged if the vehicle is not washed after driving on roads that have been sprayed with magnesium, calcium or sodium chloride. These chlorides are used on roads for conditions such as ice and dust. Always wash the vehicle's chrome with soap and water after exposure.**

Notice: **Using strong soaps, chemicals, abrasive polishes, cleaners, brushes, or cleaners that contain acid on aluminum or chrome-plated wheels, could damage the surface of the wheel(s). The repairs would not be covered by the vehicle warranty. Use only approved cleaners on aluminum or chrome-plated wheels.**

The surface of these wheels is similar to the painted surface of the vehicle. Do not use strong soaps, chemicals, abrasive polishes, abrasive cleaners, cleaners with acid, or abrasive cleaning brushes on them because they could damage the surface. Do not use chrome polish on aluminum wheels.

Notice: **Using chrome polish on aluminum wheels could damage the wheels. The repairs would not be covered by the vehicle warranty. Use chrome polish on chrome wheels only.**

Use chrome polish only on chrome-plated wheels, but avoid any painted surface of the wheel, and buff off immediately after application.

Notice: **Driving the vehicle through an automatic car wash that has silicone carbide tire cleaning brushes, could damage the aluminum or chrome-plated wheels. The repairs would not be covered by the vehicle warranty. Never drive a vehicle that has aluminum or chrome-plated wheels through an automatic car wash that uses silicone carbide tire cleaning brushes.**

Tires

To clean the tires, use a stiff brush with tire cleaner.

Notice: **Using petroleum-based tire dressing products on the vehicle may damage the paint finish and/or tires. When applying a tire dressing, always wipe off any overspray from all painted surfaces on the vehicle.**

Downloaded from www.Manualslib.com manuals search engine

Sheet Metal Damage

If the vehicle is damaged and requires sheet metal repair or replacement, make sure the body repair shop applies anti-corrosion material to parts repaired or replaced to restore corrosion protection.

Original manufacturer replacement parts will provide the corrosion protection while maintaining the vehicle warranty.

Finish Damage

Any stone chips, fractures or deep scratches in the finish should be repaired right away. Bare metal will corrode quickly and may develop into major repair expense.

Minor chips and scratches can be repaired with touch-up materials available from your dealer/retailer. Larger areas of finish damage can be corrected in your dealer's/retailer's body and paint shop.

Underbody Maintenance

Chemicals used for ice and snow removal and dust control can collect on the underbody. If these are not removed, corrosion and rust can develop on the underbody parts such as fuel lines, frame, floor pan, and exhaust system even though they have corrosion protection.

At least every spring, flush these materials from the underbody with plain water. Clean any areas where mud and debris can collect. Dirt packed in close areas of the frame should be loosened before being flushed. Your dealer/retailer or an underbody car washing system can do this.

Chemical Paint Spotting

Some weather and atmospheric conditions can create a chemical fallout. Airborne pollutants can fall upon and attack painted surfaces on the vehicle. This damage can take two forms: blotchy, ring-shaped discolorations, and small, irregular dark spots etched into the paint surface.

Although no defect in the paint job causes this, we will repair, at no charge to the owner, the surfaces of new vehicles damaged by this fallout condition within 12 months or 12,000 miles (20 000 km) of purchase, whichever occurs first.

Downloaded from www.Manualslib.com manuals search engine

Vehicle Identification

Vehicle Identification Number (VIN)

This legal identifier is in the front corner of the instrument panel, on the driver side. It can be seen through the windshield from outside. The VIN also appears on the Vehicle Certification and Service Parts labels and certificates of title and registration.

Engine Identification

The eighth character in the VIN is the engine code. This code identifies the vehicle's engine, specifications, and replacement parts. See "Engine Specifications" under *Capacities and Specifications on page 6-104* for the vehicle's engine code.

Service Parts Identification Label

This label, on the inside of the glove box, has the following information:

- Vehicle Identification Number (VIN)
- Model designation
- Paint information
- Production options and special equipment

Do not remove this label from the vehicle.

Electrical System

Add-On Electrical Equipment

Notice: **Do not add anything electrical to the vehicle unless you check with your dealer/retailer first. Some electrical equipment can damage the vehicle and the damage would not be covered by the vehicle's warranty. Some add-on electrical equipment can keep other components from working as they should.**

Add-on equipment can drain the vehicle battery, even if the vehicle is not operating.

Downloaded from www.Manualslib.com manuals search engine

The vehicle has an airbag system. Before attempting to add anything electrical to the vehicle, see *Servicing Your Airbag-Equipped Vehicle on page 2-48* and *Adding Equipment to Your Airbag-Equipped Vehicle on page 2-48*.

Headlamp Wiring

The headlamp wiring is protected by fuses in the fuse block. An electrical overload will cause the lamps to turn off. If this happens, have the headlamp wiring checked right away.

Power Windows and Other Power Options

Circuit breakers in the fuse block protect the power windows and other power accessories. When the current load is too heavy, the circuit breaker opens and closes, protecting the circuit until the problem is fixed or goes away.

Fuses and Circuit Breakers

The wiring circuits in the vehicle are protected from short circuits by a combination of J-Case fuses, mini-fuses and circuit breakers. This greatly reduces the chance of fires caused by electrical problems.

Look at the silver-colored band inside the fuse. If the band is broken or melted, replace the fuse. Be sure you replace a bad fuse with a new one of the identical size and rating.

If you ever have a problem on the road and do not have a spare fuse, you can borrow one that has the same amperage. Just pick some feature of the vehicle that you can get along without – like the radio or cigarette lighter – and use its fuse, if it is the correct amperage. Replace it as soon as you can.

Floor Console Fuse Block

The floor console fuse block is located on the passenger side of the vehicle under the carpet.

Remove the fuse block cover to access the fuses. Use the fuse puller to remove fuses.

After re-installing the fuse block cover, be sure to tuck the carpet under the heater floor outlets.

Downloaded from www.Manualslib.com manuals search engine

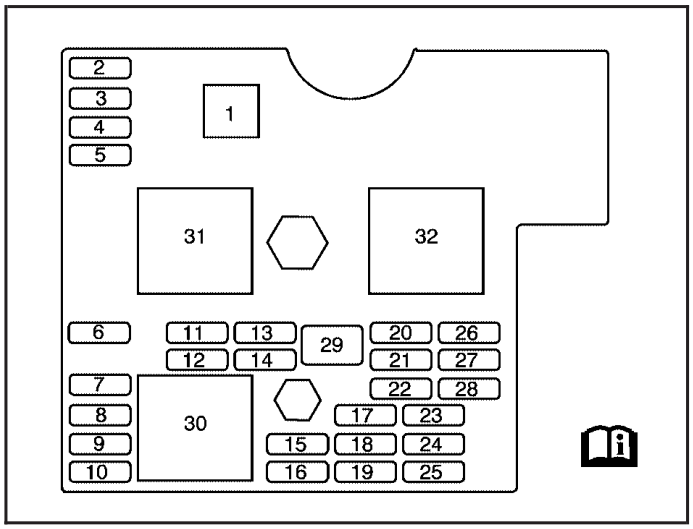

Fuses	Usage
1	Fuse Puller
2	Empty
3	Empty
4	Empty
5	Empty
6	Amplifier
7	Cluster

Fuses	Usage
8	Ignition Switch, PassKey III+
9	Stoplamp
10	Climate Control System, PassKey III+
11	Empty
12	Spare
13	Airbag
14	Spare
15	Wiper
16	Climate Control System, Automatic Occupant Sensing Module, Instrument Panel Cluster Ignition
17	Empty
18	Empty
19	Steering Wheel Controls
20	Spare
21	Spare
22	Empty
23	Radio, Remote Keyless Entry
24	Sensing and Diagnostic Module
25	Engine Control Module, Transmission Control Module
26	Door Locks
27	Interior Lamps

Downloaded from www.Manualslib.com manuals search engine

Fuses	Usage
28	Steering Wheel Control Backlighting
29	Power Windows
30	Climate Control System
31	Empty
32	Retained Accessory Power

Underhood Fuse Block

The underhood fuse block is located in the engine compartment on the passenger side of the vehicle.

Lift the cover for access to the fuse block.

Notice: **Spilling liquid on any electrical components on the vehicle may damage it. Always keep the covers on any electrical component.**

To remove fuses, use the fuse puller, or hold the end of the fuse between your thumb and index finger and pull straight out.

See *Engine Compartment Overview on page 6-12* for more information on location.

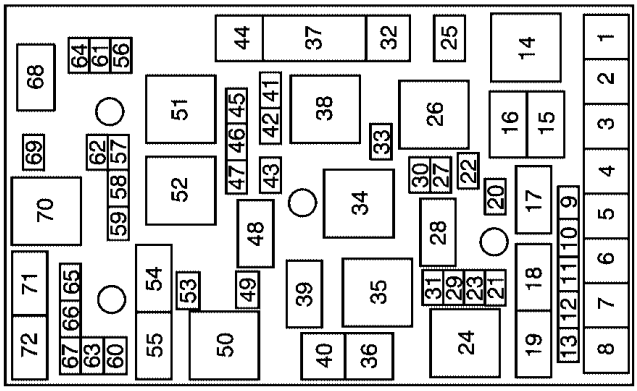

Fuses	Usage
1	Empty (LE5); Cooling Fan (LNF)
2	Rear Window Defogger
3	Empty
4	Body Control Module 3
5	Crank
6	Body Control Module 2
7	Body Control Module
8	Cooling Fan 2 (LE5); Empty (LNF)
9	Empty
10	Trunk

Downloaded from www.Manualslib.com manuals search engine

Fuses	Usage
11	Trunk
12	Empty
13	Fuel Pump
14	Rear Defogger Relay
15	Air Conditioning Clutch Relay
16	Empty
17	Empty
18	Trunk Release Relay
19	Fuel Pump Relay
20	Empty
21	Mirrors
22	Air Conditioning
23	Empty
24	Cooling Fan 2 Relay (LE5); Empty (LNF)
25	Fuse Puller
26	Powertrain Relay
27	Empty
28	Back-up Lamps Relay (Automatic Transmission); Empty (Manual Transmission)
29	Data Link Connector
30	Outlet

Fuses	Usage
31	Back-up Lamps (Automatic Transmission); Empty (Manual Transmission)
32	Empty (LE5), Vacuum Pump (LNF)
33	Emissions
34	Crank Relay
35	Empty
36	Empty
37	Power Seat
38	Empty (LE5), Vacuum Pump Relay (LNF)
39	Empty
40	Cooling Fan 1 (LE5); Empty (LNF)
41	Empty (LE5); Turbo, Cam Phaser (LNF)
42	Engine Control Module
43	Engine Control Module, Transmission
44	Antilock Brake System
45	Injectors, Ignition Coils (LE5); Ignition Coils (LNF)
46	Back-up Lamps (Manual Transmission); Empty (Automatic Transmission)
47	Empty

Downloaded from www.Manualslib.com manuals search engine

Fuses	Usage
48	Daytime Running Lamps Relay
49	Daytime Running Lamps
50	Cooling Fan 1 Relay (LE5); Empty (LNF)
51	Run/Crank Relay
52	Windshield Wiper Low/High Relay
53	Fog Lamps
54	Fog Lamps Relay
55	Horn Relay
56	S Band, OnStar®
57	Antilock Brake System
58	Wiper Diode
59	Windshield Wiper
60	Horn

Fuses	Usage
61	Antilock Brake System
62	Instrument Panel Ignition
63	Driver Side High Beam
64	Canister Vent
65	Driver Side Low-Beam Headlamp
66	Passenger Side Low-Beam Headlamp
67	Passenger Side High-Beam Headlamp
68	Parking Lamps Relay
69	Parking Lamps
70	Windshield Wiper On/Off Relay
71	Low-Beam Headlamp Relay
72	High-Beam Headlamp Relay

Downloaded from www.Manualslib.com manuals search engine

Capacities and Specifications

The following approximate capacities are given in English and metric conversions. Please refer to *Recommended Fluids and Lubricants on page 7-10* for more information.

Application	Capacities	
	Metric	**English**
Air Conditioning Refrigerant R134a	For the air conditioning system refrigerant charge amount, see the refrigerant caution label located under the hood. See your dealer/retailer for more information.	
Cooling System		
2.0L L4 Engine — Automatic	8.7 L	9.2 qt
2.0L L4 Engine — Manual	9.0 L	9.5 qt
2.4L L4 Engine — Automatic	8.2 L	8.7 qt
2.4L L4 Engine — Manual	8.4 L	8.9 qt
Engine Oil with Filter		
2.0L L4 and 2.4L L4	4.7 L	5.0 qt
Fuel Tank	51.5 L	13.6 gal
Transmission, Automatic (Pan Removal and Filter Replacement)	7.0 L	7.4 qt
Transmission, Manual (Complete Drain and Refill)	2.6 L	2.75 qt
Wheel Nut Torque	140 N•m	100 lb ft
All capacities are approximate. When adding, be sure to fill to the approximate level, as recommended in this manual.		

Downloaded from www.Manualslib.com manuals search engine

Engine Specifications

Engine	VIN Code	Transmission	Spark Plug Gap
2.0L L4	X	Automatic Manual	0.90 mm (0.035 in)
2.4L L4	B	Automatic Manual	1.01 mm (0.040 in)

Downloaded from www.Manualslib.com manuals search engine

✍ NOTES

Downloaded from www.Manualslib.com manuals search engine

Section 7 Maintenance Schedule

Maintenance Schedule 7-2
Introduction 7-2
Scheduled Maintenance 7-3
Owner Checks and Services 7-8
Recommended Fluids and Lubricants 7-10
Maintenance Replacement Parts 7-12
Engine Drive Belt Routing 7-13
Maintenance Record 7-14

Downloaded from www.Manualslib.com manuals search engine

Maintenance Schedule

Introduction

Notice: **Maintenance intervals, checks, inspections, recommended fluids, and lubricants are necessary to keep this vehicle in good working condition. Damage caused by failure to follow scheduled maintenance might not be covered by the vehicle warranty.**

Proper vehicle maintenance helps to keep the vehicle in good working condition, improves fuel economy, and reduces vehicle emissions for better air quality.

Because of all the different ways people use vehicles, maintenance needs vary. The vehicle might need more frequent checks and services. Please read the information under Scheduled Maintenance. To keep the vehicle in good condition, see your dealer/retailer.

The maintenance schedule is for vehicles that:

- carry passengers and cargo within recommended limits on the Tire and Loading Information label. See *Loading the Vehicle on page 5-22*.
- are driven on reasonable road surfaces within legal driving limits.
- use the recommended fuel. See *Gasoline Octane on page 6-6*.

⚠ WARNING:

Performing maintenance work on a vehicle can be dangerous. In trying to do some jobs, you can be seriously injured. Do your own maintenance work only if you have the required know-how and the proper tools and equipment for the job. If you have any doubt, see your dealer/retailer to have a qualified technician do the work. See *Doing Your Own Service Work on page 6-4*.

Downloaded from www.Manualslib.com manuals search engine

At your General Motors dealer/retailer, you can be certain that you will receive the highest level of service available. Your dealer /retailer has specially trained service technicians, uses genuine GM replacement parts, as well as, up to date tools and equipment to ensure fast and accurate diagnostics.

The proper replacement parts, fluids, and lubricants to use are listed in *Recommended Fluids and Lubricants on page 7-10* and *Maintenance Replacement Parts on page 7-12*. We recommend the use of genuine parts from your dealer/retailer.

Rotation of New Tires

To maintain ride, handling, and performance of the vehicle, it is important that the first rotation service for new tires be performed when they have 8 000 to 13 000 km (5,000 to 8,000 miles). See *Tire Inspection and Rotation on page 6-61*.

Scheduled Maintenance

When the Change Oil Soon Message Displays

Change engine oil and filter. See *Engine Oil on page 6-15*. *An Emission Control Service.*

When the Change Oil Soon message displays, service is required for the vehicle as soon as possible, within the next 1 000 km/600 miles. If driving under the best conditions, the engine oil life system might not indicate the need for vehicle service for more than a year. The engine oil and filter must be changed at least once a year and the oil life system must be reset. Your dealer/retailer has trained service technicians who will perform this work and reset the system. If the engine oil life system is reset accidentally, service the vehicle within 5 000 km/3,000 miles since the last service. Reset the oil life system whenever the oil is changed. See *Engine Oil Life System on page 6-19*.

Downloaded from www.Manualslib.com manuals search engine

When the Change Oil Soon message displays, certain services, checks, and inspections are required. The services described for Maintenance I should be performed at every engine oil change. The services described for Maintenance II should be performed when:

- Maintenance I was performed the last time the engine oil was changed.
- It has been 10 months or more since the Change Engine Oil Soon message has displayed or since the last service.

Maintenance I

- Change engine oil and filter. See *Engine Oil on page 6-15*. *An Emission Control Service.*
- Engine coolant level check. See *Engine Coolant on page 6-25*.
- Windshield washer fluid level check. See *Windshield Washer Fluid on page 6-31*.
- Tire inflation check. See *Inflation - Tire Pressure on page 6-54*.
- Tire wear inspection. See *Tire Inspection and Rotation on page 6-61*.
- Rotate tires. See *Tire Inspection and Rotation on page 6-61*.
- Fluids visual leak check (or every 12 months, whichever occurs first). A leak in any system must be repaired and the fluid level checked.
- Engine air cleaner filter inspection (vehicles driven in dusty conditions only). See *Engine Air Cleaner/Filter on page 6-21*.
- Brake system inspection (or every 12 months, whichever occurs first).

Maintenance II

- Perform all services described in Maintenance I.
- Steering and suspension inspection. Visual inspection for damaged, loose, or missing parts or signs of wear.
- Engine cooling system inspection. Visual inspection of hoses, pipes, fittings, and clamps and replacement, if needed.
- Windshield wiper blade inspection for wear, cracking, or contamination and windshield and wiper blade cleaning, if contaminated. See *Windshield and Wiper Blades on page 6-95*. Worn or damaged wiper blade replacement. See *Windshield Wiper Blade Replacement on page 6-46*.

Downloaded from www.Manualslib.com manuals search engine

- Body hinges and latches, key lock cylinders, folding seat hardware, and rear compartment hinges lubrication. See *Recommended Fluids and Lubricants on page 7-10*. More frequent lubrication may be required when vehicle is exposed to a corrosive environment. Applying silicone grease on weatherstrips with a clean cloth makes them last longer, seal better, and not stick or squeak.
- Restraint system component check. See *Checking the Restraint Systems on page 2-50*.
- Engine air cleaner filter inspection. See *Engine Air Cleaner/Filter on page 6-21*.

Additional Required Services

At Each Fuel Stop

- Engine oil level check. See *Engine Oil on page 6-15*.
- Engine coolant level check. See *Engine Coolant on page 6-25*.
- Windshield washer fluid level check. See *Windshield Washer Fluid on page 6-31*.

Once a Month

- Tire inflation check. See *Inflation - Tire Pressure on page 6-54*.
- Tire wear inspection. See *Tire Inspection and Rotation on page 6-61*.

Once a Year

- Starter switch check. See *Owner Checks and Services on page 7-8*.
- Parking brake and automatic transmission P (Park) mechanism check. See *Owner Checks and Services on page 7-8*.
- Automatic transmission shiftlock control system check. See *Owner Checks and Services on page 7-8*.
- Ignition transmission lock check. See *Owner Checks and Services on page 7-8*.
- Engine cooling system and pressure cap pressure check. Radiator and air conditioning condenser outside cleaning. See *Cooling System on page 6-23*.
- Exhaust system and nearby heat shields inspection for loose or damaged components.
- Accelerator pedal check for damage, high effort, or binding. Replace if needed.
- If the vehicle has a Tire Sealant and Compressor Kit, check the sealant expiration date printed on the instruction label of the kit. See *Tire Sealant and Compressor Kit (Without Selector Switch) on page 6-71* or *Tire Sealant and Compressor Kit (With Selector Switch) on page 6-80*.

Downloaded from www.Manualslib.com manuals search engine

First Engine Oil Change After Every 40 000 km/25,000 Miles

- Fuel system inspection for damage or leaks.

First Engine Oil Change After Every 80 000 km/50,000 Miles

- Engine air cleaner filter replacement. See *Engine Air Cleaner/Filter on page 6-21*.
- Automatic transmission fluid change (severe service) for vehicles mainly driven in heavy city traffic in hot weather, in hilly or mountainous terrain, when frequently towing a trailer, or used for taxi, police, or delivery service. See *Automatic Transmission Fluid on page 6-22*.

First Engine Oil Change After Every 160 000 km/100,000 Miles

- Automatic transmission fluid change (normal service). See *Automatic Transmission Fluid on page 6-22*.
- Spark plug replacement. *An Emission Control Service.*

First Engine Oil Change After Every 240 000 km/150,000 Miles

- Engine cooling system drain, flush, and refill, cooling system and cap pressure check, and cleaning of outside of radiator and air conditioning condenser (or every 5 years, whichever occurs first). See *Engine Coolant on page 6-25*. *An Emission Control Service.*
- Engine accessory drive belt inspection for fraying, excessive cracks, or obvious damage and replacement, if needed. *An Emission Control Service.*

Downloaded from www.Manualslib.com manuals search engine

Scheduled Maintenance

Service	Maintenance I	Maintenance II
Change engine oil and filter. Reset oil life system.	•	•
Engine coolant level check.	•	•
Windshield washer fluid level check.	•	•
Tire inflation pressures check.	•	•
Tire wear inspection.	•	•
Rotate tires.	•	•
Fluids visual leak check.	•	•
Engine air cleaner filter inspection (vehicles driven in dusty conditions only).	•	•
Brake system inspection.	•	•
Steering and suspension inspection.		•
Engine cooling system inspection.		•
Windshield wiper blades inspection.		•
Body components lubrication.		•
Restraint system components check.		•
Engine air cleaner filter inspection (vehicles not driven in dusty conditions).		•

Downloaded from www.Manualslib.com manuals search engine

Owner Checks and Services

Starter Switch Check

⚠ WARNING:

When you are doing this inspection, the vehicle could move suddenly. If the vehicle moves, you or others could be injured.

1. Before starting this check, be sure there is enough room around the vehicle.
2. Firmly apply both the parking brake and the regular brake. See *Parking Brake on page 3-25*.

   Do not use the accelerator pedal, and be ready to turn off the engine immediately if it starts.
3. For automatic transmission vehicles, try to start the engine in each gear. The starter should work only in P (Park) or N (Neutral). If the starter works in any other position, your vehicle needs service.

   For manual transmission vehicles, put the shift lever in Neutral, push the clutch pedal down halfway, and try to start the engine. The starter should work only when the clutch pedal is pushed down all the way to the floor. If the starter works when the clutch pedal is not pushed all the way down, your vehicle needs service.

Automatic Transmission Shift Lock Control System Check

⚠ WARNING:

When you are doing this inspection, the vehicle could move suddenly. If the vehicle moves, you or others could be injured.

1. Before starting this check, be sure there is enough room around the vehicle. It should be parked on a level surface.
2. Firmly apply the parking brake. See *Parking Brake on page 3-25*.

   Be ready to apply the regular brake immediately if the vehicle begins to move.
3. With the engine off, turn the ignition to ON/RUN, but do not start the engine. Without applying the regular brake, try to move the shift lever out of P (Park) with normal effort. If the shift lever moves out of P (Park), contact your dealer/retailer for service.

Downloaded from www.Manualslib.com manuals search engine

Ignition Transmission Lock Check

While parked, and with the parking brake set, try to turn the ignition to LOCK/OFF in each shift lever position.

- For automatic transmission vehicles, the ignition should turn to LOCK/OFF only when the shift lever is in P (Park). The ignition key should come out only in LOCK/OFF.
- For manual transmission vehicles, the ignition should turn to LOCK/OFF only when you press the key release button.

On all vehicles, the ignition key should come out only in LOCK/OFF.

Turn the steering wheel to the left and to the right. It should only lock when turned to the right.

Contact your dealer/retailer if service is required.

Parking Brake and Automatic Transmission P (Park) Mechanism Check

⚠ WARNING:

When you are doing this check, the vehicle could begin to move. You or others could be injured and property could be damaged. Make sure there is room in front of the vehicle in case it begins to roll. Be ready to apply the regular brake at once should the vehicle begin to move.

Park on a fairly steep hill, with the vehicle facing downhill. Keeping your foot on the regular brake, set the parking brake.

- To check the parking brake's holding ability: With the engine running and the transmission in N (Neutral), slowly remove foot pressure from the regular brake pedal. Do this until the vehicle is held by the parking brake only.
- To check the P (Park) mechanism's holding ability: With the engine running, shift to P (Park). Then release the parking brake followed by the regular brake.

Contact your dealer/retailer if service is required.

Downloaded from www.Manualslib.com manuals search engine

Recommended Fluids and Lubricants

Fluids and lubricants identified below by name, part number, or specification can be obtained from your dealer/retailer.

Usage	Fluid/Lubricant
Engine Oil (2.4L L4 engine)	Engine oil which meets GM Standard GM6094M and displays the American Petroleum Institute Certified for Gasoline Engines starburst symbol. To determine the proper viscosity for your vehicle's engine, see *Engine Oil on page 6-15*.
Engine Oil (2.0L L4 engine)	The engine requires a special engine oil meeting GM Standard GM4718M. Oils meeting this standard can be identified with the American Petroleum Institute (API) Certified for Gasoline Engines starburst symbol. However, not all synthetic API oils with the starburst symbol will meet this GM standard. Look for and use only an oil that meets GM Standard GM4718M. For the proper viscosity, see *Engine Oil on page 6-15*.

Usage	Fluid/Lubricant
Engine Coolant	50/50 mixture of clean, drinkable water and use only DEX-COOL® Coolant. See *Engine Coolant on page 6-25*.
Hydraulic Brake System	DOT 3 Hydraulic Brake Fluid (GM Part No. U.S. 12377967, in Canada 89021320).
Hydraulic Clutch System	DOT 3 Hydraulic Brake Fluid (GM Part No. U.S. 12377967, in Canada 89021320).
Power Steering System	GM Power Steering Fluid (GM Part No. U.S. 89021184, in Canada 89021186).
Windshield Washer	Optikleen® Washer Solvent.
Manual Transmission	Manual Transmission Fluid (GM Part No. U.S. 89021806, in Canada 89021807).
Automatic Transmission	DEXRON®-VI Automatic Transmission Fluid.
Key Lock Cylinders	Multi-Purpose Lubricant, Superlube (GM Part No. U.S. 12346241, in Canada 10953474).

Downloaded from www.Manualslib.com manuals search engine

Usage	Fluid/Lubricant
Rear Axle	SAE 75W-90 Synthetic Axle Lubricant (GM Part No. U.S. 89021677, in Canada 89021678) meeting GM Specification 9986115.
Rear Axle (Limited-Slip Differential)	SAE 75W-90 Synthetic Axle Lubricant (GM Part No. U.S. 89021677, in Canada 89021678) meeting GM Specification 9986115. With a complete drain and refill add 4 ounces (118 ml) of Limited-Slip Axle Lubricant Additive (GM Part No. U.S. 1052358, in Canada 992694) where required. See *Rear Axle on page 6-40*.
Chassis Lubrication	Chassis Lubricant (GM Part No. U.S. 12377985, in Canada 88901242) or lubricant meeting requirements of NLGI #2, Category LB or GC-LB.

Usage	Fluid/Lubricant
Hood Latch Assembly, Secondary Latch, Pivots, Spring Anchor, and Release Pawl	Lubriplate Lubricant Aerosol (GM Part No. U.S. 12346293, in Canada 992723) or lubricant meeting requirements of NLGI #2, Category LB or GC-LB.
Hood and Door Hinges	Multi-Purpose Lubricant, Superlube (GM Part No. U.S. 12346241, in Canada 10953474).
Weatherstrip Conditioning	Weatherstrip Lubricant (GM Part No. U.S. 3634770, in Canada 10953518) or Dielectric Silicone Grease (GM Part No. U.S. 12345579, in Canada 992887).

Downloaded from www.Manualslib.com manuals search engine

Maintenance Replacement Parts

Replacement parts identified below by name, part number, or specification can be obtained from your dealer/retailer.

Maintenance Replacement Parts

Part	Part Number	ACDelco Part Number
Engine Air Cleaner/Filter		
2.0L L4 Engine	15925738	A3084C
2.4L L4 Engine	15287103	A3076C
Engine Oil Filter	12605566	PF457G
Spark Plugs		
2.0L L4 Engine	12620540	41-108
2.4L L4 Engine	12625058	41-103
Wiper Blades		
Driver Side —16 in (40 cm)	10344209	—
Passenger Side — 22 in (55 cm)	10344210	—

Downloaded from www.Manualslib.com manuals search engine

Engine Drive Belt Routing

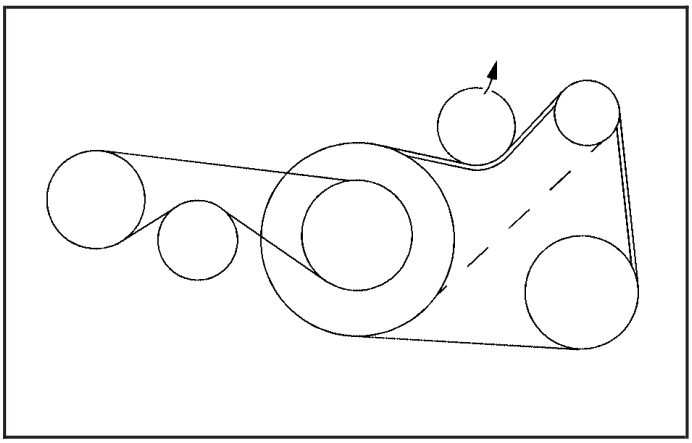

Belt routing for air conditioning (AC) shown. Dotted line represents routing for vehicles without AC.

Downloaded from www.Manualslib.com manuals search engine

Maintenance Record

After the scheduled services are performed, record the date, odometer reading, who performed the service, and the type of services performed in the boxes provided. Retain all maintenance receipts.

Maintenance Record

Date	Odometer Reading	Serviced By	Services Performed

Downloaded from www.Manualslib.com manuals search engine

Maintenance Record (cont'd)

Date	Odometer Reading	Serviced By	Services Performed

Downloaded from www.Manualslib.com manuals search engine

Maintenance Record (cont'd)

Date	Odometer Reading	Serviced By	Services Performed

Downloaded from www.Manualslib.com manuals search engine

Section 8 Customer Assistance Information

Customer Assistance and Information 8-2
Customer Satisfaction Procedure 8-2
Online Owner Center 8-5
Customer Assistance for
Text Telephone (TTY) Users 8-6
Customer Assistance Offices 8-6
GM Mobility Reimbursement Program 8-7
Roadside Assistance Program 8-7
Scheduling Service Appointments 8-11
Courtesy Transportation Program 8-11
Collision Damage Repair 8-13

Reporting Safety Defects 8-16
Reporting Safety Defects to the
United States Government 8-16
Reporting Safety Defects to the
Canadian Government 8-16
Reporting Safety Defects to General Motors 8-16
Service Publications Ordering Information 8-17

Vehicle Data Recording and Privacy 8-18
Event Data Recorders 8-19
OnStar® 8-20
Navigation System 8-20
Radio Frequency Identification (RFID) 8-20
Radio Frequency Statement 8-20

Downloaded from www.Manualslib.com manuals search engine

Customer Assistance and Information

Customer Satisfaction Procedure

Your satisfaction and goodwill are important to your dealer and to Pontiac. Normally, any concerns with the sales transaction or the operation of the vehicle will be resolved by the dealer's sales or service departments. Sometimes, however, despite the best intentions of all concerned, misunderstandings can occur. If your concern has not been resolved to your satisfaction, the following steps should be taken:

STEP ONE: Discuss your concern with a member of dealership management. Normally, concerns can be quickly resolved at that level. If the matter has already been reviewed with the sales, service, or parts manager, contact the owner of the dealership or the general manager.

STEP TWO: If after contacting a member of dealership management, it appears your concern cannot be resolved by the dealership without further help, in the U.S., call the Pontiac Customer Assistance Center at 1-800-762-2737. In Canada, call General Motors of Canada Customer Communication Centre at 1-800-263-3777 (English) or 1-800-263-7854 (French).

We encourage you to call the toll-free number in order to give your inquiry prompt attention. Have the following information available to give the Customer Assistance Representative:

- Vehicle Identification Number (VIN). This is available from the vehicle registration or title, or the plate at the top left of the instrument panel and visible through the windshield.
- Dealership name and location.
- Vehicle delivery date and present mileage.

When contacting Pontiac, remember that your concern will likely be resolved at a dealer's facility. That is why we suggest you follow Step One first.

Downloaded from www.Manualslib.com manuals search engine

STEP THREE — U.S. Owners: Both General Motors and your dealer are committed to making sure you are completely satisfied with your new vehicle. However, if you continue to remain unsatisfied after following the procedure outlined in Steps One and Two, you can file with the BBB Auto Line Program to enforce your rights.

The BBB Auto Line Program is an out of court program administered by the Council of Better Business Bureaus to settle automotive disputes regarding vehicle repairs or the interpretation of the New Vehicle Limited Warranty. Although you may be required to resort to this informal dispute resolution program prior to filing a court action, use of the program is free of charge and your case will generally be heard within 40 days. If you do not agree with the decision given in your case, you may reject it and proceed with any other venue for relief available to you.

You can contact the BBB Auto Line Program using the toll-free telephone number or write them at the following address:

BBB Auto Line Program
Council of Better Business Bureaus, Inc.
4200 Wilson Boulevard
Suite 800
Arlington, VA 22203-1838

Telephone: 1-800-955-5100
www.dr.bbb.org/goauto

This program is available in all 50 states and the District of Columbia. Eligibility is limited by vehicle age, mileage and other factors. General Motors reserves the right to change eligibility limitations and/or discontinue its participation in this program.

Downloaded from www.Manualslib.com manuals search engine

STEP THREE — Canadian Owners: In the event that you do not feel your concerns have been addressed after following the procedure outlined in Steps One and Two, General Motors of Canada Limited wants you to be aware of its participation in a no-charge Mediation/Arbitration Program. General Motors of Canada Limited has committed to binding arbitration of owner disputes involving factory-related vehicle service claims. The program provides for the review of the facts involved by an impartial third party arbiter, and may include an informal hearing before the arbiter. The program is designed so that the entire dispute settlement process, from the time you file your complaint to the final decision, should be completed in approximately 70 days. We believe our impartial program offers advantages over courts in most jurisdictions because it is informal, quick, and free of charge.

For further information concerning eligibility in the Canadian Motor Vehicle Arbitration Plan (CAMVAP), call toll-free 1-800-207-0685, or call the General Motors Customer Communication Centre, 1-800-263-3777 (English), 1-800-263-7854 (French), or write to:

Mediation/Arbitration Program
c/o Customer Communication Centre
General Motors of Canada Limited
Mail Code: CA1-163-005
1908 Colonel Sam Drive
Oshawa, Ontario L1H 8P7

Your inquiry should be accompanied by the Vehicle Identification Number (VIN).

Downloaded from www.Manualslib.com manuals search engine

Online Owner Center

Online Owner Center (U.S.) — www.gmownercenter.com/pontiac

Information and services customized for your specific vehicle — all in one convenient place.

- Digital owner manual, warranty information, and more
- Online service and maintenance records
- Find Pontiac dealers for service nationwide
- Exclusive privileges and offers
- Recall notices for your specific vehicle
- OnStar® and GM Cardmember Services Earnings summaries

Other Helpful Links:

Pontiac — www.pontiac.com

Pontiac Merchandise — www.pontiacmall.com

Help Center — www.pontiac.com/helpcenter

- FAQ
- Contact Us

My GM Canada (Canada) — www.gm.ca

My GM Canada is a password-protected section of www.gm.ca where you can save information on GM vehicles, get personalized offers, and use handy tools and forms with greater ease.

Here are a few of the valuable tools and services you will have access to:

- My Showroom: Find and save information on vehicles and current offers in your area.
- My Dealers/Retailers: Save details such as address and phone number for each of your preferred GM dealers/retailers.
- My Driveway: Access quick links to parts and service estimates, check trade-in values, or schedule a service appointment by adding the vehicles you own to your driveway profile.
- My Preferences: Manage your profile and use tools and forms with greater ease.

To sign up, visit the My GM Canada section within www.gm.ca.

Downloaded from www.Manualslib.com manuals search engine

Customer Assistance for Text Telephone (TTY) Users

To assist customers who are deaf, hard of hearing, or speech-impaired and who use Text Telephones (TTYs), Pontiac has TTY equipment available at its Customer Assistance Center. Any TTY user in the U.S. can communicate with Pontiac by dialing: 1-800-833-PONT (7668). (TTY users in Canada can dial 1-800-263-3830.)

Customer Assistance Offices

Pontiac encourages customers to call the toll-free number for assistance. However, if a customer wishes to write or e-mail Pontiac, the letter should be addressed to:

United States — Customer Assistance

Pontiac Customer Assistance Center
P.O. Box 33172
Detroit, MI 48232-5172

www.Pontiac.com
1-800-762-2737 or
1-800-833-7668 (For Text Telephone devices (TTYs))
Roadside Assistance: 1-800-ROADSIDE (762-3743)

From Puerto Rico:
1-800-496-9992 (English)
1-800-496-9993 (Spanish)

From U.S. Virgin Islands:
1-800-496-9994

Canada — Customer Assistance

General Motors of Canada Limited
Customer Communication Centre, CA1-163-005
1908 Colonel Sam Drive
Oshawa, Ontario L1H 8P7

www.gmcanada.com
1-800-263-3777 (English)
1-800-263-7854 (French)
1-800-263-3830 (For Text Telephone devices (TTYs))
Roadside Assistance: 1-800-268-6800

Overseas — Customer Assistance

Please contact the local General Motors Business Unit.

Downloaded from www.Manualslib.com manuals search engine

Mexico, Central America and Caribbean Islands/Countries (Except Puerto Rico and U.S. Virgin Islands) — Customer Assistance

General Motors de Mexico, S. de R.L. de C.V.
Customer Assistance Center
Paseo de la Reforma #2740
Col. Lomas de Bezares
C.P. 11910, Mexico, D.F.
01-800-508-0000
Long Distance: 011-52-53 29 0 800

GM Mobility Reimbursement Program

GM MOBILITY℠

This program, available to qualified applicants, can reimburse you up to $1,000 of the cost of eligible aftermarket adaptive equipment required for your vehicle, such as hand controls or a wheelchair/scooter lift.

The offer is available for a very limited period of time from the date of vehicle purchase/lease. For more details, or to determine your vehicle's eligibility, visit gmmobility.com or call the GM Mobility Assistance Center at 1-800-323-9935. Text telephone (TTY) users, call 1-800-833-9935.

General Motors of Canada also has a Mobility Program. Call 1-800-GM-DRIVE (463-7483) for details. TTY users call 1-800-263-3830.

Roadside Assistance Program

For U.S. purchased vehicles, call **1-800-ROADSIDE (762-3743); (Text telephone (TTY): 1-888-889-2438)**.

For Canadian purchased vehicles, call **1-800-268-6800**.

Service is available 24 hours a day, 365 days a year.

Downloaded from www.Manualslib.com manuals search engine

Calling for Assistance

When calling Roadside Assistance, have the following information ready:

- Your name, home address, and home telephone number
- Telephone number of your location
- Location of the vehicle
- Model, year, color, and license plate number of the vehicle
- Odometer reading, Vehicle Identification Number (VIN), and delivery date of the vehicle
- Description of the problem

Coverage

Services are provided up to 5 years/
100,000 miles (160 000 km), whichever comes first.

In the U.S., anyone driving the vehicle is covered. In Canada, a person driving the vehicle without permission from the owner is not covered.

Roadside Assistance is not a part of the New Vehicle Limited Warranty. Pontiac and General Motors of Canada Limited reserve the right to make any changes or discontinue the Roadside Assistance program at any time without notification.

Pontiac and General Motors of Canada Limited reserve the right to limit services or payment to an owner or driver if they decide the claims are made too often, or the same type of claim is made many times.

Downloaded from www.Manualslib.com manuals search engine

Services Provided

- **Emergency Fuel Delivery:** Delivery of enough fuel for the vehicle to get to the nearest service station.
- **Lock-Out Service:** Service is provided to unlock the vehicle if you are locked out. A remote unlock may be available if you have OnStar®. For security reasons, the driver must present identification before this service is given.
- **Emergency Tow From a Public Road or Highway:** Tow to the nearest Pontiac dealer for warranty service, or if the vehicle was in a crash and cannot be driven. Assistance is also given when the vehicle is stuck in sand, mud, or snow.
- **Flat Tire Change:** Service is provided to change a flat tire with the spare tire. The spare tire, if equipped, must be in good condition and properly inflated. It is the owner's responsibility for the repair or replacement of the tire if it is not covered by the warranty.
- **Battery Jump Start:** Service is provided to jump start a dead battery.
- **Trip Interruption Benefits and Assistance:** If your trip is interrupted due to a warranty failure, incidental expenses may be reimbursed during the 5 years/ 100,000 miles (160 000 km) Powertrain warranty period. Items considered are hotel, meals, and rental car.

Services Not Included in Roadside Assistance

- Impound towing caused by violation of any laws.
- Legal fines.
- Mounting, dismounting or changing of snow tires, chains, or other traction devices.
- Towing or services for vehicles driven on a non-public road or highway.

Downloaded from www.Manualslib.com manuals search engine

Services Specific to Canadian Purchased Vehicles

- **Fuel delivery:** Reimbursement is approximately $5 Canadian. Diesel fuel delivery may be restricted. Propane and other fuels are not provided through this service.
- **Lock-Out Service:** Vehicle registration is required.
- **Trip Routing Service:** Detailed maps of North America are provided when requested either with the most direct route or the most scenic route. There is a limit of six requests per year. Additional travel information is also available. Allow three weeks for delivery.
- **Trip Interruption Benefits and Assistance:** Must be over 250 kilometres from where your trip was started to qualify. General Motors of Canada Limited requires pre-authorization, original detailed receipts, and a copy of the repair orders. Once authorization has been received, the Roadside Assistance advisor will help you make arrangements and explain how to receive payment.
- **Alternative Service:** If assistance cannot be provided right away, the Roadside Assistance advisor may give you permission to get local emergency road service. You will receive payment, up to $100, after sending the original receipt to Roadside Assistance. Mechanical failures may be covered, however any cost for parts and labor for repairs not covered by the warranty are the owner responsibility.

Downloaded from www.Manualslib.com manuals search engine

Scheduling Service Appointments

When your vehicle requires warranty service, contact your dealer/retailer and request an appointment. By scheduling a service appointment and advising your service consultant of your transportation needs, your dealer/retailer can help minimize your inconvenience.

If your vehicle cannot be scheduled into the service department immediately, keep driving it until it can be scheduled for service, unless, of course, the problem is safety-related. If it is, please call your dealership/retailer, let them know this, and ask for instructions.

If the dealer/retailer requests you to bring the vehicle for service, you are urged to do so as early in the work day as possible to allow for the same day repair.

Courtesy Transportation Program

To enhance your ownership experience, we and our participating dealers are proud to offer Courtesy Transportation, a customer support program for vehicles with the New Vehicle Limited Warranty (Base Warranty Coverage period in Canada) and extended powertrain, and hybrid specific warranty in both the U.S. and Canada.

Several courtesy transportation options are available to assist in reducing your inconvenience when warranty repairs are required.

Courtesy Transportation is not a part of the New Vehicle Limited Warranty. A separate booklet entitled “Warranty and Owner Assistance Information” furnished with each new vehicle provides detailed warranty coverage information.

Downloaded from www.Manualslib.com manuals search engine

Transportation Options

Warranty service can generally be completed while you wait. However, if you are unable to wait, GM helps to minimize your inconvenience by providing several transportation options. Depending on the circumstances, your dealer can offer you one of the following:

Shuttle Service

Shuttle service is the preferred means of offering Courtesy Transportation. Dealers may provide you with shuttle service to get you to your destination with minimal interruption of your daily schedule. This includes one-way or round trip shuttle service within reasonable time and distance parameters of the dealer's area.

Public Transportation or Fuel Reimbursement

If your vehicle requires overnight warranty repairs, and public transportation is used instead of the dealer's shuttle service, the expense must be supported by original receipts and can only be up to the maximum amount allowed by GM for shuttle service. In addition, for U.S. customers, should you arrange transportation through a friend or relative, limited reimbursement for reasonable fuel expenses may be available. Claim amounts should reflect actual costs and be supported by original receipts. See your dealer for information regarding the allowance amounts for reimbursement of fuel or other transportation costs.

Courtesy Rental Vehicle

Your dealer may arrange to provide you with a courtesy rental vehicle or reimburse you for a rental vehicle that you obtain if your vehicle is kept for an overnight warranty repair. Rental reimbursement will be limited and must be supported by original receipts. This requires that you sign and complete a rental agreement and meet state/provincial, local, and rental vehicle provider requirements. Requirements vary and may include minimum age requirements, insurance coverage, credit card, etc. You are responsible for fuel usage charges and may also be responsible for taxes, levies, usage fees, excessive mileage, or rental usage beyond the completion of the repair.

It may not be possible to provide a like-vehicle as a courtesy rental.

Downloaded from www.Manualslib.com manuals search engine

Additional Program Information

All program options, such as shuttle service, may not be available at every dealer. Please contact your dealer for specific information about availability. All Courtesy Transportation arrangements will be administered by appropriate dealer personnel.

General Motors reserves the right to unilaterally modify, change or discontinue Courtesy Transportation at any time and to resolve all questions of claim eligibility pursuant to the terms and conditions described herein at its sole discretion.

Collision Damage Repair

If your vehicle is involved in a collision and it is damaged, have the damage repaired by a qualified technician using the proper equipment and quality replacement parts. Poorly performed collision repairs diminish your vehicle's resale value, and safety performance can be compromised in subsequent collisions.

Collision Parts

Genuine GM Collision parts are new parts made with the same materials and construction methods as the parts with which your vehicle was originally built. Genuine GM Collision parts are your best choice to ensure that your vehicle's designed appearance, durability, and safety are preserved. The use of Genuine GM parts can help maintain your GM New Vehicle Warranty.

Recycled original equipment parts may also be used for repair. These parts are typically removed from vehicles that were total losses in prior crashes. In most cases, the parts being recycled are from undamaged sections of the vehicle. A recycled original equipment GM part, may be an acceptable choice to maintain your vehicle's originally designed appearance and safety performance, however, the history of these parts is not known. Such parts are not covered by your GM New Vehicle Limited Warranty, and any related failures are not covered by that warranty.

Aftermarket collision parts are also available. These are made by companies other than GM and may not have been tested for your vehicle. As a result, these parts may fit poorly, exhibit premature durability/corrosion problems, and may not perform properly in subsequent collisions. Aftermarket parts are not covered by your GM New Vehicle Limited Warranty, and any vehicle failure related to such parts are not covered by that warranty.

Downloaded from www.Manualslib.com manuals search engine

Repair Facility

We recommend that you choose a collision repair facility that meets your needs before you ever need collision repairs. Your dealer/retailer may have a collision repair center with GM-trained technicians and state of the art equipment, or be able to recommend a collision repair center that has GM-trained technicians and comparable equipment.

Insuring Your Vehicle

Protect your investment in your GM vehicle with comprehensive and collision insurance coverage. There are significant differences in the quality of coverage afforded by various insurance policy terms. Many insurance policies provide reduced protection to your GM vehicle by limiting compensation for damage repairs by using aftermarket collision parts. Some insurance companies will not specify aftermarket collision parts. When purchasing insurance, we recommend that you assure your vehicle will be repaired with GM original equipment collision parts. If such insurance coverage is not available from your current insurance carrier, consider switching to another insurance carrier.

If your vehicle is leased, the leasing company may require you to have insurance that assures repairs with Genuine GM Original Equipment Manufacturer (OEM) parts or Genuine Manufacturer replacement parts. Read your lease carefully, as you may be charged at the end of your lease for poor quality repairs.

If a Crash Occurs

Here is what to do if you are involved in a crash.

- Check to make sure that you are all right. If you are uninjured, make sure that no one else in your vehicle, or the other vehicle, is injured.
- If there has been an injury, call emergency services for help. Do not leave the scene of a crash until all matters have been taken care of. Move your vehicle only if its position puts you in danger or you are instructed to move it by a police officer.
- Give only the necessary and requested information to police and other parties involved in the crash. Do not discuss your personal condition, mental frame of mind, or anything unrelated to the crash. This will help guard against post-crash legal action.
- If you need roadside assistance, call GM Roadside Assistance. See *Roadside Assistance Program on page 8-7* for more information.
- If your vehicle cannot be driven, know where the towing service will be taking it. Get a card from the tow truck operator or write down the driver's name, the service's name, and the phone number.
- Remove any valuables from your vehicle before it is towed away. Make sure this includes your insurance information and registration if you keep these items in your vehicle.

Downloaded from www.Manualslib.com manuals search engine

- Gather the important information you will need from the other driver. Things like name, address, phone number, driver's license number, vehicle license plate, vehicle make, model and model year, Vehicle Identification Number (VIN), insurance company and policy number, and a general description of the damage to the other vehicle.
- If possible, call your insurance company from the scene of the crash. They will walk you through the information they will need. If they ask for a police report, phone or go to the police department headquarters the next day and you can get a copy of the report for a nominal fee. In some states/provinces with "no fault" insurance laws, a report may not be necessary. This is especially true if there are no injuries and both vehicles are driveable.
- Choose a reputable collision repair facility for your vehicle. Whether you select a dealer/retailer or a private collision repair facility to fix the damage, make sure you are comfortable with them. Remember, you will have to feel comfortable with their work for a long time.
- Once you have an estimate, read it carefully and make sure you understand what work will be performed on your vehicle. If you have a question, ask for an explanation. Reputable shops welcome this opportunity.

Managing the Vehicle Damage Repair Process

In the event that your vehicle requires damage repairs, GM recommends that you take an active role in its repair. If you have a pre-determined repair facility of choice, take your vehicle there, or have it towed there. Specify to the facility that any required replacement collision parts be original equipment parts, either new Genuine GM parts or recycled original GM parts. Remember, recycled parts will not be covered by your GM vehicle warranty.

Insurance pays the bill for the repair, but you must live with the repair. Depending on your policy limits, your insurance company may initially value the repair using aftermarket parts. Discuss this with your repair professional, and insist on Genuine GM parts. Remember if your vehicle is leased you may be obligated to have the vehicle repaired with Genuine GM parts, even if your insurance coverage does not pay the full cost.

If another party's insurance company is paying for the repairs, you are not obligated to accept a repair valuation based on that insurance company's collision policy repair limits, as you have no contractual limits with that company. In such cases, you can have control of the repair and parts choices as long as cost stays within reasonable limits.

Downloaded from www.Manualslib.com manuals search engine

Reporting Safety Defects

Reporting Safety Defects to the United States Government

If you believe that your vehicle has a defect which could cause a crash or could cause injury or death, you should immediately inform the National Highway Traffic Safety Administration (NHTSA) in addition to notifying General Motors.

If NHTSA receives similar complaints, it may open an investigation, and if it finds that a safety defect exists in a group of vehicles, it may order a recall and remedy campaign. However, NHTSA cannot become involved in individual problems between you, your dealer/retailer, or General Motors.

To contact NHTSA, you may call the Vehicle Safety Hotline toll-free at 1-888-327-4236 (TTY: 1-800-424-9153); go to safercar.gov; or write to:

Administrator, NHTSA
1200 New Jersey Avenue, S.E.
Washington D.C., 20590

You can also obtain other information about motor vehicle safety from safercar.gov.

Reporting Safety Defects to the Canadian Government

If you live in Canada, and you believe that your vehicle has a safety defect, notify Transport Canada immediately, in addition to notifying General Motors of Canada Limited. Call them at 1-800-333-0510 or write to:

Transport Canada
Road Safety Branch
2780 Sheffield Road
Ottawa, Ontario K1B 3V9

Reporting Safety Defects to General Motors

In addition to notifying NHTSA (or Transport Canada) in a situation like this, please notify General Motors.

Call 1-800-762-2737, or write:

Pontiac Customer Assistance Center
P.O. Box 33172
Detroit, MI 48232-5172

In Canada, call 1-800-263-3777 (English) or 1-800-263-7854 (French), or write:

General Motors of Canada Limited
Customer Communication Centre, CA1-163-005
1908 Colonel Sam Drive
Oshawa, Ontario L1H 8P7

Downloaded from www.Manualslib.com manuals search engine

Service Publications Ordering Information

Service Manuals

Service Manuals have the diagnosis and repair information on engines, transmission, axle suspension, brakes, electrical, steering, body, etc.

Service Bulletins

Service Bulletins give additional technical service information needed to knowledgeably service General Motors cars and trucks. Each bulletin contains instructions to assist in the diagnosis and service of your vehicle.

Owner Information

Owner publications are written specifically for owners and intended to provide basic operational information about the vehicle. The owner manual includes the Maintenance Schedule for all models.

In-Portfolio: Includes a Portfolio, Owner Manual, and Warranty Booklet.

RETAIL SELL PRICE: $35.00 (U.S.) plus processing fee

Without Portfolio: Owner Manual only.

RETAIL SELL PRICE: $25.00 (U.S.) plus processing fee

Current and Past Model Order Forms

Technical Service Bulletins and Manuals are available for current and past model GM vehicles. To request an order form, specify year and model name of the vehicle.

Downloaded from www.Manualslib.com manuals search engine

ORDER TOLL FREE: 1-800-551-4123
Monday-Friday 8:00 AM - 6:00 PM
Eastern Time

For Credit Card Orders Only
(VISA-MasterCard-Discover), visit Helm, Inc.
on the World Wide Web at: helminc.com

Or you can write to:

Helm, Incorporated
P.O. Box 07130
Detroit, MI 48207

Prices are subject to change without notice and without incurring obligation. Allow ample time for delivery.

Note to Canadian Customers: All listed prices are quoted in U.S. funds. Canadian residents are to make checks payable in U.S. funds.

Vehicle Data Recording and Privacy

Your GM vehicle has a number of sophisticated computers that record information about the vehicle's performance and how it is driven. For example, your vehicle uses computer modules to monitor and control engine and transmission performance, to monitor the conditions for airbag deployment and deploy airbags in a crash and, if so equipped, to provide antilock braking to help the driver control the vehicle. These modules may store data to help your dealer/retailer technician service your vehicle. Some modules may also store data about how you operate the vehicle, such as rate of fuel consumption or average speed. These modules may also retain the owner's personal preferences, such as radio pre-sets, seat positions, and temperature settings.

Downloaded from www.Manualslib.com manuals search engine

Event Data Recorders

This vehicle has an Event Data Recorder (EDR). The main purpose of an EDR is to record, in certain crash or near crash-like situations, such as an airbag deployment or hitting a road obstacle, data that will assist in understanding how a vehicle's systems performed. The EDR is designed to record data related to vehicle dynamics and safety systems for a short period of time, typically 30 seconds or less. The EDR in this vehicle is designed to record such data as:

- How various systems in your vehicle were operating
- Whether or not the driver and passenger safety belts were buckled/fastened
- How far, if at all, the driver was pressing the accelerator and/or brake pedal
- How fast the vehicle was traveling

This data can help provide a better understanding of the circumstances in which crashes and injuries occur.

Important: EDR data is recorded by your vehicle only if a non-trivial crash situation occurs; no data is recorded by the EDR under normal driving conditions and no personal data (e.g., name, gender, age, and crash location) is recorded. However, other parties, such as law enforcement, could combine the EDR data with the type of personally identifying data routinely acquired during a crash investigation.

To read data recorded by an EDR, special equipment is required, and access to the vehicle or the EDR is needed. In addition to the vehicle manufacturer, other parties, such as law enforcement, that have the special equipment, can read the information if they have access to the vehicle or the EDR.

GM will not access this data or share it with others except: with the consent of the vehicle owner or, if the vehicle is leased, with the consent of the lessee; in response to an official request of police or similar government office; as part of GM's defense of litigation through the discovery process; or, as required by law. Data that GM collects or receives may also be used for GM research needs or may be made available to others for research purposes, where a need is shown and the data is not tied to a specific vehicle or vehicle owner.

Downloaded from www.Manualslib.com manuals search engine

OnStar®

If the vehicle has OnStar and you subscribe to the OnStar services, please refer to the OnStar Terms and Conditions for information on data collection and use.

Navigation System

If your vehicle has a navigation system, use of the system may result in the storage of destinations, addresses, telephone numbers, and other trip information. Refer to the navigation system operating manual for information on stored data and for deletion instructions.

Radio Frequency Identification (RFID)

RFID technology is used in some vehicles for functions such as tire pressure monitoring and ignition system security, as well as in connection with conveniences such as key fobs for remote door locking/unlocking and starting, and in-vehicle transmitters for garage door openers. RFID technology in GM vehicles does not use or record personal information or link with any other GM system containing personal information.

Radio Frequency Statement

This vehicle has systems that operate on a radio frequency that comply with Part 15 of the Federal Communications Commission (FCC) Rules and with RSS-210/211 of Industry and Science Canada.

Operation is subject to the following two conditions:

1. The device may not cause interference.
2. The device must accept any interference received, including interference that may cause undesired operation of the device.

Changes or modifications to any of these systems by other than an authorized service facility could void authorization to use this equipment.

Downloaded from www.Manualslib.com manuals search engine

A

Accessories and Modifications 6-3
Accessory Power 3-19
Accessory Power Outlets 4-12
Adding Washer Fluid 6-32
Additional Factors Affecting System Operation 2-47
Additional Program Information 8-13
Additional Required Services 7-5
Additives, Fuel 6-6
Add-On Electrical Equipment 6-98
Adjusting the Speakers (Balance/Fade) 4-54
Adjustment
  Chime Level 4-82
Air Cleaner/Filter, Engine 6-21
Air Conditioning 4-13
Airbag
  Adding Equipment to Your Airbag-Equipped Vehicle 2-48
Airbag System
  How Does an Airbag Restrain? 2-40
  Passenger Sensing System 2-43
  Servicing Your Airbag-Equipped Vehicle 2-48
  What Makes an Airbag Inflate? 2-40
  What Will You See After an Airbag Inflates? 2-41
  When Should an Airbag Inflate? 2-39
  Where Are the Airbags? 2-38
Airbags 2-50
  Passenger Status Indicator 4-22
  Readiness Light 4-21
  System Check 2-36
AM 4-81
Antenna
  Fixed Mast 4-82
Antenna, XM™ Satellite Radio Antenna System 4-82
Antilock Brake System (ABS) 5-5
  Warning Light 4-24
Appearance Care
  Aluminum or Chrome-Plated Wheels 6-96
  Care of Safety Belts 6-93
  Chemical Paint Spotting 6-97
  Cleaning Exterior Lamps/Lenses 6-94
  Convertible Top 6-95
  Fabric/Carpet 6-91
  Finish Care 6-94
  Finish Damage 6-97
  Instrument Panel, Vinyl, and Other Plastic Surfaces 6-92
  Interior Cleaning 6-90
  Leather 6-92
  Sheet Metal Damage 6-97
  Tires 6-96
  Underbody Maintenance 6-97
  Washing Your Vehicle 6-93
  Weatherstrips 6-93
  Windshield and Wiper Blades 6-95

Downloaded from www.Manualslib.com manuals search engine

Arming the System 3-15
Ashtray 4-13
Assistance Program, Roadside 8-7
Audio System 4-45, 4-69
  Audio Steering Wheel Controls 4-79
  Radio Reception 4-81
  Setting the Clock 4-46
  Theft-Deterrent Feature 4-79
  XM™ Satellite Radio Antenna System 4-82
Audio System(s) 4-48
Automatic Door Lock 3-9
Automatic Door Unlock 3-9
Automatic Transmission
  Fluid 6-22
  Operation 3-21
Automatic Transmission Shift Lock Control
  System Check 7-8
Axle, Rear 6-40

B

Back-Up Lamps - Ambulance Body
  Bulb Replacement 6-44
Battery 6-35
  Run-Down Protection 4-12
Battery Replacement 3-5
Belt Routing, Engine 7-13
Blizzard Conditions 5-20
Bluetooth Controls 4-69
Bluetooth® 4-69
Brake
  Emergencies 5-5
Brake Adjustment 6-34
Brake Fluid 6-32
Brake Pedal Travel 6-34
Brake Wear 6-34
Brakes 6-32
  Antilock 5-5
  Parking 3-25
  System Warning Light 4-23
Braking 5-4
Braking in Emergencies 5-5
Break-In, New Vehicle 3-17
Bulb Replacement 6-45
  Back-Up Lamps - Ambulance Body 6-44
  Fog Lamps 4-11
  Front Turn Signal, Parking and Fog Lamps 6-43
  Halogen Bulbs 6-42
  Headlamp Aiming 6-41
  Headlamps 6-42
  License Plate Lamps 6-45
  Taillamps, Turn Signal and Stoplamps 6-43, 6-44
Buying New Tires 6-64

Downloaded from www.Manualslib.com manuals search engine

C

California
  Perchlorate Materials Requirements 6-4
  Warning 6-4
California Fuel 6-6
Call Waiting 4-76
Calling for Assistance 8-8
Canada — Customer Assistance 8-6
Canadian Owners iii
Canceling a Remote Start 1-5
Capacities and Specifications 6-104
Carbon Monoxide
  Engine Exhaust 3-28
  Trunk 3-10
  Winter Driving 5-19
Care of
  Safety Belts 6-93
Care of CDs 4-58
Care of the CD Player 4-59
CD Messages 4-58
CD, MP3 4-60
Cellular Phone Usage 4-82
Center Console Storage 3-31
Chains, Tire 6-70
Charging System Light 4-23
Check
  Engine Lamp 4-27
Check Engine Light 4-27
Checking Coolant 6-26
Checking Engine Oil 6-15
Checking Things Under the Hood 6-10
Chemical Paint Spotting 6-97
Child Restraints
  Infants and Young Children 2-25
  Lower Anchors and Tethers for Children 2-31
  Older Children 2-22
  Securing a Child Restraint in the Right Front
    Seat Position 2-32
  Systems 2-29
Chime Level Adjustment 4-82
Cigarette Lighter 4-13
Circuit Breakers 6-99
Cleaning
  Aluminum or Chrome-Plated Wheels 6-96
  Convertible Top 6-95
  Exterior Lamps/Lenses 6-94
  Fabric/Carpet 6-91
  Finish Care 6-94
  Instrument Panel, Vinyl, and Other Plastic
    Surfaces 6-92
  Interior 6-90
  Leather 6-92
  Tires 6-96
  Underbody Maintenance 6-97
  Washing Your Vehicle 6-93
  Weatherstrips 6-93
  Windshield and Wiper Blades 6-95
Clearing the System 4-78

Downloaded from www.Manualslib.com manuals search engine

Climate Control System 4-13
Outlet Adjustment 4-17
Climate Controls 1-13
Clock, Setting 4-46
Clutch, Hydraulic 6-23
Cold Temperature Operation 6-19
Collision Damage Repair 8-13
Collision Parts 8-13
Competitive Driving Mode 5-8
Compressor Kit, Tire Sealant 6-71, 6-80
Connecting a USB Storage Device or iPod® 4-64
Content Theft-Deterrent 3-14
Control of a Vehicle 5-3
Convertible 6-89
Convertible Top 3-35
Coolant
Engine 6-25
Engine Temperature Warning Light 4-26
Low Warning Light 4-26
Cooling System 6-23
Coupe 6-90
Courtesy Transportation Program 8-11
Coverage 8-8
Cruise Control 4-7
Cupholders 3-31
Current and Past Model Order Forms 8-17
Customer Assistance 8-6
Offices 8-6
Text Telephone (TTY) Users 8-6
Customer Information
Service Publications Ordering Information 8-17
Customer Satisfaction Procedure 8-2

D

Damage Repair, Collision 8-13
Data Recorders, Event 8-19
Daytime Running Lamps (DRL) 4-10
Defensive Driving 5-2
Delayed Locking 3-9
Deleting Name Tags 4-73
Disarming the System 3-15
Disc, MP3 4-60
Doing Your Own Service Work 6-4
Door
Automatic Door Lock 3-9
Automatic Door Unlock 3-9
Delayed Locking 3-9
Manual Door Locks 3-8
Power Locks 3-9
Driver
Seat Height Adjuster 2-2

Downloaded from www.Manualslib.com manuals search engine

Driver Information Center (DIC) 4-33
DIC Operation and Displays 4-33
DIC Vehicle Personalization 4-40
DIC Warnings and Messages 4-36
Driving
At Night 5-15
Before a Long Trip 5-17
Defensive 5-2
Drunk 5-2
Highway Hypnosis 5-17
Hill and Mountain Roads 5-18
In Rain and on Wet Roads 5-16
Loss of Control 5-13
Off-Road Recovery 5-13
Rocking Your Vehicle to Get it Out 5-22
Winter 5-19
Driving for Better Fuel Economy 1-20
Driving on Snow or Ice 5-19
Dual Tone Multi-Frequency (DTMF) Tones 4-78

E

EDR 8-18
Ejecting a CD 4-56
Electrical Equipment, Add-On 6-98
Electrical System
Floor Console Fuse Block 6-99
Fuses and Circuit Breakers 6-99
Electrical System (cont.)
Headlamp Wiring 6-99
Power Windows and Other Power Options 6-99
Underhood Fuse Block 6-101
Electronic Immobilizer
PASS-Key® III+ 3-16
Electronic Immobilizer Operation
PASS-Key® III+ 3-16
Electronic Stability Control 5-6
Electronic Stability Control Indicator Light 4-25
Emergency Trunk Release Handle 3-11
Emissions Inspection and Maintenance
Programs 4-30
Ending a Call 4-76
Engine
Air Cleaner/Filter 6-21
Check and Service Engine Soon Lamp 4-27
Compartment Overview 6-12
Coolant 6-25
Coolant Temperature Warning Light 4-26
Cooling System 6-23
Drive Belt Routing 7-13
Exhaust 3-28
Oil 6-15
Overheating 6-29
Starting 3-19
Engine Identification 6-98
Engine Oil
Life System 6-19

Downloaded from www.Manualslib.com manuals search engine

Engine Oil Additives / Engine Oil Flushes 6-19
Entering Personalization Menu 4-40
Entry/Exit Lighting 4-11
Event Data Recorders 8-19
Exiting Personalization Menu 4-44
Express-Down Window 3-14
Extender, Safety Belt 2-22
Exterior Mirrors 1-9

F

Filter
  Engine Air Cleaner 6-21
Finding a Category (CAT) Station
  (XM Satellite Radio Service Only) 4-54
Finding a Station 4-50
Finish Damage 6-97
Fixed Mast Antenna 4-82
Flashers, Hazard Warning 4-3
Flash-to-Pass 4-5
Flat Tire 6-70
Fluid
  Automatic Transmission 6-22
  Power Steering 6-30
  Windshield Washer 6-31
FM Stereo 4-81
Fog Lamps
  Bulb Replacement 4-11
Format 4-60
Fuel 6-5
  Additives 6-6
  California Fuel 6-6
  Filling a Portable Fuel Container 6-10
  Filling the Tank 6-8
  Fuels in Foreign Countries 6-7
  Gage 4-32
  Gasoline Octane 6-6
  Gasoline Specifications 6-6
  Low Fuel Warning Light 4-32
Fuel Economy
  Driving for Better 1-20
Fuses
  Floor Console Fuse Block 6-99
  Fuses and Circuit Breakers 6-99
  Underhood Fuse Block 6-101

G

Gages
  Fuel 4-32
  Speedometer 4-19
  Tachometer 4-19
Gasoline
  Octane 6-6
  Specifications 6-6
Glove Box 3-31
GM Mobility Reimbursement Program 8-7

Downloaded from www.Manualslib.com manuals search engine

H

Halogen Bulbs 6-42
Hazard Warning Flashers 4-3
Headlamp Wiring 6-99
Headlamps 4-9, 6-42
  Aiming 6-41
  Bulb Replacement 6-42
  Daytime Running Lamps (DRL) 4-10
  Flash-to-Pass 4-5
  Front Turn Signal, Parking and Fog Lamps 6-43
  High/Low Beam Changer 4-5
  On Reminder 4-10
Heater 4-13
Height Adjuster, Driver Seat 2-2
Highbeam On Light 4-31
Highway Hypnosis 5-17
Hill and Mountain Roads 5-18
Hood
  Checking Things Under 6-10
  Release 6-11
Horn 4-3
How OnStar Service Works 1-22
How the System Alarm is Activated 3-15
How to Add Coolant to the Surge Tank 6-26
How to Check 6-55
How to Check Lubricant 6-41
How to Check Power Steering Fluid 6-31
How to Detect a Tamper Condition 3-15
How to Inspect the Engine Air Cleaner/Filter 6-22
How to Reset the Engine Oil Life System 6-20
How to Turn Off the System Alarm 3-15
How to Wear Safety Belts Properly 2-11
Hydraulic Clutch 6-23
Hydroplaning 5-16

I

If a Crash Occurs 8-14
If No Steam Is Coming From The Engine
  Compartment 6-30
If Steam Is Coming From The Engine
  Compartment 6-29
If the Off Indicator is Lit for an Adult-Size
  Occupant 2-46
If the On Indicator is Lit for a Child Restraint 2-46
Ignition Positions 3-18
Ignition Transmission Lock Check 7-9
Infants and Young Children, Restraints 2-25
Inflation - Tire Pressure 6-54
Information Modes 4-33
Installing the Roof Panel 3-34
Instrument Panel
  Brightness 4-11
  Cluster 4-18
Insuring Your Vehicle 8-14
Interior Mirror 1-10
Introduction 7-2

Downloaded from www.Manualslib.com manuals search engine

J

Jump Starting 6-36

K

Keyless Entry
Remote (RKE) System 3-4
Keyless Entry System 3-3
Keys 3-2

L

Labeling, Tire Sidewall 6-49
Lamps
Back-Up 6-44
Daytime Running (DRL) 4-10
License Plate 6-45
Malfunction Indicator 4-27
Mirror Reading 4-11
Lap-Shoulder Belt 2-19
LATCH System for Child Restraints 2-31
Latches, Seatback 2-5
Leaving the Vehicle With the Engine Running
(Automatic Transmission) 3-26
Lighting
Entry/Exit 4-11
Lights 4-9
Airbag Readiness 4-21
Antilock Brake System (ABS) Warning 4-24
Brake System Warning 4-23
Charging System 4-23
Engine Coolant Temperature Warning 4-26
Flash-to-Pass 4-5
Highbeam On 4-31
High/Low Beam Changer 4-5
Low Coolant Warning 4-26
Low Fuel Warning 4-32
Oil Pressure 4-30
On Reminder 4-10
Passenger Airbag Status Indicator 4-22
Safety Belt Reminders 4-20
Security 4-31
Tire Pressure 4-27
Trunk Ajar 4-31
Limited-Slip Rear Axle 5-11
Loading a CD 4-56
Loading Your Vehicle 5-22
Locks
Automatic Door Lock 3-9
Automatic Door Unlock 3-9
Delayed Locking 3-9
Manual Door 3-8
Power Door 3-9

Downloaded from www.Manualslib.com manuals search engine

Loss of Control 5-13
Low Coolant Warning Light 4-26
Low Fuel Warning Light 4-32
Lower Anchors and Tethers for Children 2-31
Lowering the Manual Convertible Top 3-37
Low-Profile Tires 6-48

M

Maintenance Schedule
  Maintenance Record 7-14
  Maintenance Replacement Parts 7-12
  Owner Checks and Services 7-8
  Recommended Fluids and Lubricants 7-10
  Scheduled Maintenance 7-3
Maintenance I 7-4
Maintenance II 7-4
Making a Call 4-74
Malfunction Indicator Lamp 4-27
Managing the Vehicle Damage Repair Process 8-15
Manual Locks 1-5
Manual Seats 2-2
Manual Transmission
  Fluid 6-23
  Operation 3-23
Manual Windows 3-13
Message
  DIC Warnings and Messages 4-36
Mirror Reading Lamps 4-11
Mirrors
  Manual Rearview 3-30
  Outside Manual Mirrors 3-30
  Outside Power Mirrors 3-30
MP3 4-60
Muting a Call 4-76
My GM Canada (Canada) — www.gm.ca 8-5

N

Navigation System, Privacy 8-20
New Vehicle Break-In 3-17

O

Odometer 4-19
Off-Road
  Recovery 5-13
Oil
  Engine 6-15
  Engine Oil Life System 6-19
  Pressure Light 4-30
Older Children, Restraints 2-22
Online Owner Center 8-5
Online Owner Center (U.S.) —
  www.gmownercenter.com/pontiac 8-5
OnStar, Privacy 8-20
OnStar Steering Wheel Controls 1-23

Downloaded from www.Manualslib.com manuals search engine

Other Information 4-79
Other Rainy Weather Tips 5-16
Outlet Adjustment 4-17
Outlets
  Accessory Power 4-12
Outside
  Manual Mirrors 3-30
  Power Mirrors 3-30
Overseas — Customer Assistance 8-6
Owner Checks and Services 7-8
Owner Information 8-17
Owners, Canadian iii

P

Paint, Damage 6-97
Pairing 4-70
Panel, Roof 3-32
Park
  Shifting Into 3-26
  Shifting Out of 3-27
Parking
  Brake 3-25
  Over Things That Burn 3-28
Parking Brake and Automatic Transmission
  P (Park) Mechanism Check 7-9
Parking Your Vehicle 3-27
Passenger Airbag Status Indicator 4-22
Passenger Safety Belt Reminder Light 4-20
Passenger Sensing System 2-43
Passing 5-13
PASS-Key® III+ Electronic Immobilizer 3-16
PASS-Key® III+ Electronic Immobilizer
  Operation 3-16
Perchlorate Materials Requirements, California 6-4
Personalization Menu Modes 4-41
Phone
  Bluetooth® 4-69
Playing a CD 4-57
Playing a CD-R or CD-RW MP3 4-62
Playing an MP3 CD-R or CD-RW Disc 4-58
Playing the Radio 4-49
Power
  Door Locks 3-9
  Electrical System 6-99
  Retained Accessory (RAP) 3-19
  Steering Fluid 6-30
  Windows 3-13
Power Door Locks 1-5
Power Steering 5-11
Pregnancy, Using Safety Belts 2-21
Privacy 8-18
  Navigation System 8-20
  OnStar 8-20
  Radio Frequency Identification (RFID) 8-20
Program
  Courtesy Transportation 8-11
Programming Transmitters to the Vehicle 3-5
Proposition 65 Warning, California 6-4
Propriétaires Canadiens iii

Downloaded from www.Manualslib.com manuals search engine

Q

Questions and Answers About Safety Belts 2-10

R

Radio Data System (RDS) 4-49
Radio Frequency
  Identification (RFID) 8-20
  Statement 8-20
Radio Messages 4-55
Radio(s) 4-48
Radios
  Reception 4-81
  Setting the Clock 4-46
  Theft-Deterrent 4-79
Raising the Manual Convertible Top 3-38
Rear Axle 6-40
  Limited-Slip 5-11
Rear Window Defogger 4-16
Rearview Mirrors 3-30
Receiving a Call 4-76
Reclining Seatbacks 2-3
Recommended Fluids and Lubricants 7-10
Recreational Vehicle Towing 5-28
Reimbursement Program, GM Mobility 8-7
Remote Keyless Entry (RKE) System 3-3, 3-4
Remote Trunk Release 3-11
Remote Vehicle Start 3-6
Removal and Installation of the
  Sealant Canister 6-79, 6-88
Removing the Roof Panel 3-32
Repair Facility 8-14
Replacement Bulbs 6-45
Replacement Parts
  Maintenance 7-12
Replacing Brake System Parts 6-34
Reporting Safety Defects
  Canadian Government 8-16
  General Motors 8-16
  U.S. Government 8-16
Restraint System Check
  Checking the Restraint Systems 2-50
  Replacing Restraint System Parts
    After a Crash 2-51
Retained Accessory Power (RAP) 3-19
Ride Control Systems 5-6
  Electronic Stability (ESC) 5-6
  Limited Slip Rear Axle 5-11
Roadside Assistance Program 8-7
Rocking Your Vehicle to Get it Out 5-22
Roof Panel 3-32
  Installing the Roof Panel 3-34
  Removing the Roof Panel 3-32
Running the Vehicle While Parked 3-29

Downloaded from www.Manualslib.com manuals search engine

S

Safety Belt Pretensioners 2-21
Safety Belt Reminder Light 4-20
Safety Belts 2-50
  Care of 6-93
  Extender 2-22
  How to Wear Safety Belts Properly 2-11
  Lap-Shoulder Belt 2-19
  Reminders 4-20
  Safety Belts Are for Everyone 2-6
  Use During Pregnancy 2-21
Safety Defects Reporting
  Canadian Government 8-16
  General Motors 8-16
  U.S. Government 8-16
Safety Warnings and Symbols iv
Scheduled Maintenance 7-3
Scheduling Appointments 8-11
Sealant Kit, Tire 6-71, 6-80
Seatback Latches 2-5
Seats
  Driver Seat Height Adjuster 2-2
  Reclining Seatbacks 2-3
Securing a Child Restraint
  Right Front Seat Position 2-32
Securing an Add-on Child Restraint in the
  Vehicle 2-30
Securing the Child Within the Child Restraint 2-31
Security
  Light 4-31
Service 6-3
  Accessories and Modifications 6-3
  Adding Equipment to the Outside of the
    Vehicle 6-5
  Doing Your Own Work 6-4
  Engine Soon Lamp 4-27
  Parts Identification Label 6-98
  Publications Ordering Information 8-17
  Scheduling Appointments 8-11
Service Bulletins 8-17
Service Manuals 8-17
Services Not Included in Roadside Assistance 8-9
Services Provided 8-9
Services Specific to Canadian Purchased
  Vehicles 8-10
Servicing Your Airbag-Equipped Vehicle 2-48
Setting the Clock 1-15, 4-46
Setting the Tone (Bass/Midrange/Treble) 4-53
Sheet Metal Damage 6-97
Shifting
  Out of Park 3-27
Shifting Into Park 3-26
Signals, Turn and Lane-Change 4-4
Skidding 5-14
Specifications and Capacities 6-104
Speedometer 4-19
Start Vehicle, Remote 3-6
Starter Switch Check 7-8

Downloaded from www.Manualslib.com manuals search engine

Starting the Engine 3-19
Starting the Vehicle 1-5
Steering 5-11
Steering in Emergencies 5-12
Steering Tips 5-11
Steering Wheel Controls, Audio 4-79
Steering Wheel, Tilt Wheel 4-3
Storage Areas
  Center Console 3-31
  Cupholders 3-31
  Glove Box 3-31
Storing a Favorite Station 1-14
Storing Name Tags 4-71
Storing Radio Stations 4-51
Storing the Roof Panel 3-34
Storing the Tire Sealant and Compressor Kit 6-89
Stuck in Sand, Mud, Ice, or Snow 5-21
Sun Visors 3-14
System Identification 6-71, 6-80

T

Tachometer 4-19
Taillamps
  Turn Signal, and Stoplamps 6-43, 6-44
Temperature – A, B, C 6-67
Text Telephone (TTY) Users 8-6
Theft-Deterrent Feature 4-79
Theft-Deterrent Systems 3-14
  Content Theft-Deterrent 3-14
  PASS-Key® III+ Electronic Immobilizer 3-16
  PASS-Key® III+ Electronic Immobilizer
    Operation 3-16
Three-Way Calling 4-76
Tilt Wheel 4-3
Time, Setting 4-46
Tire Sealant 6-74, 6-83
Tire Size 6-50
Tires 6-47
  Aluminum or Chrome-Plated Wheels,
    Cleaning 6-96
  Buying New Tires 6-64
  Chains 6-70
  Cleaning 6-96
  Different Size 6-65
  If a Tire Goes Flat 6-70
  Inflation - Tire Pressure 6-54
  Inspection and Rotation 6-61
  Pressure Light 4-27
  Pressure Monitor Operation 6-56
  Pressure Monitor System 6-55
  Sealant and Compressor Kit 6-71, 6-80, 6-89
  Sidewall Labeling 6-49
  Terminology and Definitions 6-51
  Uniform Tire Quality Grading 6-66
  Wheel Alignment and Tire Balance 6-67

Downloaded from www.Manualslib.com manuals search engine

Tires (cont.)
Wheel Replacement 6-67
When It Is Time for New Tires 6-63
Winter 6-48
Federal Communications Commission (FCC) and Industry and Science Canada 6-56
Mexico, Central America and Caribbean Islands/ Countries (Except Puerto Rico and U.S. Virgin Islands) — Customer Assistance 8-7
Torque Lock (Automatic Transmission) 3-27
Towing
Recreational Vehicle 5-28
Towing a Trailer 5-28
Your Vehicle 5-28
TPMS Malfunction Light and Message 6-58
TPMS Matching Process for Vehicles with Remote Keyless Entry (RKE) 6-59
TPMS Matching Process for Vehicles without Remote Keyless Entry (RKE) 6-60
TPMS Sensor Matching Process 6-59
Traction
Control System (TCS) 5-9
Limited-Slip Rear Axle 5-11
Traction Control Operation 5-10
Traction – AA, A, B, C 6-66
Transferring a Call 4-77
Transmission
Fluid, Automatic 6-22
Fluid, Manual 6-23
Transmission Operation, Automatic 3-21
Transmission Operation, Manual 3-23
Transportation Options 8-12
Transportation Program, Courtesy 8-11
Treadwear 6-66
Treadwear 200 Traction AA Temperature A 6-66
Trunk 3-10
Trunk Ajar Light 4-31
Turn and Lane-Change Signals 4-4
Turn Signal/Multifunction Lever 4-4

U

Uniform Tire Quality Grading 6-66
United States — Customer Assistance 8-6
Using ABS 5-5
Using Softkeys to Control a USB Storage Device or iPod 4-65
Using the Auxiliary Input Jack 4-59
Using the Radio to Control a USB Storage Device or iPod 4-64
Using the Tire Sealant and Compressor Kit to Temporarily Seal and Inflate a Punctured Tire 6-74, 6-83
Using the Tire Sealant and Compressor Kit without Sealant to Inflate a Tire (Not Punctured) 6-77, 6-86
Using the USB Port 4-60

Downloaded from www.Manualslib.com manuals search engine

V

Vehicle
- Control 5-3
- Loading 5-22
- Parking Your 3-27
- Remote Start 3-6
- Running While Parked 3-29
- Symbols iv

Vehicle Data Recording and Privacy 8-18
Vehicle Identification
- Number (VIN) 6-98
- Service Parts Identification Label 6-98

Vehicle Personalization
- DIC 4-40

Vehicle Storage 6-35
Ventilation Adjustment 4-17
Visors 3-14
Voice Pass-Thru 4-77
Voice Recognition 4-69

W

Warning Lights, Gages, and Indicators 4-17
Warnings
- DIC Warnings and Messages 4-36
- Hazard Flashers 4-3
- Safety and Symbols iv

What Kind of Engine Oil to Use 6-17
What to Do with Used Oil 6-20
What to Use 6-25, 6-31, 6-41
Wheels
- Alignment and Tire Balance 6-67
- Different Size 6-65
- Replacement 6-67

When It Is Time for New Tires 6-63
When the Change Oil Soon Message Displays 7-3
When to Add Engine Oil 6-16
When to Change Engine Oil 6-19
When to Check 6-55
When to Check Lubricant 6-40

Downloaded from www.Manualslib.com manuals search engine

When to Check Power Steering Fluid 6-31
When to Inspect the Engine Air Cleaner/Filter 6-21
Why Safety Belts Work 2-7
Windows 3-12
  Manual 3-13
  Power 3-13
Windshield
  Washer 4-6
  Washer Fluid 6-31
  Wiper Blade Replacement 6-46
  Wiper Blades, Cleaning 6-95
  Wipers 4-5
Winter Driving 5-19
Winter Tires 6-48
With Date Display 4-46
Without Date Display 4-46

X

XM Radio Messages 4-67
XM Satellite Radio Service 4-55
XM™ Satellite Radio
  Antenna 4-82
XM™ Satellite Radio Service 4-81

Y

Your Responsibility 1-23

Downloaded from www.Manualslib.com manuals search engine