AIR CONDITIONING SYSTEM

PRECAUTION

1. **IF ANY OF FOLLOWING CONDITIONS ARE MET, KEEP ENGINE IDLING WITH A/C ON (ENGINE SPEED AT LESS THAN 2000 RPM) FOR AT LEAST 1 MINUTE:**
   - Refrigerant gas has been refilled or A/C parts have been replaced.
   - Long time has elapsed since engine was stopped.

   NOTICE:
   If the engine speed exceeds 2,000 rpm, the A/C compressor may be damaged.
2. **DO NOT HANDLE REFRIGERANT IN ENCLOSED AREAS OR NEAR OPEN FLAMES**
3. **ALWAYS WEAR EYE PROTECTION**

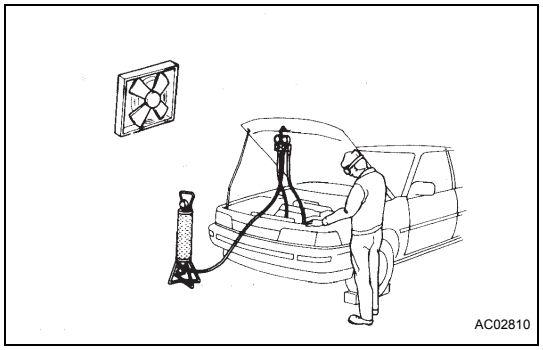

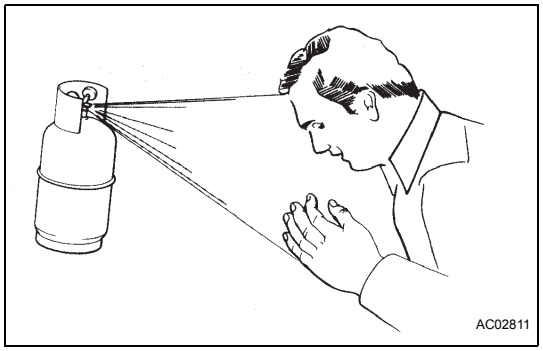

4. **BE CAREFUL NOT TO GET LIQUID REFRIGERANT IN YOUR EYES OR ON YOUR SKIN**
   If liquid refrigerant gets in your eyes or on your skin:
   (a) Wash the area with lots of cold water.
   CAUTION:
   Do not rub your eyes or skin.
   (b) Apply clean petroleum jelly to the skin.
   (c) Go immediately to a hospital or see a physician for professional treatment.
5. **NEVER HEAT CONTAINER OR EXPOSE IT TO NAKED FLAMES**
6. **BE CAREFUL NOT TO DROP CONTAINER OR SUBJECT IT TO PHYSICAL SHOCKS**

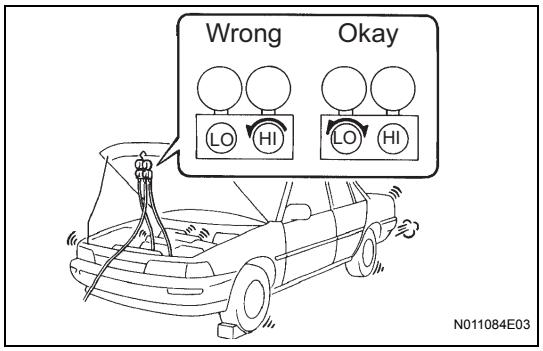

7. **DO NOT OPERATE COMPRESSOR WITH INSUFFICIENT REFRIGERANT IN REFRIGERANT SYSTEM**
   If there is not enough refrigerant in the refrigerant system, oil lubrication will be insufficient and compressor burnout may occur. Necessary care should be taken to avoid this.
8. **DO NOT OPEN HIGH PRESSURE MANIFOLD VALVE WHILE COMPRESSOR IS OPERATING**
   Open and close only the low pressure valve. Opening and closing the high pressure valve could cause the charging cylinder to rupture.

9. **BE CAREFUL NOT TO OVERCHARGE SYSTEM WITH REFRIGERANT**
   If the refrigerant is overcharged, it causes problems such as insufficient cooling, poor fuel economy and engine overheating.
10. **DO NOT OPERATE ENGINE AND COMPRESSOR WITHOUT REFRIGERANT**
    CAUTION:
    This may damage the inside of the compressor.

PARTS LOCATION

HATCHBACK:

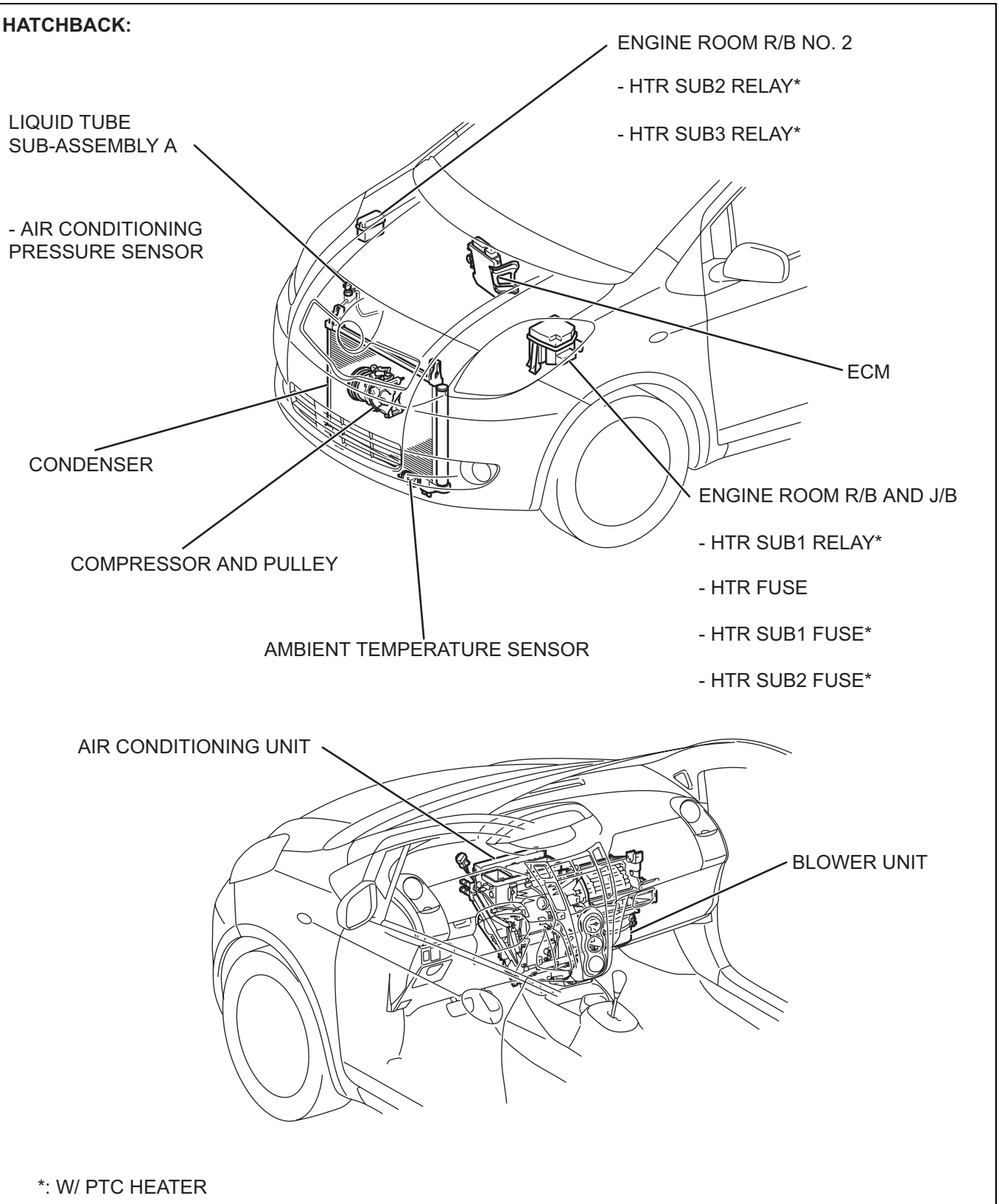

*: W/ PTC HEATER

H

E114512E05

SEDAN:

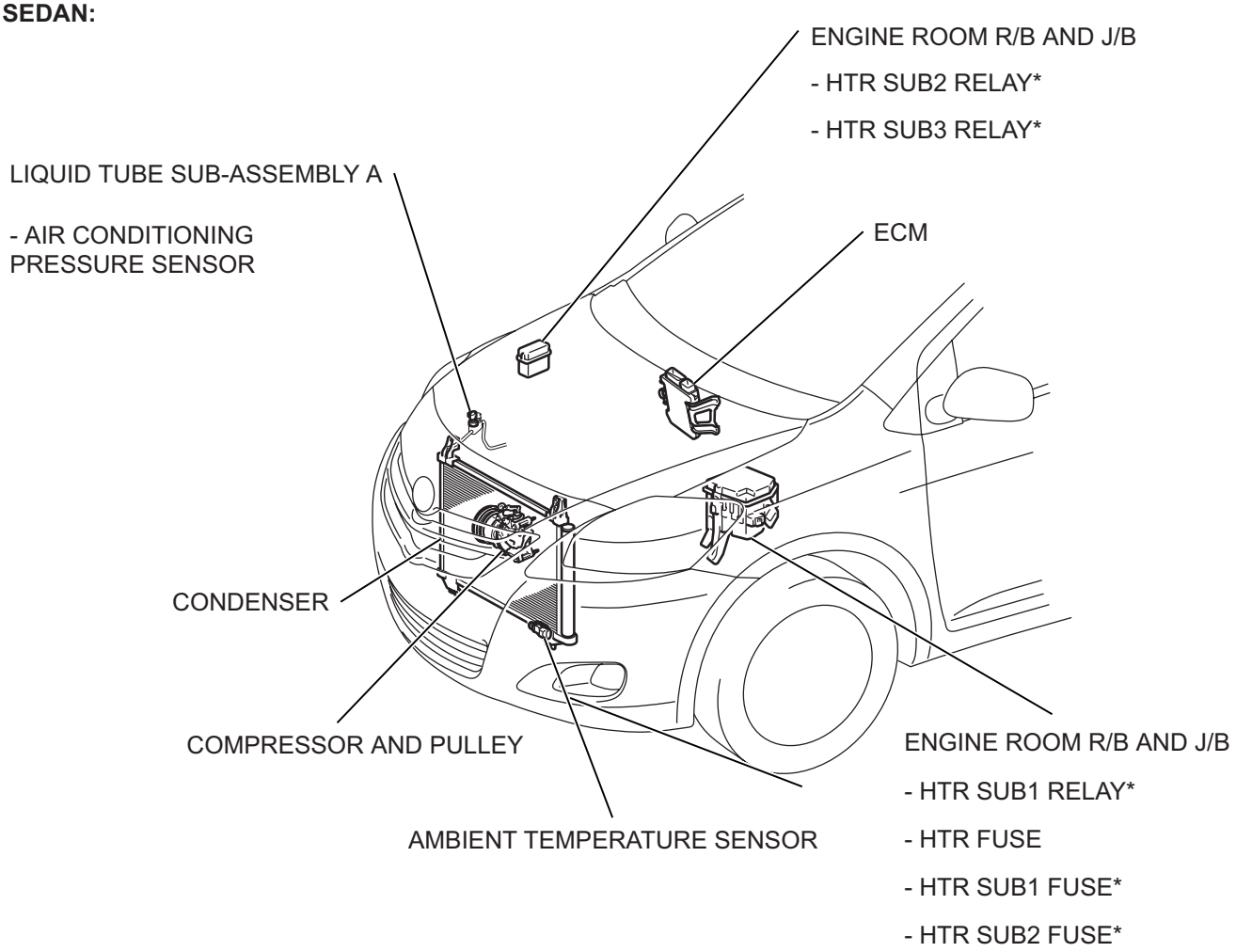

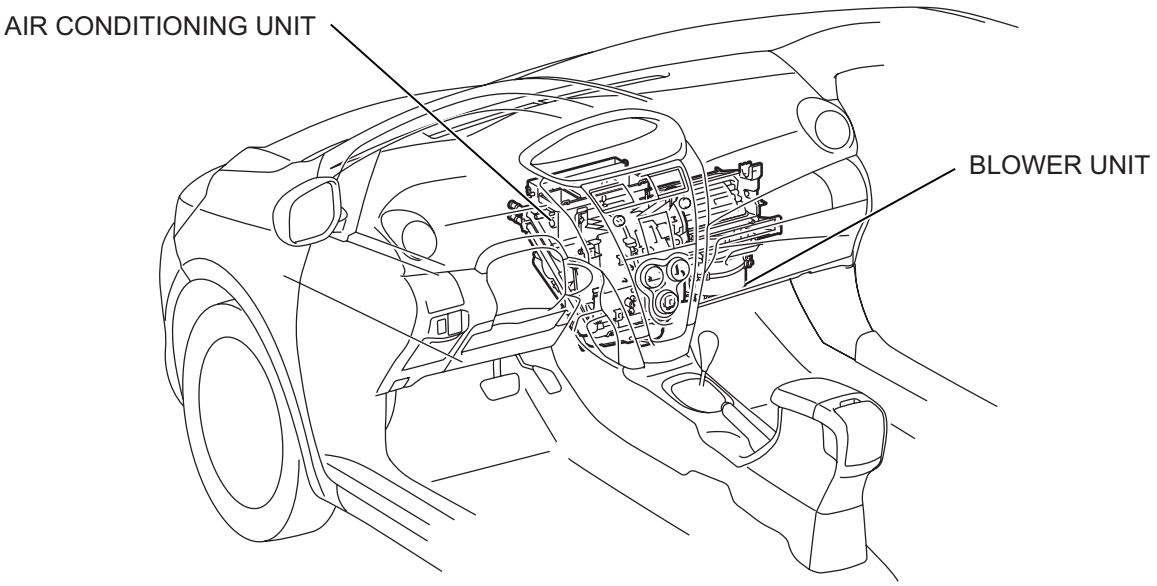

*: W/PTC HEATER

E133589E01

HATCHBACK:

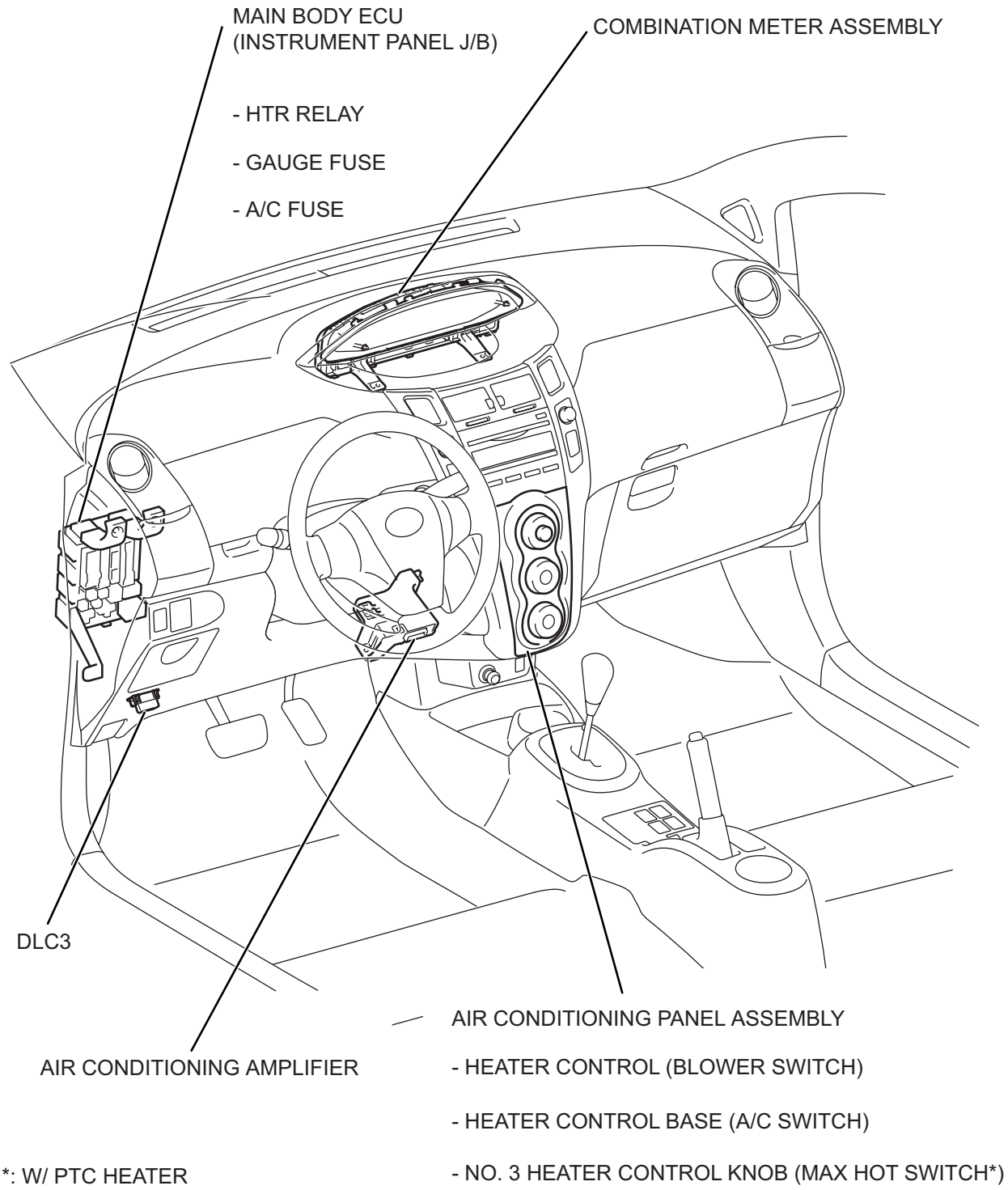

*: W/ PTC HEATER

E119791E03

SEDAN:

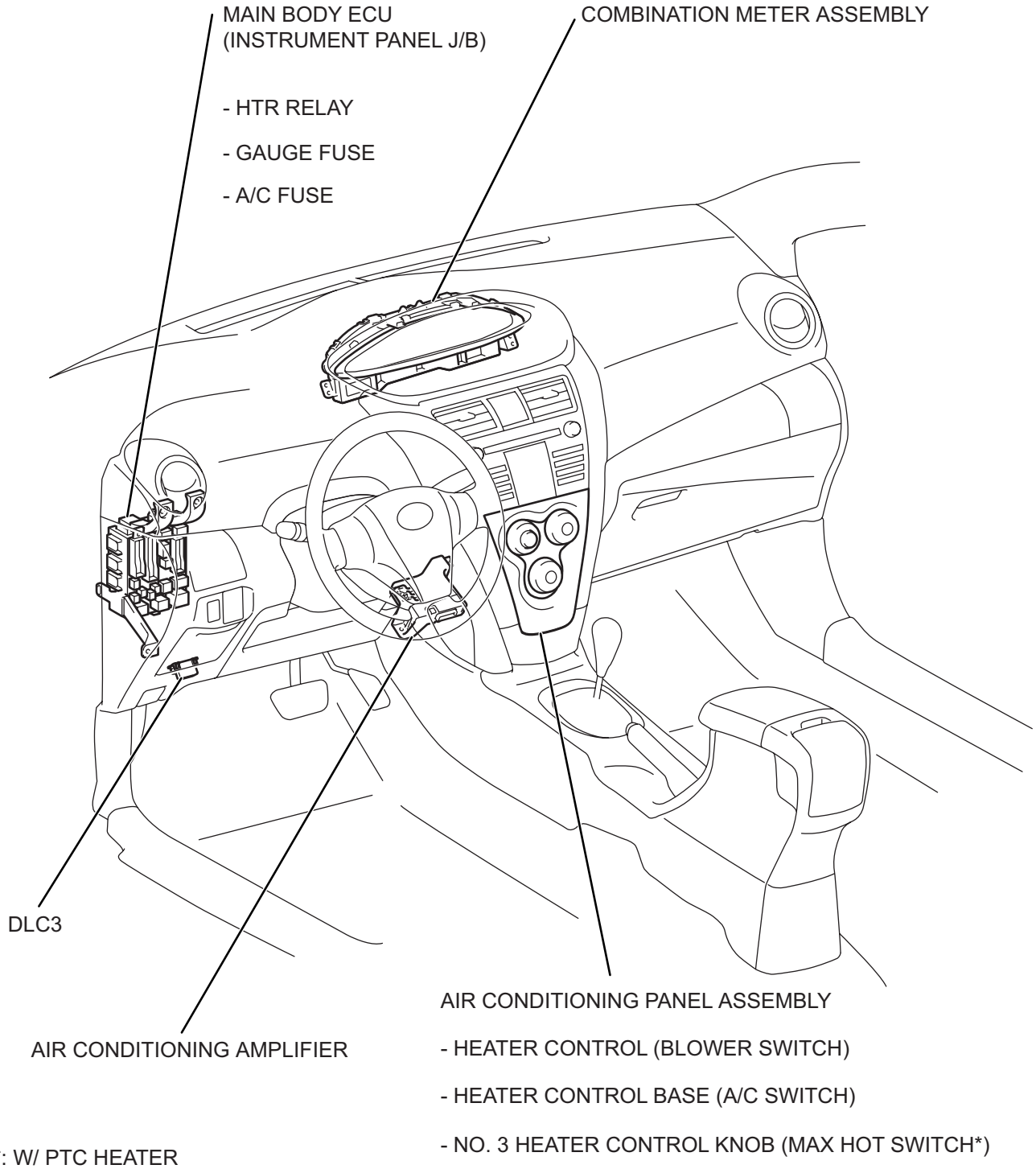

*: W/ PTC HEATER

E133590E01

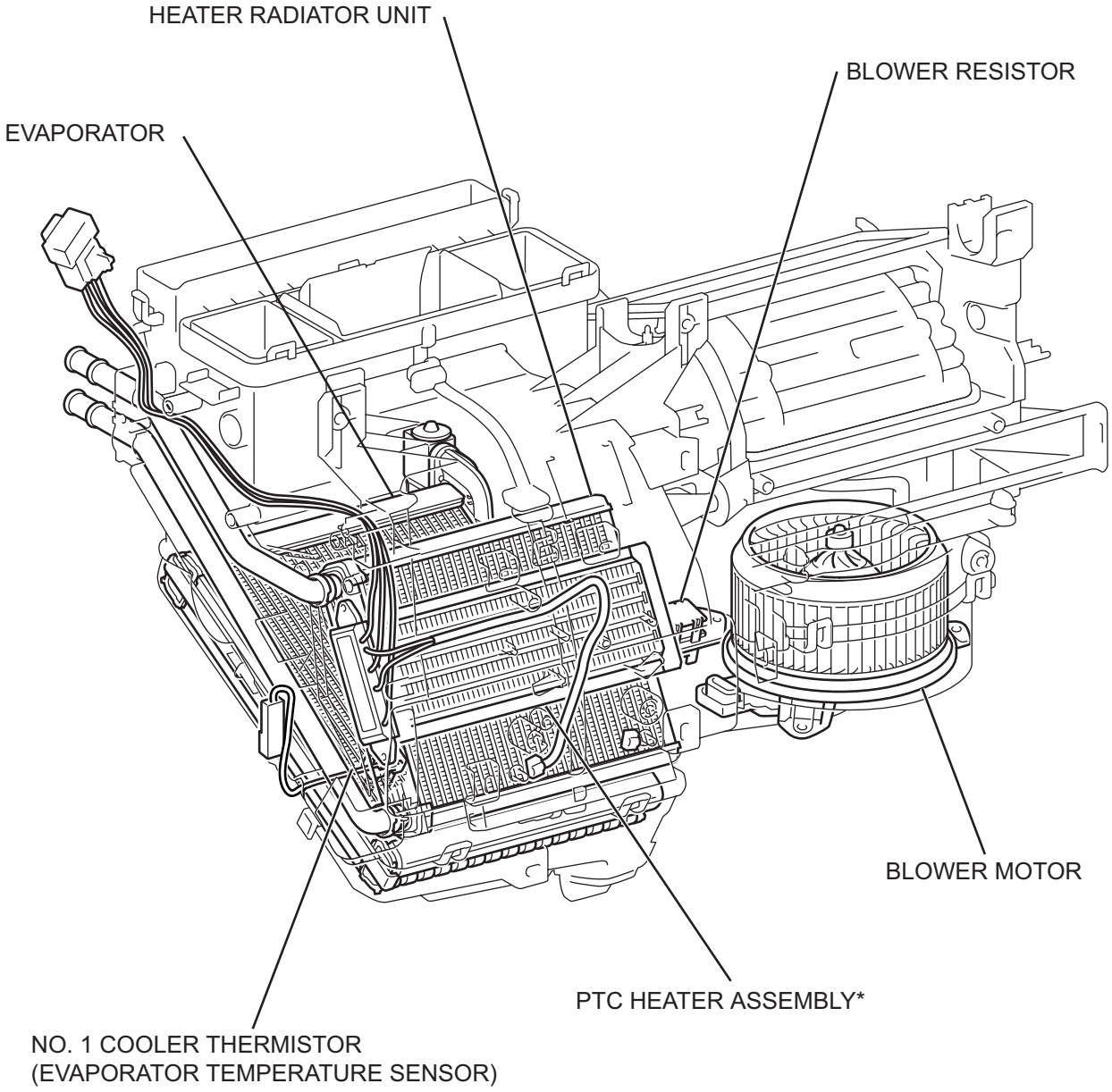

*: W/ PTC HEATER

E114503E10

SYSTEM DIAGRAM

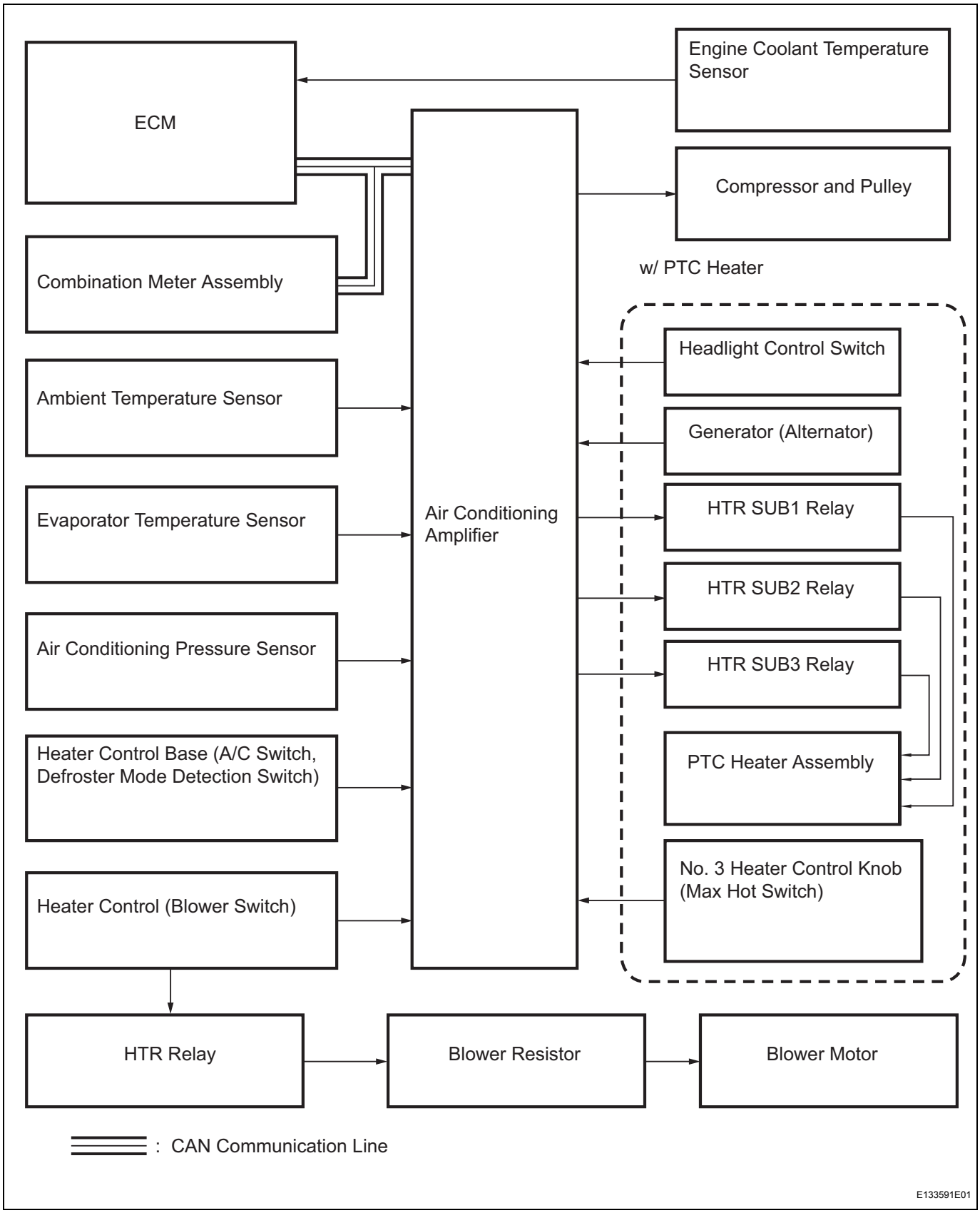

Communication table

Sender	Receiver	Signal	Communication line
Air conditioning amplifier	ECM	A/C compressor control signal	CAN
		Idle up request signal	
		Cooling fan motor driving request	
		PTC driving number request signal	
		Ambient temperature signal	
		External variable control solenoid current signal	
Combination meter	Air conditioning amplifier	Vehicle speed signal	CAN
ECM	Air conditioning amplifier	Engine revolution speed signal	CAN
		Engine coolant temperature signal	
		A/C control cut signal	
		Variable control prohibition signal	
		PTC heater permission number	

SYSTEM DESCRIPTION

1. GENERAL

(a) The air conditioning system has the following features:
The air conditioning amplifier controls the operation of parts, such as the air conditioning compressor, automatically in accordance with the operating conditions of the air conditioning system.

2. MODE POSITION AND DAMPER OPERATION

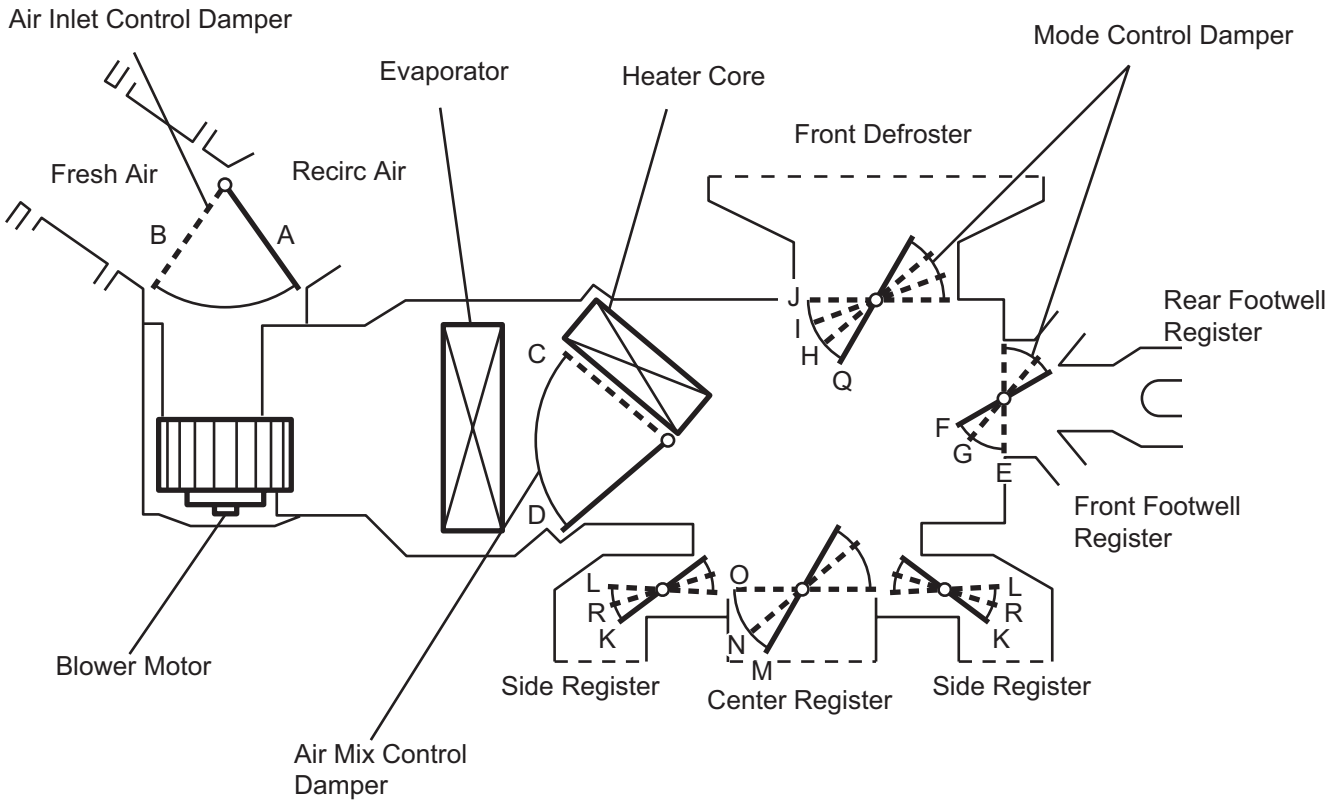

E115027E03

Control Damper	Control Position	Damper Position	Operation
Air Inlet Control Damper	FRESH	A	Allows outside air to enter.
	RECIRC	B	Recirculates internal air.
Air Mix Control Damper	COOL to HOT	C, D	Continuously changes mix ratio of warm and cool air between COOL and HOT.

Control Damper	Control Position	Damper Position	Operation
Mode Control Damper	FACE	M, L, E, J	Blows air from center register and side registers.
	BI-LEVEL	N, R, F, J	Blows air from center register, side registers, front footwell register and rear footwell register.
	FOOT	O, K, F, I	Blows air from side registers, front footwell register, and rear footwell register. Also, blows some air from front defroster.
	FOOT/DEF	O, K, G, H	Blows air from front defroster, side registers, front footwell register, and rear footwell register.
	DEF	O, R, E, Q	Blows air from front defroster and side registers.

3. AIR OUTLET AND AIR FLOW VOLUME

HATCHBACK:

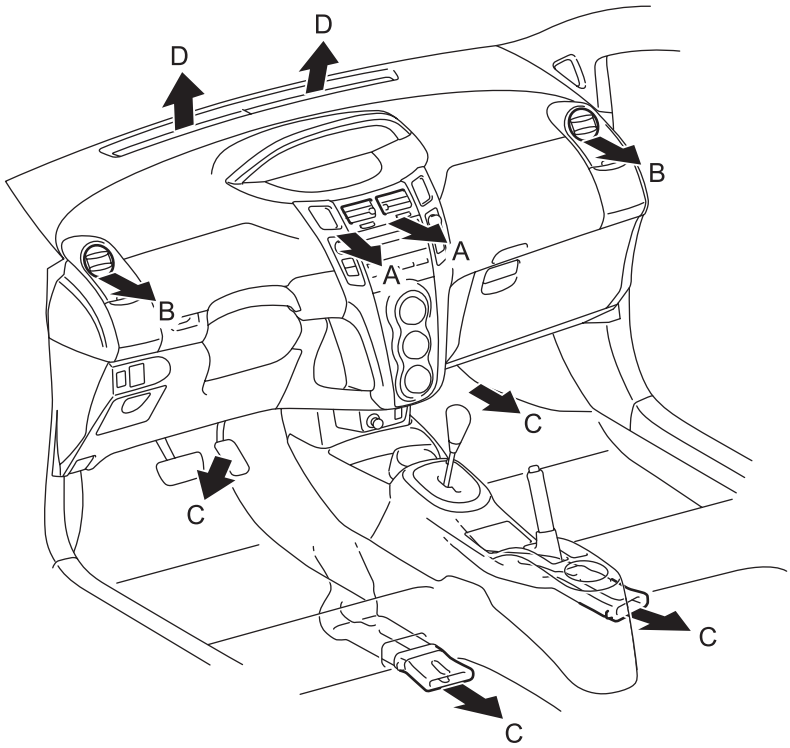

SEDAN:

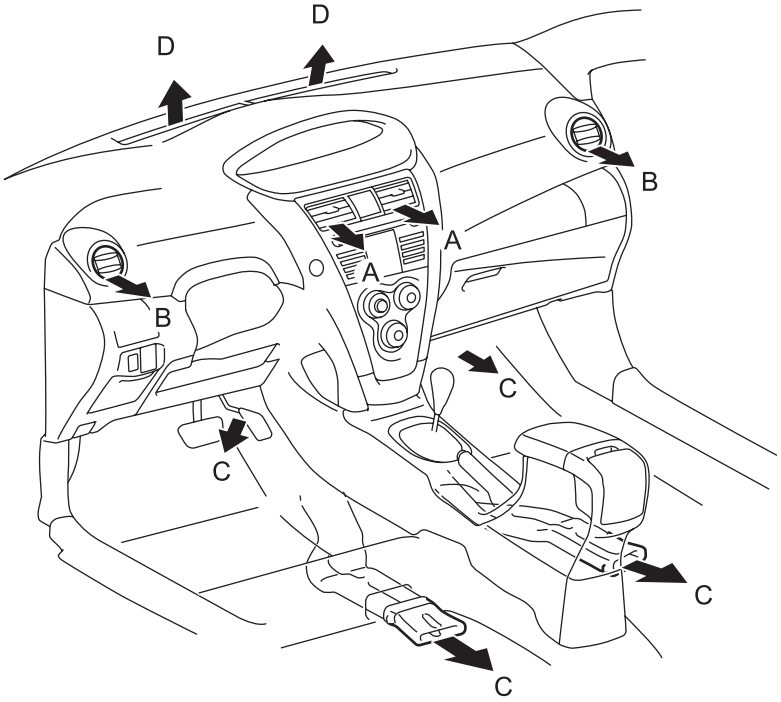

E133592E01

The circle size (○) indicates the proportion of the flow volume.

Air Outlet Mode		Air Outlet Position Symbol			
		A	**B**	**C**	**D**
		Center Face	**Side Face**	**Foot**	**Defroster**
	FACE	◯	◯	X	X
	BI-LEVEL	○	○	◯	X
	FOOT	X	○	◯	○
	FOOT/DEF	X	○	○	○
	DEF	X	○	X	◯

HOW TO PROCEED WITH TROUBLESHOOTING

HINT:
- Use these procedures to troubleshoot the air conditioning system.
- Use an intelligent tester in steps 4, 5 and 7.

1 VEHICLE BROUGHT TO WORKSHOP

NEXT

2 CUSTOMER PROBLEM ANALYSIS AND SYMPTOM CHECK

NEXT

3 INSPECT BATTERY VOLTAGE

Standard voltage:
11 to 14 V
If the voltage is below 11 V, recharge or replace the battery before proceeding.

NEXT

4 CHECK CAN COMMUNICATION SYSTEM

(a) Use an intelligent tester to check if the CAN communication system is functioning.
Result

Result	Proceed to
CAN DTC is not output	A
CAN DTC is output	B

B → **GO TO CAN COMMUNICATION SYSTEM**

A

5 CHECK DTC

(a) Check for DTCs and write down any DTCs that are output.
(b) Clear the DTCs.
(c) Referring to the DTCs written above, simulate the DTC output conditions and check whether any DTCs of the air conditioning system recur.
Result

Result	Proceed to
DTC is not output	A

Result	Proceed to
DTC is output	B

B → GO TO STEP 8

A

6 REFER TO PROBLEM SYMPTOMS TABLE

(See page AC-15)

Result	Proceed to
Fault is not listed in problem symptoms table	A
Fault is listed in problem symptoms table	B

B → GO TO STEP 8

A

7 OVERALL ANALYSIS AND TROUBLESHOOTING

(a) Data List / Active Test (See page AC-20).
(b) Terminals of ECU (See page AC-16).

NEXT

8 ADJUST, REPAIR OR REPLACE

NEXT

9 CONFIRMATION TEST

NEXT

END

PROBLEM SYMPTOMS TABLE

HINT:
Use the table below to help determine the causes of the problem symptom. The potential causes of the symptoms are listed in order of probability in the "Suspected Area" column of the table. Check each symptom by checking the suspected areas in the order they are listed. Replace parts as necessary.

Air conditioning system

Symptom	Suspected area	See page
No functions of A/C system operate	A/C Fuse	-
	Wire harness or connector	-
	Air conditioning amplifier	AC-16
Airflow Control: blower motor does not operate	HTR, GAUGE Fuse	-
	Blower motor circuit	AC-43
	Wire harness or connector	-
Airflow Control: blower motor does not change speed	Blower resistor	AC-203
	Blower motor	AC-200
	Heater control (for Hatchback)	AC-254
	Heater control (for Sedan)	AC-243
Temperature Control: No cool air comes out	Refrigerant volume	AC-62
	Refrigerant pressure	AC-62
	Heater control base (for Hatchback)	AC-253
	Heater control base (for Sedan)	AC-242
	Air conditioning pressure sensor	AC-230
	Compressor and pulley	AC-207
	Expansion valve	-
	Air conditioning amplifier	AC-16
	ECM	ES-26
	CAN communication	CA-9
Compressor and pulley do not operate	A/C Fuse	-
	Refrigerant pressure	AC-62
	Compressor and pulley	AC-207
	Air conditioning pressure sensor	AC-230
	Evaporator temperature sensor (for Hatchback)	AC-137
	Evaporator temperature sensor (for Sedan)	AC-96
	Air conditioning amplifier	AC-16
	ECM	ES-26
	CAN communication	CA-9

TERMINALS OF ECU

1. CHECK AIR CONDITIONING AMPLIFIER

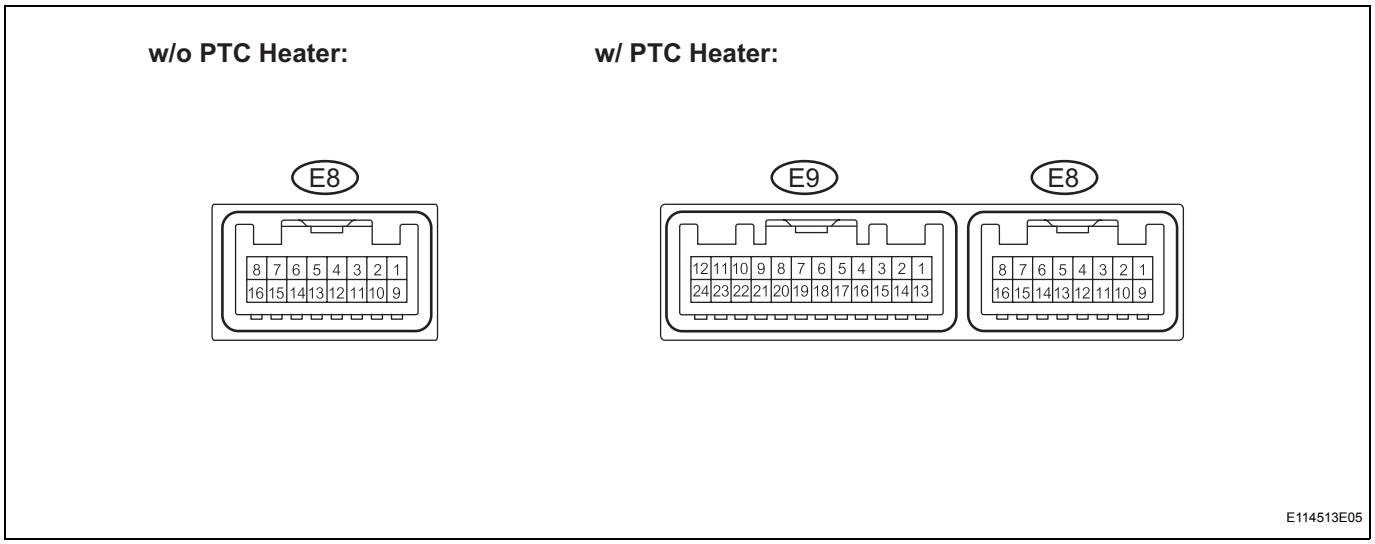

HINT:
Check from the rear of the connector while it is connected to the air conditioning amplifier.

Symbols (Terminals No.)	Wiring Color	Terminal Description	Condition	Specified Condition
S5-3 (E8-1) - GND (E8-12)	Y - W-B	Power supply for pressure sensor	Ignition switch: ON	4.5 to 5.5 V
TX+ (E8-2) - GND (E8-12)	V - W-B	CAN communication line	Ignition switch: ON	Pulse generation (see waveform 1)
TX- (E8-3) - GND (E8-12)	W - W-B	CAN communication line	Ignition switch: ON	Pulse generation (see waveform 2)
SG-2 (E8-4) - Body ground	L - Body ground	Ground for evaporator temperature sensor	Always	Below 1.0 Ω
TAM (E8-5) - SG-1 (E8-11)	W - B	Ambient temperature sensor signal	Ignition switch: ON Ambient temperature: 25 °C	1.35 to 1.75 V
PRE (E8-6) - SG-1 (E8-11)	GR - B	A/C pressure sensor signal	Refrigerant pressure: normal	0.76 to 4.74 V
PRE (E8-6) - SG-1 (E8-11)	GR - B	A/C pressure sensor signal	Refrigerant pressure: abnormal (less than 0.196 MPa [2.0 kgf/cm^2] or more than 3.14 MPa [32 kgf/cm^2])	Below 0.76 V or 4.74 V or more
SOL+ (E8-7) - GND (E8-12)	LG - W-B	A/C compressor operation signal	Engine idling Blower switch: 1 A/C switch: ON	Pulse generation (see waveform 3)
IG+ (E8-8) - GND (E8-12)	Y - W-B	Power source (IG)	Ignition switch: ON	11 to 14 V
SBLW (E8-9) - GND (E8-12)	BR - W-B	Blower motor ON signal	Ignition switch: ON Blower switch: 0 → 1	11 to 14 V → 0 V
TE (E8-10) - SG-2 (E8-4)	GR - L	Evaporator temperature sensor signal	Ignition switch: ON Temperature near evaporator: 15°C (59°F)	1.0 to 1.3 V
SG-1 (E8-11) - Body ground	B - Body ground	Ground for ambient temperature sensor	Always	Below 1.0 Ω
GND (E8-12) - Body ground	W-B - Body ground	Ground for main power supply	Always	Below 1.0 Ω

Symbols (Terminals No.)	Wiring Color	Terminal Description	Condition	Specified Condition
A/C (E8-15) - GND (E8-12)	LG - W-B	A/C switch signal	Ignition switch: ON	Below 1 V → 11 to 14 V
			Defroster: OFF	
			A/C switch: OFF → ON	
		Defroster mode detection switch signal	Ignition switch: ON	Below 1 V → 11 to 14 V
			A/C switch: OFF	
			Defroster: OFF → ON	
LED (E8-16) - Body ground	P - Body ground	A/C switch indicator signal	Engine idling	11 to 14 V → Below 4 V
			A/C switch: ON	
			Blower switch: 0 → 1	
PTC1* (E9-9) - GND (E8-12)	V - W-B	PTC heater relay operation signal	Engine idling	Below 1 V → 11 to 14 V
			No. 3 heater control knob: Max Hot	
			Engine coolant temperature: Below 65°C (149°F)	
			Ambient temperature: Below 10°C (50°F)	
			Blower switch: 0 → 1	
			Waiting time: 10 seconds	
PTC2* (E9-10) - GND (E8-12)	BR - W-B	PTC heater relay operation signal	Engine idling	Below 1 V → 11 to 14 V
			No. 3 heater control knob: Max Hot	
			Engine coolant temperature: Below 65°C (149°F)	
			Ambient temperature: Below 10°C (50°F)	
			Blower switch: 0 → 1	
			Waiting time: 20 seconds	
PTC3* (E9-12) - GND (E8-12)	R - W-B	PTC heater relay operation signal	Engine idling	Below 1 V → 11 to 14 V
			No. 3 heater control knob: Max Hot	
			Engine coolant temperature: Below 65°C (149°F)	
			Ambient temperature: Below 10°C (50°F)	
			Blower switch: 0 → 1	
			Waiting time: 30 seconds	
HEAT* (E9-14) - Body ground	LG - Body ground	MAX HOT switch detection signal	Ignition switch: ON	11 to 14 V
			No. 3 heater control knob: Max Hot	
HLS* (E9-23) - Body ground	LG - Body ground	Headlight control signal	Engine idling	11 to 14 V → Below 1 V
			Light control switch: OFF → HEAD	
ALT* (E9-24) - GND (E8-12)	P - W-B	Alternator operation signal	Engine idling	Pulse generation

*: w/ PTC heater

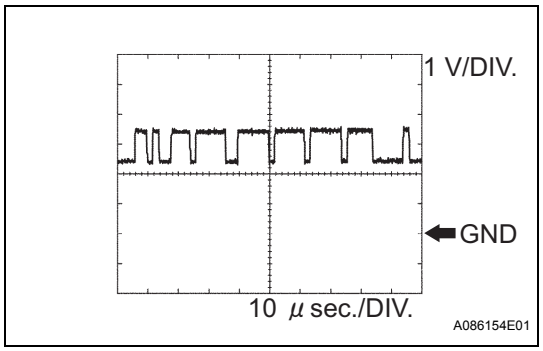

(a) Waveform 1 (Reference) : Using an oscilloscope
CAN communication signal

Terminal Name	Between TX+ (E8-2) - GND (E8-12)
Tester Range	1 V / DIV., 10 μsec. / DIV.
Condition	Ignition switch ON

HINT:
The waveform varies depending on the CAN communication signal.

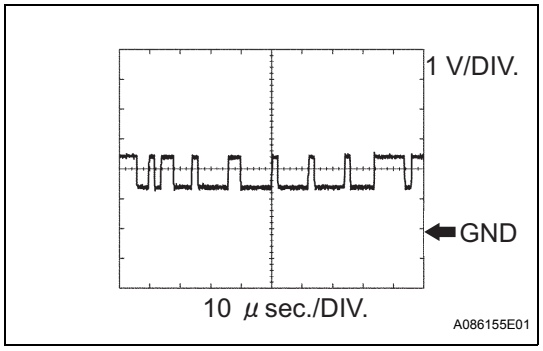

(b) Waveform 2 (Reference) : Using an oscilloscope
CAN communication signal

Terminal Name	Between TX- (E8-3) - GND (E8-12)
Tester Range	1 V / DIV., 10 μsec. / DIV.
Condition	Ignition switch ON

HINT:
The waveform varies depending on the CAN communication signal.

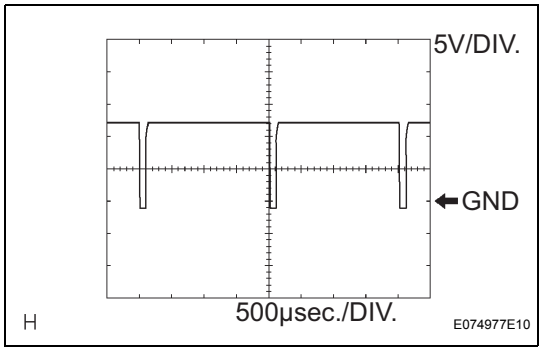

(c) Waveform 3 (Reference) : Using an oscilloscope
Compressor and pulley operation signal

Terminal Name	Between SOL+ (E8-7) - GND (E8-12)
Tester Range	5 V / DIV., 500 μsec. / DIV.
Condition	Engine idling, Blower switch 1, A/C switch ON

DIAGNOSIS SYSTEM

1. DESCRIPTION

(a) Air conditioning system data and the Diagnostic Trouble Codes (DTCs) can be read through the Data Link Connector 3 (DLC3) of the vehicle. When the system seems to be malfunctioning, use an intelligent tester with CAN VIM connected, to check for malfunctions and perform troubleshooting.

2. CHECK DLC3

(a) The ECU uses ISO 15765-4 for communication. The terminal arrangement of the DLC3 complies with SAE J1962 and matches the ISO 15765-4 format.

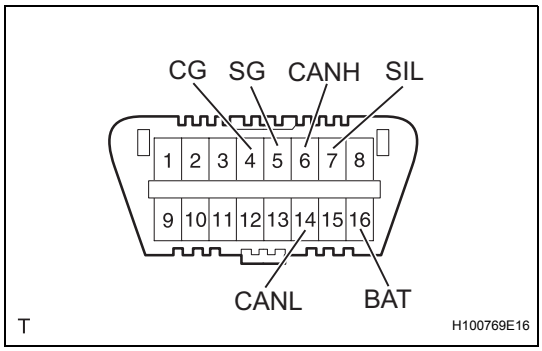

Symbols (Terminal No.)	Terminal Description	Condition	Specified Condition
SIL (7) - SG (5)	Bus " +" line	During transmission	Pulse generation
CG (4) - Body ground	Chassis ground	Always	Below 1 Ω
SG (5) - Body ground	Signal ground	Always	Below 1 Ω
BAT (16) - Body ground	Battery positive	Always	11 to 14 V
CANH (6) - CANL (14)	CAN bus line	Ignition switch OFF*	54 to 69 Ω
CANH (6) - CG (4)	HIGH-level CAN bus line	Ignition switch OFF*	200 Ω or higher
CANL (14) - CG (4)	LOW-level CAN bus line	Ignition switch OFF*	200 Ω or higher
CANH (6) - BAT (16)	HIGH-level CAN bus line	Ignition switch OFF*	6 kΩ or higher
CANL (14) - BAT (16)	LOW-level CAN bus line	Ignition switch OFF*	6 kΩ or higher

NOTICE:

***: Before measuring the resistance, leave the vehicle as is for at least 1 minute and do not operate the ignition switch, any other switches or the doors.**

If the result is not as specified, the DLC3 may have a malfunction. Repair or replace the harness and connector.

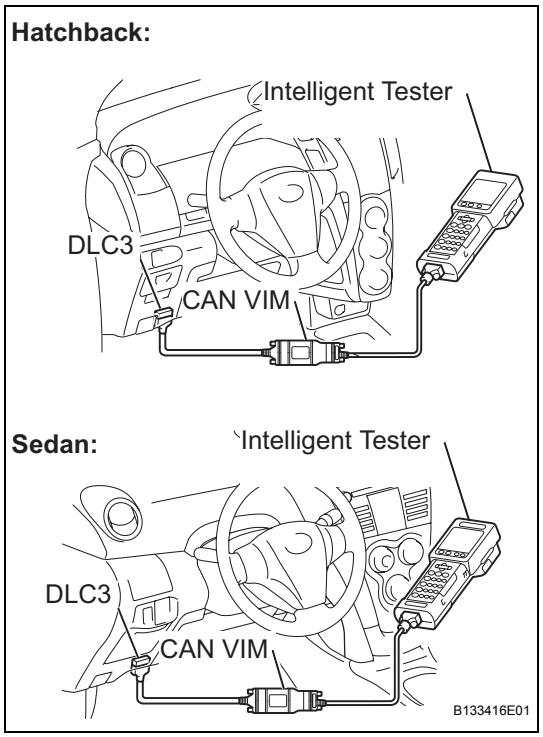

HINT:
Connect the cable of the intelligent tester to the CAN VIM, connect the CAN VIM to the DLC3, turn the ignition switch ON and attempt to use the tester. If the display indicates that a communication error has occurred, there is a problem either with the vehicle or with the tester.

- If communication is normal when the tester is connected to another vehicle, inspect the DLC3 of the original vehicle.
- If communication is still not possible when the tester is connected to another vehicle, the problem is probably in the tester itself. Consult the Service Department listed in the tester's instruction manual.

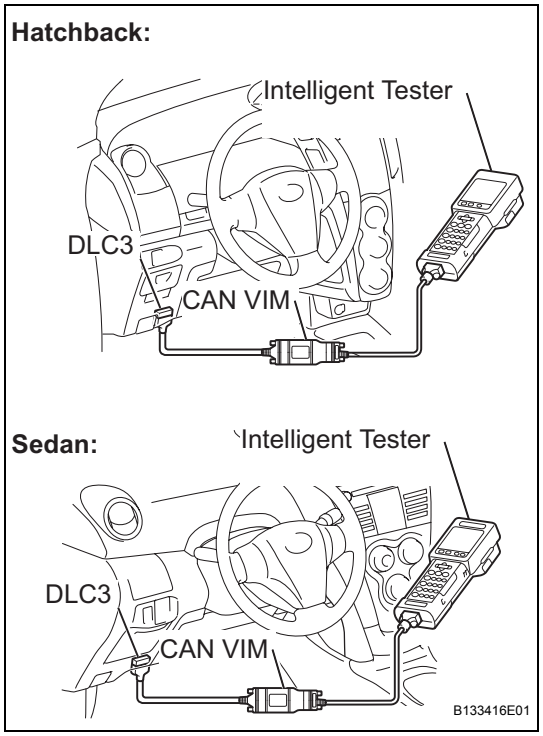

DTC CHECK / CLEAR

1. CHECK DTC

(a) Connect the intelligent tester with the CAN VIM to the DLC3.

(b) Turn the ignition switch ON and turn the intelligent tester ON.

(c) Read the DTC by following the prompts on the tester screen.
HINT:
Refer to the intelligent tester operator's manual for further details.

2. CLEAR DTC

(a) Connect the intelligent tester with the CAN VIM to the DLC3.

(b) Turn the ignition switch ON and turn the intelligent tester ON.

(c) Clear the DTC by following the prompts on the tester screen.
HINT:
Refer to the intelligent tester operator's manual for further details.

DATA LIST / ACTIVE TEST

1. READ DATA LIST

HINT:
Using the intelligent tester's DATA LIST allows switch, sensor, actuator and other item values to be read without removing any parts. Reading the DATA LIST early in troubleshooting is one way to save time.

(a) Connect the intelligent tester to the DLC3.
(b) Turn the ignition switch ON and turn the intelligent tester ON.
(c) Read the DATA LIST by following the prompts on the tester screen.

DATA LIST

Item	Measurement Item / Display (Range)	Normal Condition	Diagnostic Note
AMBI TEMP SENS	Ambient temperature sensor / Min.: -23.3°C (-9.94°F) Max.: 65.95°C (150.71°F)	Actual ambient temperature is displayed	-
COOLANT TEMP	Engine coolant temperature / Min.: 1.3°C (34.34°F) Max.: 90.55°C (194.99°F)	Actual engine coolant temperature is displayed after engine warmed up	-
AMBI TEMP	Adjusted ambient temperature Min.: -30.8°C (-23.44°F) Max.: 50.8°C (123.44°F)	-	-
EVAP FIN TEMP	Evaporator fin thermistor / Min.: -29.7°C (-21.46°F) Max.: 59.55°C (139.19°F)	Actual evaporator temperature is displayed	-
REG PRESS SENS	Regulator pressure sensor / Min.: 0 kgf / cm2G Max.: 38.25 kgf / cm2G	Actual regulator pressure is displayed	-
REG CTRL CURRNT	Regulator control current / Min.: 0 A Max.: 0.997 A	-	-
#CODES	Number of trouble codes / Min.: 0, Max.: 100	Number of DTCs displayed	-

2. PERFORM ACTIVE TEST

HINT:
Performing the intelligent tester's ACTIVE TEST allows relays, the VSV, actuators and other items to be operated without removing any parts. Performing the ACTIVE TEST early in troubleshooting is one way to save time. The Data List can be displayed in the Active Test.

(a) Connect the intelligent tester to the DLC3.
(b) Turn the ignition switch ON and turn the intelligent tester ON.
(c) Perform the ACTIVE TEST according to the display on the tester.

ACTIVE TEST

Item	Test Details / Display (Range)	Diagnostic Note
HEATER LEVEL	Heater Active Level / Min.: 0, Max.: 3	-
A/C MAG CLUTCH	Magnetic clutch relay / OFF, ON	-

DIAGNOSTIC TROUBLE CODE CHART

- If a trouble code is displayed during the DTC check, inspect the suspected areas listed for that code. For details of the code, refer to the "See page" in the DTC chart.
- Inspect the fuse and relay before investigating the suspected areas shown in the table below.

HINT:
When the air conditioning system functions properly, DTC B1400/00 is output.

Air conditioning system

DTC No.	Detection Item	Trouble Area	Memory	See page
B1412/12	Ambient Temperature Sensor Circuit	- Ambient temperature sensor - Harness and connector between ambient temperature sensor and air conditioning amplifier - Air conditioning amplifier	-	AC-23
B1413/13	Evaporator Temperature Sensor Circuit	- No .1 cooler thermistor (evaporator temperature sensor) - Harness and connector between No .1 cooler thermistor (evaporator temperature sensor) and air conditioning amplifier - Air conditioning amplifier	-	AC-27
B1423/23	Pressure Sensor Circuit	- Air conditioning pressure sensor - Harness and connector between air conditioning pressure sensor and air conditioning amplifier - Air conditioning amplifier	-	AC-31
B1451/51	Compressor Solenoid Circuit	- Compressor and pulley - Harness and connector between air conditioning amplifier and compressor and pulley - Air conditioning amplifier	-	AC-37
B1499/99	Multiplex Communication Circuit	- Air conditioning amplifier power source circuit - Air conditioning amplifier - ECM - Combination meter assembly - CAN communication line	-	AC-41

DTC	B1412/12	Ambient Temperature Sensor Circuit

DESCRIPTION

The ambient temperature sensor is installed in the front part of the condenser to detect the ambient temperature and control the air conditioner. The sensor is connected to the air conditioning amplifier and detects fluctuations in the ambient temperature. This data is used for controlling the room temperature. The sensor sends a signal to the air conditioning amplifier. The resistance of the ambient temperature sensor changes in accordance with the ambient temperature. As the temperature decreases, the resistance increases. As the temperature increases, the resistance decreases. The air conditioning amplifier applies a voltage (5 V) to the ambient temperature sensor and reads voltage changes as changes in the resistance of the ambient temperature sensor.

DTC No.	DTC Detection Condition	Trouble Area
B1412/12	Open or short in ambient temperature sensor circuit	• Ambient temperature sensor • Harness and connector between ambient temperature sensor and air conditioning amplifier • Air conditioning amplifier

WIRING DIAGRAM

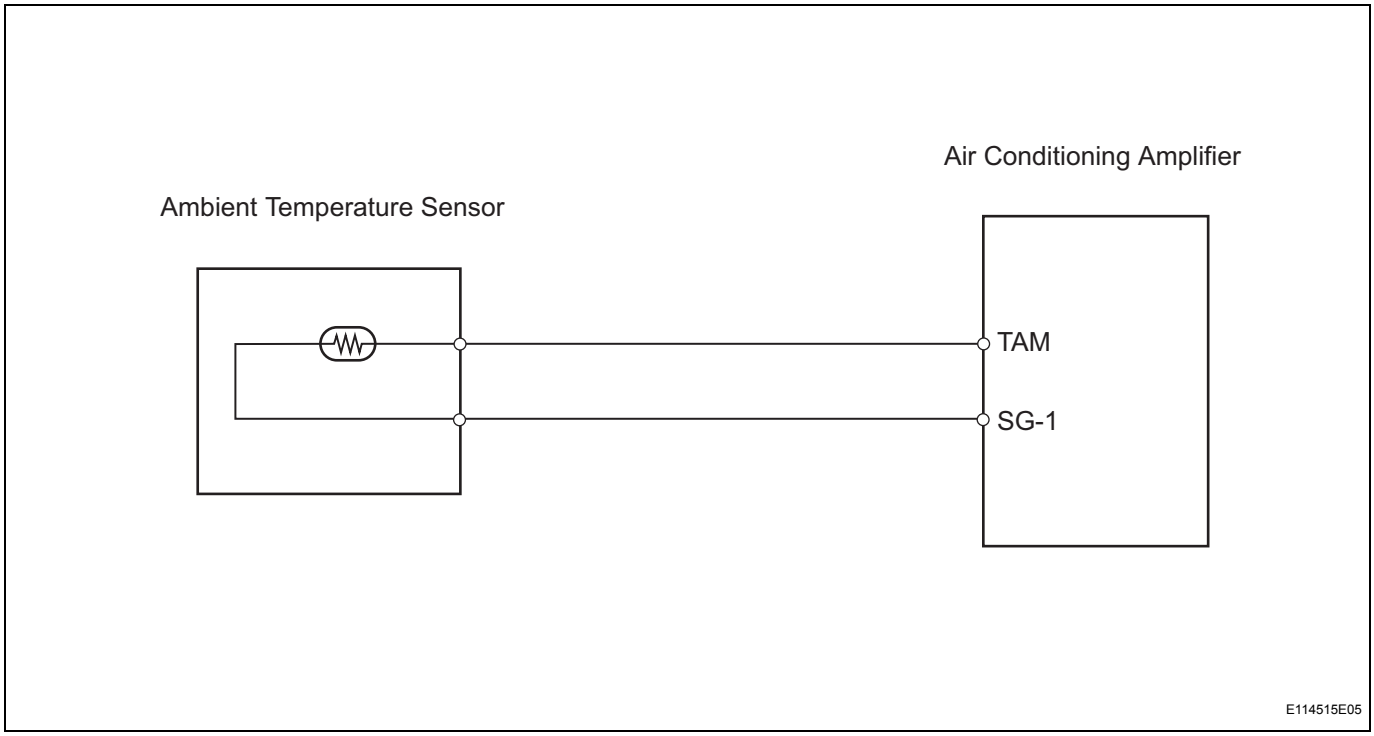

INSPECTION PROCEDURE

1	READ VALUE USING INTELLIGENT TESTER (AMBI TEMP SENS)

(a) Connect the intelligent tester with CAN VIM to the DLC3.
(b) Turn the ignition switch ON and turn the intelligent tester main switch ON.
(c) Select the item below in the DATA LIST, and read the value displayed on the intelligent tester.

DATA LIST / AIR CONDITIONER

Item	Measurement Item / Display (Range)	Normal Condition	Diagnostic Note
AMBI TEMP SENS	Ambient temperature sensor / Min.: -23.3°C (-9.94°F) Max.: 65.95°C (150.71°F)	Actual ambient temperature is displayed	Open circuit: -23.3°C (-9.94°F) Short circuit: 65.95°C (150.71°F)

OK:
The display is as specified in the normal condition column.

Result

Result	Proceed to
NG	A
OK (Checking from the PROBLEM SYMPTOMS TABLE)	B
OK (Checking from the DTC)	C

B → **PROCEED TO NEXT CIRCUIT INSPECTION SHOWN IN PROBLEM SYMPTOMS TABLE**

C → **REPLACE AIR CONDITIONING AMPLIFIER**

A

2 INSPECT AMBIENT TEMPERATURE SENSOR

Component Side:

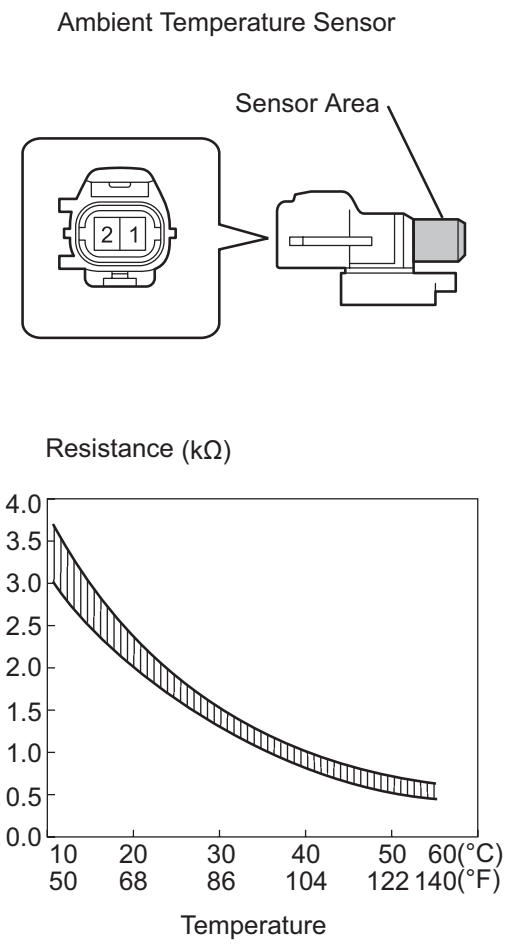

(a) Remove the ambient temperature sensor.
(b) Measure the resistance.
Standard resistance

Tester Connection	Condition	Specified Condition
1 - 2	10°C (50°F)	3.00 to 3.73 kΩ
1 - 2	15°C (59°F)	2.45 to 2.88 kΩ
1 - 2	20°C (68°F)	1.95 to 2.30 kΩ
1 - 2	25°C (77°F)	1.60 to 1.80 kΩ
1 - 2	30°C (86°F)	1.28 to 1.47 kΩ
1 - 2	35°C (95°F)	1.00 to 1.22 kΩ
1 - 2	40°C (104°F)	0.80 to 1.00 kΩ
1 - 2	45°C (113°F)	0.65 to 0.85 kΩ
1 - 2	50°C (122°F)	0.50 to 0.70 kΩ
1 - 2	55°C (131°F)	0.44 to 0.60 kΩ
1 - 2	60°C (140°F)	0.36 to 0.50 kΩ

NOTICE:
- **Touching the sensor even slightly may change the resistance value. Be sure to hold the connector of the sensor.**
- **When measuring, the sensor temperature must be the same as the ambient temperature.**

HINT:
As the temperature increases, the resistance decreases (see the graph on the left).
(c) Reinstall the ambient temperature sensor.

NG → **REPLACE AMBIENT TEMPERATURE SENSOR**

OK

3	**CHECK HARNESS AND CONNECTOR (AMBIENT TEMPERATURE SENSOR - AIR CONDITIONING AMPLIFIER)**

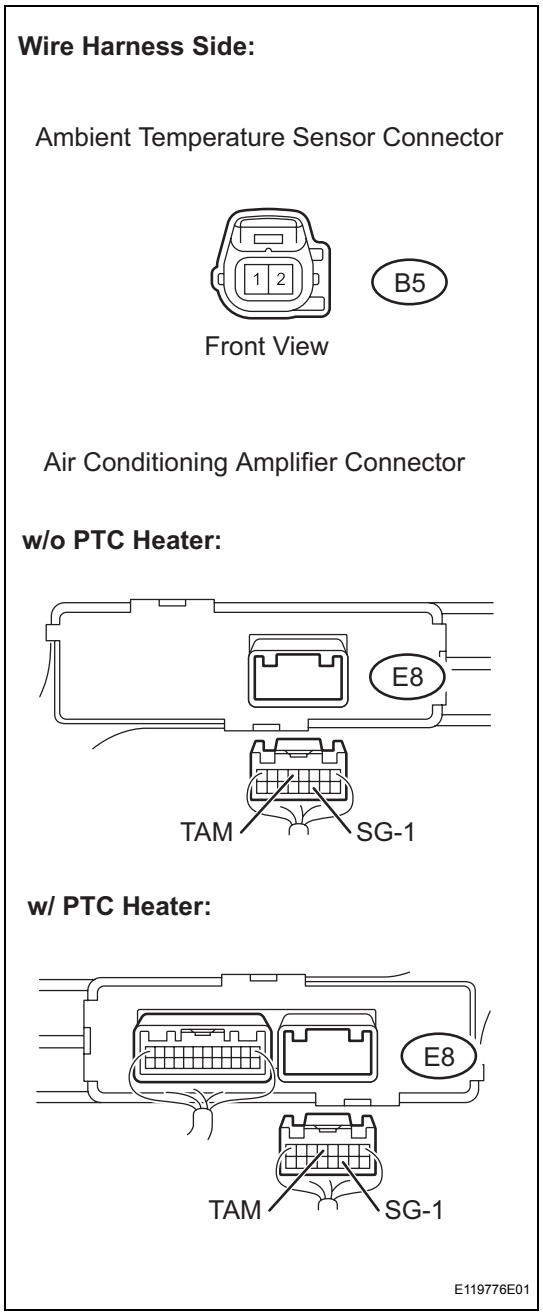

(a) Disconnect the B5 ambient temperature sensor connector.
(b) Disconnect the E8 air conditioning amplifier connector.
(c) Measure the resistance.
Standard resistance

Tester Connection	Specified Condition
B5-1 - E8-11 (SG-1)	Below 1 Ω
B5-2 - E8-5 (TAM)	Below 1 Ω
B5-1 - Body ground	10 kΩ or higher
B5-2 - Body ground	10 kΩ or higher

(d) Reconnect the ambient temperature sensor connector.
(e) Reconnect the air conditioning amplifier connector.

NG → **REPAIR OR REPLACE HARNESS OR CONNECTOR**

OK

REPLACE AIR CONDITIONING AMPLIFIER

DTC	B1413/13	Evaporator Temperature Sensor Circuit

DESCRIPTION

The No. 1 cooler thermistor (evaporator temperature sensor) is installed on the evaporator in the air conditioner unit to detect the temperature of the cooled air that has passed through the evaporator and to control the air conditioner. It sends signals to the air conditioning amplifier, which change in accordance with the resistance of the No. 1 cooler thermistor (evaporator temperature sensor). As the temperature decreases, the resistance increases. As the temperature increases, the resistance decreases. The air conditioning amplifier applies a voltage (5V) to the No. 1 cooler thermistor (evaporator temperature sensor) and reads voltage changes as changes in the resistance of the evaporator temperature sensor. This sensor is used for frost prevention.

DTC No.	DTC Detection Condition	Trouble Area
B1413/13	Open or short in evaporator temperature sensor circuit	• No. 1 cooler thermistor (evaporator temperature sensor) • Harness and connector between No. 1 cooler thermistor (evaporator temperature sensor) and air conditioning amplifier • Air conditioning amplifier

WIRING DIAGRAM

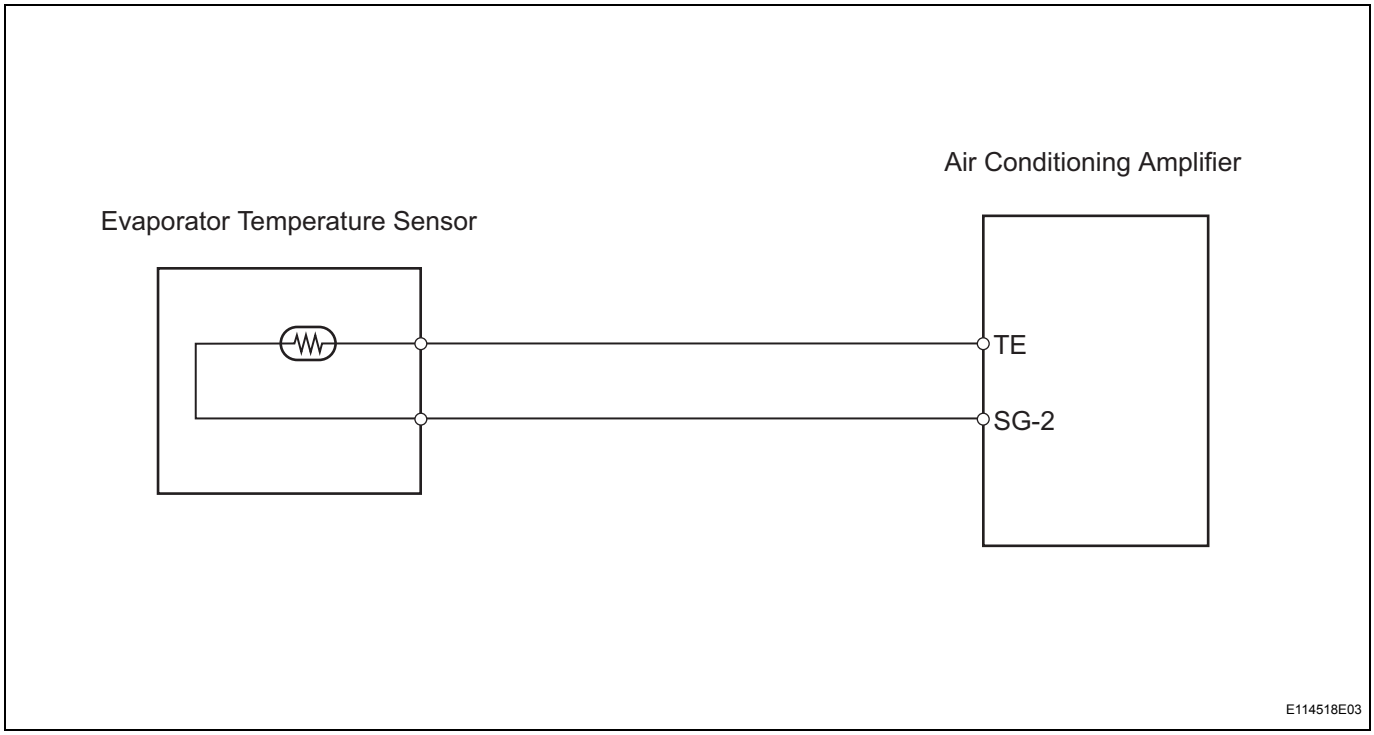

INSPECTION PROCEDURE

1	READ VALUE USING INTELLIGENT TESTER (EVAP FIN TEMP)

(a) Connect the intelligent tester with CAN VIM to the DLC3.
(b) Turn the ignition switch ON and turn the intelligent tester main switch ON.
(c) Select the item below in the DATA LIST, and read the value displayed on the intelligent tester.

DATA LIST / AIR CONDITIONER

Item	Measurement Item / Display (Range)	Normal Condition	Diagnostic Note
EVAP FIN TEMP (Evaporator fin thermistor)	Evaporator fin thermistor / Min.: -29.7°C (-21.46°F) Max.: 59.55°C (139.019°F)	Actual evaporator temperature is displayed	Open circuit: -29.7°C (-21.46°F) Short circuit: 59.55°C (139.019°F)

OK:
The display is as specified in the normal condition column.

Result

Result	Proceed to
NG	A
OK (Checking from the PROBLEM SYMPTOMS TABLE)	B
OK (Checking from the DTC)	C

B → **PROCEED TO NEXT CIRCUIT INSPECTION SHOWN IN PROBLEM SYMPTOMS TABLE**

C → **REPLACE AIR CONDITIONING AMPLIFIER**

A

2	INSPECT NO. 1 COOLER THERMISTOR (EVAPORATOR TEMPERATURE SENSOR)

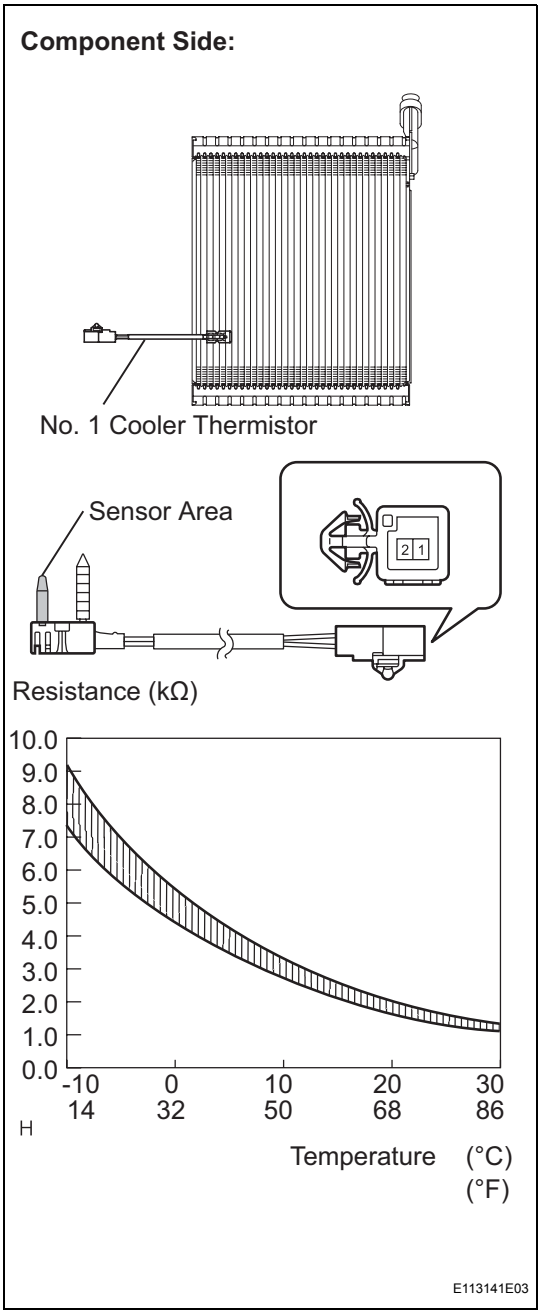

(a) Remove the evaporator temperature sensor.
(b) Measure the resistance.
Standard resistance

Tester Connection	Condition	Specified Condition
1 - 2	-10°C (14°F)	7.30 to 9.10 kΩ
1 - 2	-5°C (23°F)	5.65 to 6.95 kΩ
1 - 2	0°C (32°F)	4.40 to 5.35 kΩ
1 - 2	5°C (41°F)	3.40 to 4.15 kΩ
1 - 2	10°C (50°F)	2.70 to 3.25 kΩ
1 - 2	15°C (59°F)	2.14 to 2.58 kΩ
1 - 2	20°C (68°F)	1.71 to 2.05 kΩ
1 - 2	25°C (77°F)	1.38 to 1.64 kΩ
1 - 2	30°C (86°F)	1.11 to 1.32 kΩ

NOTICE:
- **Touching the sensor even slightly may change the resistance value. Be sure to hold the connector of the sensor.**
- **When measuring, the sensor temperature must be the same as the ambient temperature.**

HINT:
As the temperature increases, the resistance decreases (see the graph on the left).

(c) Reinstall the evaporator temperature sensor.

NG → **REPLACE NO. 1 COOLER THERMISTOR (EVAPORATOR TEMPERATURE SENSOR)**

OK

3	**CHECK HARNESS AND CONNECTOR (No. 1 COOLER THERMISTOR - AIR CONDITIONING AMPLIFIER)**

Wire Harness Side:

No. 1 Cooler Thermistor Connector

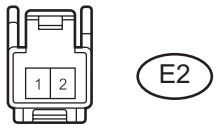

Front View

Air Conditioning Amplifier Connector

w/o PTC Heater:

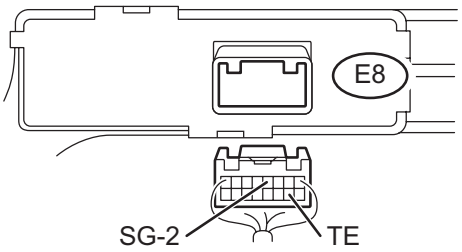

w/ PTC Heater:

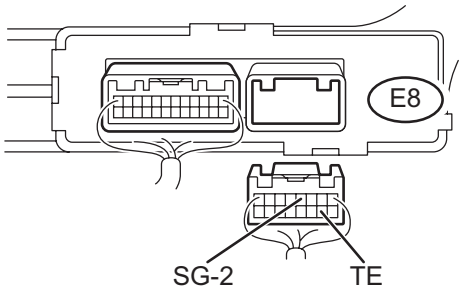

E119777E02

(a) Disconnect the E2 No. 1 cooler thermistor (evaporator temperature sensor) connector.
(b) Disconnect the E8 air conditioning amplifier connector.
(c) Measure the resistance.
Standard resistance

Tester Connection	Specified Condition
E2-2 - E8-10 (TE)	Below 1 Ω
E2-1 - E8-4 (SG-2)	Below 1 Ω
E2-2 - Body ground	10 kΩ or higher
E2-1 - Body ground	10 kΩ or higher

(d) Reconnect the No. 1 cooler thermistor connector.
(e) Reconnect the air conditioning amplifier connector.

NG → **REPAIR OR REPLACE HARNESS OR CONNECTOR**

OK

REPLACE AIR CONDITIONING AMPLIFIER

DTC	B1423/23	Pressure Sensor Circuit

DESCRIPTION

This DTC is output when the refrigerant pressure is either extremely low (0.19 Mpa [2.0 kgf/cm^2, 28 psi] or less) or extremely high (3.14 Mpa [32.0 kgf/cm^2, 455 psi] or more). The pressure sensor, which is installed on the pipe of the high pressure side, detects the refrigerant pressure and sends a refrigerant pressure signal to the air conditioning amplifier. The air conditioning amplifier determines the pressure from the signals in accordance with the sensor characteristics, and controls the compressor.

DTC No.	DTC Detection Condition	Trouble Area
B1423/23	Open or short in pressure sensor circuit	• Air conditioning pressure sensor • Harness and connector between air conditioning pressure sensor and air conditioning amplifier • Air conditioning amplifier

WIRING DIAGRAM

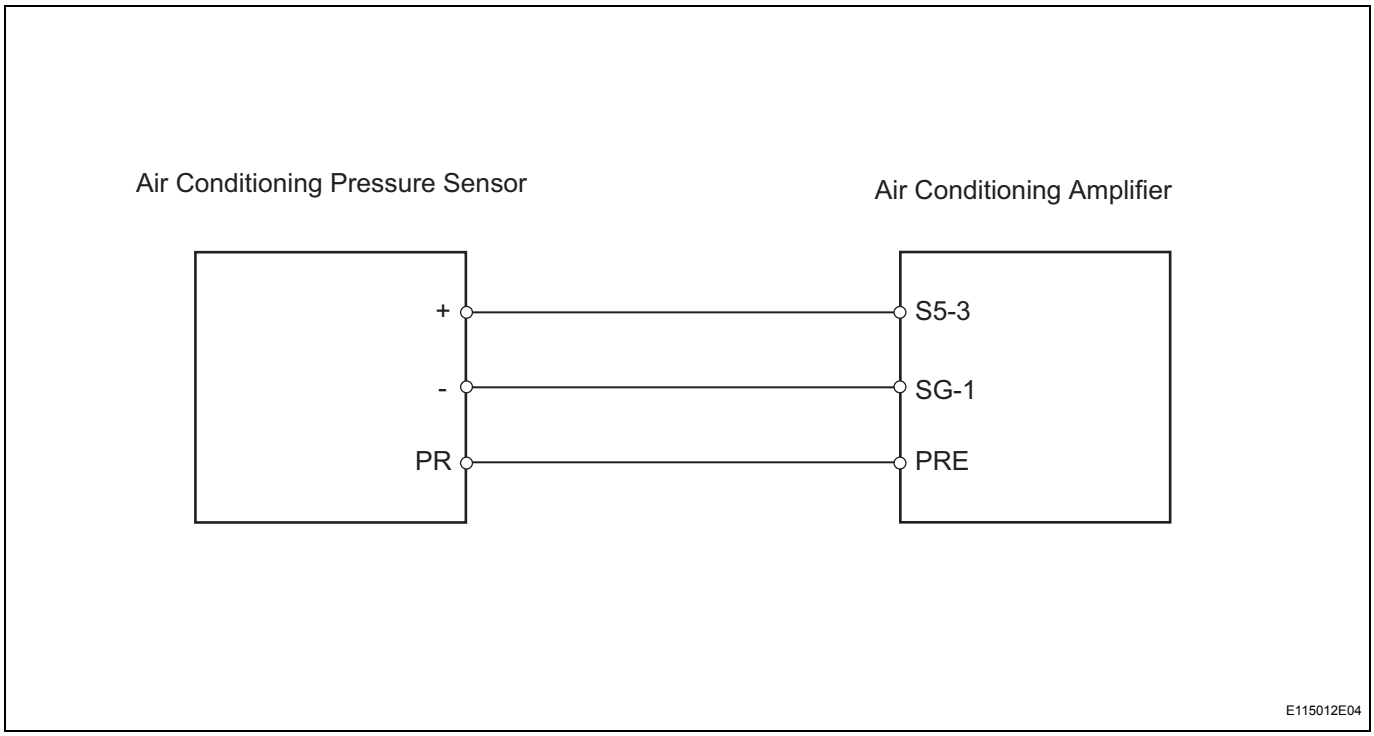

INSPECTION PROCEDURE

1 CHECK REFRIGERANT

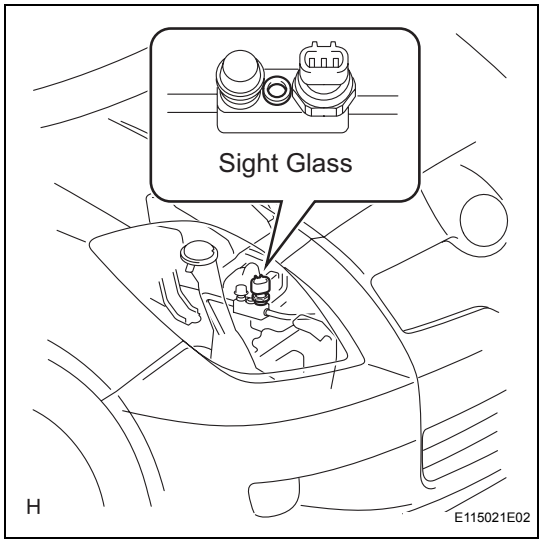

(a) Check the sight glass of the cooler unit refrigerant liquid pipe.
  (1) Prepare the vehicle in accordance with the chart below.

Item	Condition
Vehicle Doors	Fully open
Temperature Setting	MAX COLD
Blower Speed	HI
A/C Switch	ON

  (2) Compare the sight glass to the following chart.

Item	Symptom	Amount of Refrigerant	Corrective Procedures
1	Bubbles visible	Insufficient*	(1) Check for gas leakage and repair if necessary (2) Add refrigerant until bubbles disappear
2	No bubbles visible	Empty, insufficient or too much	Refer to items 3 and 4
3	No temperature difference between compressor inlet and outlet	Empty or nearly empty	(1) Check for gas leakage with gas leak detector and repair if necessary (2) Add refrigerant until bubbles disappear
4	Considerable temperature difference between compressor inlet and outlet	Correct or too much	Refer to items 5 and 6
5	Immediately after A/C turned OFF, refrigerant becomes clear	Too much	(1) Drain or discharge refrigerant (2) Bleed air and supply proper amount of purified refrigerant
6	Immediately after A/C turned OFF, refrigerant foams and then becomes clear	Correct	-

HINT:
*: If the ambient temperature is higher than usual but cooling is sufficient, bubbles in the sight glass are permissible.

NG → **CHARGE REFRIGERANT**

OK

2 READ VALUE OF INTELLIGENT TESTER (REG PRESS SENS)

(a) Connect the intelligent tester to the DLC3.
(b) Turn the ignition switch ON and turn the intelligent tester main switch ON.

(c) Select the item below in the DATA LIST, and read the value displayed on the intelligent tester.

DATA LIST / AIR CONDITIONER

Item	Measure Item / Display (Range)	Normal Condition	Diagnostic Note
REG PRESS SENS (Regulator pressure sensor)	Regulator Pressure Sensor / Min.: 0 kgf / cm 2G, Max.: 38.25 kgf / cm 2G	Actual regulator pressure is displayed	-

OK:
The display is as specified in the normal condition column.

Result

Result	Proceed to
NG	A
OK (Checking from the PROBLEM SYMPTOMS TABLE)	B
OK (Checking from the DTC)	C

B → **PROCEED TO NEXT CIRCUIT INSPECTION SHOWN IN PROBLEM SYMPTOMS TABLE**

C → **REPLACE AIR CONDITIONING AMPLIFIER**

A

3	**CHECK HARNESS AND CONNECTOR (PRESSURE SENSOR - AIR CONDITIONING AMPLIFIER)**

Wire Harness Side:

Air Conditioning Pressure Sensor Connector

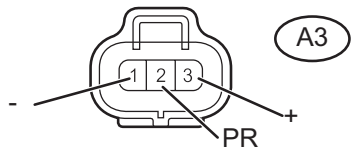

Front View

Air Conditioning Amplifier Connector

w/o PTC Heater:

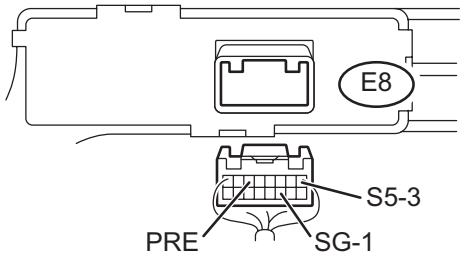

w/ PTC Heater:

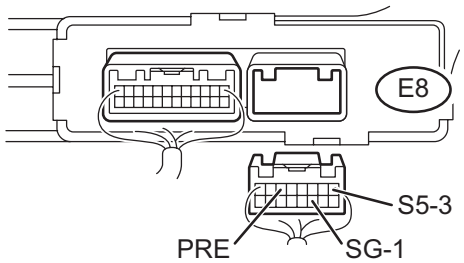

E119778E01

(a) Disconnect the A3 air conditioning pressure sensor connector.
(b) Disconnect the E8 air conditioning amplifier connector.
(c) Measure the resistance.
Standard resistance

Tester Connection	Specified Condition
A3-1 (-) - E8-11 (SG-1)	Below 1 Ω
A3-2 (PR) - E8-6 (PRE)	Below 1 Ω
A3-3 (+) - E8-1 (S5-3)	Below 1 Ω
A3-1 (-) - Body ground	10 kΩ or higher
A3-2 (PR) - Body ground	10 kΩ or higher
A3-3 (+) - Body ground	10 kΩ or higher

(d) Reconnect the air conditioning pressure sensor connector.
(e) Reconnect the air conditioning amplifier connector.

NG → **REPAIR OR REPLACE HARNESS OR CONNECTOR**

OK

4 INSPECT AIR CONDITIONING AMPLIFIER

Wire Harness Side:

Air Conditioning Amplifier Connector

w/o PTC Heater:

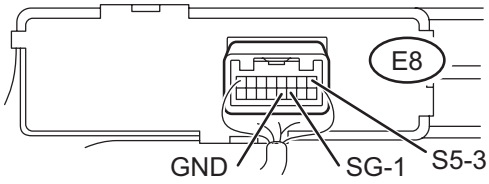

w/ PTC Heater:

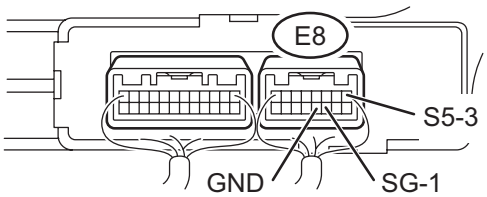

E119779E01

(a) Remove the air conditioning amplifier with its connectors still connected.
(b) Measure the resistance.
Standard resistance

Tester Connection	Specified Condition
E8-11 (SG-1) - E8-12 (GND)	Below 1 Ω

(c) Turn the ignition switch ON.
(d) Measure the voltage.
Standard voltage

Tester Connection	Specified Condition
E8-1 (S5-3) - E8-11 (SG-1)	4.5 to 5.5 V

(e) Reinstall the air conditioning amplifier.

NG → **REPLACE AIR CONDITIONING AMPLIFIER**

OK

5 INSPECT AIR CONDITIONING PRESSURE SENSOR

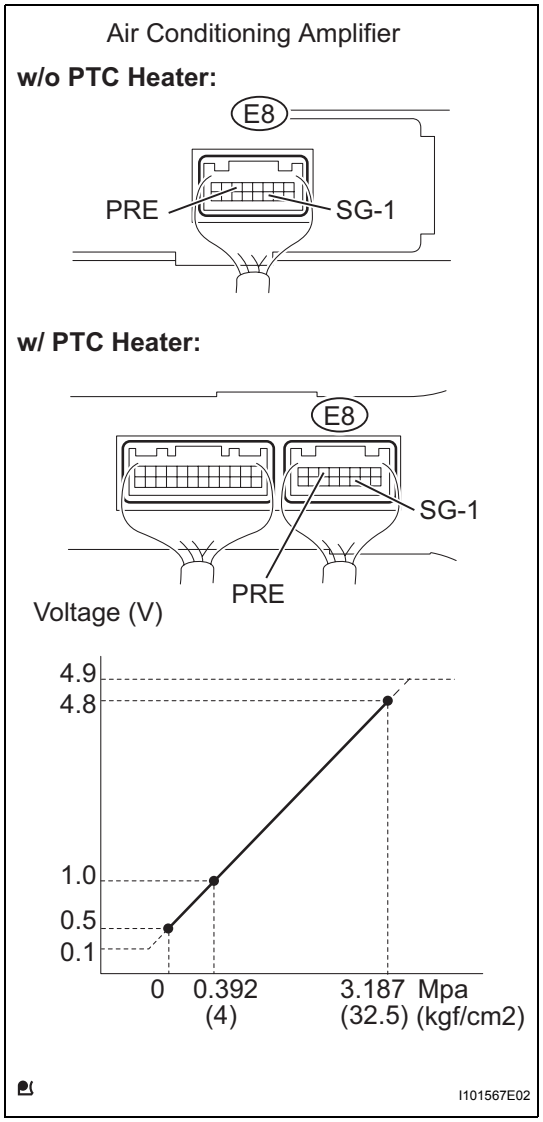

(a) Remove the air conditioning amplifier with its connectors still connected.
(b) Set the manifold gauge.
(c) Warm up the engine.
(d) Turn the A/C switch ON.
(e) Measure the voltage.
Standard voltage

Tester Connection	Refrigerant Pressure	Specified Condition
E8-6 (PRE) - E8-11 (SG-1)	0.196 to 3.14 MPa (2.0 to 32 kgf/cm2)	0.76 to 4.74 V

(f) Reinstall the air conditioning amplifier.

NG → **REPLACE LIQUID TUBE SUB-ASSEMBLY A (AIR CONDITIONING PRESSURE SENSOR)**

OK

REPLACE AIR CONDITIONING AMPLIFIER

DTC	B1451/51	Compressor Solenoid Circuit

DESCRIPTION

In this circuit, the compressor receives a refrigerant compression demand signal from the air conditioning amplifier.
Based on this signal, the compressor changes the degree of refrigerant compression.

DTC No.	DTC Detection Condition	Trouble Area
B1451/51	Open or short in solenoid of externally changeable compressor circuit	• Compressor and pulley • Harness and connector between air conditioning amplifier and compressor and pulley • Air conditioning amplifier

WIRING DIAGRAM

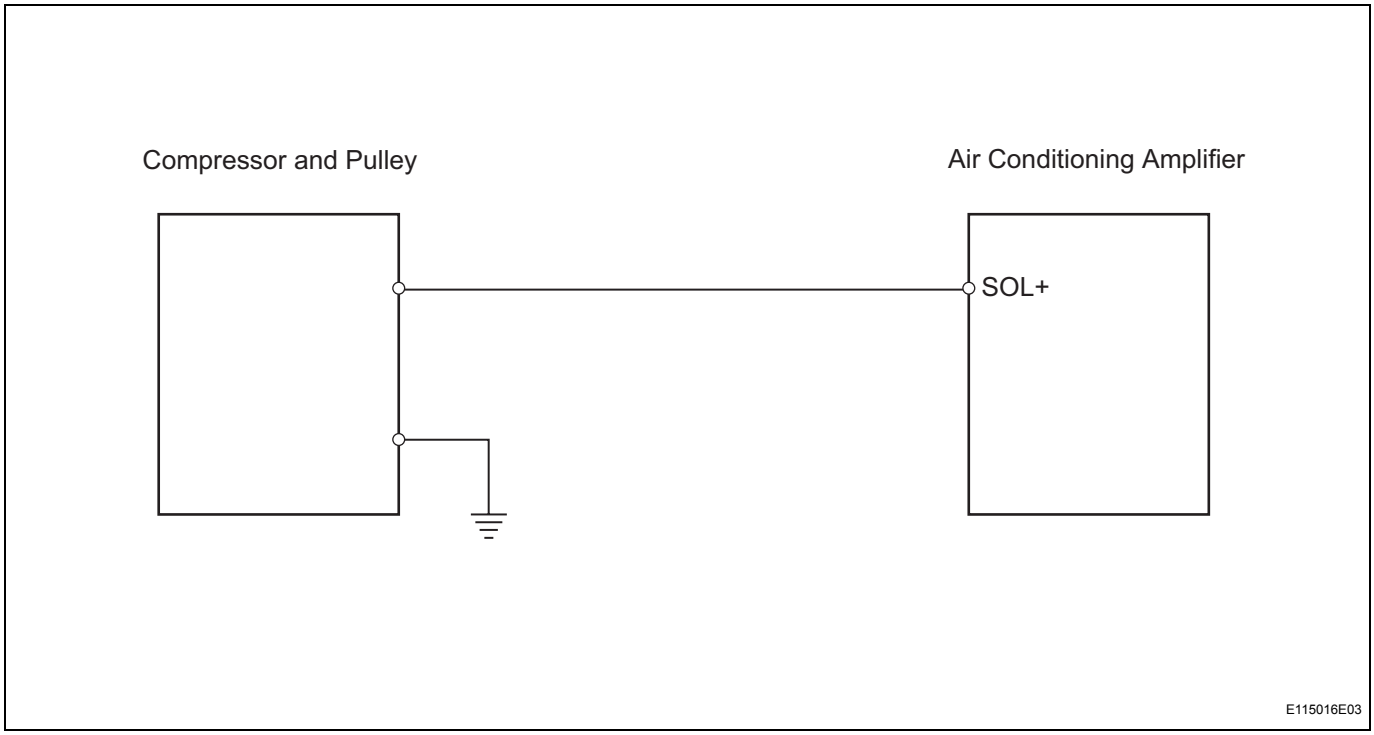

INSPECTION PROCEDURE

1	READ VALUE OF INTELLIGENT TESTER (REG CTRL CURRNT)

(a) Connect the intelligent tester with CAN VIM to the DLC3.
(b) Turn the ignition switch ON and turn the intelligent tester main switch ON.
(c) Select the items below in the DATA LIST, and read the value displayed on the intelligent tester.

DATA LIST / AIR CONDITIONER

ITEM	Measurement Item / Display	Normal Condition	Diagnostic Note
REG CTRL CURRNT (Regulator control current)	Regulator control current / Min.: 0 A Max.: 0.997 A	Value changes between 0 A and 0.997 A in accordance with compressor and pulley operation	-

OK:
The display is as specified in the normal condition column.

Result

Result	Proceed to
NG	A
OK (Checking from the PROBLEM SYMPTOMS TABLE)	B
OK (Checking from the DTC)	C

B → **PROCEED TO NEXT CIRCUIT INSPECTION SHOWN IN PROBLEM SYMPTOMS TABLE**

C → **REPLACE AIR CONDITIONING AMPLIFIER**

A

2 INSPECT COMPRESSOR AND PULLEY

Component Side:

Compressor and Pulley

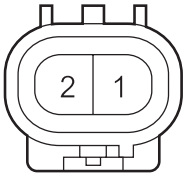

H

E115015E10

(a) Disconnect the C8 compressor and pulley connector.
(b) Measure the resistance.
Standard resistance

Tester Connection	Specified Condition
C8-1 - C8-2	10.1 to 11.1 Ω at 25°C (77°F)

(c) Reconnect the compressor and pulley connector.

NG → **REPLACE COMPRESSOR AND PULLEY**

OK

3	**CHECK HARNESS AND CONNECTOR (COMPRESSOR AND PULLEY - AIR CONDITIONING AMPLIFIER)**

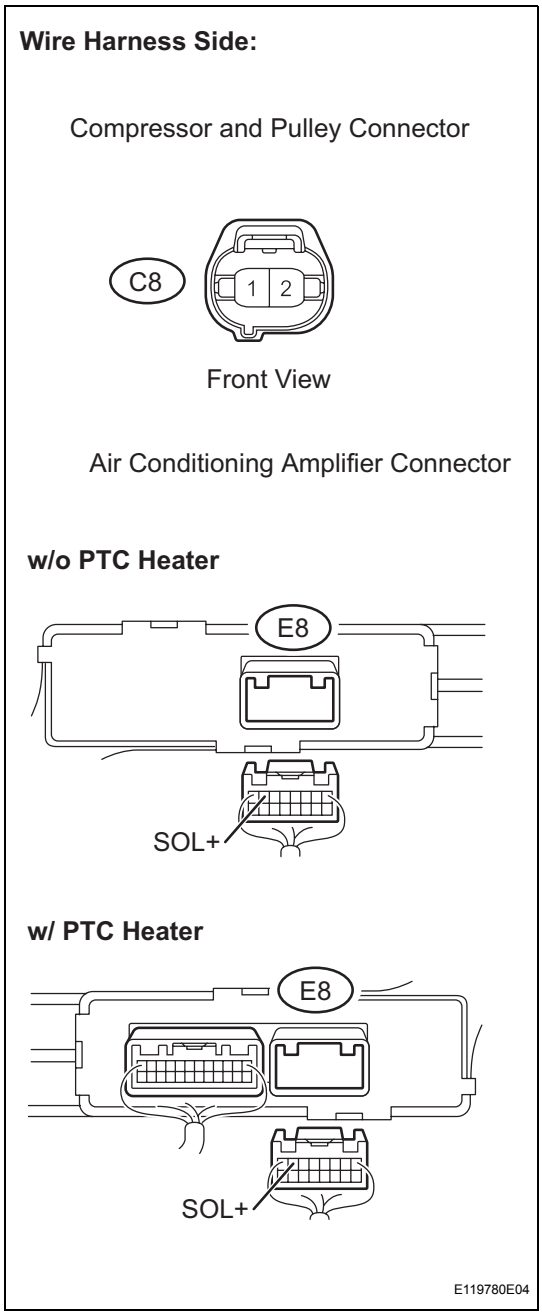

(a) Disconnect the C8 compressor and pulley connector.
(b) Disconnect the E8 air conditioning amplifier connector.
(c) Measure the resistance.
Standard resistance

Tester Connection	Specified Condition
C8-1 - E8-7 (SOL+)	Below 1 Ω
C8-1 - Body ground	10 kΩ or higher

(d) Reconnect the compressor and pulley connector.
(e) Reconnect the air conditioning amplifier connector.

NG → **REPAIR OR REPLACE HARNESS OR CONNECTOR**

OK

4	CHECK HARNESS AND CONNECTOR (COMPRESSOR AND PULLEY - BODY GROUND)

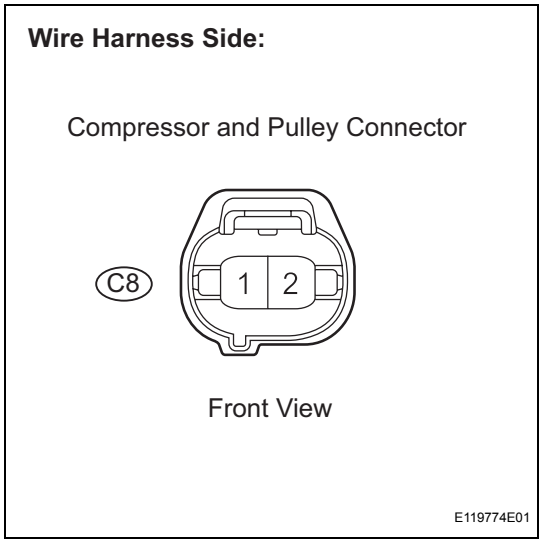

(a) Disconnect the C8 compressor and pulley connector.
(b) Measure the resistance.
Standard resistance

Tester Connection	Specified Condition
C8-2 - Body ground	Below 1 Ω

(c) Reconnect the compressor and pulley connector.

NG → **REPAIR OR REPLACE HARNESS OR CONNECTOR**

OK

REPLACE AIR CONDITIONING AMPLIFIER

DTC	B1499/99	Multiplex Communication Circuit

DESCRIPTION

The air conditioning amplifier communicates data with the ECM and combination meter assembly through the CAN communication system.

DTC No.	DTC Detection Condition	Trouble Area
B1499/99	Open in CAN communication line	• Air conditioning amplifier power source circuit • Air conditioning amplifier • ECM • Combination meter assembly • CAN communication line

WIRING DIAGRAM

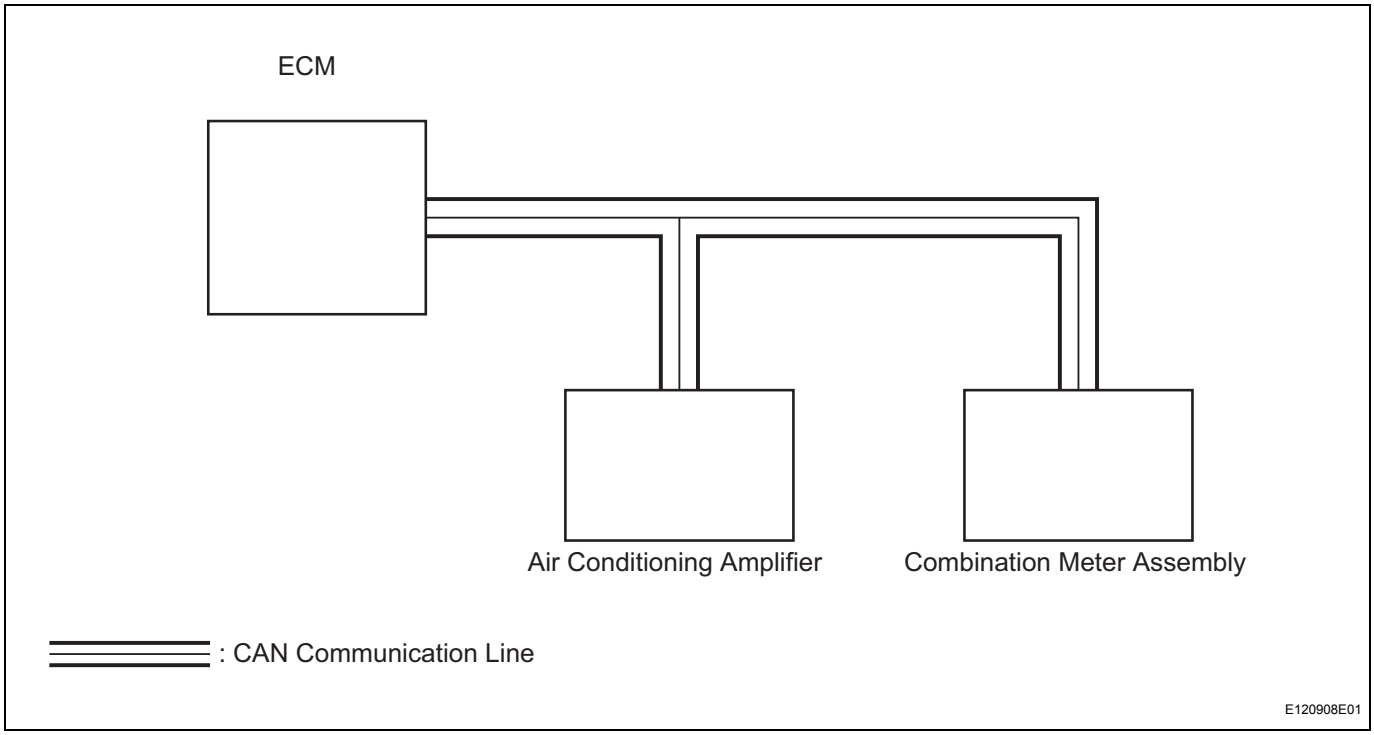

INSPECTION PROCEDURE

1	CHECK DTC OUTPUT (DTC B1499/99)

(a) Clear the DTC.
  (1) Connect an intelligent tester with CAN VIM to the DLC3 with the ignition switch turned OFF.
  (2) Turn the ignition switch ON and turn the intelligent tester main switch ON.
  (3) Clear the DTC by following the prompts on the tester screen.
  HINT:
  Refer to the intelligent tester operator's manual for further details.

(b) Read the DTC.

(1) Connect an intelligent tester with CAN VIM to the DLC3 with the ignition switch turned OFF.
(2) Turn the ignition switch ON and turn the intelligent tester main switch ON.
(3) Read the DTC by following the prompts on the tester screen.
HINT:
Refer to the intelligent tester operator's manual for further details.

Result

Result	Proceed to
DTC (B1499/99) is output	A
DTC (B1499/99) is not output	B

B → **SYSTEM IS OK**

A

GO TO CAN COMMUNICATION SYSTEM

Blower Motor Circuit

DESCRIPTION

When the heater control (blower switch) is set to position 1 or higher, the contact of the HTR relay is closed, current flows to the blower motor, and the blower motor operates. The blower motor speed can be changed by exchanging the ground and the blower resistor circuit with the heater control (blower switch).

WIRING DIAGRAM

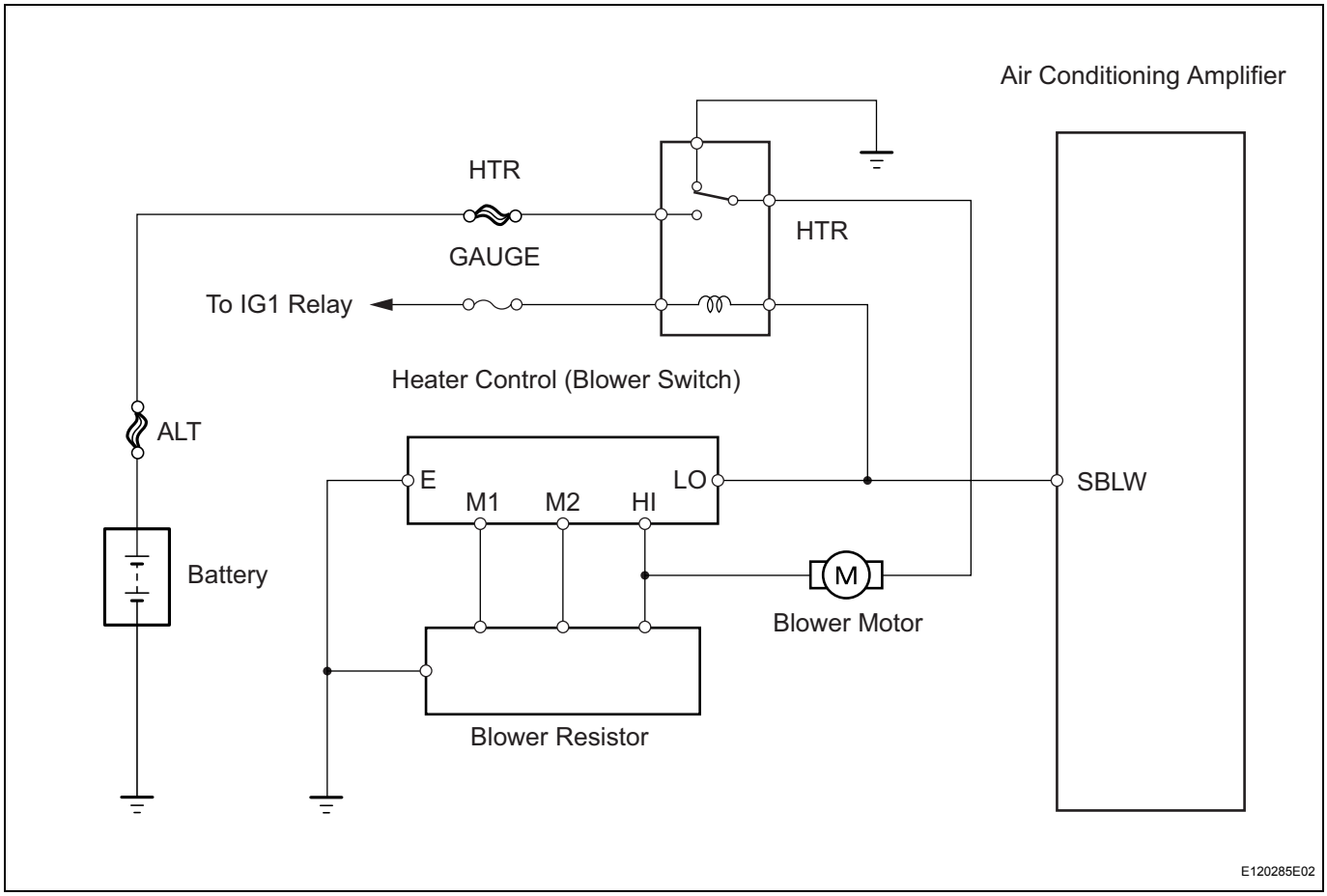

INSPECTION PROCEDURE

1	INSPECT FUSE (GAUGE, HTR)

(a) Remove the GAUGE fuse from the main body ECU.
(b) Remove the HTR fuse from the engine room relay block.
(c) Measure the resistance.
Standard resistance

Tester Item	Specified Condition
GAUGE fuse	Below 1 Ω
HTR fuse	Below 1 Ω

(d) Reinstall the GAUGE fuse.
(e) Reinstall the HTR fuse.

NG	REPLACE FUSE

OK

2 INSPECT HTR RELAY

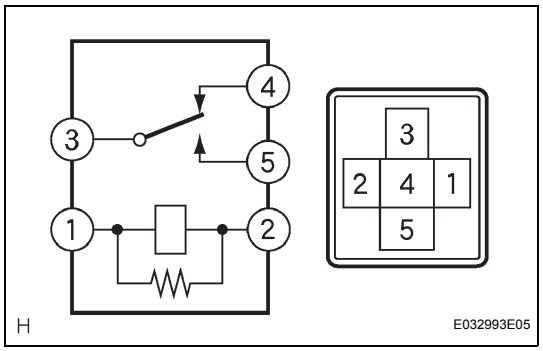

(a) Remove the HTR relay from the main body ECU.
(b) Measure the resistance.
Standard resistance

Tester Connection	Specified Condition
3 - 4	Below 1 Ω
3 - 5	10 kΩ or higher
3 - 4	10 kΩ or higher (when battery voltage is applied to terminals 1 and 2)
3 - 5	Below 1 Ω (when battery voltage is applied to terminals 1 and 2)

(c) Reinstall the HTR relay.

NG → **REPLACE HTR RELAY**

OK

3 INSPECT BLOWER MOTOR

Component Side:

Blower Motor

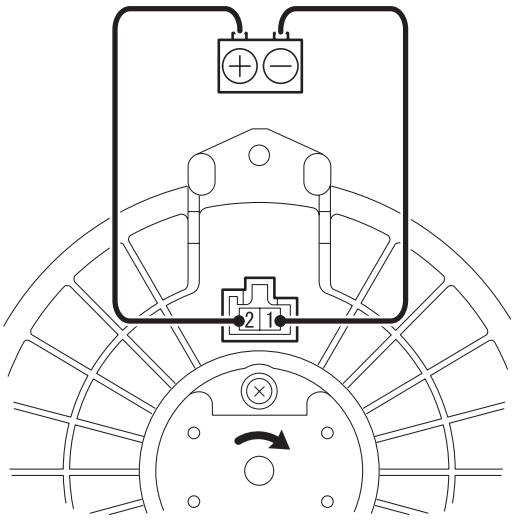

(a) Disconnect the E4 blower motor connector.
(b) Connect the positive (+) lead from the battery to terminal 2 and the negative (-) lead to terminal 1, then check that the blower motor operates smoothly.
OK:
The blower motor operates smoothly.
(c) Measure the current.
Standard current

Tester Connection	Specified Condition
E4-2 (+B) - E4-1 (GND)	1 to 3 A

(d) Reconnect the blower motor connector.

NG → **REPLACE BLOWER MOTOR**

OK

4	CHECK HARNESS AND CONNECTOR (HTR FUSE - MAIN BODY ECU)

Wire Harness Side:

Main Body ECU Rear View

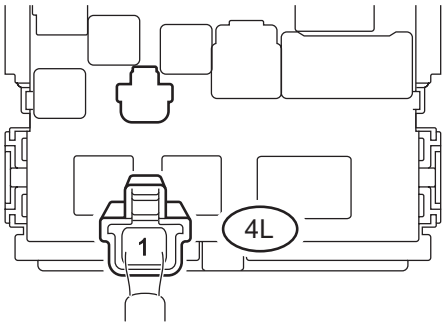

E120471E01

(a) Disconnect the 4L main body ECU connector.
(b) Measure the voltage.

Standard voltage

Tester Connection	Condition	Specified Condition
4L-1 - Body ground	Always	11 to 14 V

(c) Reconnect the main body ECU connector.

NG → **REPAIR OR REPLACE HARNESS OR CONNECTOR**

OK

5	CHECK MAIN BODY ECU

Main Body ECU Rear View:

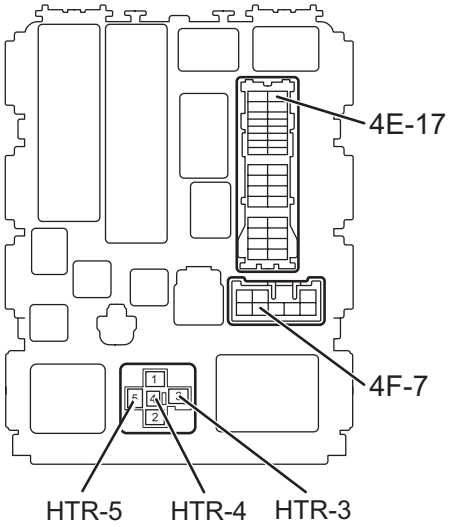

Main Body ECU Front View:

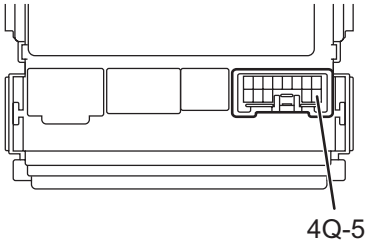

E120470E01

(a) Remove the HTR relay from the main body ECU.
(b) Measure the resistance.
Standard resistance

Tester Connection	Specified Condition
4F-7 - HTR-3	Below 1 Ω
4E-17 - HTR-4	Below 1 Ω

(c) Measure the voltage.
Standard voltage

Tester Connection	Condition	Specified Condition
HTR-5 - Body ground	Always	11 to 14 V

(d) Reinstall the HTR relay.
(e) Measure the voltage.
Standard voltage

Tester Connection	Condition	Specified Condition
4Q-5 - Body ground	Ignition switch ON	11 to 14 V

NG → **REPLACE MAIN BODY ECU**

OK

6 CHECK HARNESS AND CONNECTOR (MAIN BODY ECU - HEATER CONTROL (BLOWER SWITCH))

Wire Harness Side:

Heater Control (Blower Switch) Connector

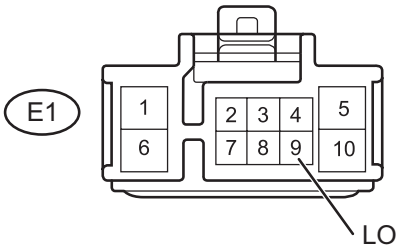

Front View

E120224E04

(a) Disconnect the E1 heater control (blower switch) connector.
(b) Measure the voltage.
Standard voltage

Tester Connection	Condition	Specified Condition
E1-9 (LO) - Body ground	Ignition switch ON	11 to 14 V

(c) Reconnect the heater control (blower switch) connector.

NG → **REPAIR OR REPLACE HARNESS OR CONNECTOR**

OK

7 CHECK HARNESS AND CONNECTOR (MAIN BODY ECU - BLOWER MOTOR)

Wire Harness Side:

Blower Motor Connector

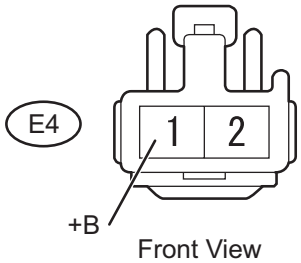

Front View

E119793E04

(a) Disconnect the E4 blower motor connector.
(b) Measure the voltage.
Standard voltage

Tester Connection	Condition	Specified Condition
E4-1 (+B) - Body ground	Ignition switch ON	11 to 14 V

(c) Reconnect the blower motor connector.

NG → **REPAIR OR REPLACE HARNESS OR CONNECTOR**

OK

8 CHECK HARNESS AND CONNECTOR (BLOWER RESISTOR - BLOWER MOTOR)

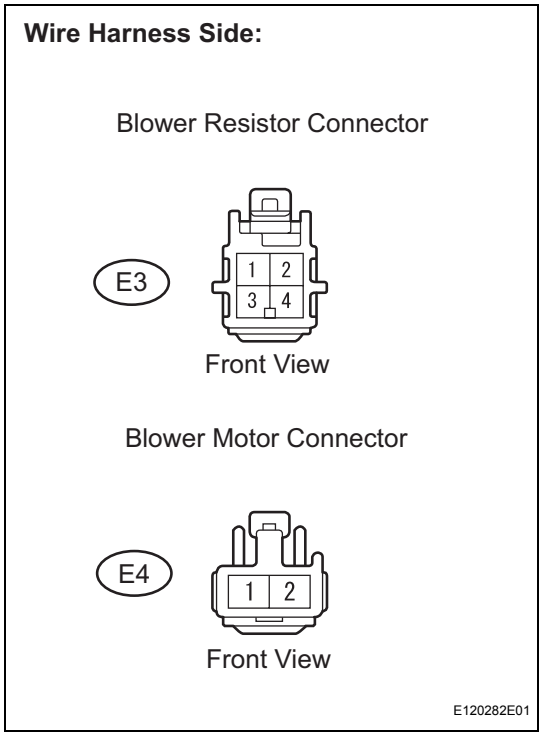

(a) Disconnect the E3 blower resistor connector.
(b) Disconnect the E4 blower motor connector.
(c) Measure the resistance.
Standard resistance

Tester Connection	Specified Condition
E3-4 - E4-1	Below 1 Ω

(d) Reconnect the blower resistor connector.
(e) Reconnect the blower motor connector.

NG → **REPAIR OR REPLACE HARNESS OR CONNECTOR**

OK

9 INSPECT BLOWER RESISTOR

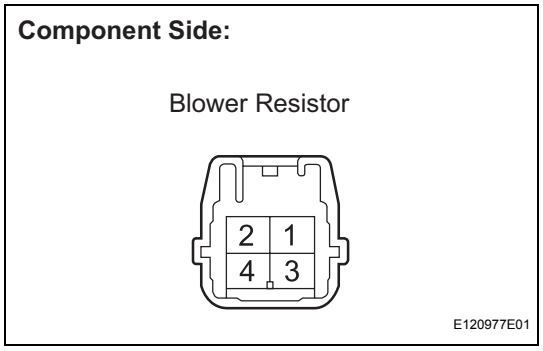

(a) Remove the blower resistor.
(b) Measure the resistance.
Standard resistance

Tester Connection	Specified Condition
4 - 1	3.12 to 3.60Ω
4 - 3	1.45 to 1.67Ω
4 - 2	0.52 to 0.60Ω

(c) Reinstall the blower resistor.

NG → **REPLACE BLOWER RESISTOR**

OK

10 INSPECT HEATER CONTROL (BLOWER SWITCH)

Component Side:

Heater Control (Blower Switch)

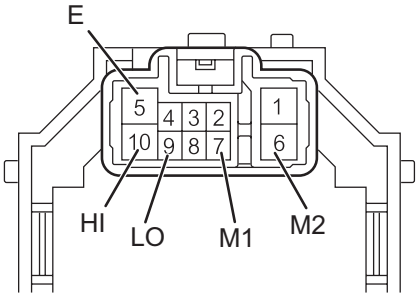

E117010E05

(a) Remove the heater control (blower switch).
(b) Measure the resistance.
Standard resistance

Switch Position	Tester Connection	Specified Condition
0	ALL - 5 (E)	10 kΩ or higher
1	9 (LO) - 5 (E)	Below 1 Ω
1 - 2	9 (LO) - 5 (E) - 7 (M1)	Below 1 Ω
2	9 (LO) - 5 (E) - 7 (M1)	Below 1 Ω
2 - 3	9 (LO) - 5 (E) - 7 (M1) - 6 (M2)	Below 1 Ω
3	9 (LO) - 5 (E) - 6 (M2)	Below 1 Ω
3 - 4	9 (LO) - 5 (E) - 6 (M2) - 10 (HI)	Below 1 Ω
4	9 (LO) - 5 (E) - 10 (HI)	Below 1 Ω

(c) Reinstall the heater control (blower switch).

NG → **REPLACE HEATER CONTROL**

OK

11 CHECK HARNESS AND CONNECTOR (HEATER CONTROL (BLOWER SWITCH) - BLOWER RESISTOR)

Wire Harness Side:

Heater Control (Blower Switch) Connector

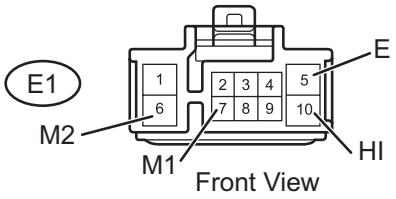

Blower Resistor Connector

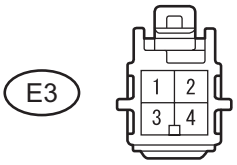

E120283E02

(a) Disconnect the E1 heater control (blower switch) connector.
(b) Disconnect the E3 blower resistor connector.
(c) Measure the resistance.
Standard resistance

Tester Connection	Specified Condition
E1-5 (E) - E3-1	Below 1 Ω
E1-6 (M2) - E3-2	Below 1 Ω
E1-7 (M1) - E3-3	Below 1 Ω
E1-10 (HI) - E3-4	Below 1 Ω

(d) Reconnect the heater control (blower switch) connector.
(e) Reconnect the blower resistor connector.

NG → **REPAIR OR REPLACE HARNESS OR CONNECTOR**

OK

AC

REPAIR OR REPLACE HARNESS OR CONNECTOR (BLOWER RESISTOR - BODY GROUND)

PTC Heater Circuit

DESCRIPTION

PTC heater relays are closed in accordance with signals from the air conditioning amplifier assembly and power is supplied to the PTC heater assembly installed on the radiator heater unit.

WIRING DIAGRAM

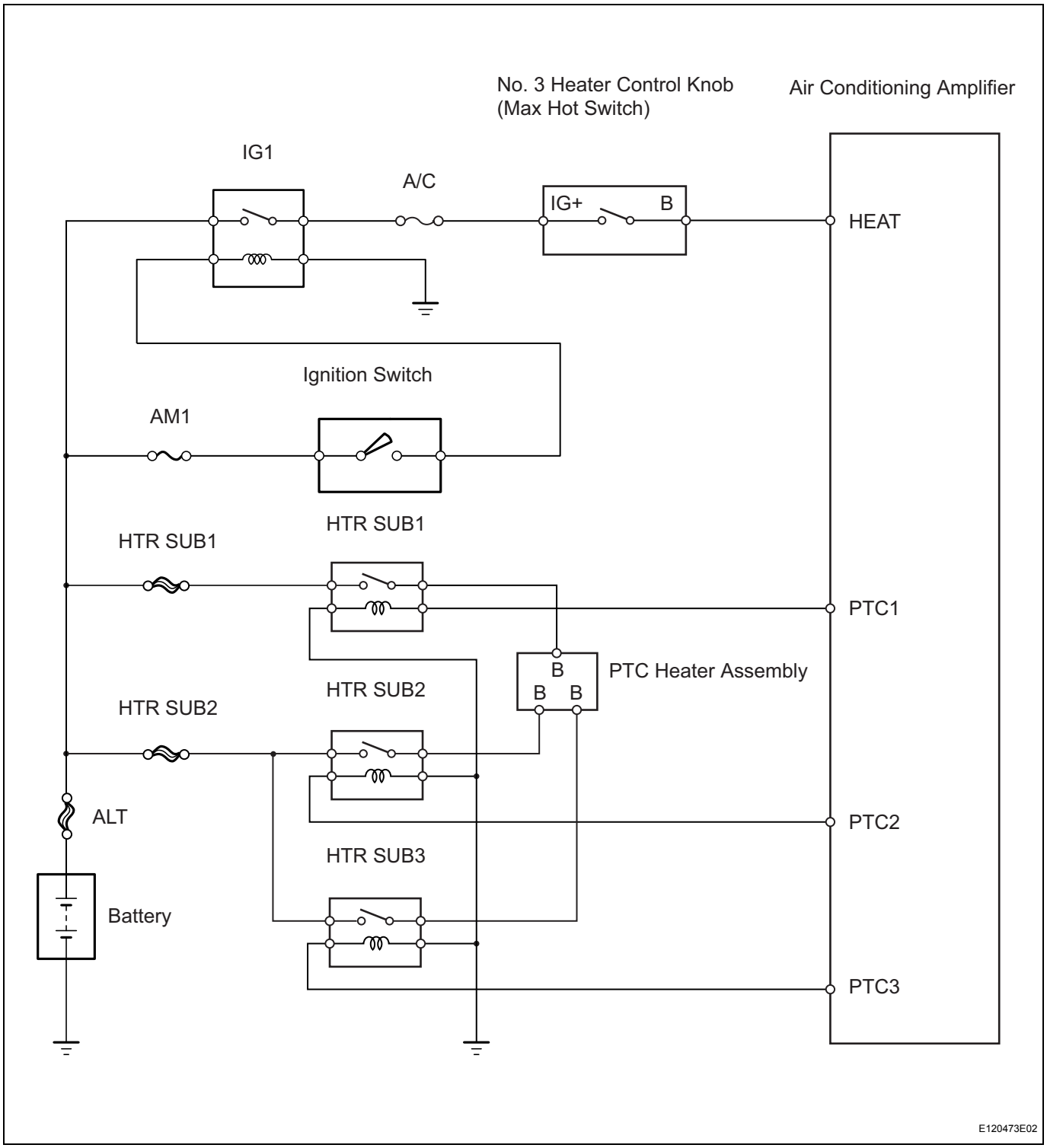

INSPECTION PROCEDURE

1 INSPECT FUSE (A/C, HTR SUB1, HTR SUB2)

(a) Remove the A/C fuse from the main body ECU.
(b) Remove the HTR SUB1 and HTR SUB2 fuses from the engine room relay block.
(c) Measure the resistance.
Standard resistance

Tester Item	Specified Condition
A/C fuse	Below 1 Ω
HTR SUB 1 fuse	Below 1 Ω
HTR SUB 2 fuse	Below 1 Ω

(d) Reinstall the A/C fuse.
(e) Reinstall the HTR SUB1 and HTR SUB2 fuses.

NG → **REPLACE FUSE**

OK

2 INSPECT NO. 3 HEATER CONTROL KNOB

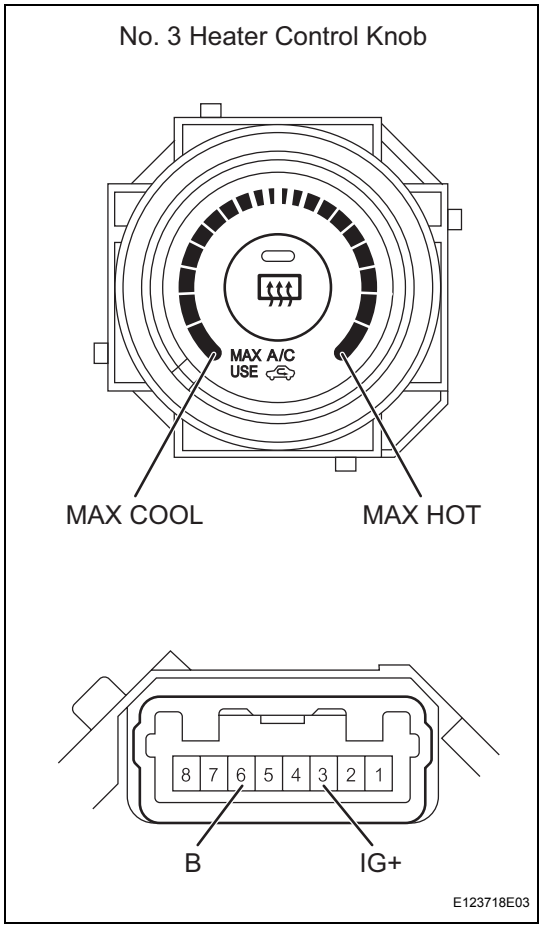

(a) Remove the No. 3 heater control knob.
(b) Measure the resistance.
Standard resistance

Tester Connection	Condition	Specified Condition
3 (IG+) - 6 (B)	Max hot position	Below 1 Ω
3 (IG+) - 6 (B)	Other than max hot position	10 kΩ or higher

(c) Reinstall the No. 3 heater control knob.

NG → **REPLACE NO. 3 HEATER CONTROL KNOB**

OK

3 CHECK HARNESS AND CONNECTOR (MAIN BODY ECU - AIR CONDITIONING AMPLIFIER)

Wire Harness Side:

No. 3 Heater Control Knob Connector

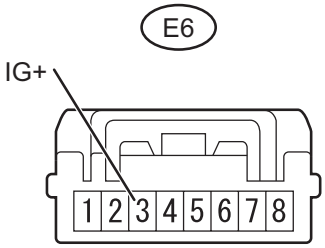

Front View

E120225E03

(a) Disconnect the E6 No. 3 heater control knob connector.
(b) Measure the voltage.
Standard voltage

Tester Connection	Condition	Specified Condition
E6-3 (IG+) - Body ground	Ignition switch ON	11 to 14 V

(c) Reconnect the No. 3 heater control knob connector.

NG → **REPAIR OR REPLACE HARNESS OR CONNECTOR**

OK

4 CHECK HARNESS AND CONNECTOR (No. 3 HEATER CONTROL KNOB - AIR CONDITIONING AMPLIFIER)

Wire Harness Side:

No. 3 Heater Control Knob Connector

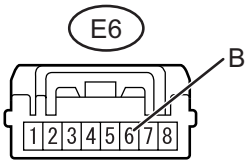

Front View

Air Conditioning Amplifier Connector

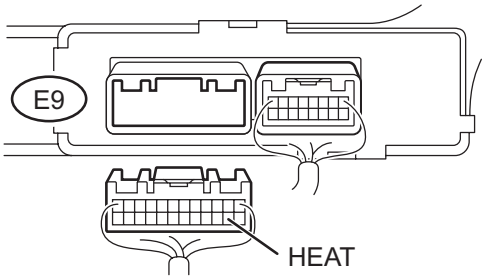

E120281E03

(a) Disconnect the E6 No. 3 heater control knob connector.
(b) Disconnect the E9 air conditioning amplifier connector.
(c) Measure the resistance.
Standard resistance

Tester Connection	Specified Condition
E6-6 (B) - E9-14 (HEAT)	Below 1 Ω

(d) Reconnect the No. 3 heater control knob connector.
(e) Reconnect the air conditioning amplifier connector.

NG → **REPAIR OR REPLACE HARNESS OR CONNECTOR**

OK

5 INSPECT AIR CONDITIONING AMPLIFIER

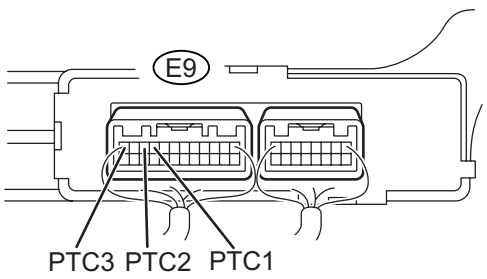

(a) Remove the air conditioning amplifier with its connectors still connected.
(b) Turn the ignition switch ON.
(c) When the PTC heater operating conditions are met (engine at idling speed or faster, ambient temperature is 10°C (50°F) or less, engine coolant temperature is 65°C (149°F) or less, and No. 3 heater control knob setting is MAX HOT), turn the blower switch to the Lo setting.
(d) Wait 30 seconds.
(e) Measure the voltage.
Standard voltage

Tester Connection	Specified Condition
E9-9 (PTC1) - Body ground	11 to 14 V
E9-10 (PTC2) - Body ground	11 to 14 V
E9-12 (PTC3) - Body ground	11 to 14 V

(f) Reinstall the air conditioning amplifier.

NG → **REPLACE AIR CONDITIONING AMPLIFIER**

OK

6 INSPECT PTC HEATER RELAY (HTR SUB1, HTR SUB2, HTR SUB3)

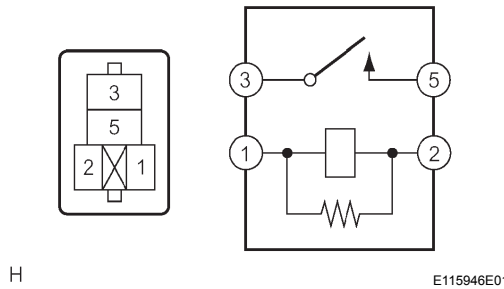

(a) Remove the HTR SUB1 relay from the engine room relay block.
(b) Remove the HTR SUB2 and HTR SUB3 relays from the engine room sub relay block.
(c) Measure the resistance.
Standard resistance

Tester Connection	Specified Condition
3 - 5	10 kΩ or higher
3 - 5	Below 1 Ω (when battery voltage is applied to terminals 1 and 2)

(d) Reinstall the HTR SUB1 relay.
(e) Reinstall the HTR SUB2 and HTR SUB3 relays.

NG → **REPLACE PTC HEATER RELAY**

OK

7	**CHECK HARNESS AND CONNECTOR (AIR CONDITIONING AMPLIFIER - PTC HEATER RELAY)**

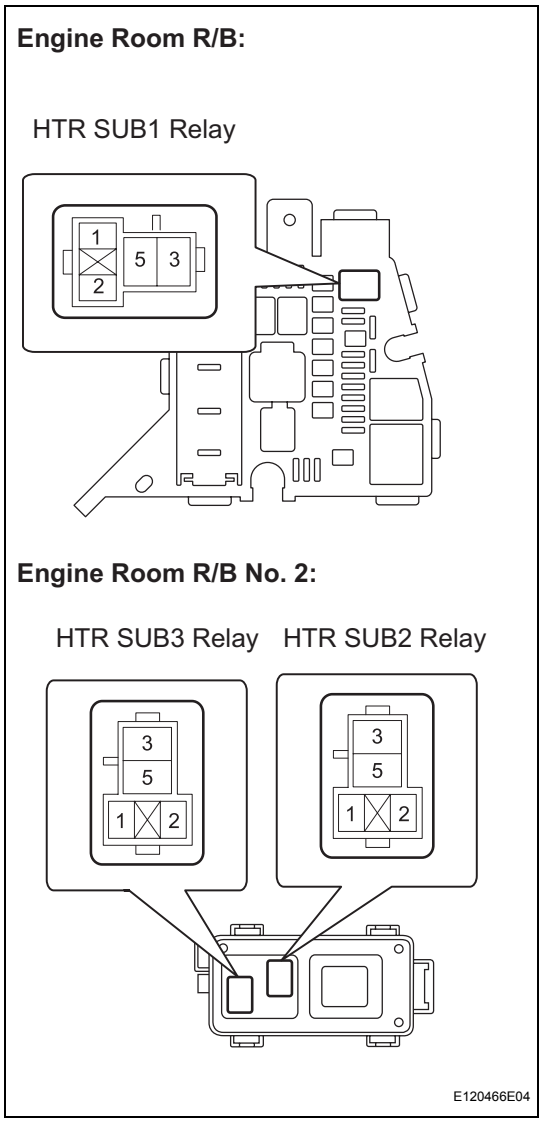

(a) Remove the HTR SUB1 relay from the engine room R/B.
(b) Remove the HTR SUB2 and HTR SUB3 relays from the engine room R/B No. 2.
(c) Turn the ignition switch ON.
(d) When the PTC heater operating conditions are met (engine at idling speed or faster, ambient temperature is 10°C (50°F) or less, engine coolant temperature is 65°C (149°F) or less, and No. 3 heater control knob setting is MAX HOT), turn the blower switch to the Lo setting.
(e) Wait 30 seconds.
(f) Measure the voltage.
Standard voltage.

Tester Connection	Specified Condition
HTR SUB1-2 - Body ground	11 to 14V
HTR SUB2-2 - Body ground	11 to 14V
HTR SUB3-2 - Body ground	11 to 14V

(g) Reinstall the HTR SUB1 relay.
(h) Reinstall the HTR SUB2 and HTR SUB3 relays.

NG → **REPAIR OR REPLACE HARNESS OR CONNECTOR**

OK

8 CHECK HARNESS AND CONNECTOR (PTC HEATER RELAY - BODY GROUND)

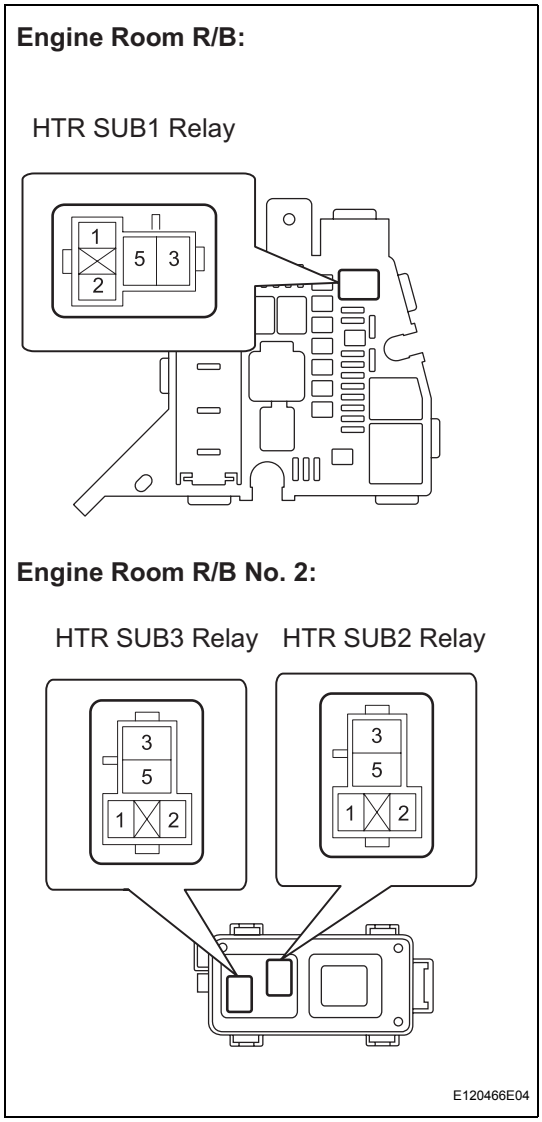

(a) Remove the HTR SUB1 relay from the engine room R/B.
(b) Remove the HTR SUB2 and HTR SUB3 relays from the engine room R/B No. 2.
(c) Measure the resistance.
Standard resistance

Tester Connection	Specified Condition
HTR SUB1-1 - Body ground	Below 1 Ω
HTR SUB2-1 - Body ground	Below 1 Ω
HTR SUB3-1 - Body ground	Below 1 Ω

(d) Reinstall the HTR SUB1 relay.
(e) Reinstall the HTR SUB2 and HTR SUB3 relays.

NG → **REPAIR OR REPLACE HARNESS OR CONNECTOR**

OK

9 INSPECT PTC HEATER ASSEMBLY

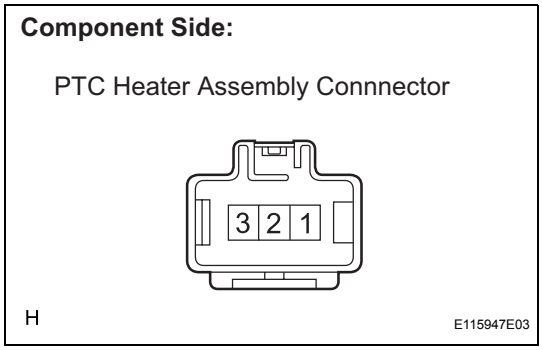

(a) Disconnect the A17 PTC heater assembly connector.
(b) Measure the resistance.
Standard resistance

Tester Connection	Specified Condition
1 - 2	Below 1 Ω
1 - 3	Below 1 Ω
2 - 3	Below 1 Ω

(c) Reconnect the PTC heater assembly connector.

NG → **REPLACE PTC HEATER ASSEMBLY**

OK

10 CHECK HARNESS AND CONNECTOR (BATTERY - PTC HEATER RELAY)

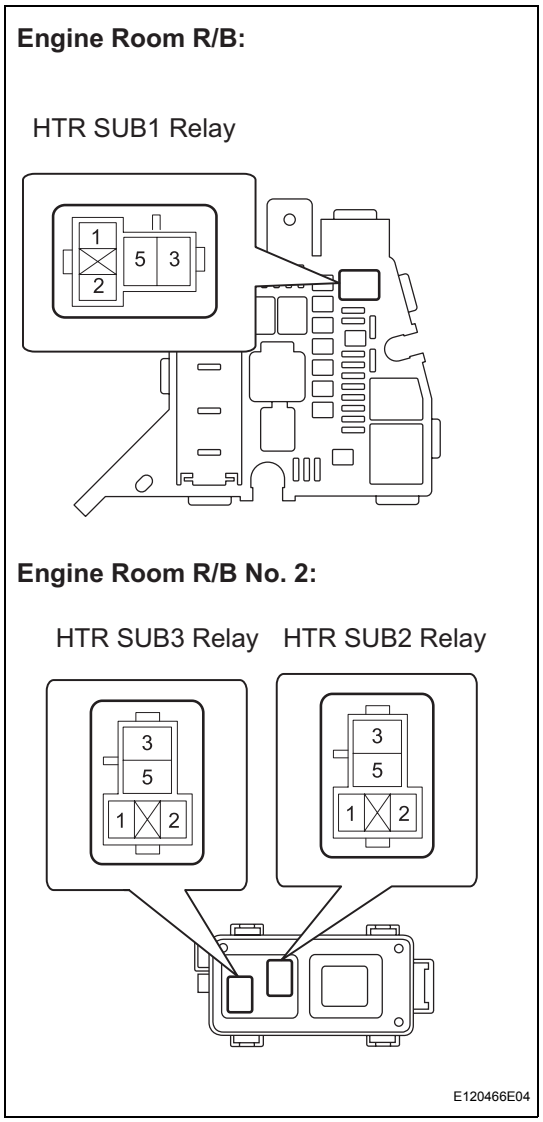

(a) Remove the HTR SUB1 relay from the engine room R/B.
(b) Remove the HTR SUB2 and HTR SUB3 relays from the engine room R/B No. 2.
(c) Measure the voltage.
Standard voltage

Tester Connection	Condition	Specified Condition
HTR SUB1-5 - Body ground	Always	11 to 14 V
HTR SUB2-5 - Body ground	Always	11 to 14 V
HTR SUB3-5 - Body ground	Always	11 to 14 V

(d) Reinstall the HTR SUB1 relay.
(e) Reinstall the HTR SUB2 and HTR SUB3 relays.

NG → **REPAIR OR REPLACE HARNESS OR CONNECTOR**

OK

11 CHECK HARNESS AND CONNECTOR (PTC HEATER RELAY - PTC HEATER ASSEMBLY)

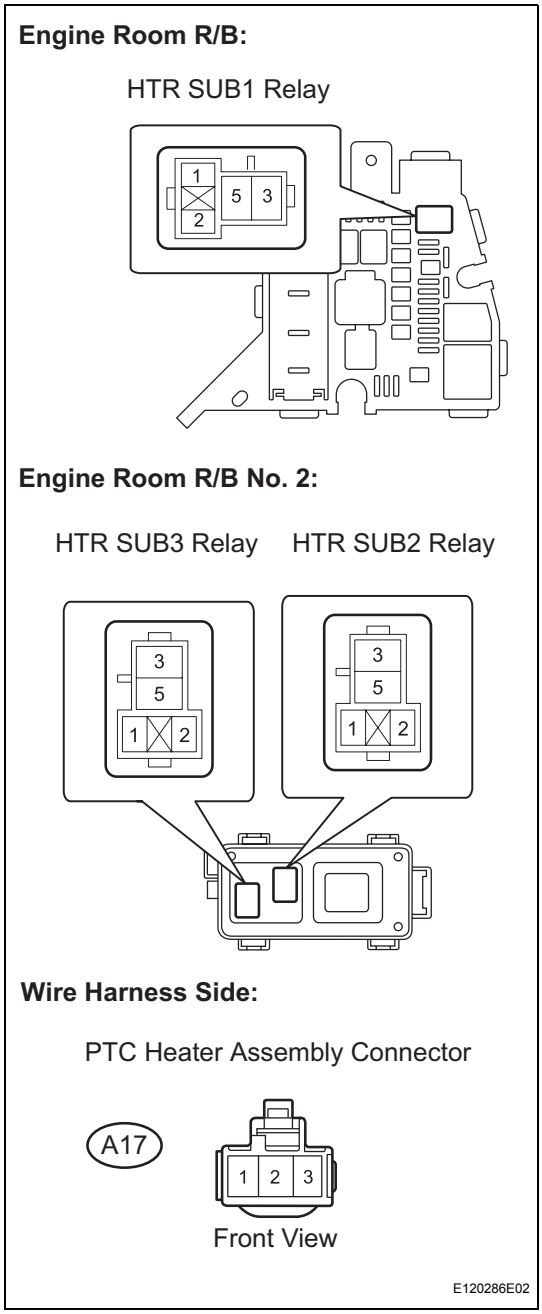

(a) Remove the HTR SUB1 relay from the engine room R/B.
(b) Remove the HTR SUB2 and HTR SUB3 relays from the engine room R/B No. 2.
(c) Disconnect the A17 PTC heater assembly connector.
(d) Measure the resistance.
Standard resistance

Tester Connection	Specified Condition
HTR SUB1-3 - A17-2 (B)	Below 1 Ω
HTR SUB2-3 - A17-3 (B)	Below 1 Ω
HTR SUB3-3 - A17-1 (B)	Below 1 Ω

(e) Reinstall the HTR SUB1 relay.
(f) Reinstall the HTR SUB2 and HTR SUB3 relays.
(g) Reconnect the PTC heater assembly connector.

NG → **REPAIR OR REPLACE HARNESS OR CONNECTOR**

OK

REPLACE AIR CONDITIONING AMPLIFIER

IG Power Source Circuit

DESCRIPTION

This is the main power source supplied to the air conditioning amplifier when the ignition switch is turned on. This power source is used for operating components such as the air conditioning amplifier.

WIRING DIAGRAM

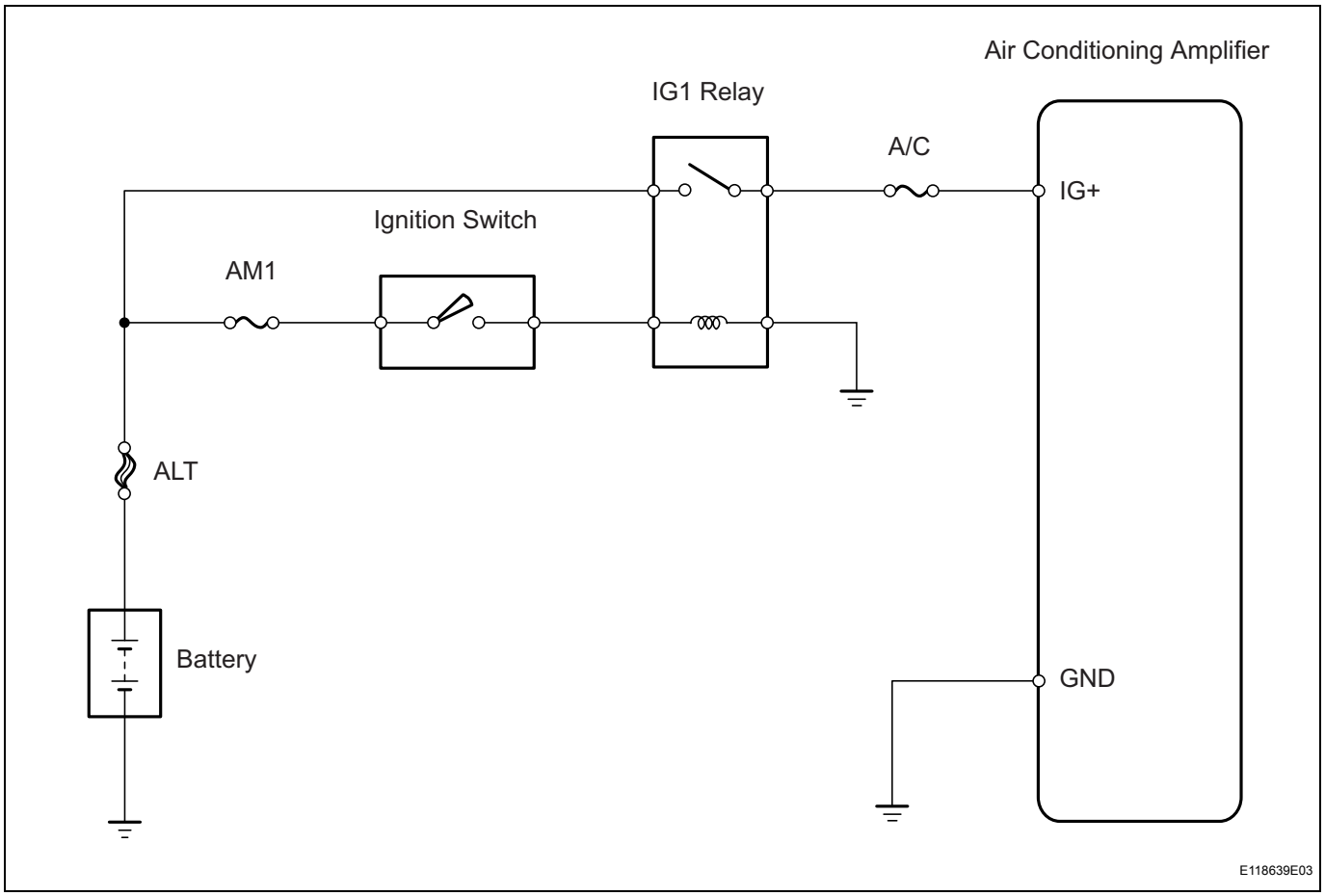

INSPECTION PROCEDURE

HINT:
Start the engine before the inspection. Check the IG1 relay or battery if the engine does not start.

1	INSPECT FUSE (A/C)

(a) Remove the A/C fuse from the main body ECU.
(b) Measure the resistance.
Standard resistance:
Bellow 1 Ω
(c) Reinstall the A/C fuse.

NG → **REPLACE FUSE**

OK

2 INSPECT AIR CONDITIONING AMPLIFIER

Wire Harness Side:

Air Conditioning Amplifier Connector

w/o PTC Heater:

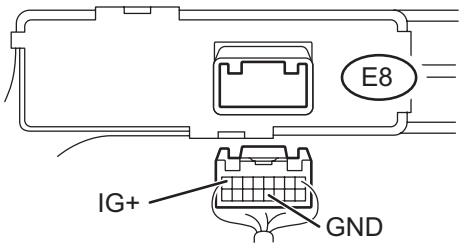

w/ PTC Heater:

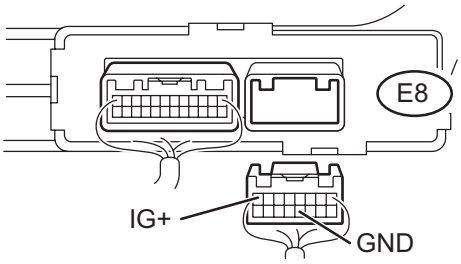

E119775E01

(a) Disconnect the E8 air conditioning amplifier connector.
(b) Measure the voltage.
Standard voltage

Tester Connection	Condition	Specified Condition
E8-8 (IG+) - E8-12 (GND)	Ignition switch ON	11 to 14 V

(c) Reconnect the air conditioning amplifier connector.

NG → **Go to step 3**

OK

REPLACE AIR CONDITIONING AMPLIFIER

3	**CHECK HARNESS AND CONNECTOR (AIR CONDITIONING AMPLIFIER - MAIN BODY ECU)**

Wire Harness Side:

Main Body ECU (Front View)

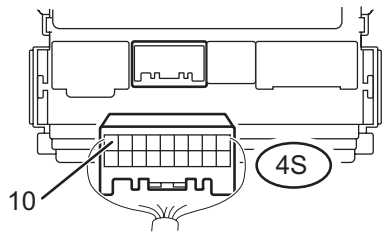

Air Conditioning Amplifier Connector

w/o PTC Heater:

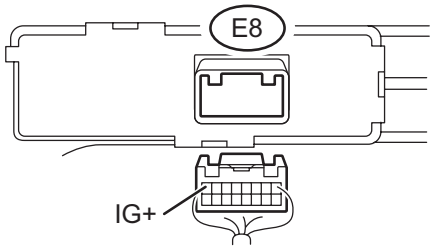

w/ PTC Heater:

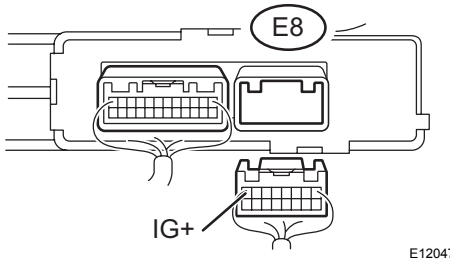

E120472E03

(a) Disconnect the E8 air conditioning amplifier connector.
(b) Disconnect the 4S main body ECU connector.
(c) Measure the resistance.
Standard resistance

Tester Connection	Specified Condition
E8-8 (IG+) - 4S-10	Below 1 Ω

(d) Reconnect the air conditioning amplifier connector.
(e) Reconnect the main body ECU connector.

NG → **REPAIR OR REPLACE HARNESS OR CONNECTOR**

OK

4	**CHECK HARNESS AND CONNECTOR (AIR CONDITIONING AMPLIFIER - BODY GROUND)**

(a) Disconnect the E8 air conditioning amplifier connector.

Wire Harness Side :

Air Conditioning Amplifier Connector

w/o PTC Heater:

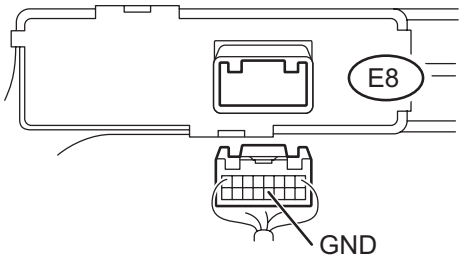

w/ PTC Heater:

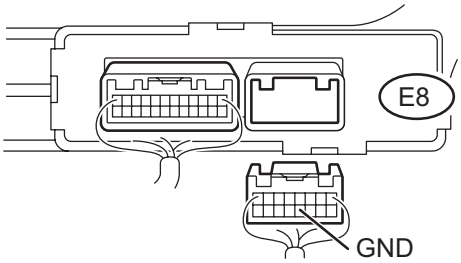

E119775E02

(b) Measure the resistance.
Standard resistance

Tester Connection	Specified Condition
E8-12 (GND) - Body ground	Below 1 Ω

(c) Reconnect the air conditioning amplifier connector.

NG → **REPAIR OR REPLACE HARNESS OR CONNECTOR**

OK

PROCEED TO NEXT CIRCUIT INSPECTION SHOWN IN PROBLEM SYMPTOMS TABLE

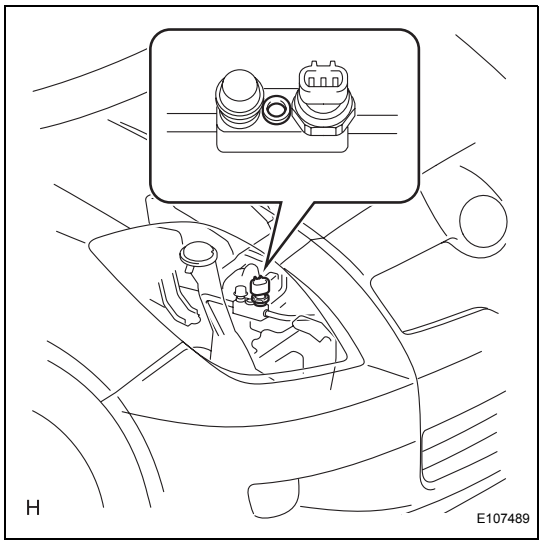

REFRIGERANT

ON-VEHICLE INSPECTION

1. INSPECT REFRIGERANT VOLUME

(a) Check the sight glass on liquid tube sub-assembly A.

Test conditions:
- Engine running at 1,500 rpm.
- Blower speed control switch at HI.
- A/C switch ON.
- Temperature control lever in MAX. COLD position.
- All doors fully open.

Item	Symptom	Amount of Refrigerant	Corrective Procedures
1	Bubbles visible	Insufficient*	(1) Check for gas leakage and repair if necessary (2) Add refrigerant until bubbles disappear
2	No bubbles visible	Empty, insufficient or too much	Refer to items 3 and 4
3	No temperature difference between compressor inlet and outlet	Empty or nearly empty	(1) Check for gas leakage with gas leak detector and repair if necessary (2) Add refrigerant until bubbles disappear
4	Considerable temperature difference between compressor inlet and outlet	Correct or too much	Refer to items 5 and 6
5	Immediately after A/C turned OFF, refrigerant becomes clear	Too much	(1) Drain or discharge refrigerant (2) Bleed air and supply proper amount of purified refrigerant
6	Immediately after A/C turned OFF, refrigerant foams and then becomes clear	Correct	-

HINT:
*: If the ambient temperature is higher than usual but cooling is sufficient, bubbles in the sight glass are permissible.

2. CHECK REFRIGERANT PRESSURE USING MANIFOLD GAUGE SET

(a) This is a method to identify trouble areas by using a manifold gauge set. Read the manifold gauge pressure under the following conditions.

Test conditions:
- Engine warm.
- All doors fully open.
- A/C switch ON.
- Blower speed control switch at HI.
- Engine running at 1,500 rpm.
- Air inlet mode damper set at recirculation.
- Temperature control lever in MAX. COLD position.
- Air temperature at air inlet 30 to 35°C (86 to 95°F).

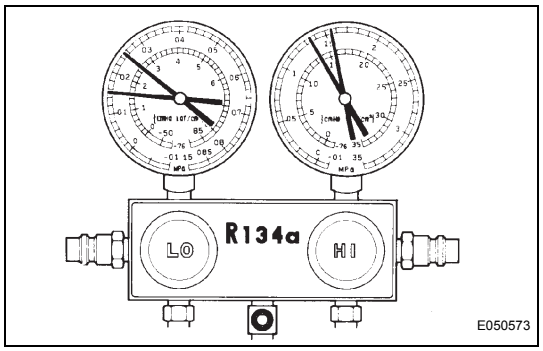

(1) When the refrigerant volume is correct, the gauge reading indicates as follows:
Low pressure side:
0.15 to 0.25 MPa (1.5 to 2.5 kgf/cm^2)
High pressure side:
1.37 to 1.57 MPa (14 to 16 kgf/cm^2)
HINT:
Pressure varies in accordance with certain conditions (outside air temperature, sunlight and wind).

(2) When there is moisture in the refrigeration system:

Condition: Air conditioning system periodically cools and then fails to cool.

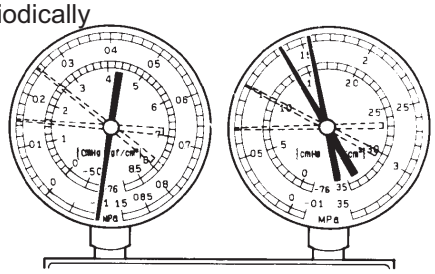

I022117E03

Symptoms	Probable Cause	Diagnosis	Corrective Actions
During operation, pressure on low pressure side cycles between normal and vacuum	Moisture in refrigeration system freezes at expansion valve orifice, causing temporary interruption of cycle However, when melted, returns to normal condition	• Receiver dryer oversaturated • Moisture in refrigeration system freezes at expansion valve orifice and blocks refrigerant circulation	1. Replace receiver dryer 2. Remove moisture from cycle by repeatedly evacuating air 3. Supply appropriate volume of new refrigerant

(3) When cooling is insufficient:

Condition: Air conditioning system does not function effectively.

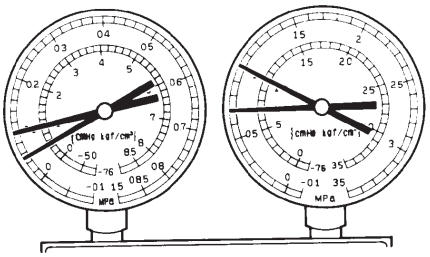

I022118E02

Symptoms	Probable Cause	Diagnosis	Corrective Actions
• Pressure low on both low and high pressure sides • Cooling performance insufficient	Gas leakage from refrigeration system	• Insufficient refrigerant • Refrigerant leakage	1. Check for gas leakage using gas leak detector, and repair if necessary 2. Supply appropriate volume of new refrigerant 3. If indicated pressure value close to 0 when connected to gauge, create vacuum after inspecting and repairing location of leakage

(4) When the circulation of the refrigerant is poor:

Condition: Air conditioning system does not function effectively.

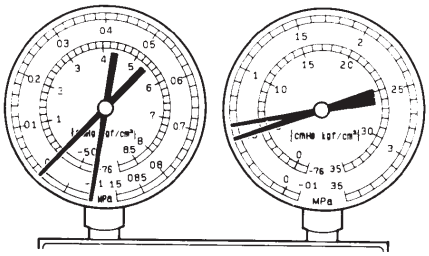

I022119E02

Symptoms	Probable Cause	Diagnosis	Corrective Action
• Pressure low on both low and high pressure sides • Frost exists on piping from condenser to A/C unit	Refrigerant flow obstructed by dirt in condenser	Condenser clogged	Replace condenser

(5) When the refrigerant does not circulate:

Condition: Air conditioning system does not function or functions intermittently.

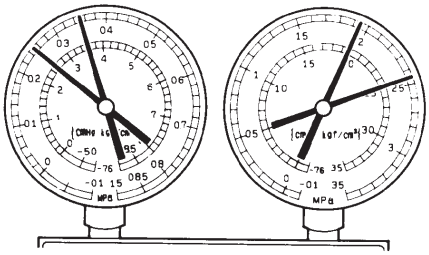

I022121E02

Symptoms	Probable Causes	Diagnosis	Corrective Actions
• Vacuum indicated on low pressure side, and extremely low pressure indicated on high pressure side • Frost or condensation seen on piping on both sides of condenser or expansion valve	• Refrigerant flow obstructed by moisture or dirt in refrigeration system • Refrigerant flow obstructed by gas leakage from expansion valve	Refrigerant does not circulate	1. Check expansion valve 2. Clean expansion valve with compressed air 3. Replace condenser 4. Evacuate air and then supply appropriate volume of new refrigerant 5. For gas leakage from expansion valve, replace expansion valve

(6) When the refrigerant is overcharged or cooling of condenser is insufficient:

Condition: Air conditioning system does not function effectively.

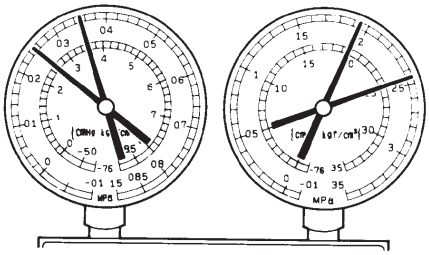

I022121E03

Symptoms	Probable Causes	Diagnosis	Corrective Actions
Pressure extremely high on both sides	• Excessive refrigerant • Cooling performance of condenser insufficient	• Excessive refrigerant • Cooling performance of condenser insufficient	1. Clean condenser fins 2. Check condenser fan motor operation by switching A/C ON 3. If 1 and 2 normal, check amount of refrigerant and supply appropriate volume of refrigerant

(7) When there is air in the refrigeration system:

Condition: Air conditioning system does not function.

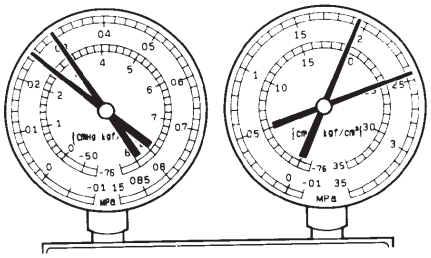

NOTE: These gauge indications occur when the refrigeration system opens and the refrigerant is supplied without performing vacuum purging.

I022122E02

Symptoms	Probable Causes	Diagnosis	Corrective Actions
• Pressure extremely high on both low and high pressure sides • Low pressure piping too hot to touch	Air in refrigeration system	• Air in refrigeration system • Insufficient vacuum purging	1. Check whether compressor oil dirty or insufficient 2. Evacuate air and supply new refrigerant

(8) When the expansion valve malfunctions:

Condition: Air conditioning system does not function effectively.

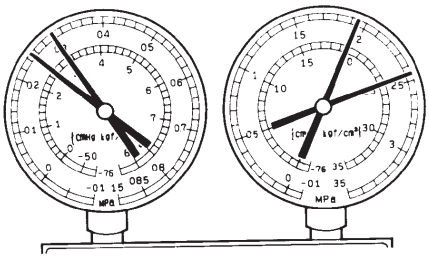

I022123E02

Symptoms	Probable Causes	Diagnosis	Corrective Actions
• Pressure extremely high on both low and high pressure sides • Frost or condensation on piping on low pressure side	Expansion valve malfunction	• Excessive refrigerant in low pressure piping • Expansion valve opening too wide	Replace expansion valve

(9) When the compressor is defective:

Condition: Air conditioning system does not function.

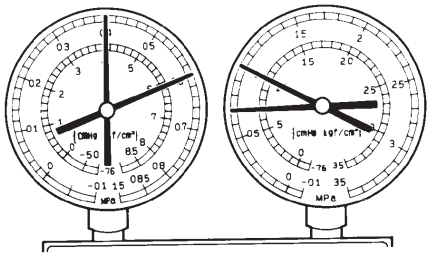

I022124E02

Symptoms	Probable Cause	Diagnosis	Corrective Actions
• Pressure extremely high on both low and high pressure sides • Pressure extremely low on high pressure side	Internal leakage in compressor	• Compression failure of compressor • Leakage from damaged valve or broken sliding parts in compressor	Repair or replace compressor

3. INSPECT IDLING SPEED

(a) Warm up the engine.

(b) Inspect the idling speed when these conditions are established.
- Engine warm
- Transmission shifted to either the neutral or the parking position.

Standard:

for manual transaxle

Condition	Idling Speed
Switch A/C OFF	550 to 650 rpm
Switch A/C ON (A/C Lo → Hi)	700 → 850 rpm

for automatic transaxle

Condition	Idling Speed
Switch A/C OFF	650 to 750 rpm
Switch A/C ON (A/C Lo → Hi)	700 → 850 rpm

If the idling speed is not as specified, check the idle control system.

REPLACEMENT

NOTICE:
When recharging refrigerant, collect together all the refrigerant remaining in the cycle, then recharge and seal the refrigerant as described below. (Do not overcharge.)

1. DISCHARGE REFRIGERANT FROM REFRIGERATION SYSTEM

(a) Start up the engine.
(b) Switch A/C ON.
(c) Turn the blower switch to ON.
(d) Operate the cooler compressor with an engine speed of approximately 1,000 rpm for 5 to 6 minutes to circulate the refrigerant and collect the remaining compressor oil from each component, in the cooler compressor.
(e) Stop the engine.
(f) Remove the caps from the service valves on the refrigerant line.
(g) Connect the Freon collection/recycling device to discharge the refrigerant gas remaining in the refrigeration system.
NOTICE:
Use the Freon collection/recycling device in accordance with the manufacturer's instruction manual.

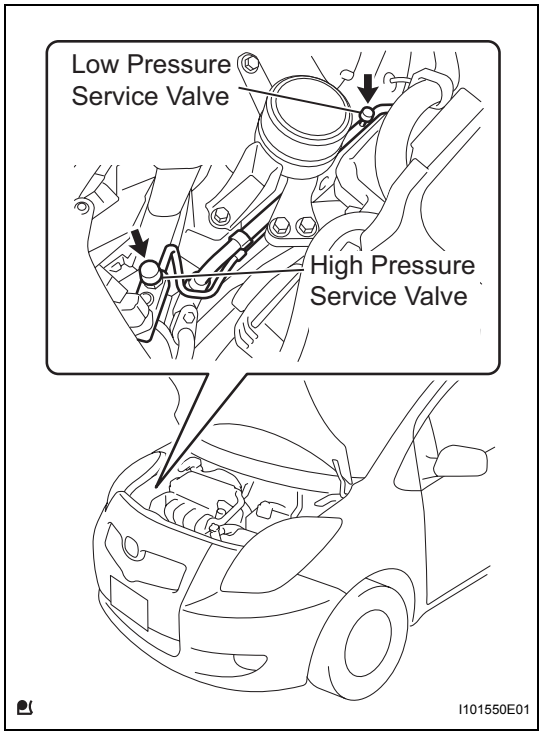

2. CHARGE REFRIGERANT

SST 07110-58060 (07117-58080, 07117-58090, 07117-78050, 07117-88060, 07117-88070, 07117-88080)

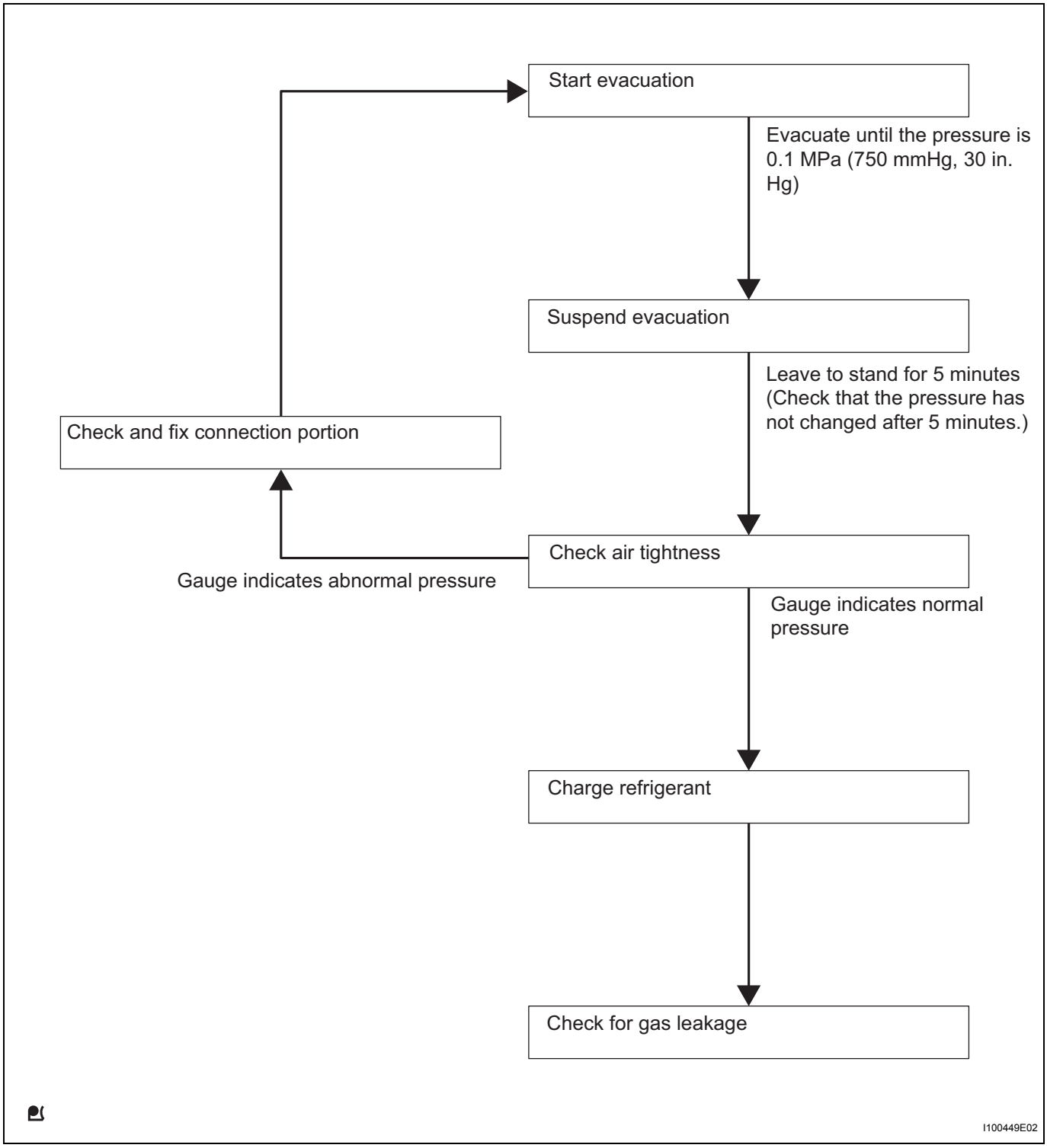

NOTICE:
Charge refrigerant in accordance with equipment manual.

(a) Perform vacuum purging using a vacuum pump.
(b) Charge refrigerant HFC-134a (R134a).
Standard:
330 to 390g (11.64 to 13.76oz.)

NOTICE:
Do not start the engine before charging it with refrigerant as the cooler compressor doesn't work properly without sufficient refrigerant. This could cause the compressor to overheat.
HINT:
- The relationship between refrigerant charge amount and pressure is as follows.

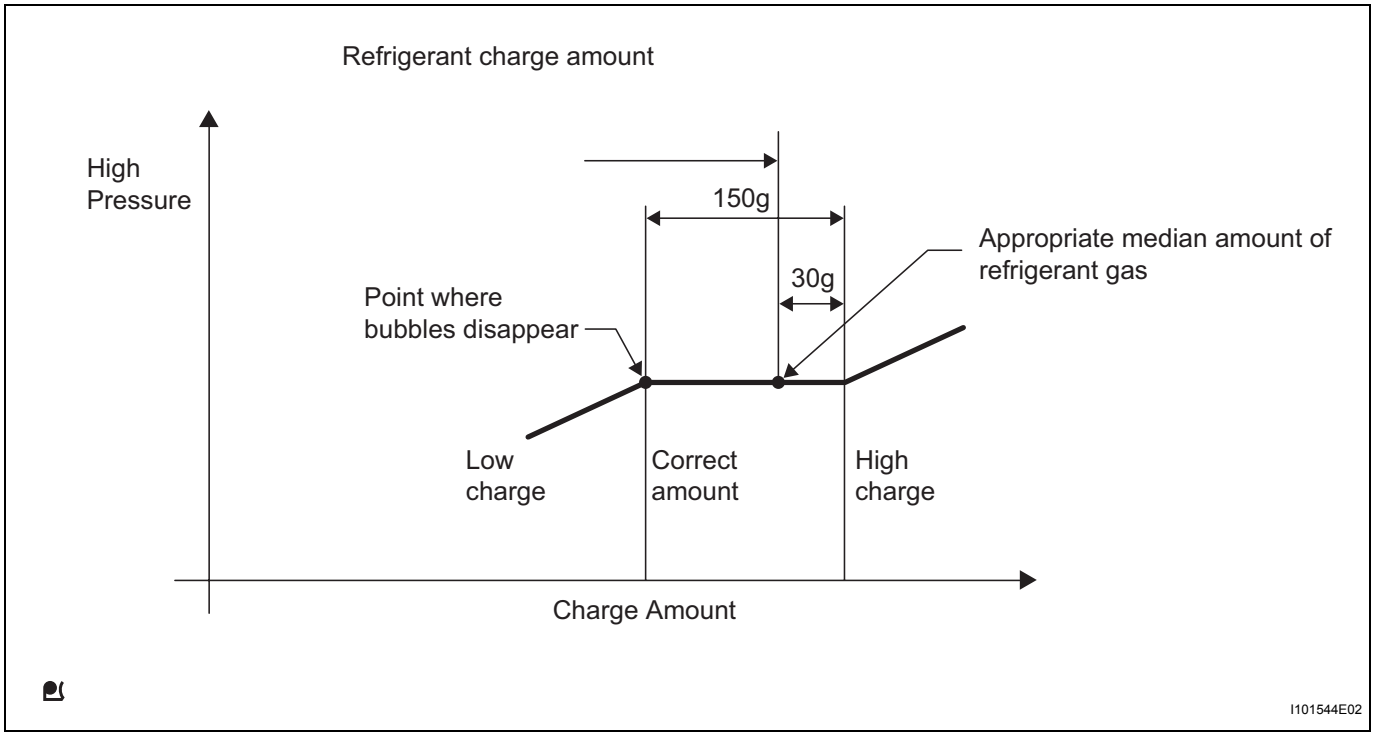

- High Charge Range:
  If refrigerant is overcharged, pressure rises on the high-pressure side. High-pressure cut off frequently occurs. This causes insufficient cooling performance and also insufficient compressor lubrication.
- Low Charge Range:
  Shortage of refrigerant causes insufficient cooling performance and low circulation of refrigerant oil, which shortens compressor life. Operation with insufficient coolant raises refrigerant temperature and causes heat deterioration of rubber seals and hoses. Cracking and thus refrigerant leakage may occur.

(1) Install the caps onto the service valves on the refrigerant line.

3. WARM UP ENGINE
NOTICE:
Warm up the engine at less than 2,000 rpm for 1 minute or more after charging it with refrigerant.

4. CHECK FOR REFRIGERANT LEAKAGE
(a) After recharging the refrigerant gas, check for refrigerant gas leakage using a halogen leak detector.

(b) Perform the operation as follows:
- Stop the engine.
- Secure good ventilation (the halogen leak detector may react to volatile gases other than refrigerant, such as evaporated gasoline or exhaust gas).
- Repeat the test 2 or 3 times.
- Make sure that some refrigerant remains in the refrigeration system.
  When compressor is off: approximately 392 to 588 kPa (4 to 6 kgf*cm^2, 57 to 85 psi)

HINT:
It is impossible for the above pressure to be maintained if there is leakage.

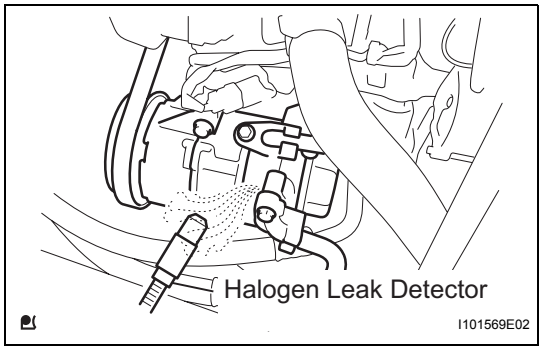

(c) Using the halogen leak detector, check the refrigerant line, especially the connection points, for leakage.

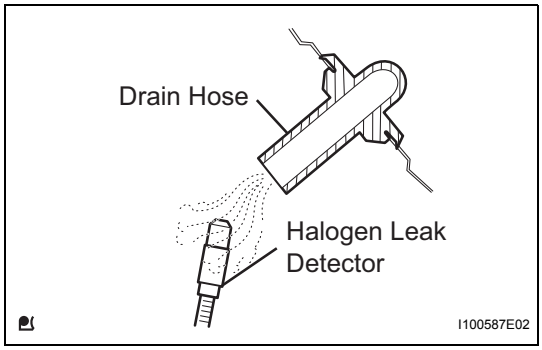

(d) Bring the halogen leak detector close to the drain hose before performing the test.
HINT:
- After the blower motor has stopped, leave the cooling unit for at least 15 minutes.
- Place the halogen leak detector sensor under the drain hose.
- When bringing the halogen leak detector close to the drain hose, make sure that the halogen leak detector does not react to the volatile gases.

If such a reaction is unavoidable, the vehicle must be lifted up.

(e) If a gas leak is not detected from the drain hose, remove the blower motor from the cooling unit. Insert the halogen leak detector sensor into the unit and perform the test.

(f) Disconnect the pressure switch connector and leave it for approximately 20 minutes. Bring the halogen leak detector close to the pressure switch and perform the test.

REFRIGERANT LINE

COMPONENTS

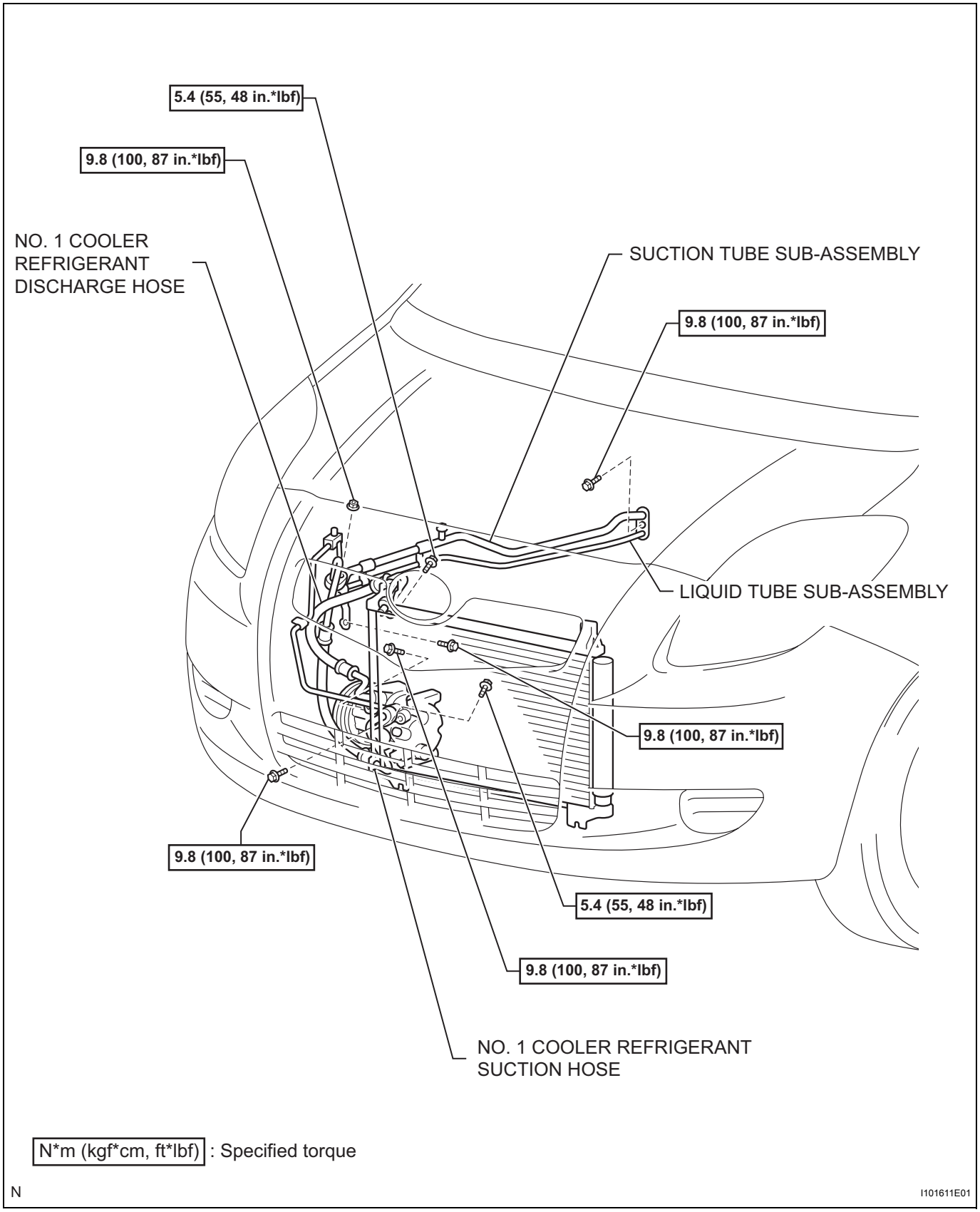

AIR CONDITIONING UNIT (for Sedan)

COMPONENTS

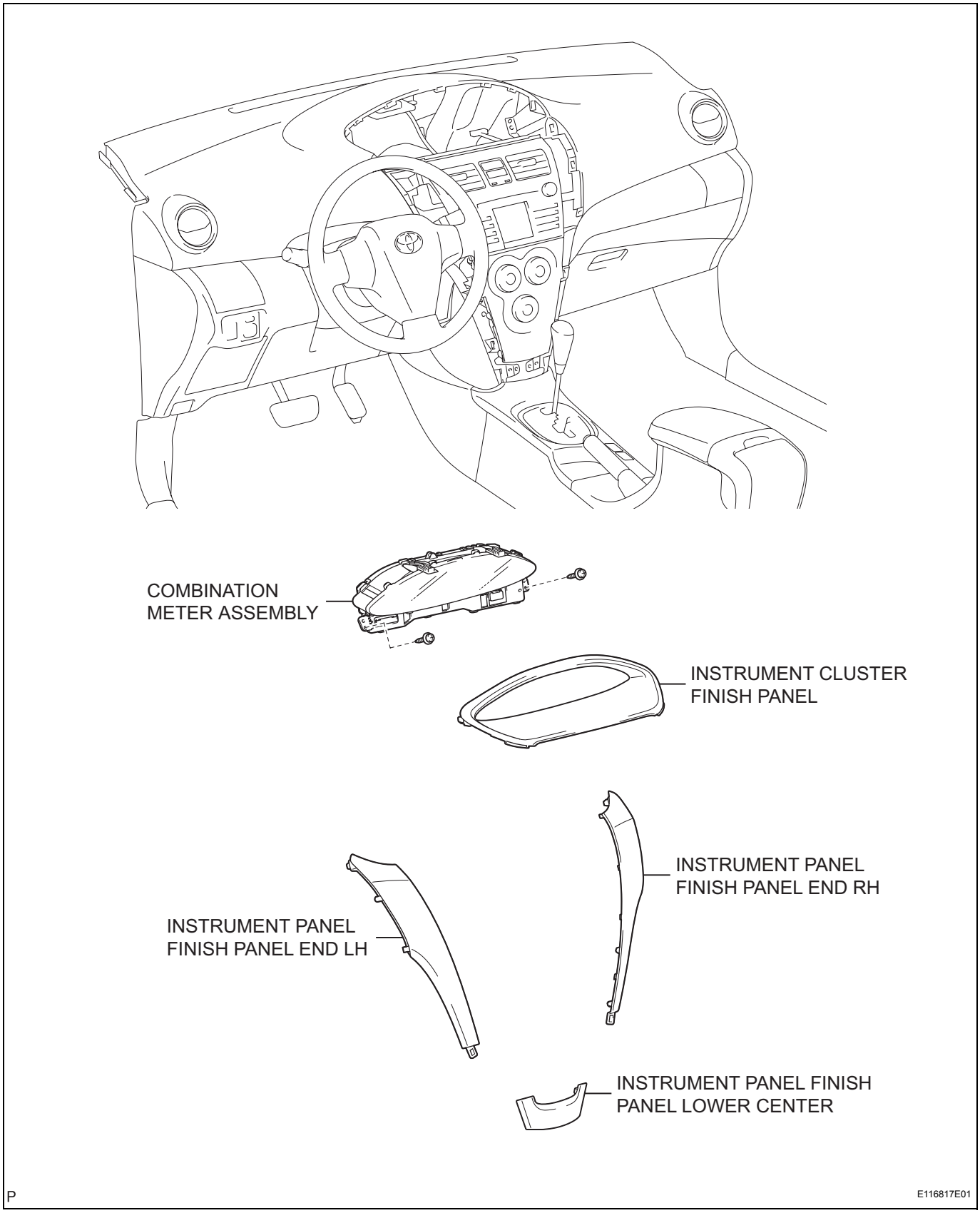

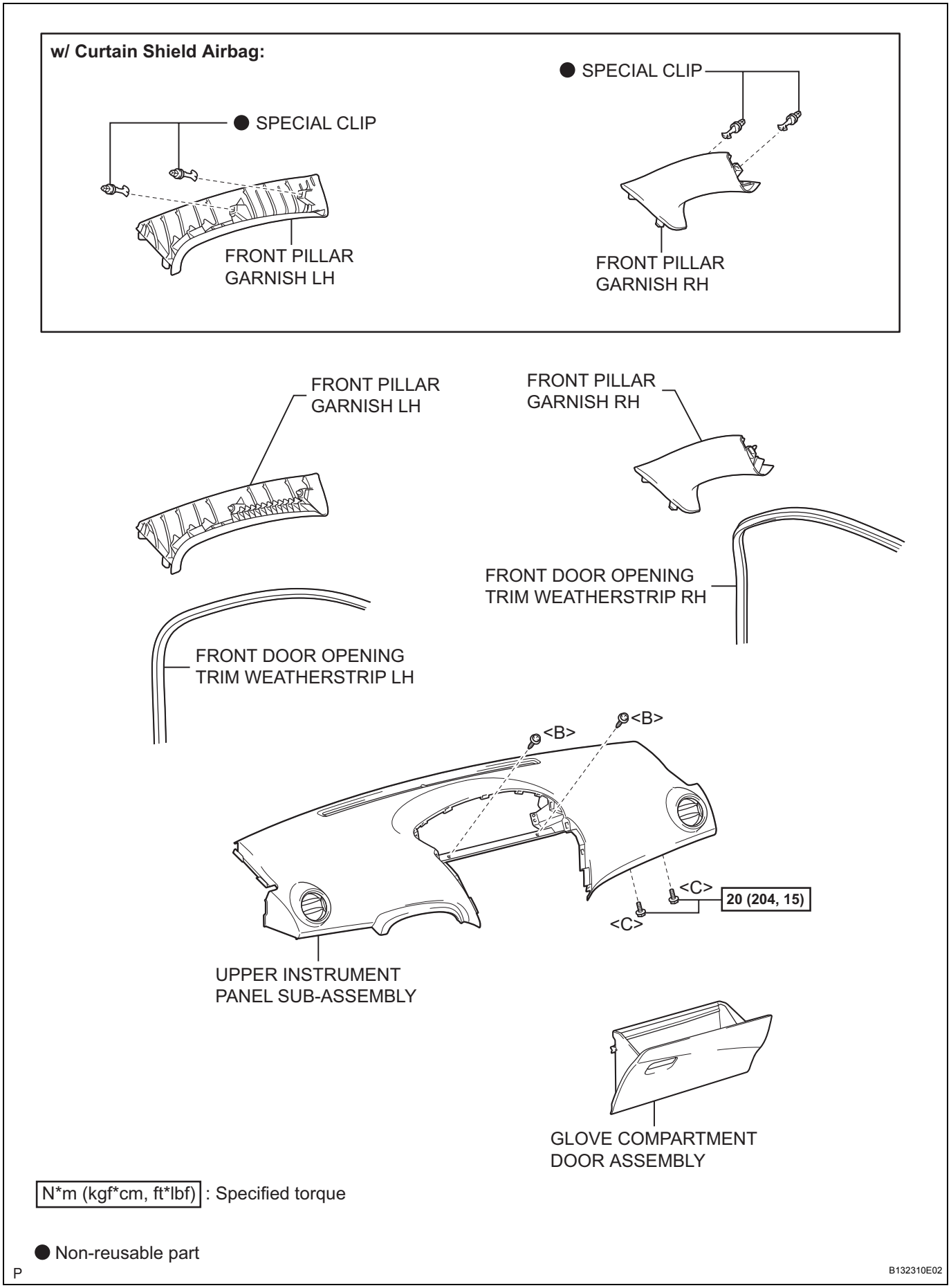
w/ Curtain Shield Airbag:
● SPECIAL CLIP
FRONT PILLAR GARNISH LH
● SPECIAL CLIP
FRONT PILLAR GARNISH RH
FRONT PILLAR GARNISH LH
FRONT PILLAR GARNISH RH
FRONT DOOR OPENING TRIM WEATHERSTRIP RH
FRONT DOOR OPENING TRIM WEATHERSTRIP LH
<B>
<B>
<C>
<C>
20 (204, 15)
UPPER INSTRUMENT PANEL SUB-ASSEMBLY
GLOVE COMPARTMENT DOOR ASSEMBLY
N*m (kgf*cm, ft*lbf) : Specified torque
● Non-reusable part
P
B132310E02

for Integrated w/ Panel:

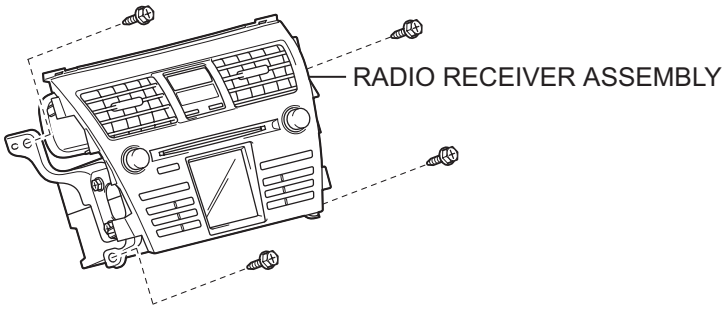

w/o Radio Receiver:

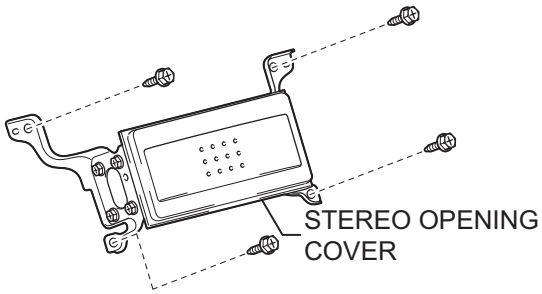

Except for Integrated w/ Panel:

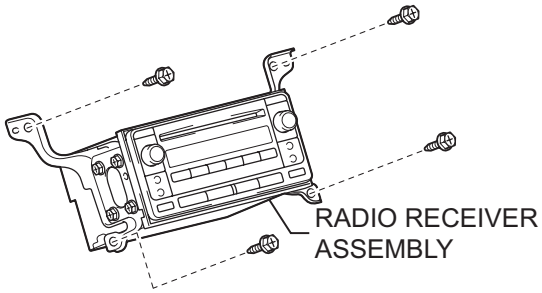

Except for Integrated w/ Panel:

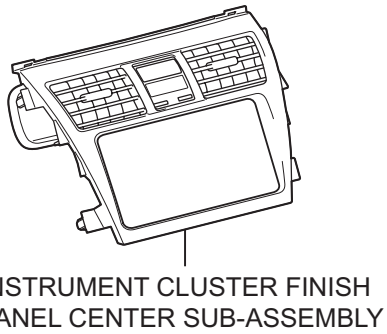

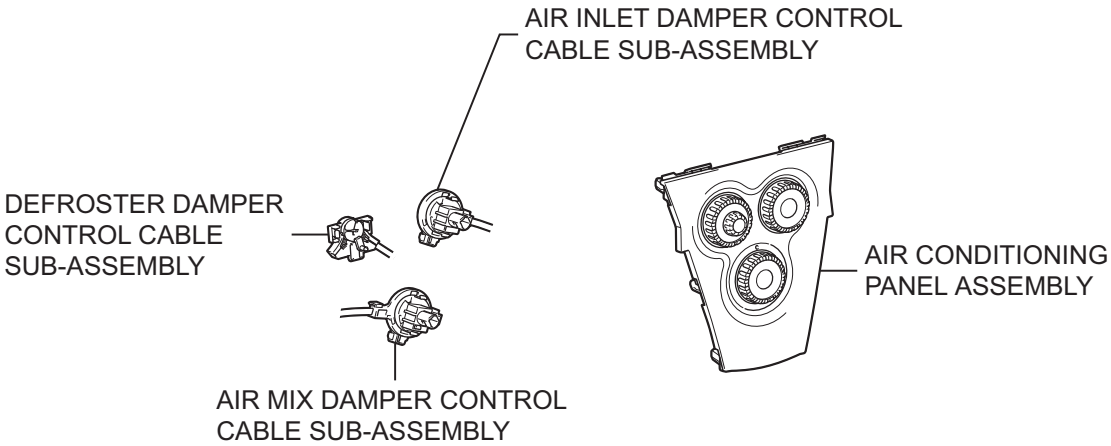

AC

P

B132383E01

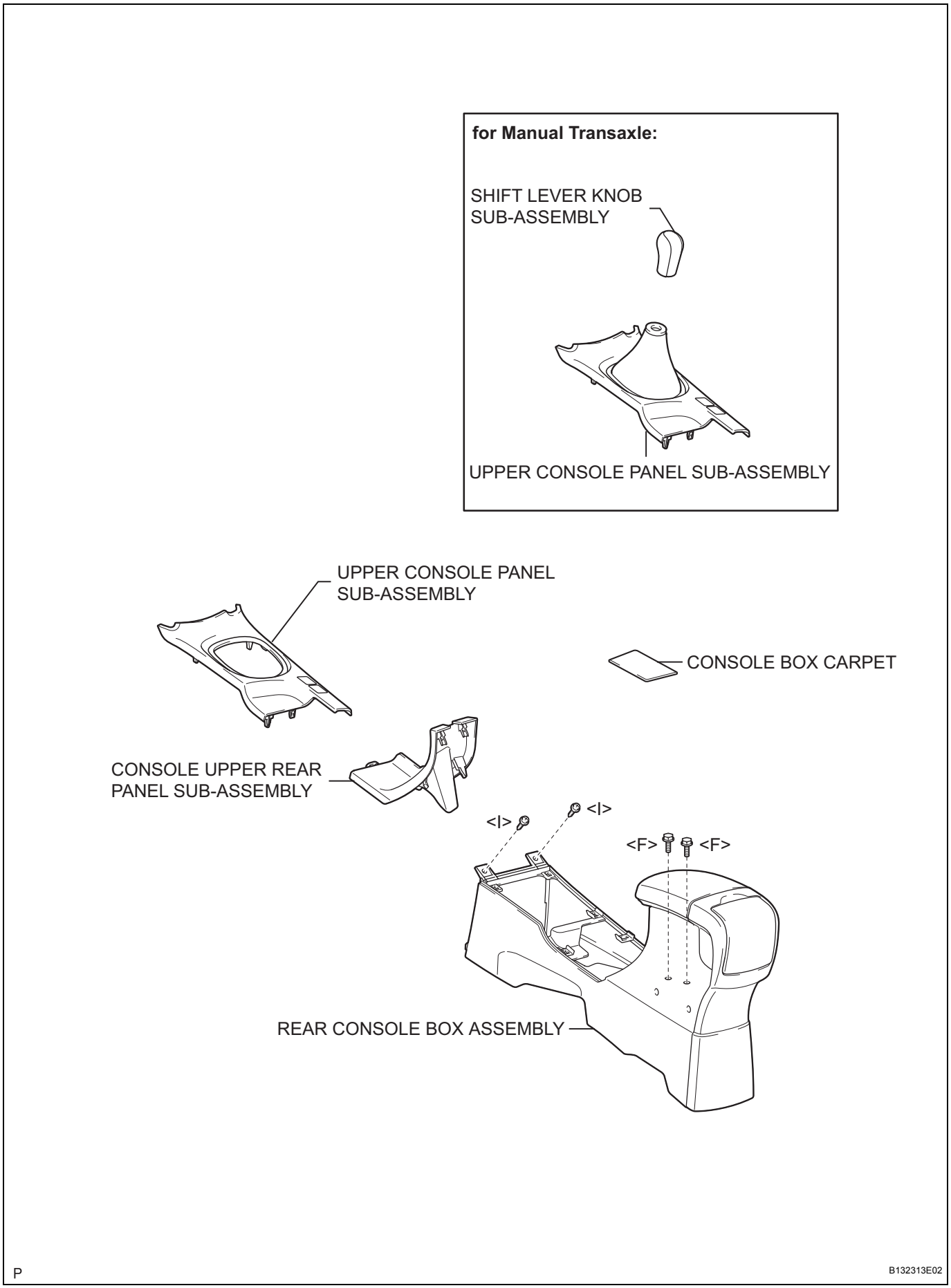
for Manual Transaxle:
SHIFT LEVER KNOB SUB-ASSEMBLY
UPPER CONSOLE PANEL SUB-ASSEMBLY
UPPER CONSOLE PANEL SUB-ASSEMBLY
CONSOLE BOX CARPET
CONSOLE UPPER REAR PANEL SUB-ASSEMBLY
<I>
<I>
<F>
<F>
REAR CONSOLE BOX ASSEMBLY
P
B132313E02

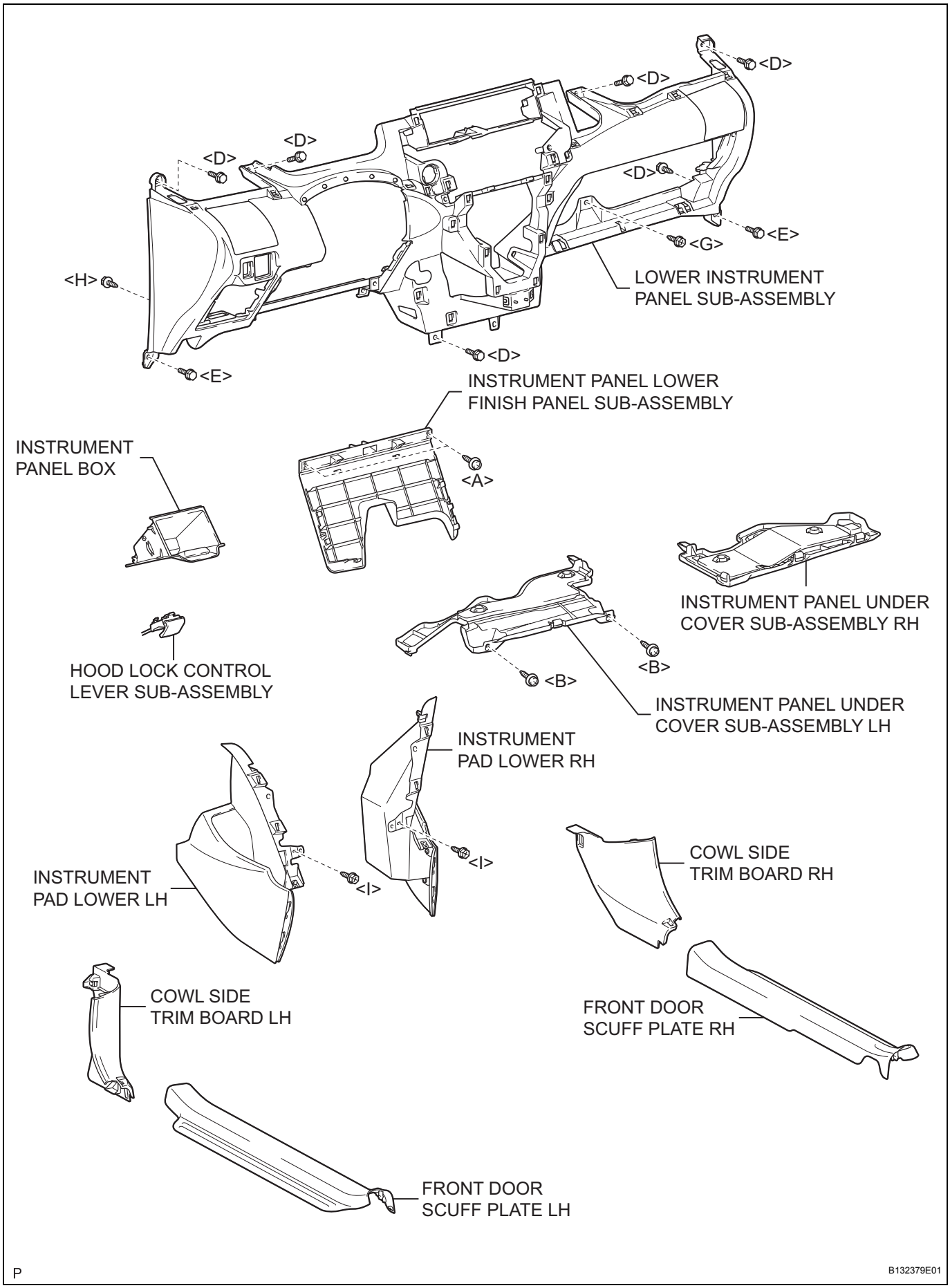
<D>
<D>
<D>
<D>
<D>
<D>
<E>
<G>
<H>
<E>
LOWER INSTRUMENT PANEL SUB-ASSEMBLY
INSTRUMENT PANEL LOWER FINISH PANEL SUB-ASSEMBLY
<A>
INSTRUMENT PANEL BOX
INSTRUMENT PANEL UNDER COVER SUB-ASSEMBLY RH
HOOD LOCK CONTROL LEVER SUB-ASSEMBLY
<B>
<B>
INSTRUMENT PANEL UNDER COVER SUB-ASSEMBLY LH
INSTRUMENT PAD LOWER RH
<I>
<I>
INSTRUMENT PAD LOWER LH
COWL SIDE TRIM BOARD RH
COWL SIDE TRIM BOARD LH
FRONT DOOR SCUFF PLATE RH
FRONT DOOR SCUFF PLATE LH
P
B132379E01

for Manual Transaxle:

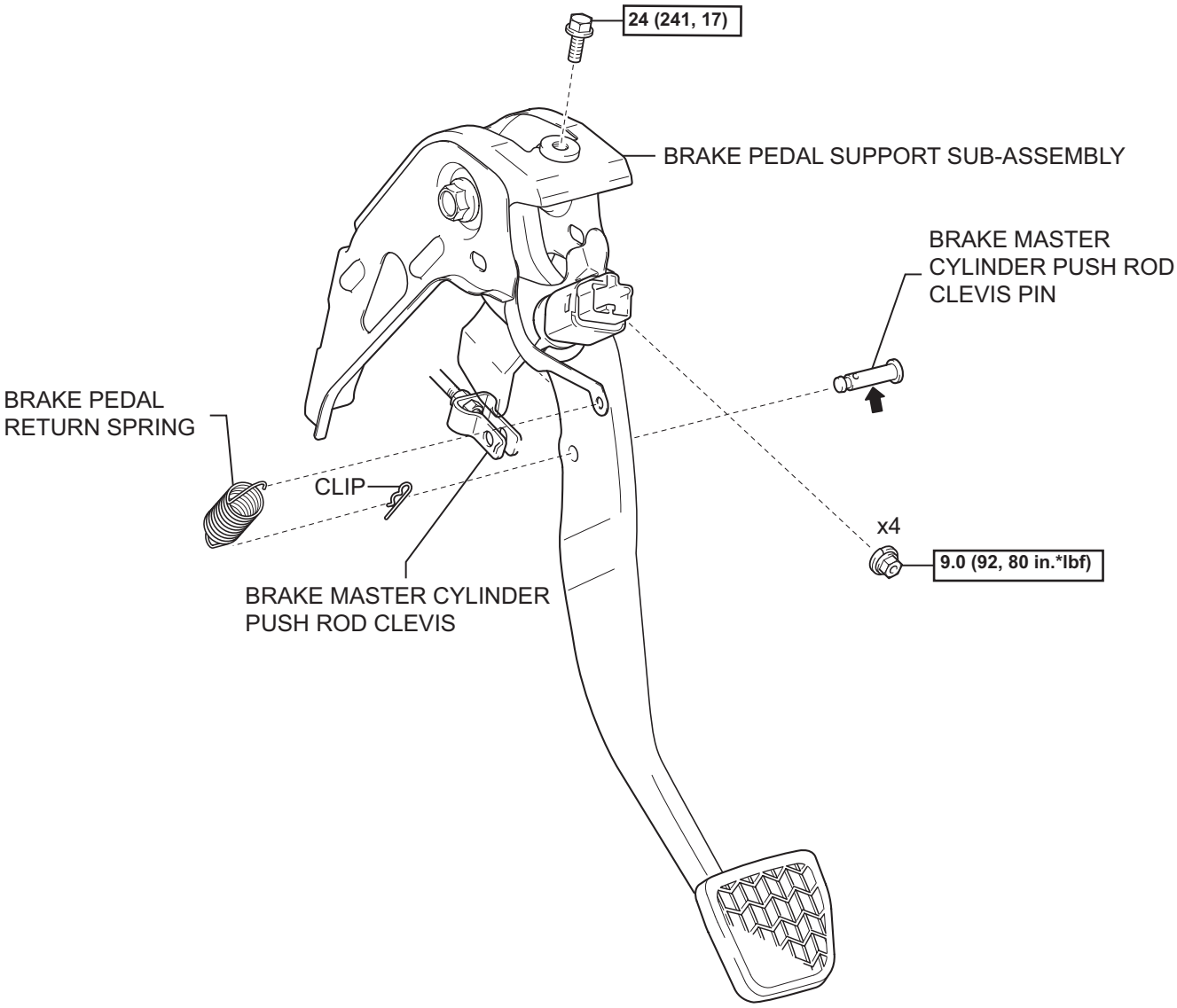

N*m (kgf*cm, ft.*lbf) : Specified torque ⬅ Lithium Soap base glycol grease

P

C118552E02

for Automatic Transaxle:

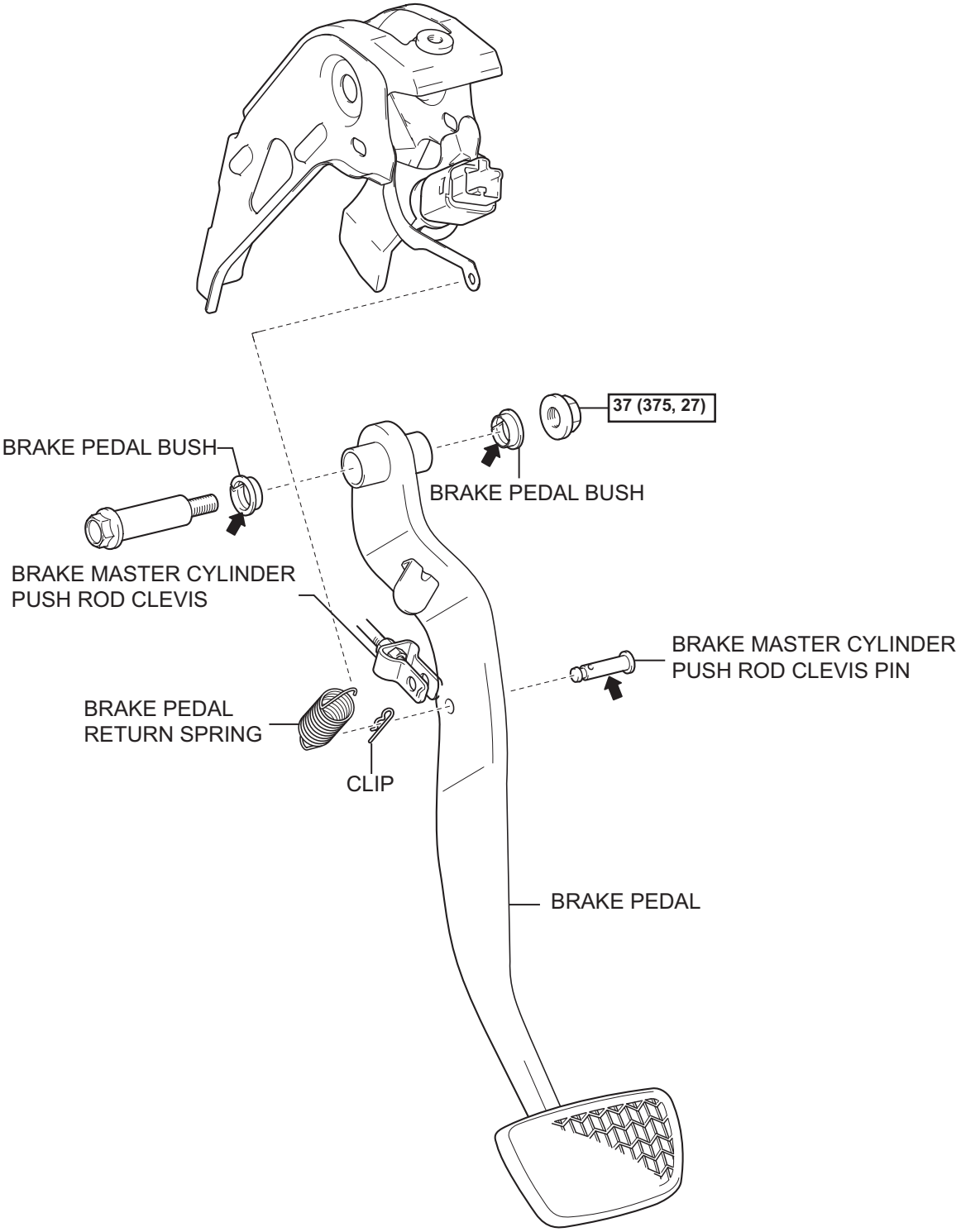

N*m (kgf*cm, ft.*lbf) : Specified torque ⬅ Lithium Soap base glycol grease

P

C118551E03

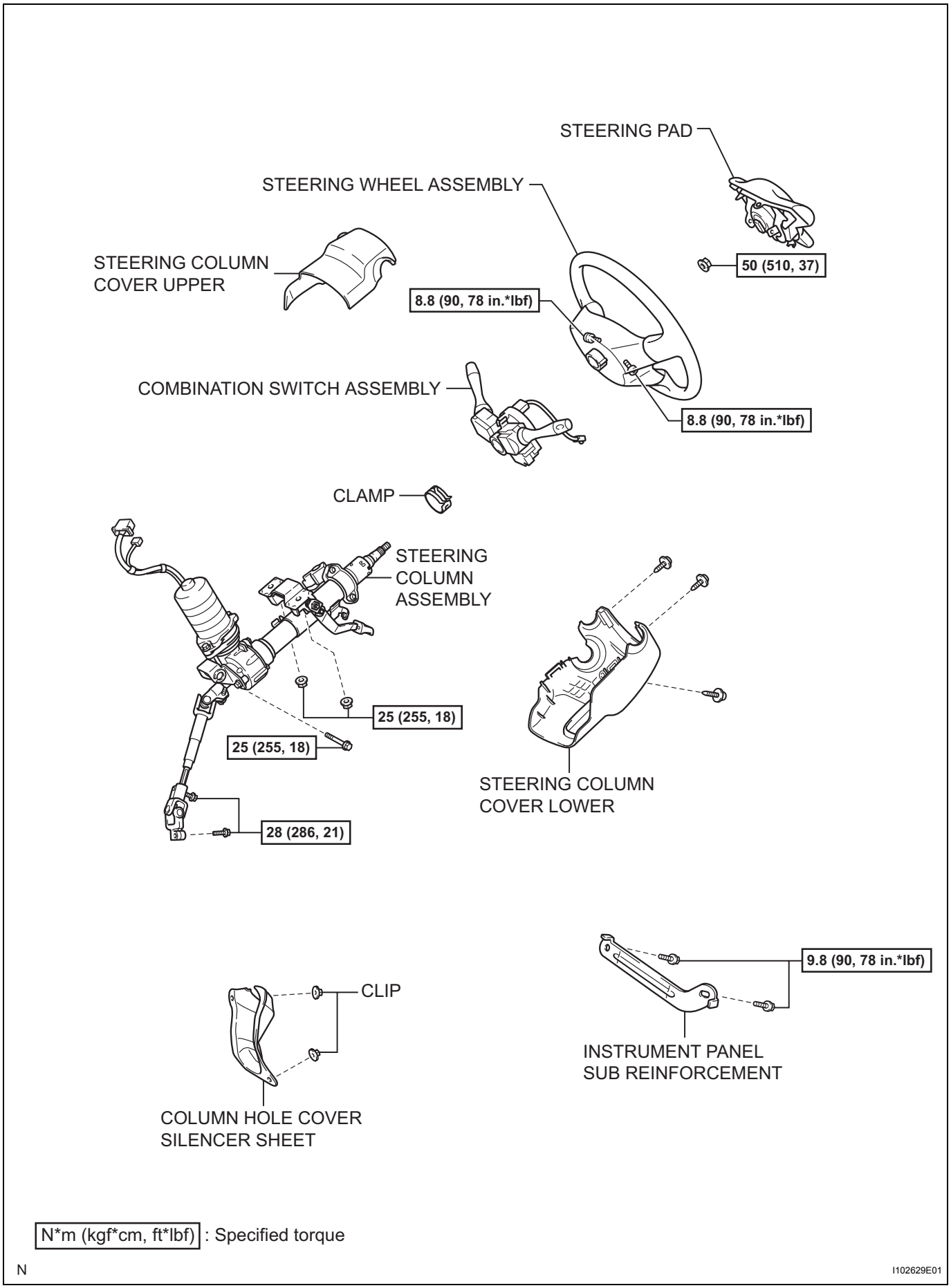
STEERING PAD
STEERING WHEEL ASSEMBLY
STEERING COLUMN COVER UPPER
50 (510, 37)
8.8 (90, 78 in.*lbf)
COMBINATION SWITCH ASSEMBLY
8.8 (90, 78 in.*lbf)
CLAMP
STEERING COLUMN ASSEMBLY
25 (255, 18)
25 (255, 18)
28 (286, 21)
STEERING COLUMN COVER LOWER
9.8 (90, 78 in.*lbf)
CLIP
INSTRUMENT PANEL SUB REINFORCEMENT
COLUMN HOLE COVER SILENCER SHEET
N*m (kgf*cm, ft*lbf) : Specified torque
N
I102629E01

AC

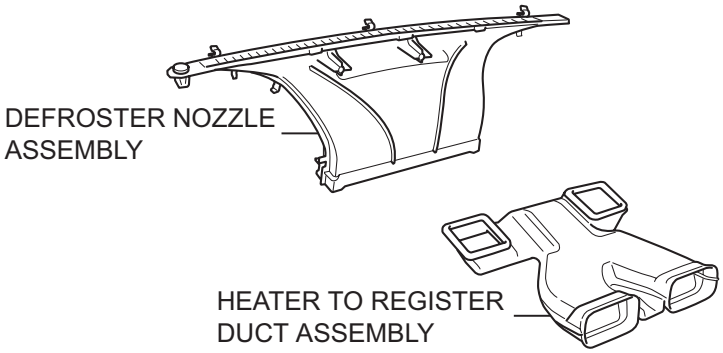

for Cold Area Specification Vehicles:

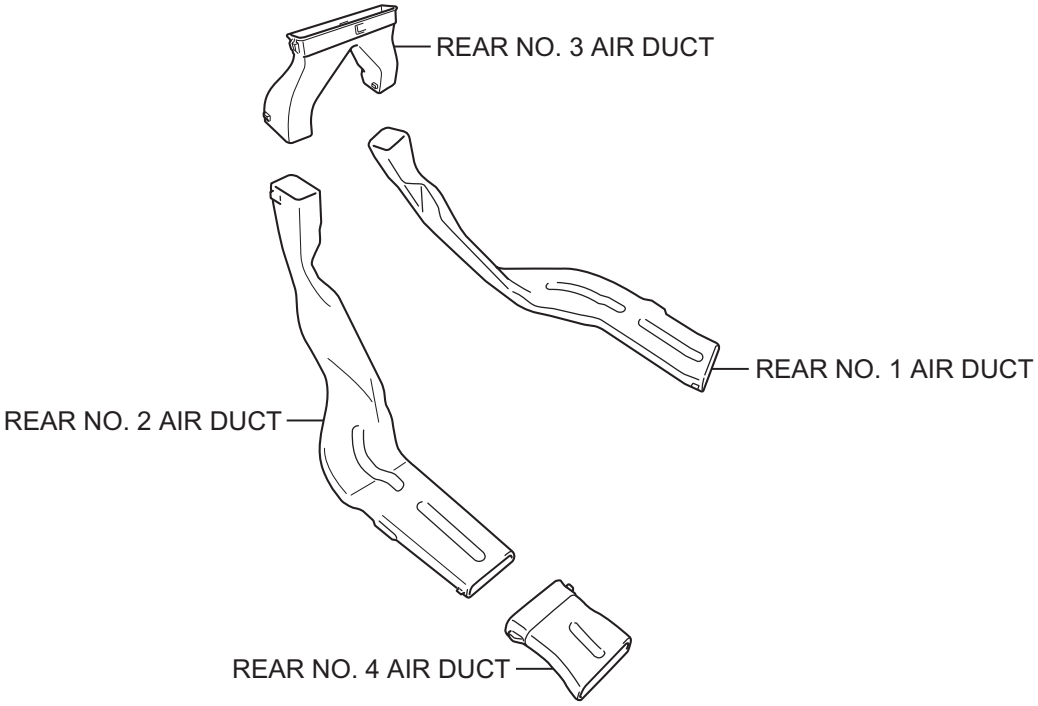

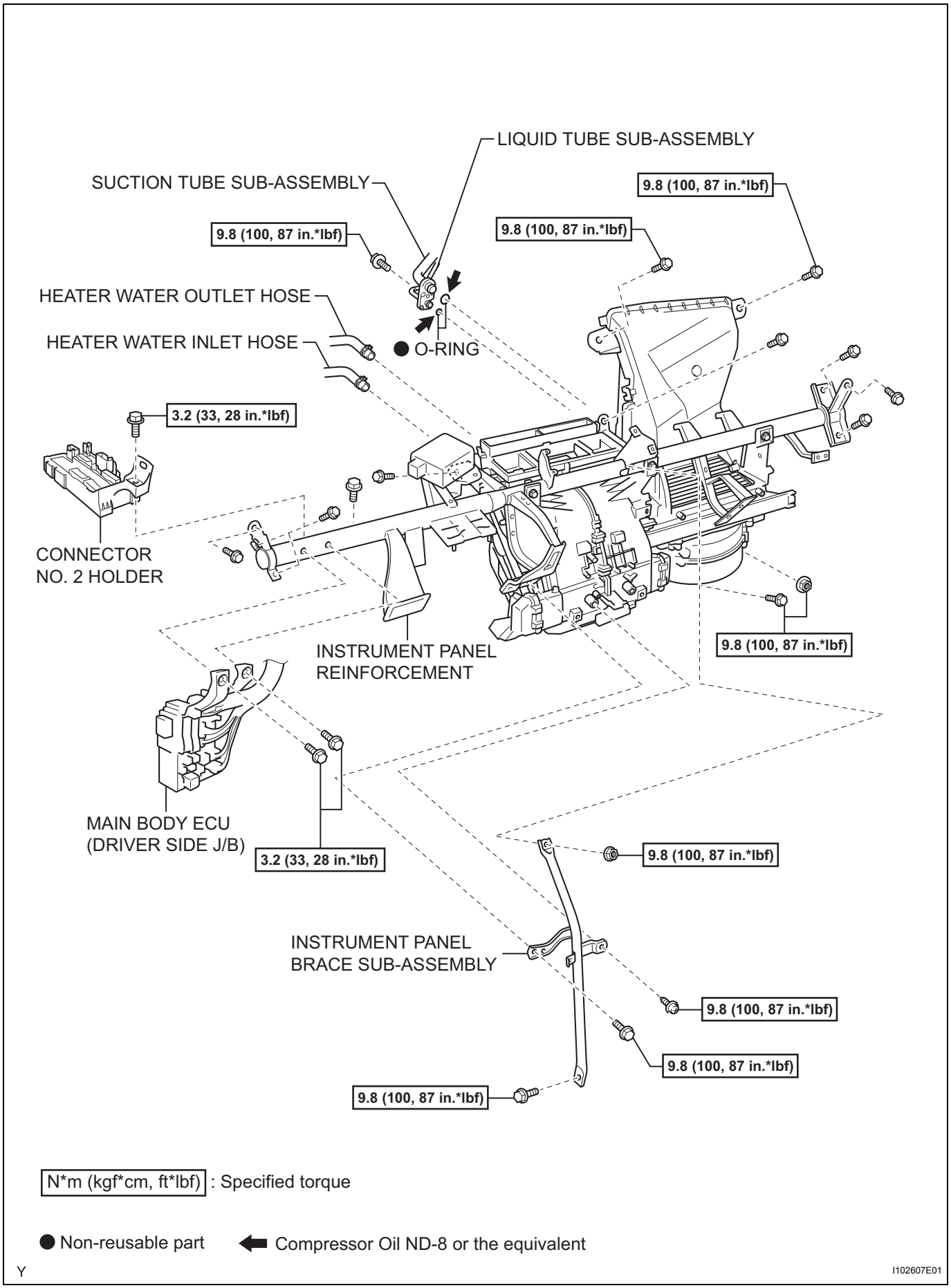
LIQUID TUBE SUB-ASSEMBLY
SUCTION TUBE SUB-ASSEMBLY
9.8 (100, 87 in.*lbf)
9.8 (100, 87 in.*lbf)
9.8 (100, 87 in.*lbf)
HEATER WATER OUTLET HOSE
HEATER WATER INLET HOSE
● O-RING
3.2 (33, 28 in.*lbf)
CONNECTOR
NO. 2 HOLDER
INSTRUMENT PANEL
REINFORCEMENT
9.8 (100, 87 in.*lbf)
MAIN BODY ECU
(DRIVER SIDE J/B)
3.2 (33, 28 in.*lbf)
9.8 (100, 87 in.*lbf)
INSTRUMENT PANEL
BRACE SUB-ASSEMBLY
9.8 (100, 87 in.*lbf)
9.8 (100, 87 in.*lbf)
9.8 (100, 87 in.*lbf)
N*m (kgf*cm, ft*lbf) : Specified torque
● Non-reusable part
Compressor Oil ND-8 or the equivalent
Y
I102607E01

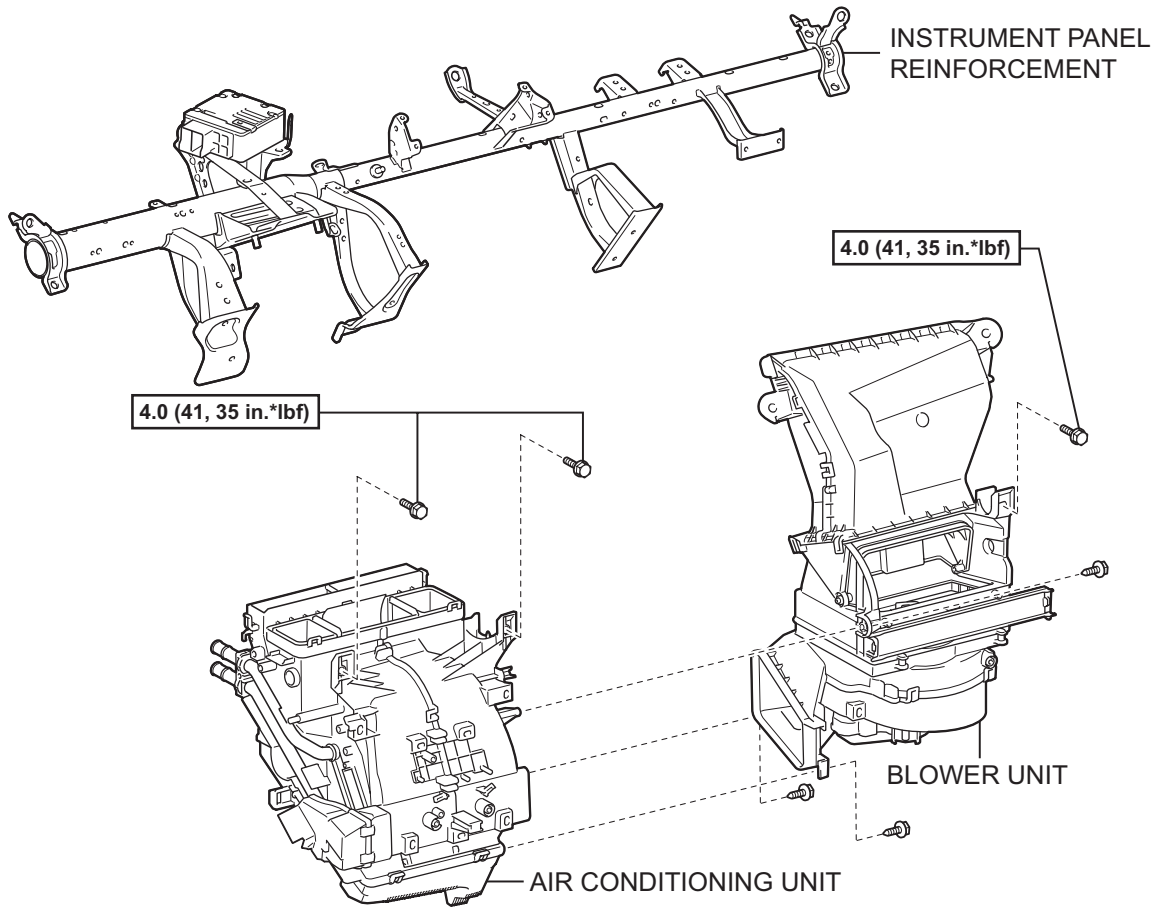

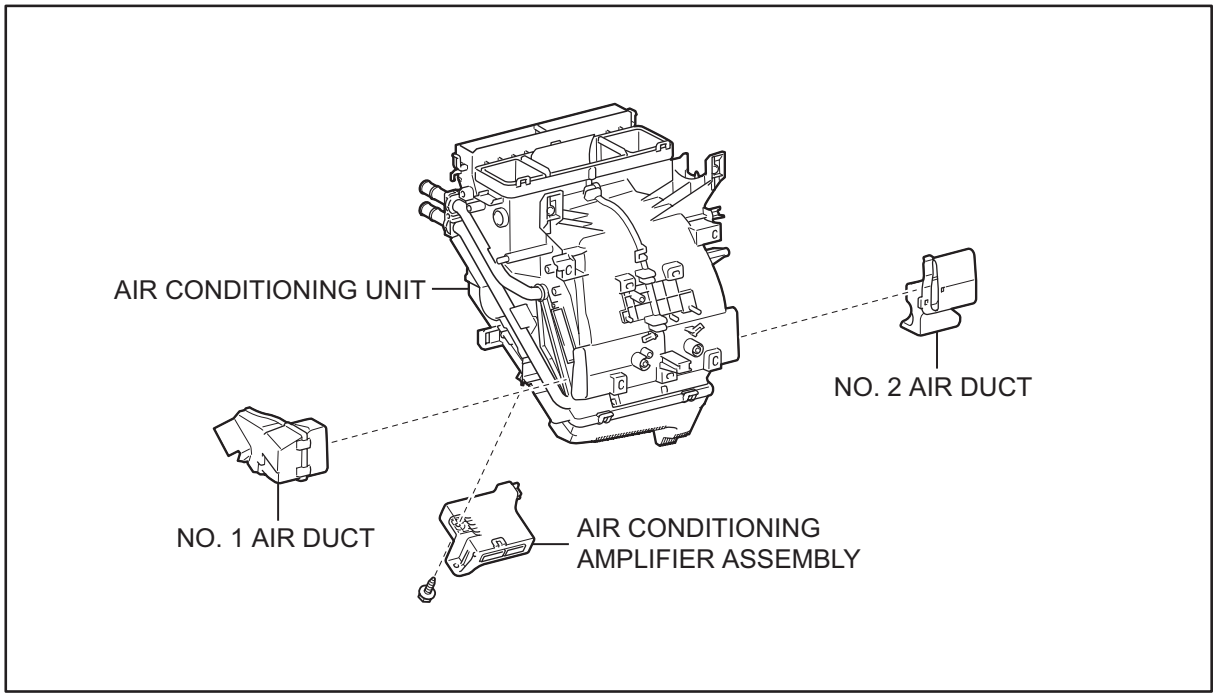

N*m (kgf*cm, ft*lbf) : Specified torque

AC

P

I102605E01

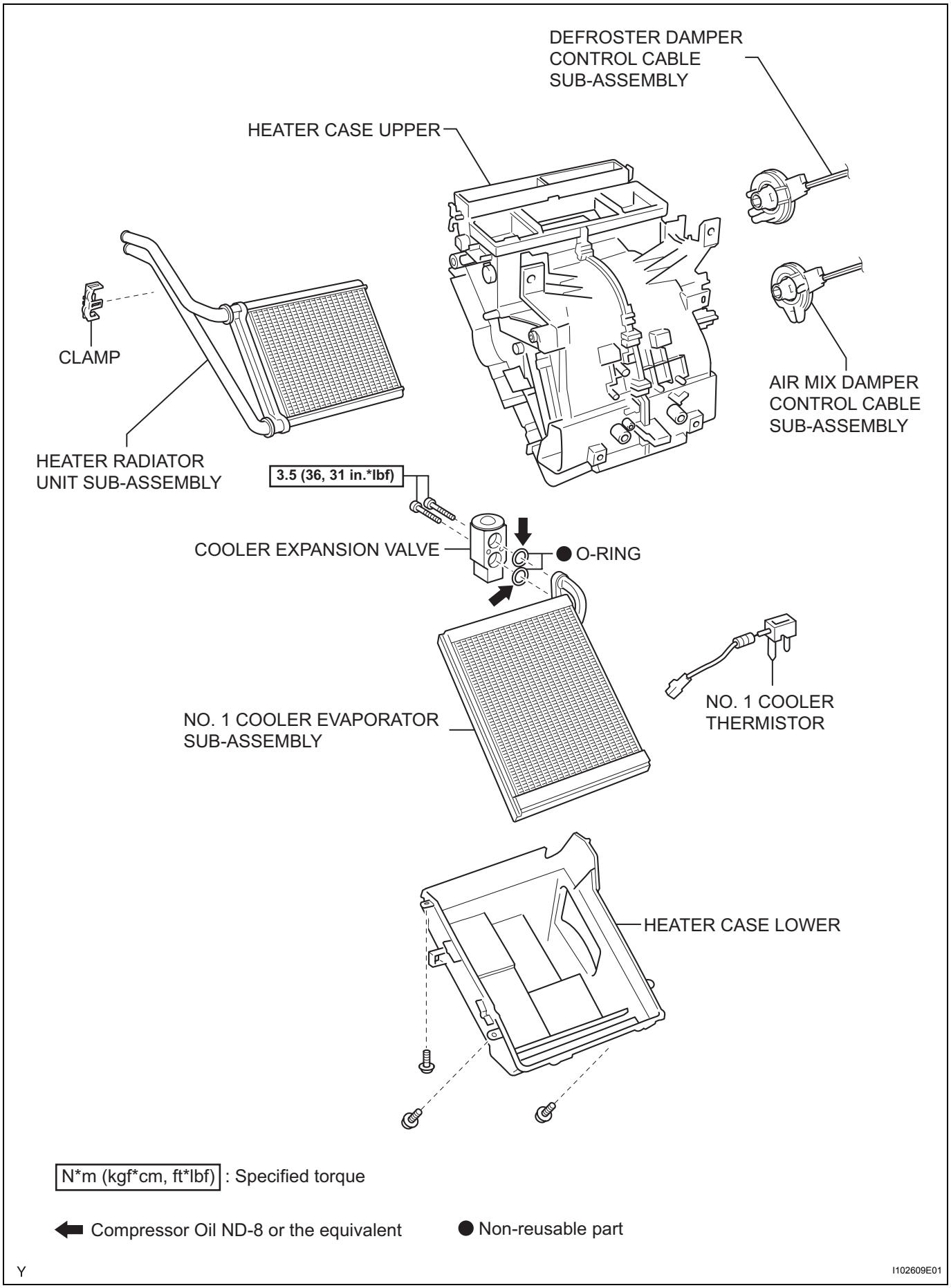
DEFROSTER DAMPER CONTROL CABLE SUB-ASSEMBLY
HEATER CASE UPPER
CLAMP
AIR MIX DAMPER CONTROL CABLE SUB-ASSEMBLY
HEATER RADIATOR UNIT SUB-ASSEMBLY
3.5 (36, 31 in.*lbf)
COOLER EXPANSION VALVE
● O-RING
NO. 1 COOLER EVAPORATOR SUB-ASSEMBLY
NO. 1 COOLER THERMISTOR
HEATER CASE LOWER
N*m (kgf*cm, ft*lbf) : Specified torque
Compressor Oil ND-8 or the equivalent
● Non-reusable part
Y
I102609E01

REMOVAL

CAUTION:
Some of these service operations affect the SRS airbag system. Read the precautionary notices concerning the SRS airbag system before servicing (See page RS-1).
HINT:
Use the same procedure for both the RH and LH sides.

1. **DISCONNECT CABLE FROM NEGATIVE BATTERY TERMINAL**
   Wait for at least 90 seconds after disconnecting the cable to prevent the airbag from working.

2. **DISCHARGE REFRIGERANT FROM REFRIGERATION SYSTEM (See page AC-66)**

3. **DRAIN ENGINE COOLANT (for 1NZ-FE) (See page CO-8)**

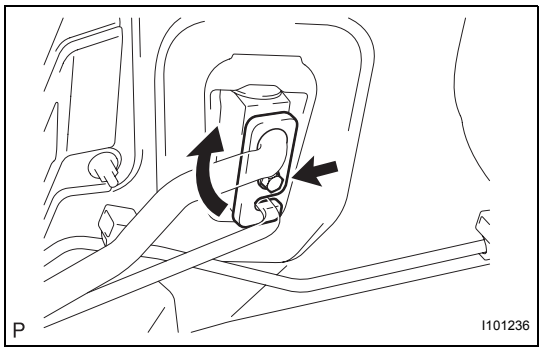

4. **DISCONNECT SUCTION TUBE SUB-ASSEMBLY**
   (a) Remove the bolt.
   (b) Turn the hook type connector clockwise and disconnect the suction tube.
   (c) Remove the O-ring from the suction tube.
   NOTICE:
   Seal the openings of the disconnected parts using vinyl tape to prevent moisture and foreign matter from entering.

5. **DISCONNECT LIQUID TUBE SUB-ASSEMBLY**
   (a) Disconnect the liquid tube.
   (b) Remove the O-ring from the liquid tube.
   NOTICE:
   Seal the openings of the disconnected parts with vinyl tape to prevent moisture and foreign matter from entering.

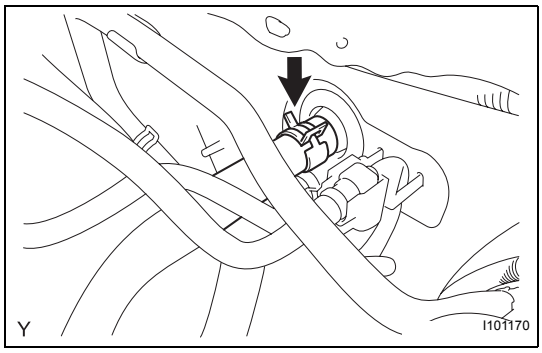

6. **DISCONNECT HEATER WATER OUTLET HOSE**
   (a) Using pliers, grip the claws of the clip, slide the clip and disconnect the heater water outlet hose from the heater unit.

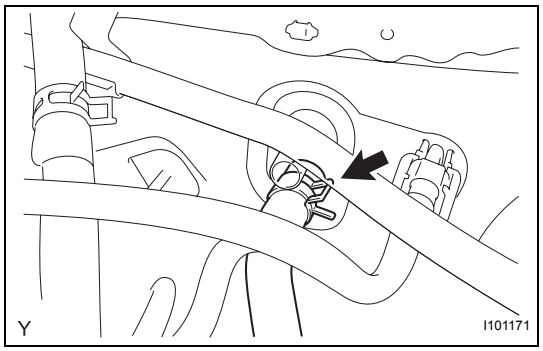

7. **DISCONNECT HEATER WATER INLET HOSE**
   (a) Using pliers, grip the claws of the clip, slide the clip and disconnect the heater water inlet hose from the heater unit.
8. **BOLTS, SCREWS AND NUTS TABLE (See page IP-41)**
9. **REMOVE INSTRUMENT PANEL FINISH PANEL LOWER CENTER (See page ME-138)**
10. **REMOVE INSTRUMENT PANEL FINISH PANEL END LH (See page ME-138)**
11. **REMOVE INSTRUMENT PANEL FINISH PANEL END RH (See page ME-138)**
12. **REMOVE INSTRUMENT CLUSTER FINISH PANEL (See page ME-139)**
13. **REMOVE COMBINATION METER ASSEMBLY (See page ME-139)**
14. **REMOVE INSTRUMENT CLUSTER FINISH PANEL CENTER SUB-ASSEMBLY (See page IP-43)**
15. **REMOVE STEREO OPENING COVER (w/o Radio Receiver) (See page IP-43)**
16. **REMOVE RADIO RECEIVER ASSEMBLY (See page AV-38)**
17. **REMOVE AIR CONDITIONING PANEL ASSEMBLY (See page AC-239)**
18. **DISCONNECT AIR MIX DAMPER CONTROL CABLE SUB-ASSEMBLY (See page AC-240)**
19. **DISCONNECT DEFROSTER DAMPER CONTROL CABLE SUB-ASSEMBLY (See page AC-240)**
20. **DISCONNECT AIR INLET DAMPER CONTROL CABLE SUB-ASSEMBLY (See page AC-240)**
21. **SEPARATE FRONT DOOR OPENING TRIM WEATHERSTRIP RH (See page IP-5)**
22. **SEPARATE FRONT DOOR OPENING TRIM WEATHERSTRIP LH (See page IP-5)**
23. **REMOVE FRONT PILLAR GARNISH RH (See page IR-18)**
24. **REMOVE FRONT PILLAR GARNISH LH (See page IR-19)**
25. **REMOVE GLOVE COMPARTMENT DOOR ASSEMBLY (See page IP-6)**
26. **REMOVE UPPER INSTRUMENT PANEL SUB-ASSEMBLY (See page IP-6)**
27. **REMOVE FRONT DOOR SCUFF PLATE RH (See page IR-14)**
28. **REMOVE FRONT DOOR SCUFF PLATE LH (See page IR-14)**

29. **REMOVE INSTRUMENT PANEL UNDER COVER SUB-ASSEMBLY RH (See page IR-14)**
30. **REMOVE INSTRUMENT PANEL UNDER COVER SUB-ASSEMBLY LH (See page IR-14)**
31. **REMOVE COWL SIDE TRIM BOARD RH (See page IR-15)**
32. **REMOVE COWL SIDE TRIM BOARD LH (See page IR-15)**
33. **REMOVE SHIFT LEVER KNOB SUB-ASSEMBLY (for Manual Transaxle) (See page IP-84)**
34. **REMOVE UPPER CONSOLE PANEL SUB-ASSEMBLY (See page IP-84)**
35. **REMOVE CONSOLE UPPER REAR PANEL SUB-ASSEMBLY (See page IP-84)**
36. **REMOVE CONSOLE BOX CARPET (See page IP-85)**
37. **REMOVE REAR CONSOLE BOX ASSEMBLY (See page IP-85)**
38. **REMOVE INSTRUMENT PAD LOWER LH (See page IP-44)**
39. **REMOVE INSTRUMENT PAD LOWER RH (See page IP-45)**
40. **REMOVE INSTRUMENT PANEL LOWER FINISH PANEL SUB-ASSEMBLY (See page IP-45)**
41. **REMOVE INSTRUMENT PANEL BOX (See page IP-45)**
42. **DISCONNECT ANTENNA CORD SUB-ASSEMBLY (See page IP-46)**
43. **SEPARATE HOOD LOCK CONTROL LEVER SUB-ASSEMBLY (See page IP-46)**
44. **REMOVE LOWER INSTRUMENT PANEL SUB-ASSEMBLY (See page IP-46)**
45. **POSITION FRONT WHEELS FACING STRAIGHT AHEAD**
46. **REMOVE STEERING PAD (See page RS-309)**
47. **REMOVE STEERING WHEEL ASSEMBLY (See page SR-12)**
48. **REMOVE STEERING COLUMN COVER (See page SR-12)**
49. **REMOVE COMBINATION SWITCH ASSEMBLY (See page SR-13)**
50. **DISCONNECT POWER STEERING ECU (See page SR-13)**
51. **REMOVE INSTRUMENT PANEL SUB REINFORCEMENT (See page SR-14)**

52. REMOVE COLUMN HOLE COVER SILENCER SHEET (See page SR-14)

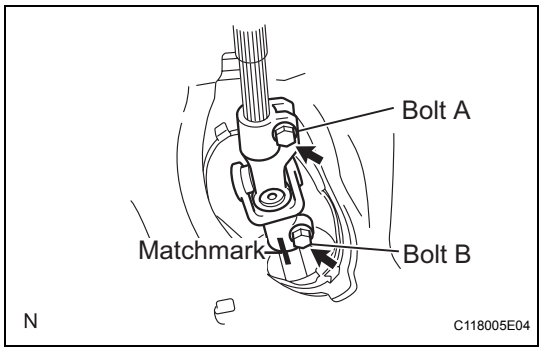

53. SEPARATE STEERING SLIDING YOKE SUB-ASSEMBLY

(a) Place matchmarks on the sliding yoke of the steering intermediate shaft and the power steering link.

(b) Loosen bolt A, remove bolt B and remove the steering yoke.

54. REMOVE BRAKE PEDAL (for Automatic Transaxle) (See page SR-14)

55. REMOVE BRAKE MASTER CYLINDER PUSH ROD CLEVIS (for Manual Transaxle) (See page BR-20)

56. REMOVE BRAKE PEDAL SUPPORT SUB-ASSEMBLY (for Manual Transaxle) (See page BR-21)

57. REMOVE STEERING COLUMN ASSEMBLY (See page SR-15)

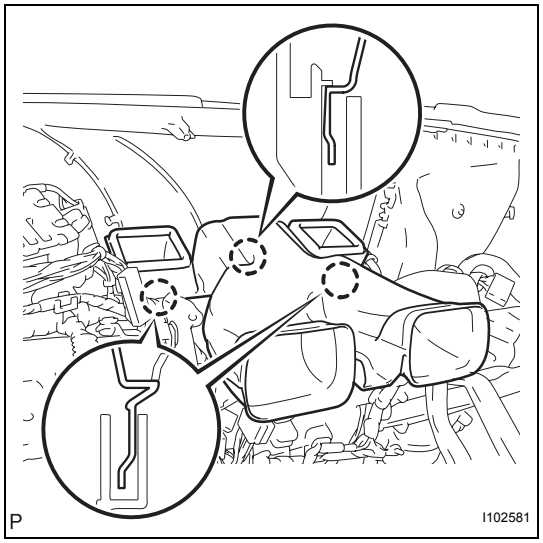

58. REMOVE HEATER TO REGISTER DUCT ASSEMBLY

(a) Disengage the 3 claws and remove the heater to register duct.

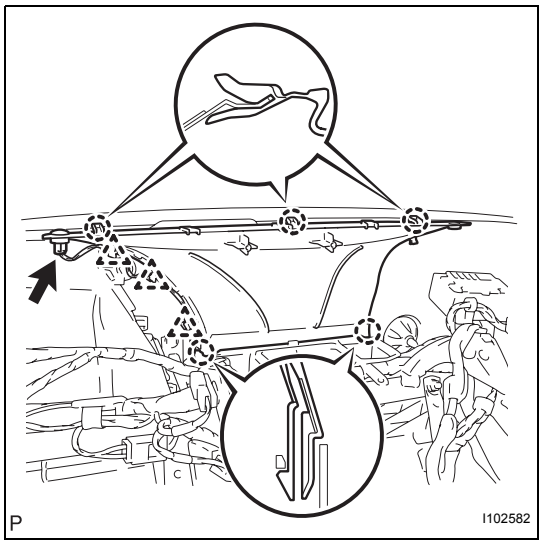

59. REMOVE DEFROSTER NOZZLE ASSEMBLY

(a) Disconnect the connector and 3 clamps.

(b) Disengage the 5 claws and remove the defroster nozzle.

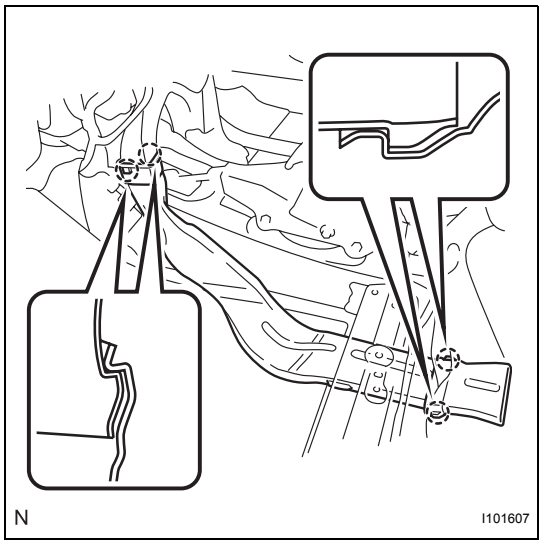

60. REMOVE REAR NO. 2 AIR DUCT (for Cold Area Specification Vehicles)

(a) Disengage the 4 claws and remove the air duct.

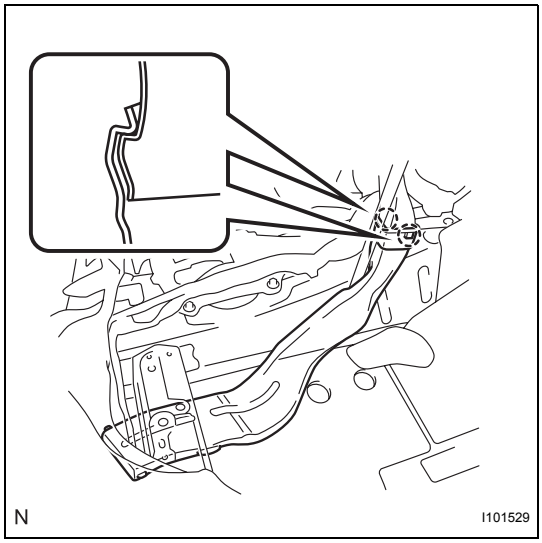

61. REMOVE REAR NO. 1 AIR DUCT (for Cold Area Specification Vehicles)

(a) Disengage the 2 claws and remove the air duct.

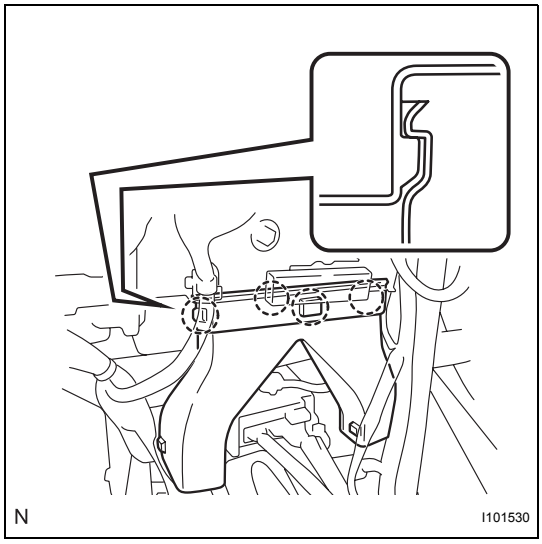

62. REMOVE REAR NO. 3 AIR DUCT (for Cold Area Specification Vehicles)

(a) Disengage the 4 claws and remove the air duct.

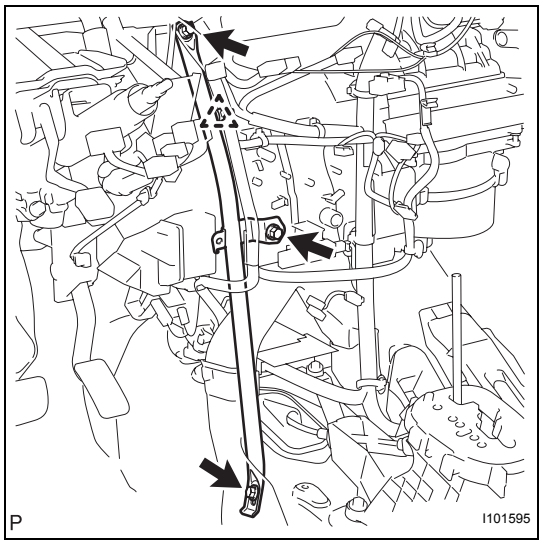

63. REMOVE INSTRUMENT PANEL BRACE SUB-ASSEMBLY

(a) Disengage the clamp.

(b) Remove the bolt, screw and nut and remove the instrument panel brace.

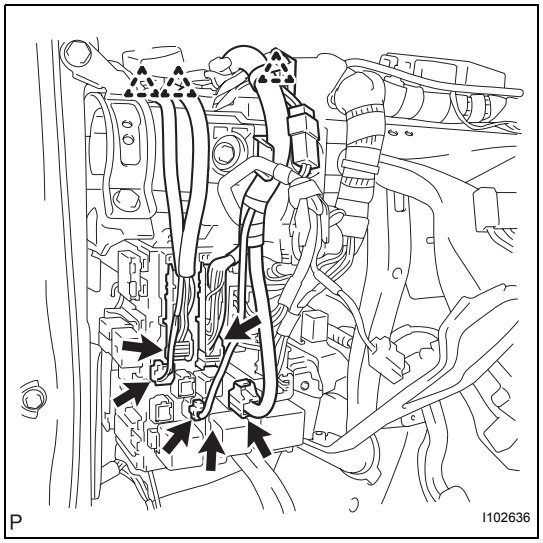

64. SEPARATE MAIN BODY ECU (DRIVER SIDE J/B)

(a) Disconnect the 5 connectors and the 3 clamps.

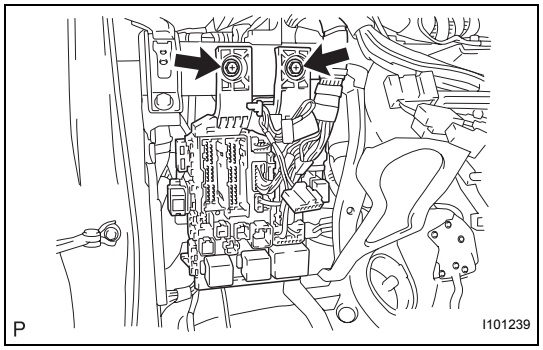

(b) Remove the 2 bolts and separate the main body ECU.

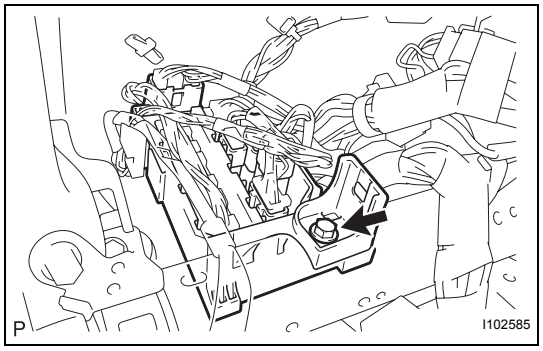

65. SEPARATE CONNECTOR NO. 2 HOLDER

(a) Remove the bolt.

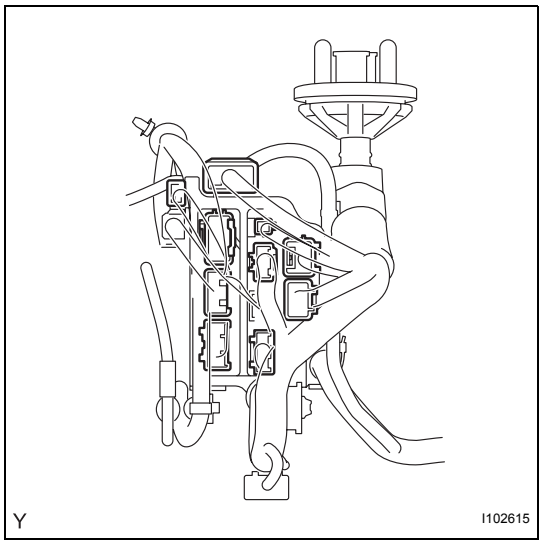

(b) Disconnect the connectors and separate the connector No. 2 holder.

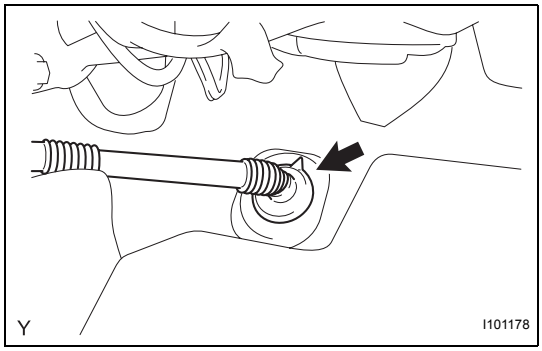

66. REMOVE INSTRUMENT PANEL REINFORCEMENT

(a) Disconnect the drain hose.

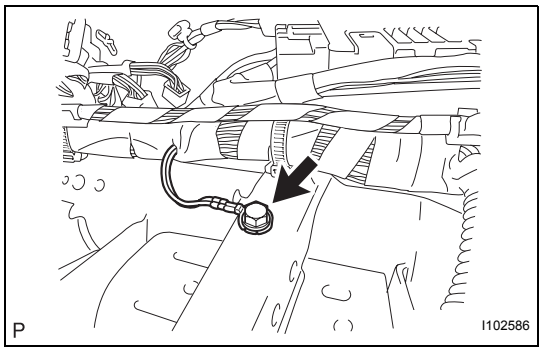

(b) Remove the bolt and disconnect the ground wire.

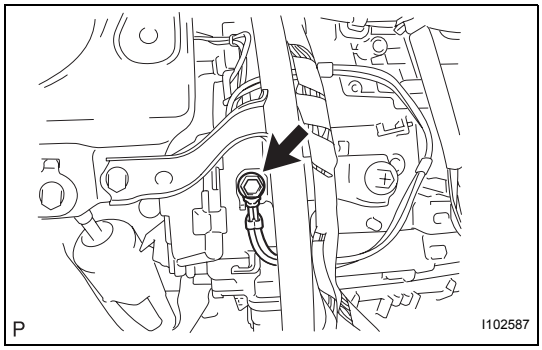

(c) Remove the bolt and disconnect the ground wire. (for Cold area specification vehicles)

(d) Disconnect the connectors.

(e) Disengage the clamps.

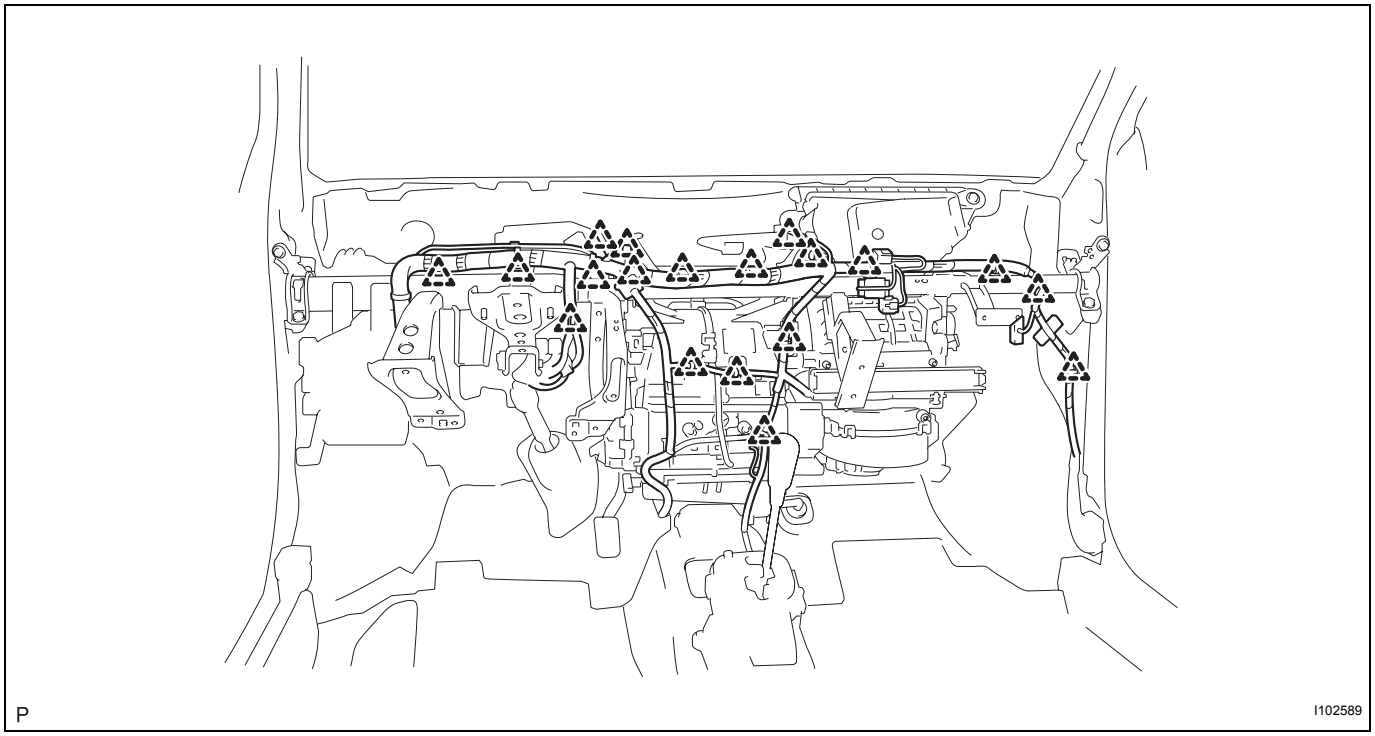

(f) Disconnect the connectors and clamps.

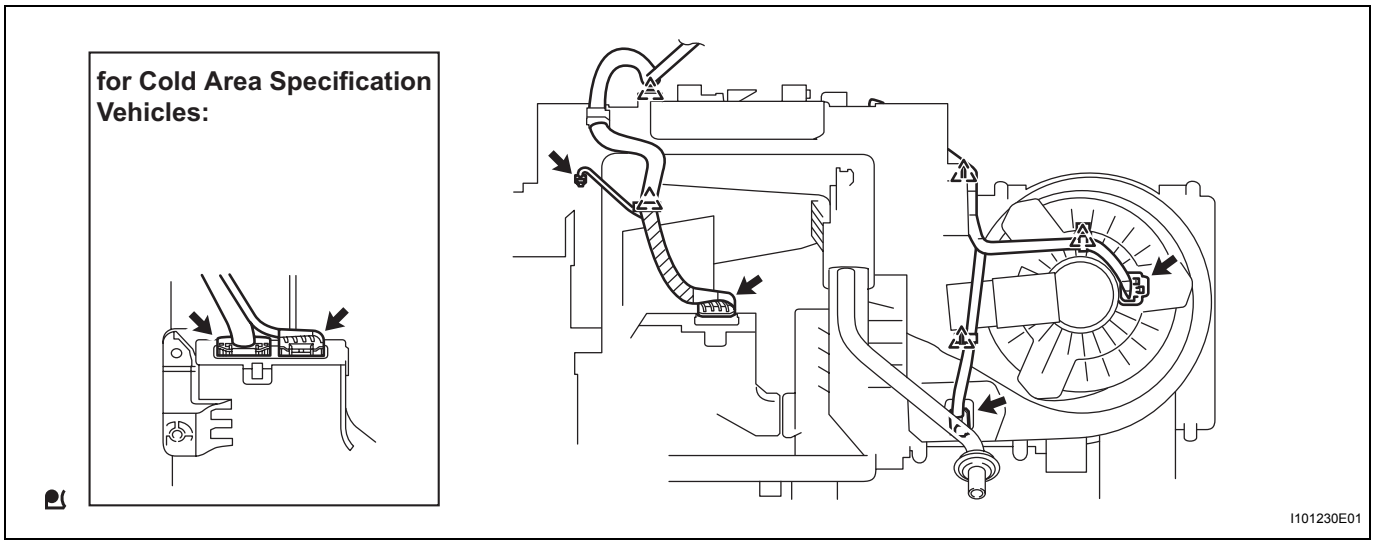

(g) Remove the 3 bolts and the nut.

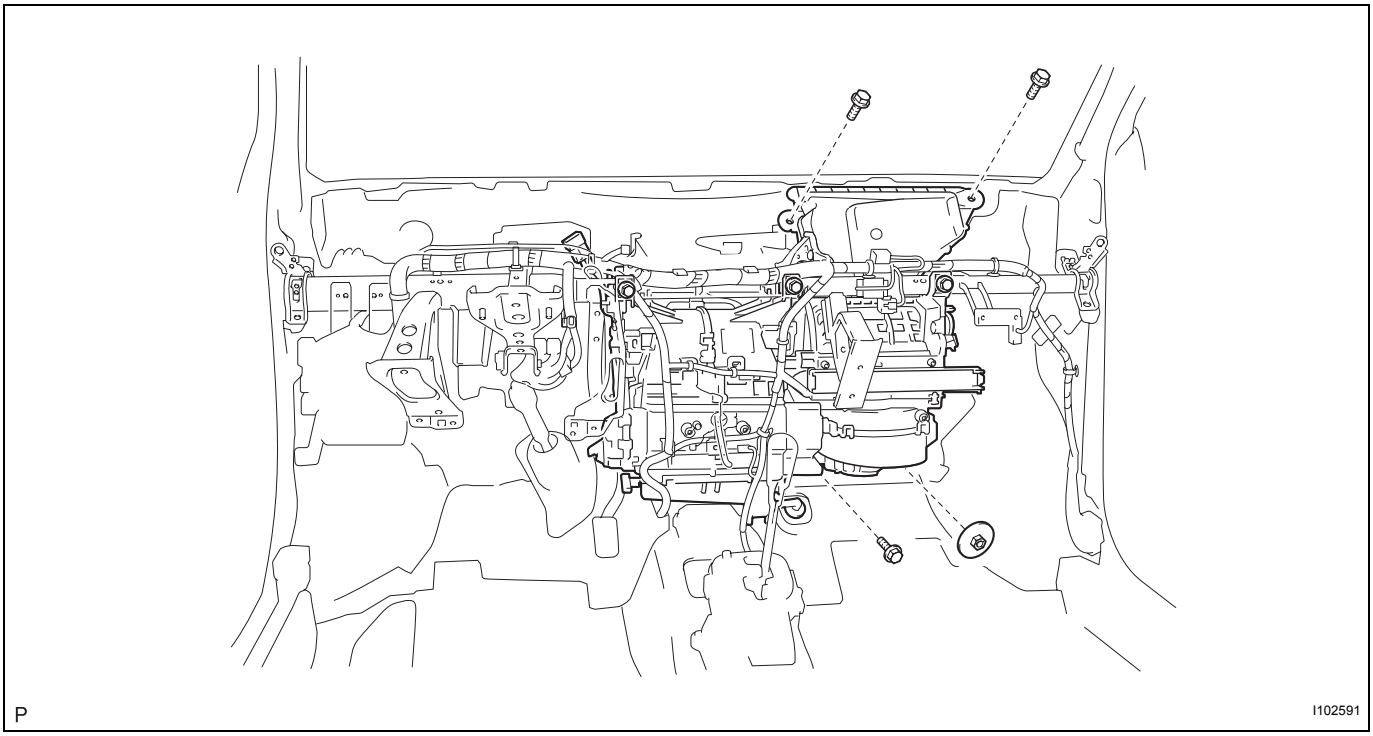

(h) Remove the 9 bolts and remove the instrument panel reinforcement together with the air conditioning unit.

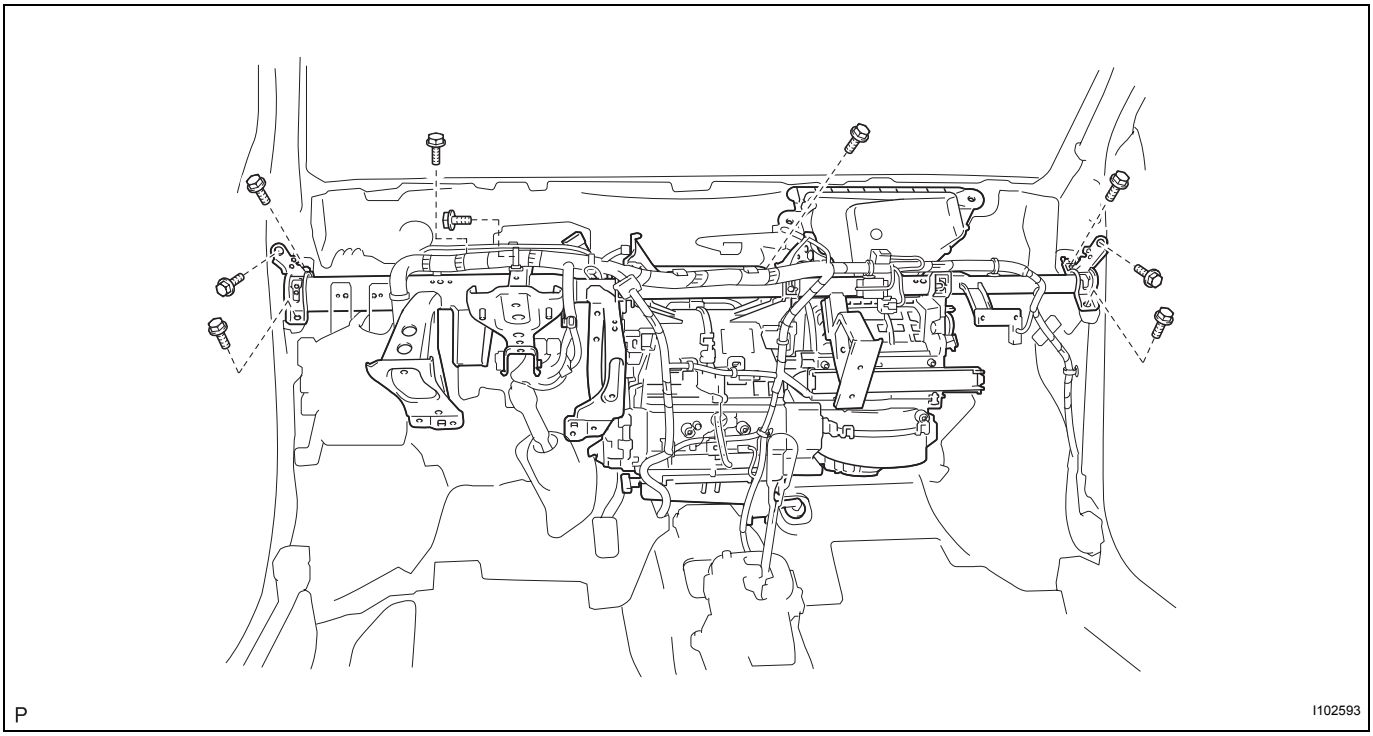

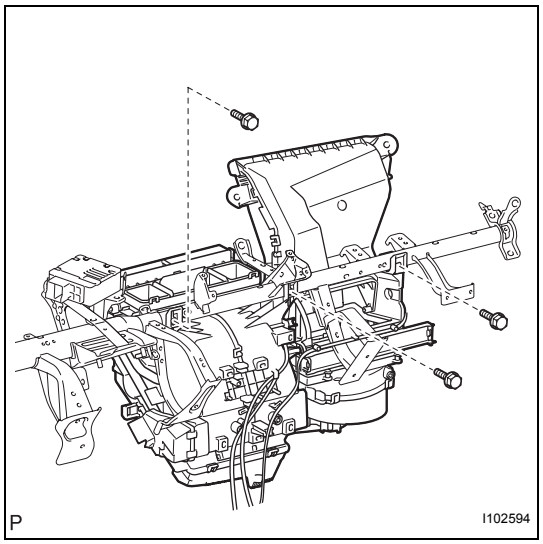

(i) Remove the 3 screws and the air conditioning unit.

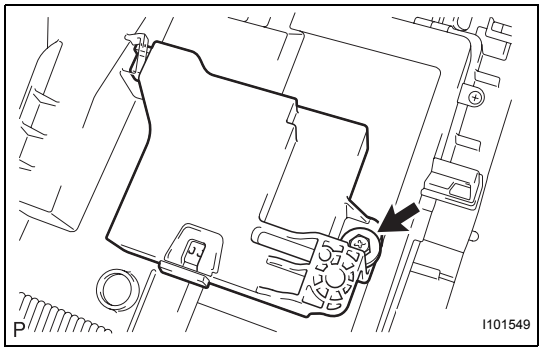

67. REMOVE AIR CONDITIONING AMPLIFIER ASSEMBLY

(a) Remove the screw and the air conditioning amplifier.

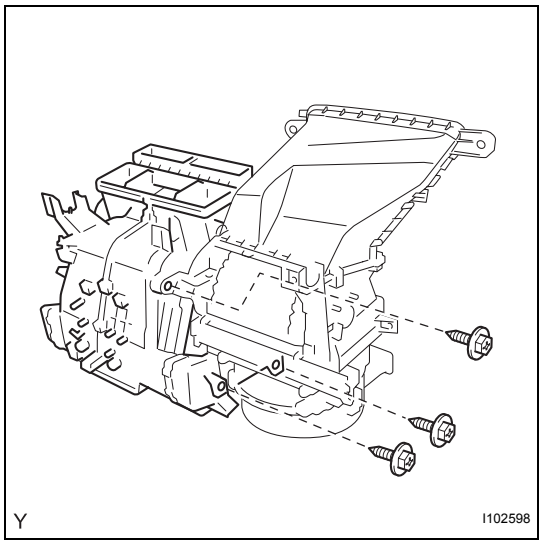

68. REMOVE AIR CONDITIONING UNIT

(a) Remove the 3 screws and the air conditioning unit.

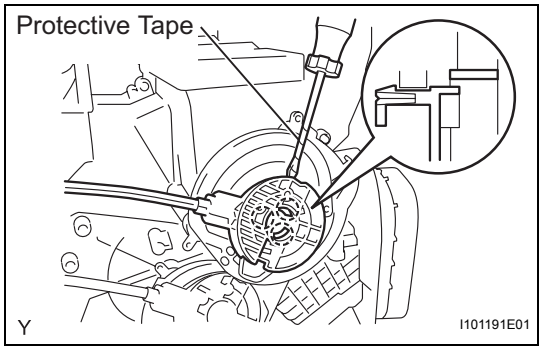

DISASSEMBLY

1. REMOVE DEFROSTER DAMPER CONTROL CABLE SUB-ASSEMBLY

(a) Using a screwdriver with its tip wrapped in protective tape, disengage the claw and remove the defroster damper control cable.

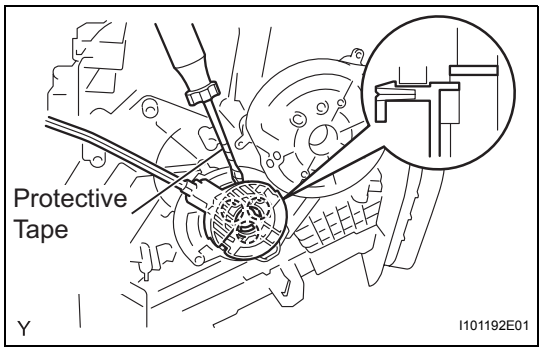

2. REMOVE AIR MIX DAMPER CONTROL CABLE SUB-ASSEMBLY

(a) Using a screwdriver with its tip wrapped in protective tape, disengage the claw and remove the air mix damper control cable.

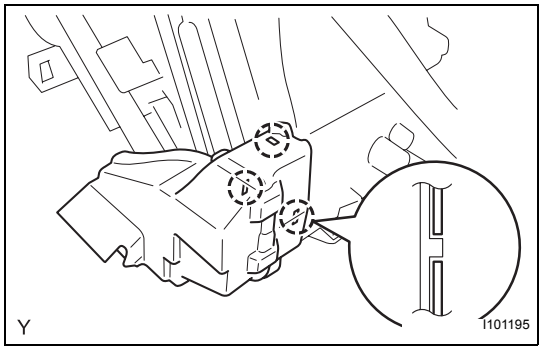

3. REMOVE NO. 1 AIR DUCT

(a) Disengage the 3 claws and remove the air duct.

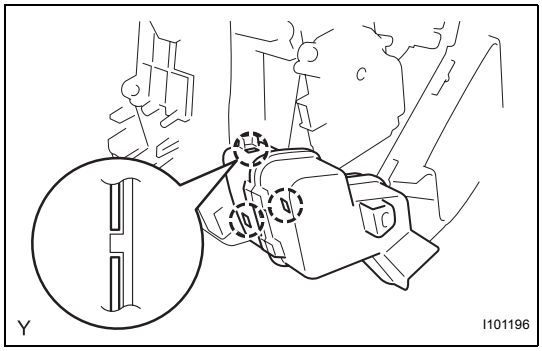

4. REMOVE NO. 2 AIR DUCT

(a) Disengage the 3 claws and remove the air duct.

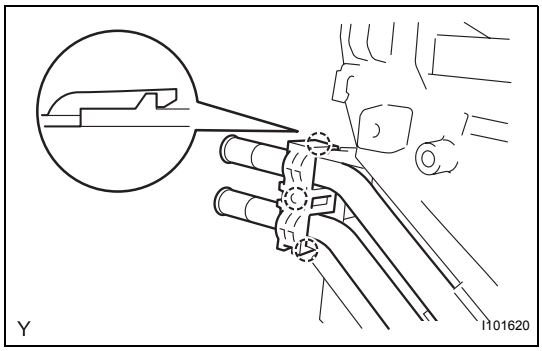

5. REMOVE HEATER RADIATOR UNIT SUB-ASSEMBLY

(a) Disengage the 3 claws and remove the clamp.

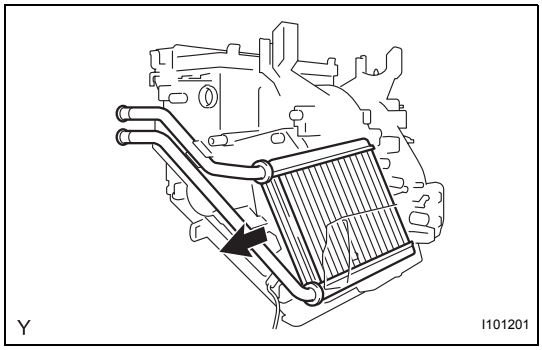

(b) Remove the heater radiator unit from the air conditioner radiator assembly.

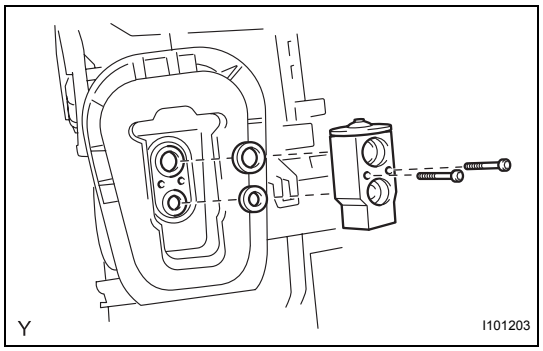

6. REMOVE COOLER EXPANSION VALVE

(a) Using a hexagon wrench 4, remove the 2 hexagon bolts and detach the cooler expansion valve.

(b) Remove the 2 O-rings from the No. 1 cooler evaporator.

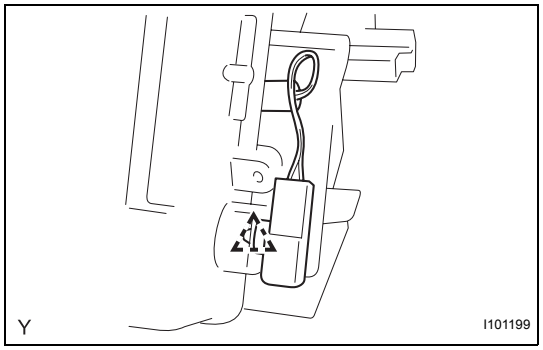

7. REMOVE NO. 1 COOLER EVAPORATOR SUB-ASSEMBLY

(a) Disengage the cooler thermistor connector.

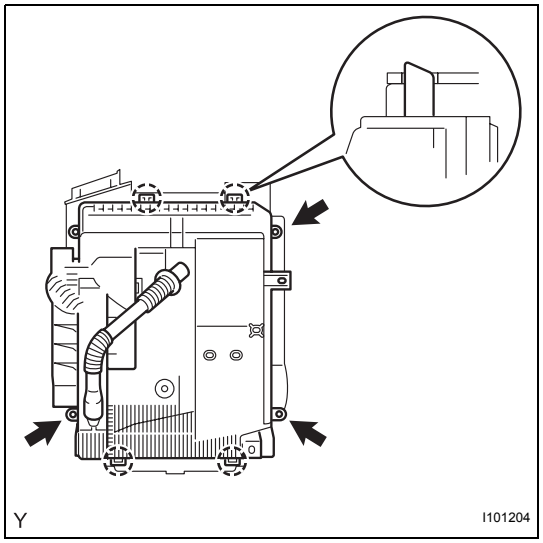

(b) Remove the 3 screws.

(c) Disengage the 4 claws and remove the heater case lower.

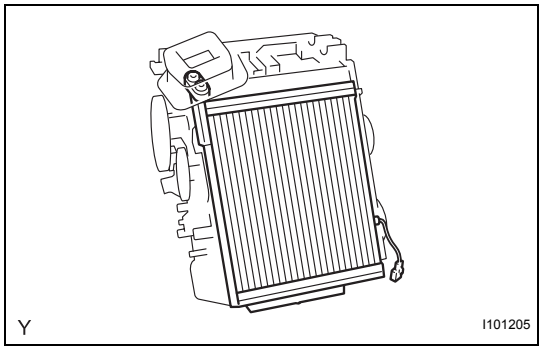

(d) Remove the cooler evaporator.

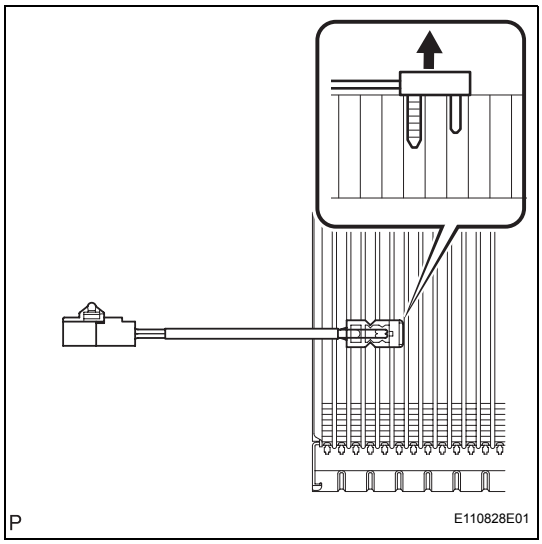

8. REMOVE NO. 1 COOLER THERMISTOR

(a) Remove the cooler thermistor from the cooler evaporator.

INSPECTION

1. INSPECT NO. 1 COOLER THERMISTOR

(a) Measure the resistance.

Standard resistance

Tester Connection	Condition	Specified Condition
1 - 2	-10°C (14°F)	7.30 to 9.10 kΩ
1 - 2	-5°C (23°F)	5.65 to 6.95 kΩ
1 - 2	0°C (32°F)	4.40 to 5.35 kΩ
1 - 2	5°C (41°F)	3.40 to 4.15 kΩ
1 - 2	10°C (50°F)	2.70 to 3.25 kΩ
1 - 2	15°C (59°F)	2.14 to 2.58 kΩ
1 - 2	20°C (68°F)	1.71 to 2.05 kΩ
1 - 2	25°C (77°F)	1.38 to 1.64 kΩ
1 - 2	30°C (86°F)	1.11 to 1.32 kΩ

NOTICE:

- **Touching the sensor even slightly may change the resistance value. Hold the connector of the sensor.**
- **When measuring the resistance, the temperature of the sensor and the cooler thermistor must be the same.**

HINT:

As the temperature increases, the resistance decreases (see the graph).

If the operation is not as specified, replace the cooler thermistor.

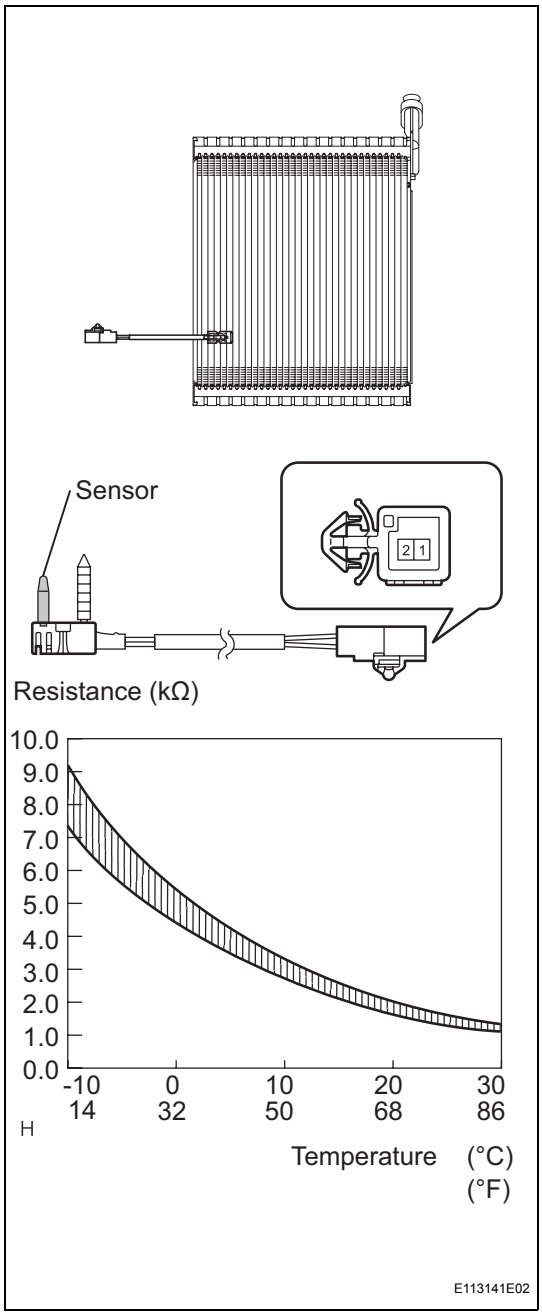

REASSEMBLY

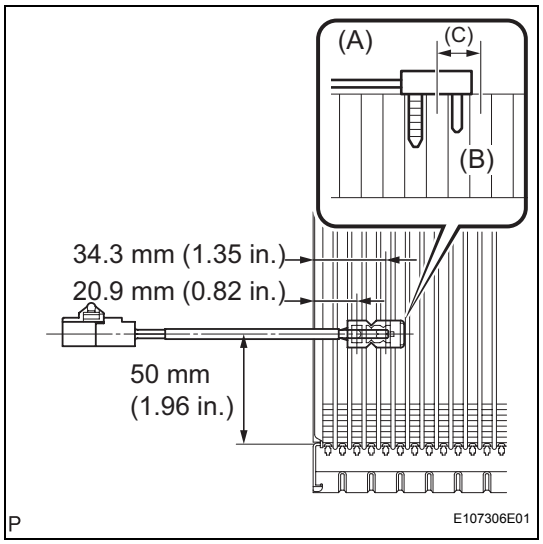

1. INSTALL NO. 1 COOLER THERMISTOR

(a) Install the sensor onto the evaporator as shown in the illustration.

(b) Check that the sensor sticks to the evaporator surface as shown in the illustration (A: Sensor, B: Evaporator).

NOTICE:

If reusing the evaporator, do not reinsert the sensor in the same position that it was in before. Insert it within area C, shown in the illustration.

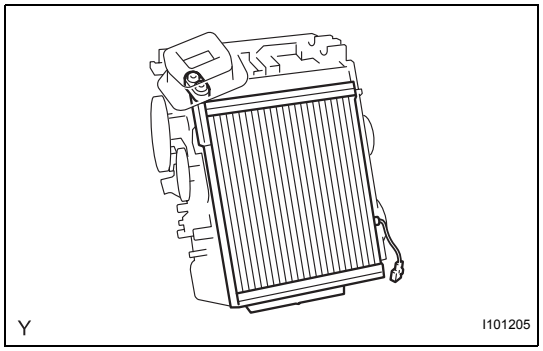

2. INSTALL NO. 1 COOLER EVAPORATOR SUB-ASSEMBLY

HINT:

If a new cooler evaporator is installed, add compressor oil to the cooler evaporator as follows.

Compressor oil:

ND-OIL8 or the equivalent. Add 40 cc (1.35 fl. oz.)

(a) Install the cooler evaporator.

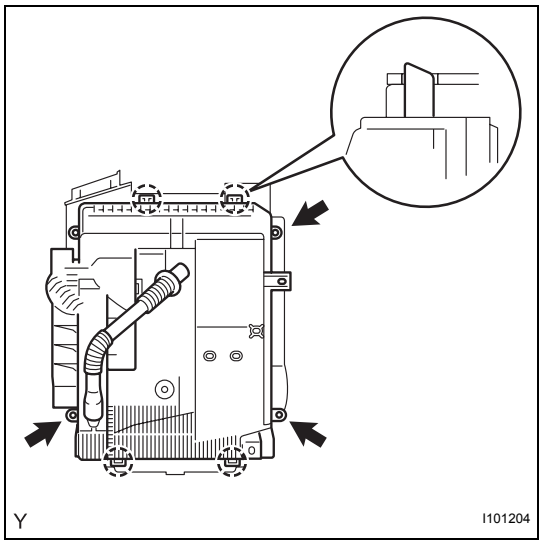

(b) Engage the 4 claws and install the heater case lower.

(c) Install the 3 screws.

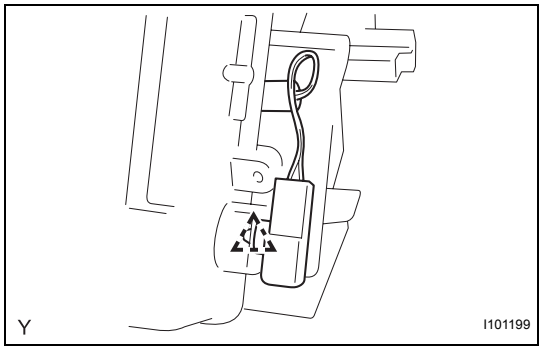

(d) Engage the cooler thermistor connector.

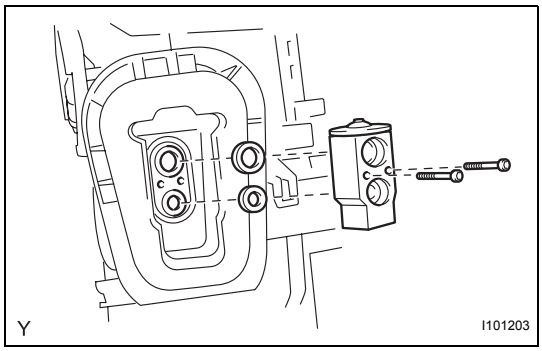

3. INSTALL COOLER EXPANSION VALVE

(a) Apply sufficient compressor oil (ND-OIL8) to 2 new O-rings and the fitting surface of the cooler expansion valve.
Compressor oil:
ND-OIL8 or the equivalent

(b) Install the 2 O-rings onto the cooler evaporator.

(c) Using a hexagon wrench 4, install the cooler expansion valve with the 2 hexagon bolts.
Torque: 3.5 N*m (36 kgf*cm, 31 in.*lbf)

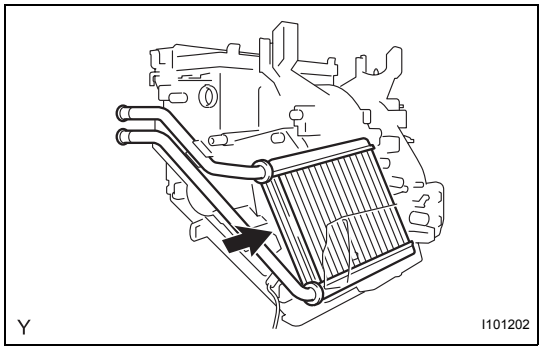

4. INSTALL HEATER RADIATOR UNIT SUB-ASSEMBLY

(a) Install the heater radiator unit onto the air conditioner radiator assembly.

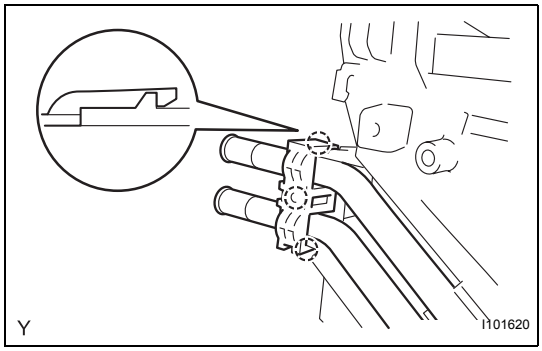

(b) Engage the 3 clips and install the clamp.

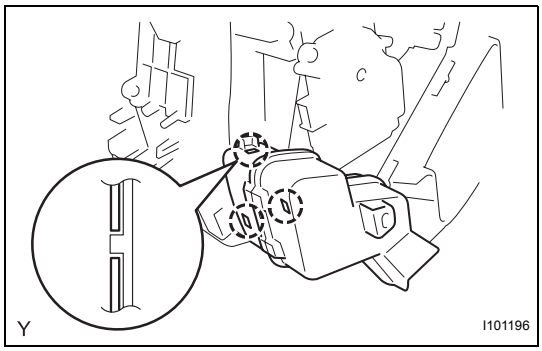

5. INSTALL NO. 2 AIR DUCT

(a) Engage the 3 claws and install the air duct.

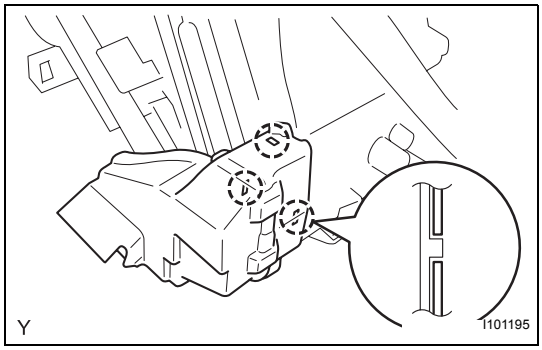

6. INSTALL NO. 1 AIR DUCT

(a) Engage the 3 claws and install the air duct.

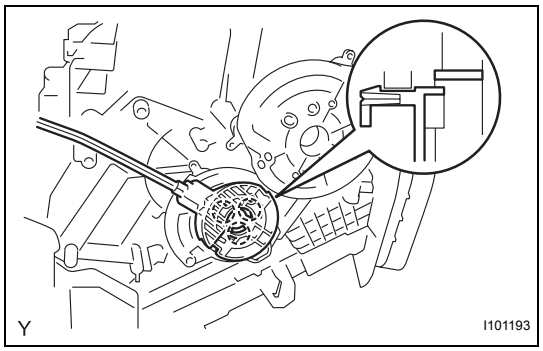

7. INSTALL AIR MIX DAMPER CONTROL CABLE SUB-ASSEMBLY

(a) Engage the claw and install the air mix damper control cable.

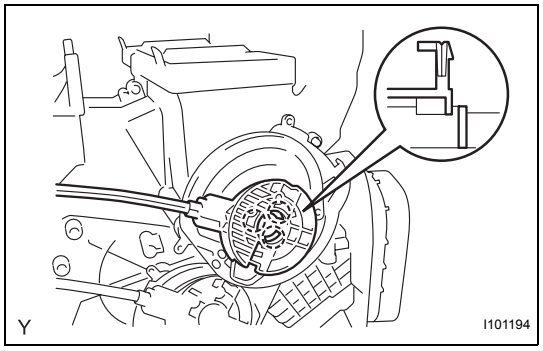

8. INSTALL DEFROSTER DAMPER CONTROL CABLE SUB-ASSEMBLY

(a) Engage the claw and install the defroster damper control cable.

INSTALLATION

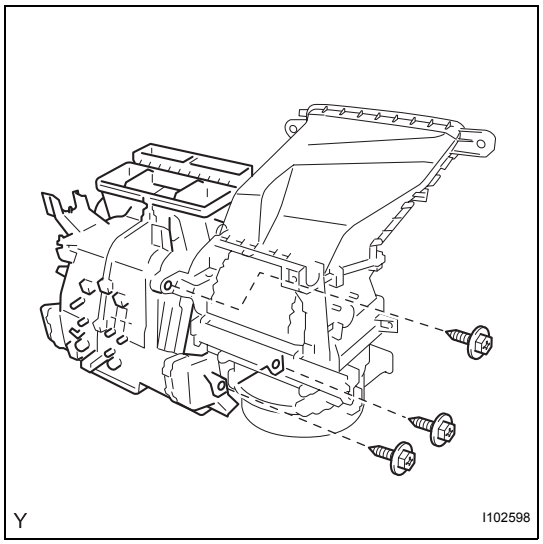

1. INSTALL AIR CONDITIONING UNIT

(a) Install the air conditioning unit with the 3 screws.

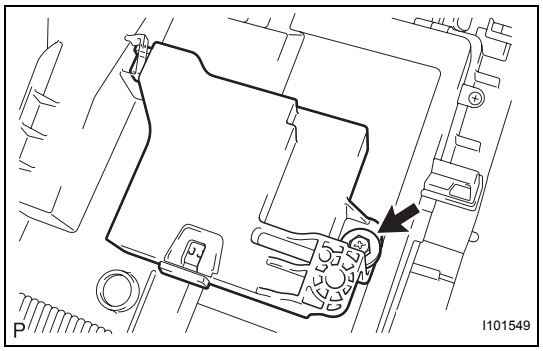

2. INSTALL AIR CONDITIONING AMPLIFIER ASSEMBLY

(a) Install the air conditioning amplifier with the screw.

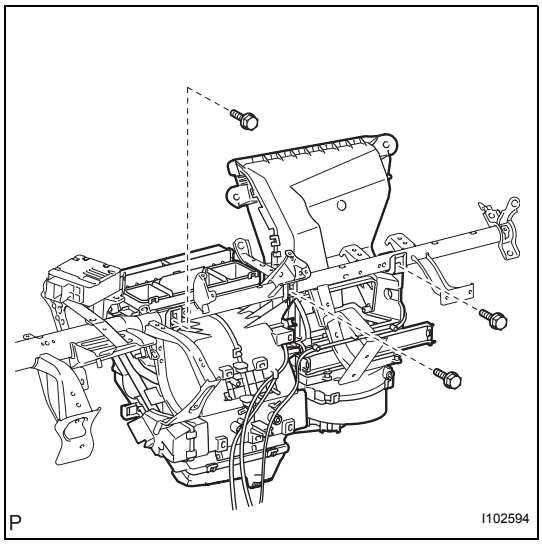

3. INSTALL INSTRUMENT PANEL REINFORCEMENT

(a) Provisionally tighten the air conditioning unit with the 3 screws.

(b) Install the instrument panel reinforcement and the air conditioning unit with the 9 bolts.

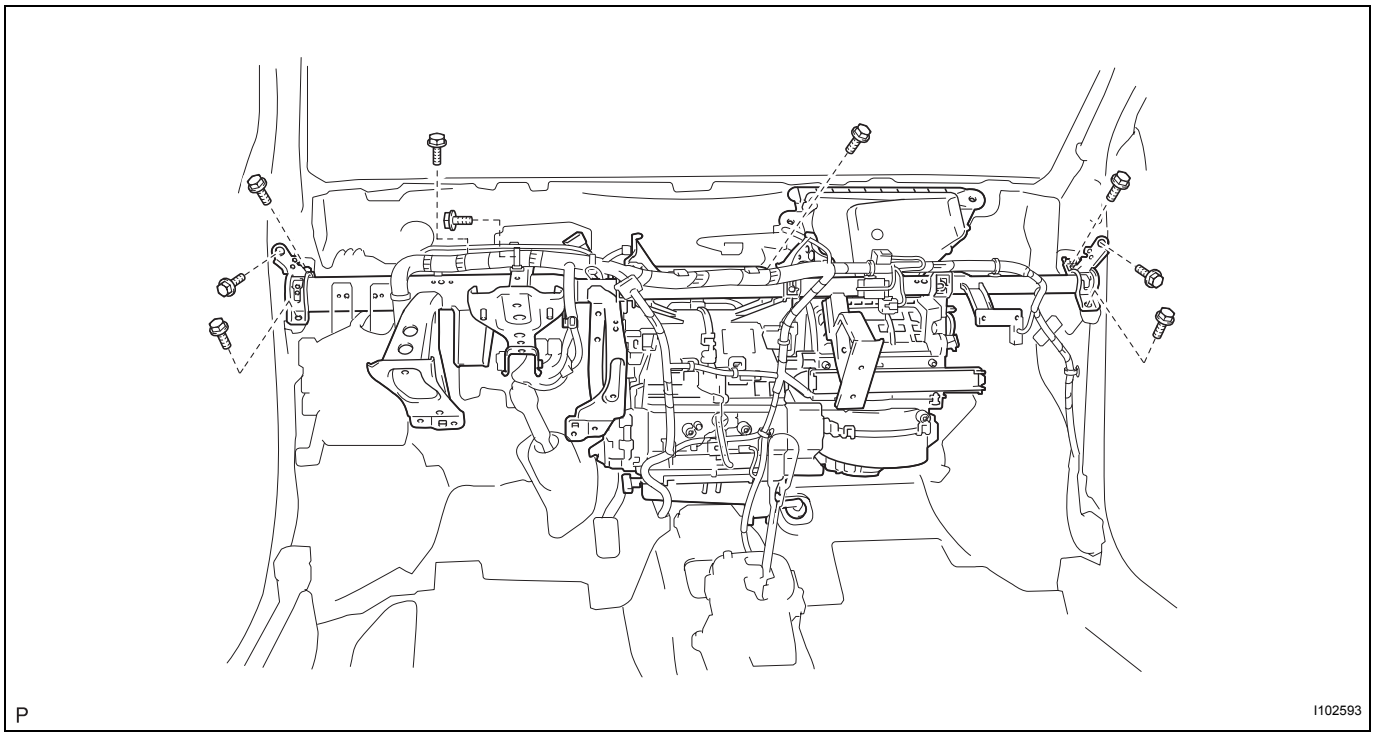

(c) Install the 3 screws, 3 bolts and the nut in the sequence shown in the illustration.
Torque: 4.0 N*m (41 kgf*cm, 35 in.*lbf) for screw
9.8 N*m (100 kgf*cm, 87 in.*lbf) for nut
9.8 N*m (100 kgf*cm, 87 in.*lbf) for bolt

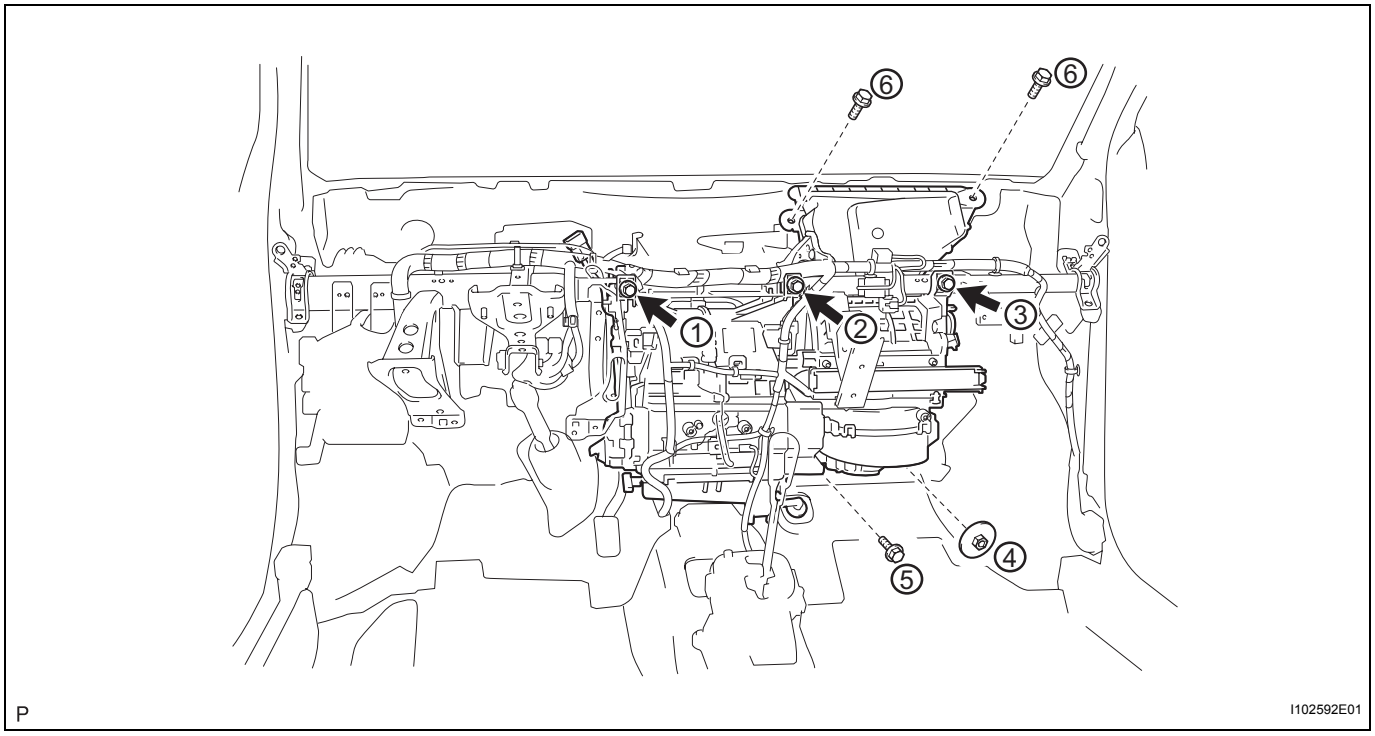

(d) Install the wire harness with the clamps and connect the connectors.

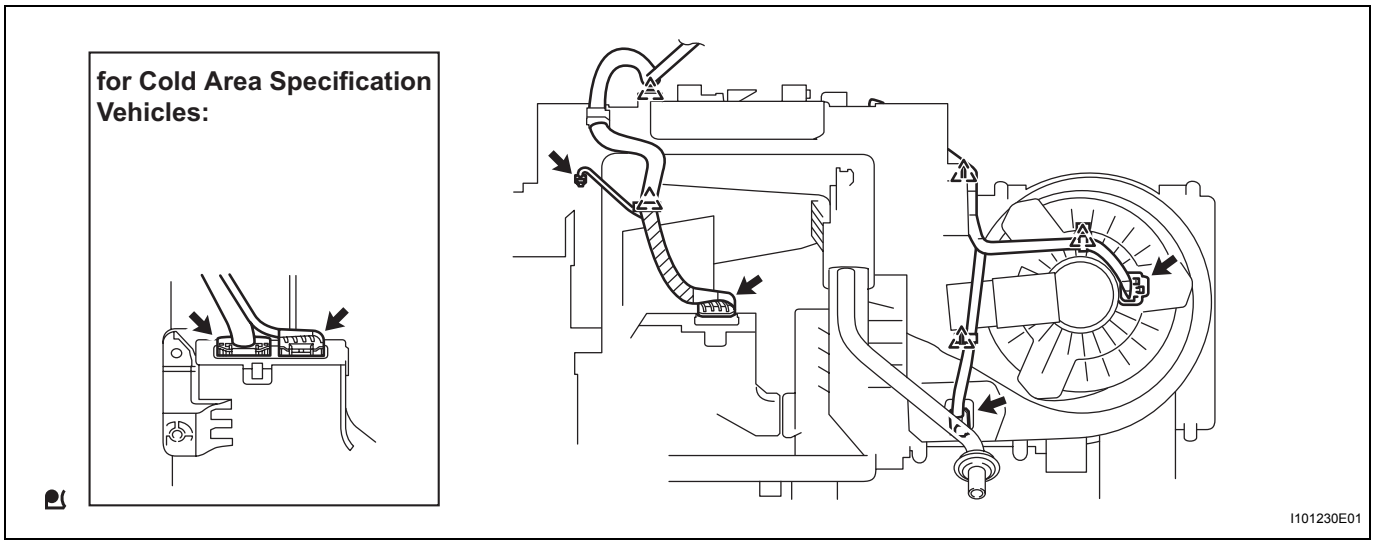

(e) Engage the clamps.

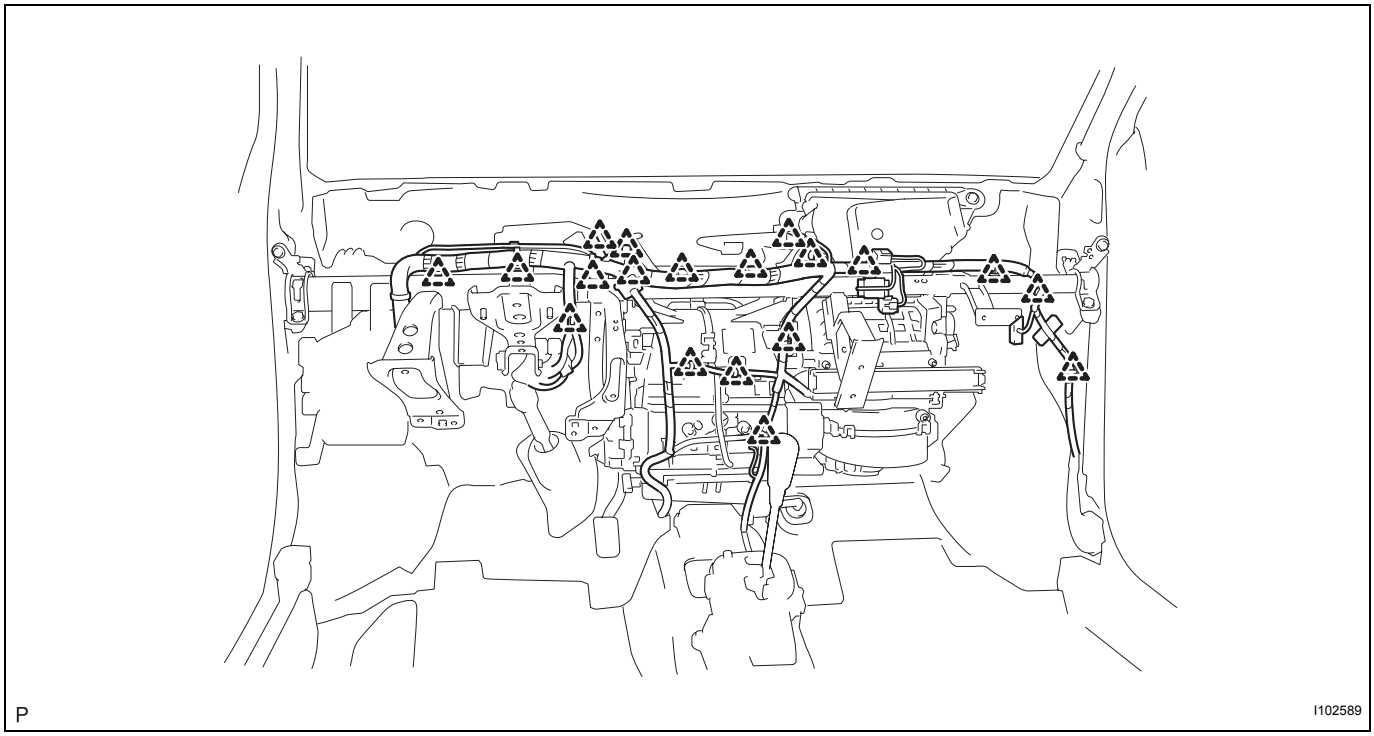

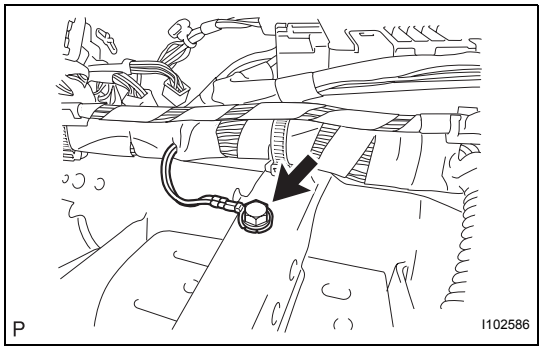

(f) Install the ground wire with the bolt.
Torque: 3.2 N*m (33 kgf*cm, 28 in.*lbf)

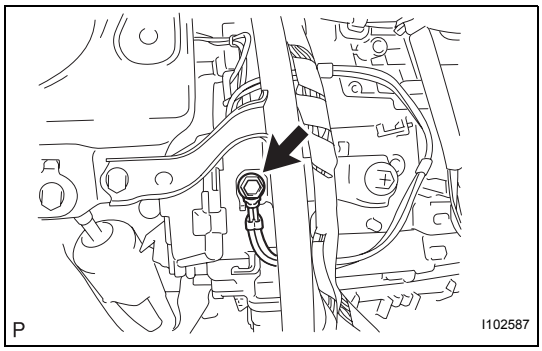

(g) Install the ground wire with the bolt. (for Cold area specification vehicles)
Torque: 8.0 N*m (82 kgf*cm, 71 in.*lbf)

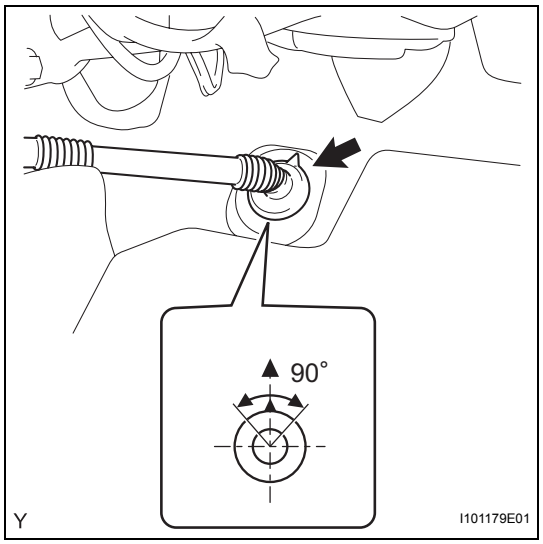

(h) Install the drain hose into the position shown in the illustration.
NOTICE:
- **Install the drain hose with its UP mark facing upward, within the 90 degree range shown in the illustration.**
- **Install the drain hose without twisting it.**

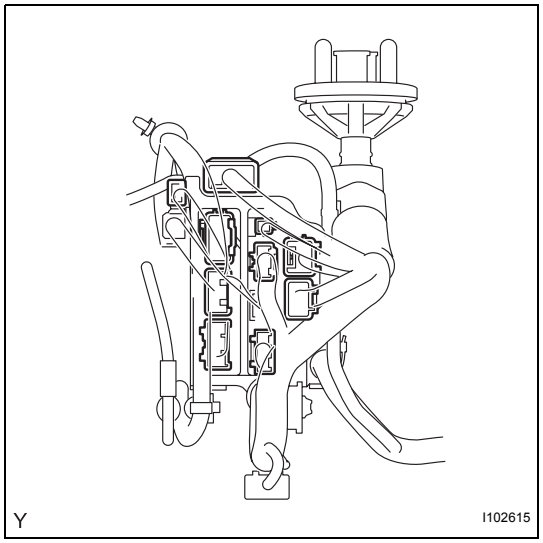

4. INSTALL CONNECTOR NO. 2 HOLDER

(a) Connect the connectors and install the wire harness.

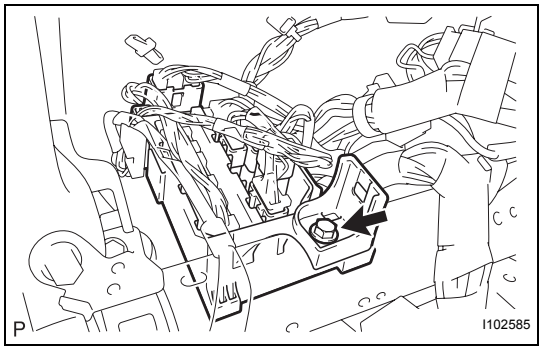

(b) Install the connector holder with the bolt.
Torque: 3.2 N*m (33 kgf*cm, 28 in.*lbf)

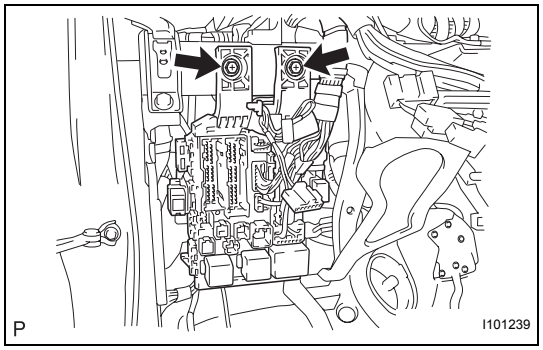

5. INSTALL MAIN BODY ECU (DRIVER SIDE J/B)

(a) Install the main body ECU with the 2 bolts.
Torque: 3.2 N*m (33 kgf*cm, 28 in.*lbf)

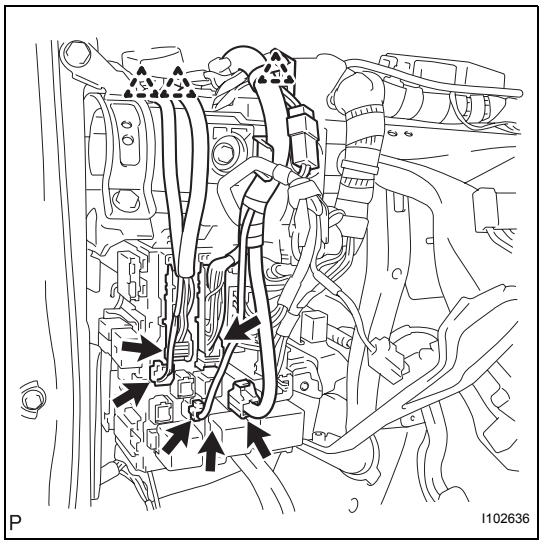

(b) Connect the 5 connectors and the 3 clamps.

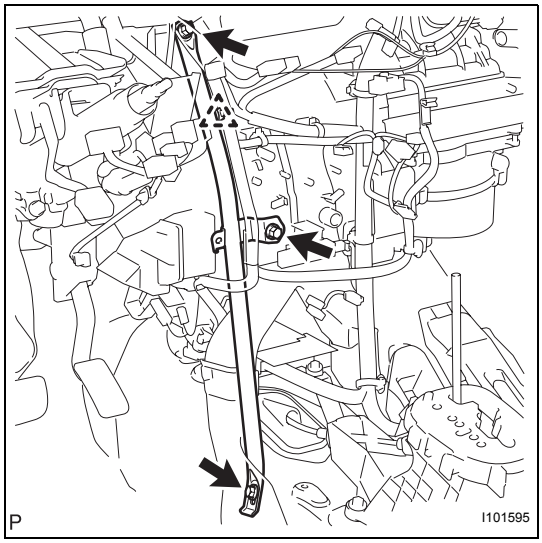

6. INSTALL INSTRUMENT PANEL BRACE SUB-ASSEMBLY

(a) Install the instrument panel brace with the bolt, screw and nut.

Torque: 9.8 N*m (100 kgf*cm, 87 in.*lbf) for screw
9.8 N*m (100 kgf*cm, 87 in.*lbf) for nut
9.8 N*m (100 kgf*cm, 87 in.*lbf) for bolt

(b) Engage the clamp.

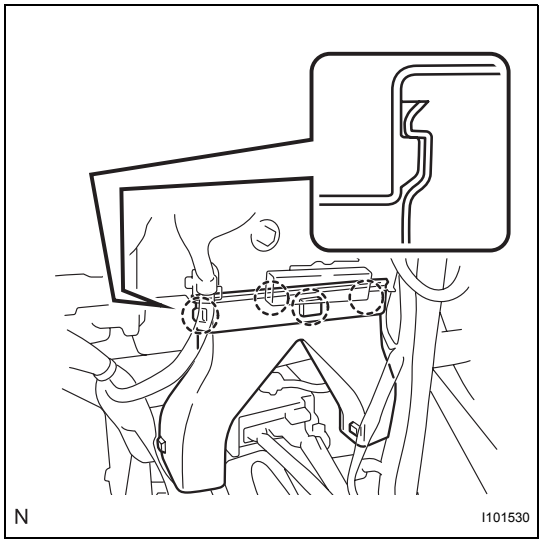

7. INSTALL REAR NO. 3 AIR DUCT (for Cold Area Specification Vehicles)

(a) Engage the 4 claws and install the air duct.

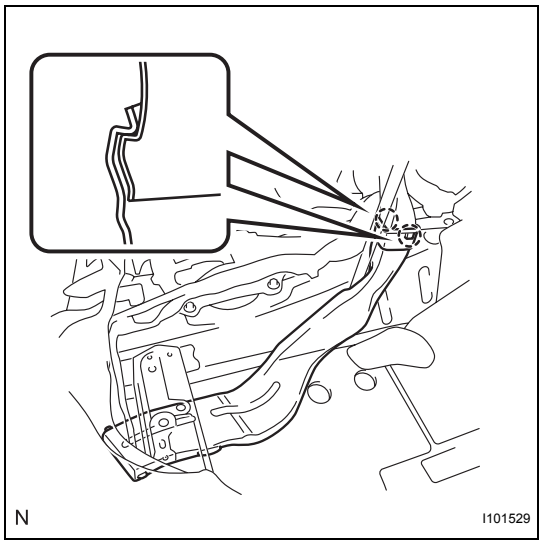

8. INSTALL REAR NO. 1 AIR DUCT (for Cold Area Specification Vehicles)

(a) Engage the 2 claws and install the air duct.

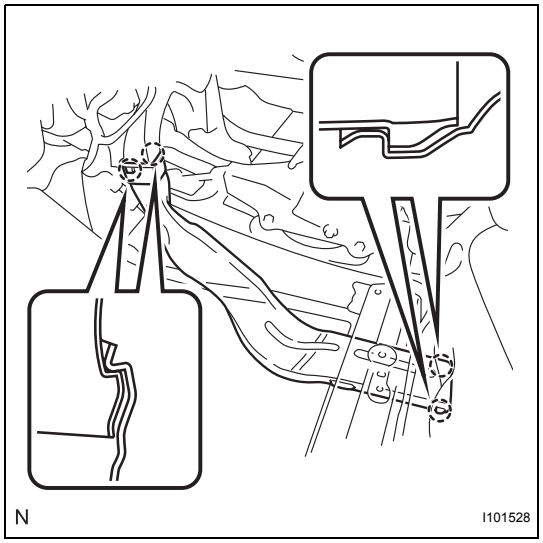

9. INSTALL REAR NO. 2 AIR DUCT (for Cold Area Specification Vehicles)

(a) Engage the 4 claws and install the air duct.

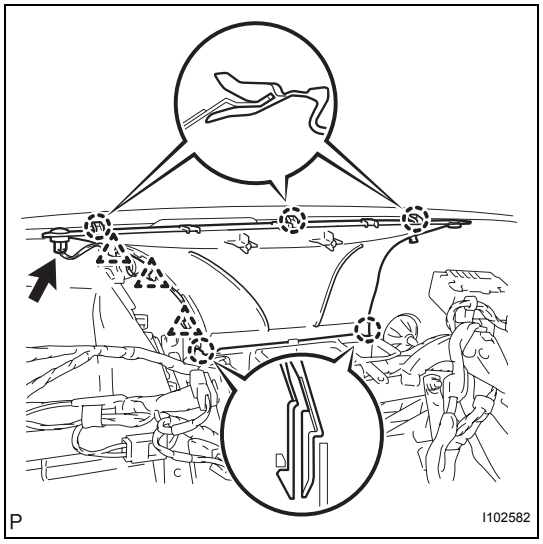

10. INSTALL DEFROSTER NOZZLE ASSEMBLY

(a) Engage the 5 claws and install the defroster nozzle.

(b) Connect the 3 clamps and connector and install the wire harness.

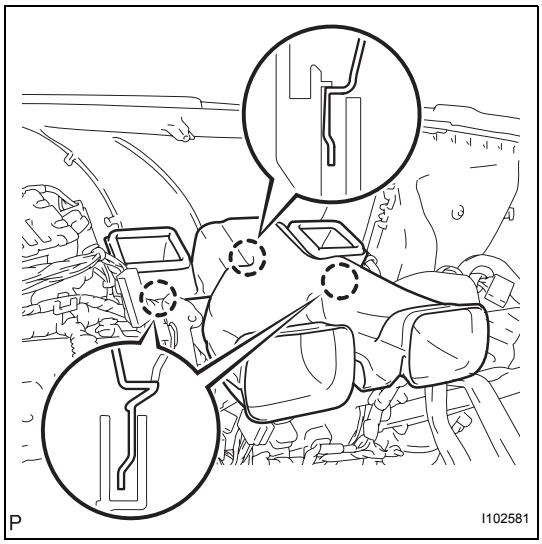

11. **INSTALL HEATER TO REGISTER DUCT ASSEMBLY**
    (a) Engage the 3 claws and install the heater to register duct.
12. **INSTALL STEERING COLUMN ASSEMBLY (See page SR-19)**
13. **INSTALL BRAKE PEDAL SUPPORT SUB-ASSEMBLY (for Manual Transaxle) (See page BR-21)**
14. **INSTALL BRAKE MASTER CYLINDER PUSH ROD CLEVIS (for Manual Transaxle) (See page BR-21)**
15. **INSTALL BRAKE PEDAL (for Automatic Transaxle) (See page SR-19)**

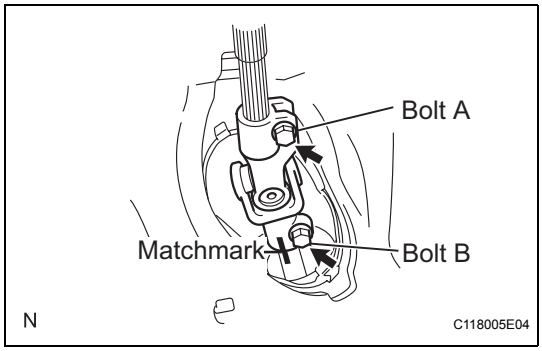

16. **INSTALL STEERING SLIDING YOKE SUB-ASSEMBLY**
    (a) Align the matchmarks and install the sliding yoke onto the power steering assembly with bolt B.
    Torque: 28 N*m (286 kgf*cm, 21 ft.*lbf)
    (b) Tighten bolt A.
    Torque: 28 N*m (286 kgf*cm, 21 ft.*lbf)
17. **INSTALL COLUMN HOLE COVER SILENCER SHEET (See page SR-20)**
18. **INSTALL INSTRUMENT PANEL SUB REINFORCEMENT**
19. **CONNECT POWER STEERING ECU (See page SR-21)**
20. **INSTALL COMBINATION SWITCH ASSEMBLY (See page SR-21)**
21. **INSTALL STEERING COLUMN COVER (See page SR-22)**
22. **INSTALL STEERING WHEEL ASSEMBLY (See page SR-22)**
23. **INSTALL STEERING PAD (See page RS-310)**
24. **INSTALL LOWER INSTRUMENT PANEL SUB-ASSEMBLY (See page IP-52)**
25. **CONNECT HOOD LOCK CONTROL LEVER SUB-ASSEMBLY (See page IP-53)**
26. **CONNECT ANTENNA CORD SUB-ASSEMBLY (See page IP-53)**
27. **INSTALL INSTRUMENT PANEL BOX (See page IP-53)**
28. **INSTALL INSTRUMENT PANEL LOWER FINISH PANEL SUB-ASSEMBLY (See page IP-54)**
29. **INSTALL INSTRUMENT PAD LOWER RH (See page IP-54)**

30. **INSTALL INSTRUMENT PAD LOWER LH (See page IP-55)**
31. **INSTALL REAR CONSOLE BOX ASSEMBLY (See page IP-88)**
32. **INSTALL CONSOLE BOX CARPET (See page IP-88)**
33. **INSTALL CONSOLE UPPER REAR PANEL SUB-ASSEMBLY (See page IP-89)**
34. **INSTALL UPPER CONSOLE PANEL SUB-ASSEMBLY (See page IP-89)**
35. **INSTALL SHIFT LEVER KNOB SUB-ASSEMBLY (for Manual Transaxle) (See page IP-89)**
36. **INSTALL COWL SIDE TRIM BOARD RH (See page IR-34)**
37. **INSTALL COWL SIDE TRIM BOARD LH (See page IR-34)**
38. **INSTALL INSTRUMENT PANEL UNDER COVER SUB-ASSEMBLY RH (See page IR-35)**
39. **INSTALL INSTRUMENT PANEL UNDER COVER SUB-ASSEMBLY LH (See page IR-35)**
40. **INSTALL FRONT DOOR SCUFF PLATE RH (See page IR-35)**
41. **INSTALL FRONT DOOR SCUFF PLATE LH (See page IR-35)**
42. **INSTALL UPPER INSTRUMENT PANEL SUB-ASSEMBLY (See page IP-11)**
43. **INSTALL GLOVE COMPARTMENT DOOR ASSEMBLY (See page IP-13)**
44. **INSTALL FRONT PILLAR GARNISH RH (See page IR-29)**
45. **INSTALL FRONT PILLAR GARNISH LH (See page IR-30)**
46. **INSTALL FRONT DOOR OPENING TRIM WEATHERSTRIP RH (See page IP-14)**
47. **INSTALL FRONT DOOR OPENING TRIM WEATHERSTRIP LH (See page IP-14)**
48. **CONNECT AIR INLET DAMPER CONTROL CABLE SUB-ASSEMBLY (See page AC-246)**
49. **CONNECT DEFROSTER DAMPER CONTROL CABLE SUB-ASSEMBLY (See page AC-246)**
50. **CONNECT AIR MIX DAMPER CONTROL CABLE SUB-ASSEMBLY (See page AC-246)**
51. **INSTALL AIR CONDITIONING PANEL ASSEMBLY (See page AC-246)**

52. INSTALL STEREO OPENING COVER (w/o Radio Receiver) (See page IP-56)

53. INSTALL RADIO RECEIVER ASSEMBLY (See page AV-40)

54. INSTALL INSTRUMENT CLUSTER FINISH PANEL CENTER SUB-ASSEMBLY (See page IP-56)

55. INSTALL COMBINATION METER ASSEMBLY (See page ME-140)

56. INSTALL INSTRUMENT CLUSTER FINISH PANEL (See page ME-140)

57. INSTALL INSTRUMENT PANEL FINISH PANEL END RH (See page ME-141)

58. INSTALL INSTRUMENT PANEL FINISH PANEL END LH (See page ME-141)

59. INSTALL INSTRUMENT PANEL FINISH PANEL LOWER CENTER (See page ME-142)

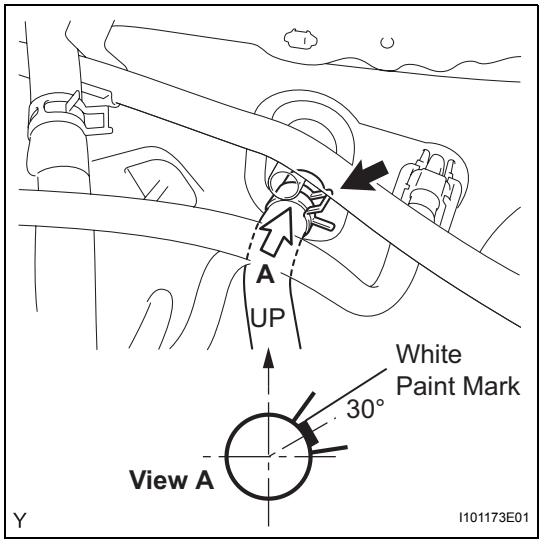

60. CONNECT HEATER WATER INLET HOSE

(a) Install the heater water inlet hose onto the heater unit.

NOTICE:

Perform the installation with the hose clip and mark at the correct angle as shown in the illustration.

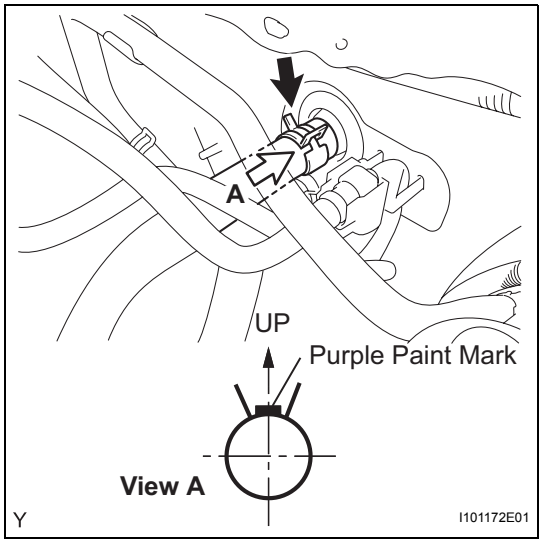

61. CONNECT HEATER WATER OUTLET HOSE

(a) Install the heater water outlet hose onto the heater unit.

NOTICE:

Perform the installation with the hose clip and mark at the correct angle as shown in the illustration.

62. INSTALL LIQUID TUBE SUB-ASSEMBLY

(a) Remove the vinyl tape from the liquid tube and the connecting portion of the unit.

(b) Apply sufficient compressor oil (ND-OIL8) to a new O-ring and the connecting part of the liquid tube.

Compressor oil:

ND-OIL8 or the equivalent

(c) Install the O-ring onto the liquid tube.

(d) Connect the liquid tube to the unit.

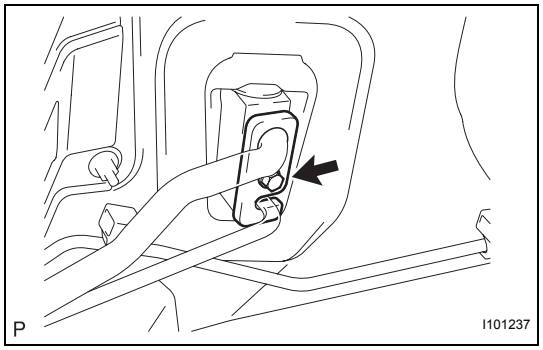

63. INSTALL SUCTION TUBE SUB-ASSEMBLY

(a) Remove the vinyl tape from the suction tube and the connecting part of the unit.

(b) Apply sufficient compressor oil (ND-OIL8) to a new O-ring and the connecting part of the suction tube.
Compressor oil:
ND-OIL8 or the equivalent

(c) Install the O-ring onto the suction tube.

(d) Insert the tube joints securely into the fitting holes and tighten the bolt.
Torque: 9.8 N*m (100 kgf*cm, 87 in.*lbf)

64. ADD ENGINE COOLANT (for 1NZ-FE) (See page CO-8)

65. CONNECT CABLE TO NEGATIVE BATTERY TERMINAL
Torque: 5.4 N*m (55 kgf*cm, 48 in.*lbf)

66. CHECK SRS WARNING LIGHT
(See page RS-31)

67. CHARGE REFRIGERANT (See page AC-67)

68. WARM UP ENGINE (See page AC-69)

69. CHECK FOR ENGINE COOLANT LEAK (for 1NZ-FE) (See page CO-1)

70. CHECK FOR REFRIGERANT LEAK (See page AC-69)

71. POSITION FRONT WHEELS FACING STRAIGHT AHEAD

72. PERFORM CALIBRATION OF TORQUE SENSOR ZERO POINT (See page SR-22)

AIR CONDITIONING UNIT (for Hatchback)

COMPONENTS

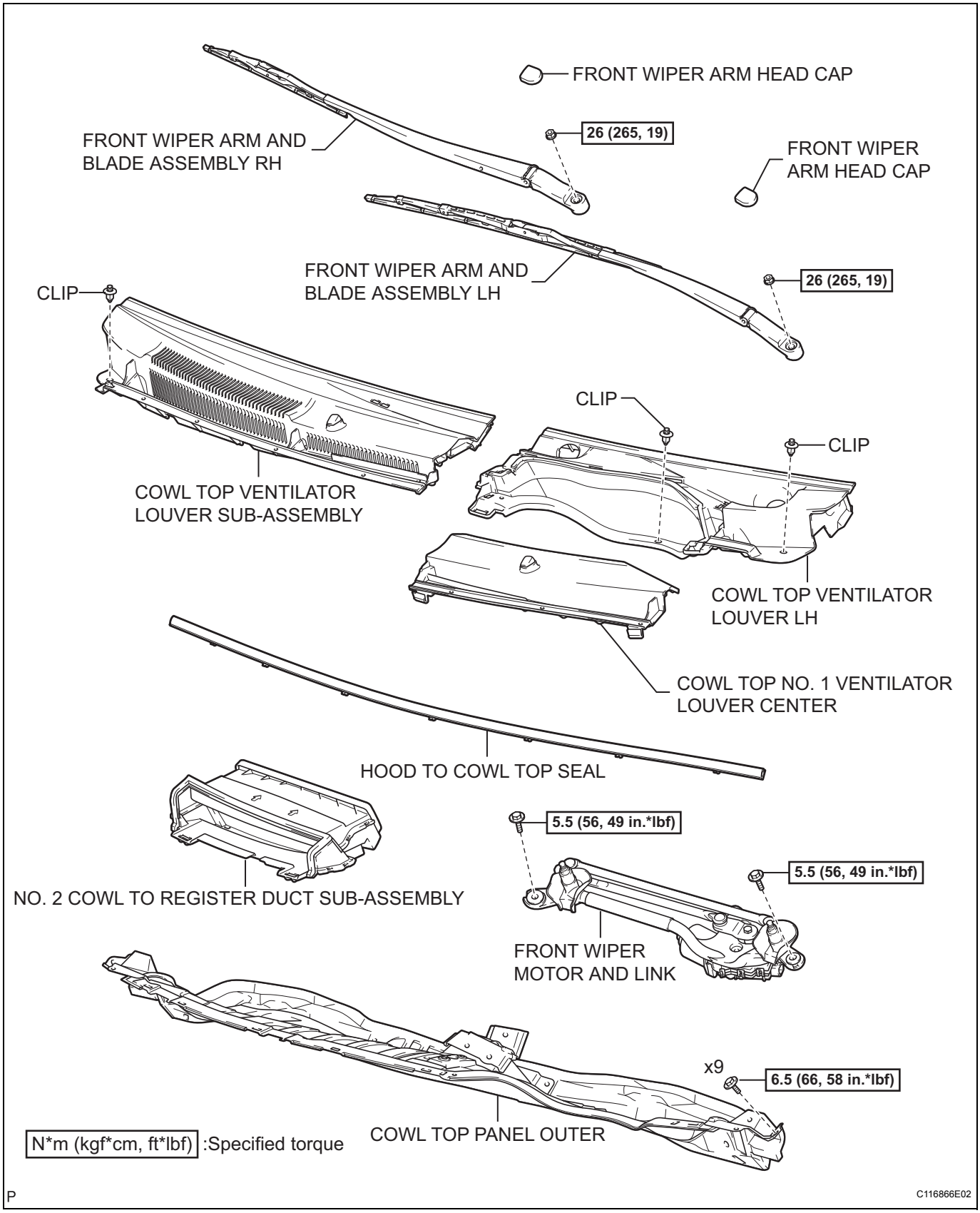

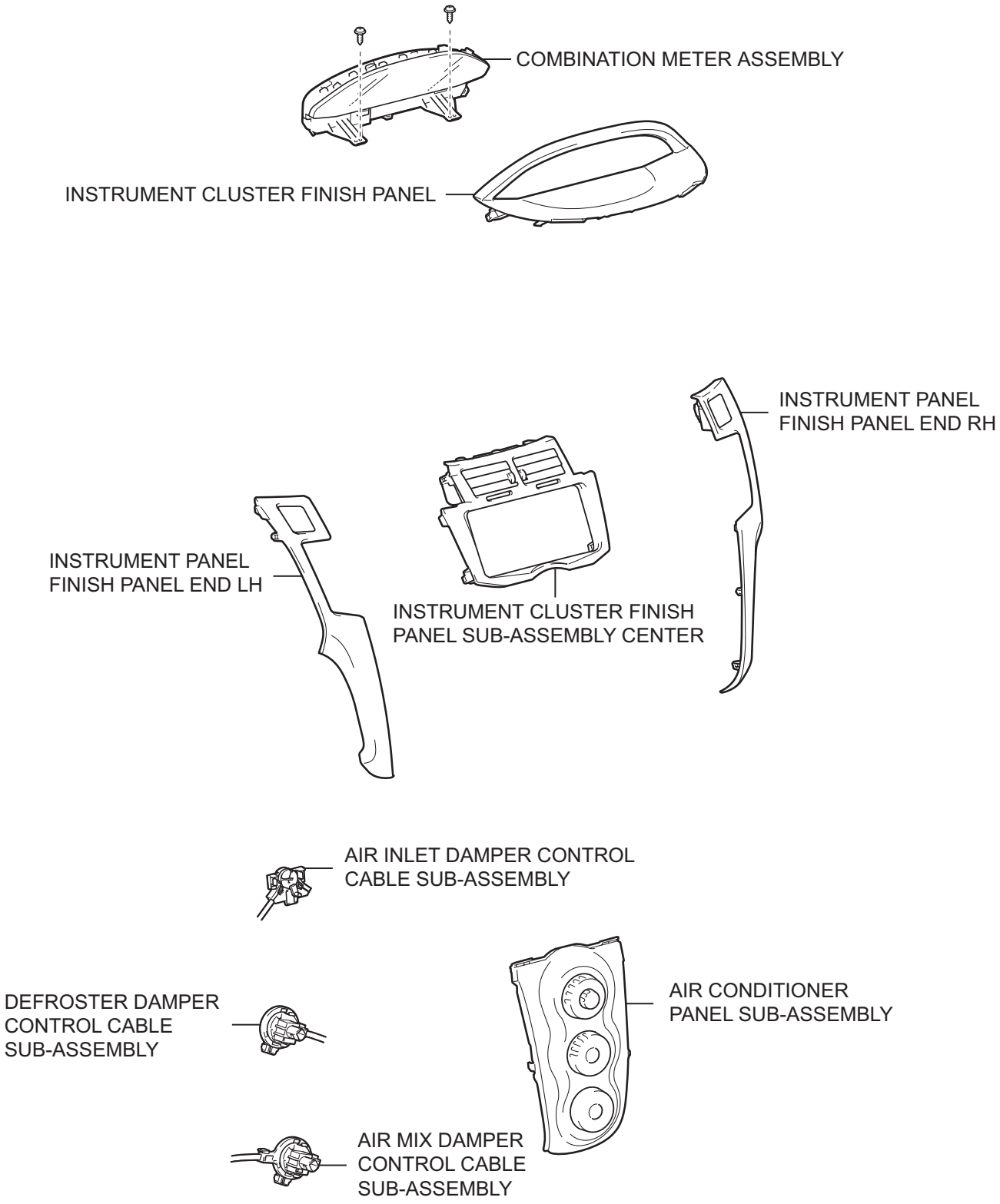

P

I101249E01

w/o Radio Receiver:

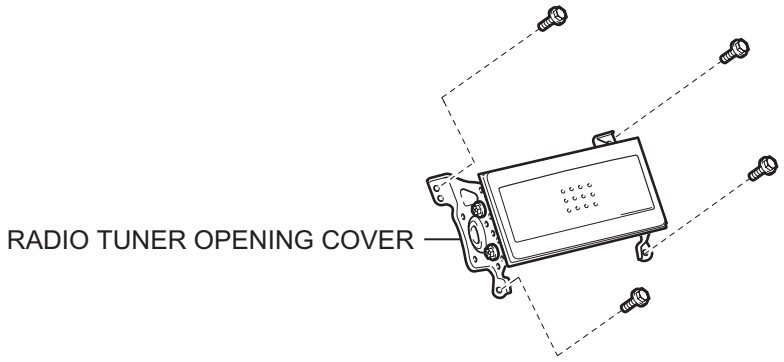

w/o CD Player:

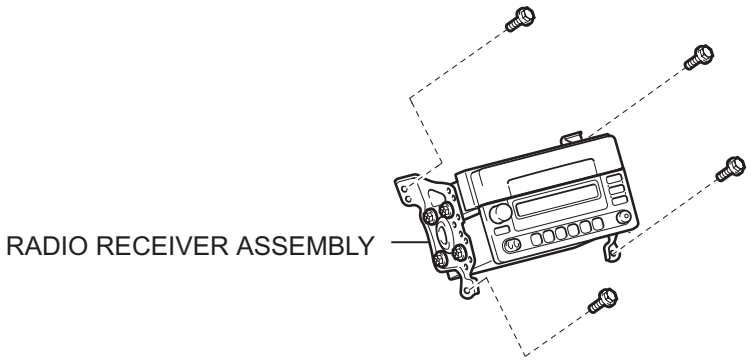

w/ CD Player:

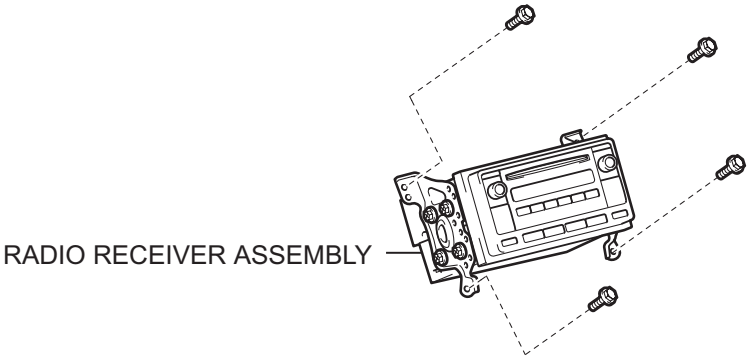

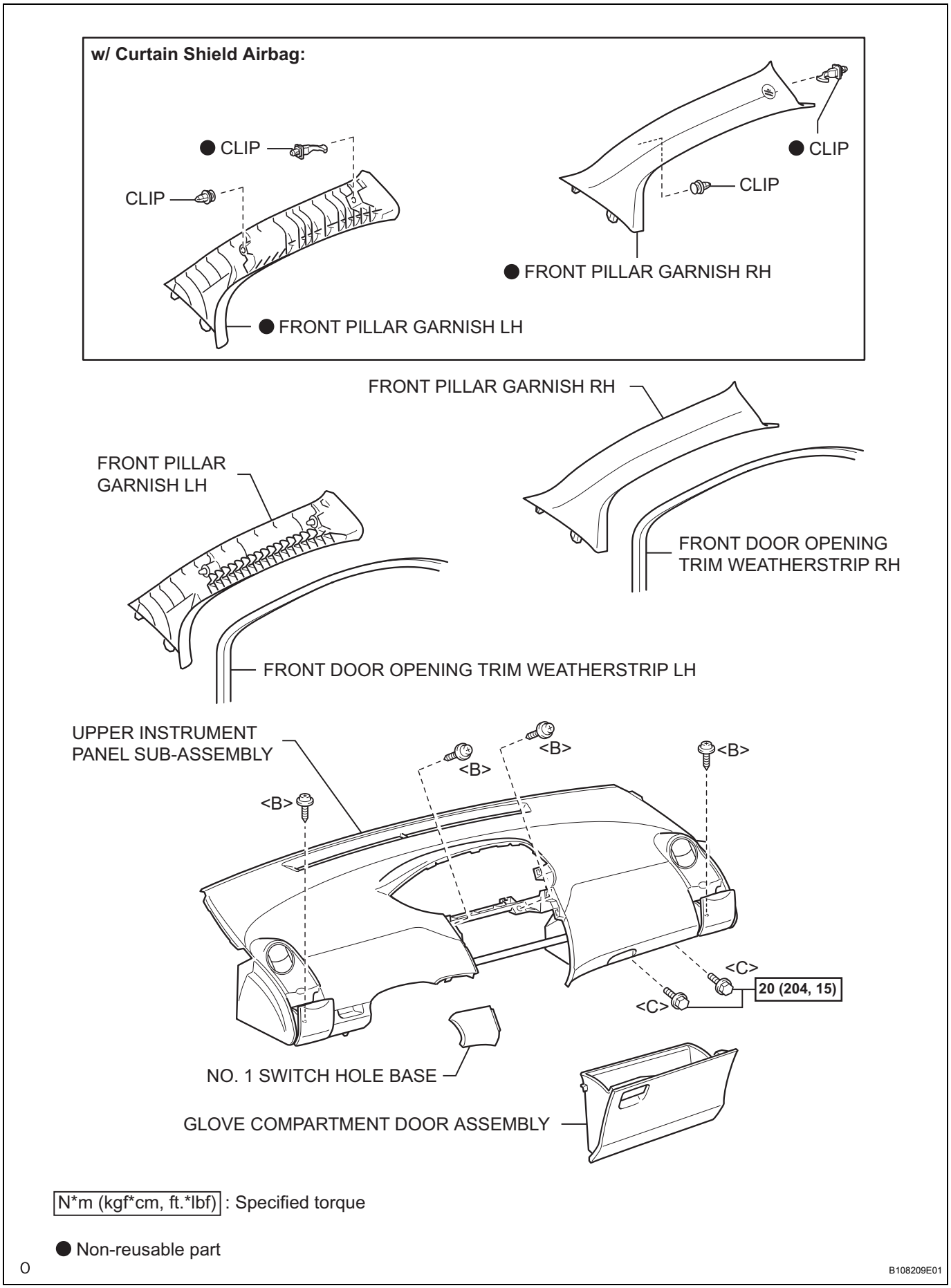
w/ Curtain Shield Airbag:
● CLIP
CLIP
● CLIP
CLIP
● FRONT PILLAR GARNISH RH
● FRONT PILLAR GARNISH LH
FRONT PILLAR GARNISH RH
FRONT PILLAR GARNISH LH
FRONT DOOR OPENING TRIM WEATHERSTRIP RH
FRONT DOOR OPENING TRIM WEATHERSTRIP LH
UPPER INSTRUMENT PANEL SUB-ASSEMBLY
<B>
<B>
<B>
<B>
<C>
<C>
20 (204, 15)
NO. 1 SWITCH HOLE BASE
GLOVE COMPARTMENT DOOR ASSEMBLY
N*m (kgf*cm, ft.*lbf) : Specified torque
● Non-reusable part
O
B108209E01

AC

for Manual Transaxle:

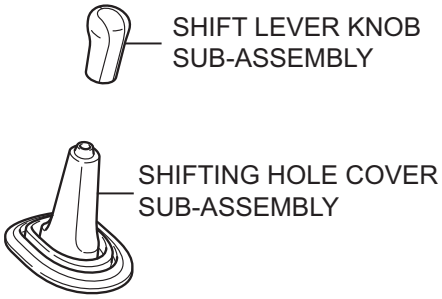

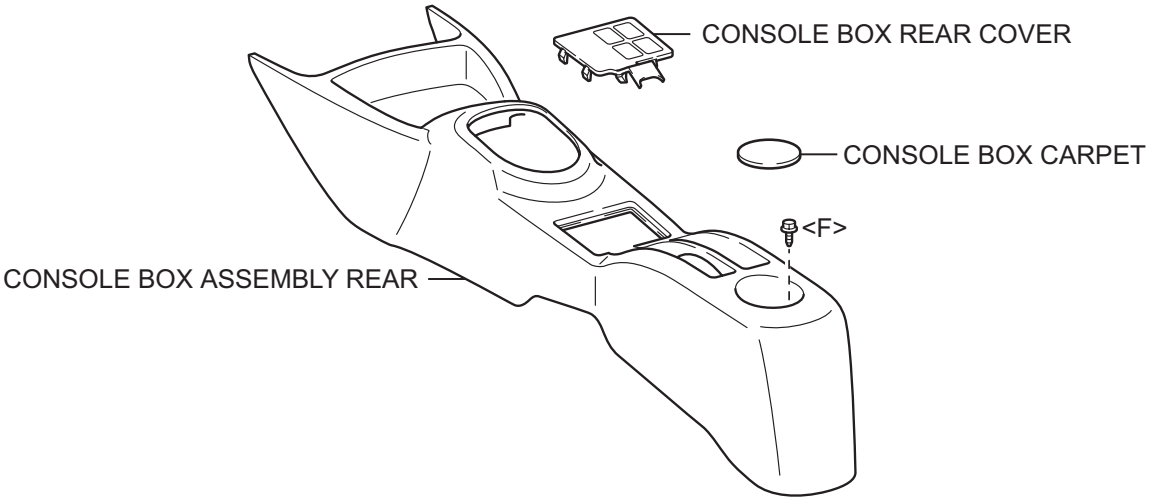

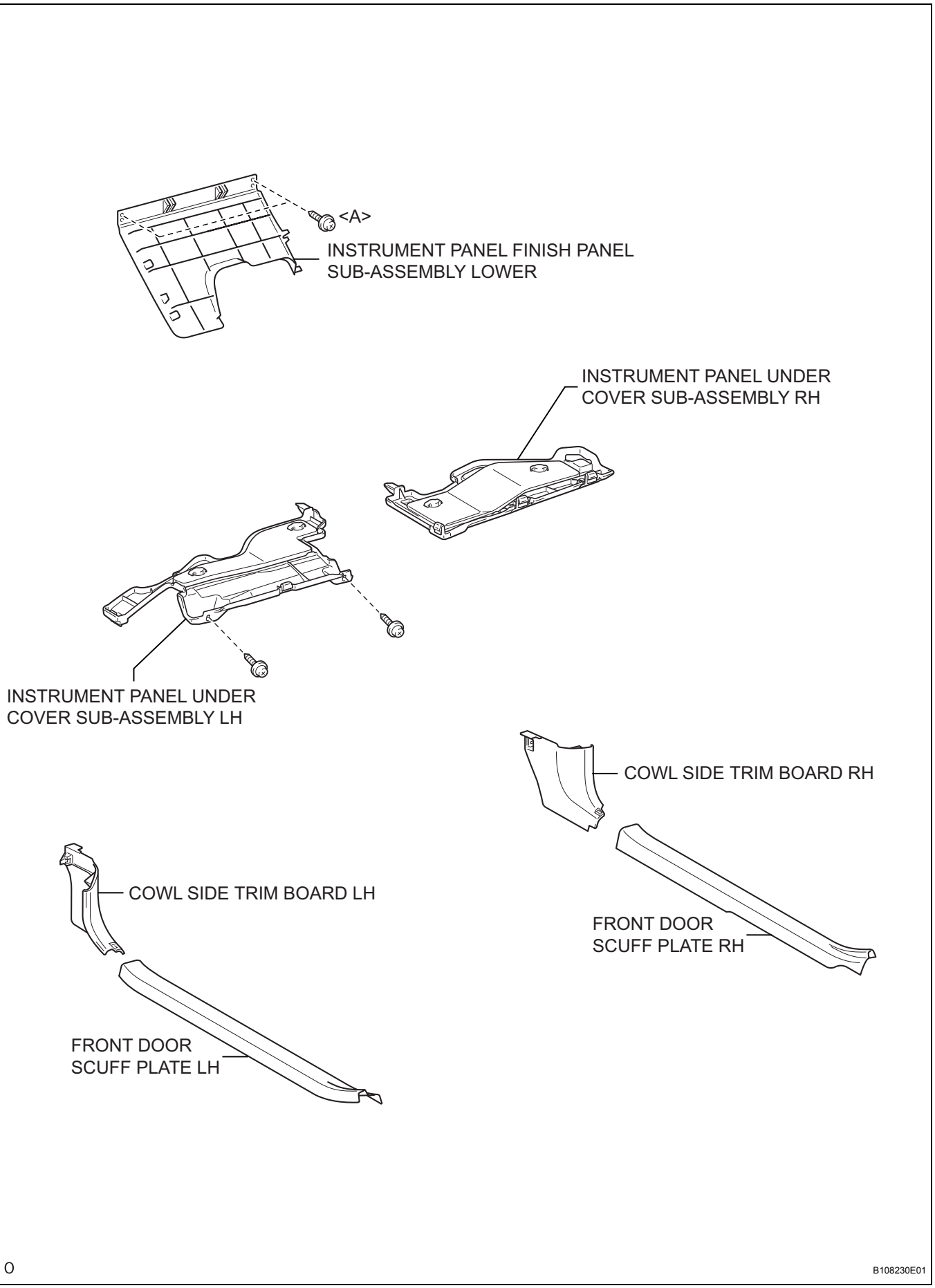
<A>
INSTRUMENT PANEL FINISH PANEL SUB-ASSEMBLY LOWER
INSTRUMENT PANEL UNDER COVER SUB-ASSEMBLY RH
INSTRUMENT PANEL UNDER COVER SUB-ASSEMBLY LH
COWL SIDE TRIM BOARD RH
COWL SIDE TRIM BOARD LH
FRONT DOOR SCUFF PLATE RH
FRONT DOOR SCUFF PLATE LH
O
B108230E01

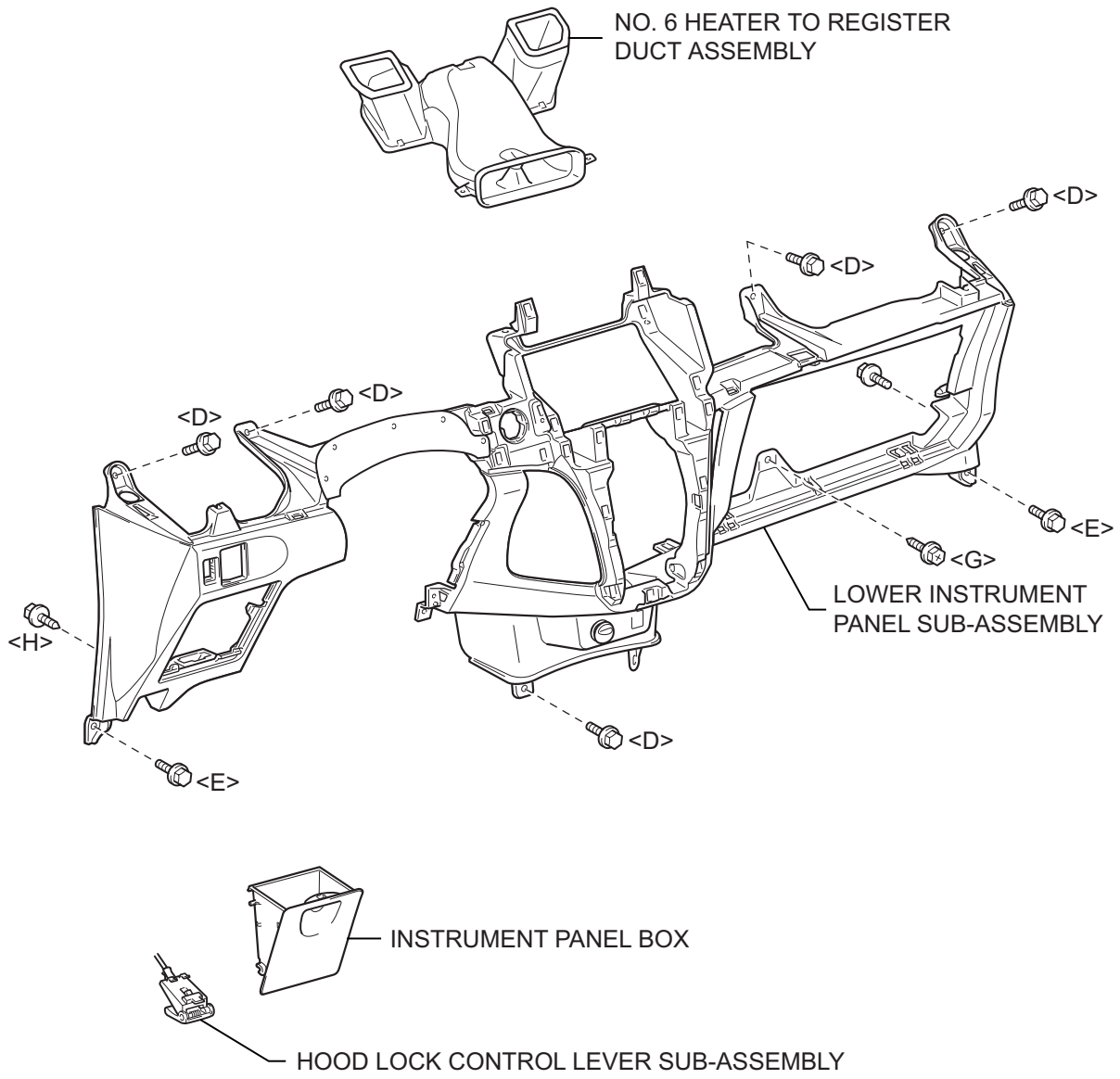

O

B108207E01

for Manual Transaxle:

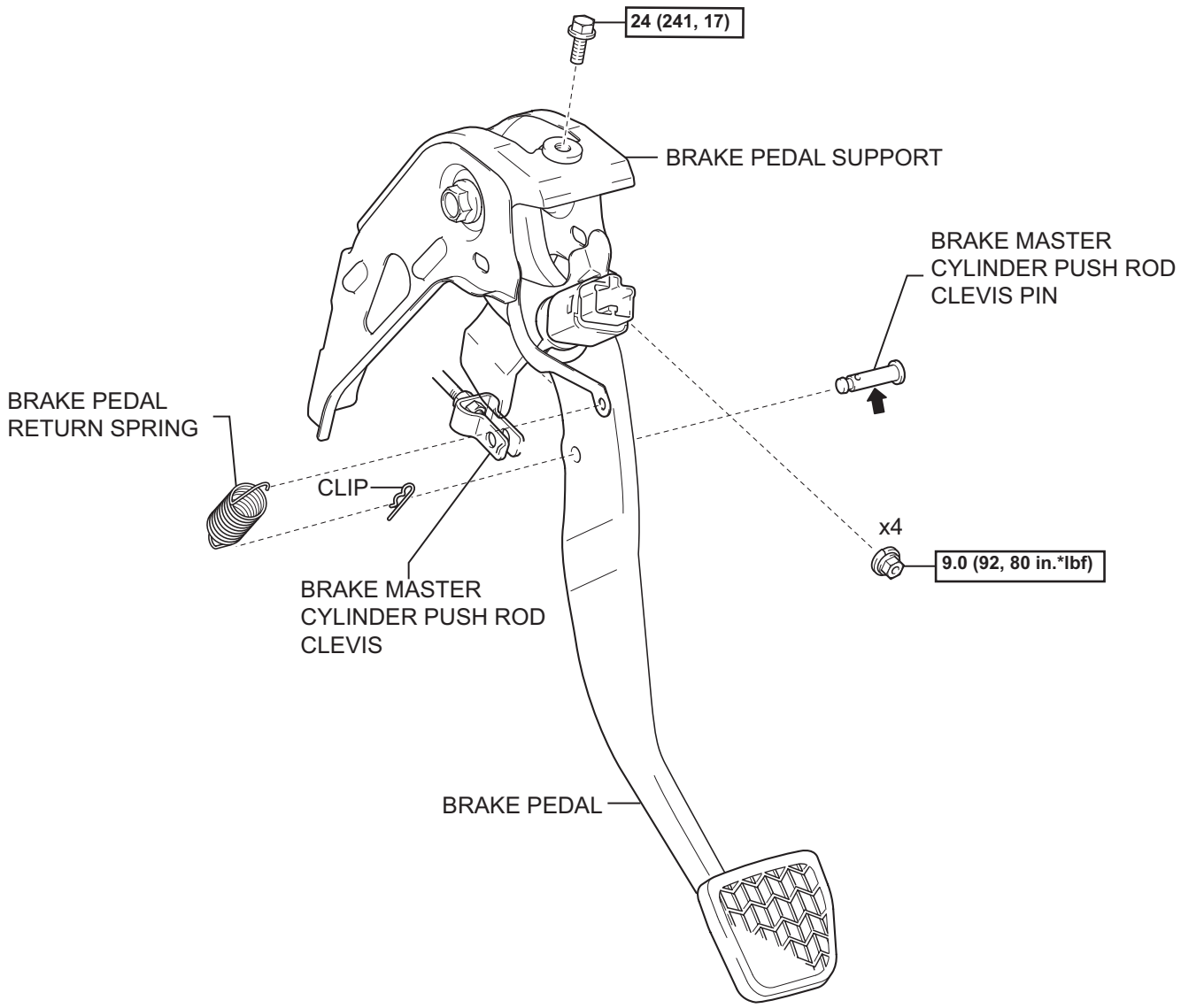

N*m (kgf*cm, ft.*lbf) : Specified torque ⬅ Lithium Soap base glycol grease

P

C118552E01

for Automtic Transaxle:

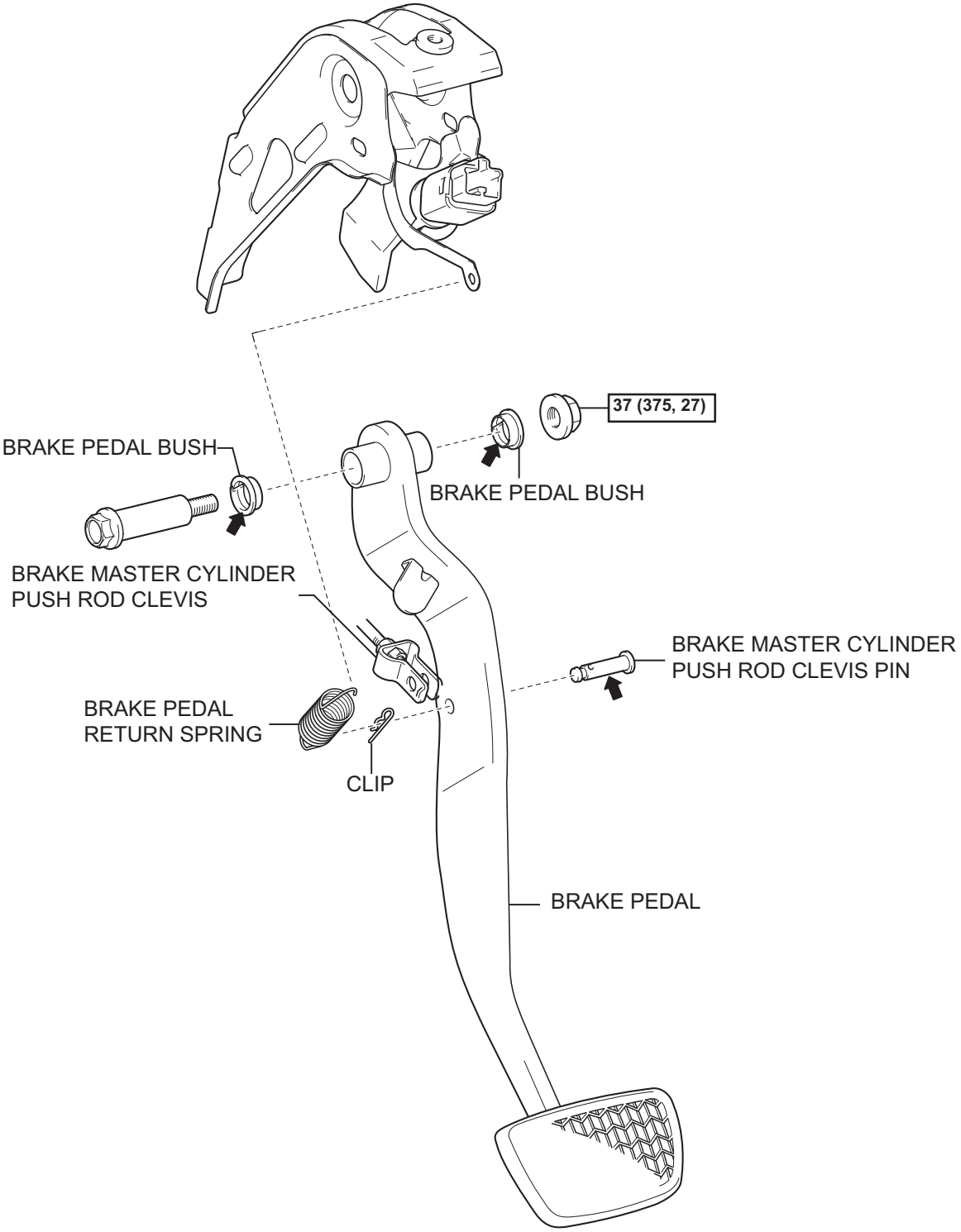

N*m (kgf*cm, ft.*lbf) : Specified torque ⬅ Lithium Soap base glycol grease

P

C118551E01

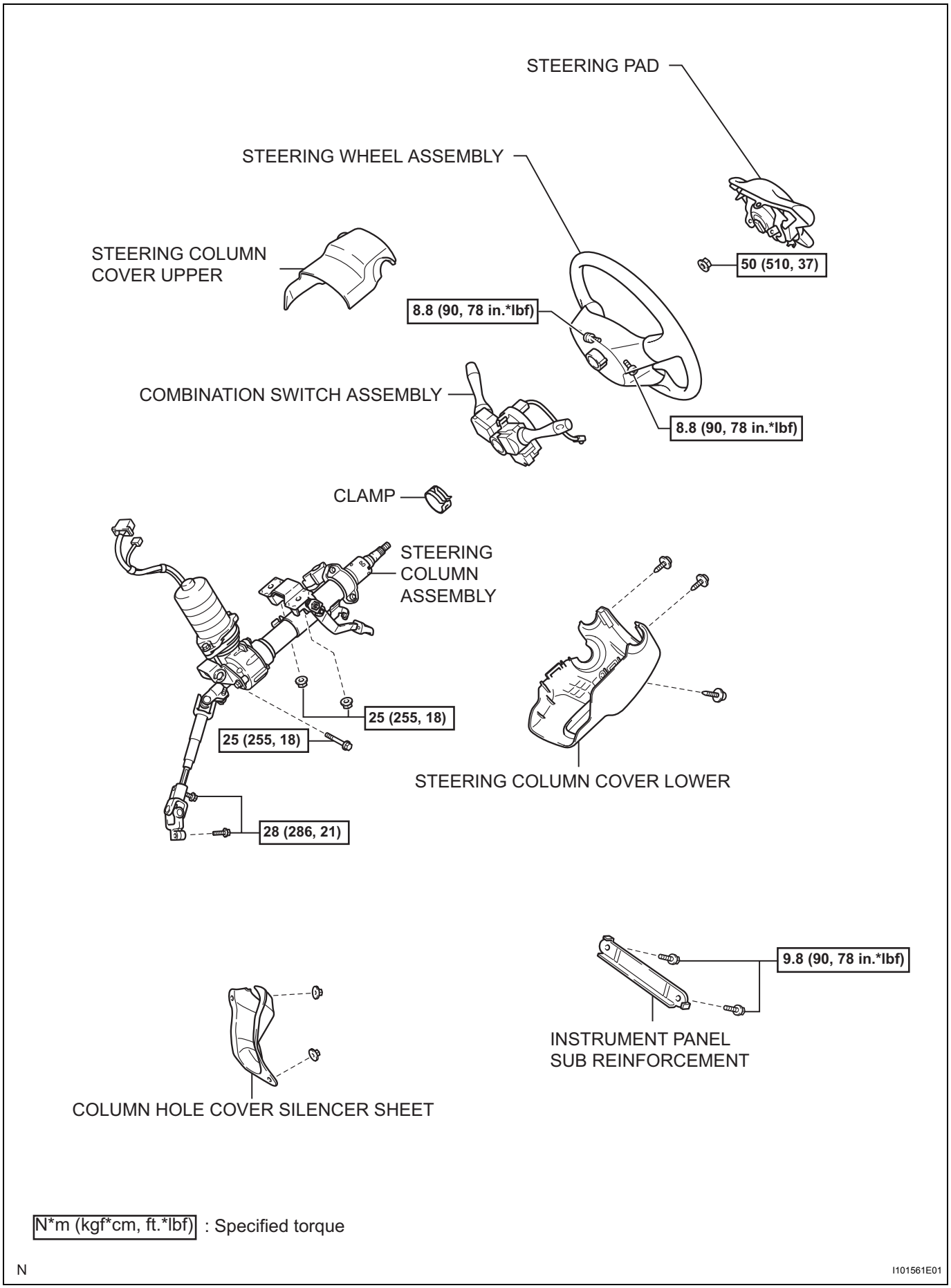

N*m (kgf*cm, ft.*lbf) : Specified torque

N

I101561E01

AC

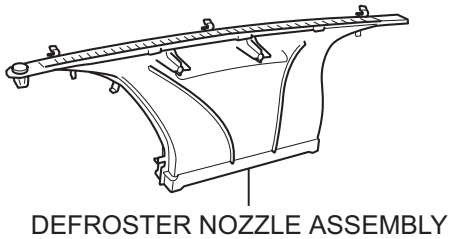

for Cold Area Specification Vehicles:

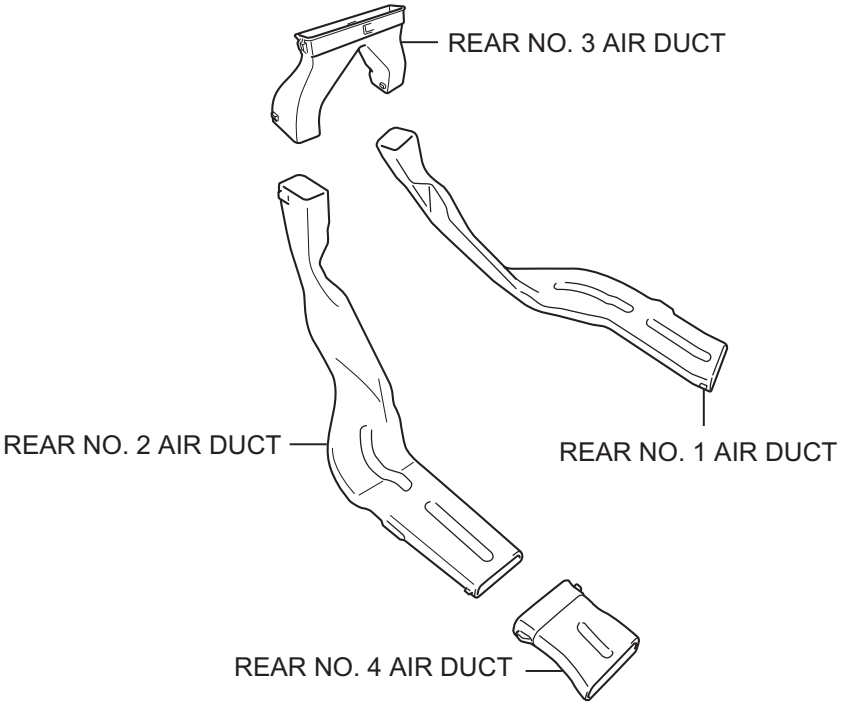

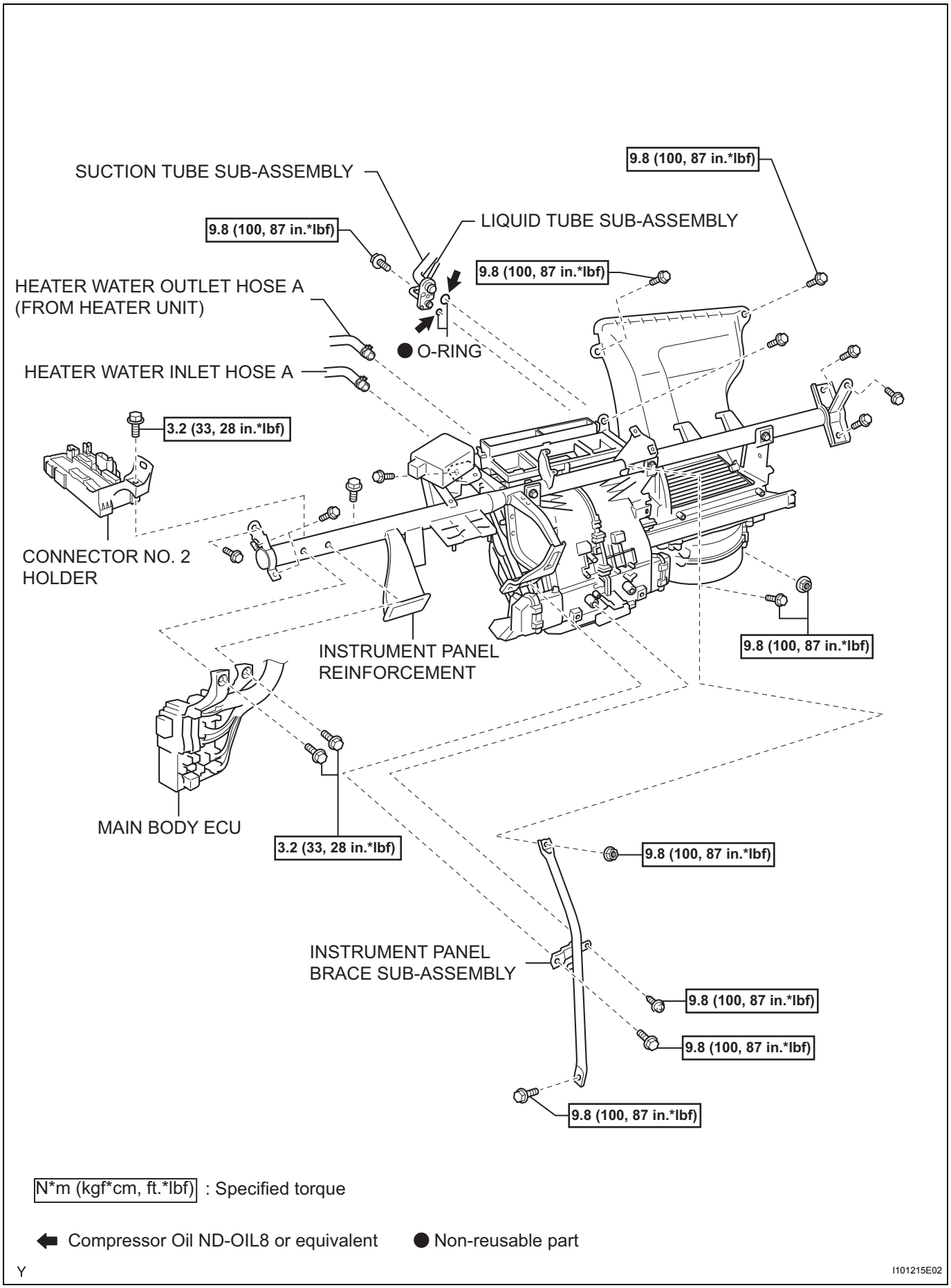
SUCTION TUBE SUB-ASSEMBLY
9.8 (100, 87 in.*lbf)
LIQUID TUBE SUB-ASSEMBLY
9.8 (100, 87 in.*lbf)
9.8 (100, 87 in.*lbf)
HEATER WATER OUTLET HOSE A
(FROM HEATER UNIT)
● O-RING
HEATER WATER INLET HOSE A
3.2 (33, 28 in.*lbf)
CONNECTOR NO. 2
HOLDER
INSTRUMENT PANEL
REINFORCEMENT
9.8 (100, 87 in.*lbf)
MAIN BODY ECU
3.2 (33, 28 in.*lbf)
9.8 (100, 87 in.*lbf)
INSTRUMENT PANEL
BRACE SUB-ASSEMBLY
9.8 (100, 87 in.*lbf)
9.8 (100, 87 in.*lbf)
9.8 (100, 87 in.*lbf)
N*m (kgf*cm, ft.*lbf) : Specified torque
Compressor Oil ND-OIL8 or equivalent
● Non-reusable part
Y
I101215E02

AC

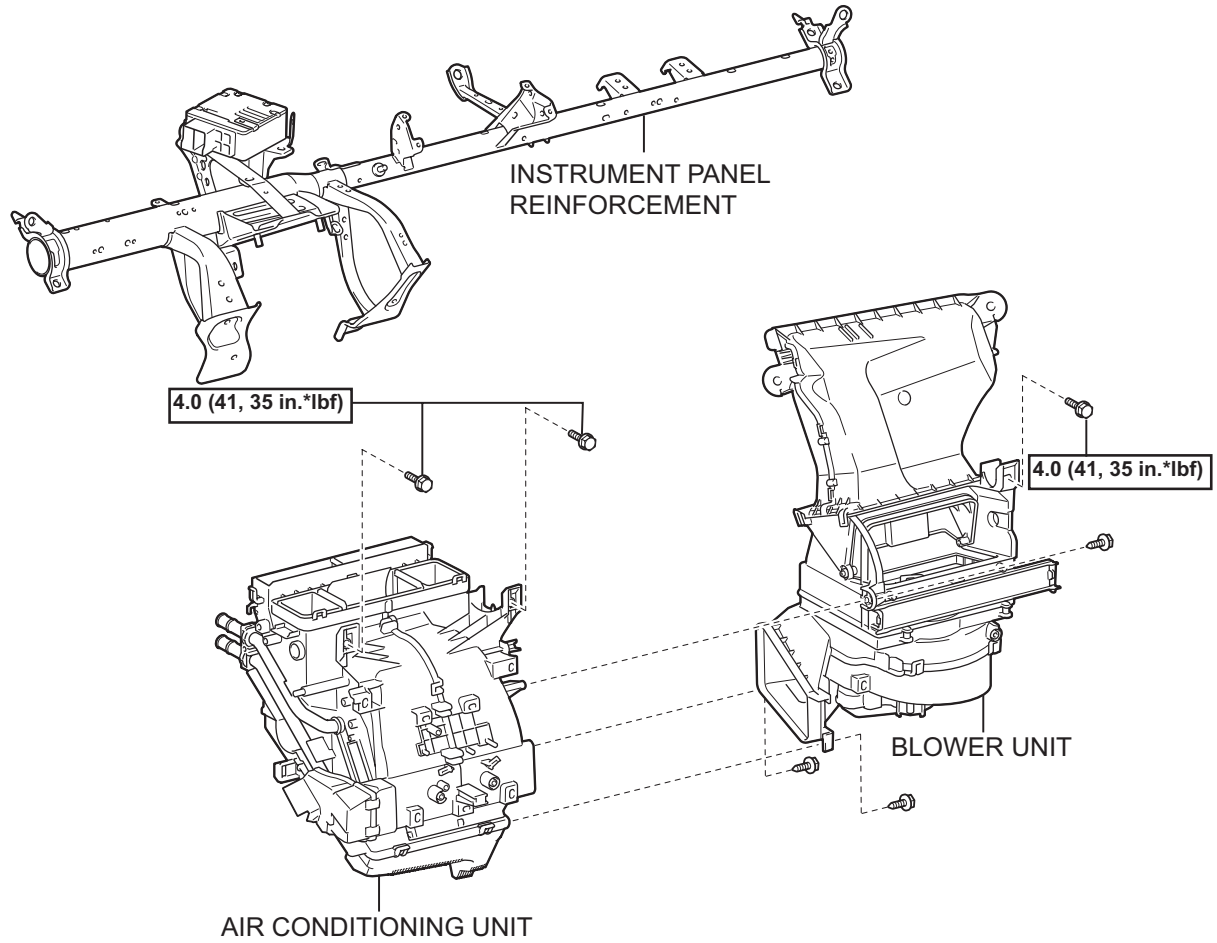

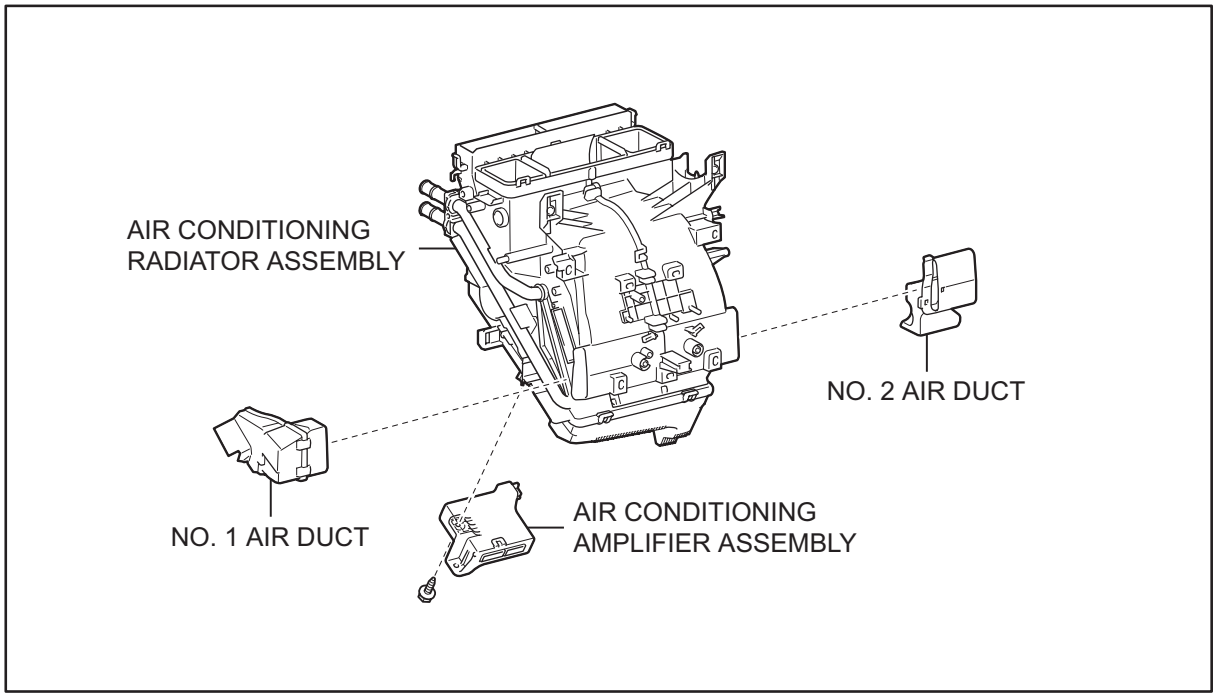

AC

N*m (kgf*cm, ft.*lbf) : Specified torque

P

I101574E01

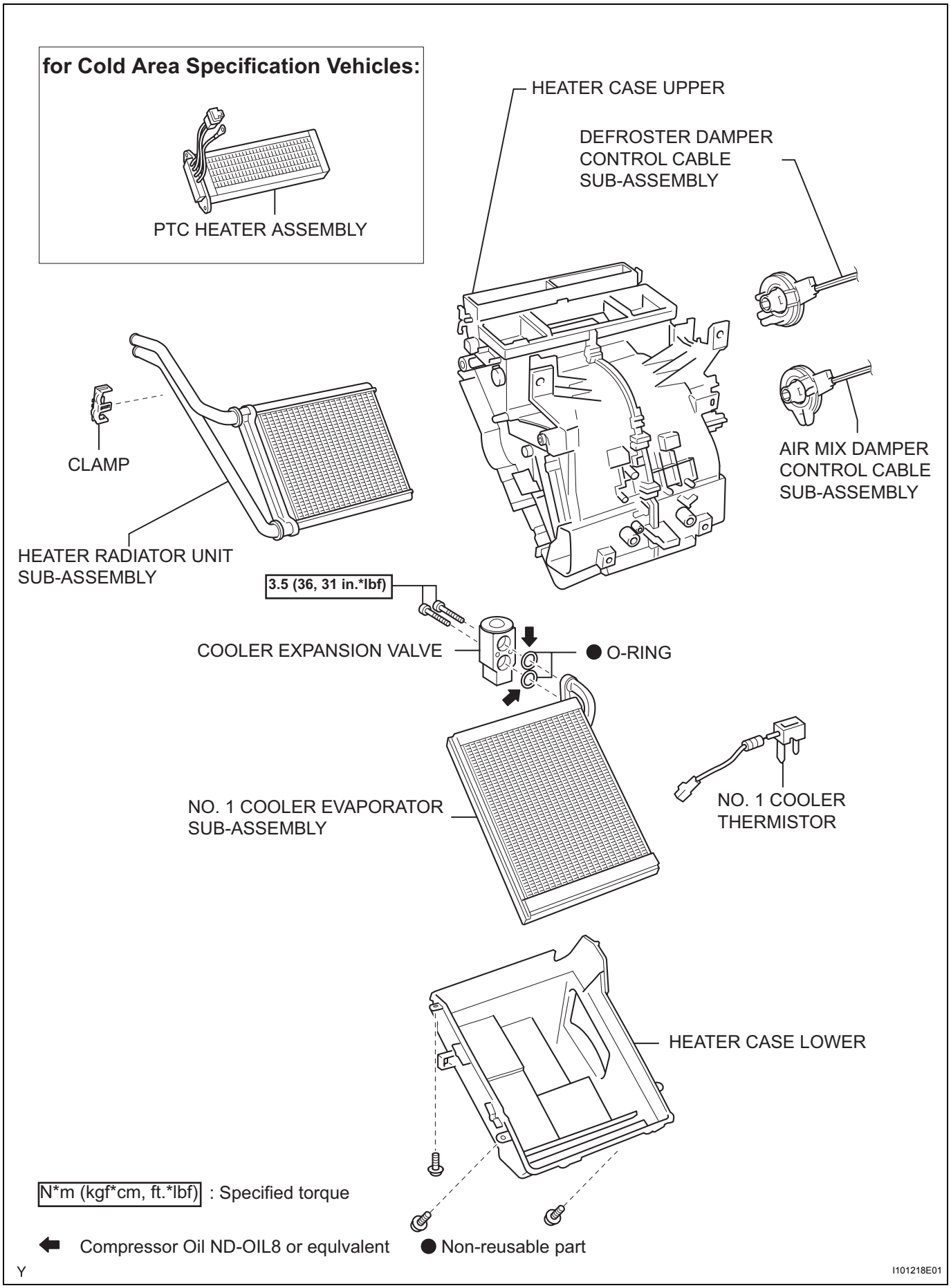
for Cold Area Specification Vehicles:
PTC HEATER ASSEMBLY
HEATER CASE UPPER
DEFROSTER DAMPER CONTROL CABLE SUB-ASSEMBLY
CLAMP
HEATER RADIATOR UNIT SUB-ASSEMBLY
AIR MIX DAMPER CONTROL CABLE SUB-ASSEMBLY
3.5 (36, 31 in.*lbf)
COOLER EXPANSION VALVE
● O-RING
NO. 1 COOLER EVAPORATOR SUB-ASSEMBLY
NO. 1 COOLER THERMISTOR
HEATER CASE LOWER
N*m (kgf*cm, ft.*lbf) : Specified torque
Compressor Oil ND-OIL8 or equlvalent
● Non-reusable part
Y
I101218E01

REMOVAL

CAUTION:
Some of these service operations affect the SRS airbag system. Read the precautionary notices concerning the SRS airbag system before servicing (See page RS-31).
HINT:
Use the same procedure for both the RH and LH sides.

1. **DISCONNECT CABLE FROM NEGATIVE BATTERY TERMINAL**
   Wait for at least 90 seconds after disconnecting the cable to prevent the airbag from working.
2. **DISCHARGE REFRIGERANT FROM REFRIGERATION SYSTEM (See page AC-66)**
3. **DRAIN ENGINE COOLANT (See page CO-8)**
4. **REMOVE FRONT WIPER ARM HEAD CAP (See page WW-17)**
5. **REMOVE FRONT WIPER ARM AND BLADE ASSEMBLY LH (See page WW-17)**
6. **REMOVE FRONT WIPER ARM AND BLADE ASSEMBLY RH (See page WW-17)**
7. **REMOVE HOOD TO COWL TOP SEAL (See page WW-18)**
8. **REMOVE COWL TOP VENTILATOR LOUVER SUB-ASSEMBLY (See page WW-18)**
9. **REMOVE COWL TOP VENTILATOR LOUVER LH (See page WW-18)**
10. **REMOVE FRONT WIPER MOTOR AND LINK (See page WW-19)**
11. **REMOVE NO. 2 COWL TO REGISTER DUCT SUB-ASSEMBLY (See page EM-122)**
12. **REMOVE COWL TOP PANEL OUTER (See page EM-123)**
13. **DISCONNECT SUCTION TUBE SUB-ASSEMBLY**
    (a) Remove the bolt.
    (b) Turn the hook type connector clockwise and disconnect the suction tube.
    (c) Remove the O-ring from the suction tube.
    NOTICE:
    Seal the openings of the disconnected parts using vinyl tape to prevent moisture and foreign matter from entering.

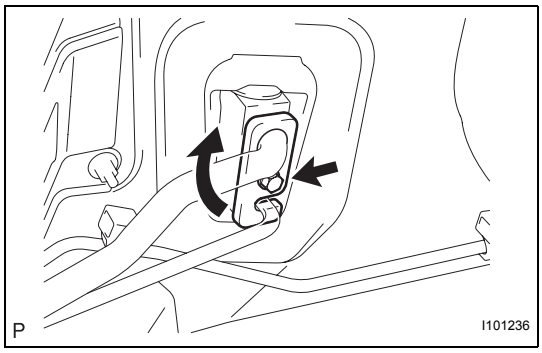

14. **DISCONNECT LIQUID TUBE SUB-ASSEMBLY**
    (a) Disconnect the liquid tube.

(b) Remove the O-ring from liquid tube.
NOTICE:
Seal the opening of the disconnected parts using vinyl tape to prevent moisture and foreign matter from entering.

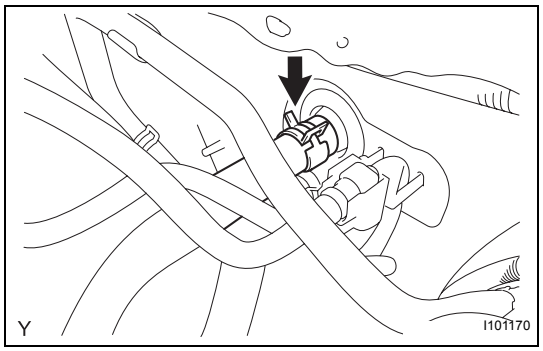

15. DISCONNECT HEATER WATER OUTLET HOSE A (FROM HEATER UNIT)
(a) Using pliers, grip the claws of the clip, slide the clip and disconnect the heater water outlet hose from the heater unit.

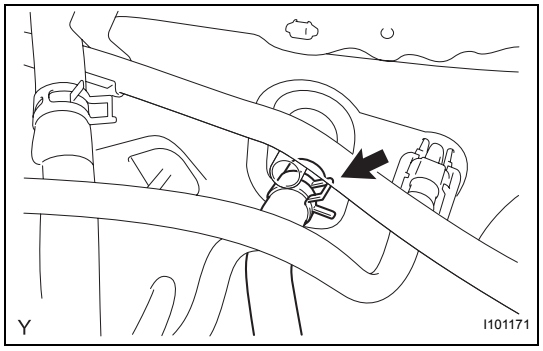

16. DISCONNECT HEATER WATER INLET HOSE A
(a) Using pliers, grip the claws of the clip, slide the clip and disconnect the heater water inlet hose from the heater unit.

17. BOLTS, SCREWS AND NUTS TABLE (See page IP-66)

18. REMOVE INSTRUMENT PANEL FINISH PANEL END LH (See page ME-145)

19. REMOVE INSTRUMENT PANEL FINISH PANEL END RH (See page ME-145)

20. REMOVE INSTRUMENT CLUSTER FINISH PANEL (See page ME-145)

21. REMOVE COMBINATION METER ASSEMBLY (See page ME-146)

22. REMOVE INSTRUMENT CLUSTER FINISH PANEL SUB-ASSEMBLY CENTER (See page AC-250)

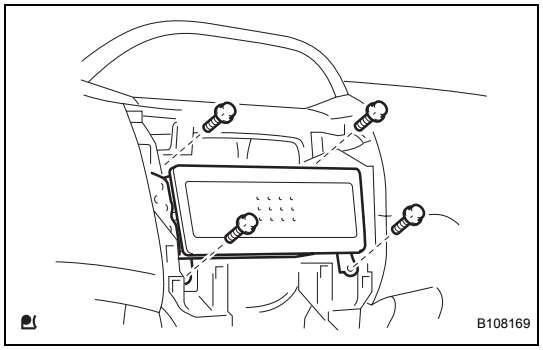

23. REMOVE RADIO TUNER OPENING COVER (w/o Radio Receiver)
(a) Remove the 4 bolts and the radio tuner opening cover.

24. REMOVE RADIO RECEIVER ASSEMBLY (See page AV-44)

25. REMOVE AIR CONDITIONER PANEL SUB-ASSEMBLY (See page AC-250)

26. DISCONNECT AIR MIX DAMPER CONTROL CABLE SUB-ASSEMBLY (See page AC-251)

27. DISCONNECT DEFROSTER DAMPER CONTROL CABLE SUB-ASSEMBLY (See page AC-251)

28. DISCONNECT AIR INLET DAMPER CONTROL CABLE SUB-ASSEMBLY (See page AC-251)

29. REMOVE FRONT DOOR OPENING TRIM WEATHERSTRIP RH (See page IR-50)

30. **REMOVE FRONT DOOR OPENING TRIM WEATHERSTRIP LH (See page IR-50)**
31. **REMOVE FRONT PILLAR GARNISH RH (See page IR-58)**
32. **REMOVE FRONT PILLAR GARNISH LH (See page IR-59)**
33. **REMOVE NO. 1 SWITCH HOLE BASE (See page IP-20)**
34. **REMOVE GLOVE COMPARTMENT DOOR ASSEMBLY (See page IP-20)**
35. **REMOVE UPPER INSTRUMENT PANEL SUB-ASSEMBLY (See page IP-21)**
36. **REMOVE FRONT DOOR SCUFF PLATE RH (See page IR-49)**
37. **REMOVE FRONT DOOR SCUFF PLATE LH (See page IR-49)**
38. **REMOVE INSTRUMENT PANEL UNDER COVER SUB-ASSEMBLY RH (See page IR-50)**
39. **REMOVE INSTRUMENT PANEL UNDER COVER SUB-ASSEMBLY LH (See page IR-50)**
40. **REMOVE COWL SIDE TRIM BOARD RH (See page IR-50)**
41. **REMOVE COWL SIDE TRIM BOARD LH (See page IR-50)**
42. **REMOVE SHIFT LEVER KNOB SUB-ASSEMBLY (for Manual Transaxle) (See page IP-68)**
43. **REMOVE SHIFTING HOLE COVER SUB-ASSEMBLY (for Manual Transaxle) (See page IP-68)**
44. **REMOVE CONSOLE BOX REAR COVER (See page IP-68)**
45. **REMOVE CONSOLE BOX CARPET (See page IP-68)**
46. **REMOVE CONSOLE BOX ASSEMBLY REAR (See page IP-69)**
47. **REMOVE INSTRUMENT PANEL FINISH PANEL SUB-ASSEMBLY LOWER (See page IP-69)**
48. **REMOVE INSTRUMENT PANEL BOX (See page IP-70)**
49. **REMOVE NO. 6 HEATER TO REGISTER DUCT ASSEMBLY (See page IP-70)**
50. **DISCONNECT ANTENNA CORD SUB-ASSEMBLY (See page IP-70)**
51. **SEPARATE HOOD LOCK CONTROL LEVER SUB-ASSEMBLY (See page IP-71)**
52. **REMOVE LOWER INSTRUMENT PANEL SUB-ASSEMBLY (See page IP-71)**

53. POSITION FRONT WHEELS FACING STRAIGHT AHEAD

54. REMOVE STEERING PAD (See page RS-309)

55. REMOVE STEERING WHEEL ASSEMBLY (See page SR-30)

56. REMOVE STEERING COLUMN COVER (See page SR-30)

57. REMOVE COMBINATION SWITCH ASSEMBLY (See page SR-31)

58. DISCONNECT POWER STEERING ECU (See page SR-32)

59. REMOVE INSTRUMENT PANEL SUB REINFORCEMENT (See page SR-32)

60. REMOVE COLUMN HOLE COVER SILENCER SHEET (See page SR-32)

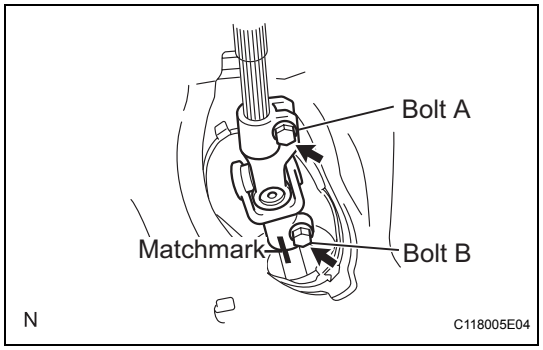

61. SEPARATE STEERING SLIDING YOKE SUB-ASSEMBLY

(a) Place matchmarks on the sliding yoke of the steering intermediate shaft and the power steering link.

(b) Loosen bolt A, remove bolt B and separate the steering yoke.

62. REMOVE BRAKE PEDAL (for Automatic Transaxle) (See page SR-32)

63. REMOVE BRAKE MASTER CYLINDER PUSH ROD CLEVIS (for Manual Transaxle) (See page BR-20)

64. REMOVE BRAKE PEDAL SUPPORT SUB-ASSEMBLY (for Manual Transaxle) (See page BR-21)

65. REMOVE STEERING COLUMN ASSEMBLY (See page SR-33)

66. REMOVE DEFROSTER NOZZLE ASSEMBLY

(a) Disconnect the connectors and clamps.

(b) Disengage the 5 claws and remove the defroster nozzle.

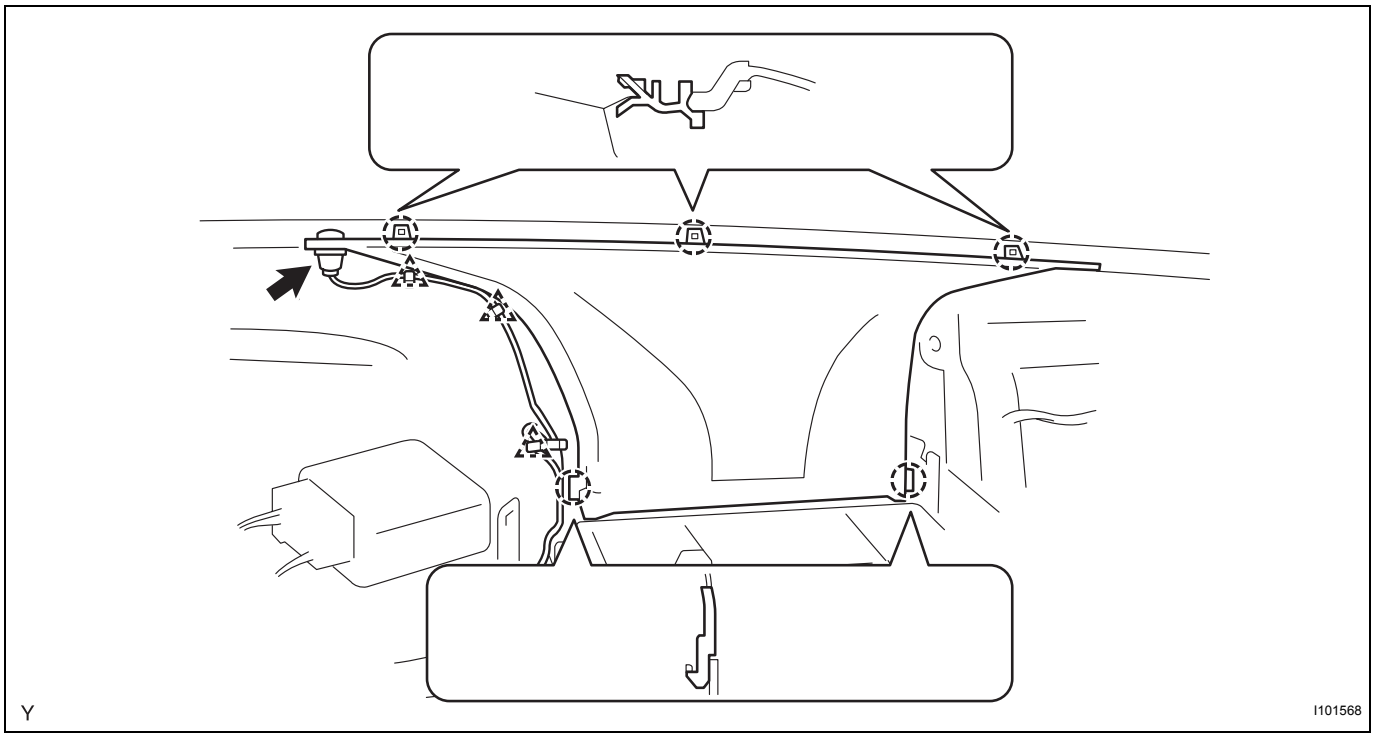

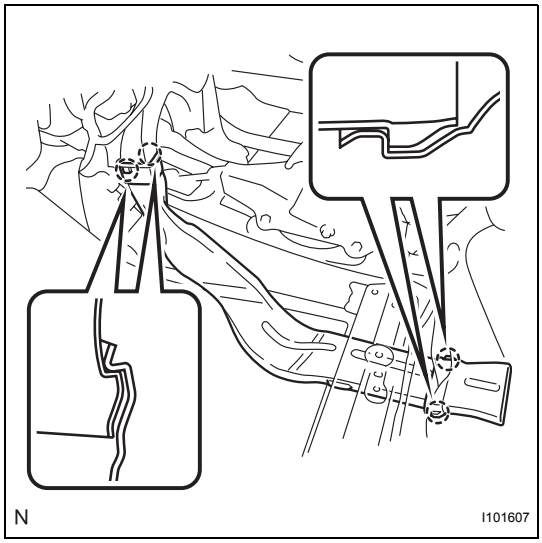

67. REMOVE REAR NO. 2 AIR DUCT (for Cold Area Specification Vehicles)

(a) Disengage the 4 claws and remove the air duct.

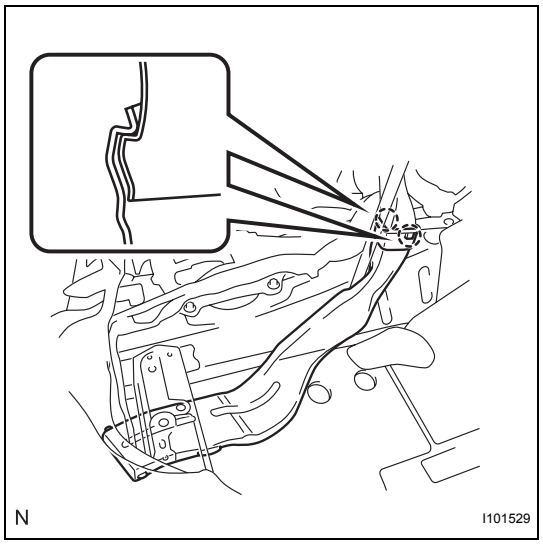

68. REMOVE REAR NO. 1 AIR DUCT (for Cold Area Specification Vehicles)

(a) Disengage the 2 claws and remove the air duct.

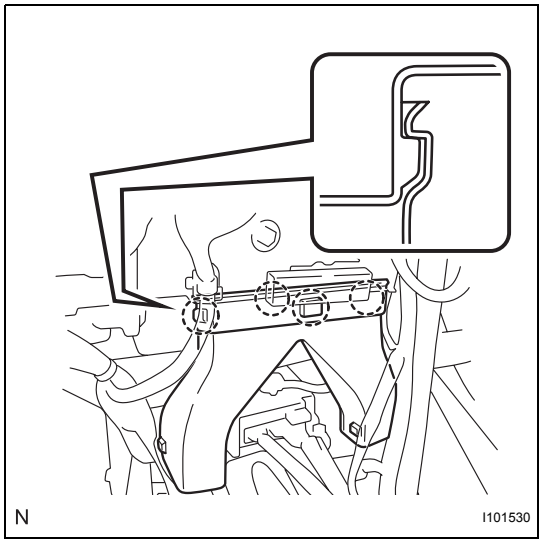

69. REMOVE REAR NO. 3 AIR DUCT (for Cold Area Specification Vehicles)

(a) Disengage the 4 claws and remove the air duct.

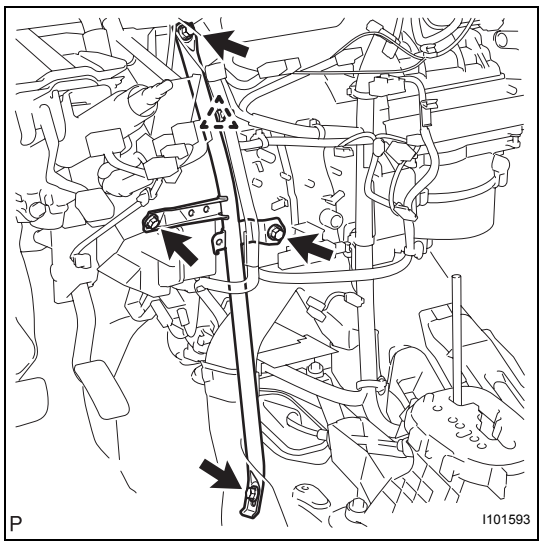

70. REMOVE INSTRUMENT PANEL BRACE SUB-ASSEMBLY

(a) Disengage the clamp.

(b) Remove 2 bolts, screw and nut and remove the instrument panel brace.

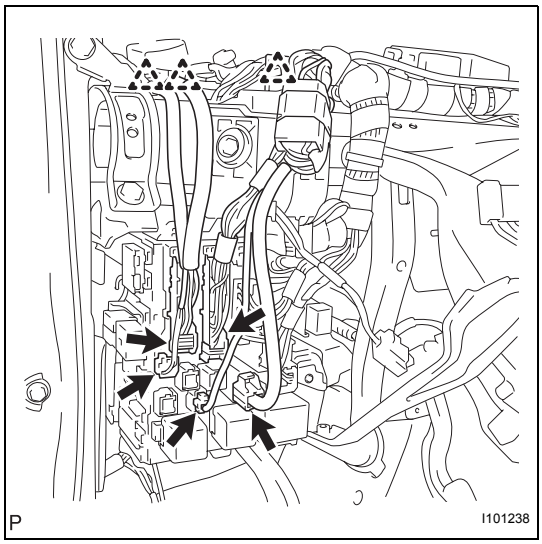

71. SEPARATE MAIN BODY ECU

(a) Disconnect the 5 connectors and 3 clamps.

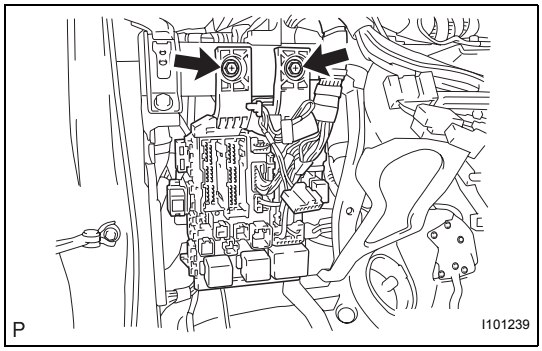

(b) Remove the 2 bolts and separate the main body ECU.

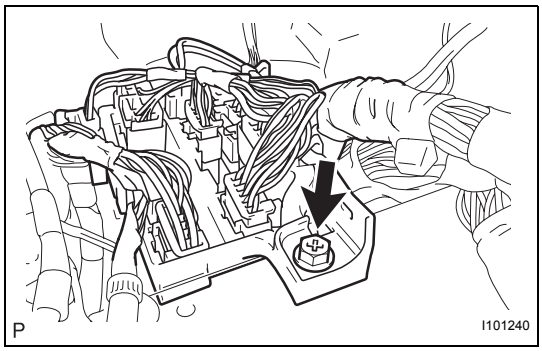

72. SEPARATE CONNECTOR NO. 2 HOLDER

(a) Remove the bolt.

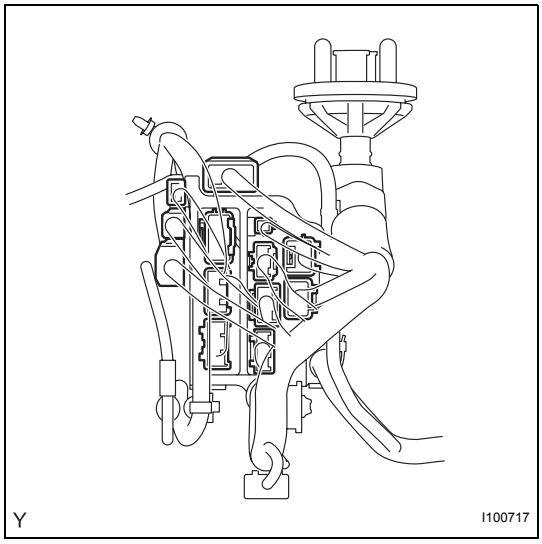

(b) Disconnect the connectors and separate the connector No. 2 holder.

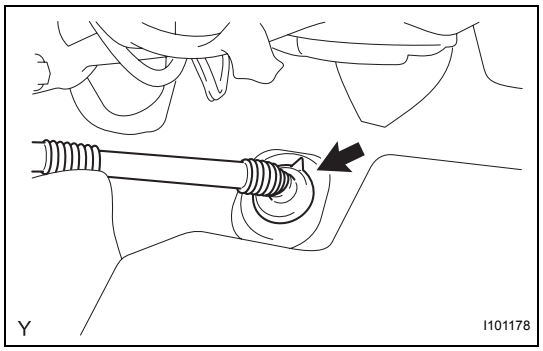

73. REMOVE INSTRUMENT PANEL REINFORCEMENT

(a) Disconnect the drain hose.

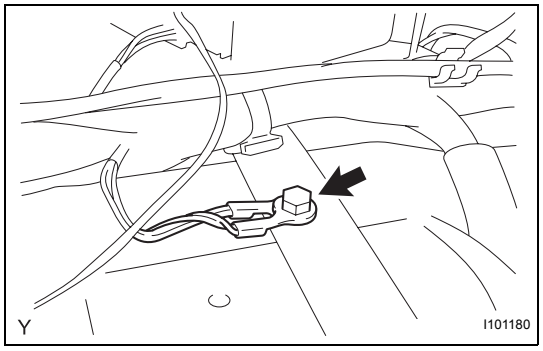

(b) Remove the bolt and disconnect the ground wire.

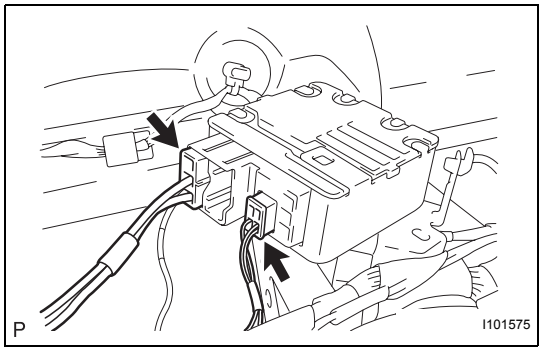

(c) Disconnect the connector.
(d) Disengage the clamps.

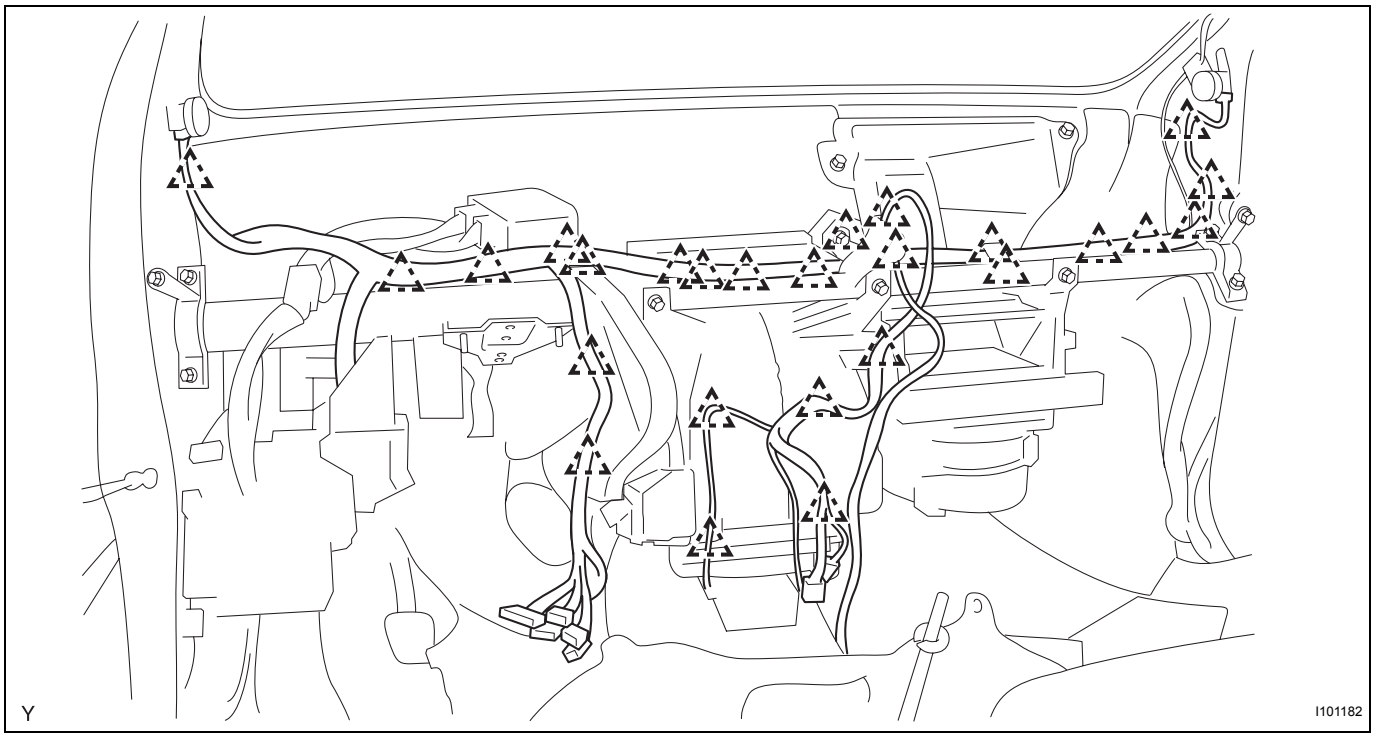

(e) Disconnect the connectors and clamps.

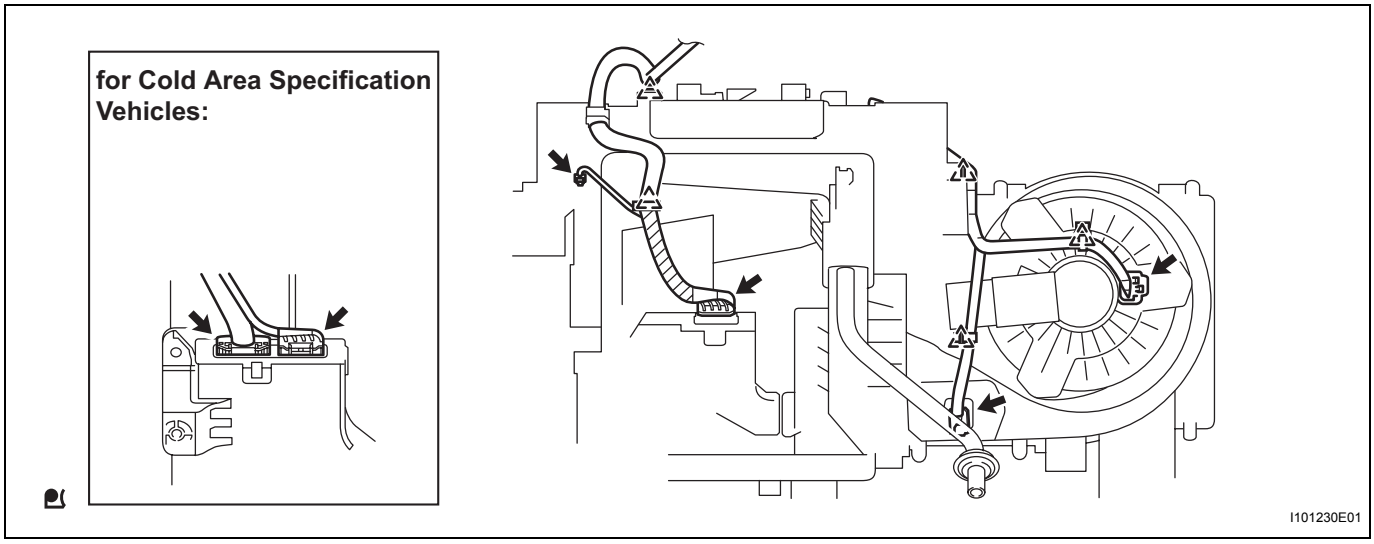

(f) Remove the 3 bolts and the nut.

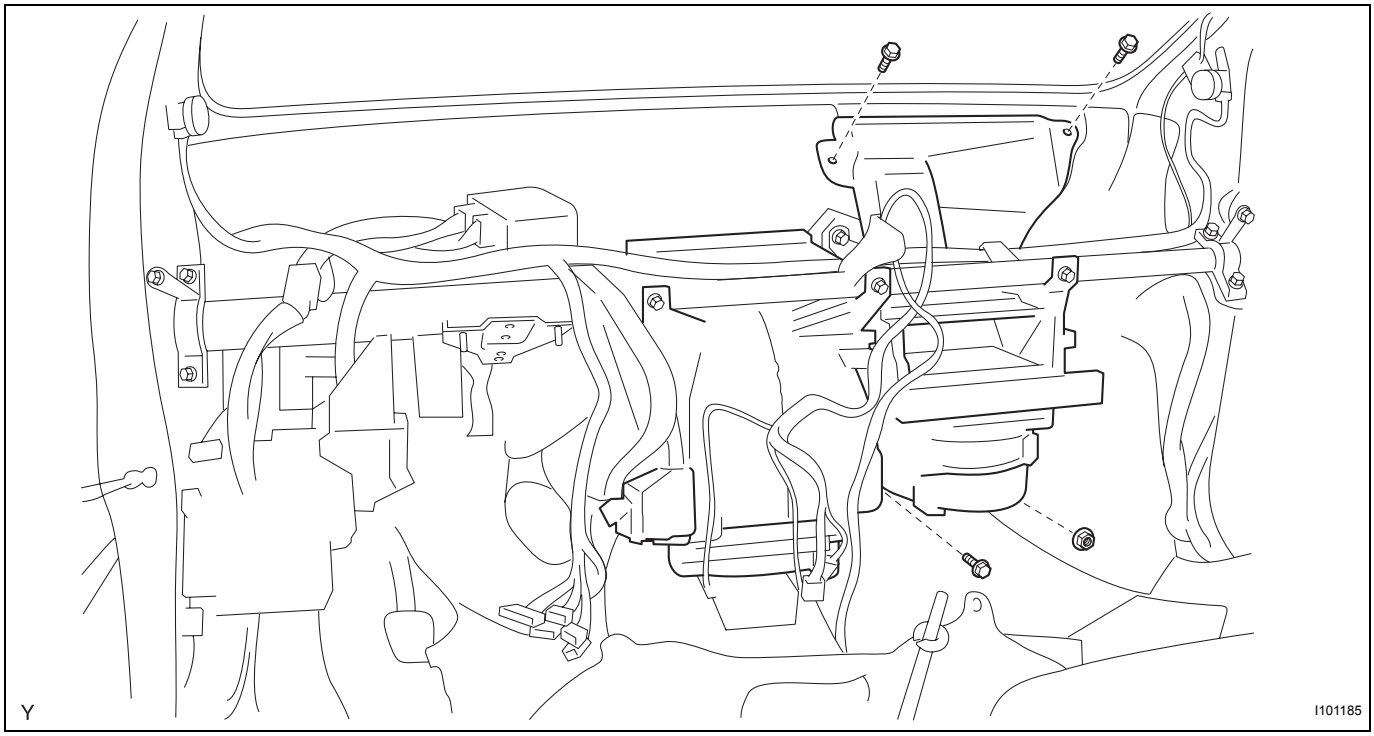

(g) Remove the 9 bolts and remove the instrument panel reinforcement together with the air conditioning unit.

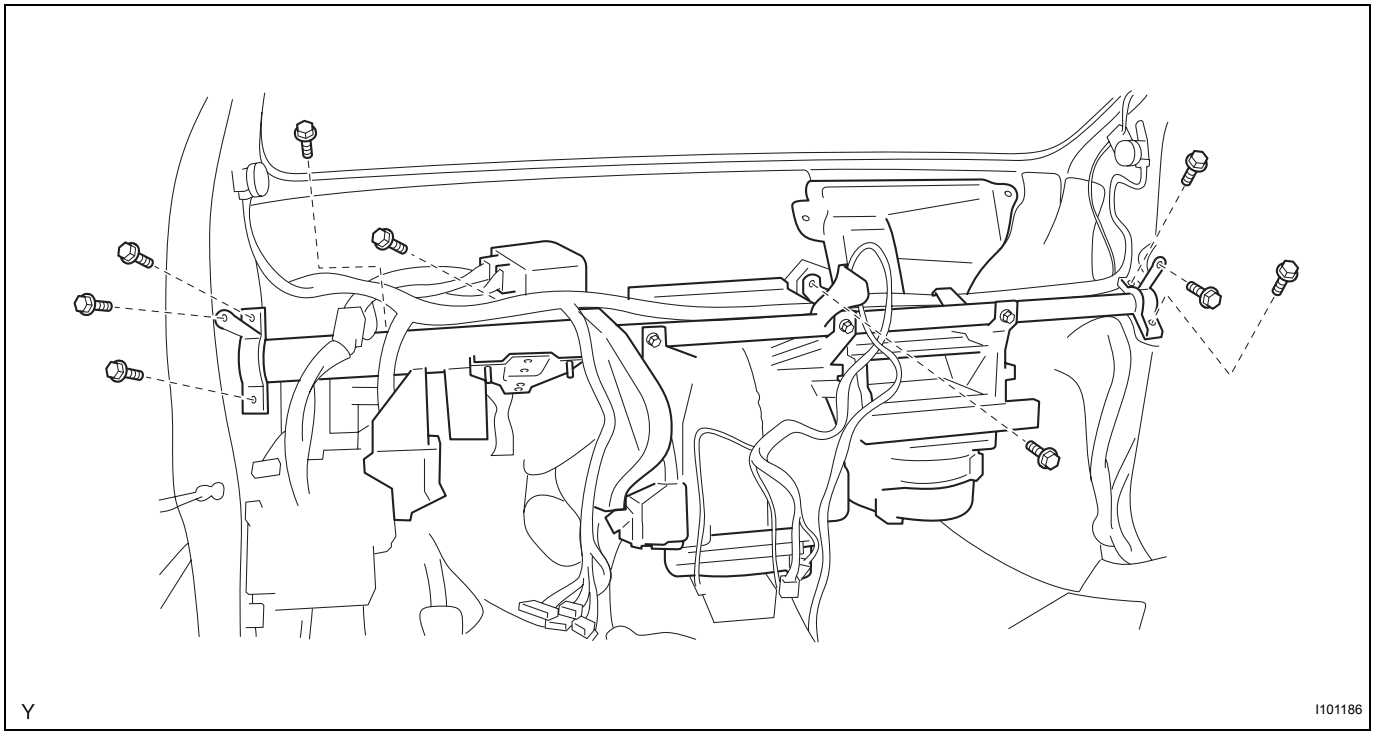

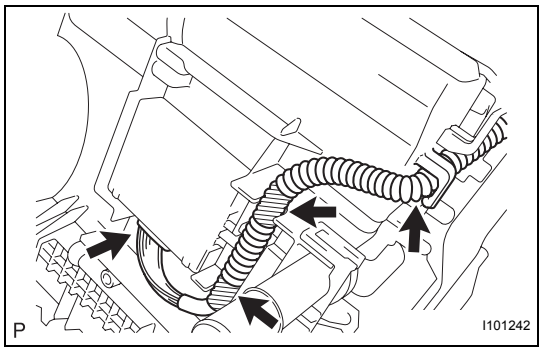

(h) Disconnect the connector and the 3 clamps.

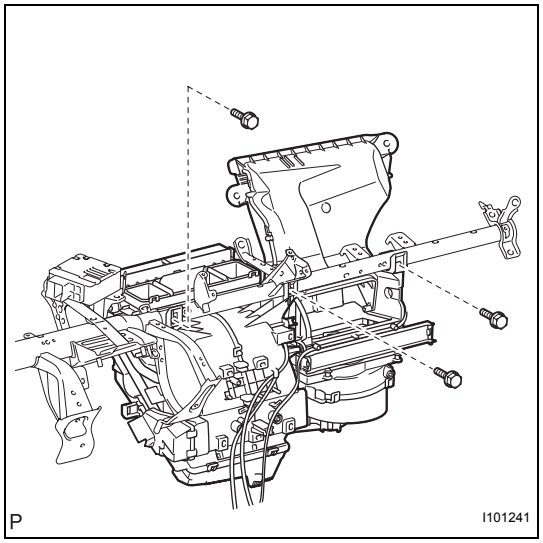

(i) Remove the 3 screws and the air conditioning unit.

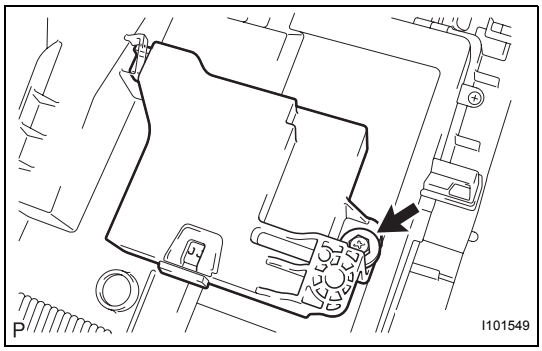

74. REMOVE AIR CONDITIONING AMPLIFIER ASSEMBLY

(a) Remove the screw and the air conditioning amplifier.

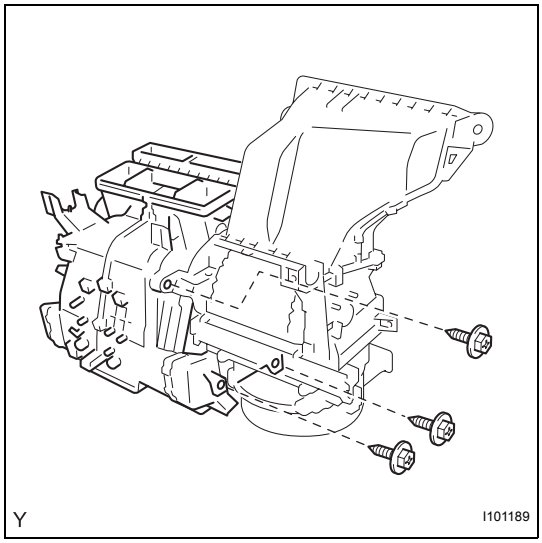

75. REMOVE AIR CONDITIONING UNIT

(a) Remove the 3 screws and the air conditioning unit.

DISASSEMBLY

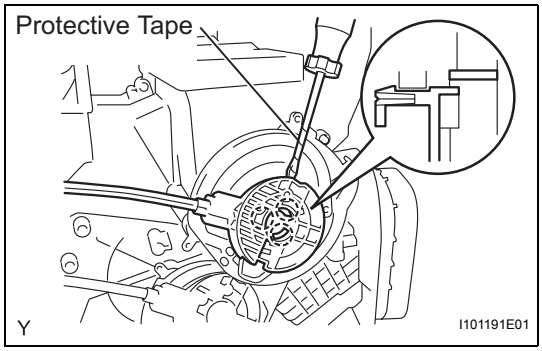

1. REMOVE DEFROSTER DAMPER CONTROL CABLE SUB-ASSEMBLY

(a) Using a screwdriver with its tip wrapped in protective tape, disengage the claw and remove the defroster damper control cable.

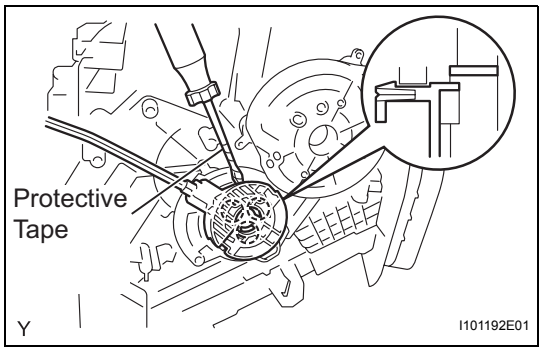

2. REMOVE AIR MIX DAMPER CONTROL CABLE SUB-ASSEMBLY

(a) Using a screwdriver with its tip wrapped in protective tape, disengage the claw and remove the air mix damper control cable.

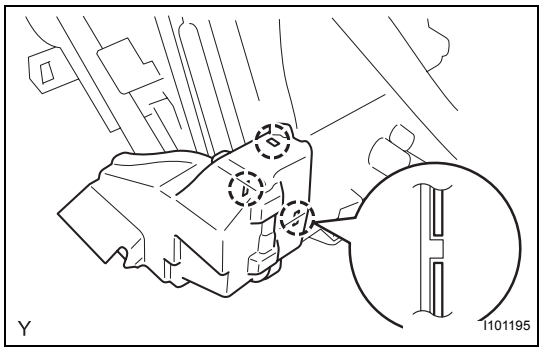

3. REMOVE NO. 1 AIR DUCT

(a) Disengage the 3 claws and remove the air duct.

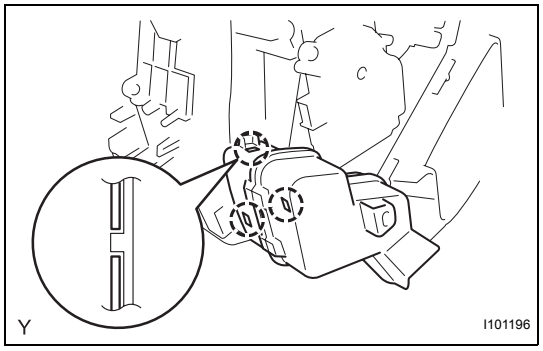

4. REMOVE NO. 2 AIR DUCT

(a) Disengage the 3 claws and remove the air duct.

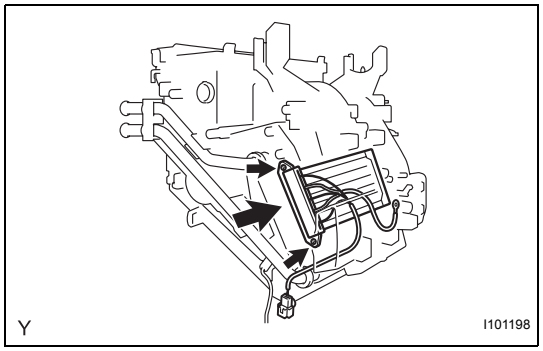

5. REMOVE PTC HEATER ASSEMBLY (for Cold Area Specification Vehicles)

(a) Remove the 2 screws and the PTC heater.

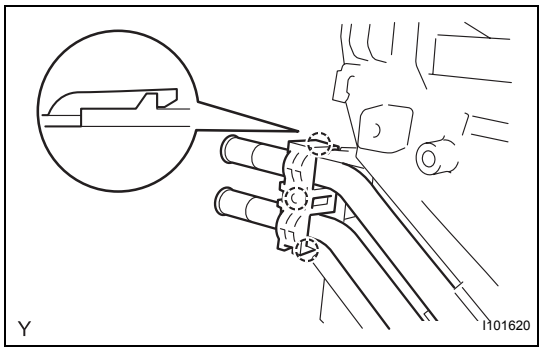

6. REMOVE HEATER RADIATOR UNIT SUB-ASSEMBLY

(a) Disengage the 3 claws and remove the clamp.

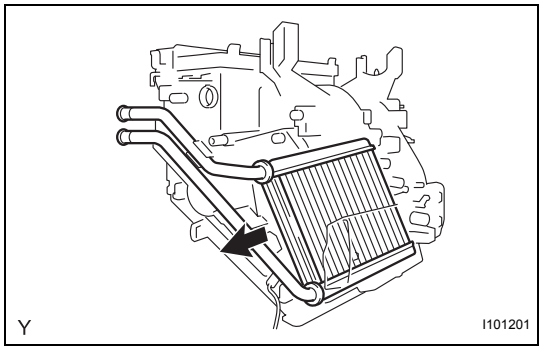

(b) Remove the heater radiator unit from the air conditioner radiator assembly.

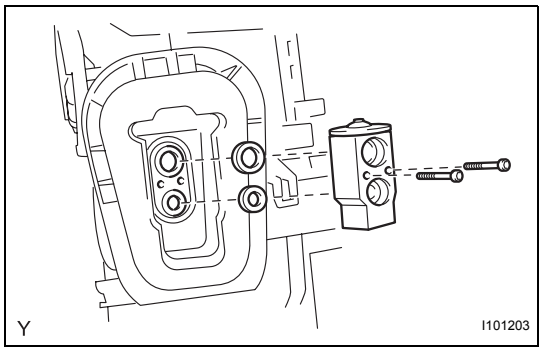

7. REMOVE COOLER EXPANSION VALVE

(a) Using a hexagon wrench 4, remove the 2 hexagon bolts and detach the cooler expansion valve.

(b) Remove the 2 O-rings from the cooler evaporator.

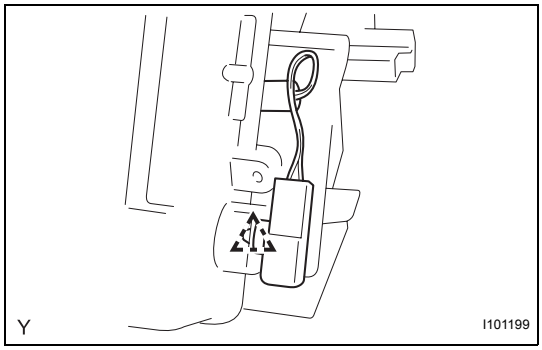

8. REMOVE NO. 1 COOLER EVAPORATOR SUB-ASSEMBLY

(a) Disengage the cooler thermistor connector.

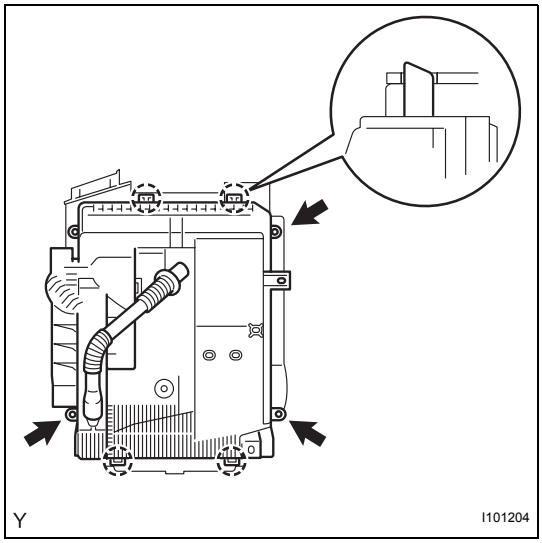

(b) Remove the 3 screws.

(c) Disengage the 4 claws and remove the heater case lower.

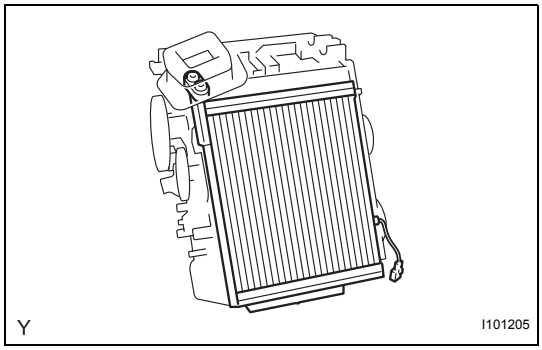

(d) Remove the cooler evaporator.

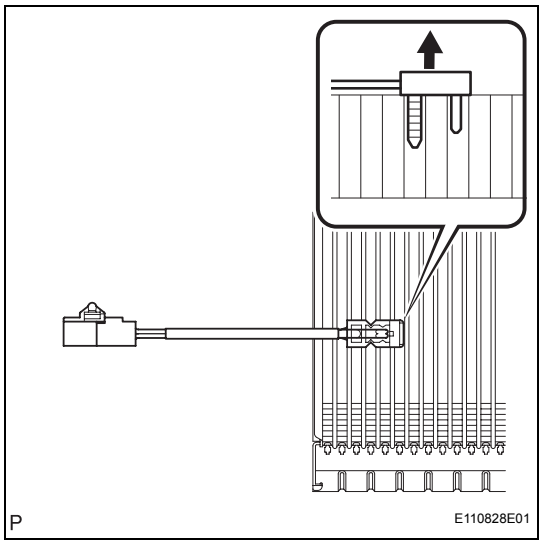

9. REMOVE NO. 1 COOLER THERMISTOR

(a) Remove the cooler thermistor from the cooler evaporator.

INSPECTION

1. INSPECT NO. 1 COOLER THERMISTOR

(a) Measure the resistance.

Standard resistance

Tester Connection	Condition	Specified Condition
1 - 2	-10°C (14°F)	7.30 to 9.10 kΩ
1 - 2	-5°C (23°F)	5.65 to 6.95 kΩ
1 - 2	0°C (32°F)	4.40 to 5.35 kΩ
1 - 2	5°C (41°F)	3.40 to 4.15 kΩ
1 - 2	10°C (50°F)	2.70 to 3.25 kΩ
1 - 2	15°C (59°F)	2.14 to 2.58 kΩ
1 - 2	20°C (68°F)	1.71 to 2.05 kΩ
1 - 2	25°C (77°F)	1.38 to 1.64 kΩ
1 - 2	30°C (86°F)	1.11 to 1.32 kΩ

NOTICE:

- **Touching the sensor even slightly may change the resistance value. Hold the connector of the sensor.**
- **When measuring the resistance, the temperature of the sensor and the cooler thermistor must be the same.**

HINT:

As the temperature increases, the resistance decreases (see the graph).

If the operation is not as specified, replace the cooler thermistor.

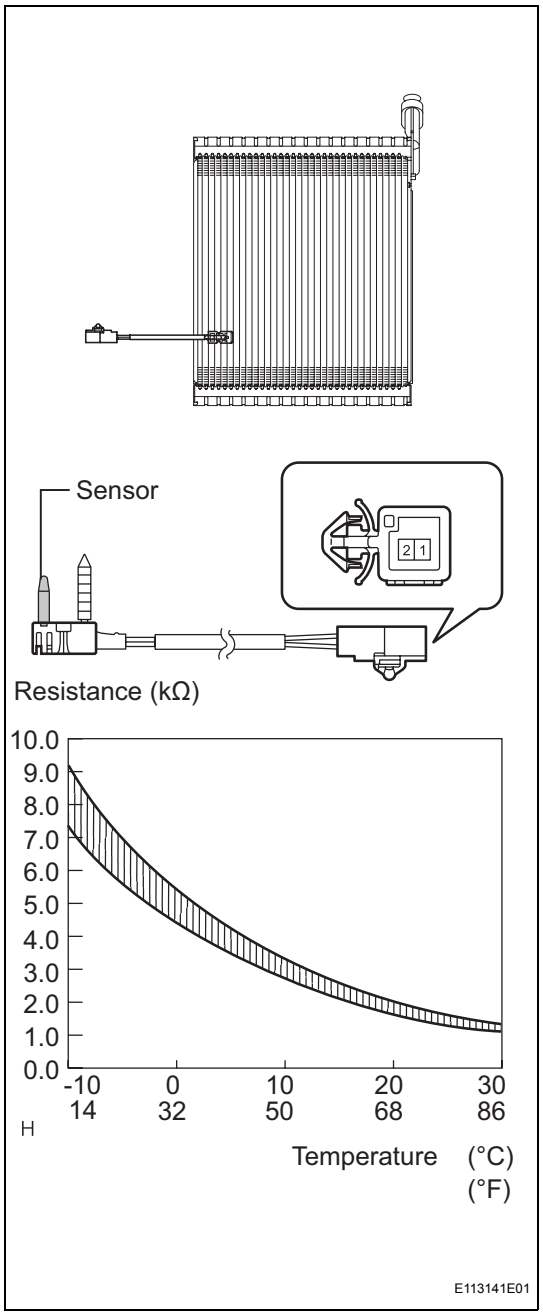

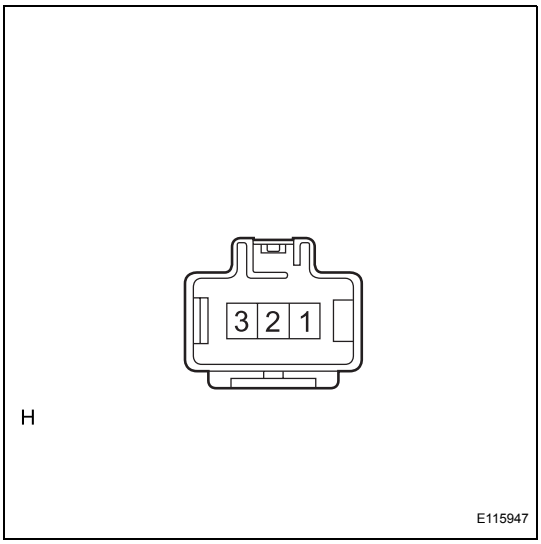

2. INSPECT PTC HEATER ASSEMBLY

(a) Measure the resistance.

Standard resistance

Tester Connection	Specified Condition
1 - 2	Below 1 Ω
2 - 3	Below 1 Ω
1 - 3	Below 1 Ω

If the resistance value is not as specified, replace the PTC heater assembly.

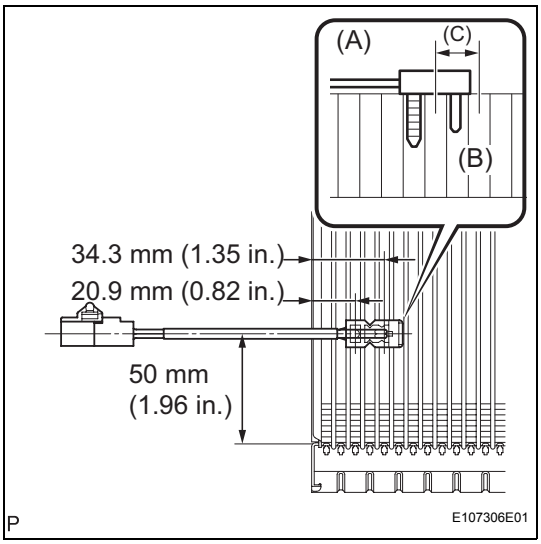

REASSEMBLY

1. INSTALL NO. 1 COOLER THERMISTOR

(a) Install the sensor onto the evaporator as shown in the illustration.

(b) Check that the sensor sticks to the evaporator surface as shown in the illustration (A: Sensor, B: Evaporator).

NOTICE:

If reusing the evaporator, do not reinsert the sensor in the same position that it was in before. Insert it within area C shown in the illustration.

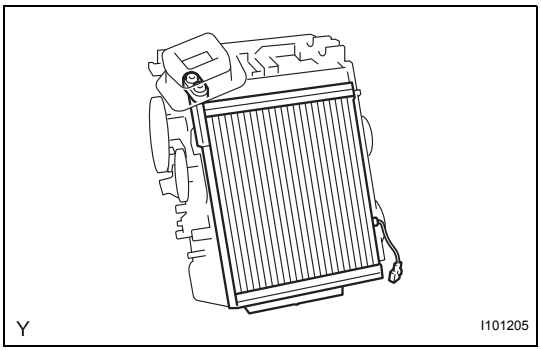

2. INSTALL NO. 1 COOLER EVAPORATOR SUB-ASSEMBLY

HINT:

If a new cooler evaporator is installed, add compressor oil to the cooler evaporator as follows.

Compressor oil:

ND-OIL8 or the equivalent. Add 40 cc (1.35 fl. oz.)

(a) Install the cooler evaporator.

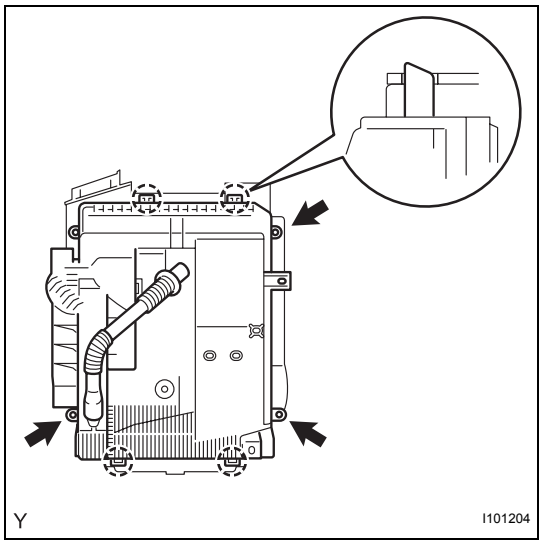

(b) Engage the 4 claws and install the heater case lower.
(c) Install the 3 screws.

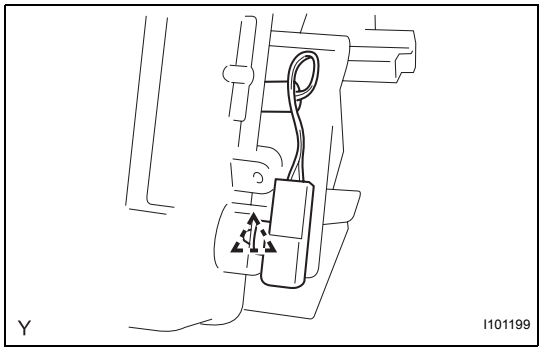

(d) Engage the cooler thermistor connector.

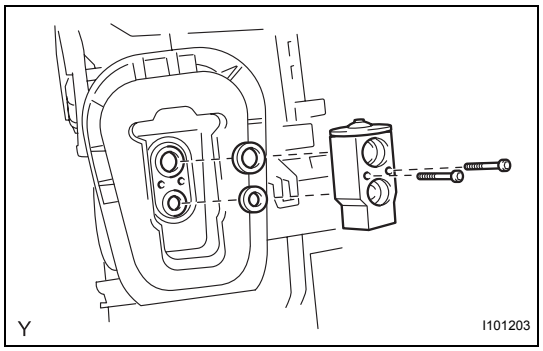

3. INSTALL COOLER EXPANSION VALVE

(a) Apply sufficient compressor oil (ND-OIL8) to 2 new O-rings and the fitting surface of the cooler expansion valve.
Compressor oil:
ND-OIL8 or the equivalent
(b) Install the 2 O-rings onto the cooler evaporator.
(c) Using a hexagon wrench 4, install the cooler expansion valve with the 2 hexagon bolts.
Torque: 3.5 N*m (36 kgf*cm, 31 in.*lbf)

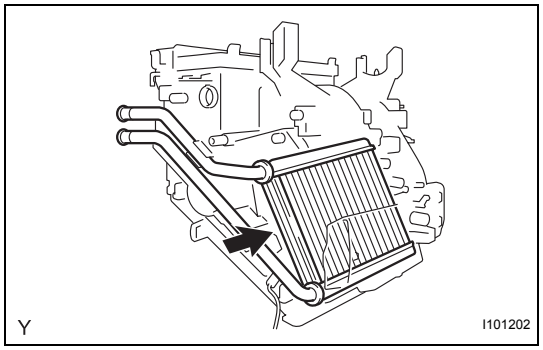

4. INSTALL HEATER RADIATOR UNIT SUB-ASSEMBLY

(a) Install the radiator heater unit onto the air conditioner radiator assembly.

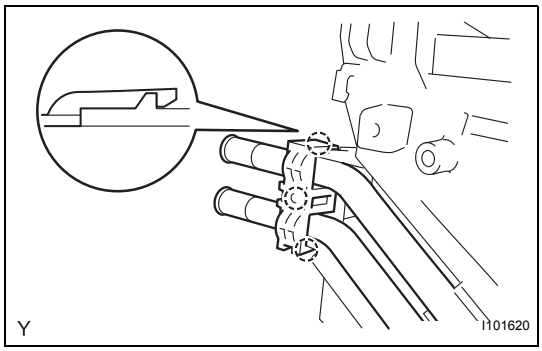

(b) Engage the 3 clips and install the clamp.

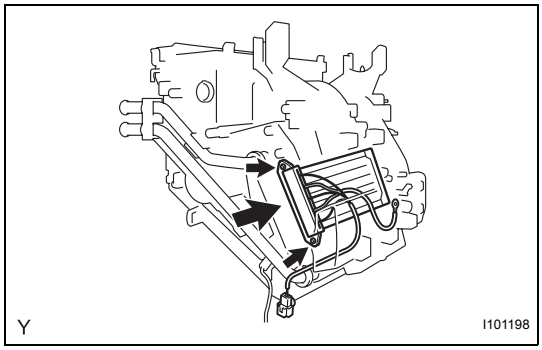

5. INSTALL PTC HEATER ASSEMBLY (for Cold Area Specification Vehicles)

(a) Install the PTC heater with the 2 screws.

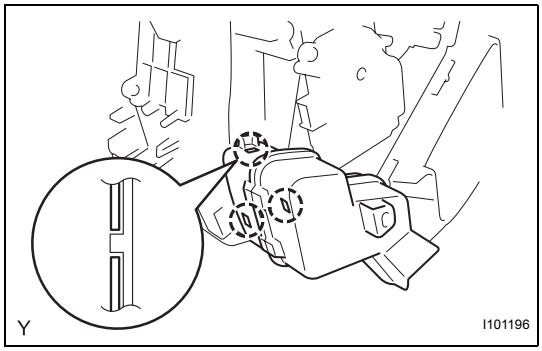

6. INSTALL NO. 2 AIR DUCT

(a) Engage the 3 claws and install the air duct.

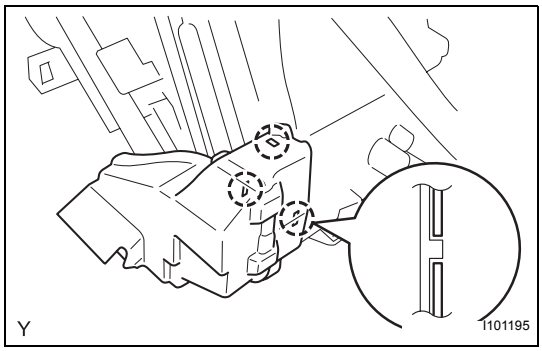

7. INSTALL NO. 1 AIR DUCT

(a) Engage the 3 claws and install the air duct.

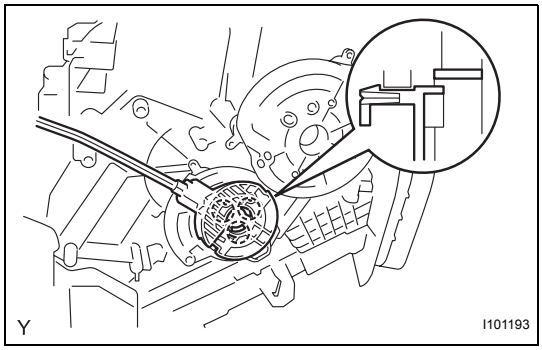

8. INSTALL AIR MIX DAMPER CONTROL CABLE SUB-ASSEMBLY

(a) Engage the claw and install the air mix damper control cable.

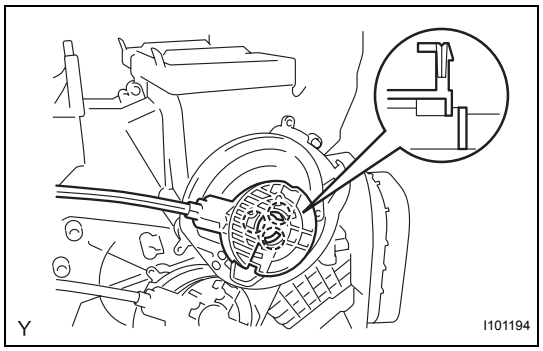

9. INSTALL DEFROSTER DAMPER CONTROL CABLE SUB-ASSEMBLY

(a) Engage the claw and install the defroster damper control cable.

INSTALLATION

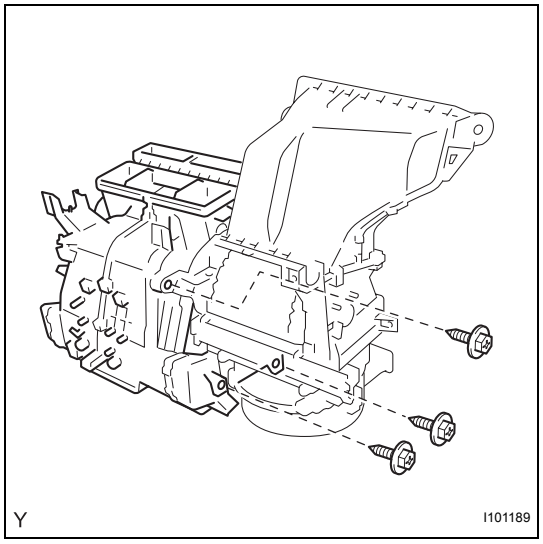

1. INSTALL AIR CONDITIONING UNIT

(a) Install the air conditioning unit with the 3 screws.

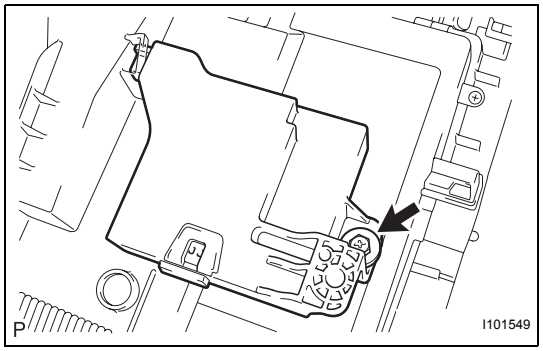

2. INSTALL AIR CONDITIONING AMPLIFIER ASSEMBLY

(a) Install the air conditioning amplifier with the screw.

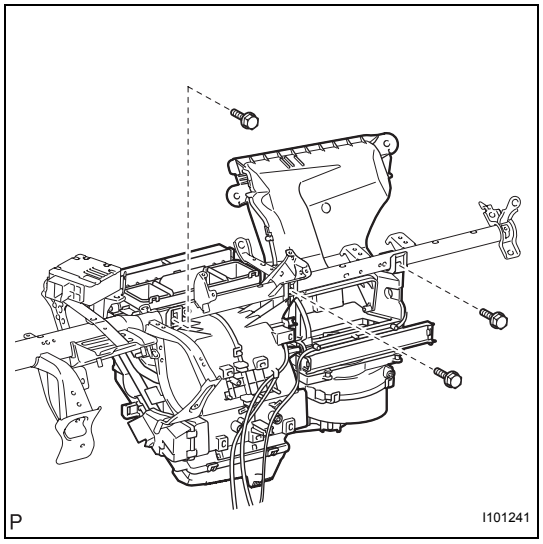

3. INSTALL INSTRUMENT PANEL REINFORCEMENT

(a) Provisionally tighten the air conditioning unit with the 3 screws.

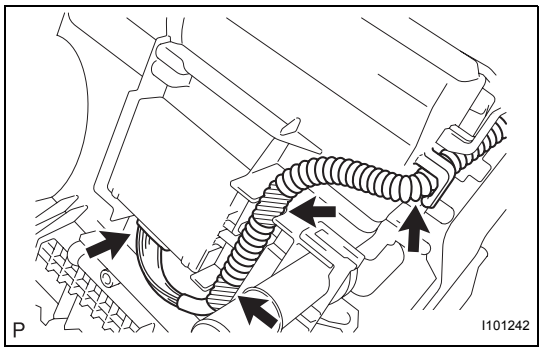

(b) Connect the connector and the 3 clamps.
(c) Install the instrument panel reinforcement and the air conditioning unit with the 9 bolts.

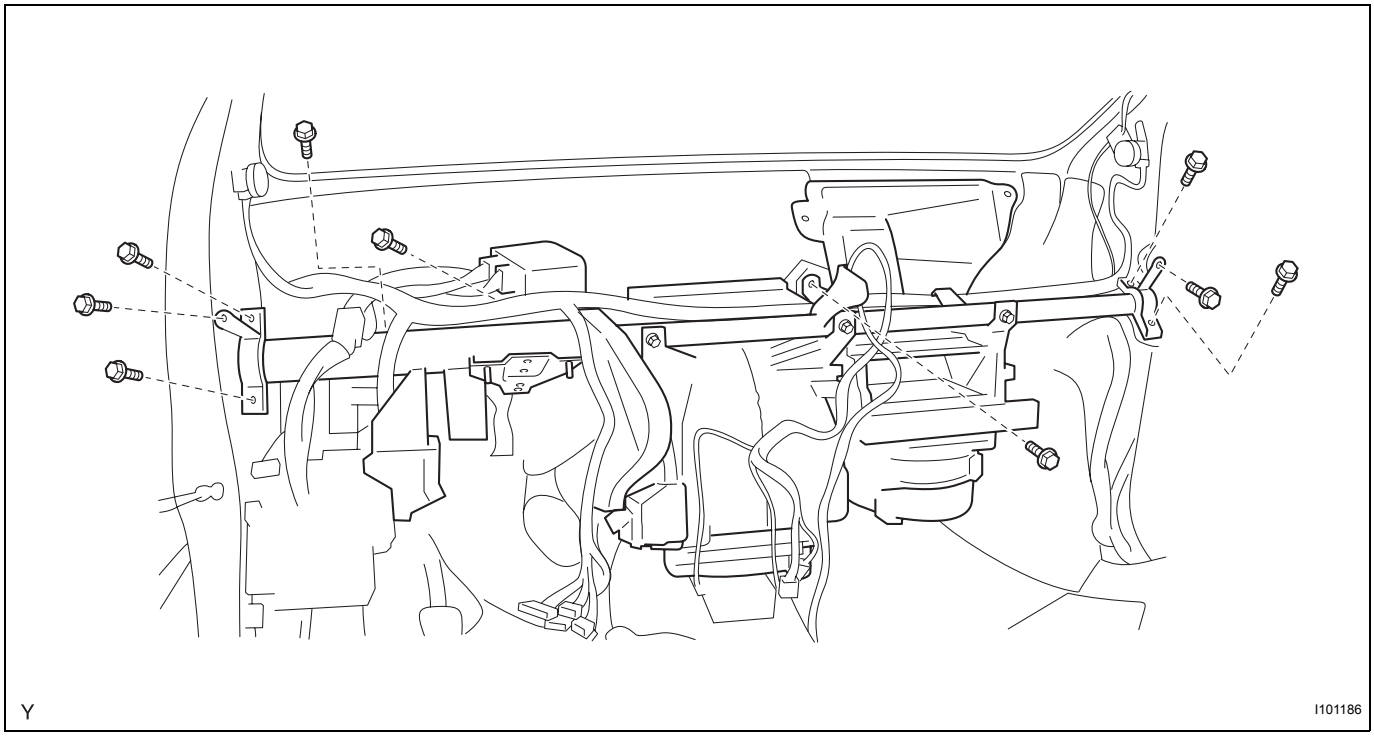

(d) Install the 3 screws, 3 bolts and nut in the sequence shown in the illustration.
Torque: 4.0 N*m (41 kgf*cm, 35 in.*lbf) for screw
9.8 N*m (100 kgf*cm, 87 in.*lbf) for nut
9.8 N*m (100 kgf*cm, 87 in.*lbf) for bolt

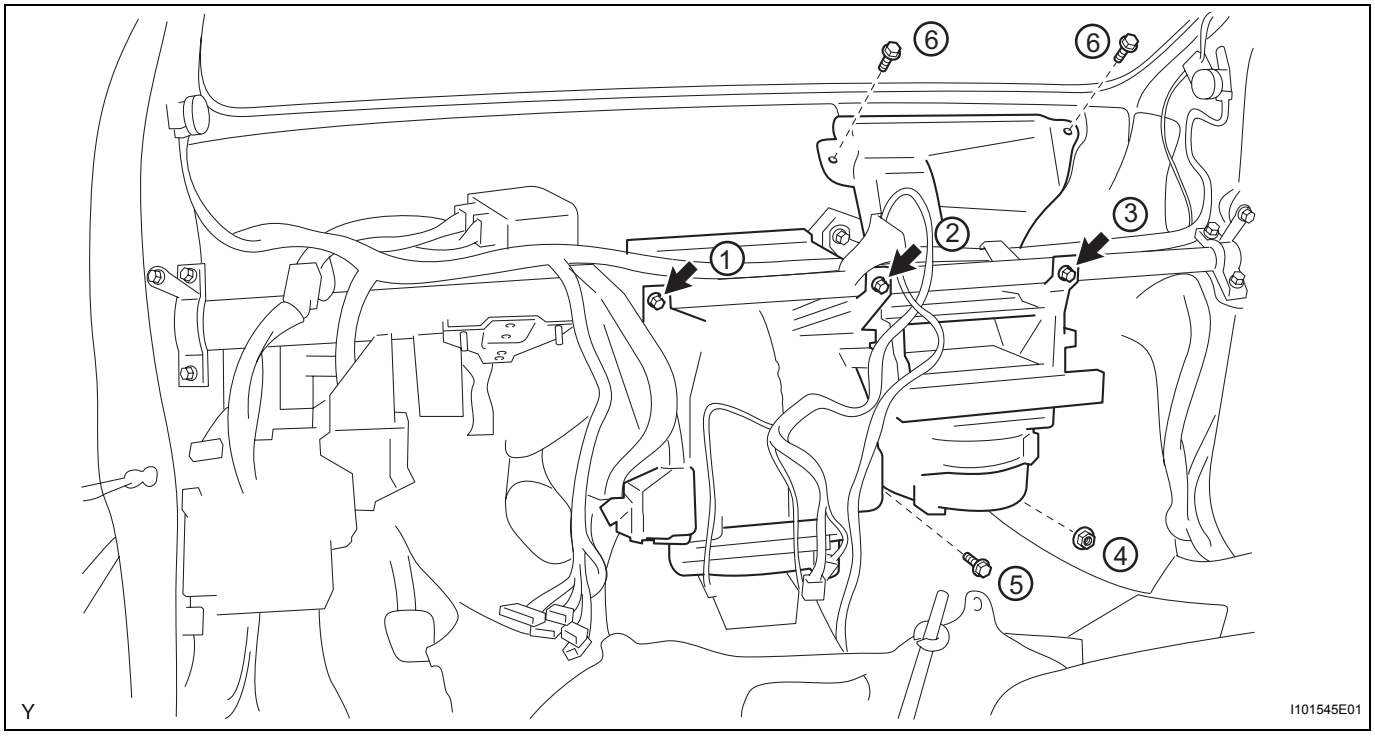

(e) Install the wire harness with the clamps and connectors.

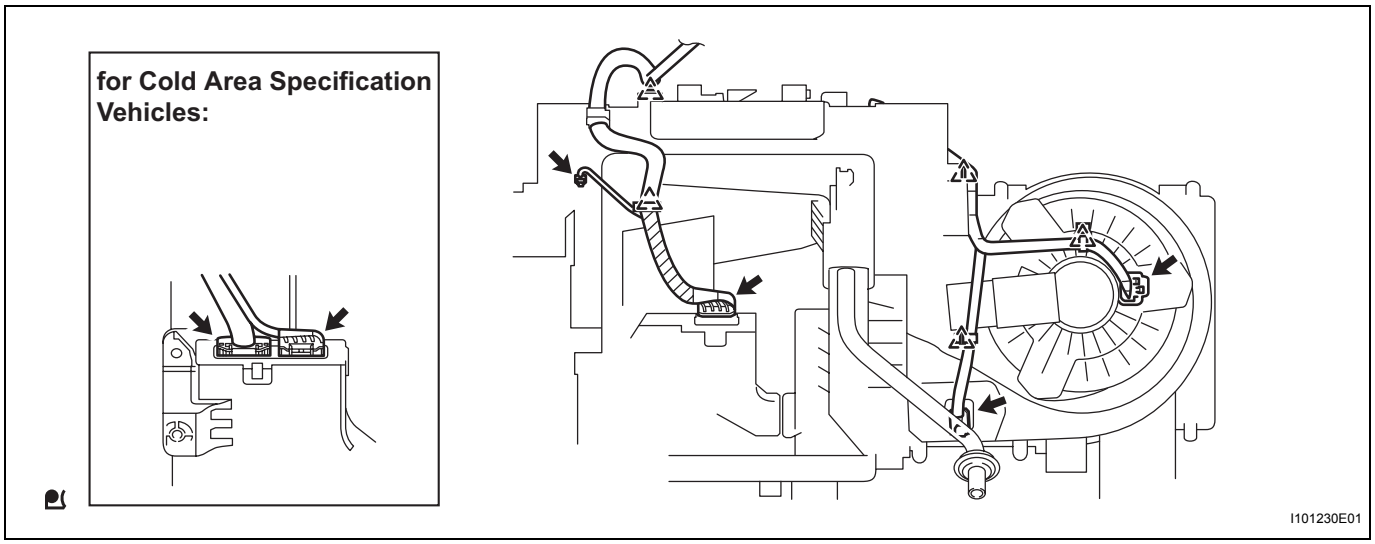

(f) Engage the clamps.

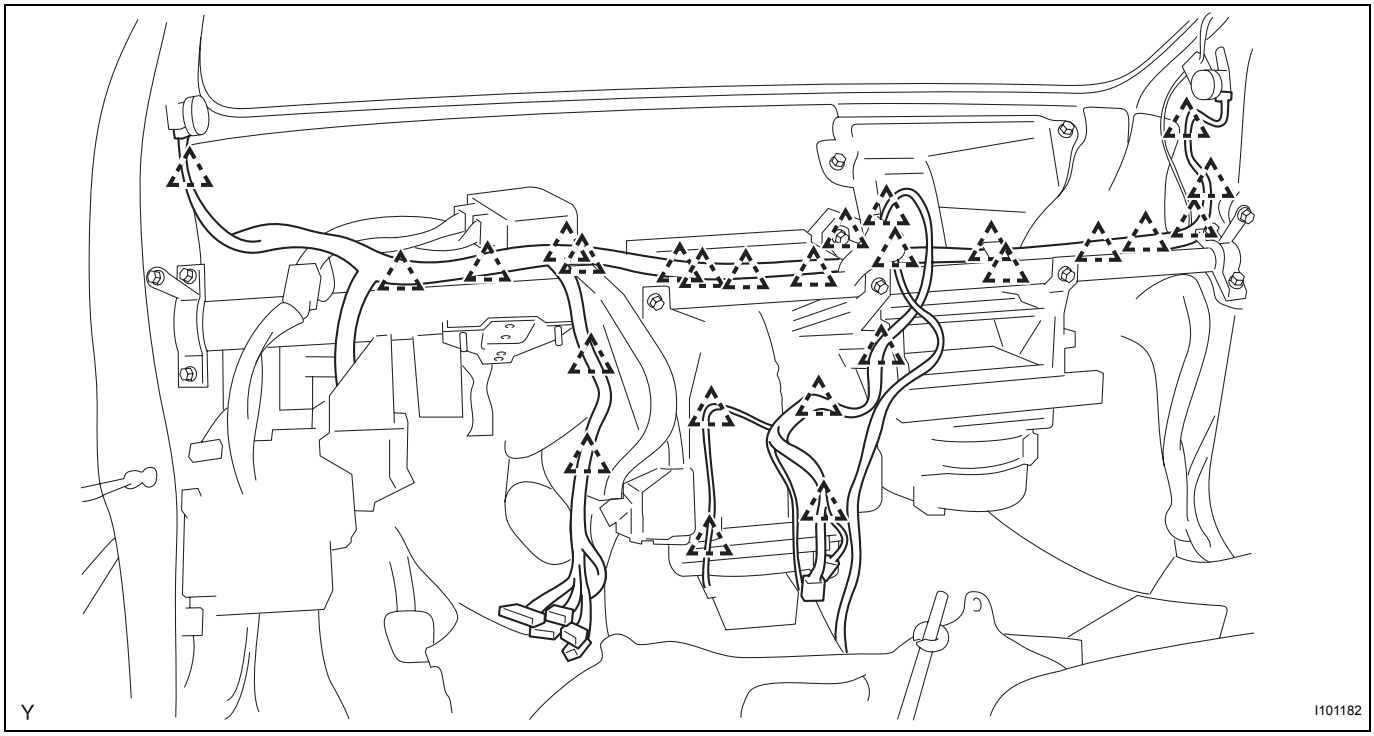

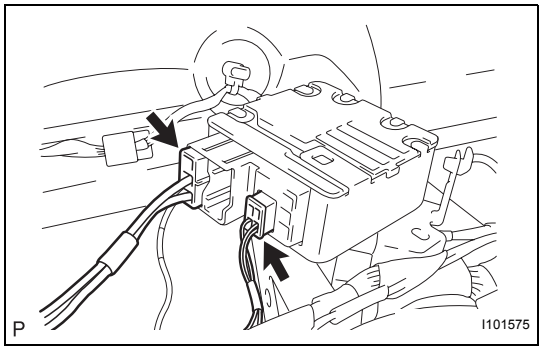

(g) Connect the connectors.

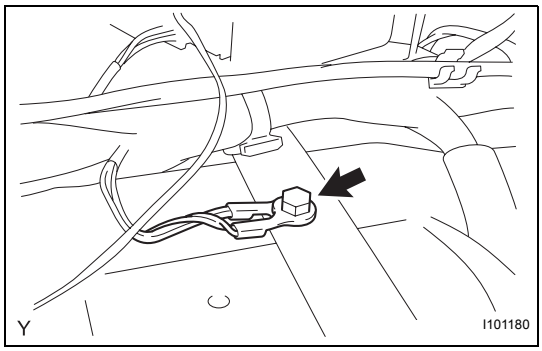

(h) Install the ground wire with the bolt.
Torque: 3.2 N*m (33 kgf*cm, 28 in.*lbf)

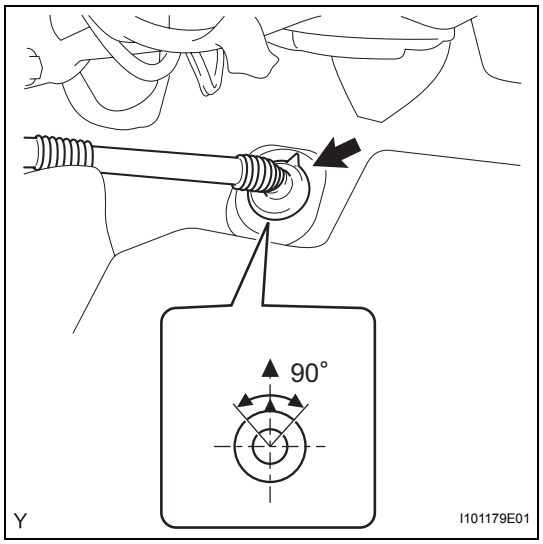

(i) Install the drain hose into the position shown in the illustration.
NOTICE:
- **Install the drain hose with its UP mark facing upward, within the 90 degree range shown in the illustration.**
- **Install the drain hose without twisting it.**

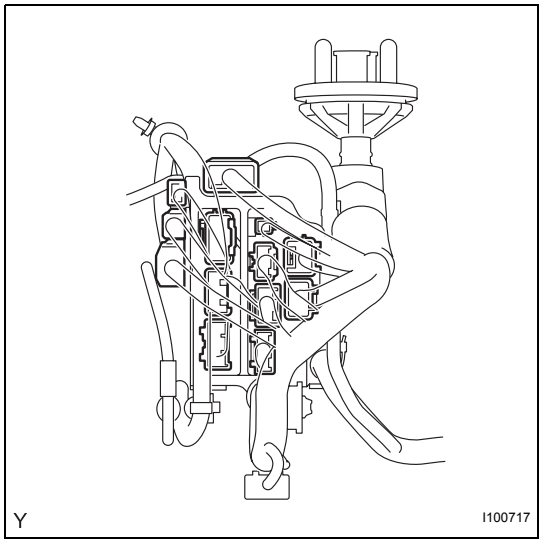

4. INSTALL CONNECTOR NO. 2 HOLDER

(a) Connect the connectors and install the wire harness.

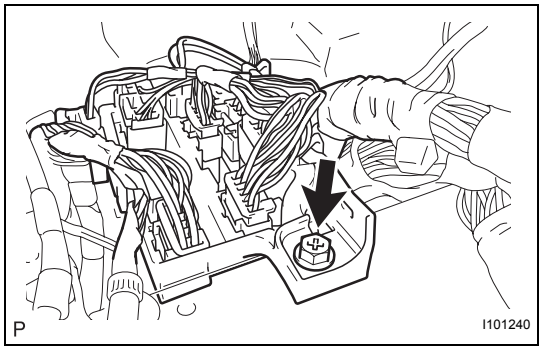

(b) Install the connector holder with the bolt.
Torque: 3.2 N*m (33 kgf*cm, 28 in.*lbf)

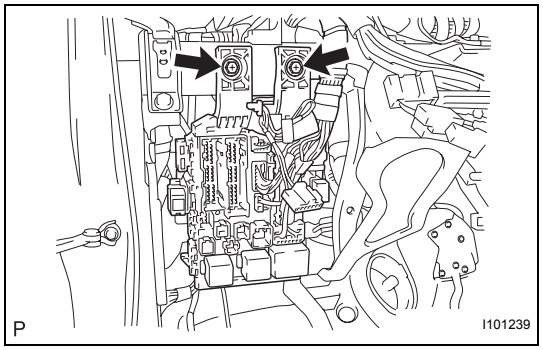

5. INSTALL MAIN BODY ECU

(a) Install the main body ECU with the 2 bolts.
Torque: 3.2 N*m (33 kgf*cm, 28 in.*lbf)

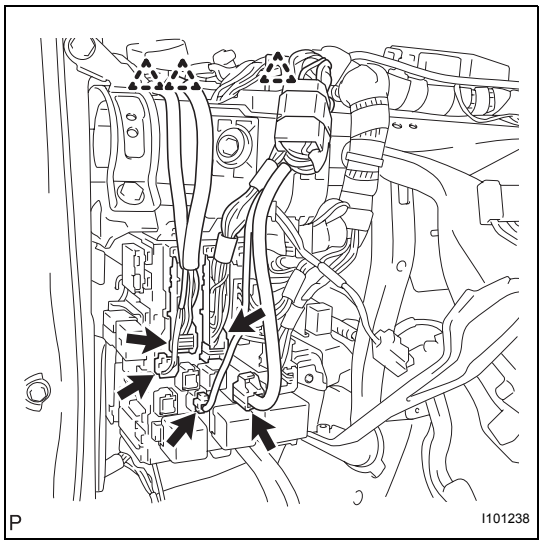

(b) Connect the 5 connectors and the 3 clamps.

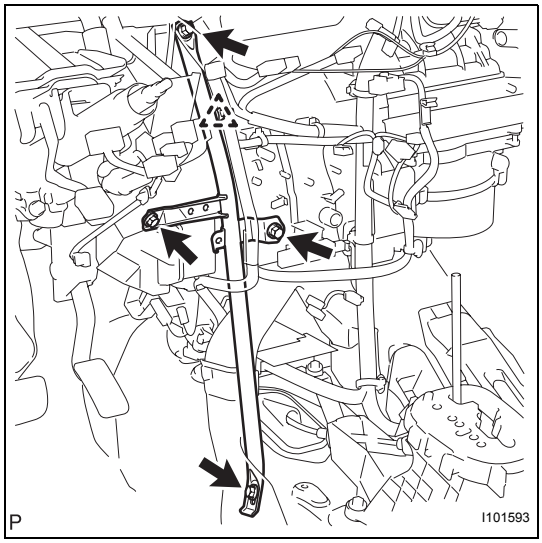

6. INSTALL INSTRUMENT PANEL BRACE SUB-ASSEMBLY

(a) Install the instrument panel brace with the 2 bolts, screw and nut.

Torque: 9.8 N*m (100 kgf*cm, 87 in.*lbf) for screw
9.8 N*m (100 kgf*cm, 87 in.*lbf) for nut
9.8 N*m (100 kgf*cm, 87 in.*lbf) for bolt

(b) Engage the clamp.

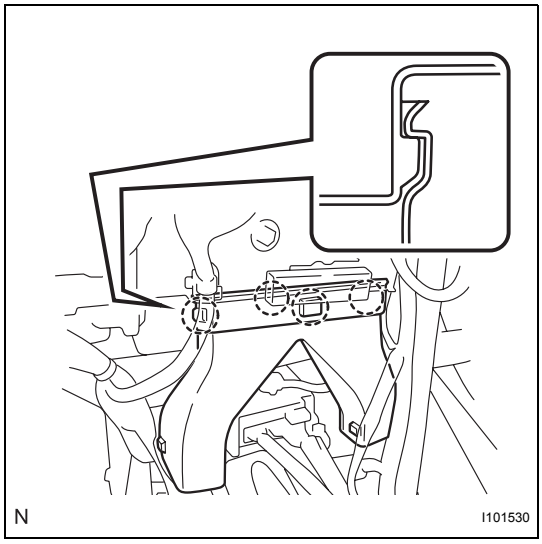

7. INSTALL REAR NO. 3 AIR DUCT (for Cold Area Specification Vehicles)

(a) Engage the 4 claws and install the air duct.

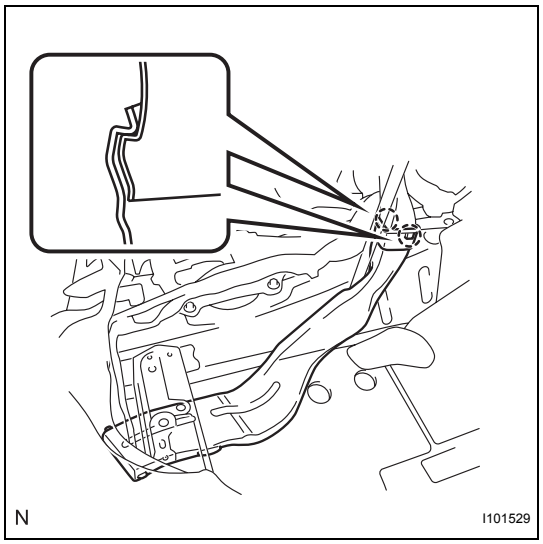

8. INSTALL REAR NO. 1 AIR DUCT (for Cold Area Specification Vehicles)

(a) Engage the 2 claws and install the air duct.

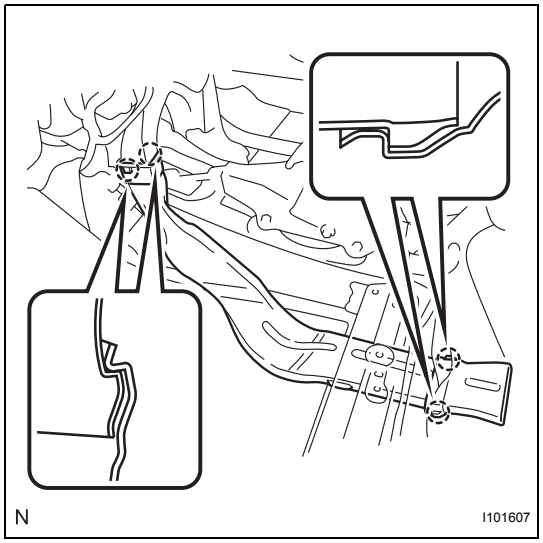

9. INSTALL REAR NO. 2 AIR DUCT (for Cold Area Specification Vehicles)

(a) Engage the 4 claws and install the air duct.

10. INSTALL DEFROSTER NOZZLE ASSEMBLY

(a) Engage the 5 claws and install the defroster nozzle.

(b) Connect the clamps and connectors and install the wire harness.

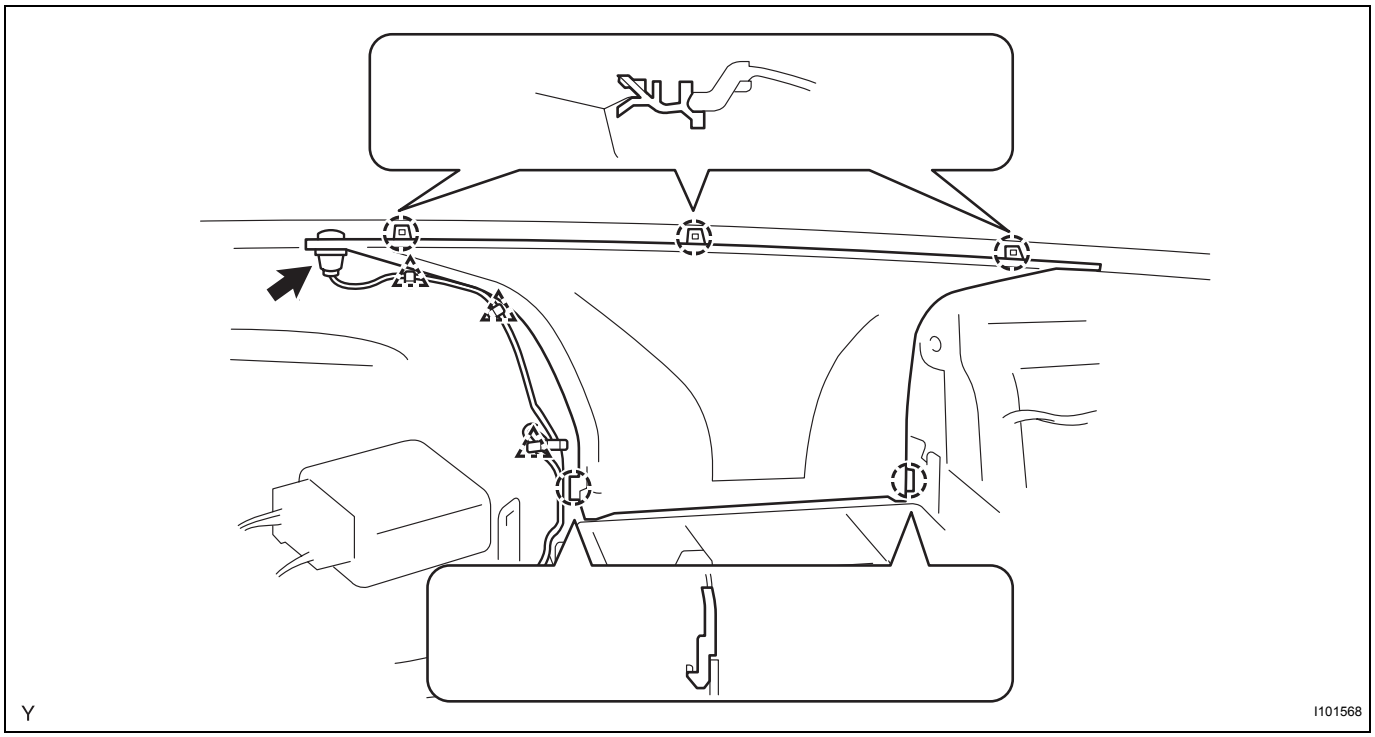

11. **INSTALL STEERING COLUMN ASSEMBLY (See page SR-38)**
12. **INSTALL BRAKE PEDAL SUPPORT SUB-ASSEMBLY (for Manual Transaxle) (See page BR-21)**
13. **INSTALL BRAKE MASTER CYLINDER PUSH ROD CLEVIS (for Manual Transaxle) (See page BR-21)**
14. **INSTALL BRAKE PEDAL (for Automatic Transaxle) (See page SR-38)**
15. **INSTALL STEERING SLIDING YOKE SUB-ASSEMBLY**
    (a) Align the matchmarks and install the sliding yoke onto the power steering assembly with bolt B.
    Torque: 28 N*m (286 kgf*cm, 21 ft.*lbf)
    (b) Tighten bolt A.
    Torque: 28 N*m (286 kgf*cm, 21 ft.*lbf)

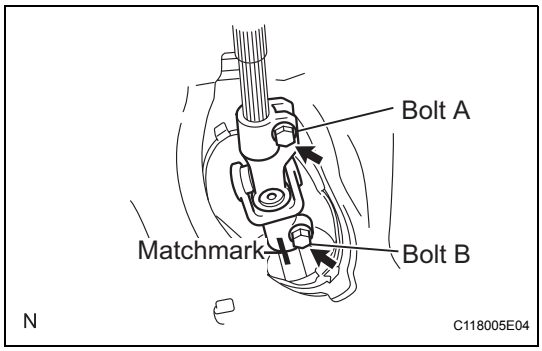

16. **INSTALL COLUMN HOLE COVER SILENCER SHEET (See page SR-39)**
17. **INSTALL INSTRUMENT PANEL SUB REINFORCEMENT (See page SR-39)**
18. **CONNECT POWER STEERING ECU ASSEMBLY (See page SR-39)**
19. **INSTALL COMBINATION SWITCH ASSEMBLY (See page SR-40)**
20. **INSTALL STEERING COLUMN COVER (See page SR-40)**
21. **INSTALL STEERING WHEEL ASSEMBLY (See page SR-41)**
22. **INSTALL STEERING PAD (See page RS-310)**
23. **INSTALL LOWER INSTRUMENT PANEL SUB-ASSEMBLY (See page IP-75)**
24. **CONNECT HOOD LOCK CONTROL LEVER SUB-ASSEMBLY (See page IP-77)**
25. **CONNECT ANTENNA CORD SUB-ASSEMBLY (See page IP-77)**
26. **INSTALL NO. 6 HEATER TO REGISTER DUCT ASSEMBLY (See page IP-77)**
27. **INSTALL INSTRUMENT PANEL BOX (See page IP-78)**
28. **INSTALL INSTRUMENT PANEL FINISH PANEL SUB-ASSEMBLY LOWER (See page IP-78)**
29. **INSTALL CONSOLE BOX ASSEMBLY REAR (See page IP-79)**
30. **INSTALL CONSOLE BOX CARPET (See page IP-79)**
31. **INSTALL CONSOLE BOX REAR COVER (See page IP-79)**

32. **INSTALL SHIFTING HOLE COVER SUB-ASSEMBLY (for Manual Transaxle) (See page IP-79)**
33. **INSTALL SHIFT LEVER KNOB SUB-ASSEMBLY (for Manual Transaxle) (See page IP-80)**
34. **INSTALL COWL SIDE TRIM BOARD RH (See page IR-81)**
35. **INSTALL COWL SIDE TRIM BOARD LH (See page IR-81)**
36. **INSTALL INSTRUMENT PANEL UNDER COVER SUB-ASSEMBLY LH (See page IR-82)**
37. **INSTALL INSTRUMENT PANEL UNDER COVER SUB-ASSEMBLY RH (See page IR-81)**
38. **INSTALL FRONT DOOR SCUFF PLATE RH (See page IR-82)**
39. **INSTALL FRONT DOOR SCUFF PLATE LH (See page IR-82)**
40. **INSTALL UPPER INSTRUMENT PANEL SUB-ASSEMBLY (See page IP-29)**
41. **INSTALL GLOVE COMPARTMENT DOOR ASSEMBLY (See page IP-32)**
42. **INSTALL NO. 1 SWITCH HOLE BASE (See page IP-32)**
43. **INSTALL FRONT PILLAR GARNISH RH (See page IR-71)**
44. **INSTALL FRONT PILLAR GARNISH LH (See page IR-72)**
45. **INSTALL FRONT DOOR OPENING TRIM WEATHERSTRIP RH (See page IR-81)**
46. **INSTALL FRONT DOOR OPENING TRIM WEATHERSTRIP LH (See page IR-81)**
47. **CONNECT AIR INLET DAMPER CONTROL CABLE SUB-ASSEMBLY (See page AC-257)**
48. **CONNECT DEFROSTER DAMPER CONTROL CABLE SUB-ASSEMBLY (See page AC-257)**
49. **CONNECT AIR MIX DAMPER CONTROL CABLE SUB-ASSEMBLY (See page AC-257)**
50. **INSTALL AIR CONDITIONER PANEL SUB-ASSEMBLY (See page AC-257)**

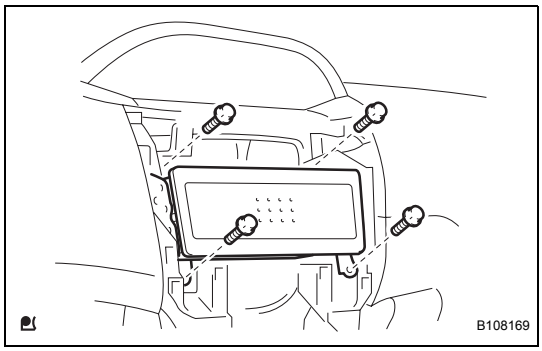

51. INSTALL RADIO TUNER OPENING COVER (w/o Radio Receiver)

(a) Install the radio tuner opening cover with the 4 bolts.

52. INSTALL RADIO RECEIVER ASSEMBLY (See page AV-46)

53. INSTALL INSTRUMENT CLUSTER FINISH PANEL SUB-ASSEMBLY CENTER (See page AC-258)

54. INSTALL COMBINATION METER ASSEMBLY (See page ME-148)

55. INSTALL INSTRUMENT CLUSTER FINISH PANEL (See page ME-148)

56. INSTALL INSTRUMENT PANEL FINISH PANEL END RH (See page ME-149)

57. INSTALL INSTRUMENT PANEL FINISH PANEL END LH (See page ME-149)

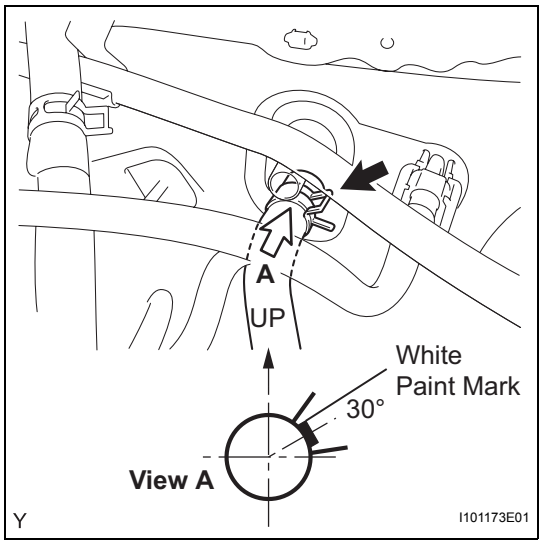

58. CONNECT HEATER WATER INLET HOSE A

(a) Install the heater water inlet hose onto the heater unit.

NOTICE:

Perform the installation with the hose clip and mark at the correct angle.

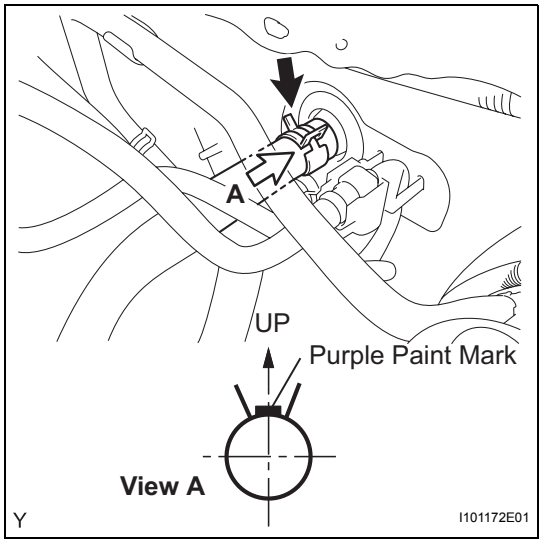

59. CONNECT HEATER WATER OUTLET HOSE A (FROM HEATER UNIT)

(a) Install the heater water outlet hose onto the heater unit.

NOTICE:

Perform the installation with the hose clip and mark at the correct angle.

60. INSTALL LIQUID TUBE SUB-ASSEMBLY

(a) Remove the vinyl tape from liquid tube and the connecting portion of the unit.

(b) Apply sufficient compressor oil (ND-OIL8) to a new O-ring and the connecting part of liquid tube.

Compressor oil:

ND-OIL8 or the equivalent

(c) Install the O-ring onto liquid tube.

(d) connect liquid tube to the unit.

61. INSTALL SUCTION TUBE SUB-ASSEMBLY

(a) Remove the vinyl tape from the suction tube and the connecting part of the unit.

(b) Apply sufficient compressor oil (ND-OIL8) to a new O-ring and the connecting part of suction tube.
Compressor oil:
ND-OIL8 or the equivalent

(c) Install the O-ring onto the suction tube.

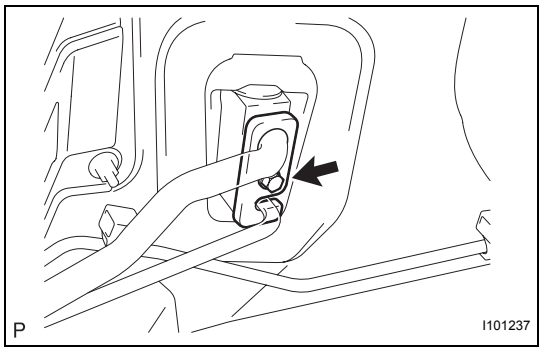

(d) Move the hook connector in the direction indicated by the arrow in the illustration.

(e) Insert the pipe joints securely into the fitting holes and tighten the bolt.
Torque: 9.8 N*m (100 kgf*cm, 87 in.*lbf)

62. INSTALL COWL TOP PANEL OUTER (See page EM-146)

63. INSTALL NO. 2 COWL TO REGISTER DUCT SUB-ASSEMBLY (See page EM-147)

64. INSTALL FRONT WIPER MOTOR AND LINK (See page WW-21)

65. INSTALL COWL TOP VENTILATOR LOUVER LH (See page WW-21)

66. INSTALL COWL TOP VENTILATOR LOUVER SUB-ASSEMBLY (See page WW-21)

67. INSTALL HOOD TO COWL TOP SEAL (See page WW-22)

68. INSTALL FRONT WIPER ARM AND BLADE ASSEMBLY LH (See page WW-22)

69. INSTALL FRONT WIPER ARM AND BLADE ASSEMBLY RH (See page WW-23)

70. INSTALL FRONT WIPER ARM HEAD CAP (See page WW-23)

71. ADD ENGINE COOLANT (See page CO-8)

72. CONNECT CABLE TO NEGATIVE BATTERY TERMINAL
Torque: 5.4 N*m (55 kgf*cm)

73. CHECK SRS WARNING LIGHT
RS-31

74. CHARGE REFRIGERANT (See page AC-67)

75. WARM UP ENGINE (See page AC-69)

76. CHECK FOR ENGINE COOLANT (See page CO-1)

77. CHECK FOR REFRIGERANT LEAK (See page AC-69)

78. POSITION FRONT WHEELS FACING STRAIGHT AHEAD

BLOWER UNIT (for Sedan)

COMPONENTS

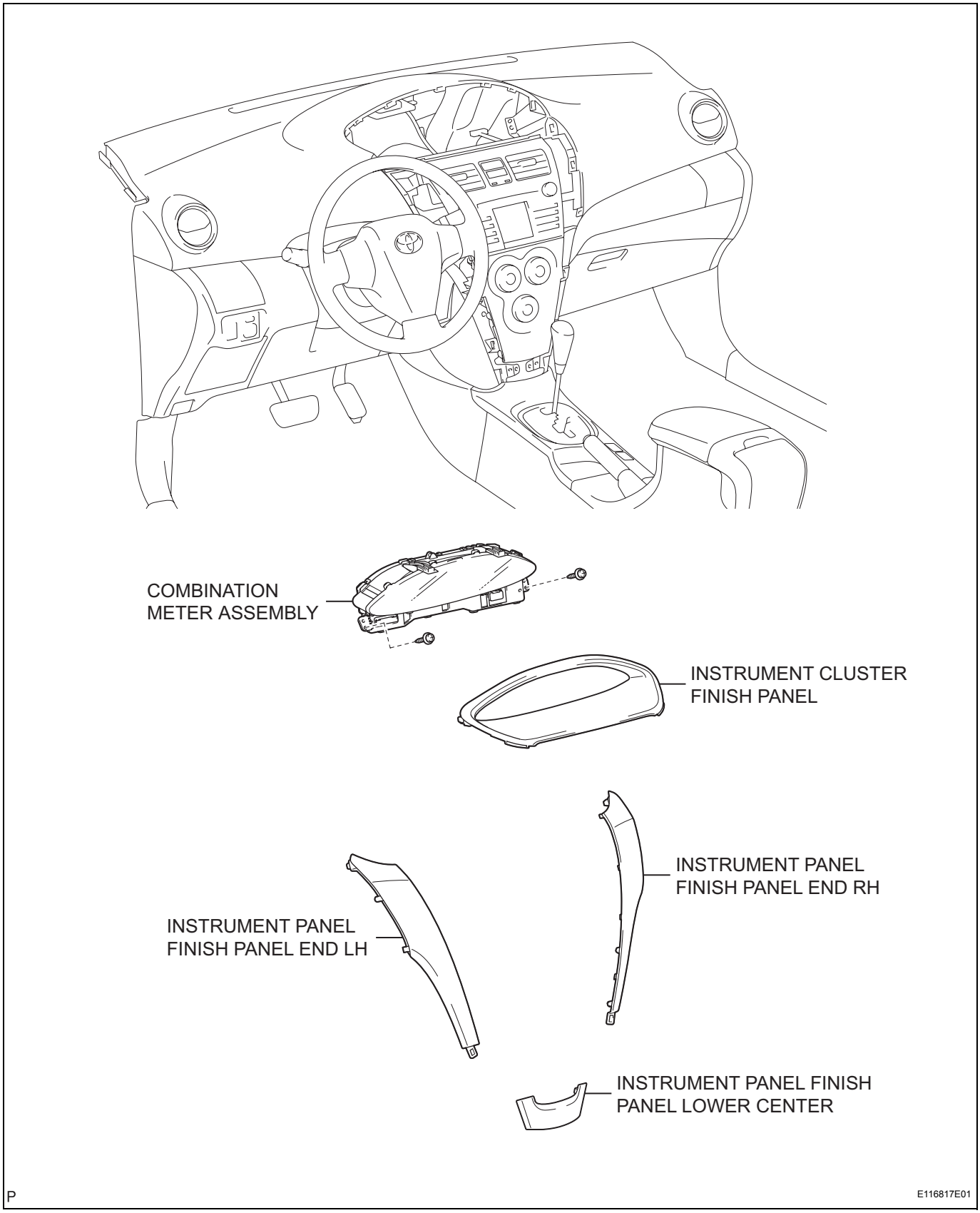

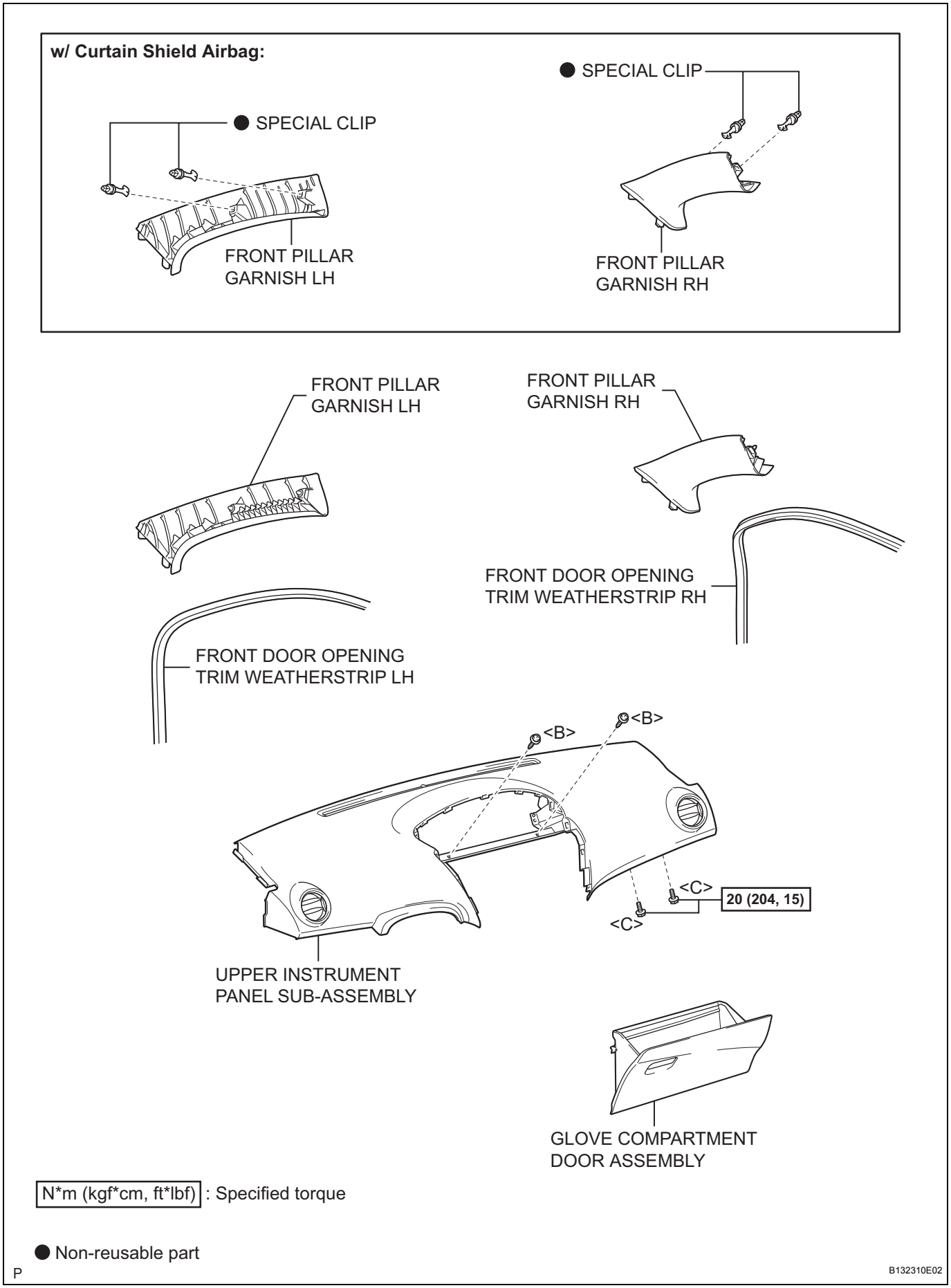
w/ Curtain Shield Airbag:
● SPECIAL CLIP
FRONT PILLAR GARNISH LH
● SPECIAL CLIP
FRONT PILLAR GARNISH RH
FRONT PILLAR GARNISH LH
FRONT PILLAR GARNISH RH
FRONT DOOR OPENING TRIM WEATHERSTRIP RH
FRONT DOOR OPENING TRIM WEATHERSTRIP LH
<B>
<B>
<C>
<C>
20 (204, 15)
UPPER INSTRUMENT PANEL SUB-ASSEMBLY
GLOVE COMPARTMENT DOOR ASSEMBLY
N*m (kgf*cm, ft*lbf) : Specified torque
● Non-reusable part
P
B132310E02

for Integrated w/ Panel:

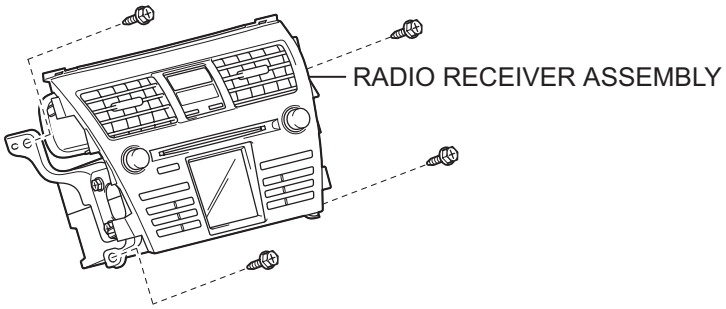

w/o Radio Receiver:

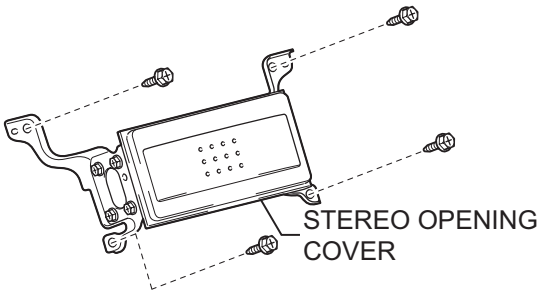

Except for Integrated w/ Panel:

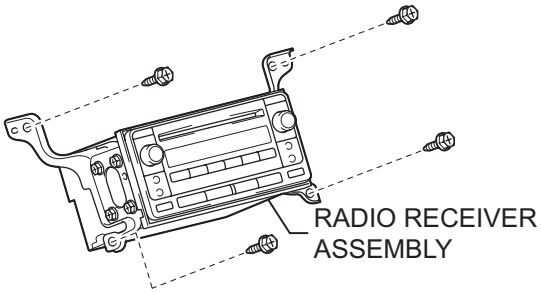

Except for Integrated w/ Panel:

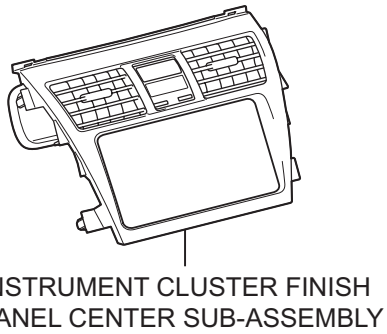

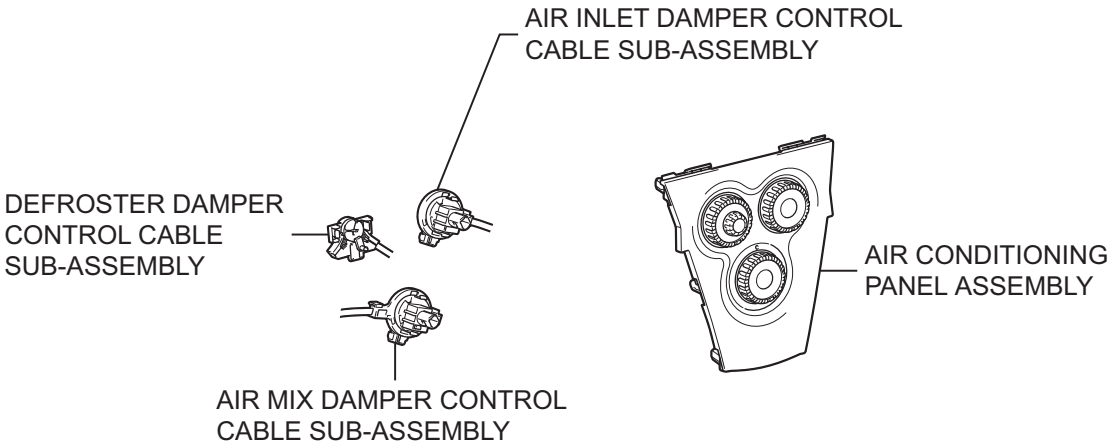

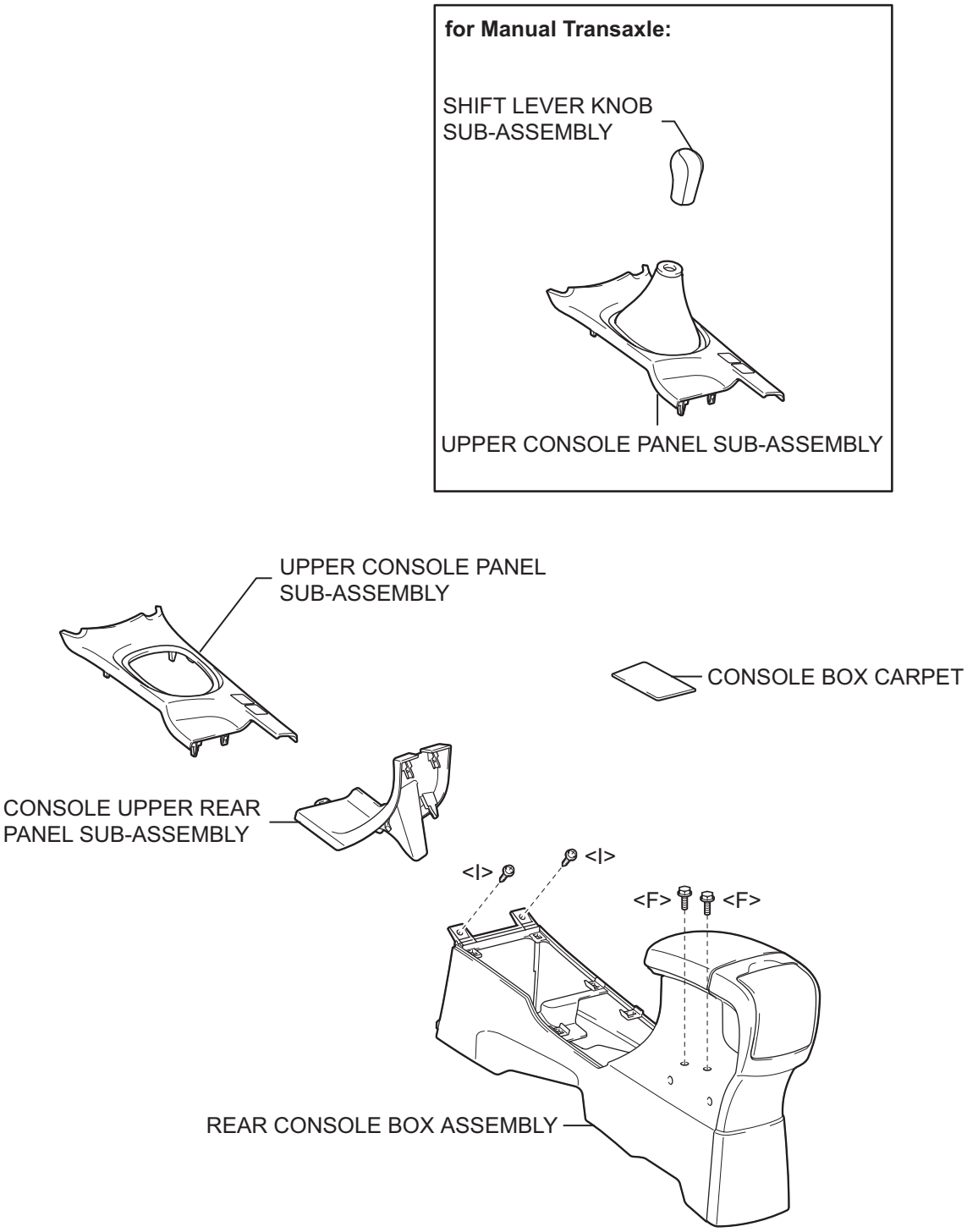
for Manual Transaxle:
SHIFT LEVER KNOB SUB-ASSEMBLY
UPPER CONSOLE PANEL SUB-ASSEMBLY
UPPER CONSOLE PANEL SUB-ASSEMBLY
CONSOLE BOX CARPET
CONSOLE UPPER REAR PANEL SUB-ASSEMBLY
<I>
<I>
<F>
<F>
REAR CONSOLE BOX ASSEMBLY

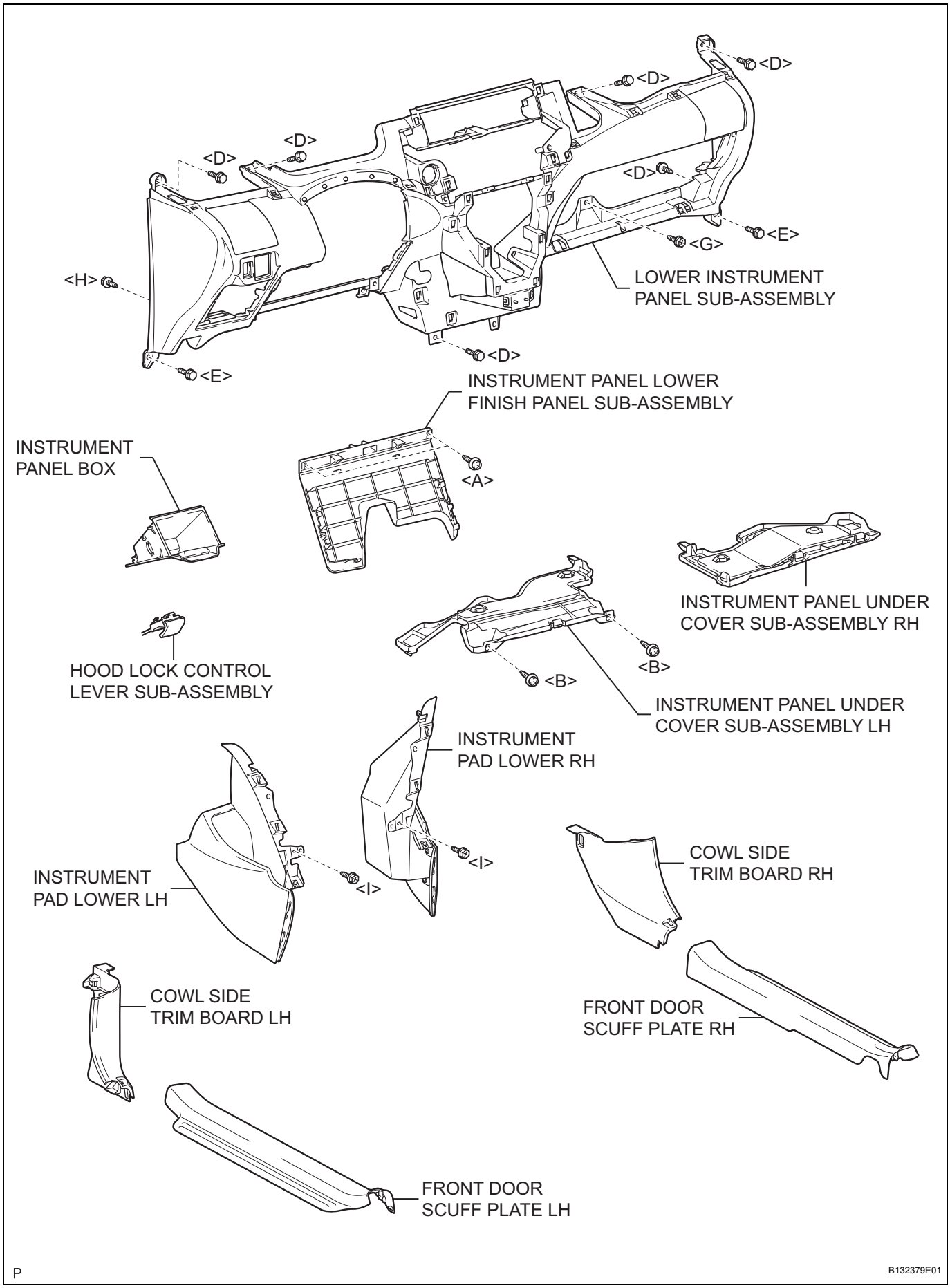
<D>
<D>
<D>
<D>
<D>
<D>
<E>
<G>
<H>
<E>
LOWER INSTRUMENT PANEL SUB-ASSEMBLY
INSTRUMENT PANEL LOWER FINISH PANEL SUB-ASSEMBLY
<A>
INSTRUMENT PANEL BOX
INSTRUMENT PANEL UNDER COVER SUB-ASSEMBLY RH
HOOD LOCK CONTROL LEVER SUB-ASSEMBLY
<B>
<B>
INSTRUMENT PANEL UNDER COVER SUB-ASSEMBLY LH
INSTRUMENT PAD LOWER RH
<I>
<I>
INSTRUMENT PAD LOWER LH
COWL SIDE TRIM BOARD RH
COWL SIDE TRIM BOARD LH
FRONT DOOR SCUFF PLATE RH
FRONT DOOR SCUFF PLATE LH
P
B132379E01

for Manual Transaxle:

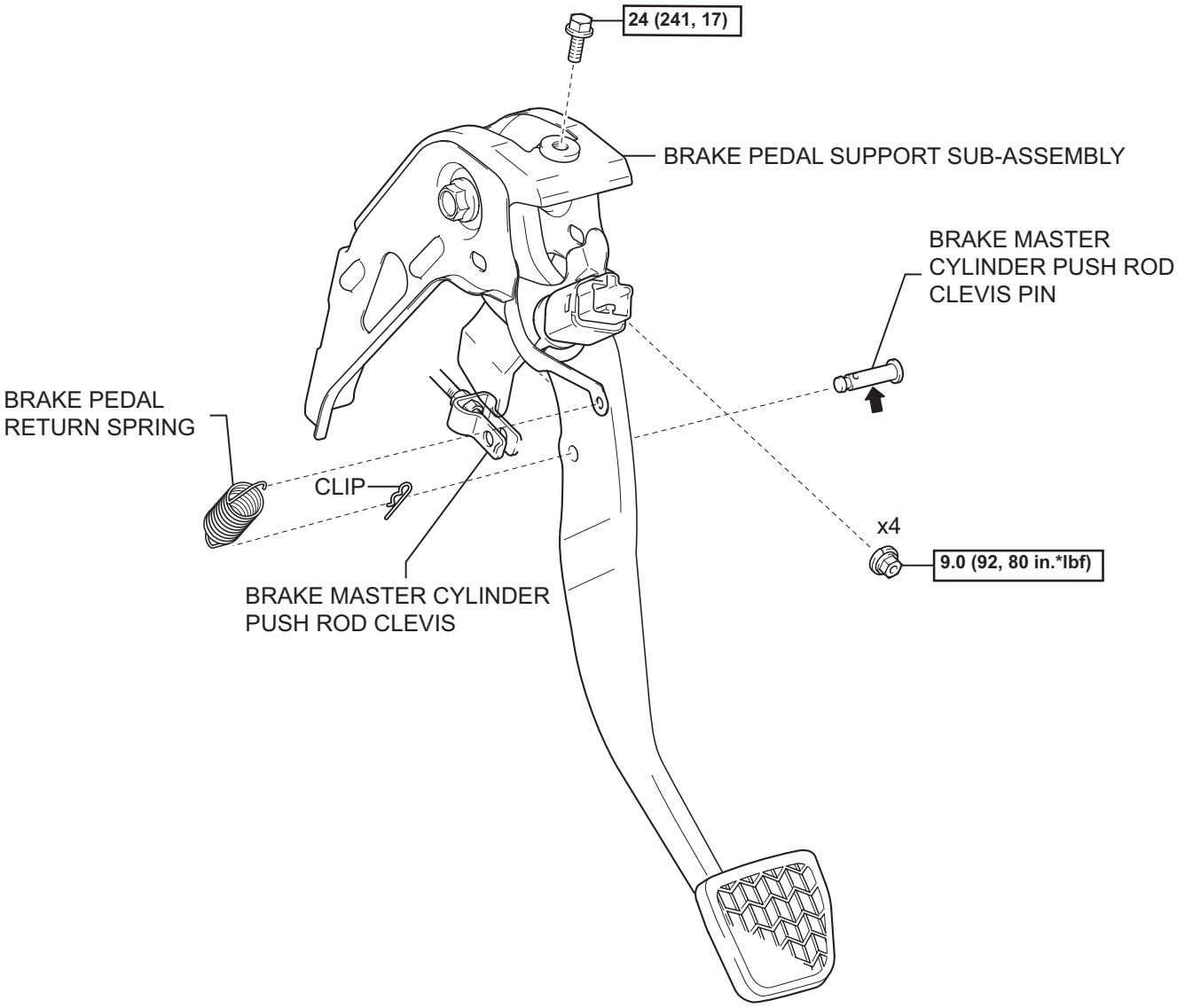

N*m (kgf*cm, ft.*lbf) : Specified torque

Lithium Soap base glycol grease

P

C118552E02

for Automatic Transaxle:

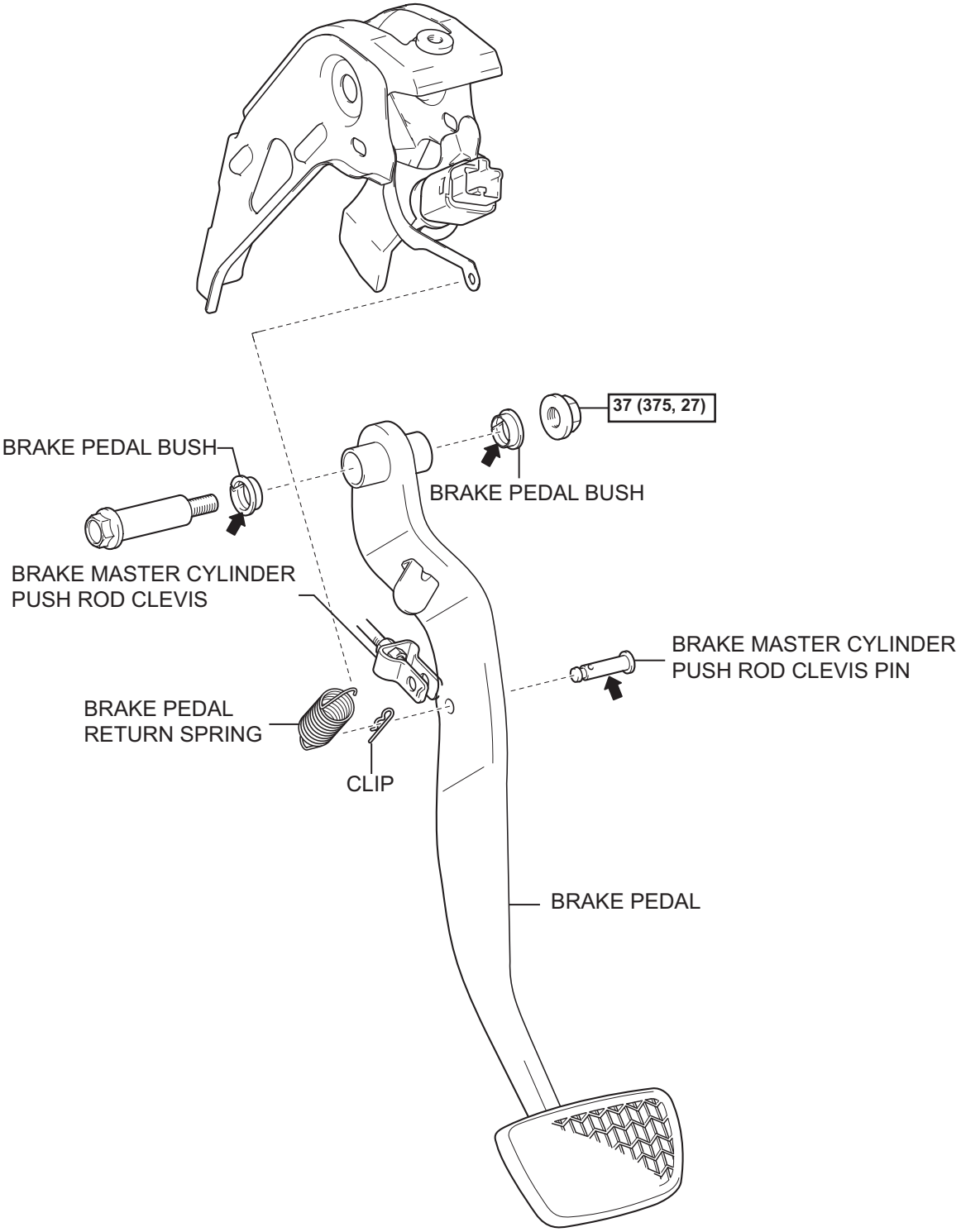

N*m (kgf*cm, ft.*lbf) : Specified torque ⬅ Lithium Soap base glycol grease

P

C118551E03

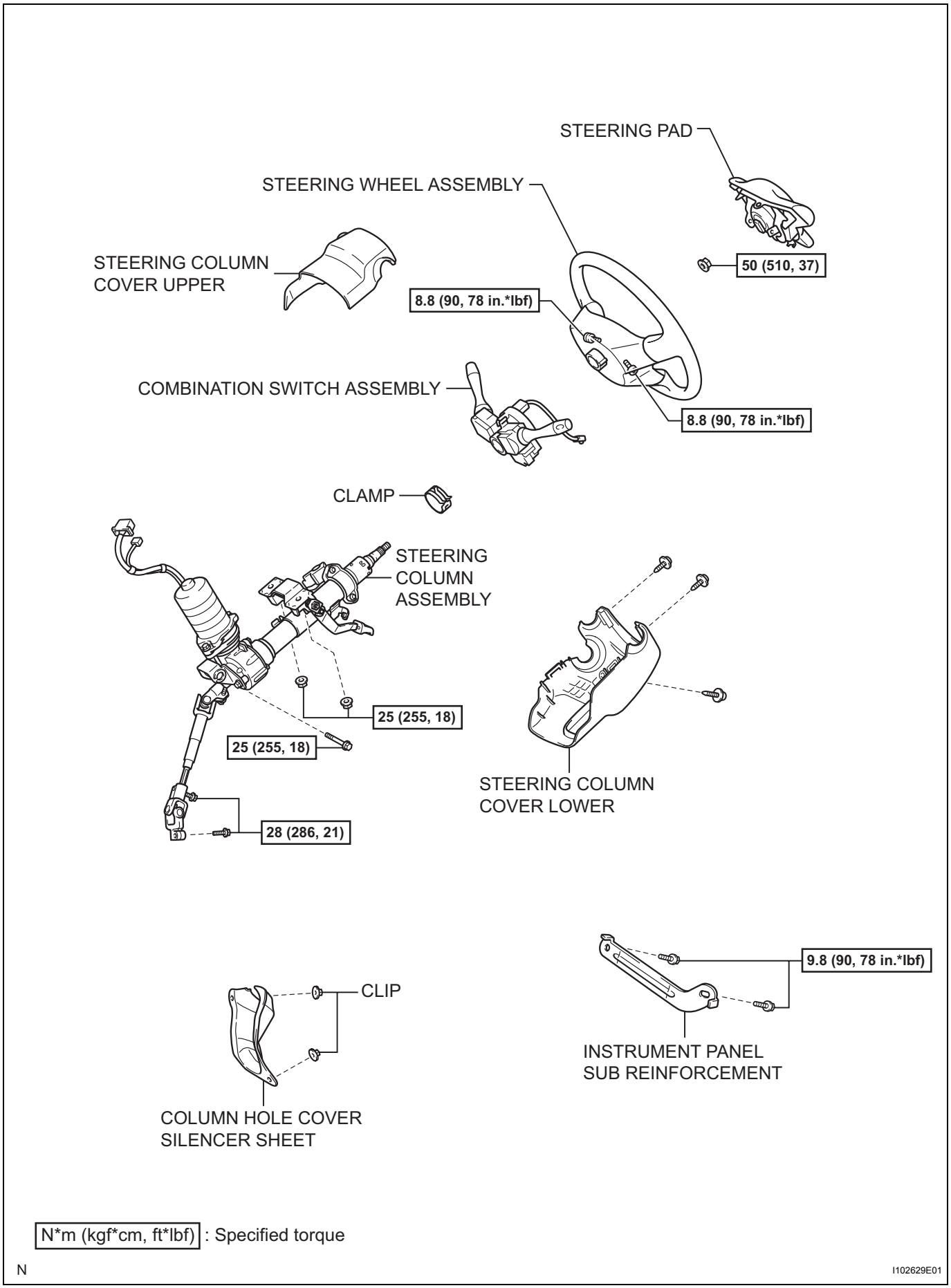
STEERING PAD
STEERING WHEEL ASSEMBLY
STEERING COLUMN COVER UPPER
50 (510, 37)
8.8 (90, 78 in.*lbf)
COMBINATION SWITCH ASSEMBLY
8.8 (90, 78 in.*lbf)
CLAMP
STEERING COLUMN ASSEMBLY
25 (255, 18)
25 (255, 18)
28 (286, 21)
STEERING COLUMN COVER LOWER
9.8 (90, 78 in.*lbf)
CLIP
INSTRUMENT PANEL SUB REINFORCEMENT
COLUMN HOLE COVER SILENCER SHEET
N*m (kgf*cm, ft*lbf) : Specified torque
N
I102629E01

AC

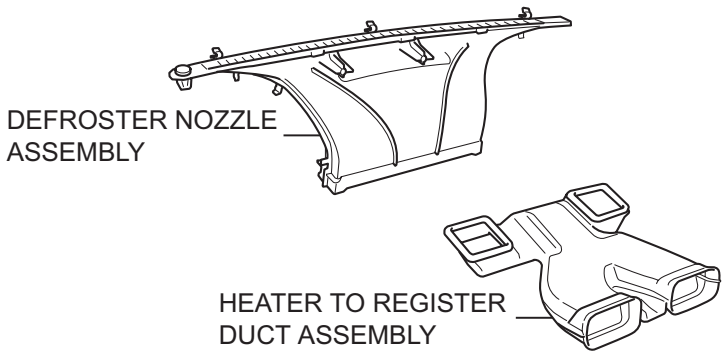

for Cold Area Specification Vehicles:

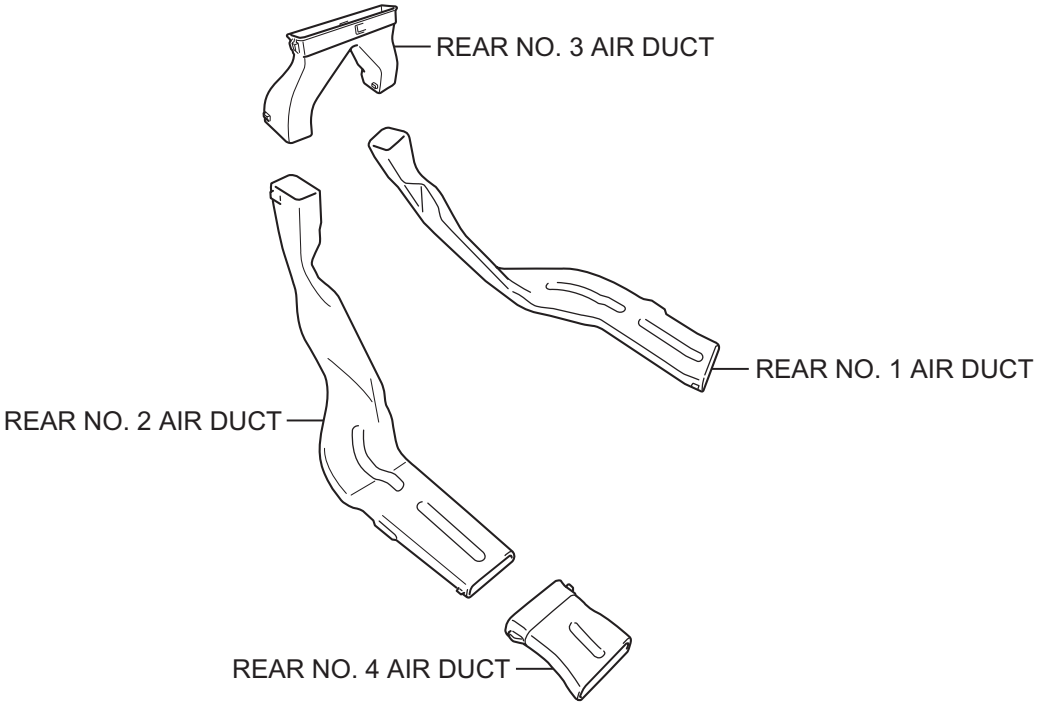

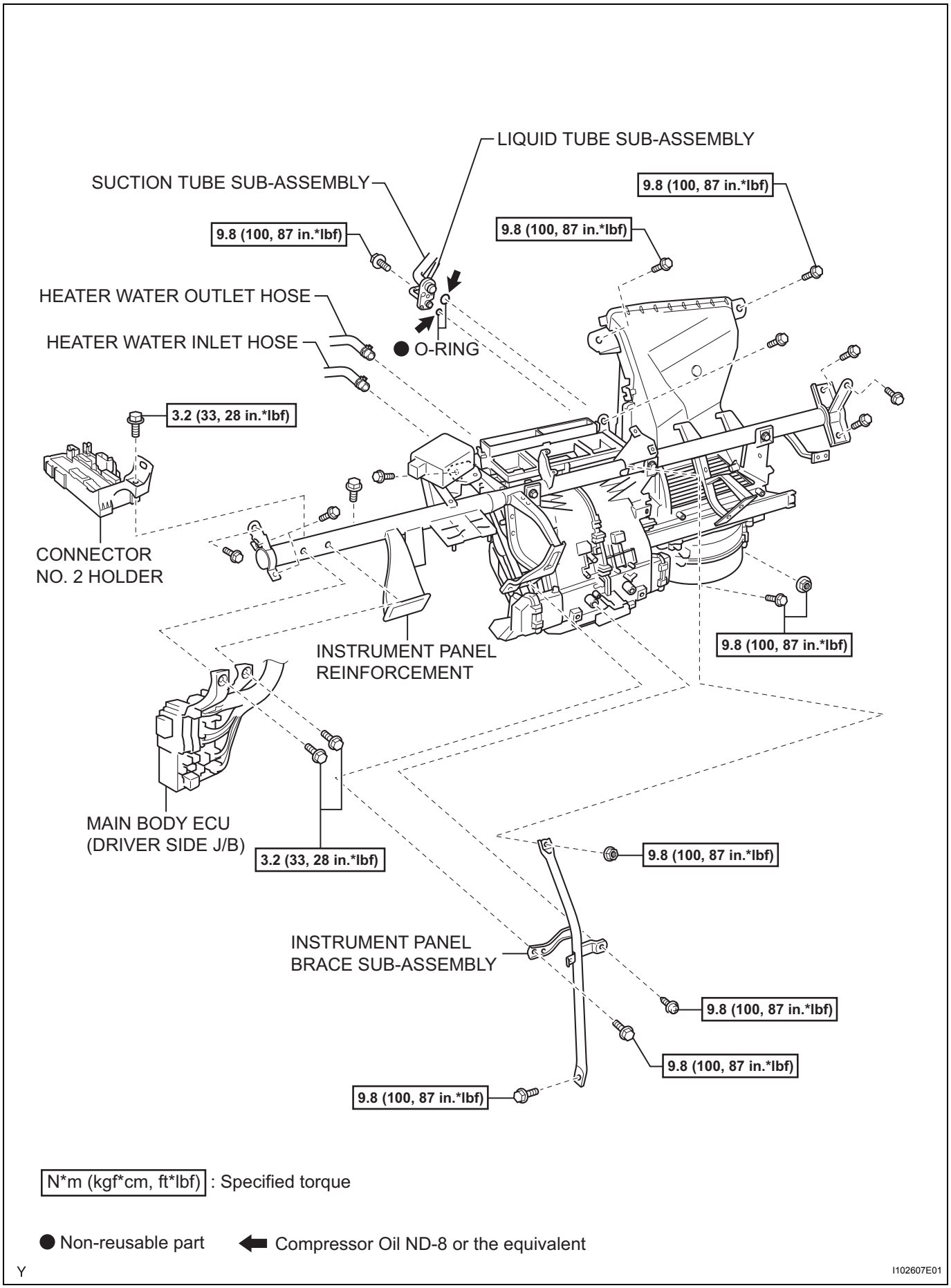
LIQUID TUBE SUB-ASSEMBLY
SUCTION TUBE SUB-ASSEMBLY
9.8 (100, 87 in.*lbf)
9.8 (100, 87 in.*lbf)
9.8 (100, 87 in.*lbf)
HEATER WATER OUTLET HOSE
HEATER WATER INLET HOSE
● O-RING
3.2 (33, 28 in.*lbf)
CONNECTOR
NO. 2 HOLDER
INSTRUMENT PANEL
REINFORCEMENT
9.8 (100, 87 in.*lbf)
MAIN BODY ECU
(DRIVER SIDE J/B)
3.2 (33, 28 in.*lbf)
9.8 (100, 87 in.*lbf)
INSTRUMENT PANEL
BRACE SUB-ASSEMBLY
9.8 (100, 87 in.*lbf)
9.8 (100, 87 in.*lbf)
9.8 (100, 87 in.*lbf)
N*m (kgf*cm, ft*lbf) : Specified torque
● Non-reusable part
Compressor Oil ND-8 or the equivalent
Y
I102607E01

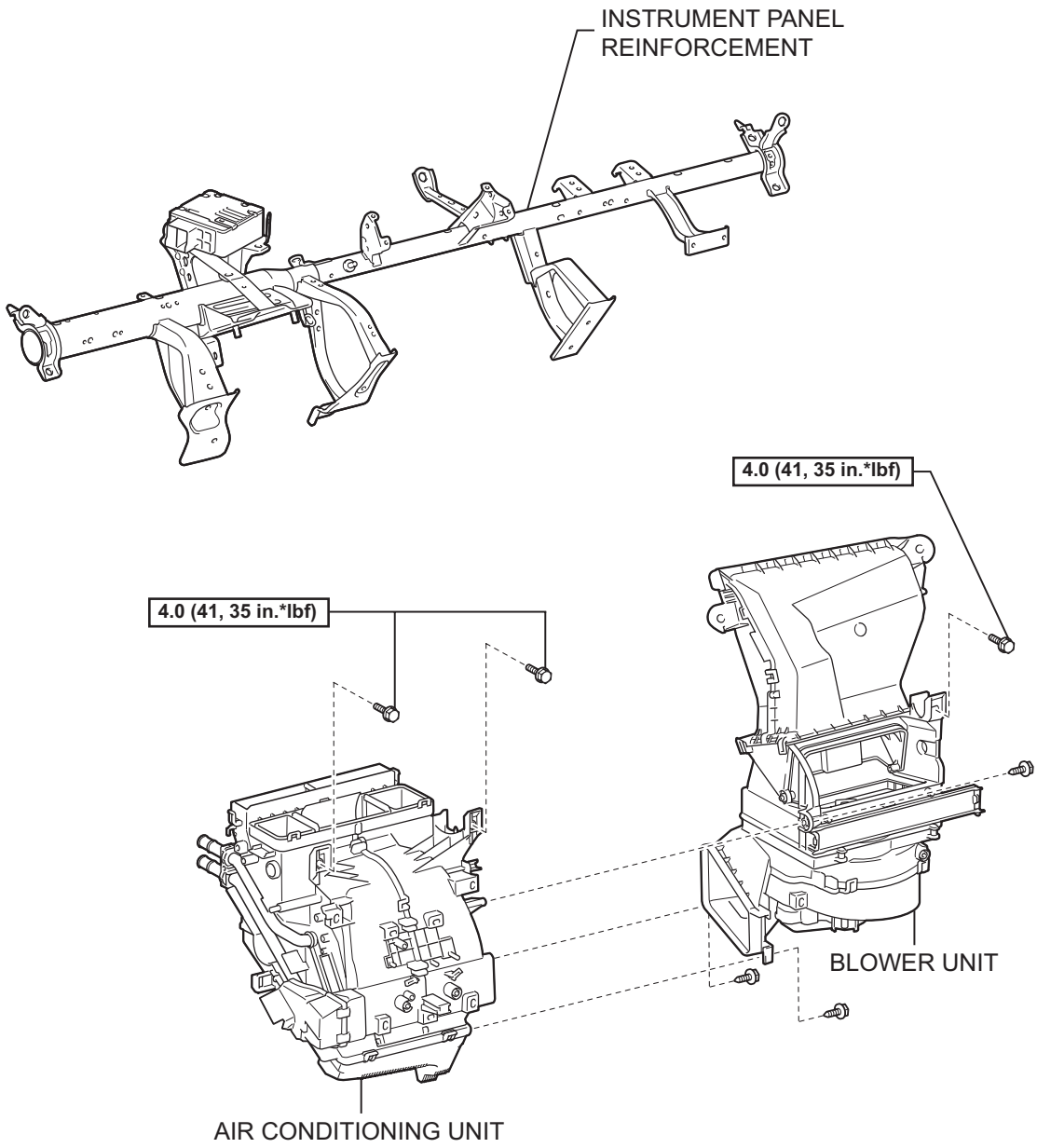

N*m (kgf*cm, ft*lbf) : Specified torque

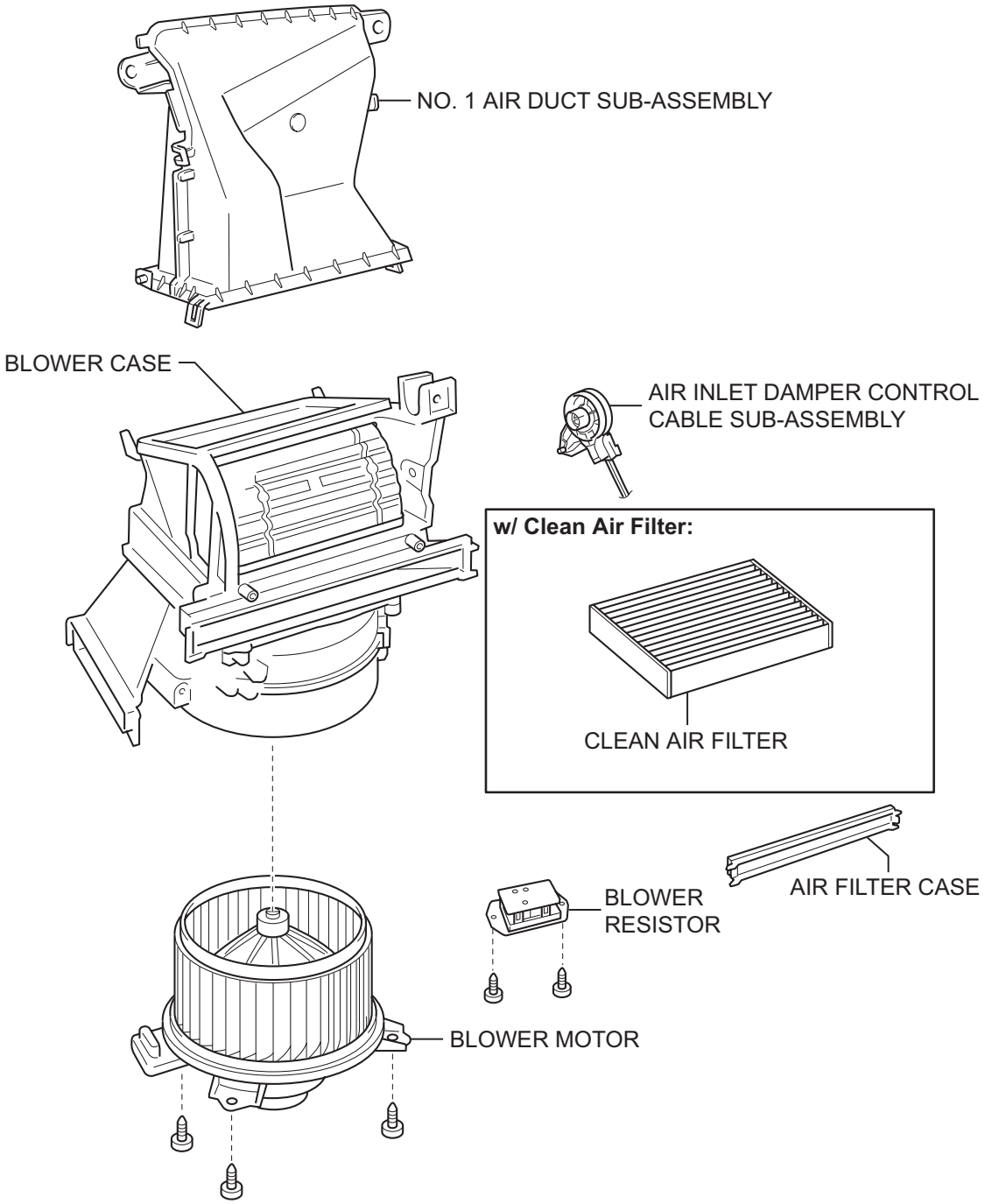
NO. 1 AIR DUCT SUB-ASSEMBLY
BLOWER CASE
AIR INLET DAMPER CONTROL CABLE SUB-ASSEMBLY
w/ Clean Air Filter:
CLEAN AIR FILTER
AIR FILTER CASE
BLOWER RESISTOR
BLOWER MOTOR

REMOVAL

CAUTION:
Some of these service operations affect the SRS airbag system. Read the precautionary notices concerning the SRS airbag system before servicing (See page RS-1).
HINT:
Use the same procedure for both the RH and LH sides.

1. **DISCONNECT CABLE FROM NEGATIVE BATTERY TERMINAL**
   Wait for at least 90 seconds after disconnecting the cable to prevent the airbag from working.
2. **DISCHARGE REFRIGERANT FROM REFRIGERATION SYSTEM (See page AC-66)**
3. **DRAIN ENGINE COOLANT (for 1NZ-FE) (See page CO-8)**
4. **DISCONNECT SUCTION TUBE SUB-ASSEMBLY (See page AC-84)**
5. **DISCONNECT LIQUID TUBE SUB-ASSEMBLY (See page AC-84)**
6. **DISCONNECT HEATER WATER OUTLET HOSE (See page AC-84)**
7. **DISCONNECT HEATER WATER INLET HOSE (See page AC-85)**
8. **BOLTS, SCREWS AND NUTS TABLE (See page IP-41)**
9. **REMOVE INSTRUMENT PANEL FINISH PANEL LOWER CENTER (See page ME-138)**
10. **REMOVE INSTRUMENT PANEL FINISH PANEL END LH (See page ME-138)**
11. **REMOVE INSTRUMENT PANEL FINISH PANEL END RH (See page ME-138)**
12. **REMOVE INSTRUMENT CLUSTER FINISH PANEL (See page ME-139)**
13. **REMOVE COMBINATION METER ASSEMBLY (See page ME-139)**
14. **REMOVE INSTRUMENT CLUSTER FINISH PANEL CENTER SUB-ASSEMBLY (See page IP-43)**
15. **REMOVE STEREO OPENING COVER (w/o Radio Receiver) (See page IP-43)**
16. **REMOVE RADIO RECEIVER ASSEMBLY (See page AV-38)**
17. **REMOVE AIR CONDITIONING PANEL ASSEMBLY (See page AC-239)**
18. **DISCONNECT AIR MIX DAMPER CONTROL CABLE SUB-ASSEMBLY (See page AC-240)**

19. DISCONNECT DEFROSTER DAMPER CONTROL CABLE SUB-ASSEMBLY (See page AC-240)
20. DISCONNECT AIR INLET DAMPER CONTROL CABLE SUB-ASSEMBLY (See page AC-240)
21. SEPARATE FRONT DOOR OPENING TRIM WEATHERSTRIP RH (See page IP-5)
22. SEPARATE FRONT DOOR OPENING TRIM WEATHERSTRIP LH (See page IP-5)
23. REMOVE FRONT PILLAR GARNISH RH (See page IR-18)
24. REMOVE FRONT PILLAR GARNISH LH (See page IR-19)
25. REMOVE GLOVE COMPARTMENT DOOR ASSEMBLY (See page IP-6)
26. REMOVE UPPER INSTRUMENT PANEL SUB-ASSEMBLY (See page IP-6)
27. REMOVE FRONT DOOR SCUFF PLATE RH (See page IR-14)
28. REMOVE FRONT DOOR SCUFF PLATE LH (See page IR-14)
29. REMOVE INSTRUMENT PANEL UNDER COVER SUB-ASSEMBLY RH (See page IR-14)
30. REMOVE INSTRUMENT PANEL UNDER COVER SUB-ASSEMBLY LH (See page IR-14)
31. REMOVE COWL SIDE TRIM BOARD RH (See page IR-15)
32. REMOVE COWL SIDE TRIM BOARD LH (See page IR-15)
33. REMOVE SHIFT LEVER KNOB SUB-ASSEMBLY (for Manual Transaxle) (See page IP-84)
34. REMOVE UPPER CONSOLE PANEL SUB-ASSEMBLY (See page IP-84)
35. REMOVE CONSOLE UPPER REAR PANEL SUB-ASSEMBLY (See page IP-84)
36. REMOVE CONSOLE BOX CARPET (See page IP-85)
37. REMOVE REAR CONSOLE BOX ASSEMBLY (See page IP-85)
38. REMOVE INSTRUMENT PAD LOWER LH (See page IP-44)
39. REMOVE INSTRUMENT PAD LOWER RH (See page IP-45)
40. REMOVE INSTRUMENT PANEL LOWER FINISH PANEL SUB-ASSEMBLY (See page IP-45)
41. REMOVE INSTRUMENT PANEL BOX (See page IP-45)

42. **DISCONNECT ANTENNA CORD SUB-ASSEMBLY (See page IP-46)**
43. **SEPARATE HOOD LOCK CONTROL LEVER SUB-ASSEMBLY (See page IP-46)**
44. **REMOVE LOWER INSTRUMENT PANEL SUB-ASSEMBLY (See page IP-46)**
45. **POSITION FRONT WHEELS FACING STRAIGHT AHEAD**
46. **REMOVE STEERING PAD (See page RS-309)**
47. **REMOVE STEERING WHEEL ASSEMBLY (See page SR-12)**
48. **REMOVE STEERING COLUMN COVER (See page SR-12)**
49. **REMOVE COMBINATION SWITCH ASSEMBLY (See page SR-13)**
50. **DISCONNECT POWER STEERING ECU (See page SR-13)**
51. **REMOVE INSTRUMENT PANEL SUB REINFORCEMENT (See page SR-14)**
52. **REMOVE COLUMN HOLE COVER SILENCER SHEET (See page SR-14)**
53. **SEPARATE STEERING SLIDING YOKE SUB-ASSEMBLY (See page AC-87)**
54. **REMOVE BRAKE PEDAL (for Automatic Transaxle) (See page SR-14)**
55. **REMOVE BRAKE MASTER CYLINDER PUSH ROD CLEVIS (for Manual Transaxle) (See page BR-20)**
56. **REMOVE BRAKE PEDAL SUPPORT SUB-ASSEMBLY (for Manual Transaxle) (See page BR-21)**
57. **REMOVE STEERING COLUMN ASSEMBLY (See page SR-15)**
58. **REMOVE HEATER TO REGISTER DUCT ASSEMBLY (See page AC-87)**
59. **REMOVE DEFROSTER NOZZLE ASSEMBLY (See page AC-87)**
60. **REMOVE REAR NO. 2 AIR DUCT (for Cold Area Specification Vehicles) (See page AC-88)**
61. **REMOVE REAR NO. 1 AIR DUCT (for Cold Area Specification Vehicles) (See page AC-88)**
62. **REMOVE REAR NO. 3 AIR DUCT (for Cold Area Specification Vehicles) (See page AC-88)**
63. **REMOVE INSTRUMENT PANEL BRACE SUB-ASSEMBLY (See page AC-89)**

64. SEPARATE MAIN BODY ECU (DRIVER SIDE J/B) (See page AC-89)

65. SEPARATE CONNECTOR NO. 2 HOLDER (See page AC-89)

66. REMOVE INSTRUMENT PANEL REINFORCEMENT (See page AC-90)

67. REMOVE BLOWER UNIT

(a) Remove the 3 screws and the blower unit.

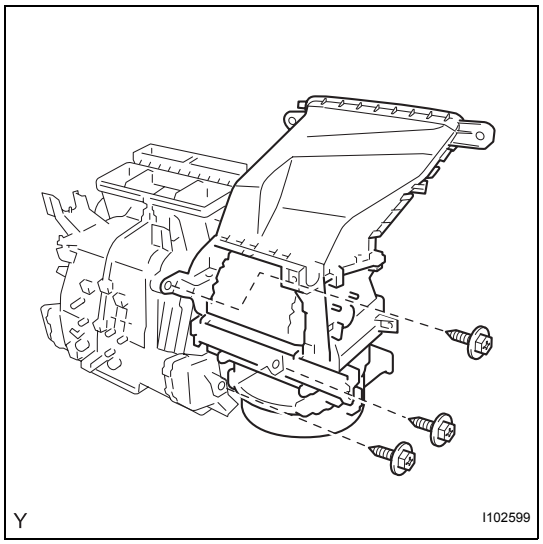

DISASSEMBLY

1. REMOVE NO. 1 AIR DUCT SUB-ASSEMBLY

(a) Disengage the 2 claws and remove the air duct.

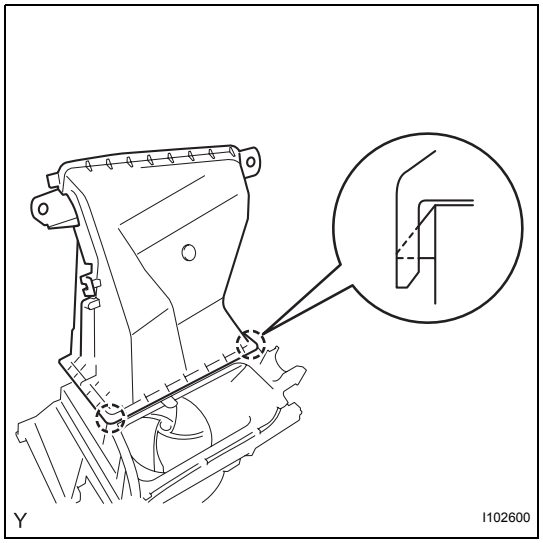

2. REMOVE AIR INLET DAMPER CONTROL CABLE SUB-ASSEMBLY

(a) Disengage the 3 claws and remove the air inlet damper control cable.

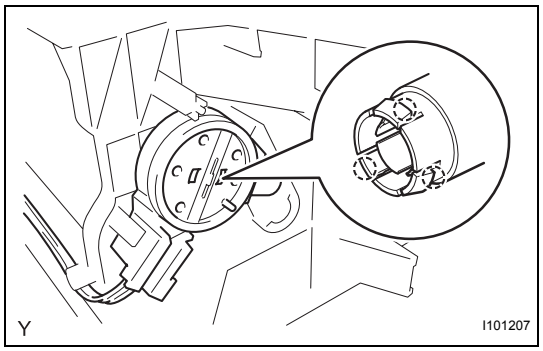

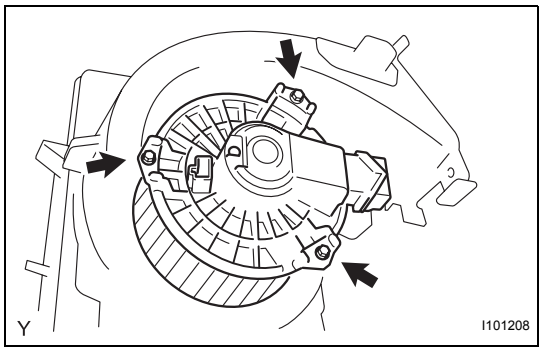

3. REMOVE BLOWER MOTOR

(a) Remove the 3 screws and the blower motor.

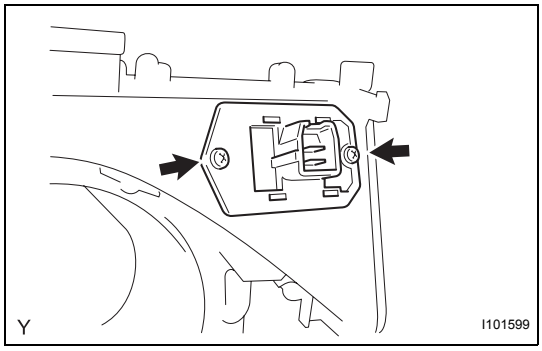

4. REMOVE BLOWER RESISTOR

(a) Remove the 2 screws and the blower resistor.

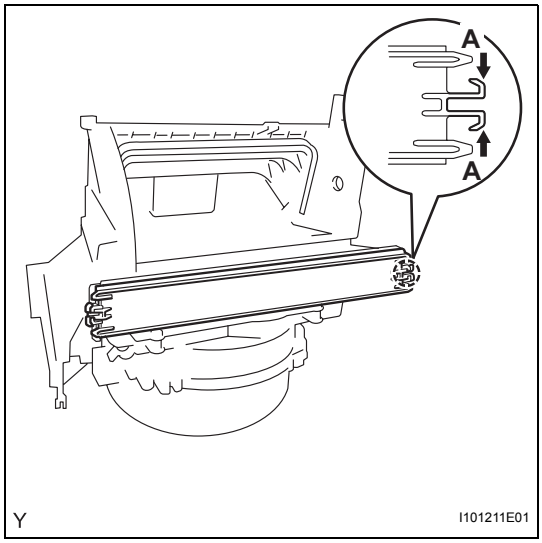

5. REMOVE AIR FILTER CASE

(a) Pinch portion A to disengage the claw and remove the air filter case.

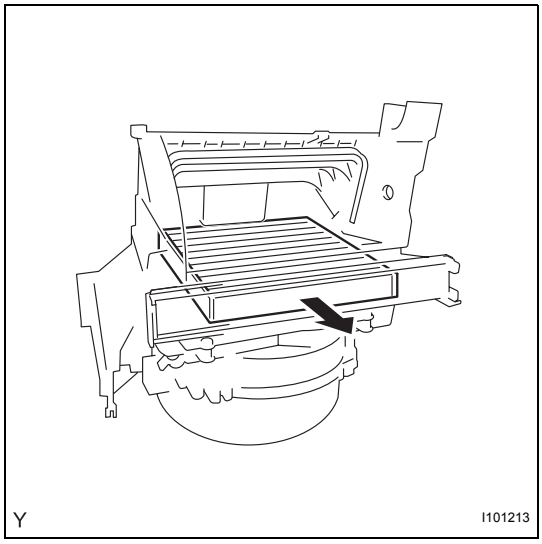

6. REMOVE CLEAN AIR FILTER

(a) Remove the clean air filter from the blower assembly.

REASSEMBLY

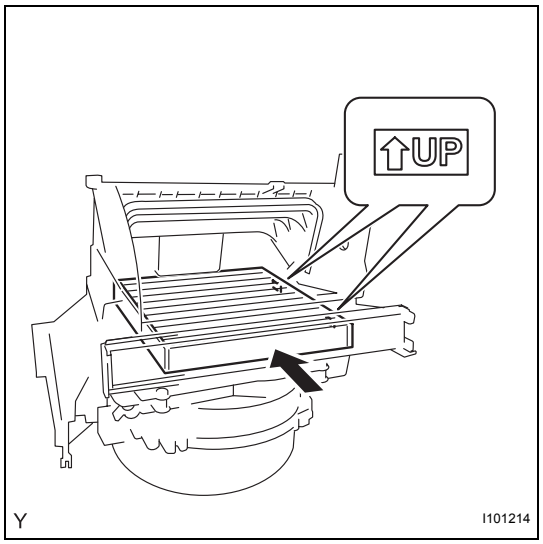

1. INSTALL CLEAN AIR FILTER

(a) Install the clean air filter into the blower assembly.
NOTICE:
Install the clean air filter with its UP mark oriented in the correct direction.

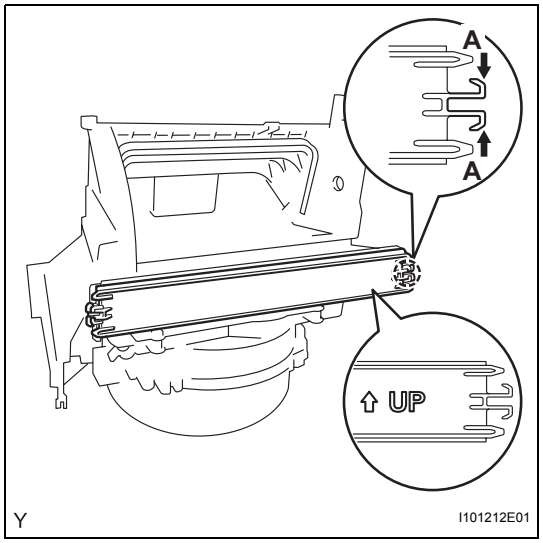

2. INSTALL AIR FILTER CASE

(a) Insert the rib of the air filter case into the blower assembly.
NOTICE:
Install the air filter case with its UP mark oriented in the correct direction.

(b) Pinch portion A to engage the claw and install the air filter case.

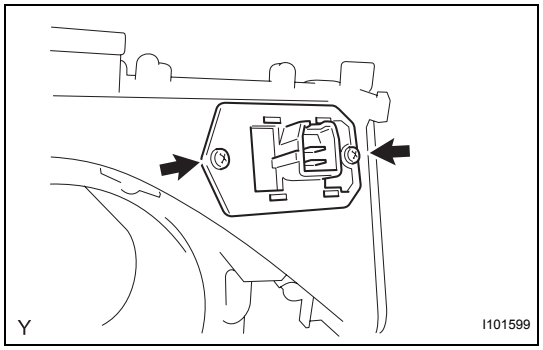

3. INSTALL BLOWER RESISTOR

(a) Install the blower resistor with the 2 screws.

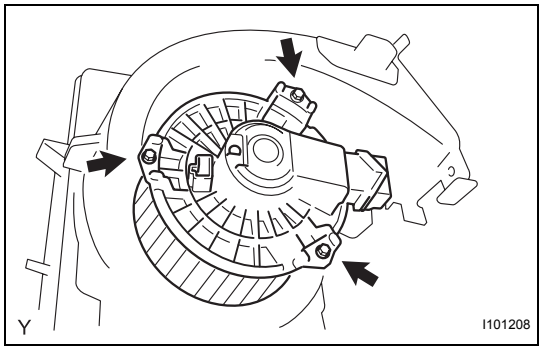

4. INSTALL BLOWER MOTOR

(a) Install the blower motor with the 3 screws.

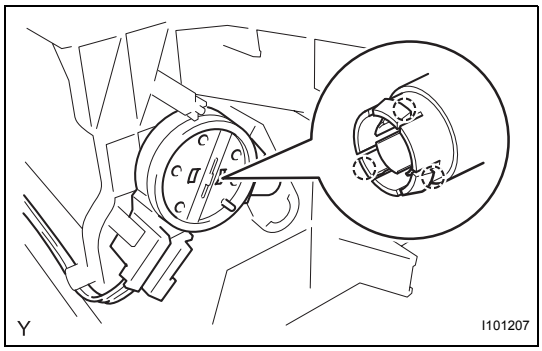

5. **INSTALL AIR INLET DAMPER CONTROL CABLE SUB-ASSEMBLY**
   (a) Engage the 3 claws and install the air inlet damper control cable.

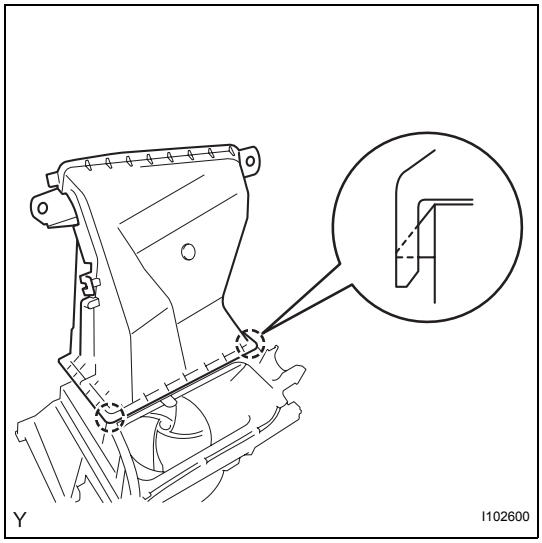

6. **INSTALL NO. 1 AIR DUCT SUB-ASSEMBLY**
   (a) Engage the 2 claws and install the air duct.

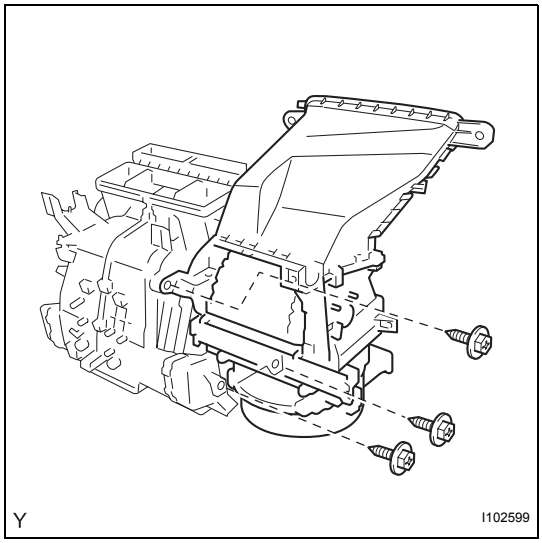

INSTALLATION

1. **INSTALL BLOWER UNIT**
   (a) Install the blower unit with the 3 screws.
2. **INSTALL INSTRUMENT PANEL REINFORCEMENT (See page AC-100)**
3. **INSTALL CONNECTOR NO. 2 HOLDER (See page AC-103)**
4. **INSTALL MAIN BODY ECU (DRIVER SIDE J/B) (See page AC-103)**
5. **INSTALL INSTRUMENT PANEL BRACE SUB-ASSEMBLY (See page AC-104)**
6. **INSTALL REAR NO. 3 AIR DUCT (for Cold Area Specification Vehicles) (See page AC-104)**
7. **INSTALL REAR NO. 1 AIR DUCT (for Cold Area Specification Vehicles) (See page AC-105)**
8. **INSTALL REAR NO. 2 AIR DUCT (for Cold Area Specification Vehicles) (See page AC-105)**
9. **INSTALL DEFROSTER NOZZLE ASSEMBLY (See page AC-105)**
10. **INSTALL HEATER TO REGISTER DUCT ASSEMBLY (See page AC-106)**

11. **INSTALL STEERING COLUMN ASSEMBLY (See page SR-19)**
12. **INSTALL BRAKE PEDAL SUPPORT SUB-ASSEMBLY (for Manual Transaxle) (See page BR-21)**
13. **INSTALL BRAKE MASTER CYLINDER PUSH ROD CLEVIS (for Manual Transaxle) (See page BR-21)**
14. **INSTALL BRAKE PEDAL (for Automatic Transaxle) (See page SR-19)**
15. **INSTALL STEERING SLIDING YOKE SUB-ASSEMBLY (See page AC-106)**
16. **INSTALL COLUMN HOLE COVER SILENCER SHEET (See page SR-20)**
17. **INSTALL INSTRUMENT PANEL SUB REINFORCEMENT (See page SR-20)**
18. **CONNECT POWER STEERING ECU (See page SR-21)**
19. **INSTALL COMBINATION SWITCH ASSEMBLY (See page SR-21)**
20. **INSTALL STEERING COLUMN COVER (See page SR-22)**
21. **INSTALL STEERING WHEEL ASSEMBLY (See page SR-22)**
22. **INSTALL STEERING PAD (See page RS-310)**
23. **INSTALL LOWER INSTRUMENT PANEL SUB-ASSEMBLY (See page IP-52)**
24. **CONNECT HOOD LOCK CONTROL LEVER SUB-ASSEMBLY (See page IP-53)**
25. **CONNECT ANTENNA CORD SUB-ASSEMBLY (See page IP-53)**
26. **INSTALL INSTRUMENT PANEL BOX (See page IP-53)**
27. **INSTALL INSTRUMENT PANEL LOWER FINISH PANEL SUB-ASSEMBLY (See page IP-54)**
28. **INSTALL INSTRUMENT PAD LOWER RH (See page IP-54)**
29. **INSTALL INSTRUMENT PAD LOWER LH (See page IP-55)**
30. **INSTALL REAR CONSOLE BOX ASSEMBLY (See page IP-88)**
31. **INSTALL CONSOLE BOX CARPET (See page IP-88)**
32. **INSTALL CONSOLE UPPER REAR PANEL SUB-ASSEMBLY (See page IP-89)**
33. **INSTALL UPPER CONSOLE PANEL SUB-ASSEMBLY (See page IP-89)**

34. **INSTALL SHIFT LEVER KNOB SUB-ASSEMBLY (for Manual Transaxle) (See page IP-89)**
35. **INSTALL COWL SIDE TRIM BOARD RH (See page IR-34)**
36. **INSTALL COWL SIDE TRIM BOARD LH (See page IR-34)**
37. **INSTALL INSTRUMENT PANEL UNDER COVER SUB-ASSEMBLY RH (See page IR-35)**
38. **INSTALL INSTRUMENT PANEL UNDER COVER SUB-ASSEMBLY LH (See page IR-35)**
39. **INSTALL FRONT DOOR SCUFF PLATE RH (See page IR-35)**
40. **INSTALL FRONT DOOR SCUFF PLATE LH (See page IR-35)**
41. **INSTALL UPPER INSTRUMENT PANEL SUB-ASSEMBLY (See page IP-11)**
42. **INSTALL GLOVE COMPARTMENT DOOR ASSEMBLY (See page IP-13)**
43. **INSTALL FRONT PILLAR GARNISH RH (See page IR-29)**
44. **INSTALL FRONT PILLAR GARNISH LH (See page IR-30)**
45. **INSTALL FRONT DOOR OPENING TRIM WEATHERSTRIP RH (See page IP-14)**
46. **INSTALL FRONT DOOR OPENING TRIM WEATHERSTRIP LH (See page IP-14)**
47. **CONNECT AIR INLET DAMPER CONTROL CABLE SUB-ASSEMBLY (See page AC-246)**
48. **CONNECT DEFROSTER DAMPER CONTROL CABLE SUB-ASSEMBLY (See page AC-246)**
49. **CONNECT AIR MIX DAMPER CONTROL CABLE SUB-ASSEMBLY (See page AC-246)**
50. **INSTALL AIR CONDITIONING PANEL ASSEMBLY (See page AC-246)**
51. **INSTALL STEREO OPENING COVER (w/o Radio Receiver) (See page IP-56)**
52. **INSTALL RADIO RECEIVER ASSEMBLY (See page AV-40)**
53. **INSTALL INSTRUMENT CLUSTER FINISH PANEL CENTER SUB-ASSEMBLY (See page IP-56)**
54. **INSTALL COMBINATION METER ASSEMBLY (See page ME-140)**
55. **INSTALL INSTRUMENT CLUSTER FINISH PANEL (See page ME-140)**

56. **INSTALL INSTRUMENT PANEL FINISH PANEL END RH (See page ME-141)**
57. **INSTALL INSTRUMENT PANEL FINISH PANEL END LH (See page ME-141)**
58. **INSTALL INSTRUMENT PANEL FINISH PANEL LOWER CENTER (See page ME-142)**
59. **CONNECT HEATER WATER INLET HOSE (See page AC-108)**
60. **CONNECT HEATER WATER OUTLET HOSE (See page AC-108)**
61. **INSTALL LIQUID TUBE SUB-ASSEMBLY (See page AC-108)**
62. **INSTALL SUCTION TUBE SUB-ASSEMBLY (See page AC-109)**
63. **ADD ENGINE COOLANT (for 1NZ-FE) (See page CO-8)**
64. **CONNECT CABLE TO NEGATIVE BATTERY TERMINAL**
    Torque: 5.4 N*m (55 kgf*cm, 48 in.*lbf)
65. **CHECK SRS WARNING LIGHT**
    (See page AC-109)
66. **CHARGE REFRIGERANT (See page AC-67)**
67. **WARM UP ENGINE (See page AC-69)**
68. **CHECK FOR ENGINE COOLANT LEAK (for 1NZ-FE) (See page CO-1)**
69. **CHECK FOR REFRIGERANT LEAK (See page AC-69)**
70. **POSITION FRONT WHEELS FACING STRAIGHT AHEAD**
71. **PERFORM CALIBRATION OF TORQUE SENSOR ZERO POINT (See page SR-22)**

BLOWER UNIT (for Hatchback)

COMPONENTS

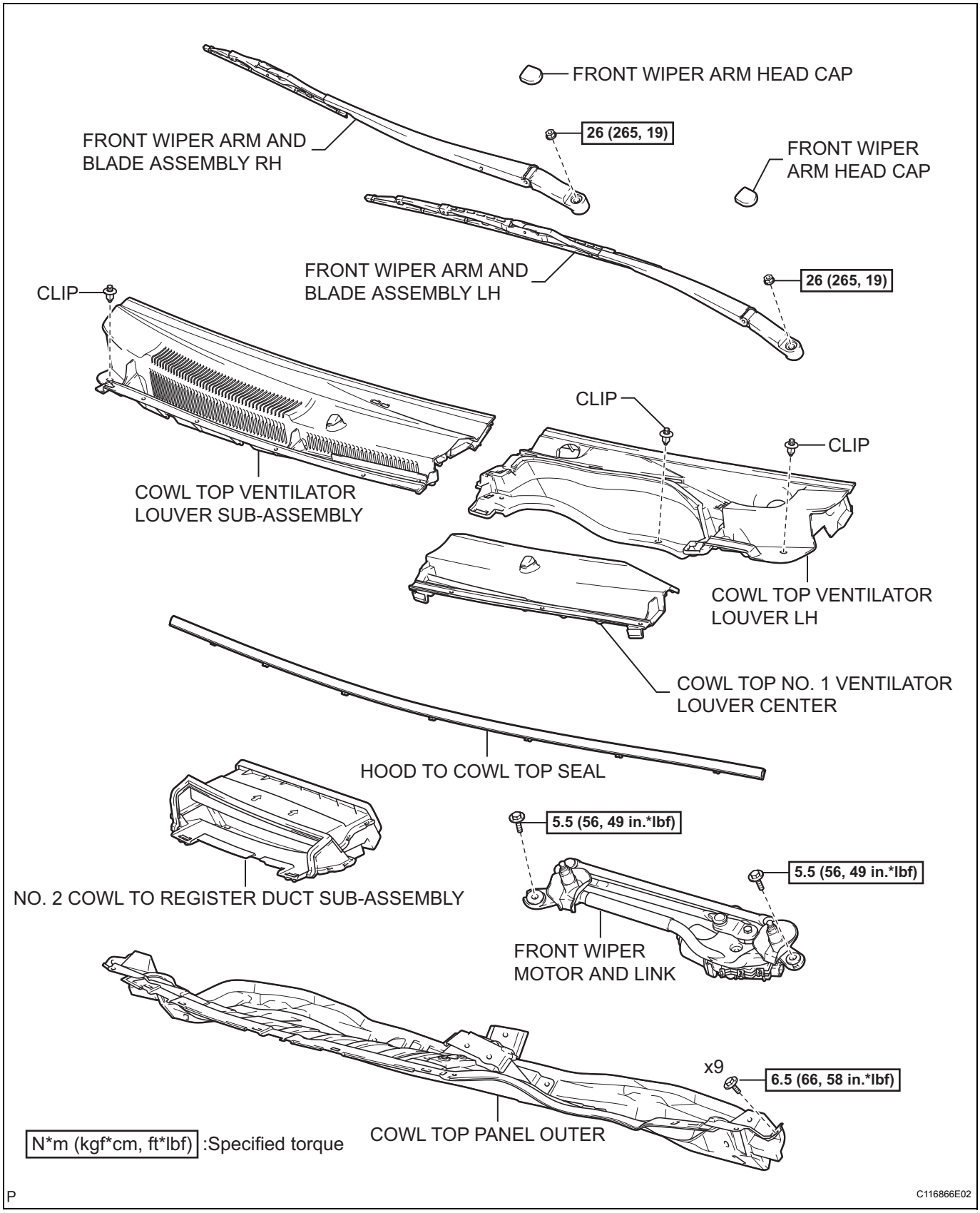

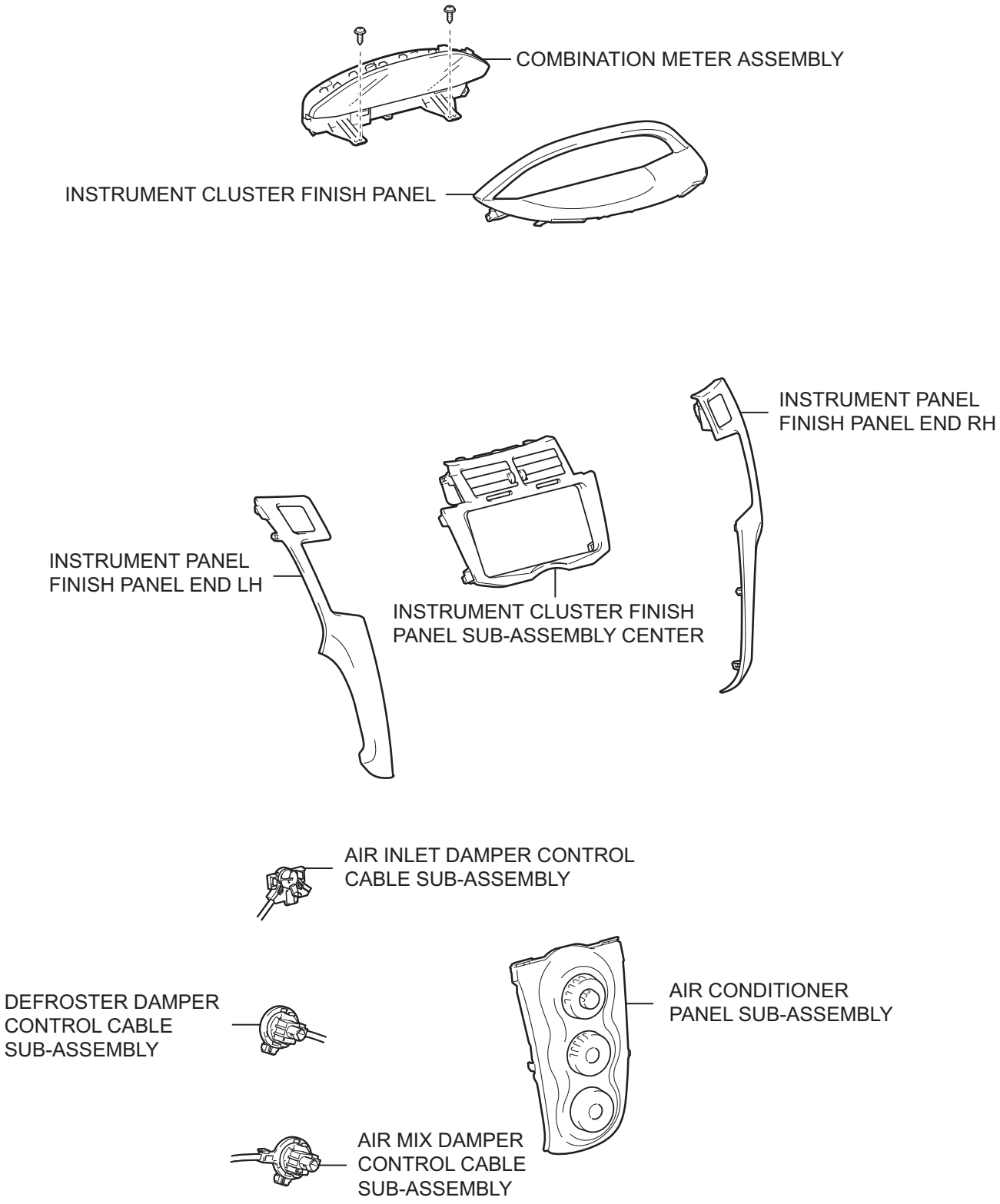

P

I101249E01

w/o Radio Receiver:

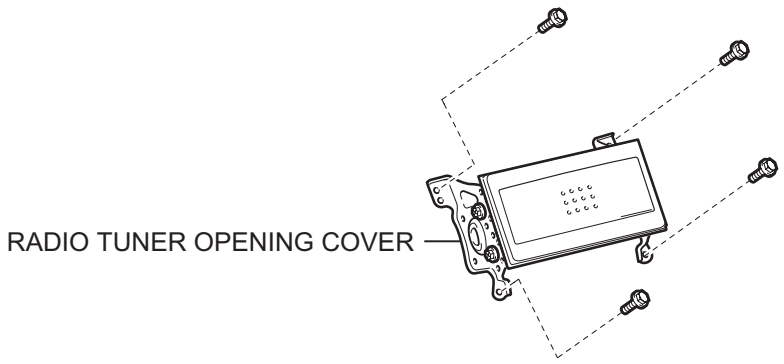

w/o CD Player:

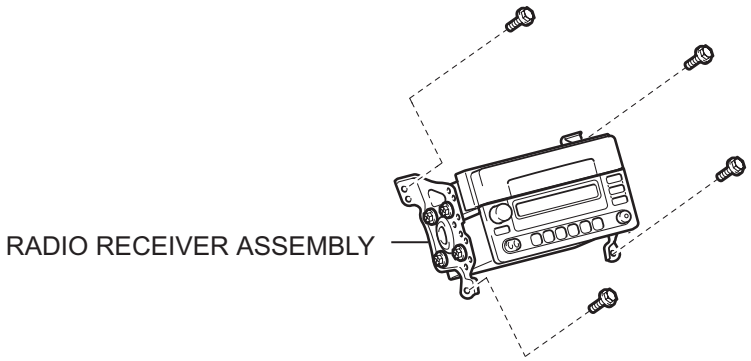

w/ CD Player:

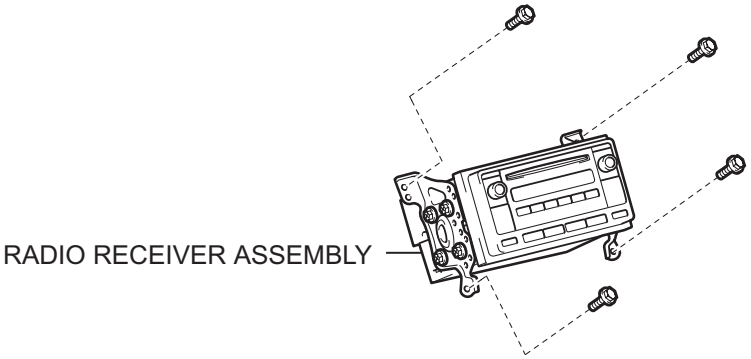

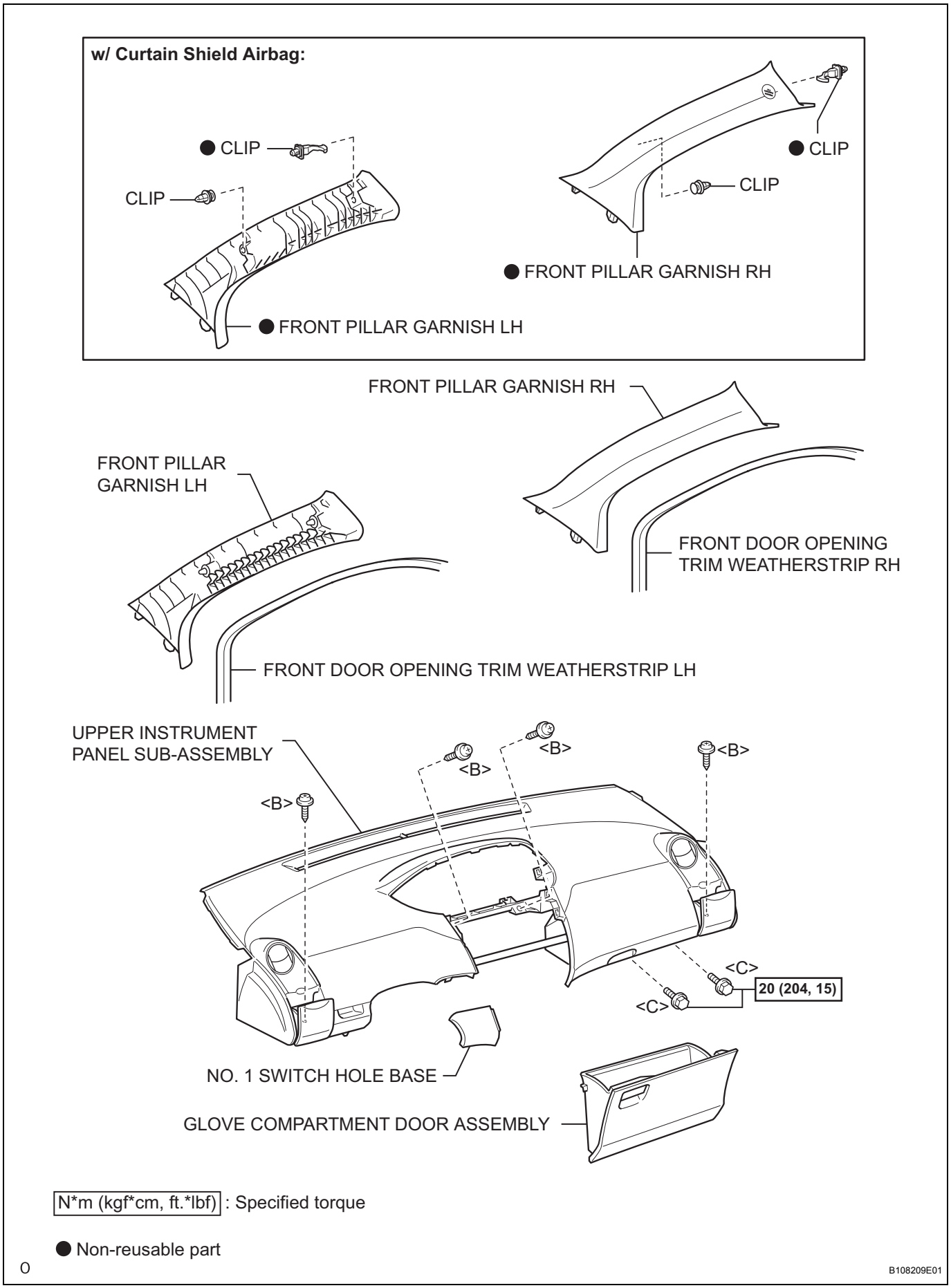
w/ Curtain Shield Airbag:
● CLIP
CLIP
● CLIP
CLIP
● FRONT PILLAR GARNISH RH
● FRONT PILLAR GARNISH LH
FRONT PILLAR GARNISH RH
FRONT PILLAR GARNISH LH
FRONT DOOR OPENING TRIM WEATHERSTRIP RH
FRONT DOOR OPENING TRIM WEATHERSTRIP LH
UPPER INSTRUMENT PANEL SUB-ASSEMBLY
<B>
<B>
<B>
<B>
<C>
<C>
20 (204, 15)
NO. 1 SWITCH HOLE BASE
GLOVE COMPARTMENT DOOR ASSEMBLY
N*m (kgf*cm, ft.*lbf) : Specified torque
● Non-reusable part
O
B108209E01

AC

for Manual Transaxle:

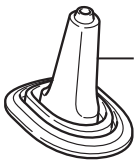

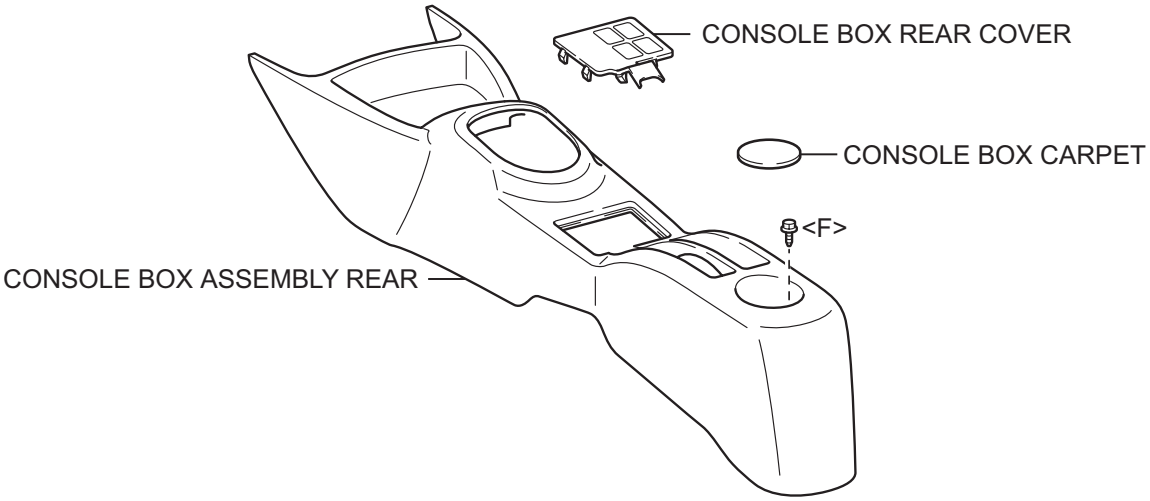

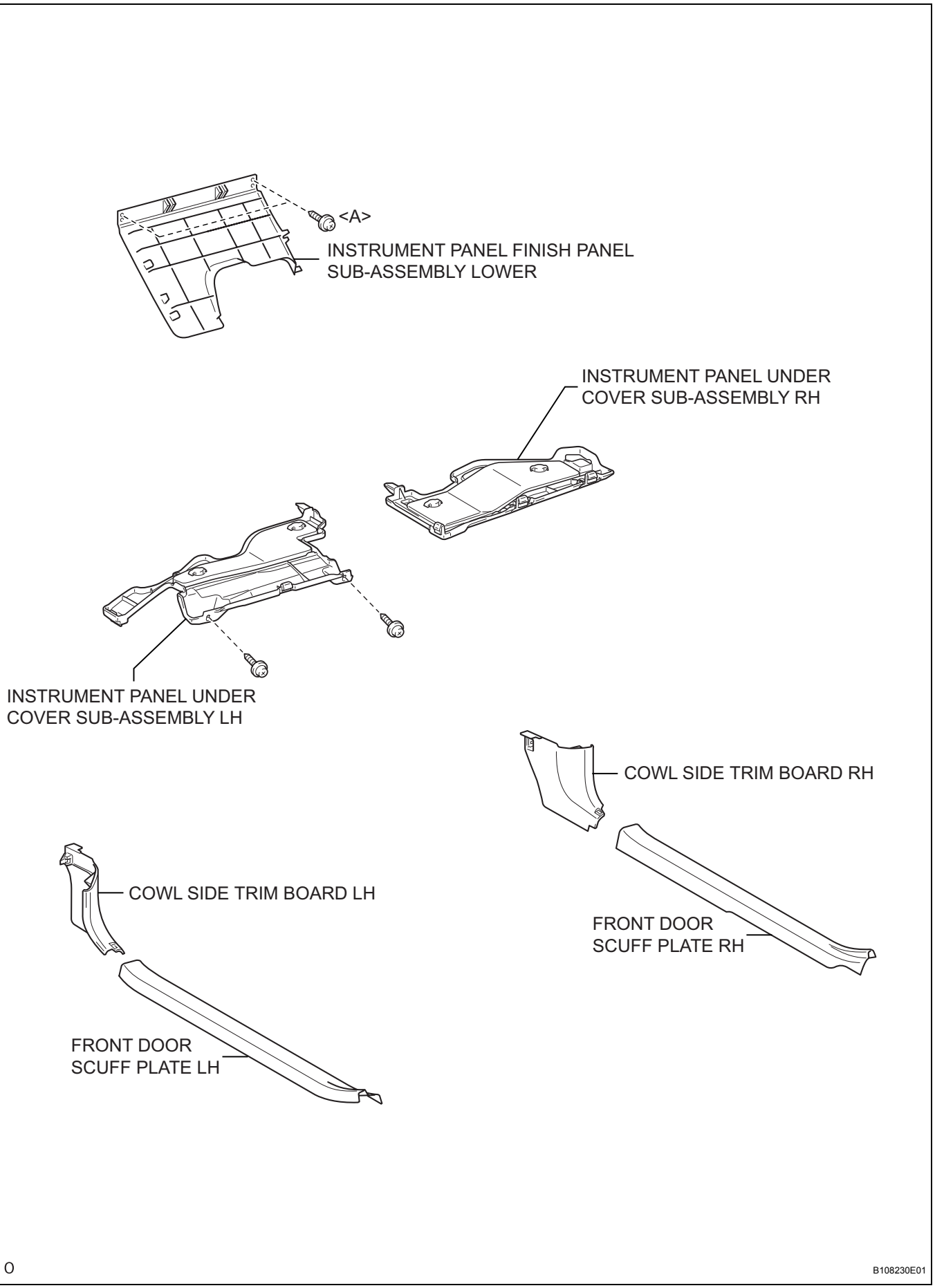
<A>
INSTRUMENT PANEL FINISH PANEL SUB-ASSEMBLY LOWER
INSTRUMENT PANEL UNDER COVER SUB-ASSEMBLY RH
INSTRUMENT PANEL UNDER COVER SUB-ASSEMBLY LH
COWL SIDE TRIM BOARD RH
FRONT DOOR SCUFF PLATE RH
COWL SIDE TRIM BOARD LH
FRONT DOOR SCUFF PLATE LH
O
B108230E01

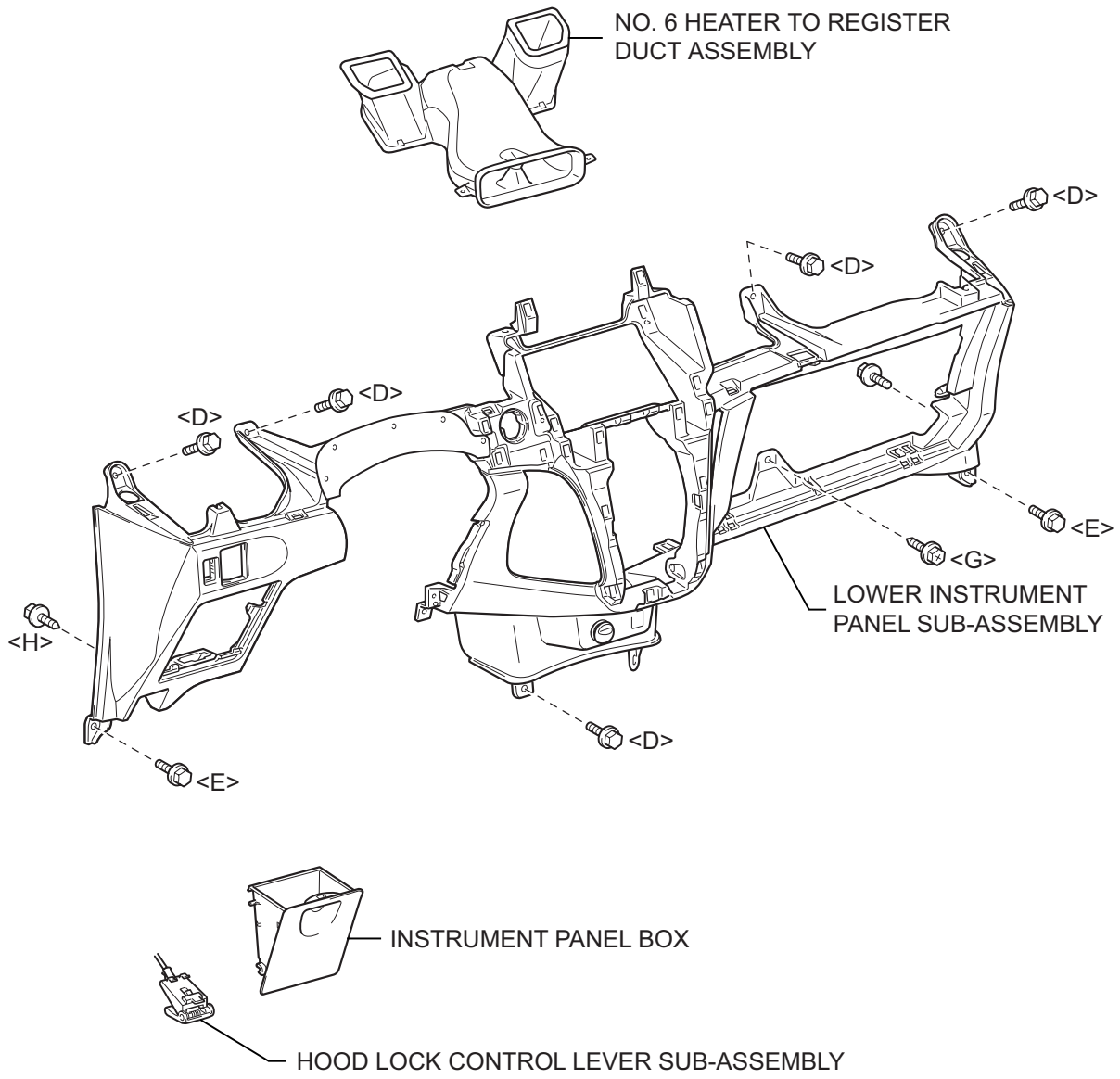

O

B108207E01

for Manual Transaxle:

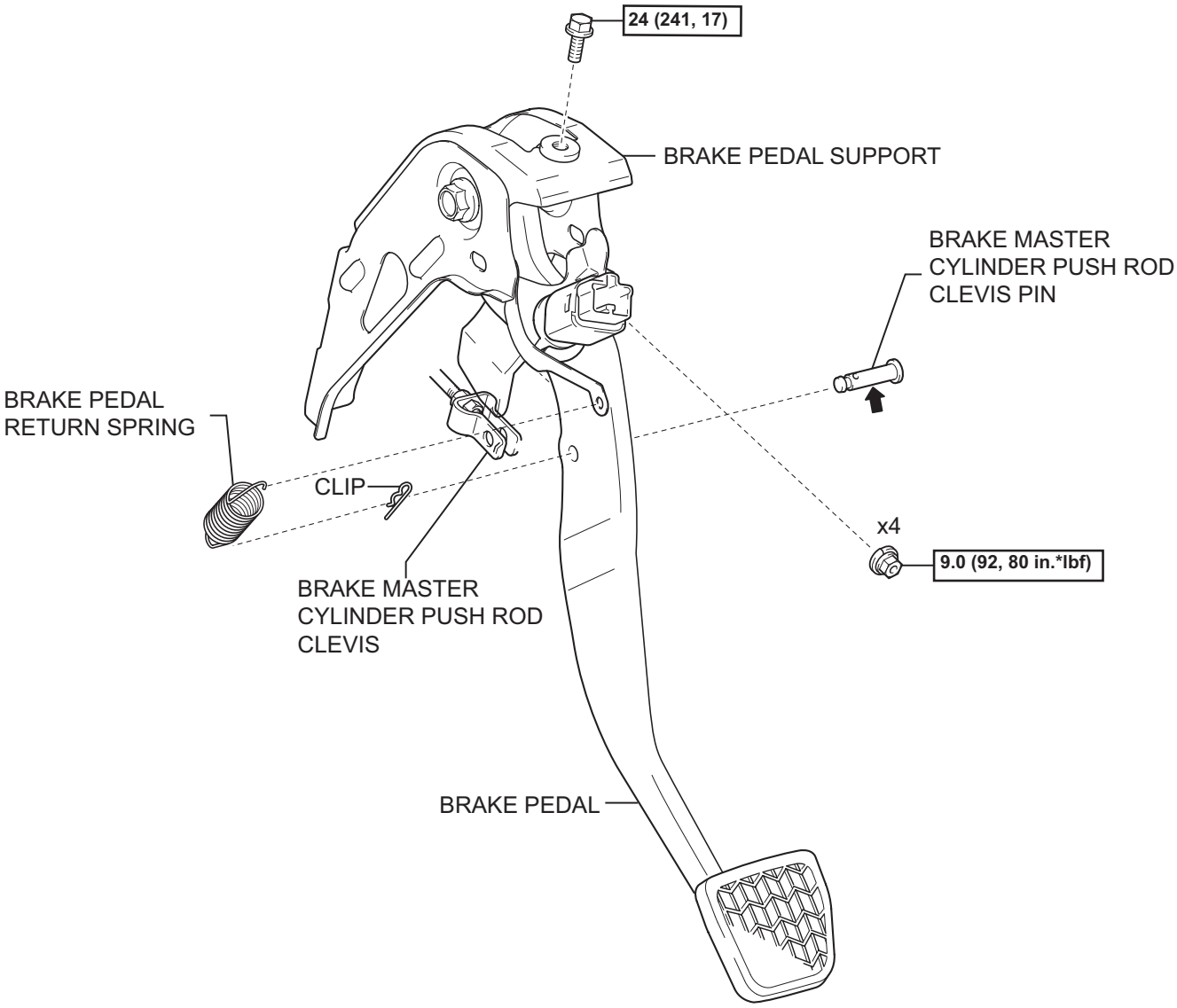

N*m (kgf*cm, ft.*lbf) : Specified torque ⬅ Lithium Soap base glycol grease

P

C118552E01

for Automtic Transaxle:

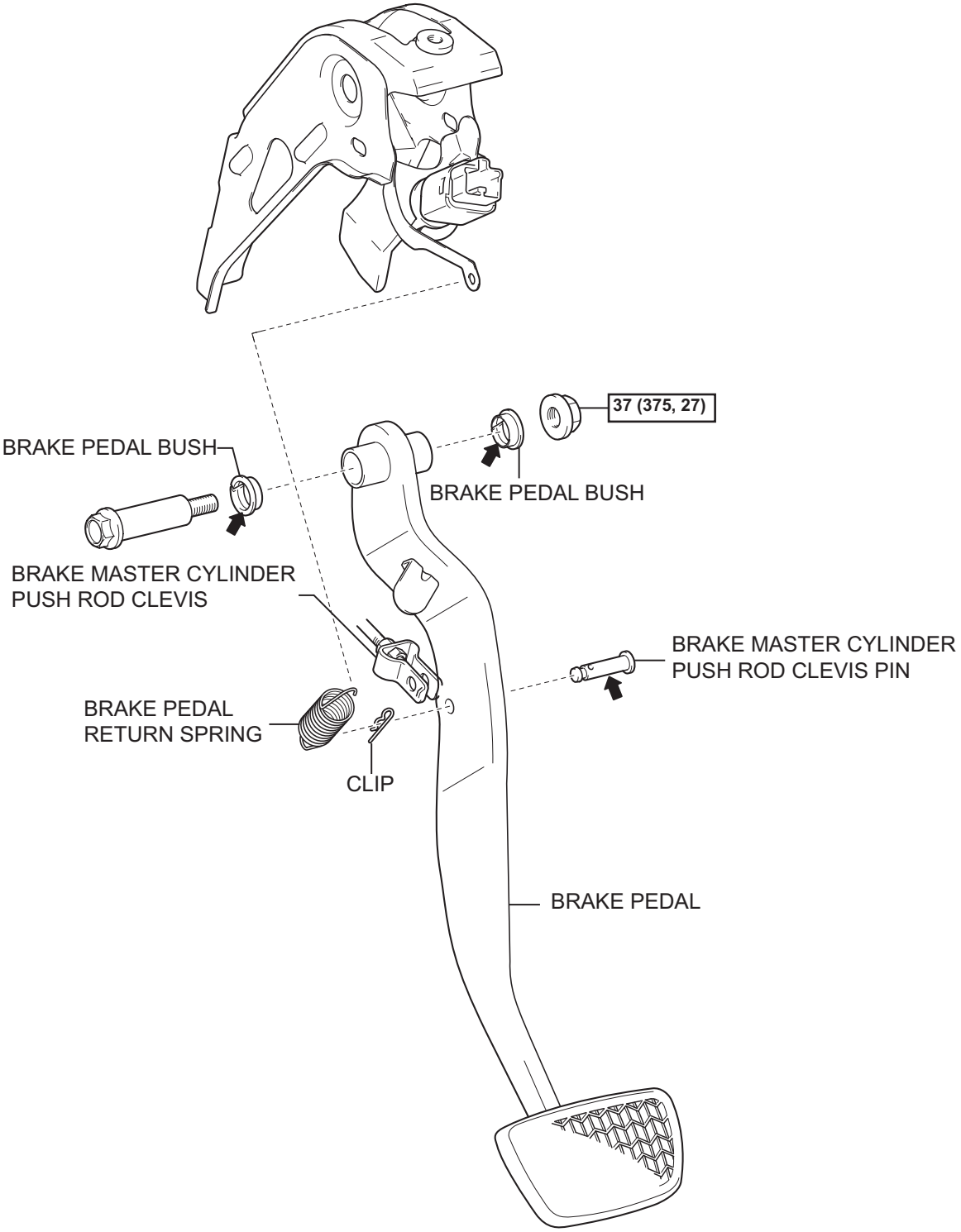

N*m (kgf*cm, ft.*lbf) : Specified torque ⬅ Lithium Soap base glycol grease

P

C118551E01

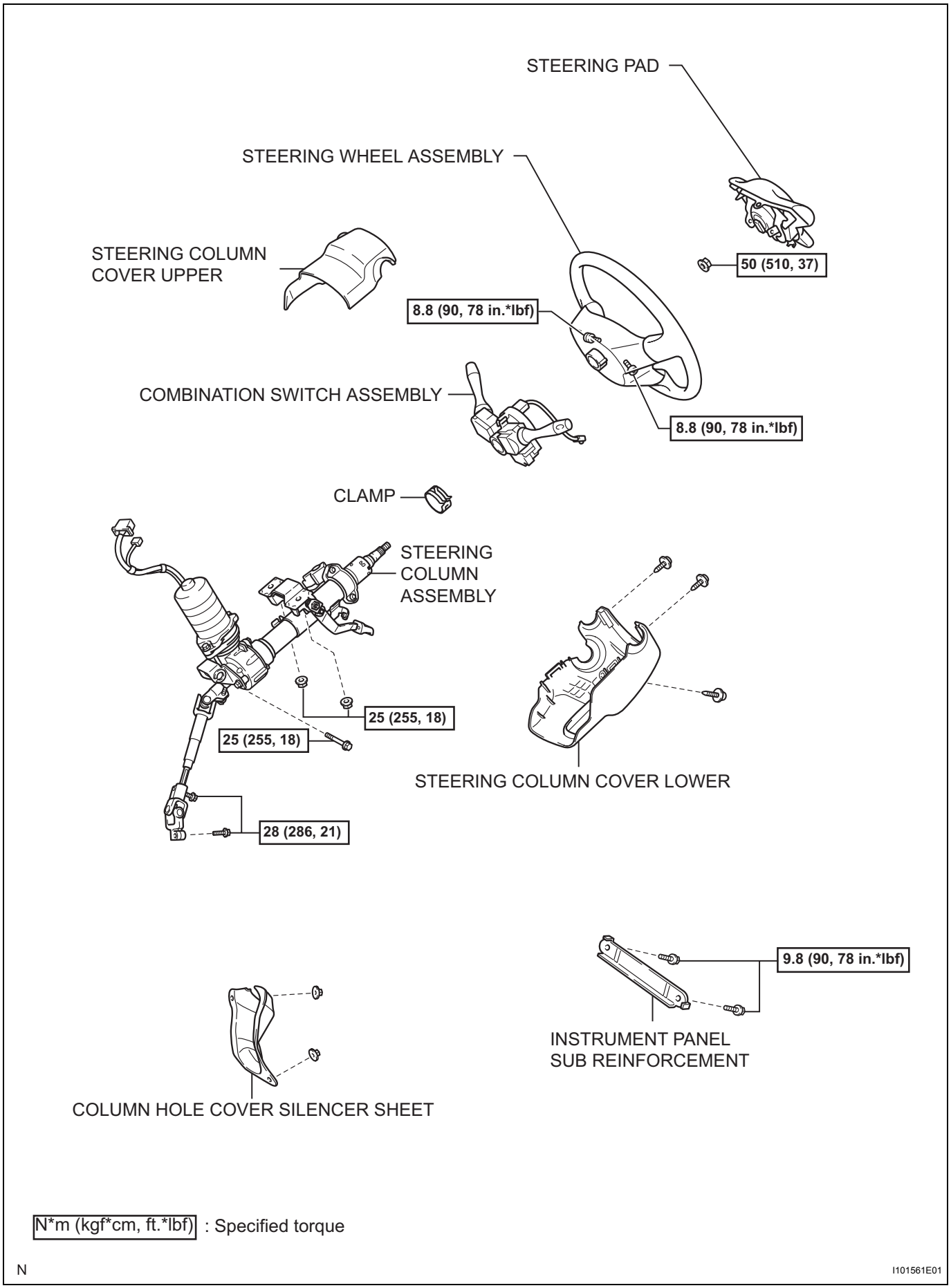

N*m (kgf*cm, ft.*lbf) : Specified torque

N

I101561E01

AC

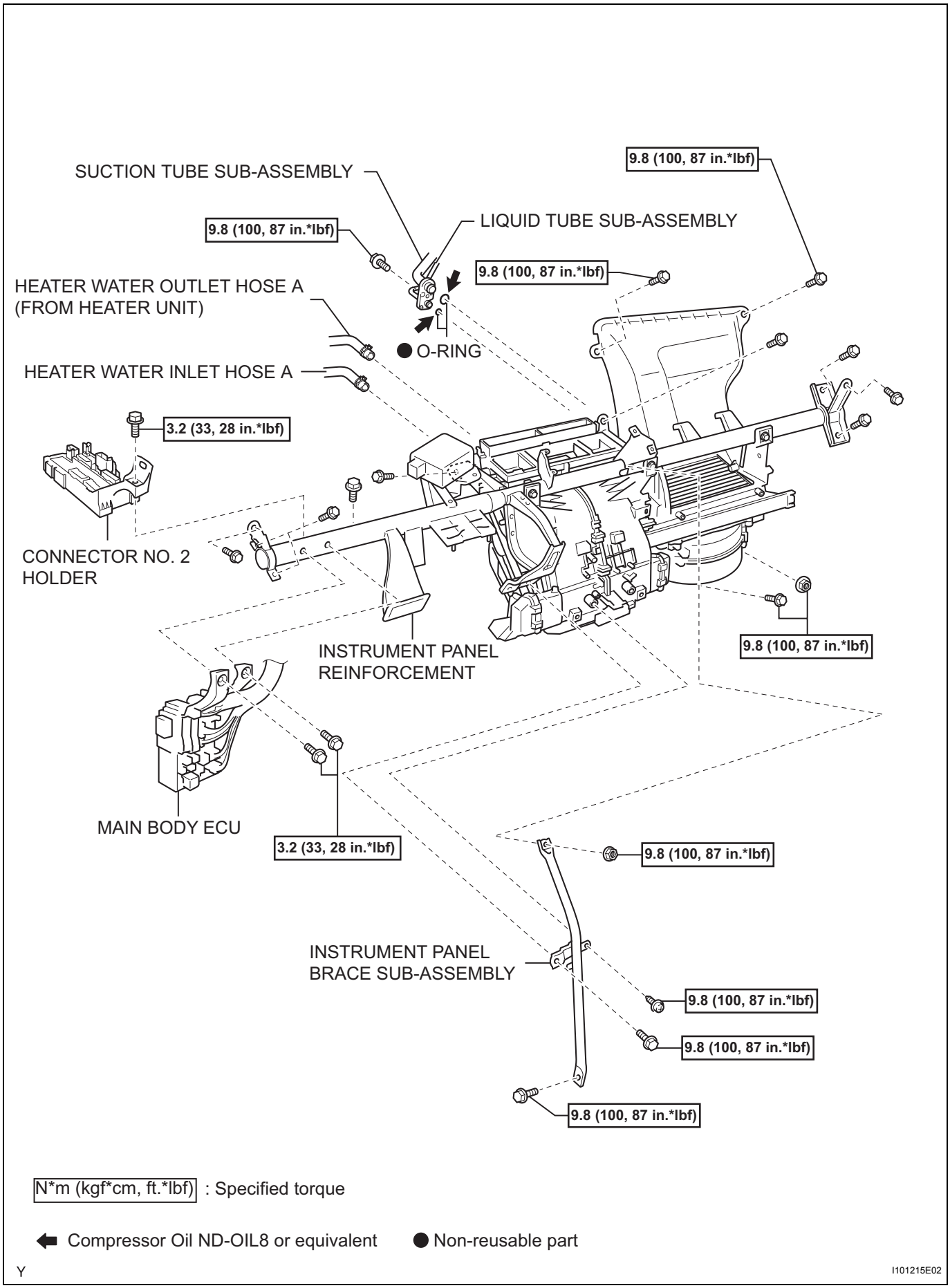
SUCTION TUBE SUB-ASSEMBLY
9.8 (100, 87 in.*lbf)
LIQUID TUBE SUB-ASSEMBLY
9.8 (100, 87 in.*lbf)
9.8 (100, 87 in.*lbf)
HEATER WATER OUTLET HOSE A
(FROM HEATER UNIT)
● O-RING
HEATER WATER INLET HOSE A
3.2 (33, 28 in.*lbf)
CONNECTOR NO. 2
HOLDER
INSTRUMENT PANEL
REINFORCEMENT
9.8 (100, 87 in.*lbf)
MAIN BODY ECU
3.2 (33, 28 in.*lbf)
9.8 (100, 87 in.*lbf)
INSTRUMENT PANEL
BRACE SUB-ASSEMBLY
9.8 (100, 87 in.*lbf)
9.8 (100, 87 in.*lbf)
9.8 (100, 87 in.*lbf)
N*m (kgf*cm, ft.*lbf) : Specified torque
Compressor Oil ND-OIL8 or equivalent
● Non-reusable part
Y
I101215E02

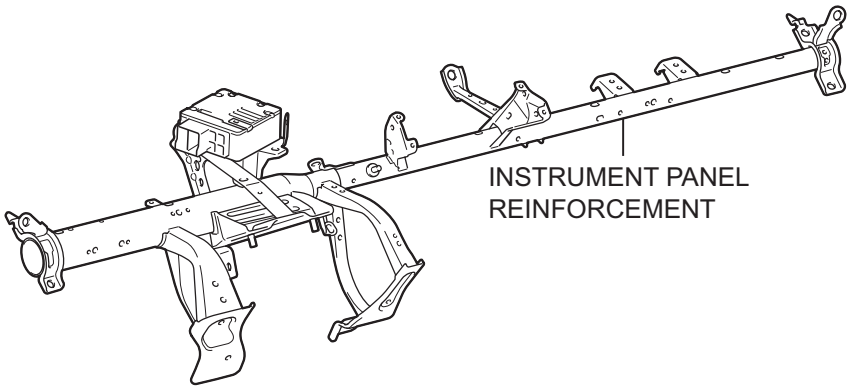

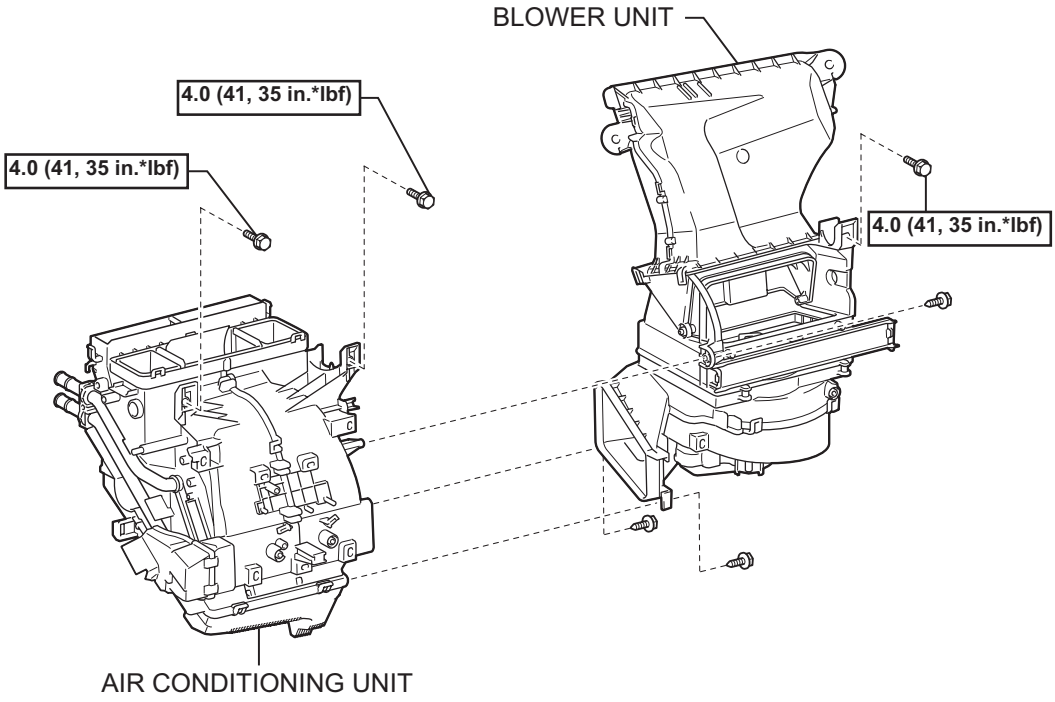

N*m (kgf*cm, ft.*lbf) : Specified torque

AC

P

I101573E01

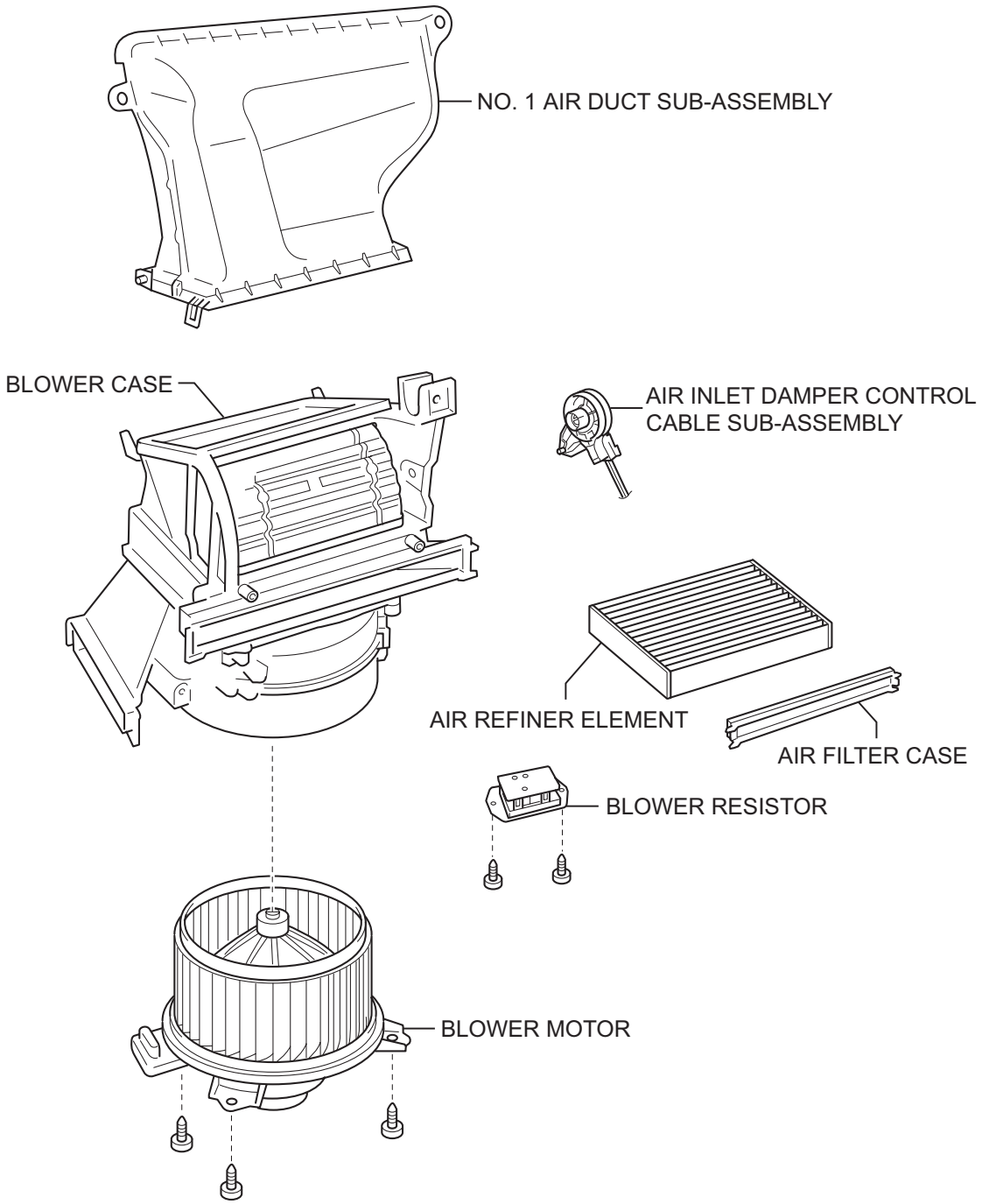

Y

I101220E01

REMOVAL

CAUTION:
Some of these service operations affect the SRS airbag system. Read the precautionary notices concerning the SRS airbag system before servicing (See page RS-1).
HINT:
Use the same procedure for both the RH and LH sides.

1. **DISCONNECT CABLE FROM NEGATIVE BATTERY TERMINAL**
   Wait for at least 90 seconds after disconnecting the cable to prevent the airbag from working.
2. **DISCHARGE REFRIGERANT FROM REFRIGERATION SYSTEM (See page AC-66)**
3. **DRAIN ENGINE COOLANT (See page CO-8)**
4. **REMOVE FRONT WIPER ARM HEAD CAP (See page WW-17)**
5. **REMOVE FRONT WIPER ARM AND BLADE ASSEMBLY LH (See page WW-17)**
6. **REMOVE FRONT WIPER ARM AND BLADE ASSEMBLY RH (See page WW-17)**
7. **REMOVE HOOD TO COWL TOP SEAL (See page WW-18)**
8. **REMOVE COWL TOP VENTILATOR LOUVER SUB-ASSEMBLY (See page WW-18)**
9. **REMOVE COWL TOP VENTILATOR LOUVER LH (See page WW-18)**
10. **REMOVE FRONT WIPER MOTOR AND LINK (See page WW-19)**
11. **REMOVE NO. 2 COWL TO REGISTER DUCT SUB-ASSEMBLY (See page EM-122)**
12. **REMOVE COWL TOP PANEL OUTER (See page EM-123)**
13. **DISCONNECT SUCTION TUBE SUB-ASSEMBLY (See page AC-124)**
14. **DISCONNECT LIQUID TUBE SUB-ASSEMBLY (See page AC-124)**
15. **DISCONNECT HEATER WATER OUTLET HOSE A (FROM HEATER UNIT) (See page AC-125)**
16. **DISCONNECT HEATER WATER INLET HOSE A (See page AC-125)**
17. **BOLTS, SCREWS AND NUTS TABLE (See page IP-66)**
18. **REMOVE INSTRUMENT PANEL FINISH PANEL END LH (See page WW-17)**
19. **REMOVE INSTRUMENT PANEL FINISH PANEL END RH (See page WW-17)**

20. **REMOVE INSTRUMENT CLUSTER FINISH PANEL (See page ME-145)**
21. **REMOVE COMBINATION METER ASSEMBLY (See page ME-146)**
22. **REMOVE INSTRUMENT CLUSTER FINISH PANEL SUB-ASSEMBLY CENTER (See page AC-250)**
23. **REMOVE RADIO TUNER OPENING COVER (w/o Radio Receiver) (See page AC-125)**
24. **REMOVE RADIO RECEIVER ASSEMBLY (See page AV-44)**
25. **REMOVE AIR CONDITIONER PANEL SUB-ASSEMBLY (See page AC-250)**
26. **DISCONNECT AIR MIX DAMPER CONTROL CABLE SUB-ASSEMBLY (See page AC-251)**
27. **DISCONNECT DEFROSTER DAMPER CONTROL CABLE SUB-ASSEMBLY (See page AC-251)**
28. **DISCONNECT AIR INLET DAMPER CONTROL CABLE SUB-ASSEMBLY (See page AC-251)**
29. **REMOVE FRONT DOOR OPENING TRIM WEATHERSTRIP RH (See page IR-50)**
30. **REMOVE FRONT DOOR OPENING TRIM WEATHERSTRIP LH (See page IR-50)**
31. **REMOVE FRONT PILLAR GARNISH RH (See page IR-58)**
32. **REMOVE FRONT PILLAR GARNISH LH (See page IR-59)**
33. **REMOVE NO. 1 SWITCH HOLE BASE (See page IP-20)**
34. **REMOVE GLOVE COMPARTMENT DOOR ASSEMBLY (See page IP-20)**
35. **REMOVE UPPER INSTRUMENT PANEL SUB-ASSEMBLY (See page IP-21)**
36. **REMOVE FRONT DOOR SCUFF PLATE RH (See page IR-49)**
37. **REMOVE FRONT DOOR SCUFF PLATE LH (See page IR-49)**
38. **REMOVE INSTRUMENT PANEL UNDER COVER SUB-ASSEMBLY RH (See page IR-50)**
39. **REMOVE INSTRUMENT PANEL UNDER COVER SUB-ASSEMBLY LH (See page IR-50)**
40. **REMOVE COWL SIDE TRIM BOARD RH (See page IR-50)**
41. **REMOVE COWL SIDE TRIM BOARD LH (See page IR-50)**

42. **REMOVE SHIFT LEVER KNOB SUB-ASSEMBLY (for Manual Transaxle) (See page IP-68)**
43. **REMOVE SHIFTING HOLE COVER SUB-ASSEMBLY (for Manual Transaxle) (See page IP-68)**
44. **REMOVE CONSOLE BOX REAR COVER (See page IP-68)**
45. **REMOVE CONSOLE BOX CARPET (See page IP-68)**
46. **REMOVE CONSOLE BOX ASSEMBLY REAR (See page IP-69)**
47. **REMOVE INSTRUMENT PANEL FINISH PANEL SUB-ASSEMBLY LOWER (See page IP-69)**
48. **REMOVE INSTRUMENT PANEL BOX (See page IP-70)**
49. **REMOVE NO. 6 HEATER TO REGISTER DUCT ASSEMBLY (See page IP-70)**
50. **DISCONNECT ANTENNA CORD SUB-ASSEMBLY (See page IP-70)**
51. **SEPARATE HOOD LOCK CONTROL LEVER SUB-ASSEMBLY (See page IP-71)**
52. **REMOVE LOWER INSTRUMENT PANEL SUB-ASSEMBLY (See page IP-71)**
53. **POSITION FRONT WHEELS FACING STRAIGHT AHEAD**
54. **REMOVE STEERING PAD (See page RS-309)**
55. **REMOVE STEERING WHEEL ASSEMBLY (See page SR-30)**
56. **REMOVE STEERING COLUMN COVER (See page SR-30)**
57. **REMOVE COMBINATION SWITCH ASSEMBLY (See page SR-31)**
58. **DISCONNECT POWER STEERING ECU (See page SR-32)**
59. **REMOVE INSTRUMENT PANEL SUB REINFORCEMENT (See page SR-32)**
60. **REMOVE COLUMN HOLE COVER SILENCER SHEET (See page SR-32)**
61. **SEPARATE STEERING SLIDING YOKE SUB-ASSEMBLY (See page AC-127)**
62. **REMOVE BRAKE PEDAL (for Automatic Transaxle) (See page SR-32)**
63. **REMOVE BRAKE MASTER CYLINDER PUSH ROD CLEVIS (for Manual Transaxle) (See page BR-20)**
64. **REMOVE BRAKE PEDAL SUPPORT SUB-ASSEMBLY (for Manual Transaxle) (See page BR-21)**

65. REMOVE STEERING COLUMN ASSEMBLY (See page SR-33)

66. REMOVE DEFROSTER NOZZLE ASSEMBLY (See page AC-127)

67. REMOVE REAR NO. 2 AIR DUCT (for Cold Area Specification Vehicles) (See page AC-128)

68. REMOVE REAR NO. 1 AIR DUCT (for Cold Area Specification Vehicles) (See page AC-129)

69. REMOVE REAR NO. 3 AIR DUCT (for Cold Area Specification Vehicles) (See page AC-129)

70. REMOVE INSTRUMENT PANEL BRACE SUB-ASSEMBLY (See page AC-129)

71. SEPARATE MAIN BODY ECU (See page AC-130)

72. SEPARATE CONNECTOR NO. 2 HOLDER (See page AC-130)

73. REMOVE INSTRUMENT PANEL REINFORCEMENT (See page AC-131)

74. REMOVE BLOWER UNIT

(a) Remove the 3 screws and the blower unit.

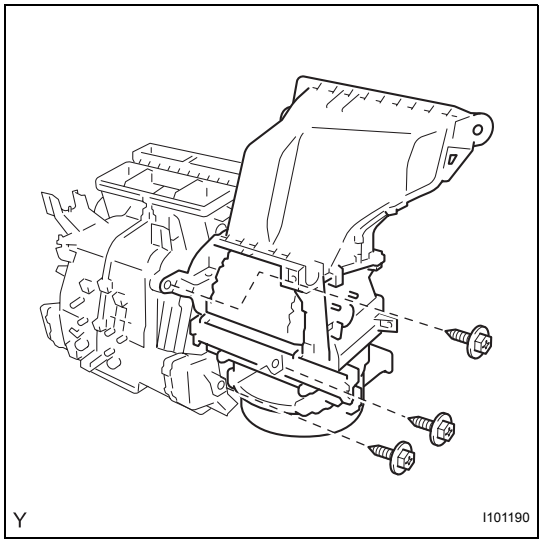

DISASSEMBLY

1. REMOVE NO. 1 AIR DUCT SUB-ASSEMBLY

(a) Disengage the 2 claws and remove the air duct.

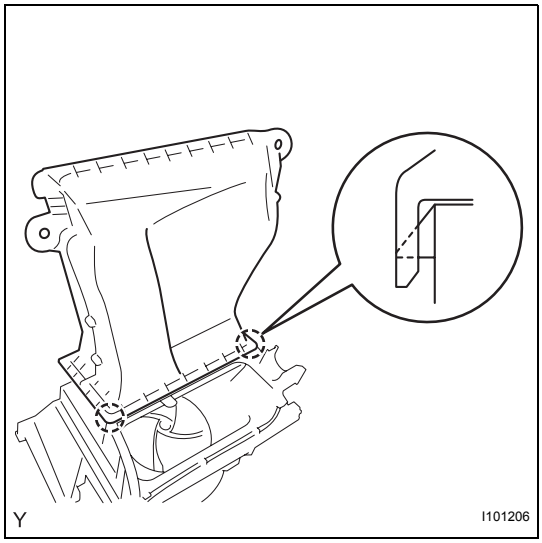

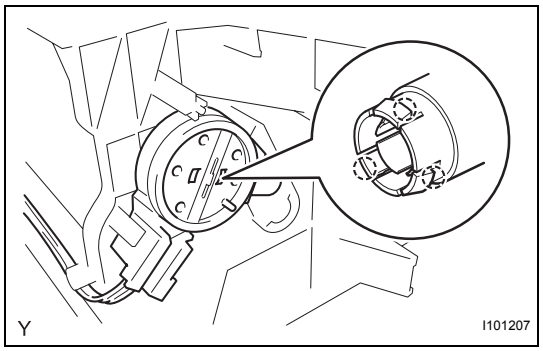

2. REMOVE AIR INLET DAMPER CONTROL CABLE SUB-ASSEMBLY

(a) Disengage the 3 claws and remove the air inlet damper control cable.

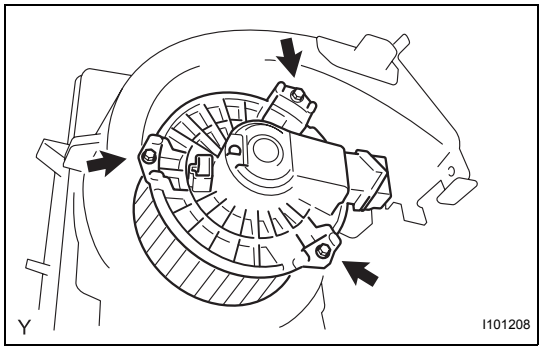

3. REMOVE BLOWER MOTOR

(a) Remove the 3 screws and the blower motor.

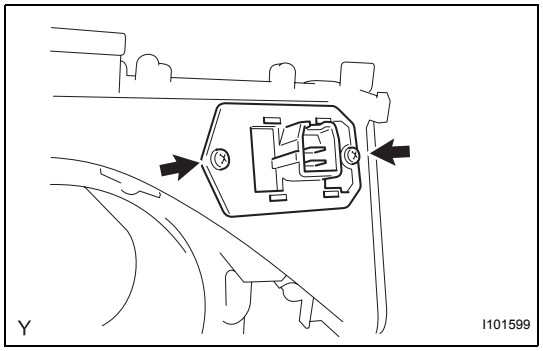

4. REMOVE BLOWER RESISTOR

(a) Remove the 2 screws and the blower resistor.

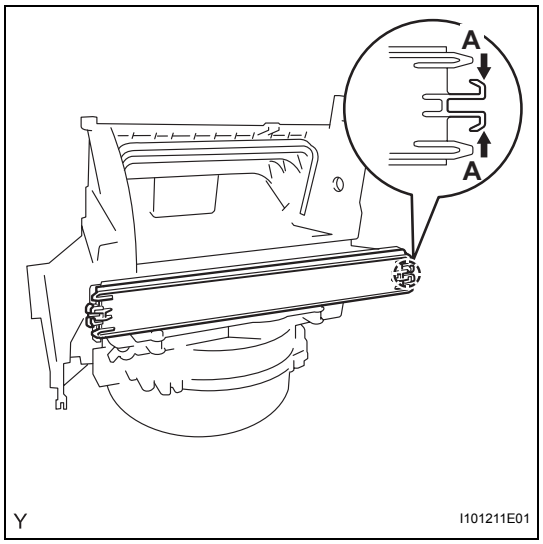

5. REMOVE AIR FILTER CASE

(a) Pinch portion A to disengage the claw and remove the air filter case.

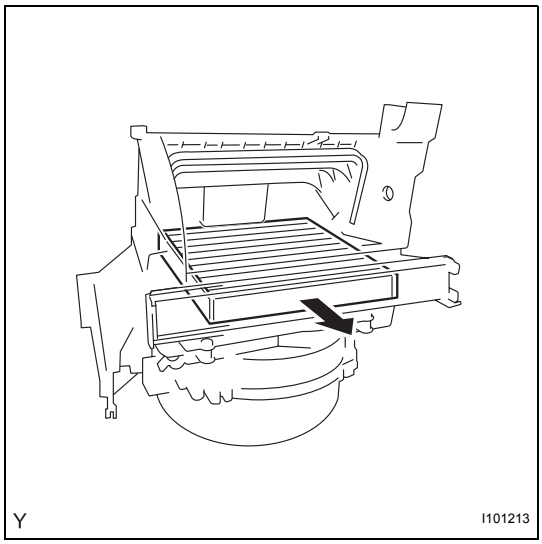

6. REMOVE AIR REFINER ELEMENT

(a) Remove the air refiner element from the blower assembly.

REASSEMBLY

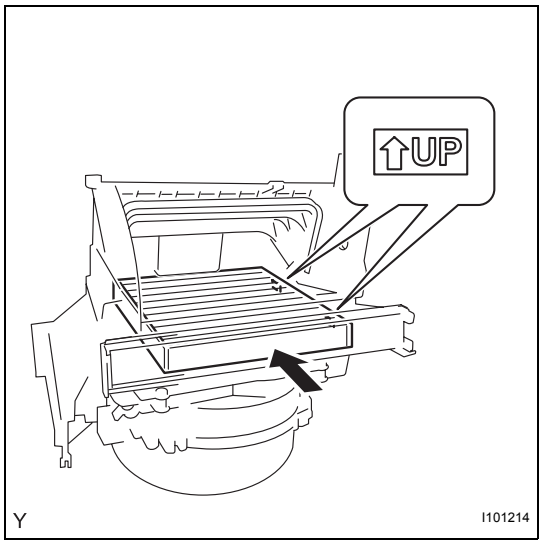

1. INSTALL AIR REFINER ELEMENT

(a) Install the air refiner element into the blower assembly.
NOTICE:
Install the air refiner element with its UP mark oriented in the correct direction.

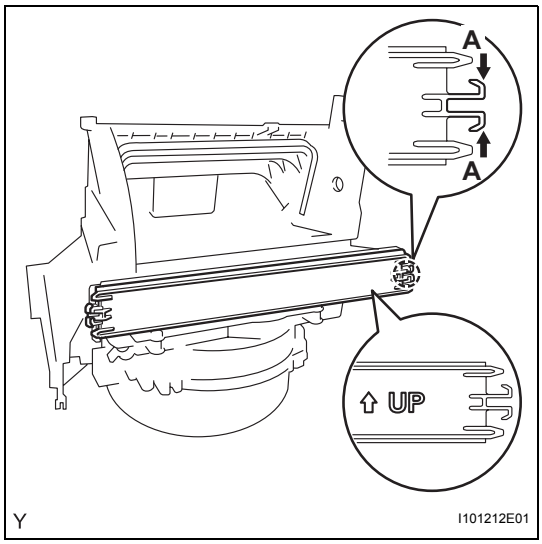

2. INSTALL AIR FILTER CASE

(a) Insert the rib of the air filter case into the blower assembly.
NOTICE:
Install the air filter case with its UP mark oriented in the correct direction.

(b) Pinch portion A to engage the claw and install the air filter case.

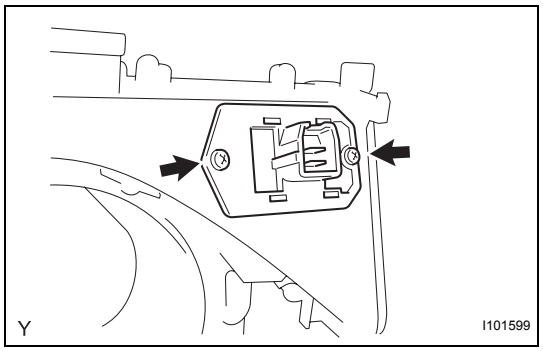

3. INSTALL BLOWER RESISTOR

(a) Install the blower resistor with the 2 screws.

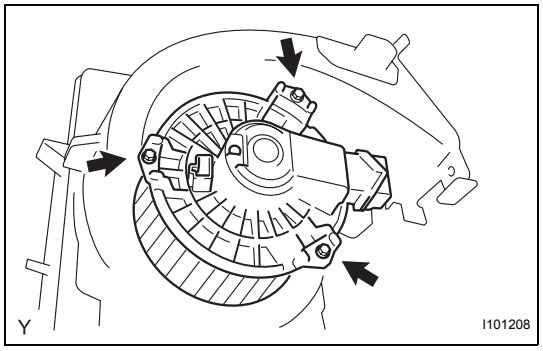

4. INSTALL BLOWER MOTOR

(a) Install the blower motor with the 3 screws.

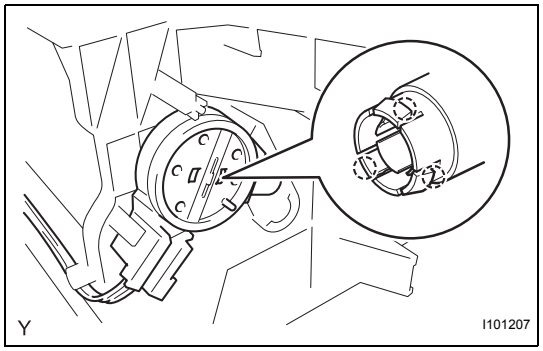

5. INSTALL AIR INLET DAMPER CONTROL CABLE SUB-ASSEMBLY

(a) Engage the 3 claws and install the air inlet damper control cable.

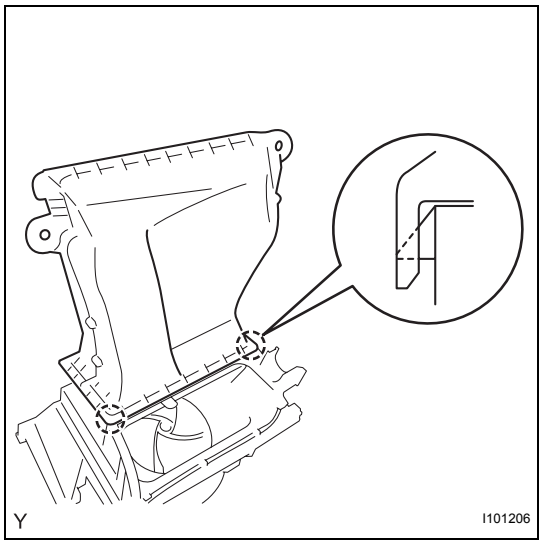

6. INSTALL NO. 1 AIR DUCT SUB-ASSEMBLY

(a) Engage the 2 claws and install the air duct.

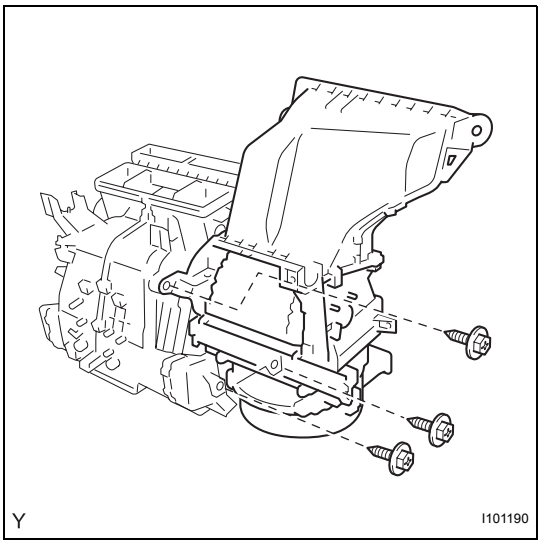

INSTALLATION

1. **INSTALL BLOWER UNIT**
   (a) Install the blower unit with the 3 screws.
2. **INSTALL INSTRUMENT PANEL REINFORCEMENT (See page AC-141)**
3. **INSTALL CONNECTOR NO. 2 HOLDER (See page AC-145)**
4. **INSTALL MAIN BODY ECU (See page AC-145)**
5. **INSTALL INSTRUMENT PANEL BRACE SUB-ASSEMBLY (See page AC-146)**
6. **INSTALL REAR NO. 3 AIR DUCT (for Cold Area Specification Vehicles) (See page AC-146)**
7. **INSTALL REAR NO. 1 AIR DUCT (for Cold Area Specification Vehicles) (See page AC-147)**
8. **INSTALL REAR NO. 2 AIR DUCT (for Cold Area Specification Vehicles) (See page AC-147)**
9. **INSTALL DEFROSTER NOZZLE ASSEMBLY (See page AC-147)**
10. **INSTALL STEERING COLUMN ASSEMBLY (See page SR-38)**
11. **INSTALL BRAKE PEDAL SUPPORT SUB-ASSEMBLY (for Manual Transaxle) (See page BR-21)**
12. **INSTALL BRAKE MASTER CYLINDER PUSH ROD CLEVIS (for Manual Transaxle) (See page BR-21)**
13. **INSTALL BRAKE PEDAL (for Automatic Transaxle) (See page SR-38)**
14. **INSTALL STEERING SLIDING YOKE SUB-ASSEMBLY (See page AC-148)**
15. **INSTALL COLUMN HOLE COVER SILENCER SHEET (See page SR-39)**
16. **INSTALL INSTRUMENT PANEL SUB REINFORCEMENT (See page SR-39)**
17. **CONNECT POWER STEERING ECU (See page SR-39)**
18. **INSTALL COMBINATION SWITCH ASSEMBLY (See page SR-40)**
19. **INSTALL STEERING COLUMN COVER (See page SR-40)**
20. **INSTALL STEERING WHEEL ASSEMBLY (See page SR-41)**
21. **INSTALL STEERING PAD (See page RS-310)**
22. **INSTALL LOWER INSTRUMENT PANEL SUB-ASSEMBLY (See page IP-75)**

23. **CONNECT HOOD LOCK CONTROL LEVER SUB-ASSEMBLY (See page IP-77)**
24. **CONNECT ANTENNA CORD SUB-ASSEMBLY (See page IP-77)**
25. **INSTALL NO. 6 HEATER TO REGISTER DUCT ASSEMBLY (See page IP-77)**
26. **INSTALL INSTRUMENT PANEL BOX (See page IP-78)**
27. **INSTALL INSTRUMENT PANEL FINISH PANEL SUB-ASSEMBLY LOWER (See page IP-78)**
28. **INSTALL CONSOLE BOX ASSEMBLY REAR (See page IP-79)**
29. **INSTALL CONSOLE BOX CARPET (See page IP-79)**
30. **INSTALL CONSOLE BOX REAR COVER (See page IP-79)**
31. **INSTALL SHIFTING HOLE COVER SUB-ASSEMBLY (for Manual Transaxle) (See page IP-79)**
32. **INSTALL SHIFT LEVER KNOB SUB-ASSEMBLY (for Manual Transaxle) (See page IP-80)**
33. **INSTALL COWL SIDE TRIM BOARD RH (See page IR-81)**
34. **INSTALL COWL SIDE TRIM BOARD LH (See page IR-81)**
35. **INSTALL INSTRUMENT PANEL UNDER COVER SUB-ASSEMBLY LH (See page IR-82)**
36. **INSTALL INSTRUMENT PANEL UNDER COVER SUB-ASSEMBLY RH (See page IR-81)**
37. **INSTALL FRONT DOOR SCUFF PLATE RH (See page IR-82)**
38. **INSTALL FRONT DOOR SCUFF PLATE LH (See page IR-81)**
39. **INSTALL UPPER INSTRUMENT PANEL SUB-ASSEMBLY (See page IP-29)**
40. **INSTALL GLOVE COMPARTMENT DOOR ASSEMBLY (See page IP-32)**
41. **INSTALL NO. 1 SWITCH HOLE BASE (See page IP-32)**
42. **INSTALL FRONT PILLAR GARNISH RH (See page IR-71)**
43. **INSTALL FRONT PILLAR GARNISH LH (See page IR-72)**
44. **INSTALL FRONT DOOR OPENING TRIM WEATHERSTRIP RH (See page IR-81)**
45. **INSTALL FRONT DOOR OPENING TRIM WEATHERSTRIP LH (See page IR-81)**

46. **CONNECT AIR INLET DAMPER CONTROL CABLE SUB-ASSEMBLY (See page AC-257)**
47. **CONNECT DEFROSTER DAMPER CONTROL CABLE SUB-ASSEMBLY (See page AC-257)**
48. **CONNECT AIR MIX DAMPER CONTROL CABLE SUB-ASSEMBLY (See page AC-257)**
49. **INSTALL AIR CONDITIONER PANEL SUB-ASSEMBLY (See page AC-257)**
50. **INSTALL RADIO TUNER OPENING COVER (w/o Radio Receiver) (See page AC-150)**
51. **INSTALL RADIO RECEIVER ASSEMBLY (See page AV-46)**
52. **INSTALL INSTRUMENT CLUSTER FINISH PANEL SUB-ASSEMBLY CENTER (See page AC-258)**
53. **INSTALL COMBINATION METER ASSEMBLY (See page ME-148)**
54. **INSTALL INSTRUMENT CLUSTER FINISH PANEL (See page ME-148)**
55. **INSTALL INSTRUMENT PANEL FINISH PANEL END RH (See page ME-149)**
56. **INSTALL INSTRUMENT PANEL FINISH PANEL END LH (See page ME-149)**
57. **CONNECT HEATER WATER INLET HOSE A (See page AC-150)**
58. **CONNECT HEATER WATER OUTLET HOSE A (FROM HEATER UNIT) (See page AC-150)**
59. **INSTALL LIQUID TUBE SUB-ASSEMBLY (See page AC-150)**
60. **INSTALL SUCTION TUBE SUB-ASSEMBLY (See page AC-150)**
61. **INSTALL COWL TOP PANEL OUTER (See page EM-146)**
62. **INSTALL NO. 2 COWL TO REGISTER DUCT SUB-ASSEMBLY (See page EM-147)**
63. **INSTALL FRONT WIPER MOTOR AND LINK (See page WW-21)**
64. **INSTALL COWL TOP VENTILATOR LOUVER LH (See page WW-21)**
65. **INSTALL COWL TOP VENTILATOR LOUVER SUB-ASSEMBLY (See page WW-21)**
66. **INSTALL HOOD TO COWL TOP SEAL (See page WW-22)**
67. **INSTALL FRONT WIPER ARM AND BLADE ASSEMBLY LH (See page WW-22)**

68. **INSTALL FRONT WIPER ARM AND BLADE ASSEMBLY RH (See page WW-23)**
69. **INSTALL FRONT WIPER ARM HEAD CAP (See page WW-23)**
70. **ADD ENGINE COOLANT (See page CO-8)**
71. **CONNECT CABLE TO NEGATIVE BATTERY TERMINAL**
    Torque: 5.4 N*m (55 kgf*cm)
72. **CHECK SRS WARNING LIGHT**
    RS-31
73. **CHARGE REFRIGERANT (See page AC-67)**
74. **WARM UP ENGINE (See page AC-69)**
75. **CHECK FOR ENGINE COOLANT LEAK (See page CO-1)**
76. **CHECK FOR REFRIGERANT LEAK (See page AC-69)**
77. **POSITION FRONT WHEELS FACING STRAIGHT AHEAD**

BLOWER MOTOR

COMPONENTS

for Hatchback:

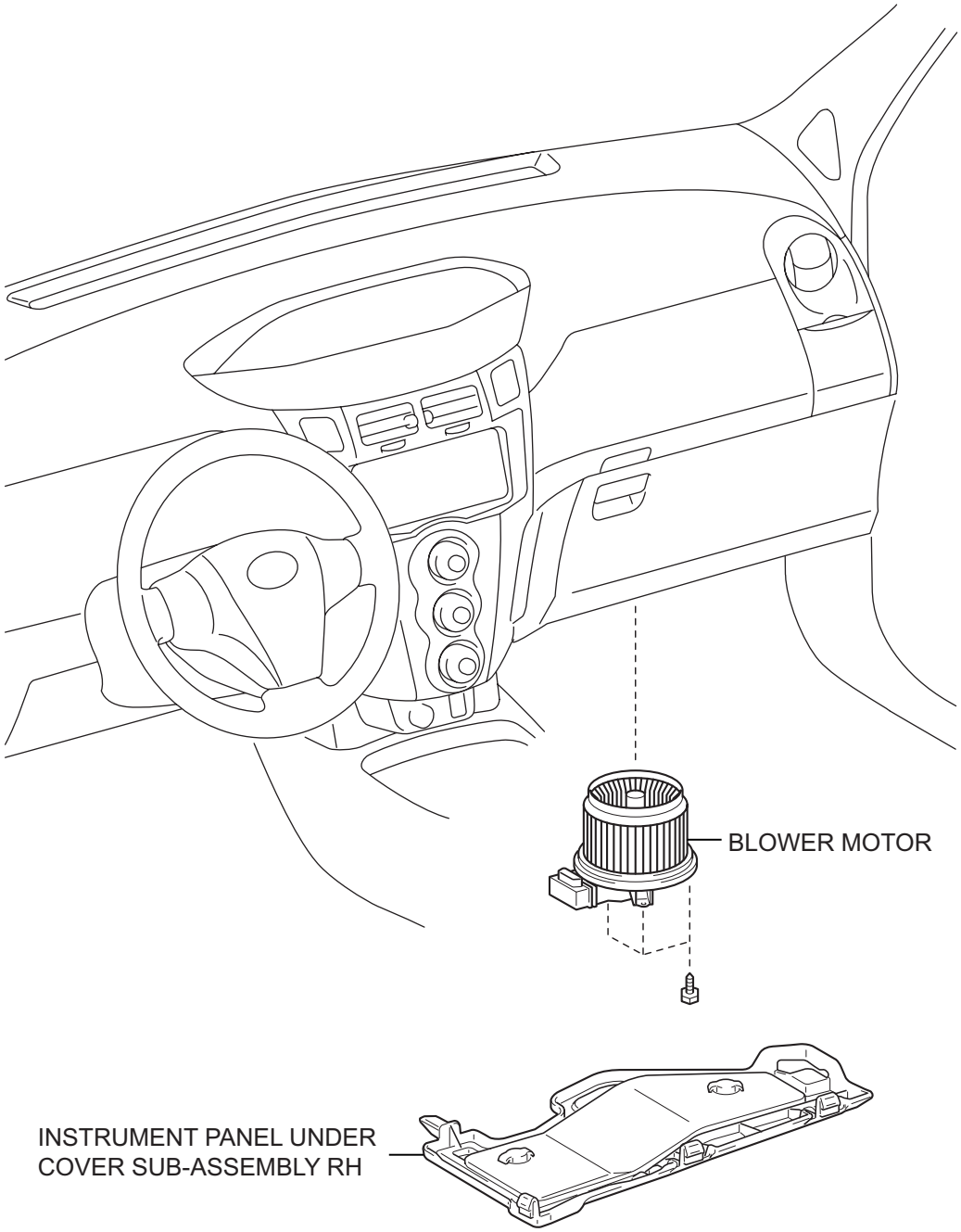

O

I101551E01

for Sedan:

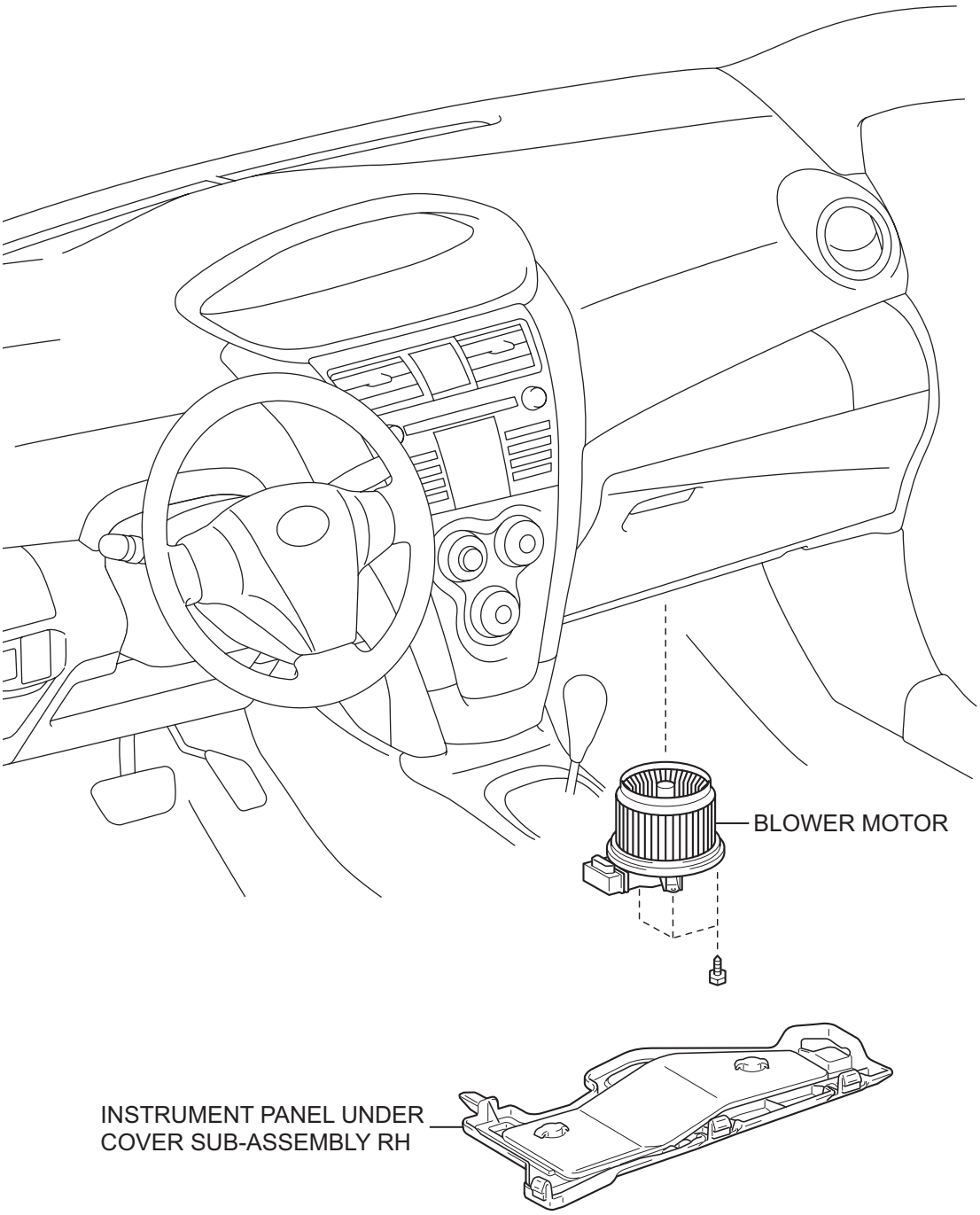

O

I102621E01

REMOVAL

1. **DISCONNECT CABLE FROM NEGATIVE BATTERY TERMINAL**
2. **REMOVE INSTRUMENT PANEL UNDER COVER SUB-ASSEMBLY RH (for Hatchback) (See page IR-50)**
3. **REMOVE INSTRUMENT PANEL UNDER COVER SUB-ASSEMBLY RH (for Sedan) (See page IR-14)**
4. **REMOVE BLOWER MOTOR**
   (a) Disconnect the connector and the clamp.
   (b) Remove the 3 screws and the blower motor.

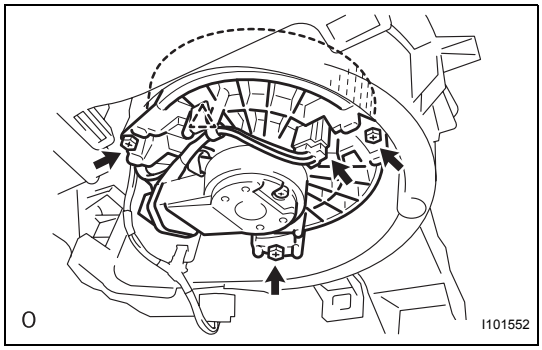

INSPECTION

1. **INSPECT BLOWER MOTOR**
   (a) Connect the positive (+) lead from the battery to terminal 2 and the negative (-) lead to terminal 1, then check that the motor operates smoothly.
   OK:
   The motor operates smoothly.
   If the operation is not as specified, replace the blower motor.
   (b) Measure the current.
   Standard current

Tester Connection	Condition	Specified Condition
1 - 2	Blower motor operates	1 to 3 A

   If the current value is not as specified, replace the blower motor.

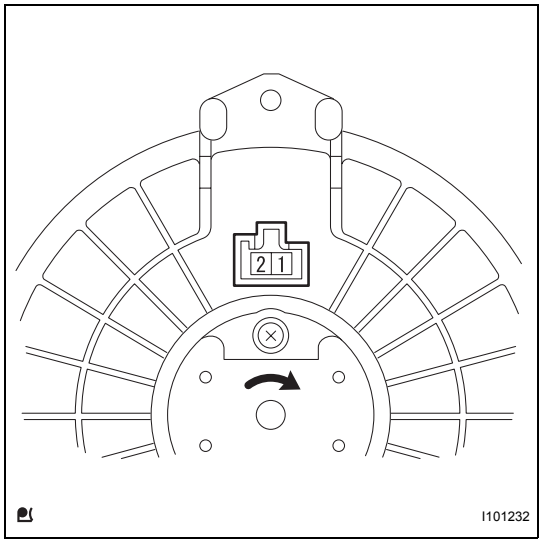

INSTALLATION

1. **INSTALL BLOWER MOTOR**
   (a) Install the blower motor with the 3 screws.
   (b) Connect the connector and the clamp.
2. **INSTALL INSTRUMENT PANEL UNDER COVER SUB-ASSEMBLY RH (for Hatchback) (See page IR-81)**
3. **INSTALL INSTRUMENT PANEL UNDER COVER SUB-ASSEMBLY RH (for Sedan) (See page IR-35)**
4. **CONNECT CABLE TO NEGATIVE BATTERY TERMINAL**
   Torque: 5.4 N*m (55 kgf*cm, 48 in.*lbf)

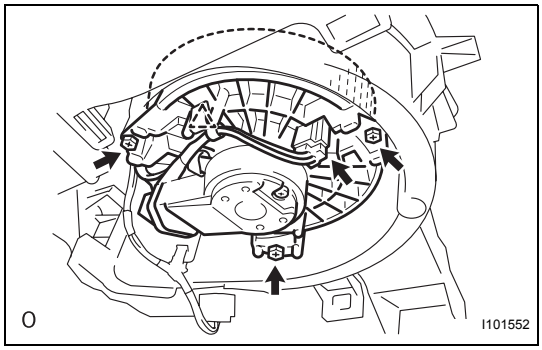

BLOWER RESISTOR

COMPONENTS

for Hatchback:

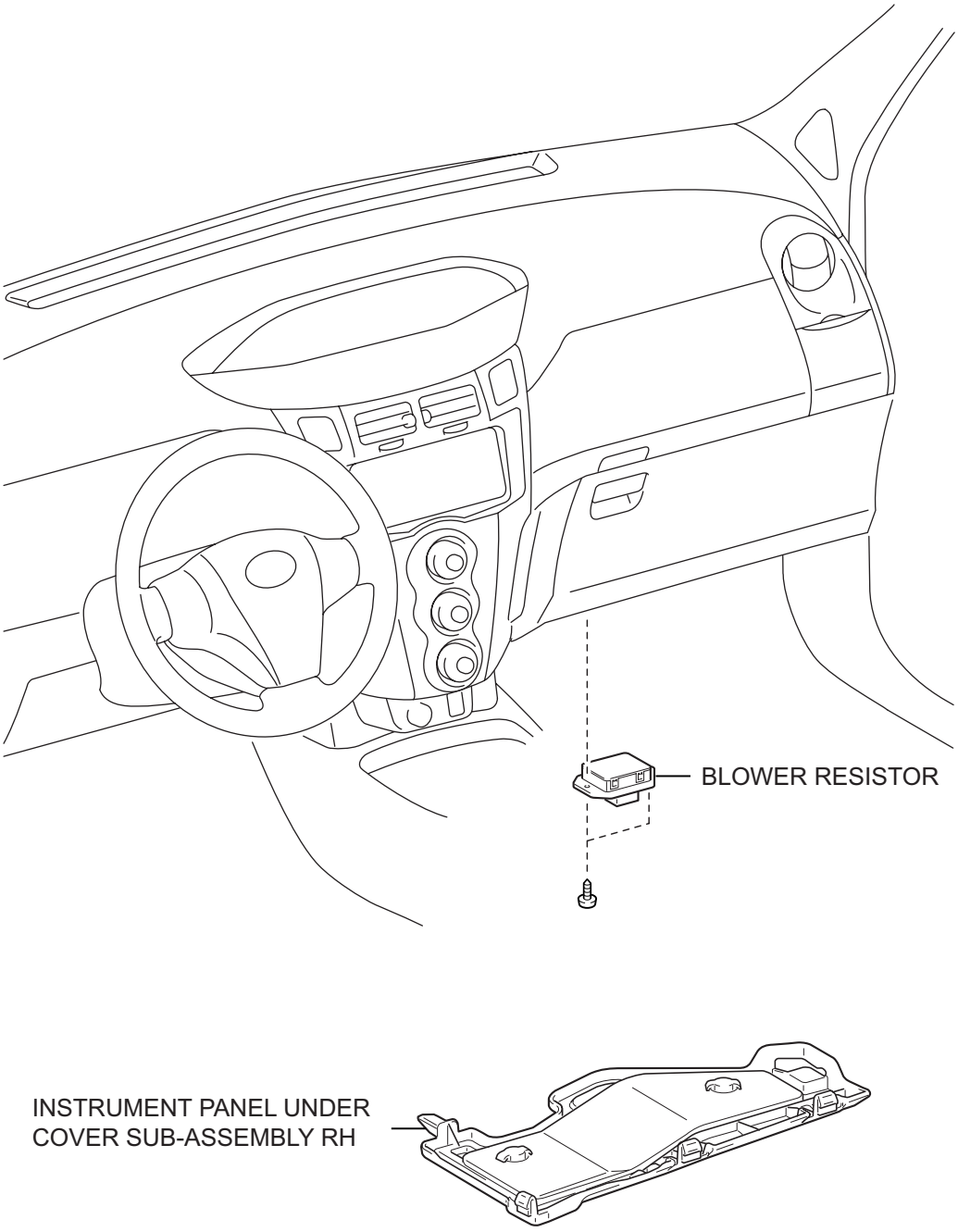

O

I101554E01

for Sedan:

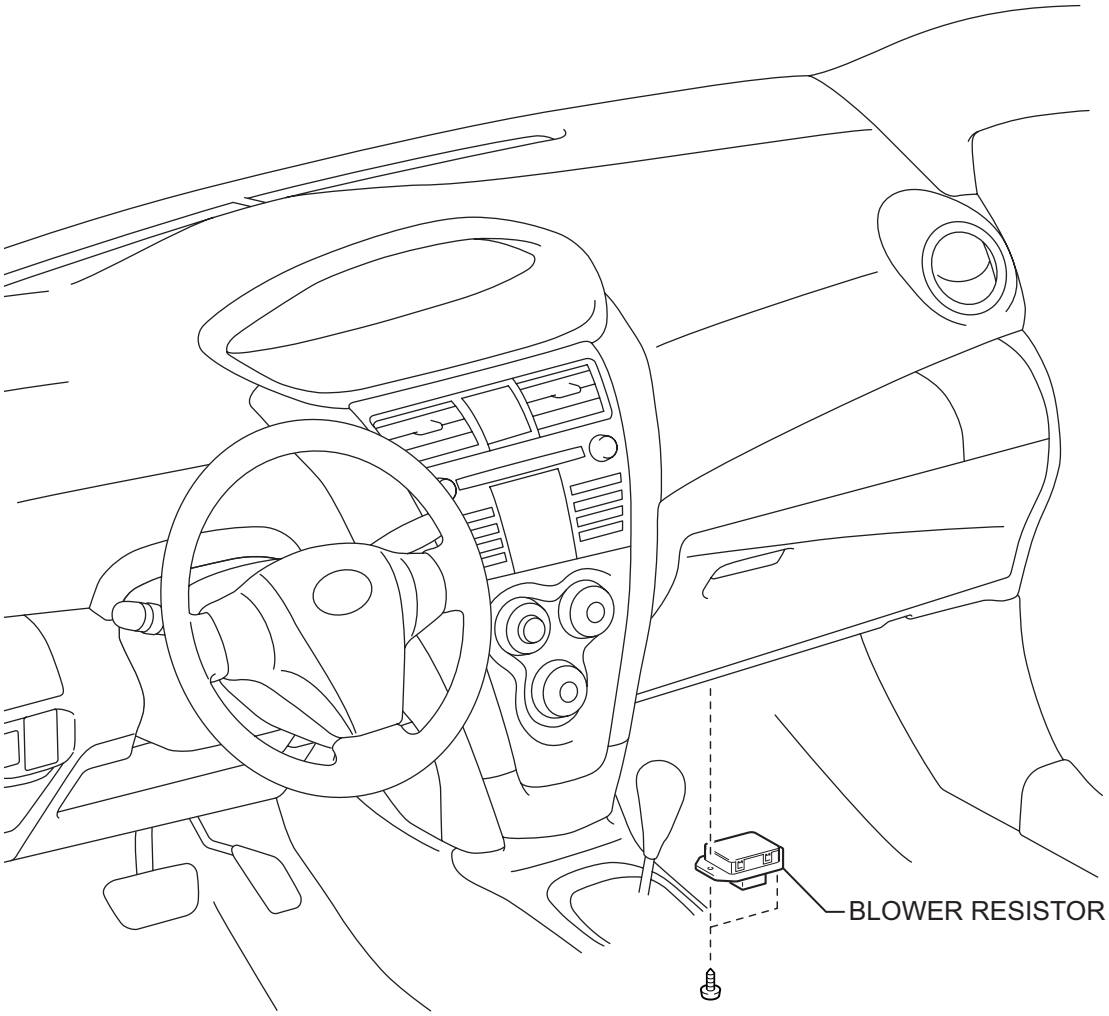
BLOWER RESISTOR

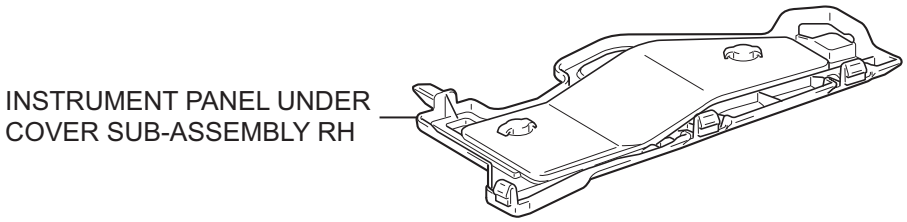
INSTRUMENT PANEL UNDER
COVER SUB-ASSEMBLY RH

REMOVAL

1. **DISCONNECT CABLE FROM NEGATIVE BATTERY TERMINAL**
2. **REMOVE INSTRUMENT PANEL UNDER COVER SUB-ASSEMBLY RH (for Hatchback) (See page IR-50)**
3. **REMOVE INSTRUMENT PANEL UNDER COVER SUB-ASSEMBLY RH (for Sedan) (See page IR-14)**
4. **REMOVE BLOWER RESISTOR**
   (a) Pull back the floor carpet.

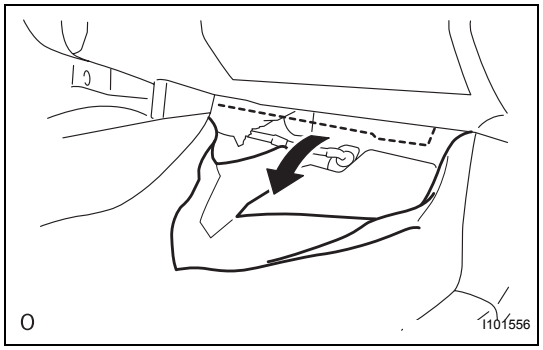

   (b) Disconnect the connector.
   (c) Remove the 2 screws and the blower resistor.

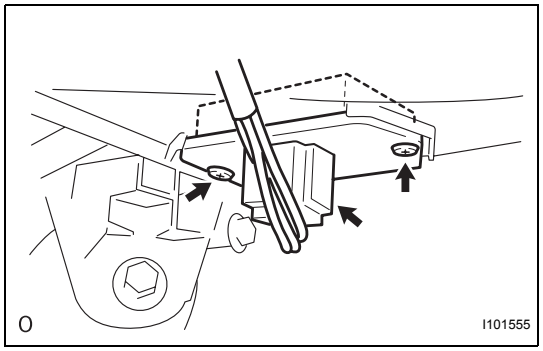

INSPECTION

1. **INSPECT BLOWER RESISTOR**
   (a) Measure the resistance.
   Standard resistance

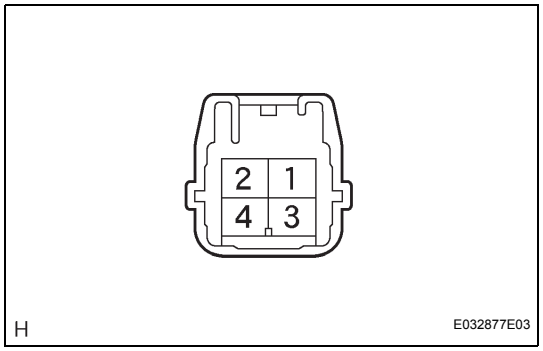

Tester Connection	Specified Condition
1 - 4	3.12 to 3.60 Ω
3 - 4	1.45 to 1.67 Ω
2 - 4	0.52 to 0.60 Ω

If the resistance value is not as specified, replace the blower resistor.

INSTALLATION

1. **INSTALL BLOWER RESISTOR**
   (a) Install the blower resistor with the 2 screws.
   (b) Connect the connector.

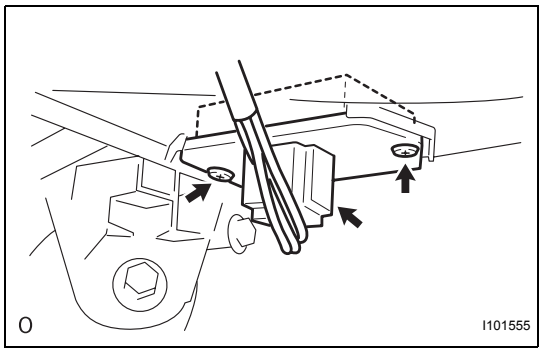

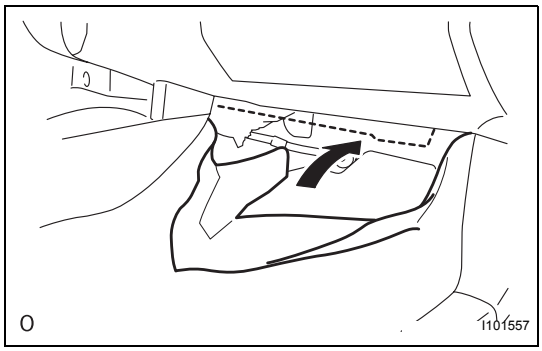

(c) Install the floor carpet.

2. **INSTALL INSTRUMENT PANEL UNDER COVER SUB-ASSEMBLY RH (for Hatchback) (See page IR-81)**

3. **INSTALL INSTRUMENT PANEL UNDER COVER SUB-ASSEMBLY RH (for Sedan) (See page IR-35)**

4. **CONNECT CABLE TO NEGATIVE BATTERY TERMINAL**
Torque: 5.4 N*m (55 kgf*cm, 48 in.*lbf)

COMPRESSOR AND PULLEY (for 1NZ-FE)

COMPONENTS

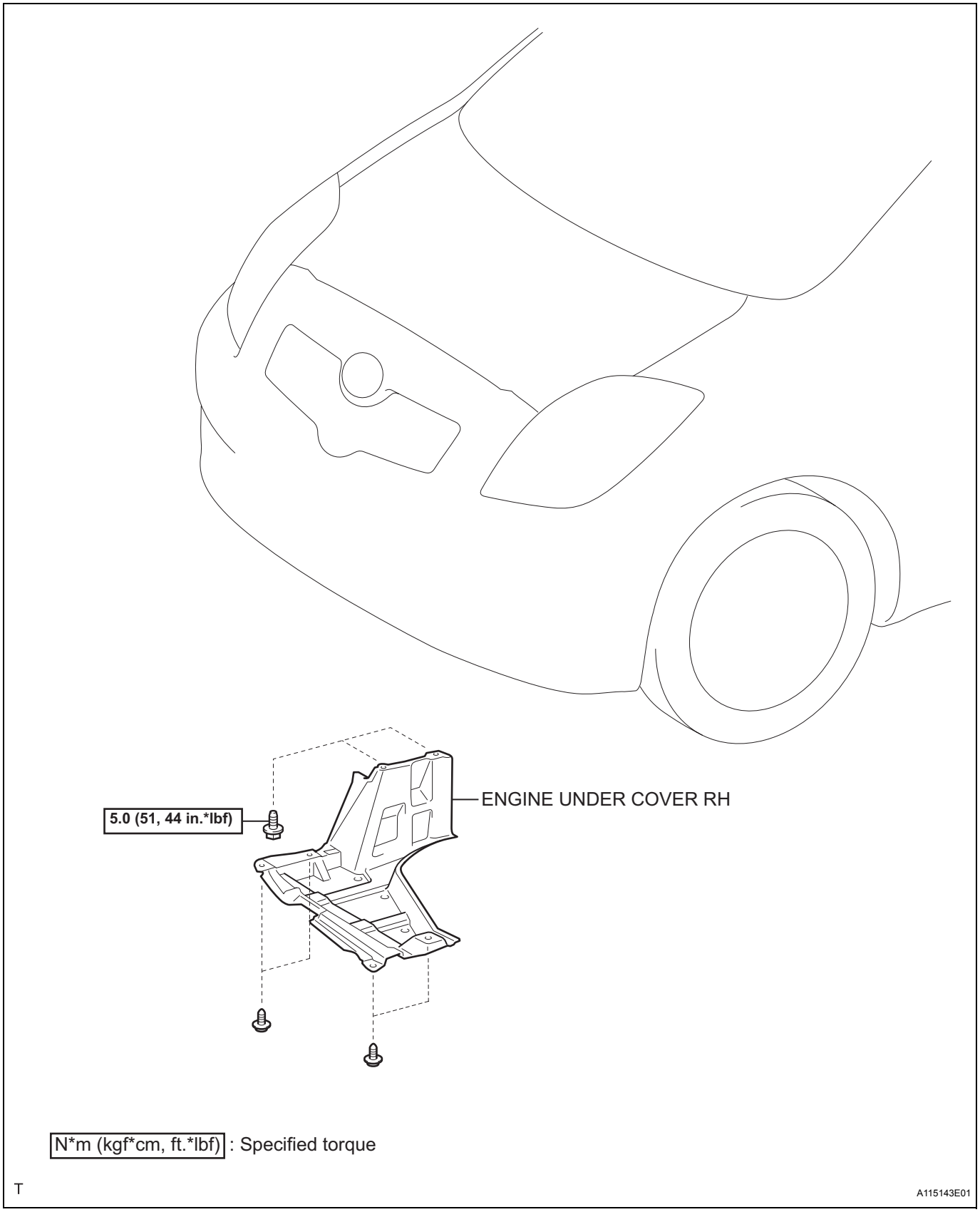

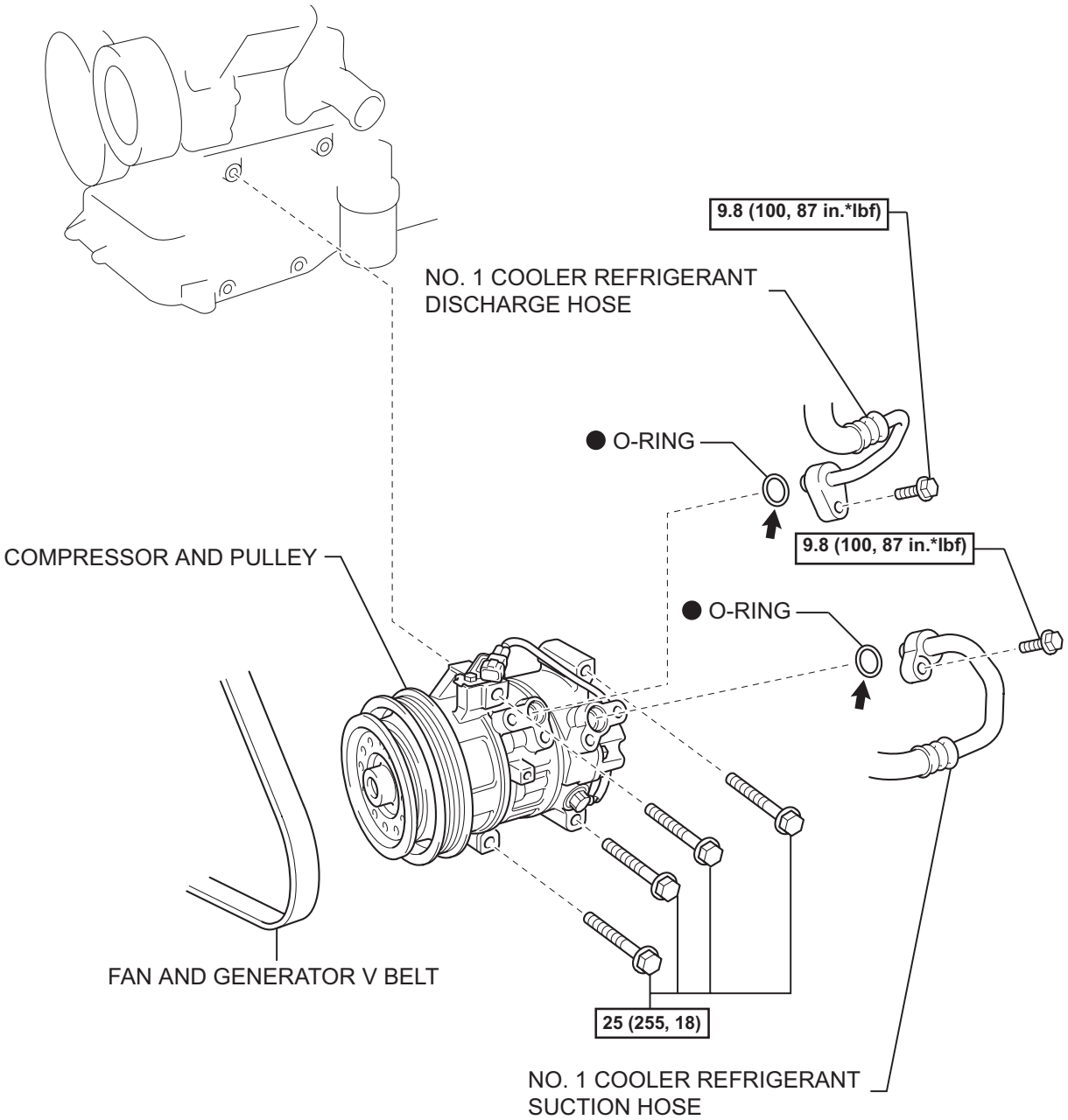

N*m (kgf*cm, ft*lbf) : Specified torque

⬅ Compressor Oil ND-8 or the equivalent ● Non-reusable part

AC

Y

I101614E01

ON-VEHICLE INSPECTION

1. INSPECT COMPRESSOR AND PULLEY

(a) Check the operation.

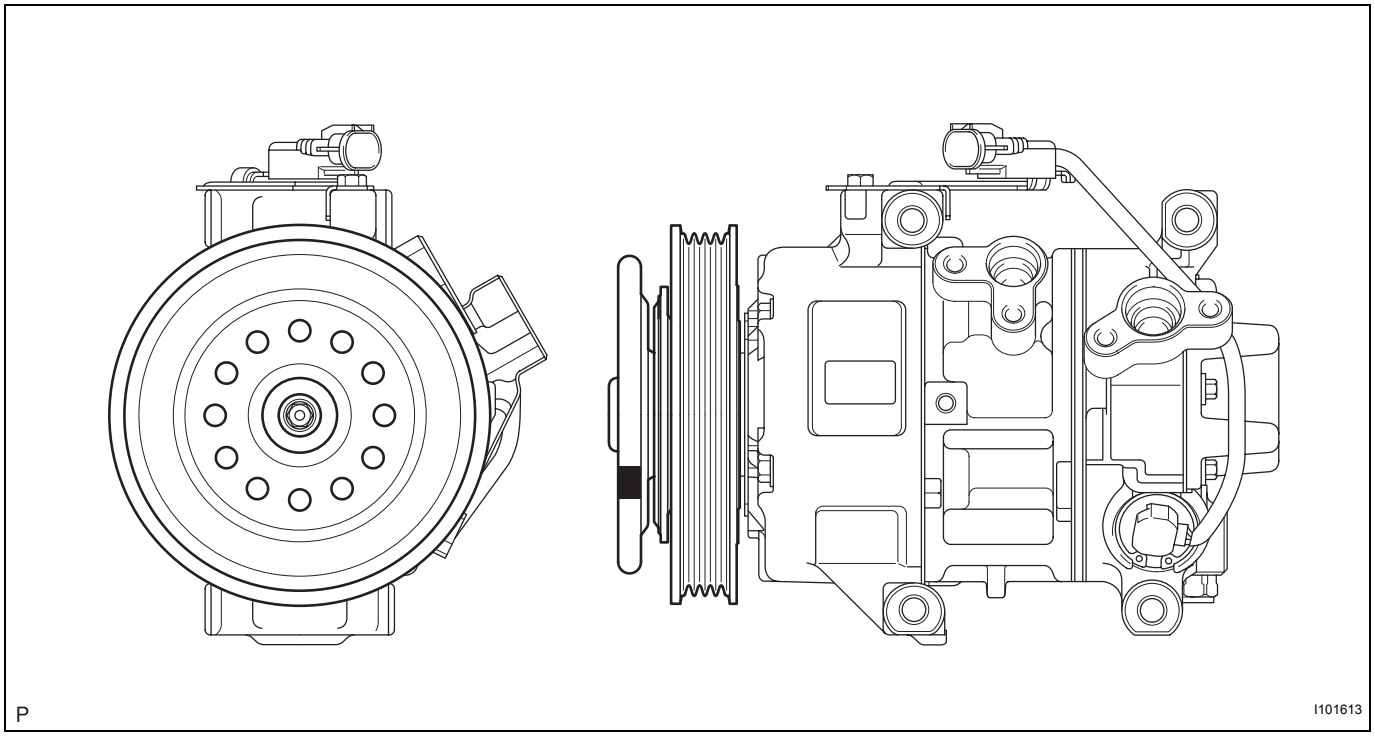

(1) Start the engine.

(2) Inspect the weight hub.

Standard:

The weight hub rotates along with the pulley.

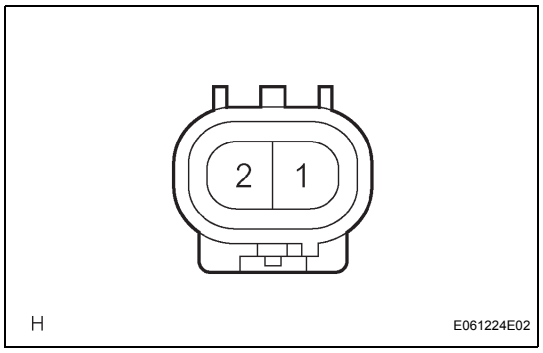

(b) Measure the resistance between terminals 1 and 2.

Standard resistance:

10.1 to 11.1 Ω at 25°C (77°F)

If the resistance is not as specified, replace the compressor and pulley.

REMOVAL

1. **DISCHARGE REFRIGERANT FROM REFRIGERATION SYSTEM (See page AC-66)**
2. **DISCONNECT CABLE FROM NEGATIVE BATTERY TERMINAL**
3. **REMOVE ENGINE UNDER COVER RH**
4. **REMOVE FAN AND GENERATOR V BELT (See page EM-7)**

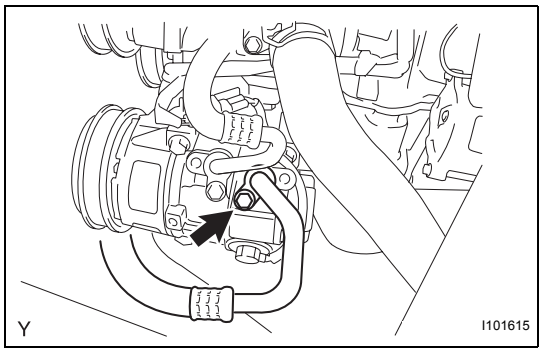

5. **DISCONNECT NO. 1 COOLER REFRIGERANT SUCTION HOSE**
   (a) Remove the bolt and disconnect the suction hose.
   (b) Remove the O-ring from the suction hose.
   NOTICE:
   Seal the openings of the disconnected parts using vinyl tape to prevent moisture and foreign matter from entering.

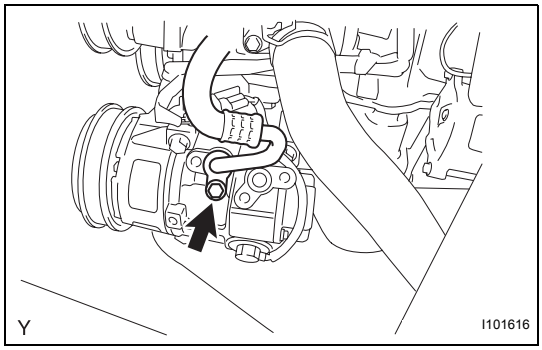

6. **DISCONNECT NO. 1 COOLER REFRIGERANT DISCHARGE HOSE**
   (a) Remove the bolt and disconnect the discharge hose.
   (b) Remove the O-ring from the discharge hose.
   NOTICE:
   Seal the openings of the disconnected parts using vinyl tape to prevent moisture and foreign matter from entering.

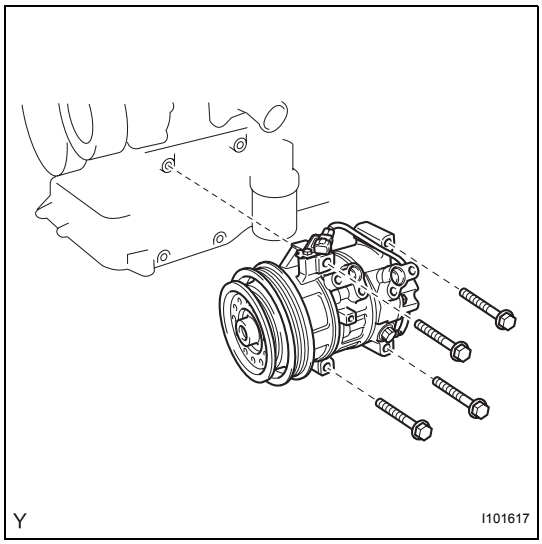

7. **REMOVE COMPRESSOR AND PULLEY**
   (a) Disconnect the connector.
   (b) Remove the 4 bolts and compressor.

INSTALLATION

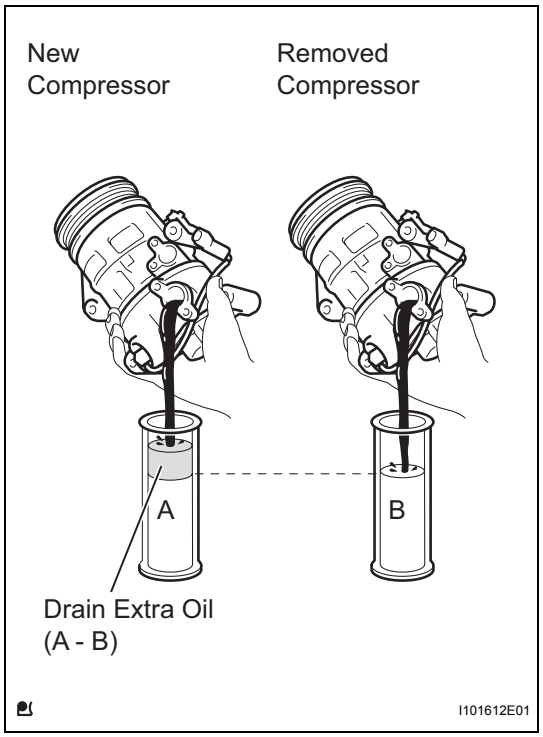

1. ADJUST COMPRESSOR OIL

(a) When replacing the compressor with a new one, gradually discharge the refrigerant gas from the service valve. Then drain the following amount of oil from the new compressor before installation, so that the amount of oil contained in it is the same as that in the compressor to be replaced.

HINT:

New compressors are filled with sufficient oil for the whole cycle. Therefore, it is necessary to drain residual oil from the condenser and cooling unit.

Standard:

(The amount of oil inside a new compressor: 90 (+15) cc (3.0 (+0.51) fl.oz.)) - (The amount of oil remaining in the removed compressor) = The amount of oil to be removed when replacing the compressor

NOTICE:

- **When checking the compressor oil level, observe the precautions for cooler removal/ installation.**
- **If a new compressor is installed without removing the amount of oil remaining in the pipes of the vehicle, the amount of oil becomes too large. This prevents heat exchange in the refrigerant cycle and causes refrigeration failure.**
- **If the amount of oil remaining in the removed compressor is too small, check for oil leakage.**
- **Use ND-OIL8 compressor oil.**

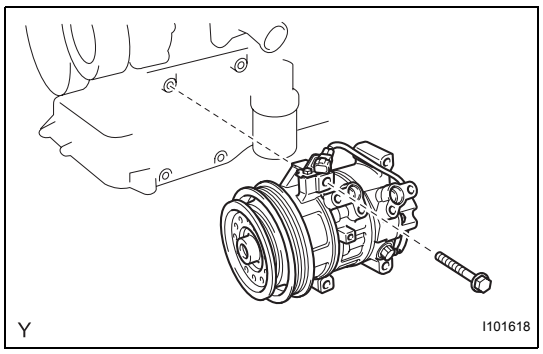

2. INSTALL COMPRESSOR AND PULLEY

(a) Provisionally tighten the compressor with the bolt.

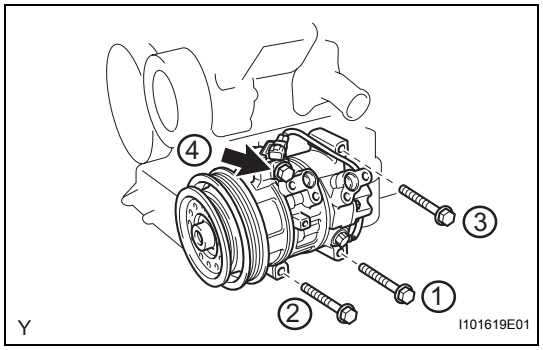

(b) Tighten the compressor with the 4 bolts.

Torque: 25 N*m (255 kgf*cm, 18 ft.*lbf)

NOTICE:

Tighten the bolts in the sequence shown in the illustration to install the compressor.

(c) Connect the connector.

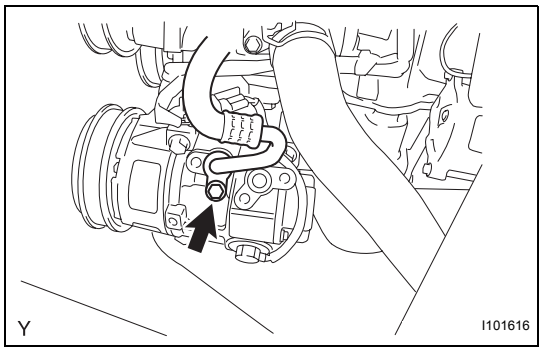

3. **INSTALL NO. 1 COOLER REFRIGERANT DISCHARGE HOSE**
   (a) Remove the attached vinyl tape from the hose.
   (b) Apply sufficient compressor oil (ND-OIL8) to a new O-ring and the fitting surface of the compressor.
   Compressor oil:
   ND-OIL8 or the equivalent
   (c) Install the O-ring onto the discharge hose.
   (d) Install the discharge hose onto the compressor with the bolt.
   Torque: 9.8 N*m (100 kgf*cm, 87 in.*lbf)

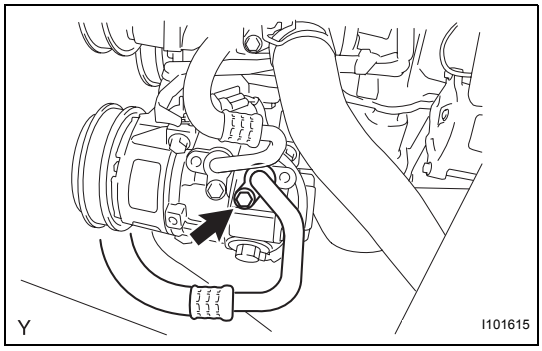

4. **INSTALL NO. 1 COOLER REFRIGERANT SUCTION HOSE**
   (a) Remove the attached vinyl tape from the hose.
   (b) Apply sufficient compressor oil (ND-OIL8) to a new O-ring and the fitting surface of the compressor.
   Compressor oil:
   ND-OIL8 or the equivalent
   (c) Install the O-ring onto the suction hose.
   (d) Install the suction hose onto the compressor with the bolt.
   Torque: 9.8 N*m (100 kgf*cm, 87 in.*lbf)

5. **INSTALL FAN AND GENERATOR V BELT (See page EM-7)**

6. **ADJUST FAN AND GENERATOR V BELT (See page EM-7)**

7. **INSPECT FAN AND GENERATOR V BELT (See page EM-8)**

8. **INSTALL ENGINE UNDER COVER RH**

9. **CONNECT CABLE TO NEGATIVE BATTERY TERMINAL**
   Torque: 5.4 N*m (55 kgf*cm, 48 in.*lbf)

10. **CHARGE REFRIGERANT (See page AC-67)**

11. **WARM UP ENGINE (See page AC-69)**

12. **CHECK FOR REFRIGERANT LEAK (See page AC-69)**

CONDENSER (for Sedan)

COMPONENTS

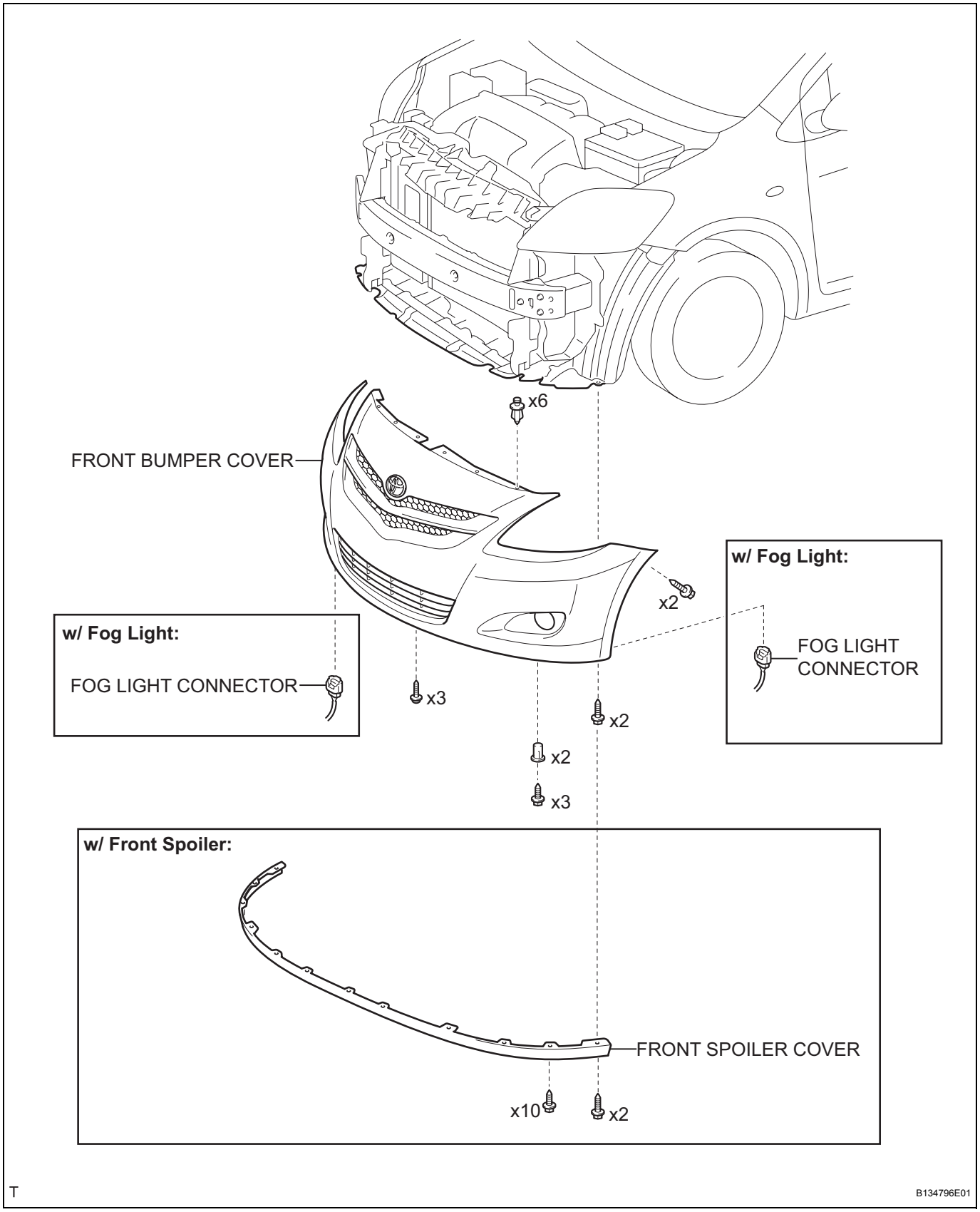

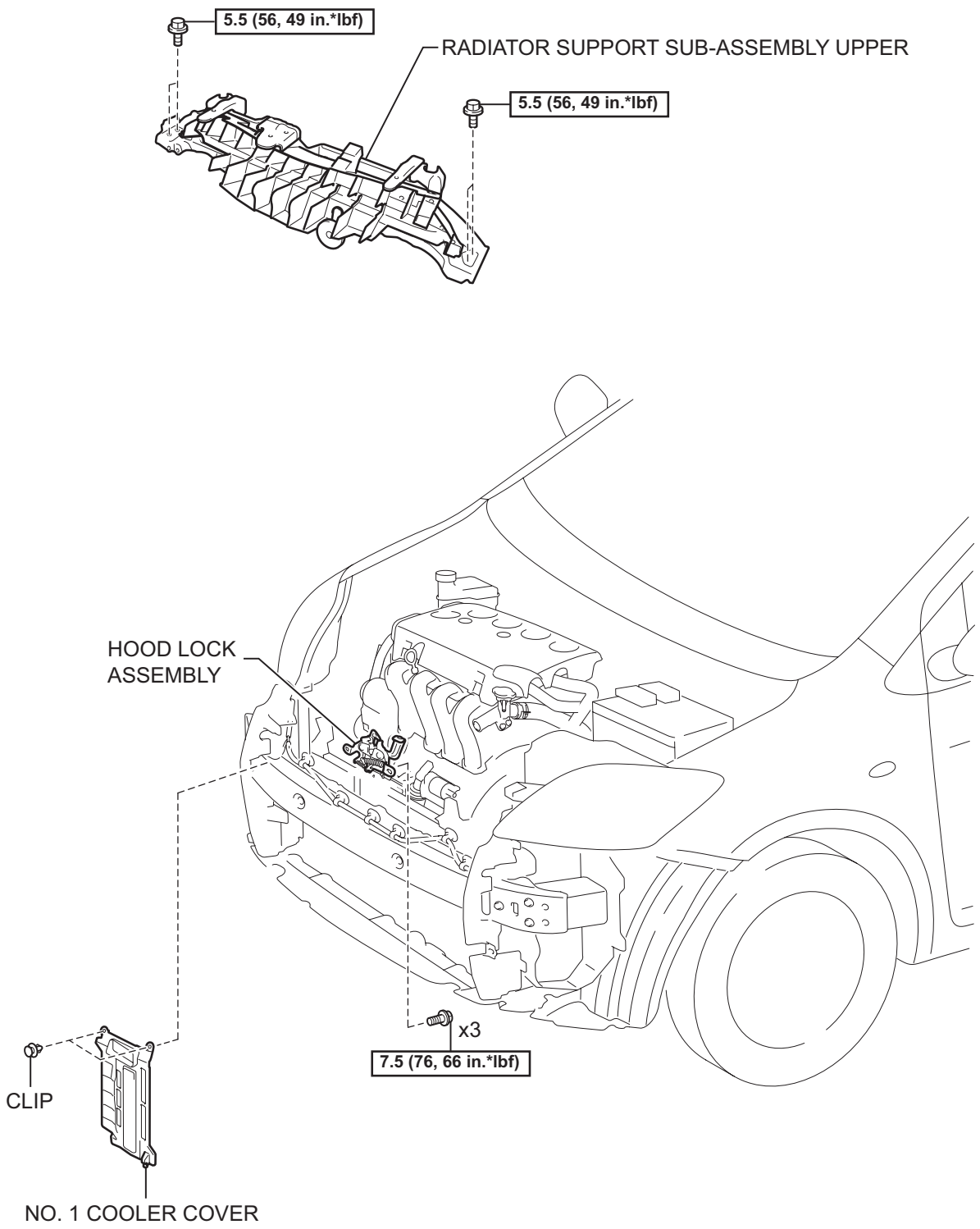

N*m (kgf*cm, ft.*lbf) : Specified torque

T

I102628E01

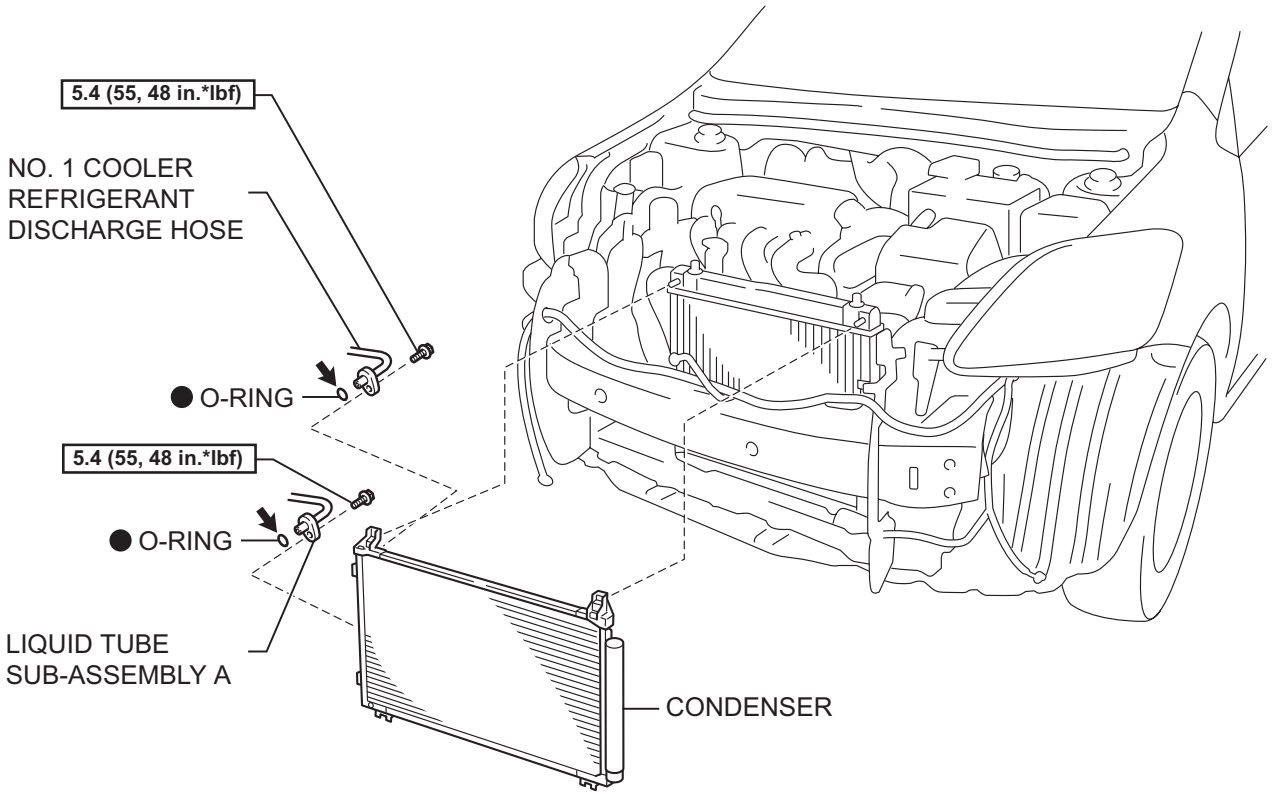

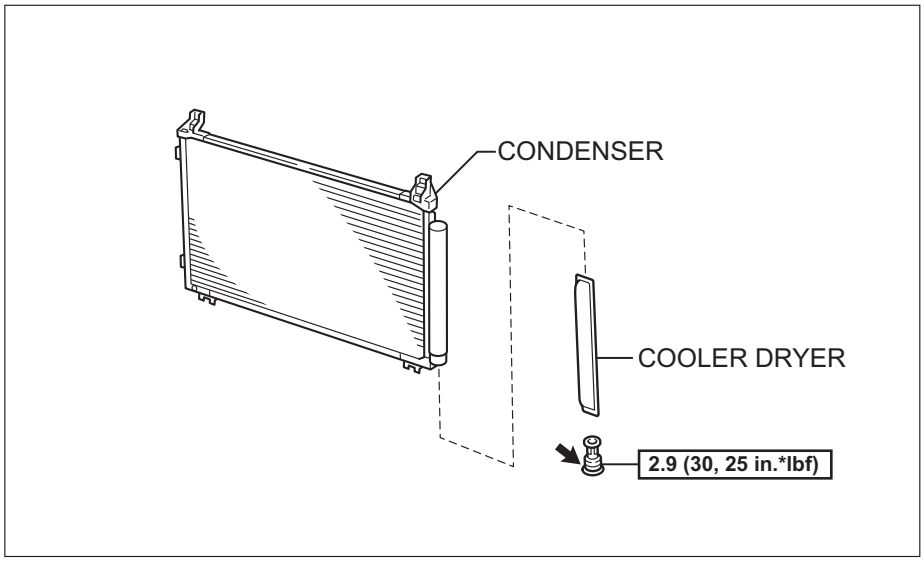

N*m (kgf*cm, ft*lbf) : Specified torque

⬅ Compressor Oil ND-8 or the equivalent ● Non-reusable part

N

I102574E02

ON-VEHICLE INSPECTION

1. INSPECT CONDENSER ASSEMBLY

(a) If the fins of the cooler condenser assembly are dirty, clean them with water and dry them with compressed air.

NOTICE:

Do not damage the fins of the condenser assembly.

(b) If the fins of the cooler condenser assembly are bent, straighten them using a screwdriver or pliers.

2. CHECK CONDENSER FOR REFRIGERANT LEAKAGE

(a) Check the pipe joints for gas leakage, using a halogen leak detector.

(b) Check the tightening torque of the joints if gas leakage is detected from any pipe joints.

REMOVAL

1. **DISCHARGE REFRIGERANT FROM REFRIGERATION SYSTEM (See page AC-66)**
2. **DISCONNECT CABLE FROM NEGATIVE BATTERY TERMINAL**
3. **REMOVE FRONT SPOILER COVER (See page ET-6)**
4. **REMOVE FRONT BUMPER COVER (See page ET-6)**
5. **REMOVE NO. 1 COOLER COVER (See page CO-31)**
6. **SEPARATE HOOD LOCK ASSEMBLY (w/ Theft Deterrent System) (See page CO-32)**
7. **SEPARATE HOOD LOCK ASSEMBLY (w/o Theft Deterrent System) (See page CO-32)**
8. **REMOVE RADIATOR SUPPORT SUB-ASSEMBLY UPPER (See page CO-33)**
9. **DISCONNECT NO. 1 COOLER REFRIGERANT DISCHARGE HOSE**
   (a) Remove the bolt and disconnect the discharge hose from the cooler condenser.
   (b) Remove the O-ring from the discharge hose.
   NOTICE:
   Seal the openings of the disconnected parts using vinyl tape to prevent moisture and foreign matter from entering.

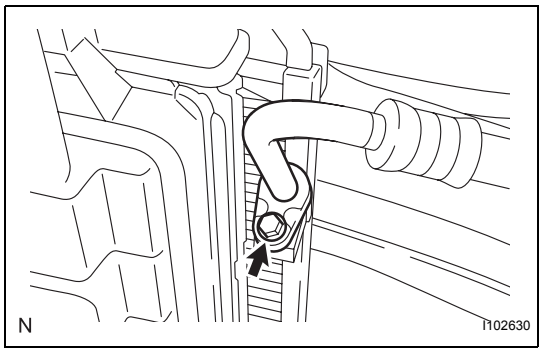

10. **DISCONNECT LIQUID TUBE SUB-ASSEMBLY A**
    (a) Remove the bolt and disconnect the liquid tube from the cooler condenser.
    (b) Remove the O-ring from the liquid tube.
    NOTICE:
    Seal the openings of the disconnected parts using vinyl tape to prevent moisture and foreign matter from entering.

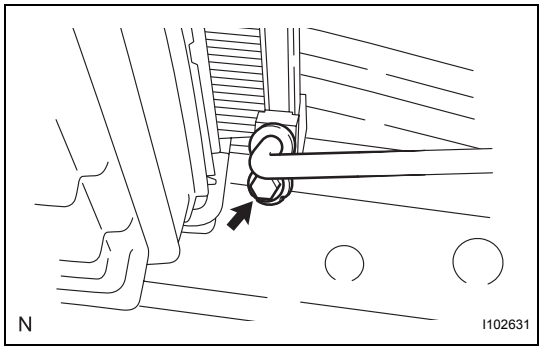

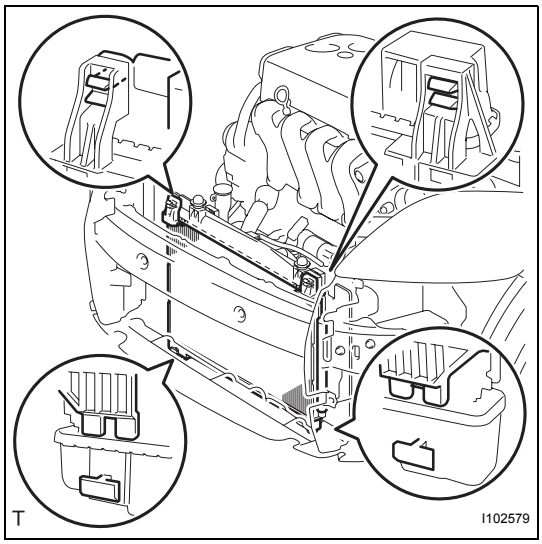

11. REMOVE CONDENSER

(a) Disengage the 2 claws and remove the condenser from the vehicle.

NOTICE:
Do not damage the condenser or radiator when removing the condenser.

DISASSEMBLY

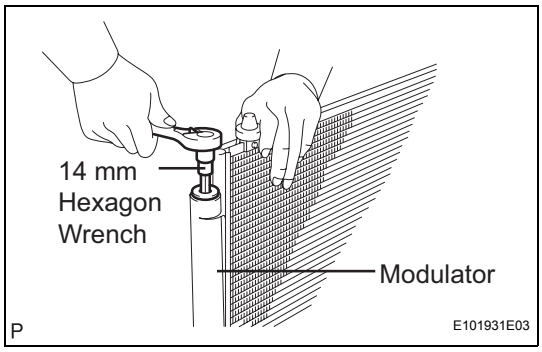

1. REMOVE COOLER DRYER

(a) Using a 14 mm straight hexagon wrench, remove the cap from the modulator.

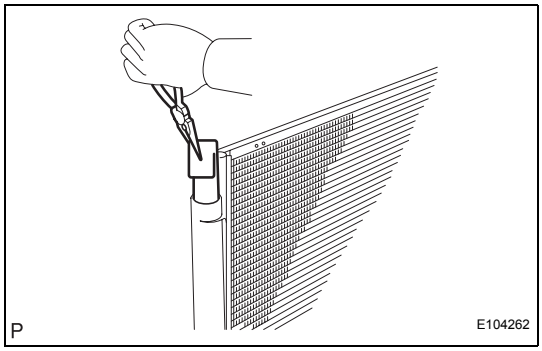

(b) Using pliers, remove the cooler dryer.

REASSEMBLY

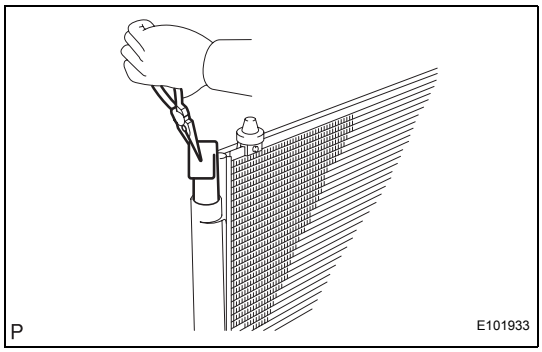

1. INSTALL COOLER DRYER

(a) Using pliers, install the cooler dryer into the modulator.

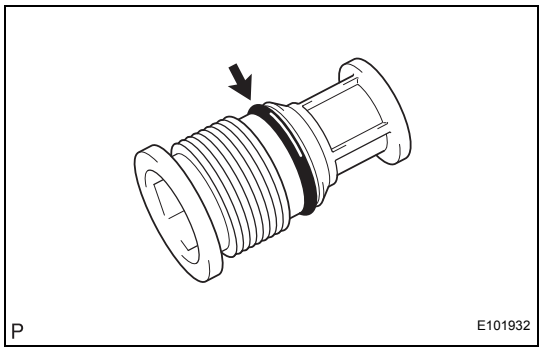

(b) Apply sufficient compressor oil to a new O-ring and the fitting surface of the cap.
Compressor oil:
ND-OIL 8 or the equivalent

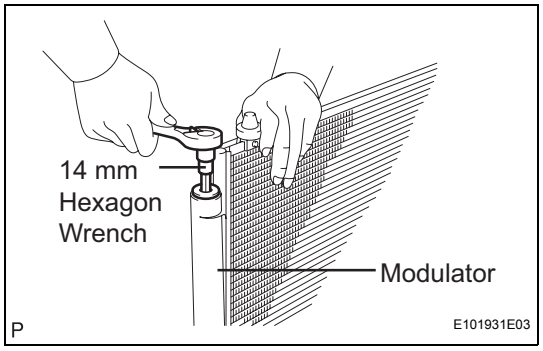

(c) Using a 14 mm straight hexagon wrench, install the cap onto the modulator.
Torque: 2.9 N*m (30 kgf*cm, 25 in.*lbf)

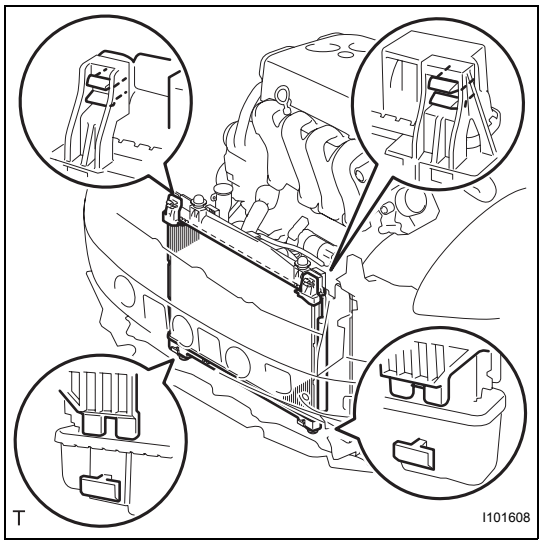

INSTALLATION

1. INSTALL CONDENSER

(a) Engage the 2 claws and install the condenser into the vehicle.
NOTICE:
Do not damage the condenser or radiator when installing the condenser.
HINT:
If a new condenser is installed, add compressor oil to the condenser as follows.
Compressor oil:
ND-OIL8 or the equivalent. Add 40 cc (1.35 fl. oz.)

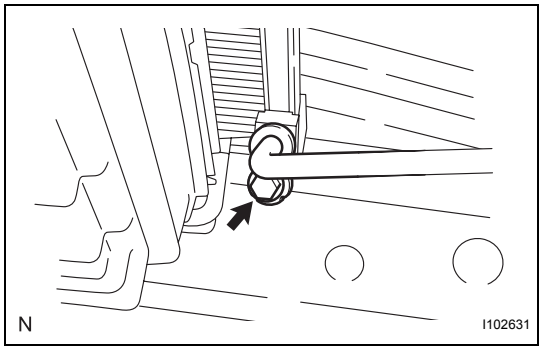

2. INSTALL LIQUID TUBE SUB-ASSEMBLY A

(a) Remove the attached vinyl tape from the pipe and the connecting part of the cooler condenser.
(b) Apply sufficient compressor oil to a new O-ring and the fitting surface of the pipe joint.
Compressor oil:
ND-OIL8 or the equivalent
(c) Install the O-ring onto the liquid tube.
(d) Install the liquid tube onto the cooler condenser with the bolt.
Torque: 5.4 N*m (55 kgf*cm, 48 in.*lbf)

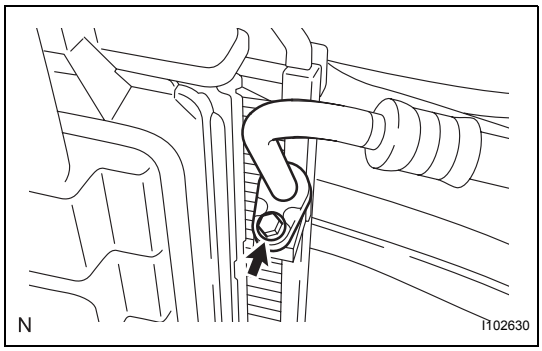

3. **INSTALL NO. 1 COOLER REFRIGERANT DISCHARGE HOSE**
   (a) Remove the attached vinyl tape from the hose and the connecting part of the cooler condenser.
   (b) Apply sufficient compressor oil to a new O-ring and the fitting surface of the hose joint.
   Compressor oil:
   ND-OIL8 or the equivalent
   (c) Install the O-ring onto the discharge hose.
   (d) Install the discharge hose onto the cooler condenser with the bolt.
   Torque: 5.4 N*m (55 kgf*cm, 48 in.*lbf)
4. **INSTALL RADIATOR SUPPORT SUB-ASSEMBLY UPPER (See page CO-40)**
5. **INSTALL HOOD LOCK ASSEMBLY (w/ Theft Deterrent System) (See page CO-40)**
6. **INSTALL HOOD LOCK ASSEMBLY (w/o Theft Deterrent System) (See page CO-41)**
7. **INSTALL NO. 1 COOLER COVER (See page CO-41)**
8. **INSTALL FRONT BUMPER COVER (See page ET-16)**
9. **INSTALL FRONT SPOILER COVER (See page ET-19)**
10. **ADJUST HOOD LOCK ASSEMBLY (See page CO-42)**
11. **CONNECT CABLE TO NEGATIVE BATTERY TERMINAL**
    Torque: 5.4 N*m (55 kgf*cm, 48 in.*lbf)
12. **CHARGE REFRIGERANT (See page AC-67)**
13. **WARM UP ENGINE (See page AC-69)**
14. **CHECK FOR REFRIGERANT LEAK (See page AC-69)**

CONDENSER (for Hatchback)

COMPONENTS

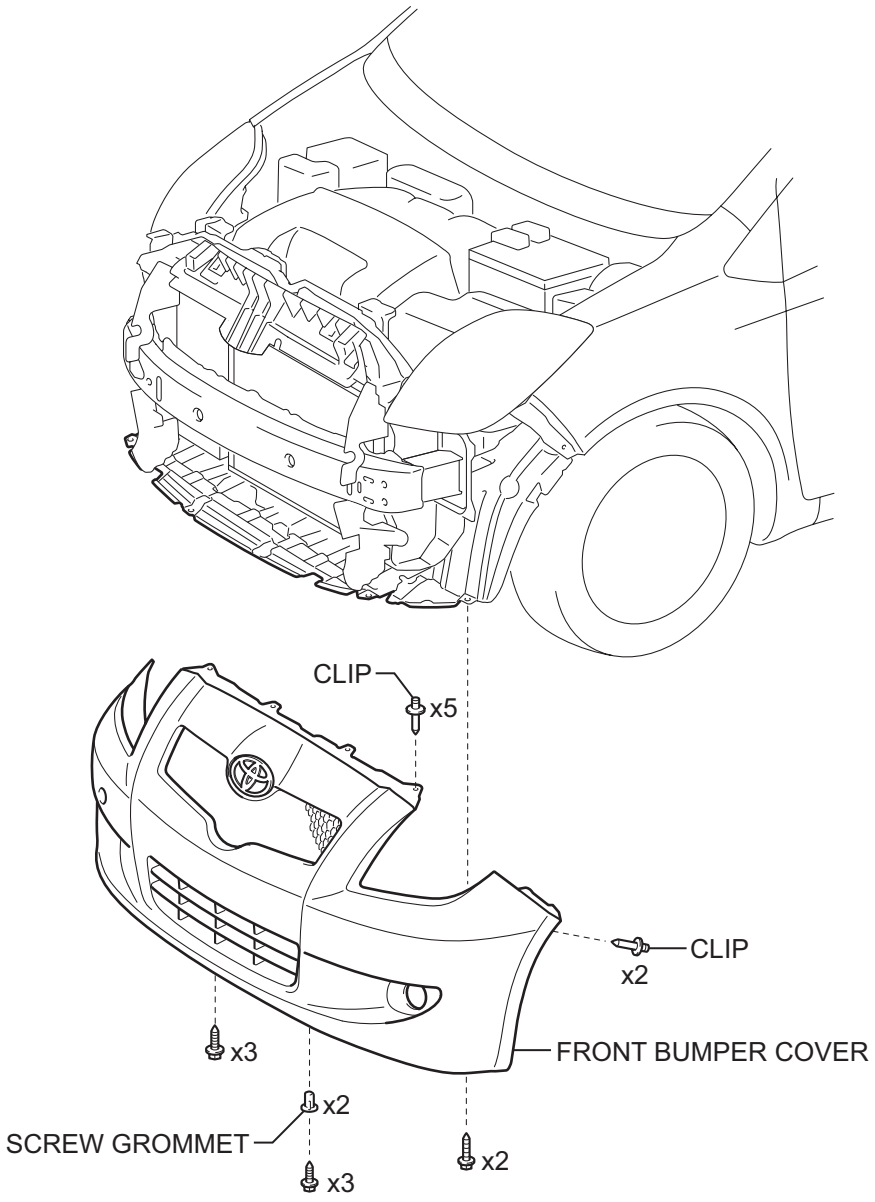

T

E117642E02

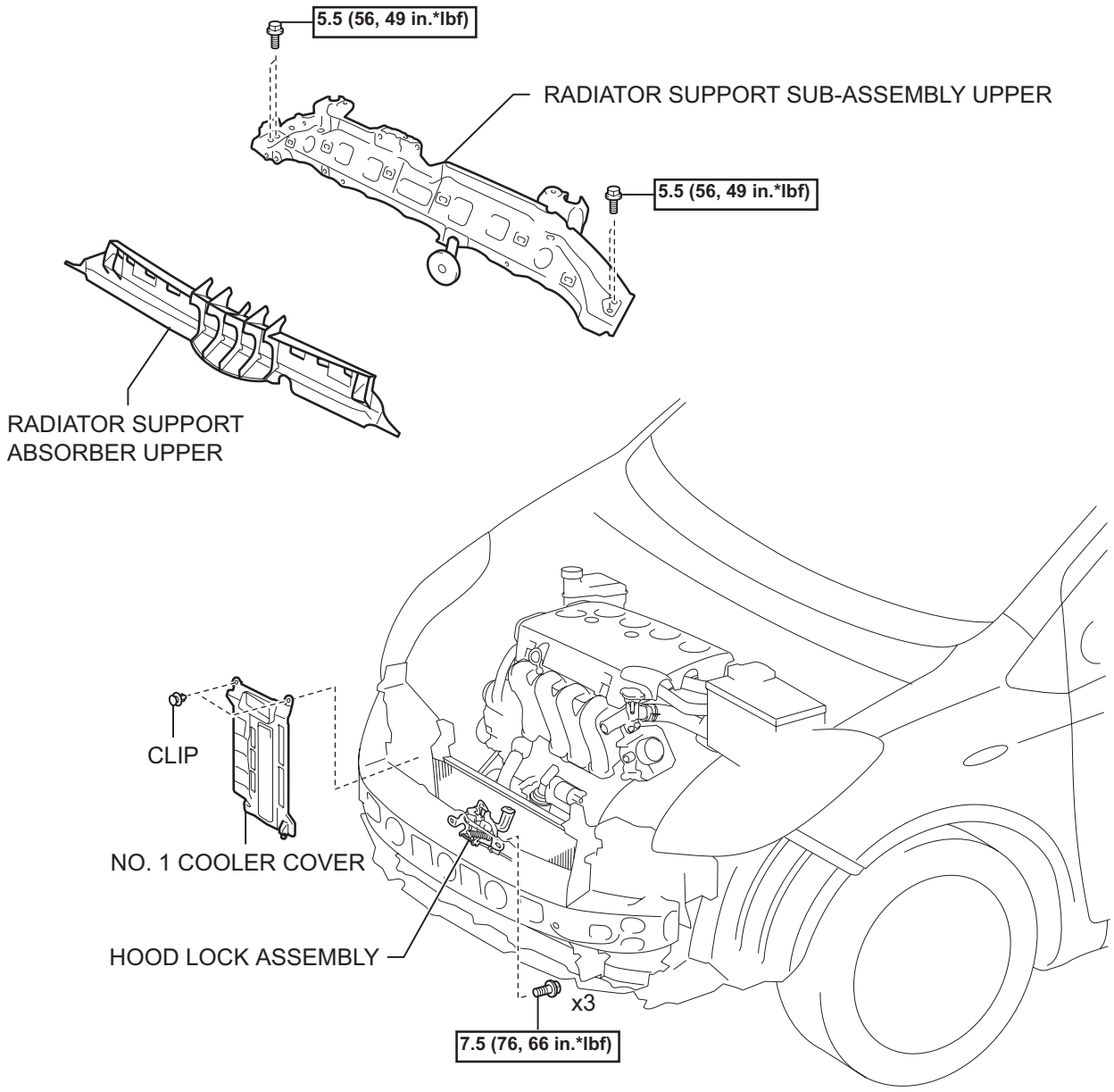

N*m (kgf*cm, ft.*lbf) : Specified torque

T

I101547E01

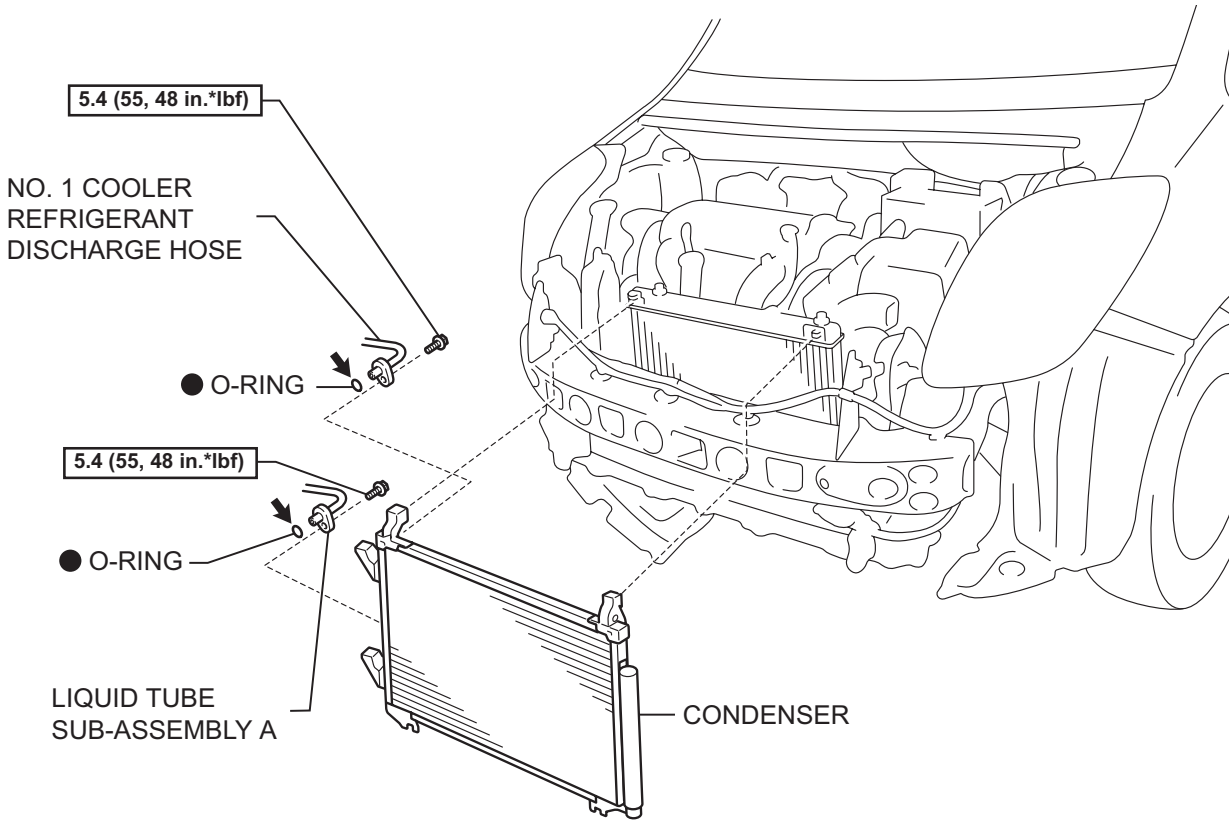

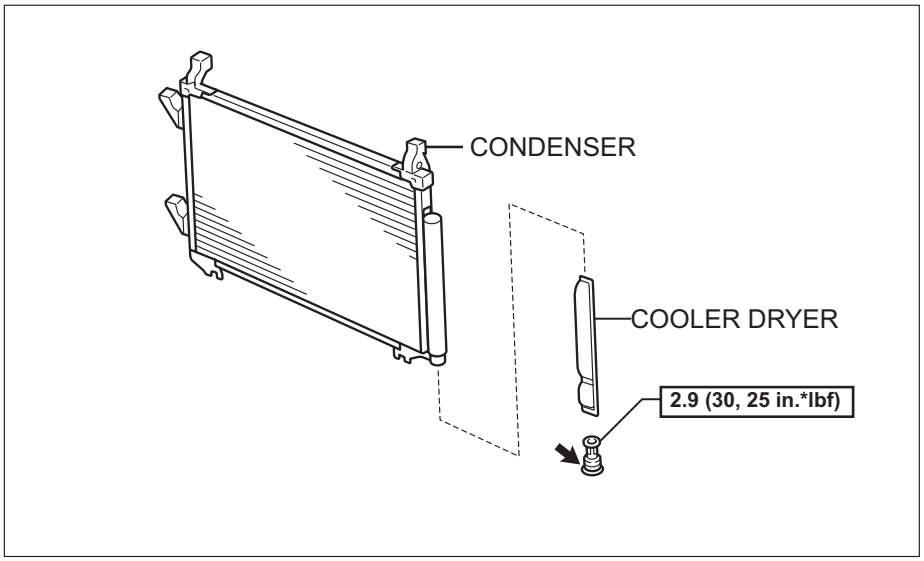

N*m (kgf*cm, ft.*lbf) : Specified torque

⬅ Compressor Oil ND-OIL8 equivalent ● Non-reusable part

AC

N

I101606E03

ON-VEHICLE INSPECTION

1. INSPECT CONDENSER ASSEMBLY

(a) If the fins of the cooler condenser assembly are dirty, clean them with water and dry them with compressed air.

NOTICE:

Do not damage the fins of the condenser assembly.

(b) If the fins of the cooler condenser assembly are bent, straighten them using a screwdriver or pliers.

2. CHECK CONDENSER FOR REFRIGERANT LEAKAGE

(a) Check the pipe joints for gas leakage, using a halogen leak detector.

(b) Check the tightening torque of the joints if gas leakage is detected from any pipe joints.

REMOVAL

1. **DISCHARGE REFRIGERANT FROM REFRIGERATION SYSTEM (See page AC-66)**
2. **DISCONNECT CABLE FROM NEGATIVE BATTERY TERMINAL**
3. **REMOVE FRONT BUMPER COVER (See page ET-24)**
4. **REMOVE RADIATOR SUPPORT ABSORBER UPPER (See page CO-31)**
5. **REMOVE NO. 1 COOLER COVER (See page CO-31)**
6. **SEPARATE HOOD LOCK ASSEMBLY (w/ Theft Deterrent System) (See page CO-32)**
7. **SEPARATE HOOD LOCK ASSEMBLY (w/o Theft Deterrent System) (See page CO-32)**
8. **REMOVE RADIATOR SUPPORT SUB-ASSEMBLY UPPER (See page CO-33)**
9. **DISCONNECT NO. 1 COOLER REFRIGERANT DISCHARGE HOSE**
   (a) Remove the bolt and disconnect the discharge hose from the cooler condenser.
   (b) Remove the O-ring from the discharge hose.
   NOTICE:
   Seal the openings of the disconnected parts using vinyl tape to prevent moisture and foreign matter from entering.

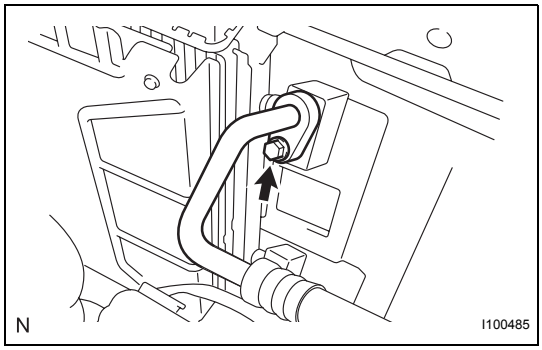

10. **DISCONNECT LIQUID TUBE SUB-ASSEMBLY A**
    (a) Remove the bolt and disconnect the liquid tube from the cooler condenser.
    (b) Remove the O-ring from the liquid tube.
    NOTICE:
    Seal the openings of the disconnected parts using vinyl tape to prevent moisture and foreign matter from entering.

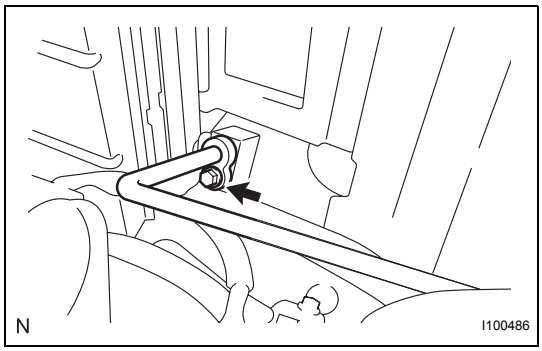

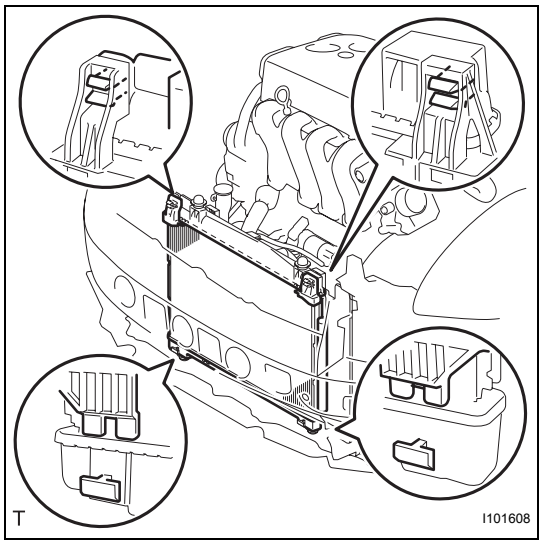

11. REMOVE CONDENSER

(a) Disengage the 2 claws and remove the condenser from the vehicle.

NOTICE:

Do not damage the condenser or radiator when removing the condenser.

DISASSEMBLY

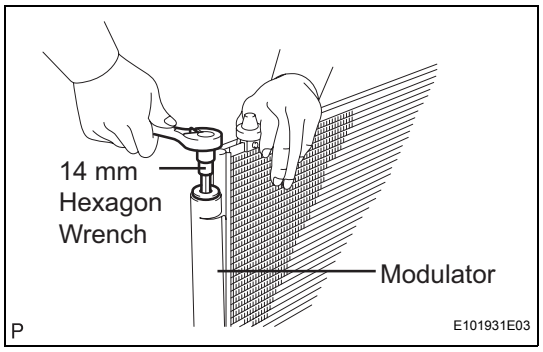

1. REMOVE COOLER DRYER

(a) Using a 14 mm straight hexagon wrench, remove the cap from the modulator.

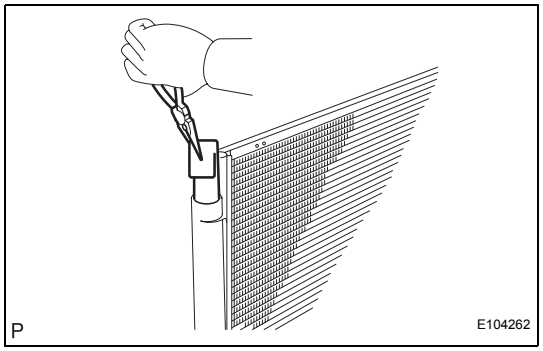

(b) Using pliers, remove the cooler dryer.

REASSEMBLY

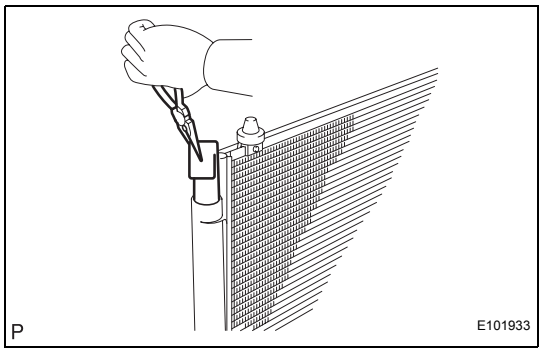

1. INSTALL COOLER DRYER

(a) Using pliers, install the cooler dryer onto the modulator.

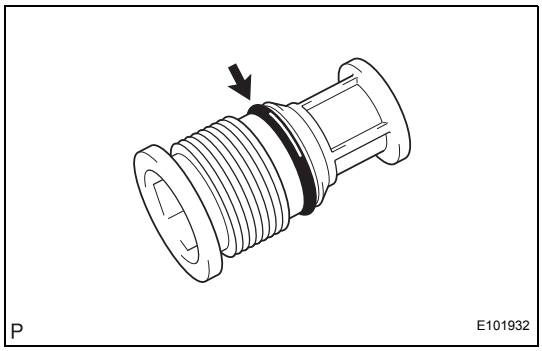

(b) Apply sufficient compressor oil to a new O-ring and the fitting surface of the cap.
Compressor oil:
ND-OIL 8 or the equivalent

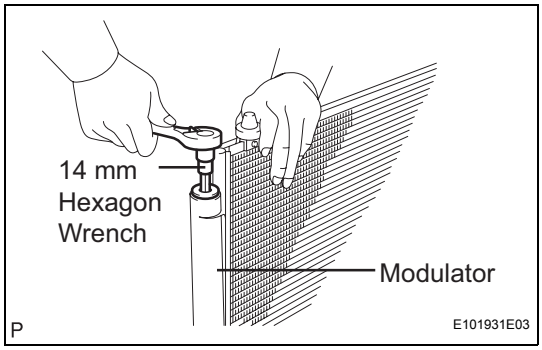

(c) Using a 14 mm straight hexagon wrench, install the cap onto the cooler condenser core.
Torque: 2.9 N*m (30 kgf*cm, 25 in.*lbf)

INSTALLATION

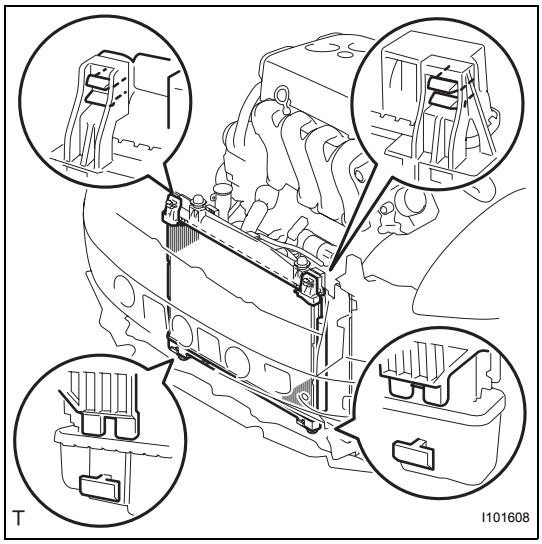

1. INSTALL CONDENSER

(a) Engage the 2 claws and install the condenser into the vehicle.
NOTICE:
Do not damage the condenser or radiator when installing the condenser.
HINT:
If a new condenser is installed, add compressor oil to the condenser as follows.
Compressor oil:
ND-OIL8 or the equivalent. Add 40 cc (1.35 fl. oz.)

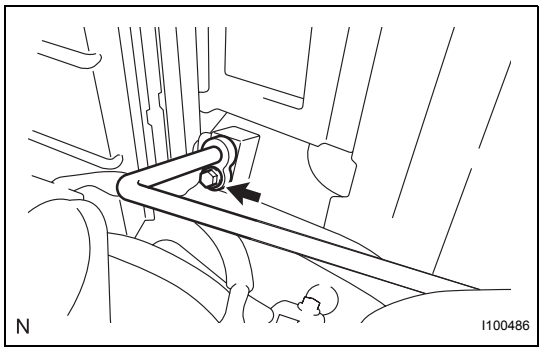

2. INSTALL LIQUID TUBE SUB-ASSEMBLY A

(a) Remove the attached vinyl tape from the pipe and the connecting part of the cooler condenser.
(b) Apply sufficient compressor oil to a new O-ring and the fitting surface of the pipe joint.
Compressor oil:
ND-OIL8 or the equivalent
(c) Install the O-ring onto the liquid tube.
(d) Install the tube onto the condenser with the bolt.
Torque: 5.4 N*m (55 kgf*cm, 48 in.*lbf)

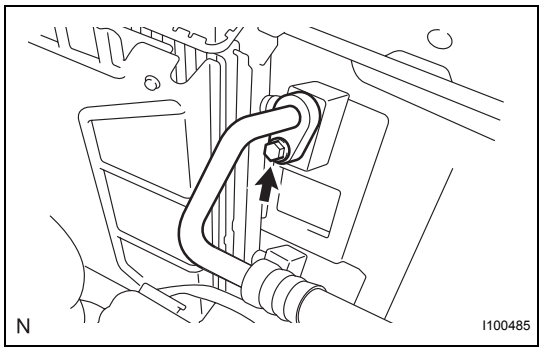

3. **INSTALL NO. 1 COOLER REFRIGERANT DISCHARGE HOSE**
   (a) Remove the attached vinyl tape from the hose and the connecting part of the cooler condenser.
   (b) Apply sufficient compressor oil to a new O-ring and the fitting surface of the hose joint.
   Compressor oil:
   ND-OIL8 or the equivalent
   (c) Install the O-ring onto the discharge hose.
   (d) Install the discharge hose onto the condenser with the bolt.
   Torque: 5.4 N*m (55 kgf*cm, 48 in.*lbf)
4. **INSTALL RADIATOR SUPPORT SUB-ASSEMBLY UPPER (See page CO-40)**
5. **INSTALL HOOD LOCK ASSEMBLY (w/ Theft Deterrent System) (See page CO-40)**
6. **INSTALL HOOD LOCK ASSEMBLY (w/o Theft Deterrent System) (See page CO-41)**
7. **INSTALL NO. 1 COOLER COVER (See page CO-41)**
8. **INSTALL RADIATOR SUPPORT ABSORBER UPPER (See page CO-42)**
9. **INSTALL FRONT BUMPER COVER (See page ET-33)**
10. **ADJUST HOOD LOCK ASSEMBLY (See page CO-42)**
11. **CONNECT CABLE TO NEGATIVE BATTERY TERMINAL**
    Torque: 5.4 N*m (55 kgf*cm, 48 in.*lbf)
12. **CHARGE REFRIGERANT (See page AC-67)**
13. **WARM UP ENGINE (See page AC-69)**
14. **CHECK FOR REFRIGERANT LEAK (See page AC-69)**

AMBIENT TEMPERATURE SENSOR

COMPONENTS

for Hatchback:

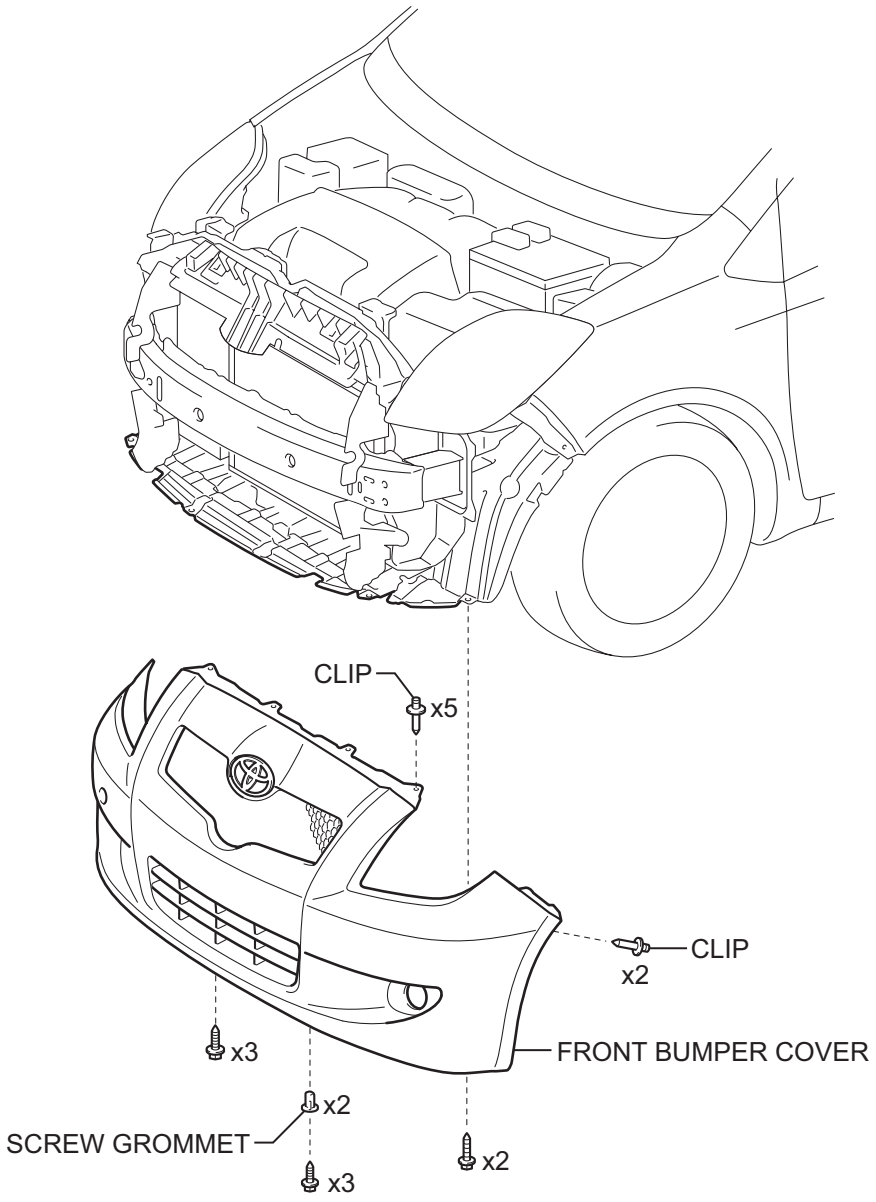

T

E117642E03

AC

for Sedan:

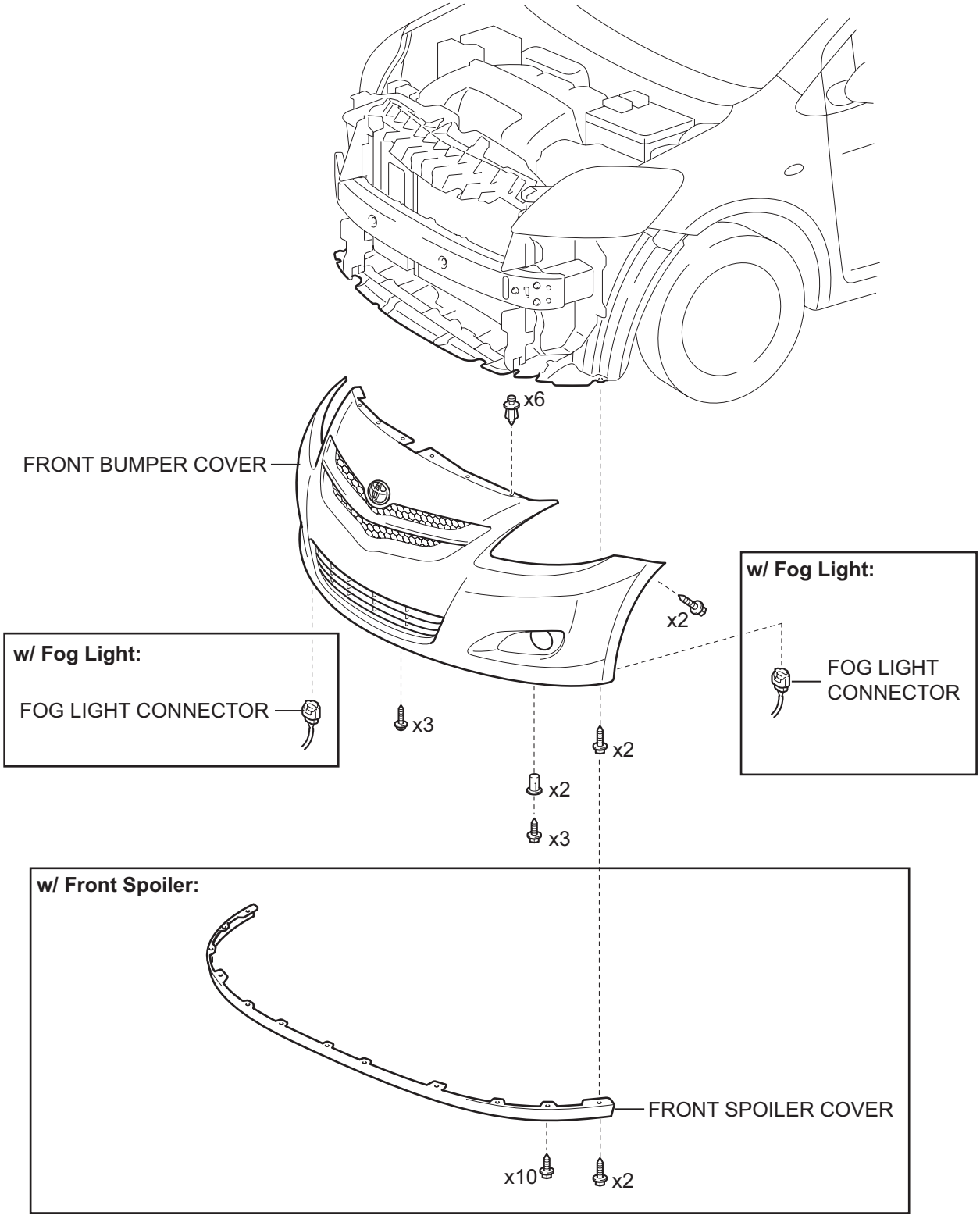

B134796E07

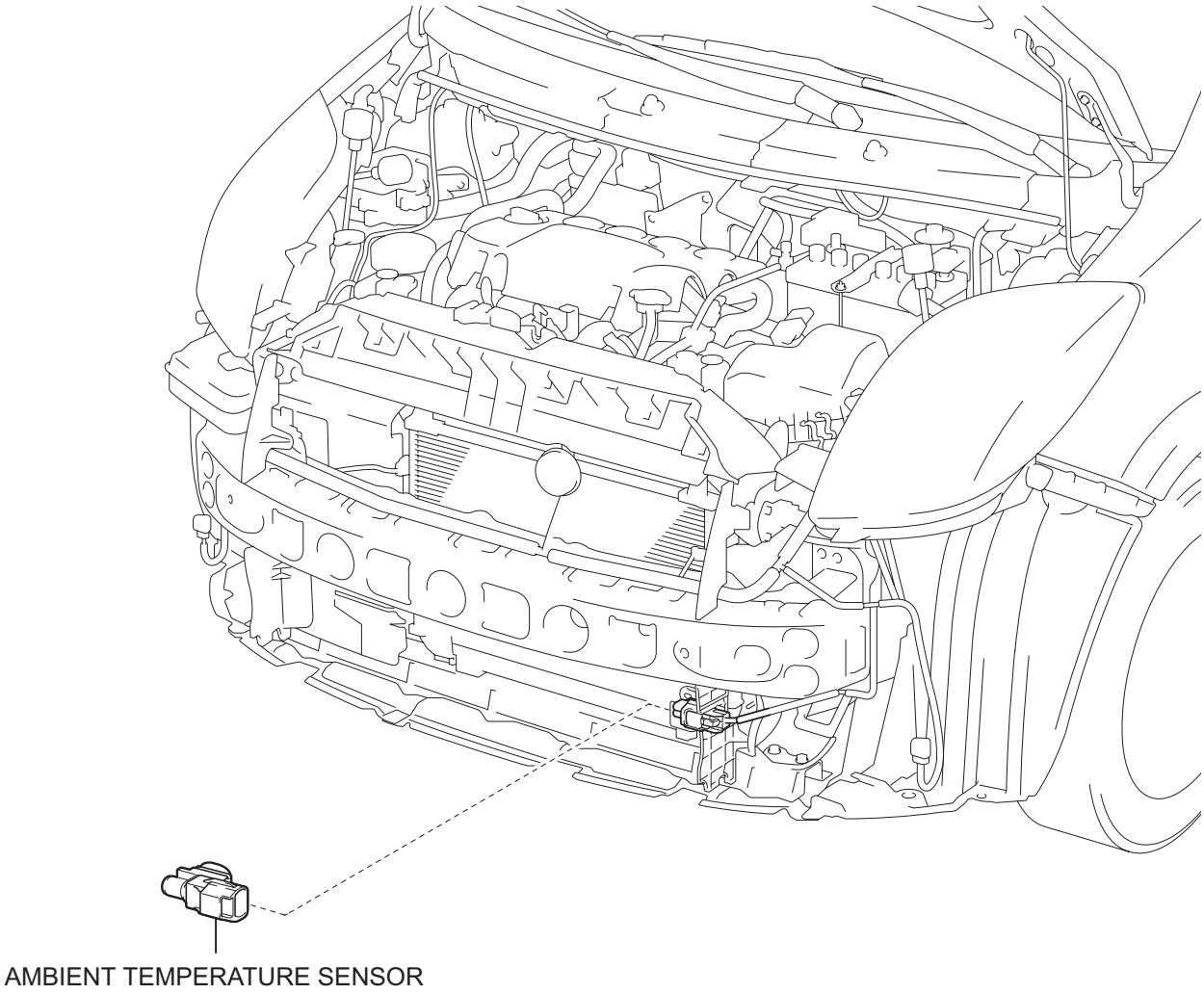

P

I101609E01

REMOVAL

1. **DISCONNECT CABLE FROM NEGATIVE BATTERY TERMINAL**
2. **REMOVE FRONT BUMPER COVER (for Hatchback) (See page ET-24)**
3. **REMOVE FRONT SPOILER COVER (for Sedan) (See page ET-6)**
4. **REMOVE FRONT BUMPER COVER (for Sedan) (See page ET-6)**
5. **REMOVE AMBIENT TEMPERATURE SENSOR**
   (a) Disconnect the connector.
   (b) Disengage the clamp and remove the ambient temperature sensor.

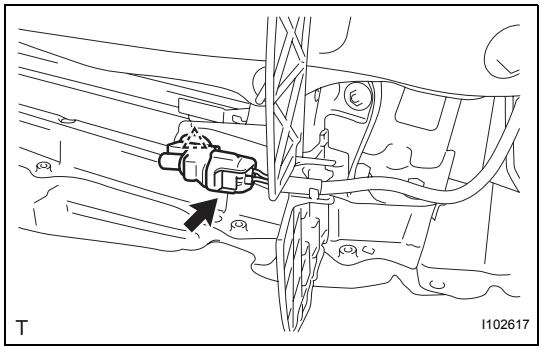

INSPECTION

1. **INSPECT AMBIENT TEMPERATURE SENSOR**
   (a) Measure the resistance.
   Standard resistance

Tester Connection	Condition	Specified Condition
1 - 2	10°C (50°F)	3.00 to 3.73 kΩ
1 - 2	15°C (59°F)	2.45 to 2.88 kΩ
1 - 2	20°C (68°F)	1.95 to 2.30 kΩ
1 - 2	25°C (77°F)	1.60 to 1.80 kΩ
1 - 2	30°C (86°F)	1.28 to 1.47 kΩ
1 - 2	35°C (95°F)	1.00 to 1.22 kΩ
1 - 2	40°C (104°F)	0.80 to 1.00 kΩ
1 - 2	45°C (113°F)	0.65 to 0.85 kΩ
1 - 2	50°C (122°F)	0.50 to 0.70 kΩ
1 - 2	55°C (131°F)	0.44 to 0.60 kΩ
1 - 2	60°C (140°F)	0.36 to 0.50 kΩ

NOTICE:
- **Touching the sensor even slightly may change the resistance value. Hold the connector of the sensor.**
- **When measuring the resistance, the sensor temperature must be the same as the ambient temperature.**

HINT:
As the temperature increases, the resistance decreases (see the graph).
If the result is not as specified, replace the ambient temperature sensor.

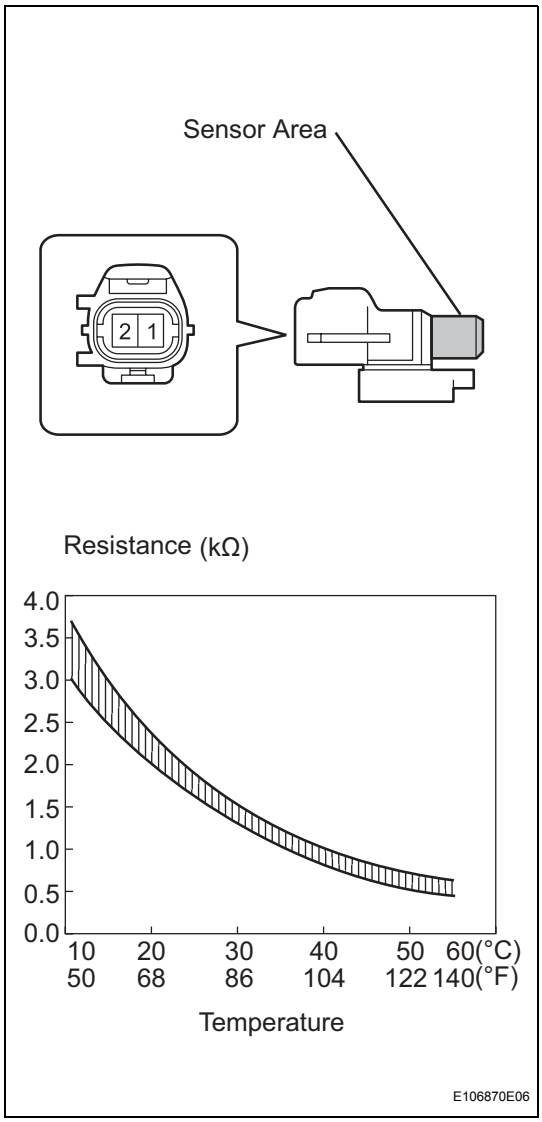

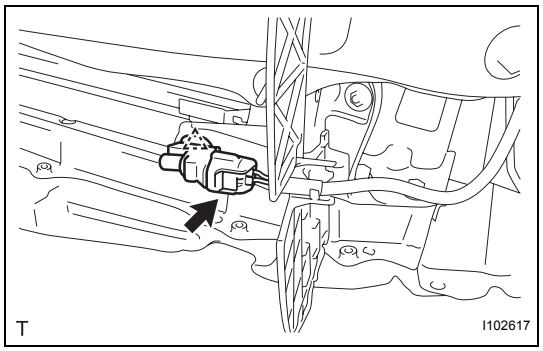

INSTALLATION

1. **INSTALL AMBIENT TEMPERATURE SENSOR**
   (a) Engage the clamp and install the ambient temperature sensor.
   (b) Connect the connector.
2. **INSTALL FRONT BUMPER COVER (for Hatchback) (See page ET-33)**
3. **INSTALL FRONT BUMPER COVER (for Sedan) (See page ET-16)**
4. **INSTALL FRONT SPOILER COVER (for Sedan) (See page ET-19)**
5. **CONNECT CABLE TO NEGATIVE BATTERY TERMINAL**
   Torque: 5.4 N*m (55 kgf*cm, 48 in.*lbf)

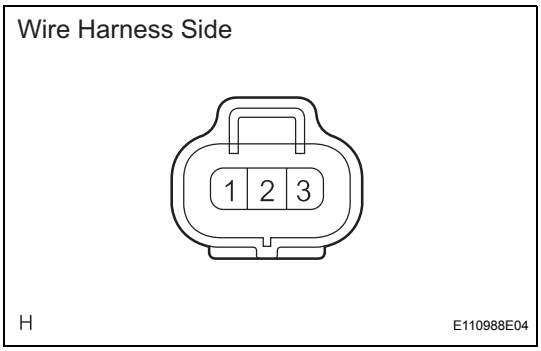

AIR CONDITIONING PRESSURE SENSOR

ON-VEHICLE INSPECTION

1. INSPECT PRESSURE SENSOR

(a) Check the wire harness.

(1) Disconnect the connector of the pressure sensor.

(2) Using an ohmmeter, measure the resistance of the wire harness side connector.

Standard resistance

Tester Connection	Specified Condition
1 - Body ground	Below 1 Ω

(3) Turn the ignition switch ON.

(4) Measure the voltage of the wire harness side connector.

Standard voltage

Tester Connection	Specified Condition
1 - 3	4.7 to 5.3 V

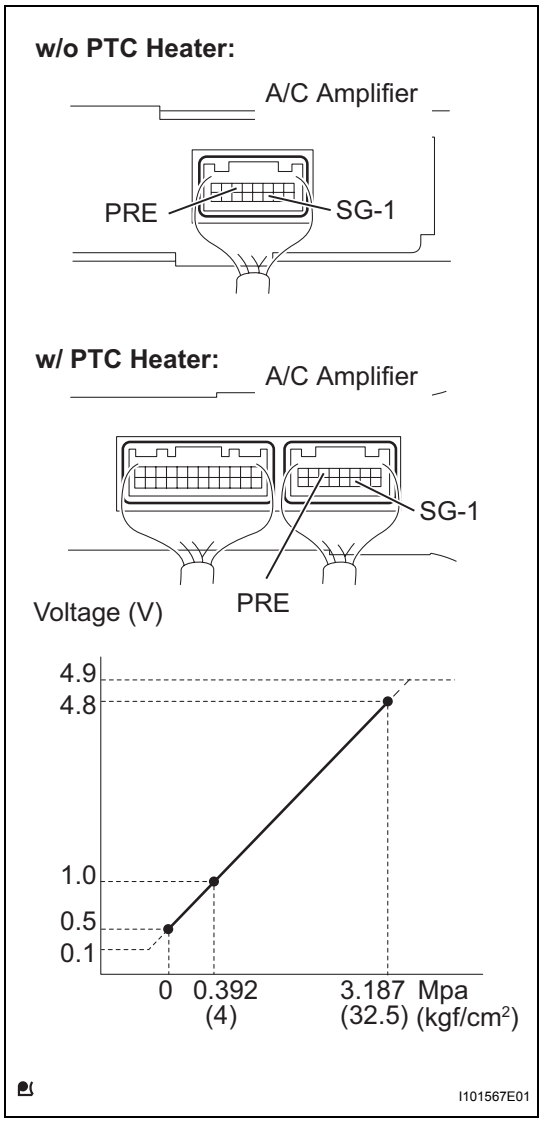

(b) Check the pressure sensor.
  (1) Set the manifold gauge.
  (2) Connect the connector to the pressure sensor.
  (3) Warm up the engine.
  (4) Switch A/C ON.
  (5) Using a voltmeter, measure the voltage between connector terminals 6 (PRE) and 11 (SG-1) of the air conditioner amplifier.
  HINT:
  Check from the rear of the connector while the it is connected to the air conditioning amplifier.
  Standard voltage

Refrigerant Pressure	Specified Condition
0.196 to 3.14 MPa (2.0 to 32 kgf/cm^2)	0.76 to 4.74 V

HEATER BLOWER MOTOR RELAY

COMPONENTS

for Hatchback:

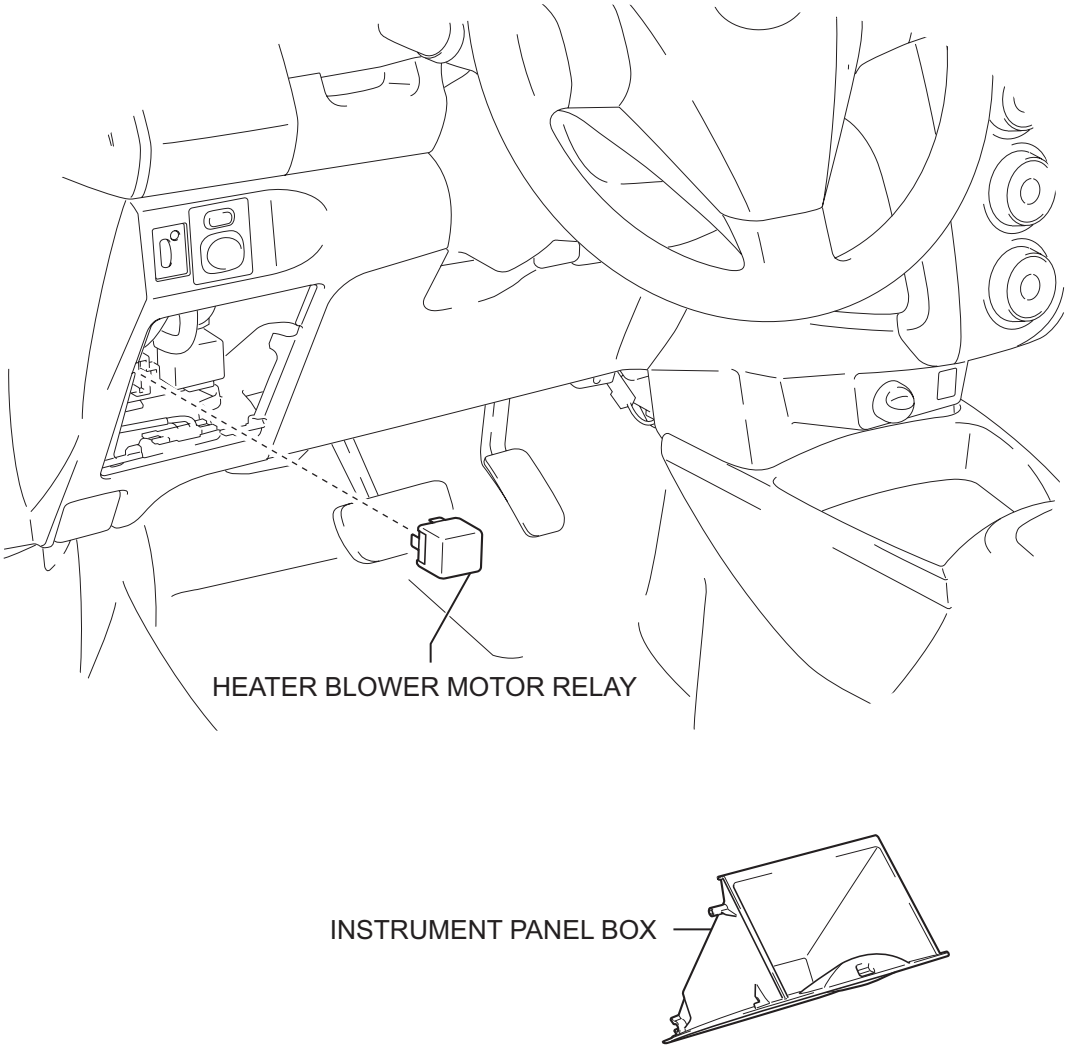

AC

P

I101540E01

for Sedan:

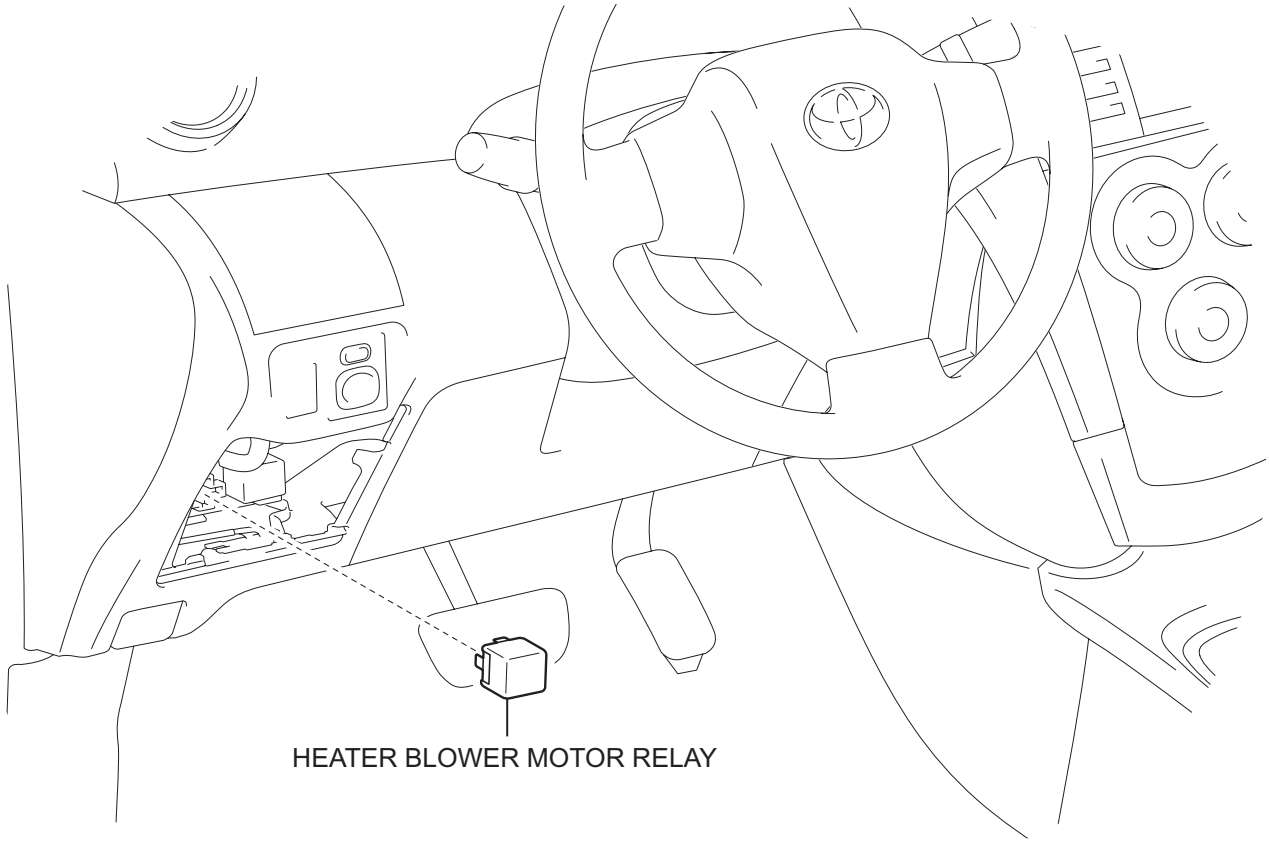

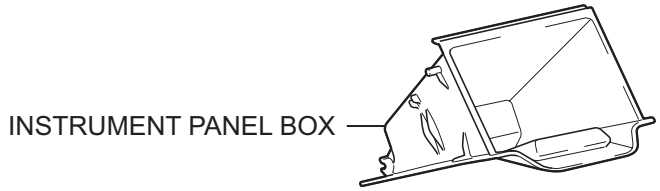

P

AC

I102619E01

REMOVAL

1. **DISCONNECT CABLE FROM NEGATIVE BATTERY TERMINAL**
2. **REMOVE INSTRUMENT PANEL BOX (for Hatchback) (See page IP-70)**
3. **REMOVE INSTRUMENT PANEL BOX (for Sedan) (See page IP-45)**
4. **REMOVE HEATER BLOWER MOTOR RELAY**
   (a) Remove the heater blower motor relay.

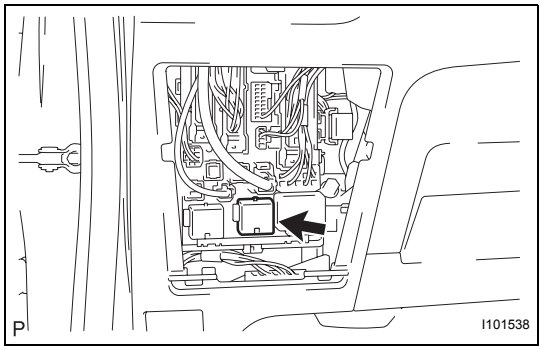

INSPECTION

1. **INSPECT HEATER BLOWER MOTOR RELAY**
   (a) Check the resistance.
      (1) Using an ohmmeter, measure the resistance between each terminal.
      Standard resistance

Tester Connection	Specified Condition
3 - 4	Below 1 Ω
3 - 4	10 kΩ or higher (Apply battery voltage to terminals 1 and 2)
3 - 5	10 kΩ or higher
3 - 5	Below 1 Ω (Apply battery voltage to terminals 1 and 2)

If the result is not as specified, replace the relay.

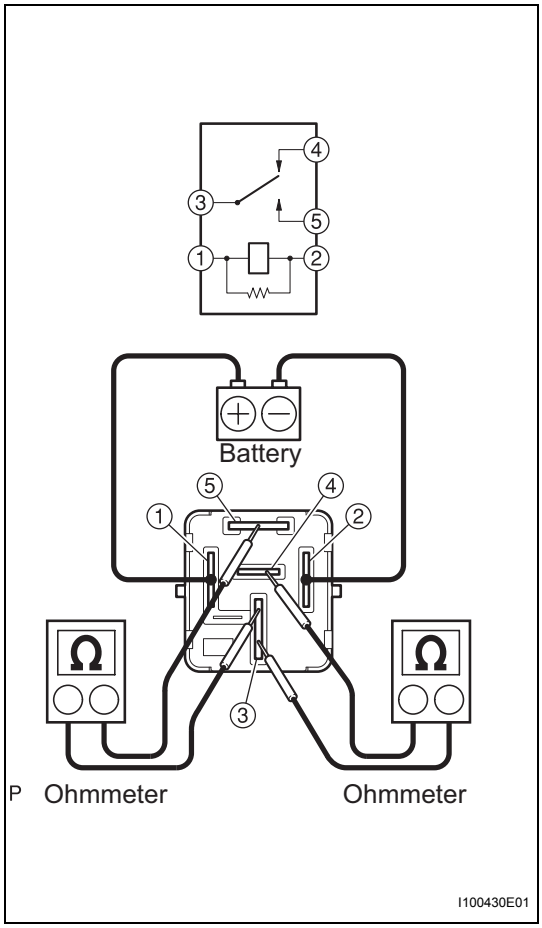

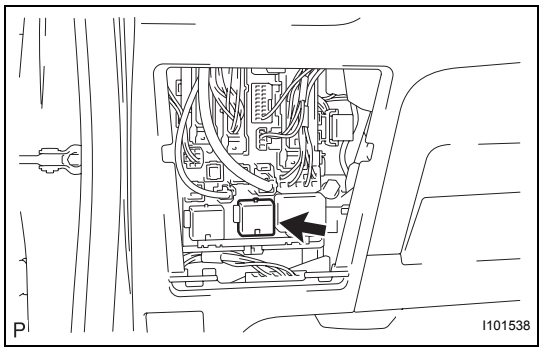

INSTALLATION

1. **INSTALL HEATER BLOWER MOTOR RELAY**
   (a) Install the heater blower motor relay.
2. **INSTALL INSTRUMENT PANEL BOX (for Hatchback) (See page IP-78)**
3. **INSTALL INSTRUMENT PANEL BOX (for Sedan) (See page IP-53)**
4. **CONNECT CABLE TO NEGATIVE BATTERY TERMINAL**
   Torque: 5.4 N*m (55 kgf*cm, 48 in.*lbf)

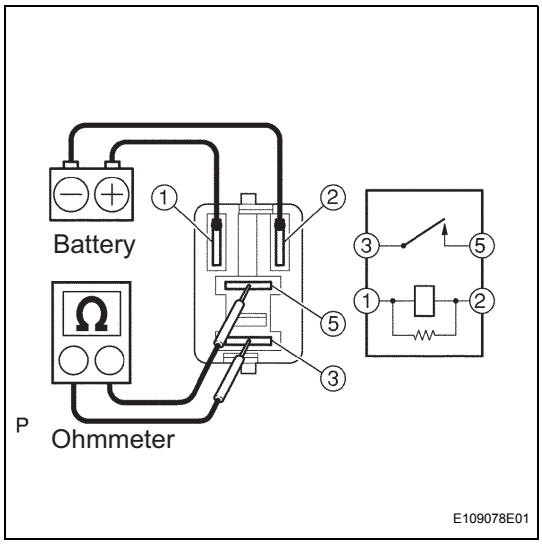

PTC HEATER RELAY

ON-VEHICLE INSPECTION

1. INSPECT PTC HEATER RELAY

(a) Check the resistance.

(1) Using an ohmmeter, measure the resistance between the terminals.

Standard resistance

Tester Connection	Specified Condition
3 - 5	10 kΩ or higher
3 - 5	Below 1 Ω (When battery voltage applied to terminals 1 and 2)

If the result is not as specified, replace the PTC heater relay.

AIR CONDITIONING PANEL ASSEMBLY (for Sedan)

COMPONENTS

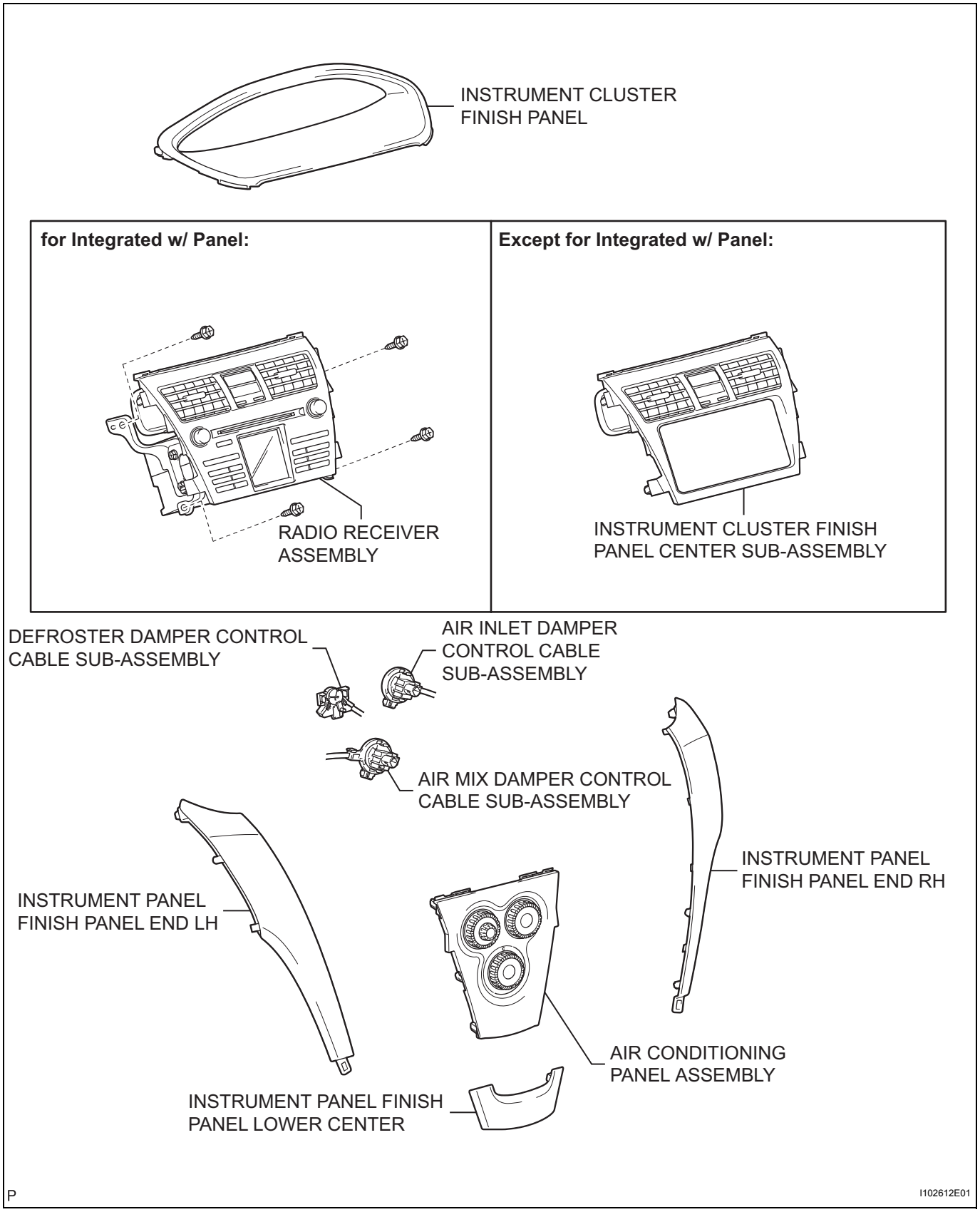

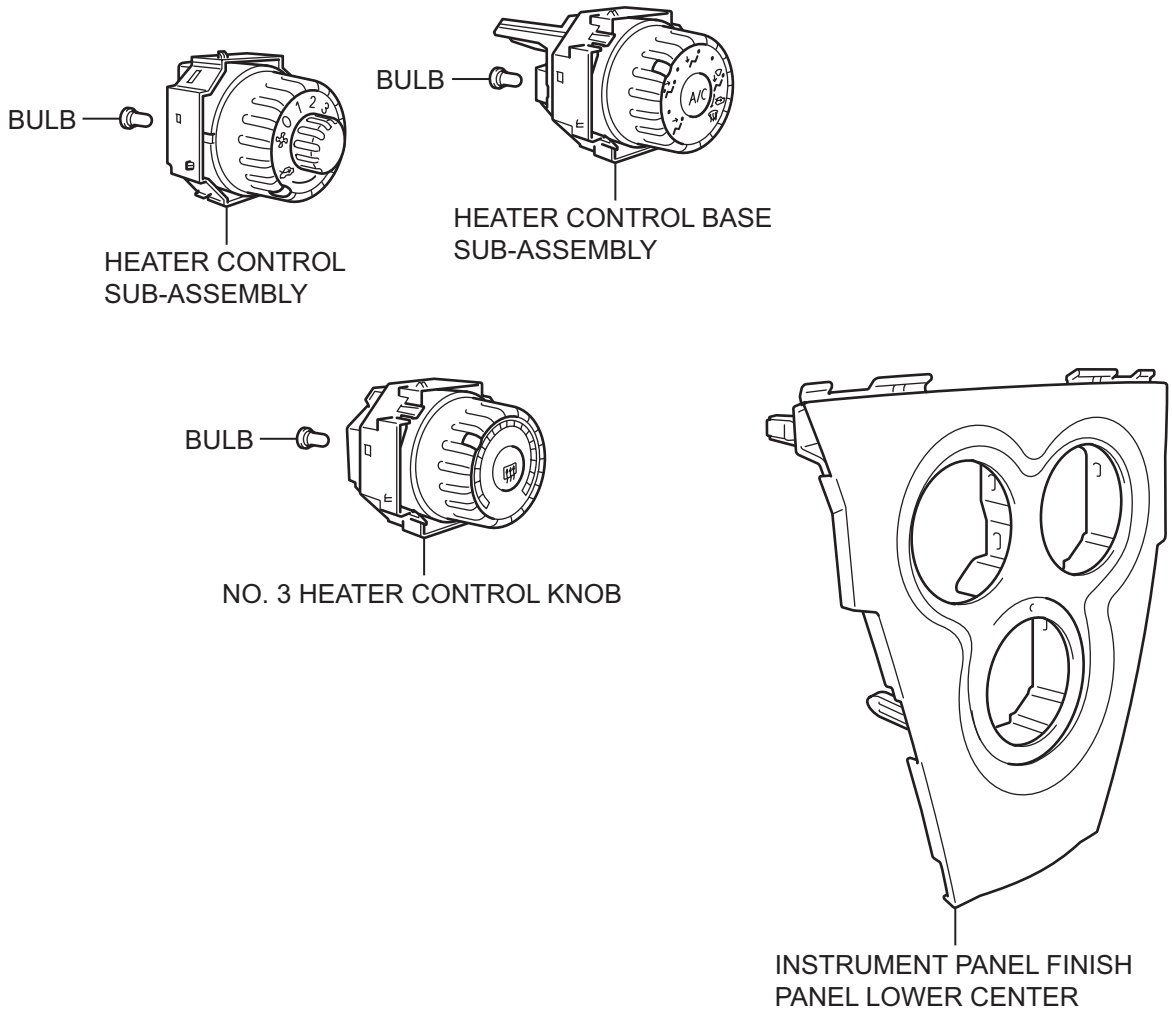
BULB
HEATER CONTROL SUB-ASSEMBLY
BULB
HEATER CONTROL BASE SUB-ASSEMBLY
BULB
NO. 3 HEATER CONTROL KNOB
INSTRUMENT PANEL FINISH PANEL LOWER CENTER

I102565E01

REMOVAL

1. **DISCONNECT CABLE FROM NEGATIVE BATTERY TERMINAL**
2. **REMOVE INSTRUMENT PANEL FINISH PANEL LOWER CENTER (See page ME-138)**
3. **REMOVE INSTRUMENT PANEL FINISH PANEL END LH (See page ME-138)**
4. **REMOVE INSTRUMENT PANEL FINISH PANEL END RH (See page ME-138)**
5. **REMOVE INSTRUMENT CLUSTER FINISH PANEL (See page ME-139)**
6. **REMOVE RADIO RECEIVER ASSEMBLY**
7. **REMOVE INSTRUMENT CLUSTER FINISH PANEL CENTER SUB-ASSEMBLY**
   (a) Disengage the 2 claws and 4 clips and remove the instrument cluster finish panel center.

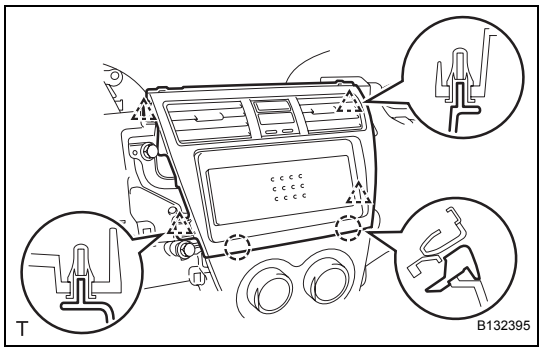

8. **REMOVE AIR CONDITIONING PANEL ASSEMBLY**
   (a) Disengage the 4 clips and 2 claws and remove the air conditioning panel.

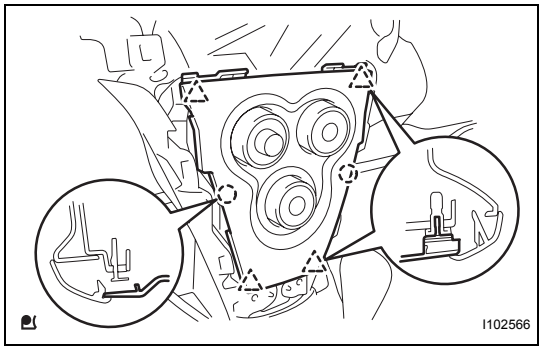

   (b) Disconnect the 3 connectors and 4 clamps.

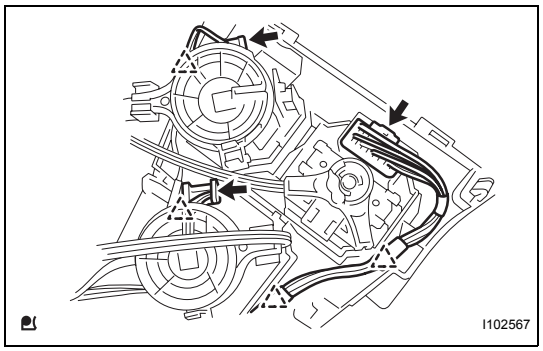

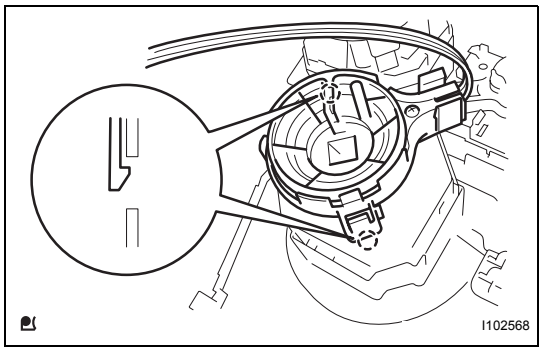

9. DISCONNECT AIR MIX DAMPER CONTROL CABLE SUB-ASSEMBLY

(a) Disconnect the air mix damper control cable from the clamp.

(b) Disengage the 2 claws and disconnect the air mix damper control cable.

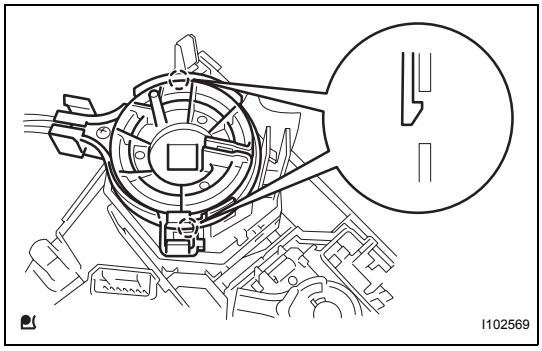

10. DISCONNECT DEFROSTER DAMPER CONTROL CABLE SUB-ASSEMBLY

(a) Disengage the 2 claws and disconnect the defroster damper control cable.

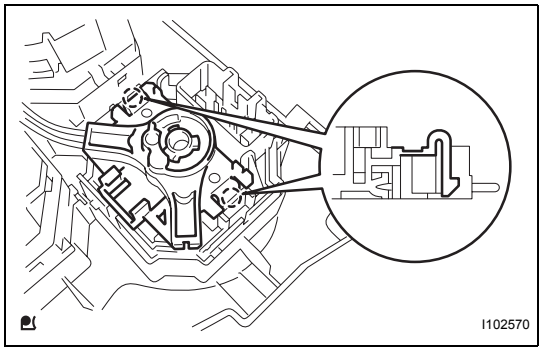

11. DISCONNECT AIR INLET DAMPER CONTROL CABLE SUB-ASSEMBLY

(a) Disengage the 2 claws and disconnect the air inlet damper control cable.

DISASSEMBLY

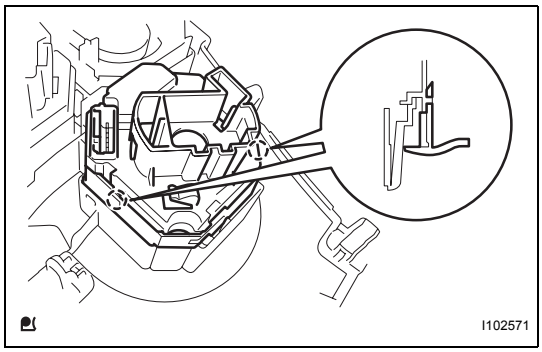

1. REMOVE NO. 3 HEATER CONTROL KNOB

(a) Disengage the 2 claws and remove the No. 3 heater control knob.

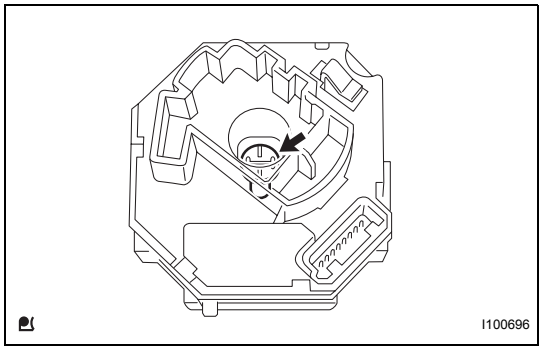

(b) Remove the bulb.

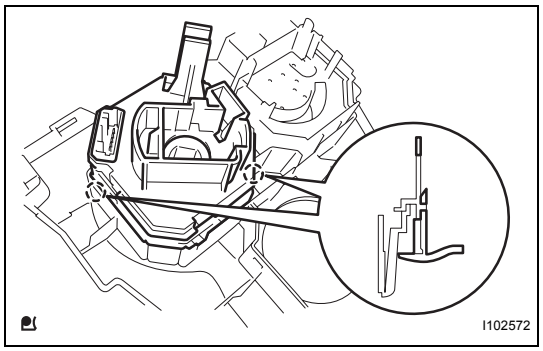

2. REMOVE HEATER CONTROL BASE SUB-ASSEMBLY

(a) Disengage the 2 claws and remove the heater control base.

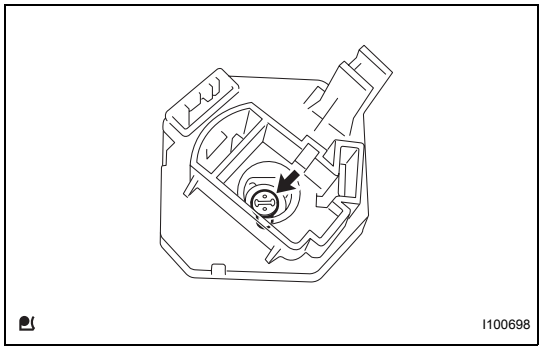

(b) Remove the bulb.

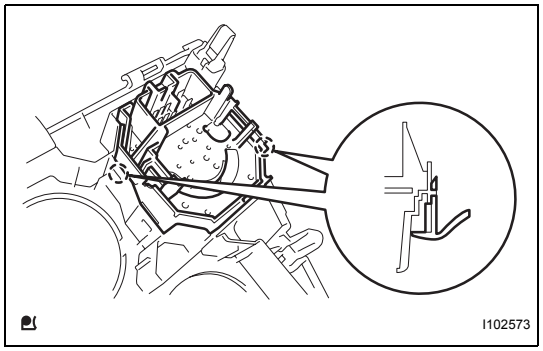

3. REMOVE HEATER CONTROL SUB-ASSEMBLY

(a) Disengage the 2 claws and remove the heater control.

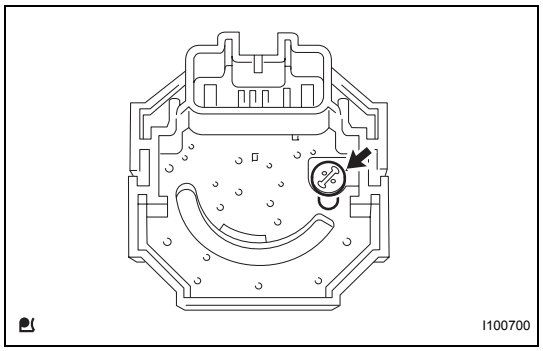

(b) Remove the bulb.

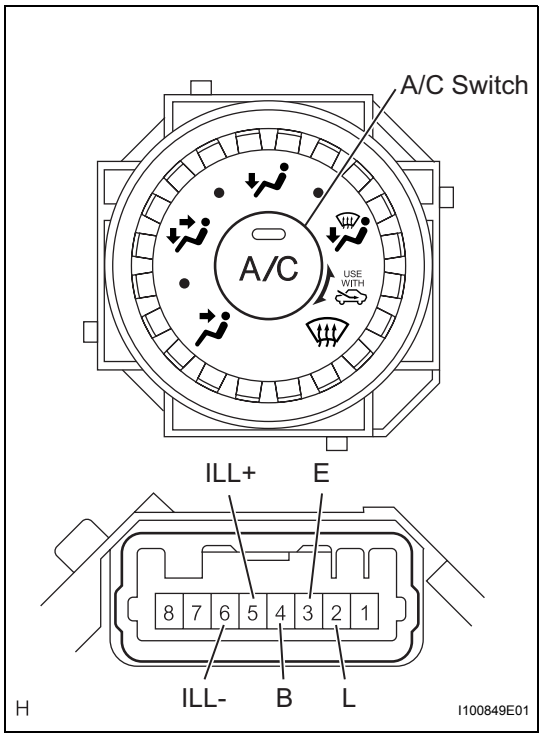

INSPECTION

1. INSPECT HEATER CONTROL BASE SUB-ASSEMBLY

(a) Check the heater control base resistance.

(1) Using an ohmmeter, measure the resistance and check the results in accordance with the values in the table below.

Standard resistance

Tester Connection	Condition	Specified Condition
2 (L) - 3 (E)	Always	10 kΩ or higher
2 (L) - 4 (B)	A/C switch OFF	10 kΩ or higher
3 (E) - 4 (B)	Always	10 kΩ or higher
2 (L) - 4 (B)	A/C switch ON	Below 1 Ω
5 (ILL+) - 6 (ILL-)	Always	Below 1 Ω

If the result is not as specified, replace the heater control base.

(b) Check the A/C indicator operation.

(1) Connect the positive (+) lead from the battery to terminal 2 (L) and the negative (-) lead to terminal (E).

(2) Push the A/C switch in and check that the indicator lights up.

Standard:

Indicator lights up

If the result is not as specified, replace the heater control base.

(c) Check the illumination operation.

(1) Connect the positive (+) lead from the battery to terminal 5 (ILL+) and the negative (-) lead to terminal 6 (ILL-), then check that the bulb illuminates.

Standard:

Bulb illuminates

If the result is not as specified, replace the bulb.

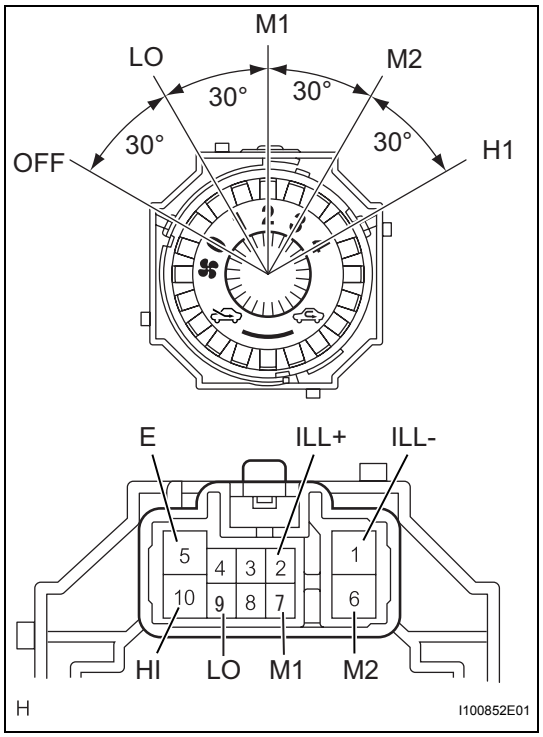

2. INSPECT HEATER CONTROL SUB-ASSEMBLY

(a) Check the heater control resistance.

(1) Using an ohmmeter, measure the resistance and check the results in accordance with the values in the table below.

Standard resistance

Switch Position	Tester Connection	Specified Condition
OFF	ALL - 5 (E)	10 kΩ or higher
LO	9 (LO) - 5 (E)	Below 1 Ω
LO - M1	9 (LO) - 5 (E) - 7 (M1)	Below 1 Ω
M1	9 (LO) - 5 (E) - 7 (M1)	Below 1 Ω
M1 - M2	9 (LO) - 5 (E) - 7 (M1) - 6 (M2)	Below 1 Ω
M2	9 (LO) - 5 (E) - 6 (M2)	Below 1 Ω
M2 - HI	9 (LO) - 5 (E) - 6 (M2) - 10 (HI)	Below 1 Ω
HI	9 (LO) - 5 (E) - 10 (HI)	Below 1 Ω

If the result is not as specified, replace the heater control.

(b) Check the illumination operation.

(1) Connect the positive (+) lead from the battery to terminal 2 (ILL+) and the negative (-) lead to terminal 1 (ILL-), then check that the bulb illuminates.

Standard:

Bulb illuminates

If the result is not as specified, replace the bulb.

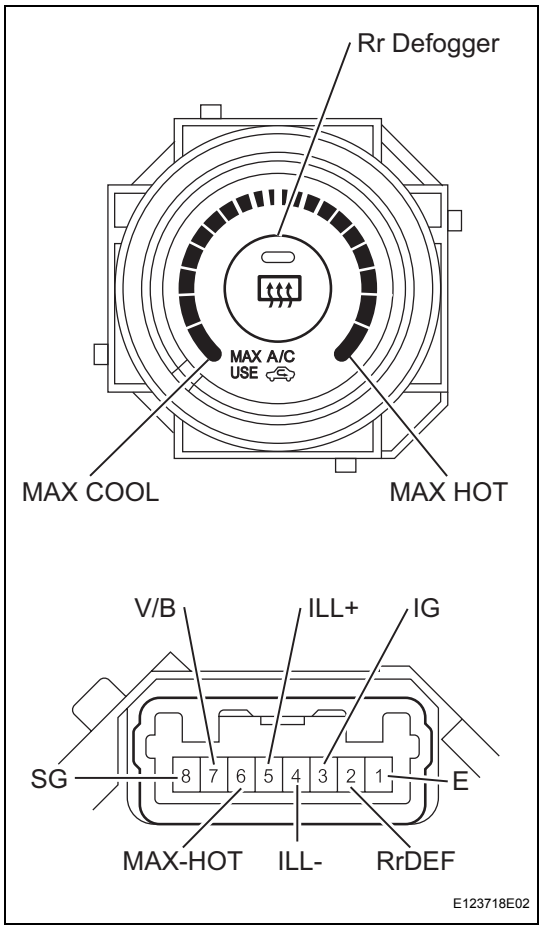

3. INSPECT NO. 3 HEATER CONTROL KNOB

(a) Check the No. 3 heater control knob resistance.

(1) Using an ohmmeter, measure the resistance and check the results in accordance with the values in the table below.

Standard resistance

Tester Connection	Condition	Specified Condition
2 (RrDEF) - 1 (E)	Rr. DEF switch OFF	10 kΩ or higher
2 (RrDEF) - 1 (E)	Rr. DEF switch ON	Below 1 Ω
3 (IG) - 6 (MAX HOT)	Except MAX HOT	10 kΩ or higher
3 (IG) - 6 (MAX HOT)	MAX HOT	Below 1 Ω
4 (ILL-) - 5 (ILL+)	Always	Below 1 Ω
7 (V/B) - 8 (SG)	Always	Below 1 Ω

If the result is not as specified, replace the No. 3 heater control knob.

(b) Check the Rr. DEF indicator operation.

(1) Connect the positive (+) lead from the battery to terminal 3 (IG) and the negative (-) lead to terminal 1 (E).

(2) Push the Rr. DEF switch in and check that the indicator lights up.

Standard:

Indicator lights up

If the result is not as specified, replace the No. 3 heater control knob.

(c) Check the illumination operation.

(1) Connect the positive (+) lead from the battery to terminal 5 (ILL+) and the negative (-) lead to terminal 4 (ILL-), then check that the bulb illuminates.

Standard:

Bulb illuminates

If the result is not as specified, replace the bulb.

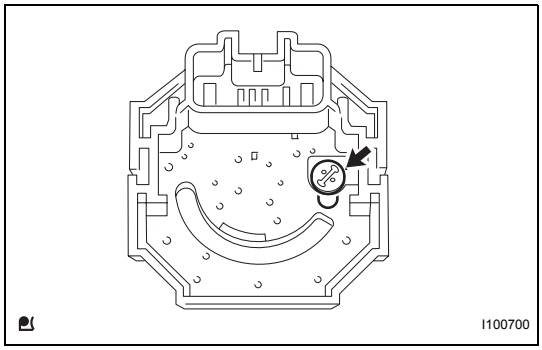

REASSEMBLY

1. INSTALL HEATER CONTROL SUB-ASSEMBLY

(a) Install the bulb.

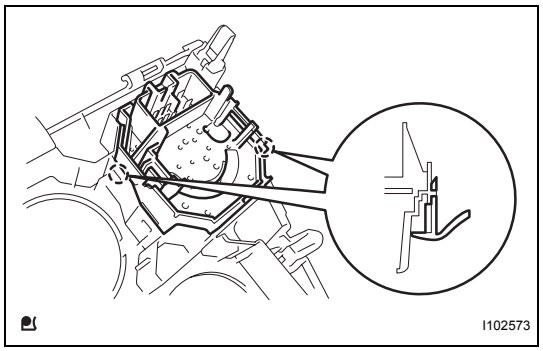

(b) Engage the 2 claws and install the heater control.

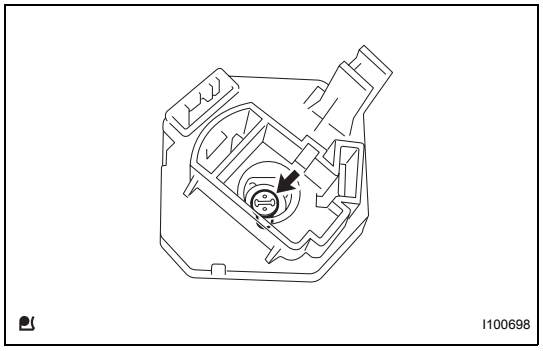

2. INSTALL HEATER CONTROL BASE SUB-ASSEMBLY

(a) Install the bulb.

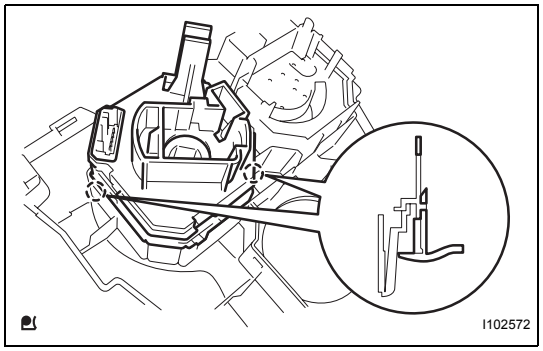

(b) Engage the 2 claws and install the heater control base.

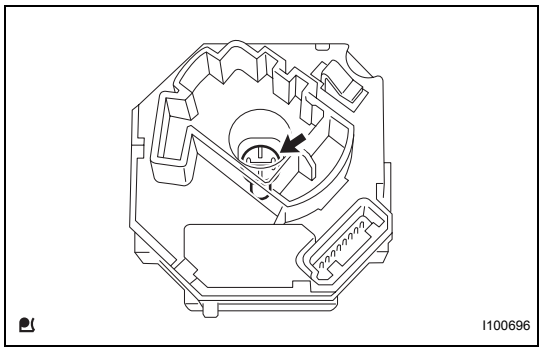

3. INSTALL NO. 3 HEATER CONTROL KNOB

(a) Install the bulb.

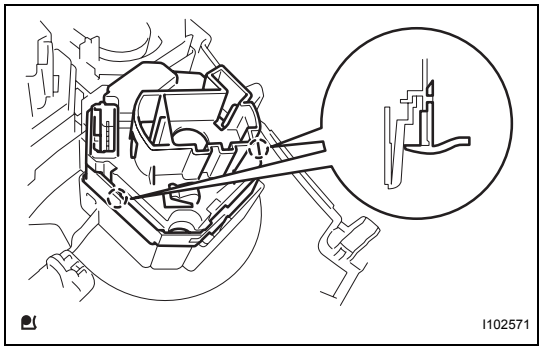

(b) Engage the 2 claws and install the No. 3 heater control knob.

INSTALLATION

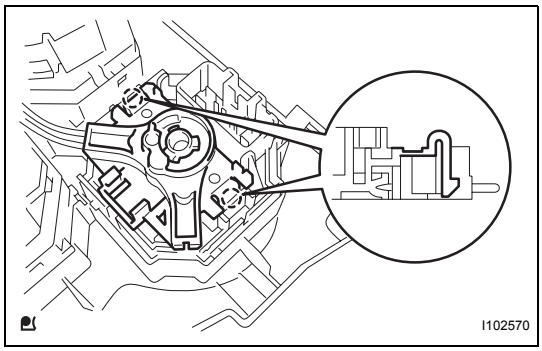

1. CONNECT AIR INLET DAMPER CONTROL CABLE SUB-ASSEMBLY

(a) Engage the 2 claws and connect the air inlet damper control cable.

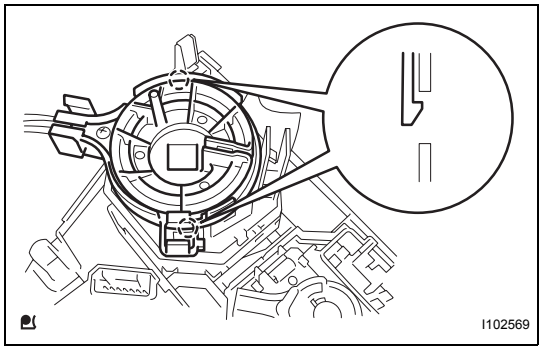

2. CONNECT DEFROSTER DAMPER CONTROL CABLE SUB-ASSEMBLY

(a) Engage the 2 claws and connect the defroster damper control cable.

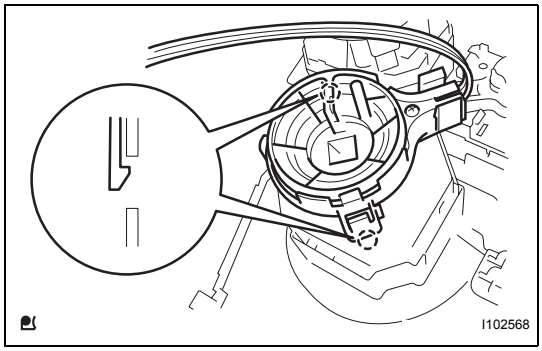

3. CONNECT AIR MIX DAMPER CONTROL CABLE SUB-ASSEMBLY

(a) Engage the 2 claws and connect the air mix control cable clamp.

(b) Connect the air mix damper control cable to the clamp.

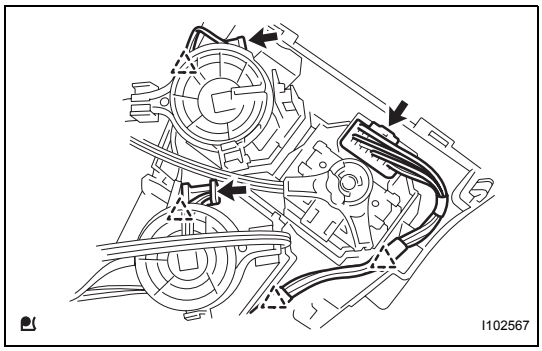

4. INSTALL AIR CONDITIONING PANEL ASSEMBLY

(a) Connect the 3 connectors and the 4 clamps.

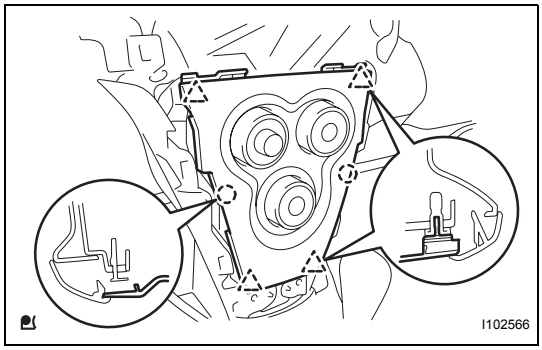

(b) Engage the 4 clips and 2 claws and install the air conditioning panel.

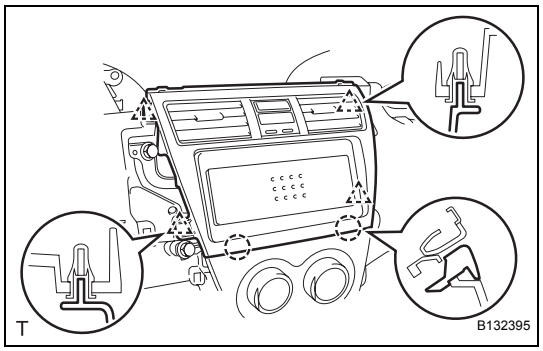

5. **INSTALL INSTRUMENT CLUSTER FINISH PANEL CENTER SUB-ASSEMBLY**
   (a) Engage the 4 clips and 2 claws and install the instrument cluster finish panel.
6. **INSTALL RADIO RECEIVER ASSEMBLY**
7. **INSTALL INSTRUMENT CLUSTER FINISH PANEL (See page ME-140)**
8. **INSTALL INSTRUMENT PANEL FINISH PANEL END RH (See page ME-141)**
9. **INSTALL INSTRUMENT PANEL FINISH PANEL END LH (See page ME-141)**
10. **INSTALL INSTRUMENT PANEL FINISH PANEL LOWER CENTER (See page ME-142)**
11. **CONNECT CABLE TO NEGATIVE BATTERY TERMINAL**
    Torque: 5.4 N*m (55 kgf*cm, 48 in.*lbf)

AIR CONDITIONING PANEL ASSEMBLY (for Hatchback)

COMPONENTS

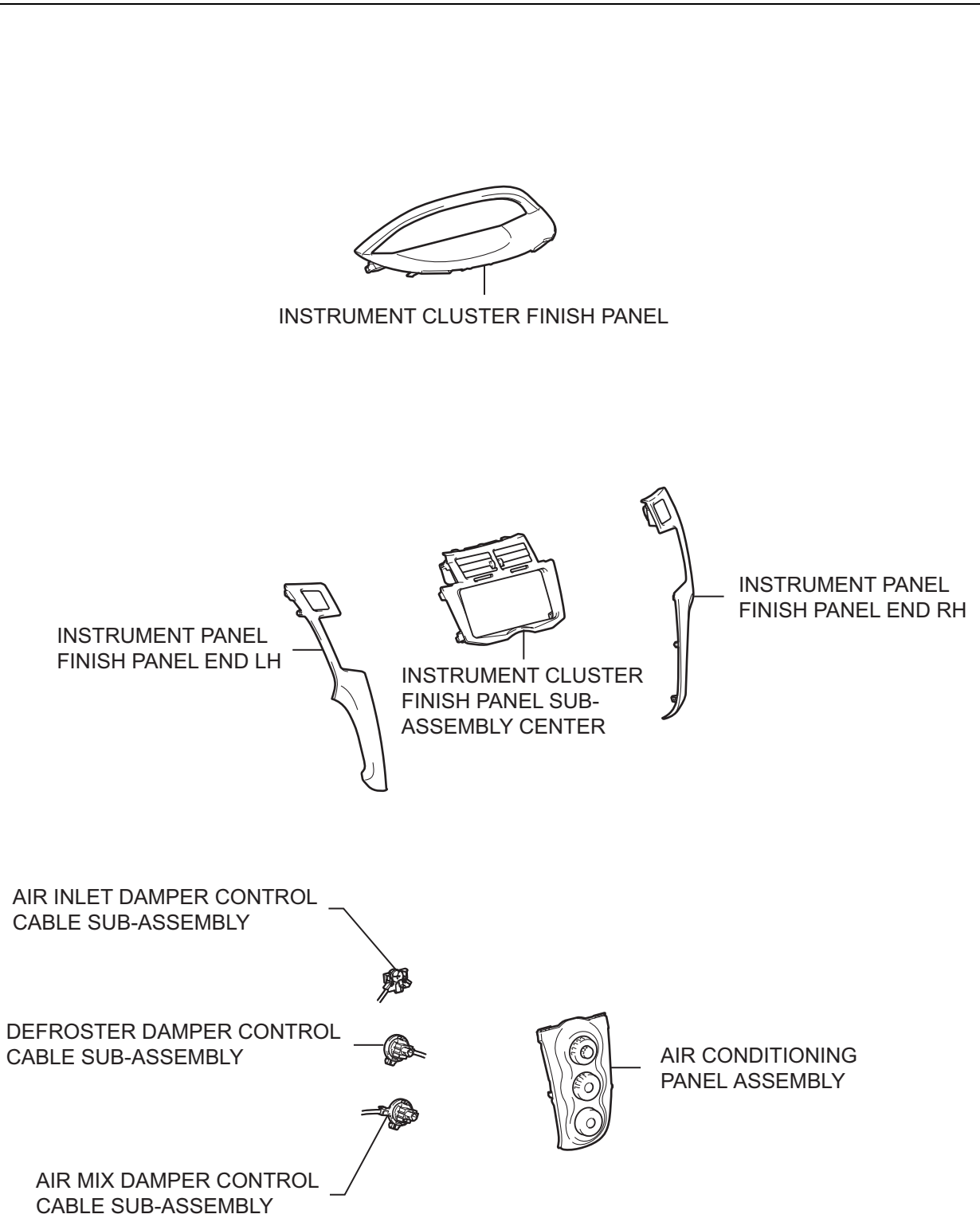

P

I101251E01

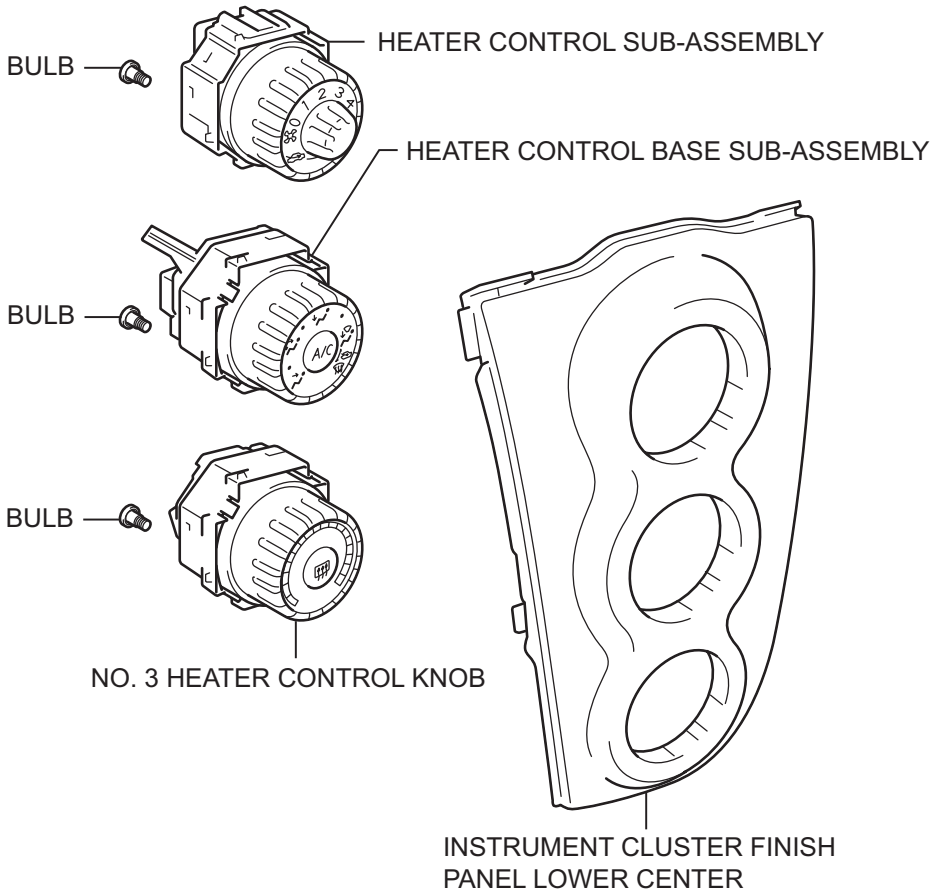
BULB
HEATER CONTROL SUB-ASSEMBLY
HEATER CONTROL BASE SUB-ASSEMBLY
BULB
BULB
NO. 3 HEATER CONTROL KNOB
INSTRUMENT CLUSTER FINISH
PANEL LOWER CENTER

I100683E01

REMOVAL

1. **DISCONNECT CABLE FROM NEGATIVE BATTERY TERMINAL**
2. **REMOVE INSTRUMENT PANEL FINISH PANEL END LH (See page ME-145)**
3. **REMOVE INSTRUMENT PANEL FINISH PANEL END RH (See page ME-145)**
4. **REMOVE INSTRUMENT CLUSTER FINISH PANEL (See page ME-145)**
5. **REMOVE INSTRUMENT CLUSTER FINISH PANEL SUB-ASSEMBLY CENTER**
   (a) Disengage the 2 claws and 4 clips and remove the instrument cluster finish panel center.
   NOTICE:
   - **Grip the rib portion of the instrument cluster finish panel center by hand to remove it.**
   - **To avoid breakage of the instrument cluster finish panel center when removing it, do not apply excessive force to the register or pull out the rink or panel portions.**

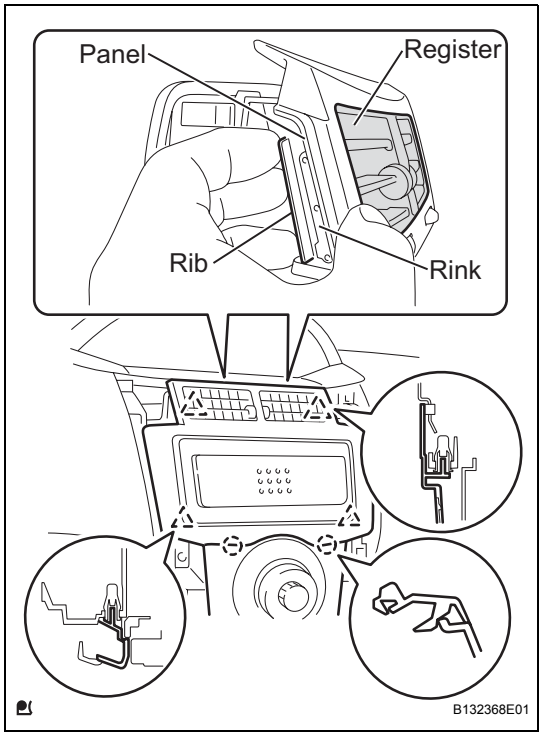

6. **REMOVE AIR CONDITIONING PANEL ASSEMBLY**
   (a) Disengage the 3 clips and 2 claws and remove the air conditioning panel.

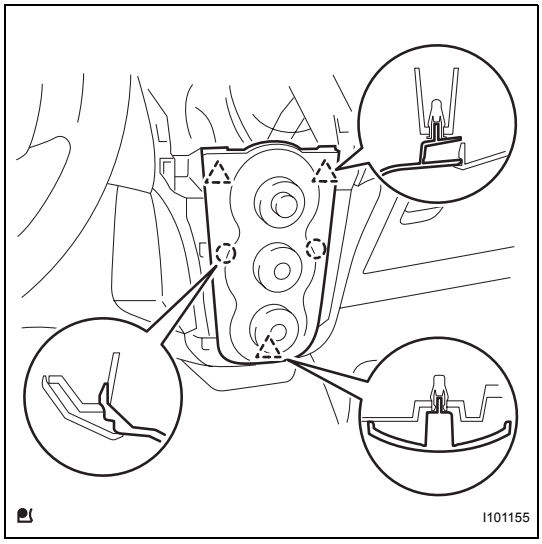

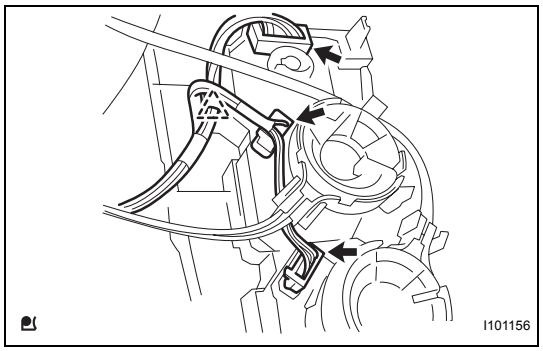

(b) Disconnect the 3 connectors and the clamp.

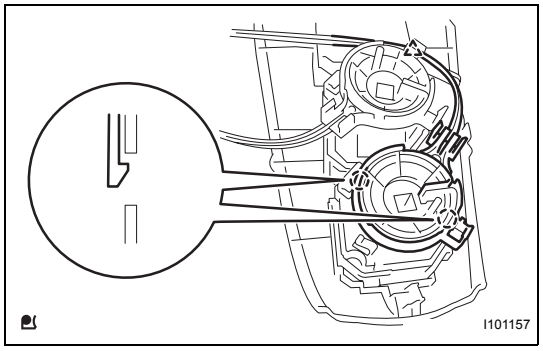

7. DISCONNECT AIR MIX DAMPER CONTROL CABLE SUB-ASSEMBLY

(a) Disconnect the air mix control cable from the clamp.

(b) Disengage the 2 claws and disconnect the air mix damper control cable.

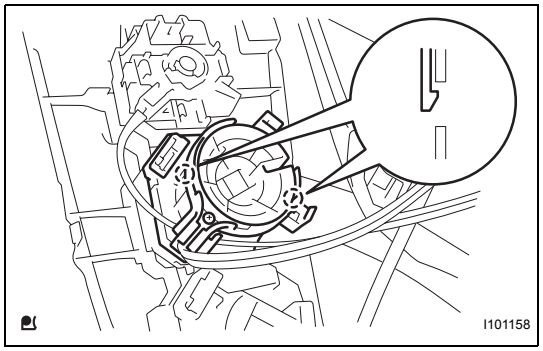

8. DISCONNECT DEFROSTER DAMPER CONTROL CABLE SUB-ASSEMBLY

(a) Disengage the 2 claws and disconnect the defroster damper control cable.

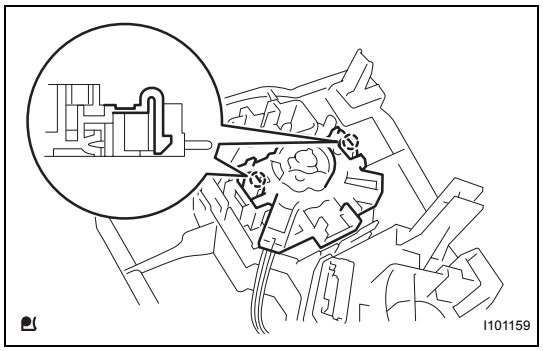

9. DISCONNECT AIR INLET DAMPER CONTROL CABLE SUB-ASSEMBLY

(a) Disengage the 2 claws and disconnect the air inlet damper control cable.

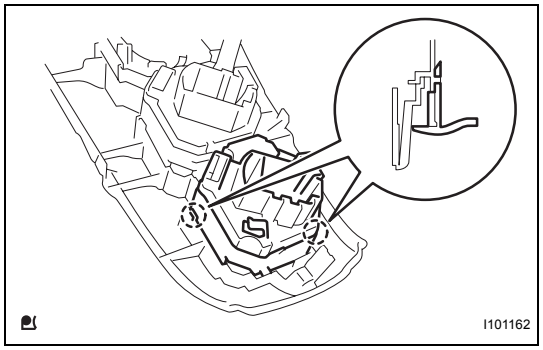

DISASSEMBLY

1. REMOVE NO. 3 HEATER CONTROL KNOB

(a) Disengage the 2 claws and remove the NO. 3 heater control knob.

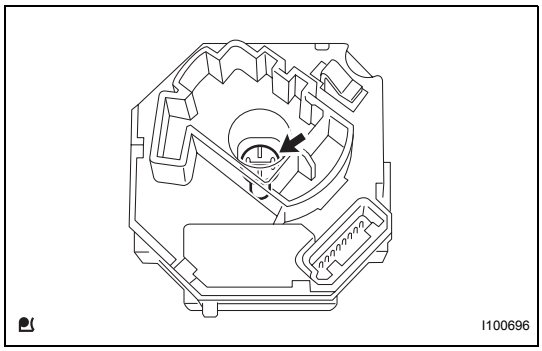

(b) Remove the bulb.

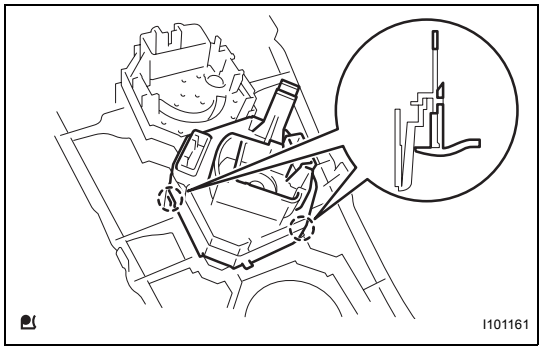

2. REMOVE HEATER CONTROL BASE SUB-ASSEMBLY

(a) Disengage the 2 claws and remove the heater control base.

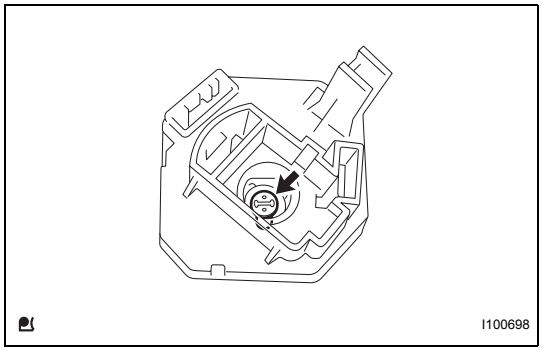

(b) Remove the bulb.

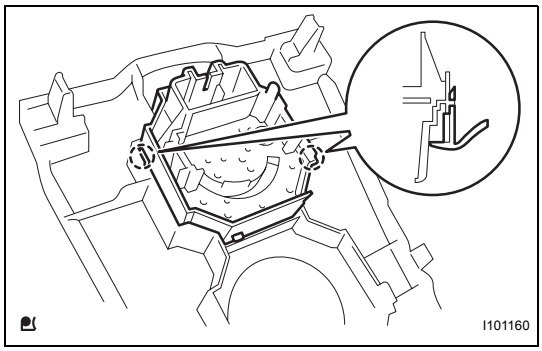

3. REMOVE HEATER CONTROL SUB-ASSEMBLY

(a) Disengage the 2 claws and remove the heater control.

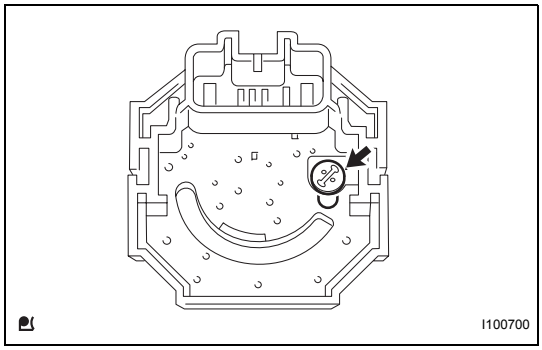

(b) Remove the bulb.

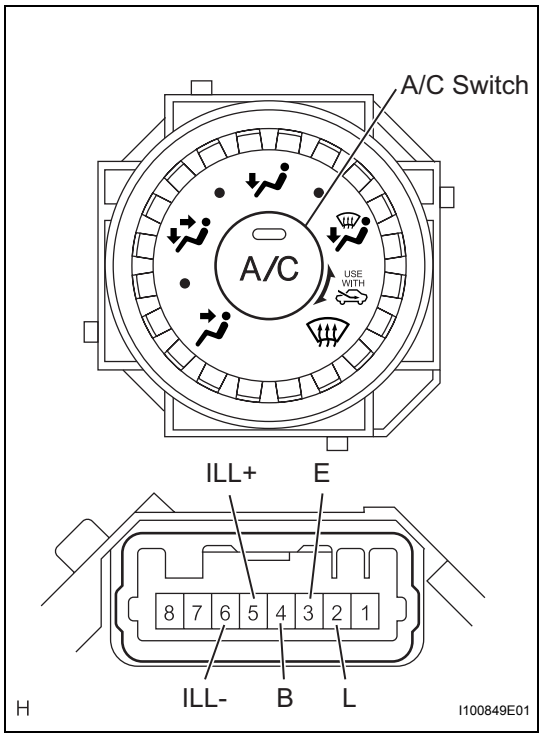

INSPECTION

1. INSPECT HEATER CONTROL BASE SUB-ASSEMBLY

(a) Check the heater control base resistance.

(1) Using an ohmmeter, measure the resistance and check the results in accordance with the values in the table below.

Standard resistance

Tester Connection	Condition	Specified Condition
2 (L) - 3 (E)	Always	10 kΩ or higher
2 (L) - 4 (B)	A/C switch OFF	10 kΩ or higher
3 (E) - 4 (B)	Always	10 kΩ or higher
2 (L) - 4 (B)	A/C switch ON	Below 1 Ω
5 (ILL+) - 6 (ILL-)	Always	Below 1 Ω

If the result is not as specified, replace the heater control base.

(b) Check the A/C indicator operation.

(1) Connect the positive (+) lead from the battery to terminal 2 (L) and the negative (-) lead to terminal (E).

(2) Push the A/C switch in and check that the indicator lights up.

Standard:

indicator lights up

If the result is not as specified, replace the heater control base.

(c) Check the illumination operation.

(1) Connect the positive (+) lead from the battery to terminal 5 (ILL+) and the negative (-) lead to terminal 6 (ILL-), then check that the bulb illuminates.

Standard:

Bulb illuminates

If the result is not as specified, replace the bulb.

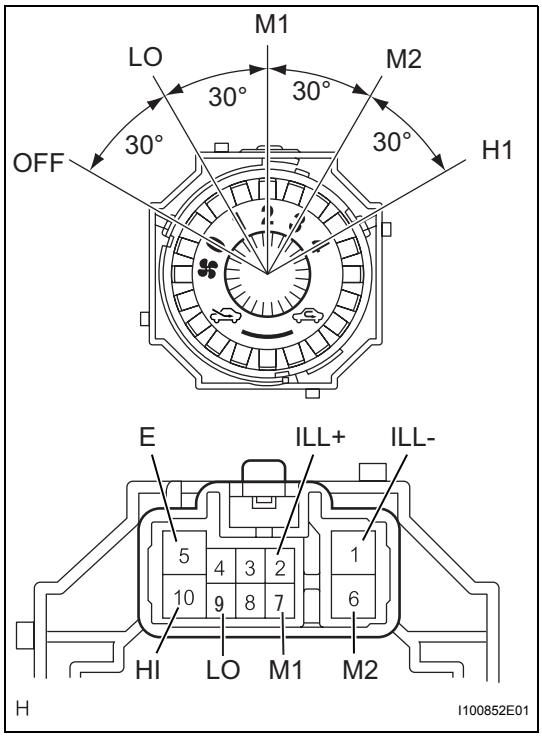

2. INSPECT HEATER CONTROL SUB-ASSEMBLY

(a) Check the heater control resistance.

(1) Using an ohmmeter, measure the resistance and check the results in accordance with the values in the table below.

Standard resistance

Switch Position	Tester Connection	Specified Condition
OFF	ALL - 5 (E)	10 kΩ or higher
LO	9 (LO) - 5 (E)	Below 1 Ω
LO - M1	9 (LO) - 5 (E) - 7 (M1)	Below 1 Ω
M1	9 (LO) - 5 (E) - 7 (M1)	Below 1 Ω
M1 - M2	9 (LO) - 5 (E) - 7 (M1) - 6 (M2)	Below 1 Ω
M2	9 (LO) - 5 (E) - 6 (M2)	Below 1 Ω
M2 - HI	9 (LO) - 5 (E) - 6 (M2) - 10 (HI)	Below 1 Ω
HI	9 (LO) - 5 (E) - 10 (HI)	Below 1 Ω

If the result is not as specified, replace the heater control.

(b) Check the illumination operation.

(1) Connect the positive (+) lead from the battery to terminal 2 (ILL+) and the negative (-) lead to terminal 1 (ILL-), then check that the bulb illuminates.

Standard:

Bulb illuminates

If the result is not as specified, replace the bulb.

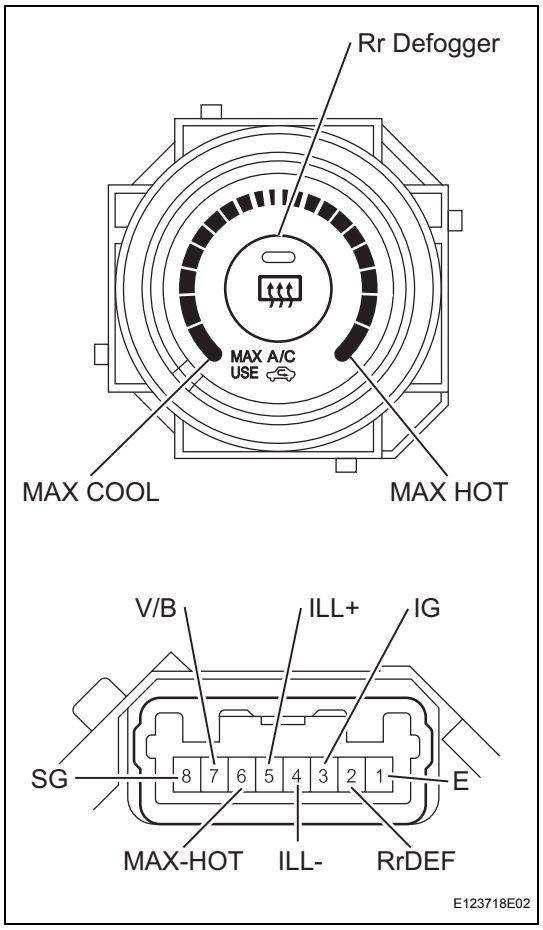

3. INSPECT NO. 3 HEATER CONTROL KNOB

(a) Check the No. 3 heater control knob resistance.

(1) Using an ohmmeter, measure the resistance and check the results in accordance with the values in the table below.

Standard resistance

Tester Connection	Condition	Specified Condition
2 (RrDEF) - 1 (E)	Rr. DEF switch OFF	10 kΩ or higher
2 (RrDEF) - 1 (E)	Rr. DEF switch ON	Below 1 Ω
3 (IG) - 6 (MAX HOT)	Except MAX HOT	10 kΩ or higher
3 (IG) - 6 (MAX HOT)	MAX HOT	Below 1 Ω
4 (ILL-) - 5 (ILL+)	Always	Below 1 Ω
7 (V/B) - 8 (SG)	Always	Below 1 Ω

If the result is not as specified, replace the No. 3 heater control knob.

(b) Check the Rr. DEF indicator operation.

(1) Connect the positive (+) lead from the battery to terminal 3 (IG) and the negative (-) lead to terminal 1 (E).

(2) Push the Rr. DEF switch in and check that the indicator lights up.

Standard:

indicator lights up

If the result is not as specified, replace the No. 3 heater control knob.

(c) Check the illumination operation.

(1) Connect the positive (+) lead from the battery to terminal 5 (ILL+) and the negative (-) lead to terminal 4 (ILL-), then check that the bulb illuminates.

Standard:

Bulb illuminates

If the result is not as specified, replace the bulb.

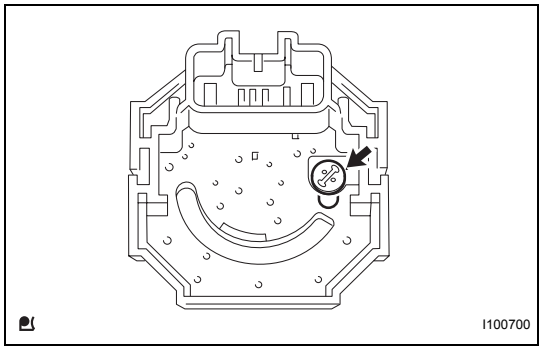

REASSEMBLY

1. INSTALL HEATER CONTROL SUB-ASSEMBLY

(a) Install the bulb.

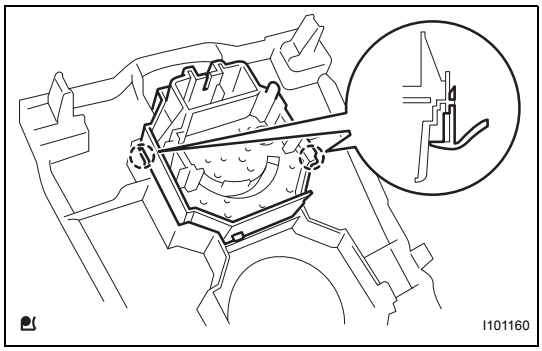

(b) Engage the 2 claws and install the heater control.

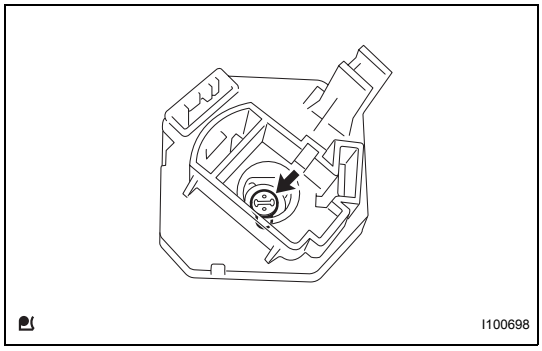

2. INSTALL HEATER CONTROL BASE SUB-ASSEMBLY

(a) Install the bulb.

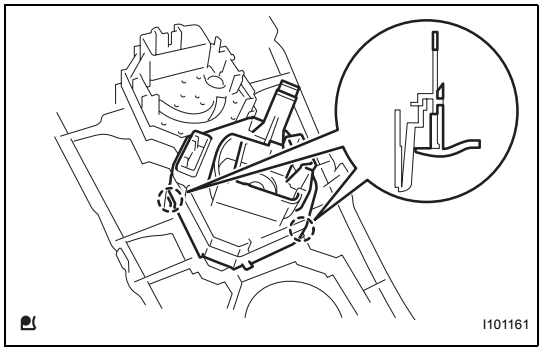

(b) Engage the 2 claws and install the heater control base.

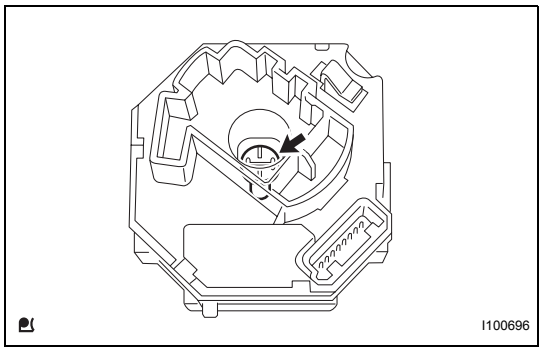

3. INSTALL NO. 3 HEATER CONTROL KNOB

(a) Install the bulb.

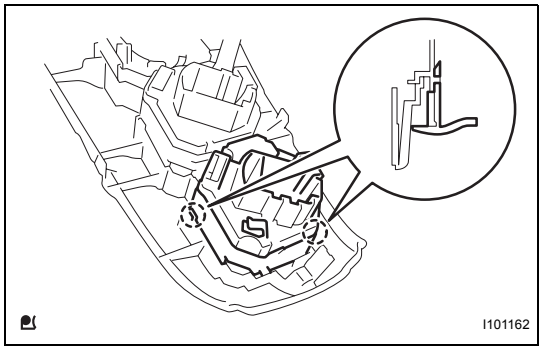

(b) Engage the 2 claws and install the No. 3 heater control knob.

INSTALLATION

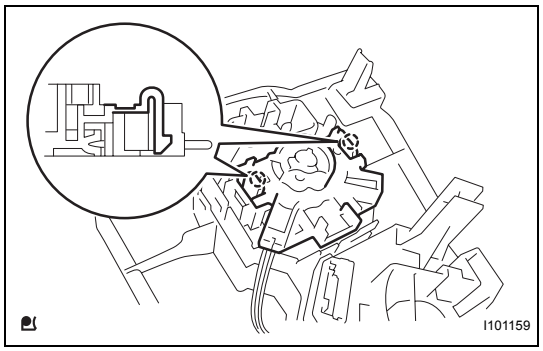

1. CONNECT AIR INLET DAMPER CONTROL CABLE SUB-ASSEMBLY

(a) Engage the 2 claws and connect the air inlet damper control cable.

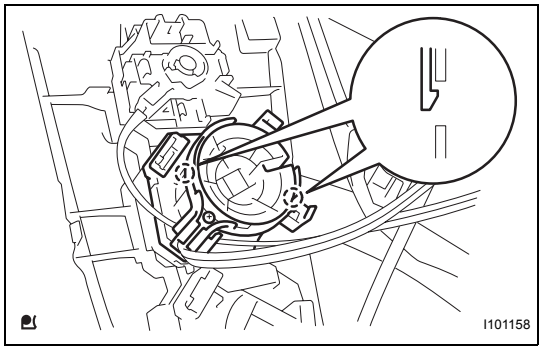

2. CONNECT DEFROSTER DAMPER CONTROL CABLE SUB-ASSEMBLY

(a) Engage the 2 claws and connect the defroster damper control cable.

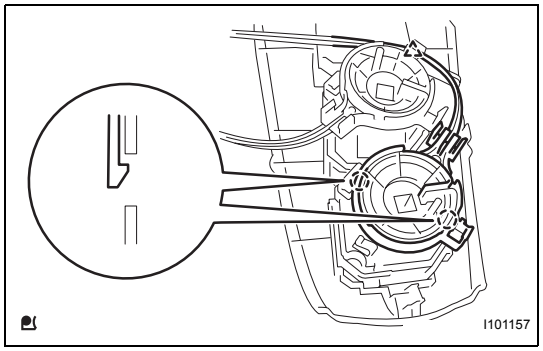

3. CONNECT AIR MIX DAMPER CONTROL CABLE SUB-ASSEMBLY

(a) Engage the 2 claws and connect the air mix control cable clamp.

(b) Connect the defroster damper control cable to the clamp.

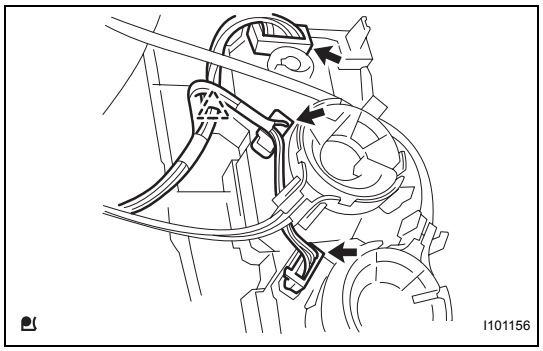

4. INSTALL AIR CONDITIONING PANEL ASSEMBLY

(a) Connect the 3 connectors and the clamp.

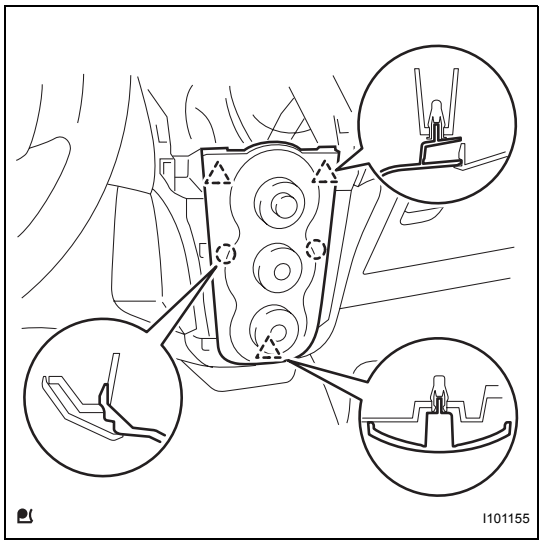

(b) Engage the 3 clips and 2 claws and install the air conditioning panel.

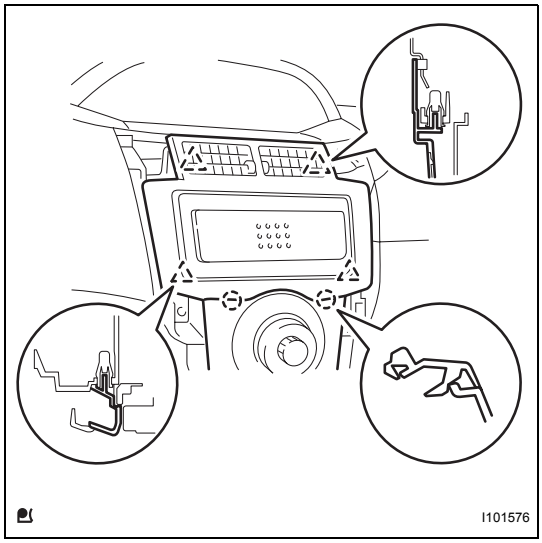

5. INSTALL INSTRUMENT CLUSTER FINISH PANEL SUB-ASSEMBLY CENTER

(a) Engage the 4 clips and 2 claws and install the air conditioning panel.

6. INSTALL INSTRUMENT CLUSTER FINISH PANEL (See page ME-148)

7. INSTALL INSTRUMENT PANEL FINISH PANEL END RH (See page ME-149)

8. INSTALL INSTRUMENT PANEL FINISH PANEL END LH (See page ME-149)

9. CONNECT CABLE TO NEGATIVE BATTERY TERMINAL
Torque: 5.4 N*m (55 kgf*cm, 48 in.*lbf)

AIR CONDITIONING AMPLIFIER

COMPONENTS

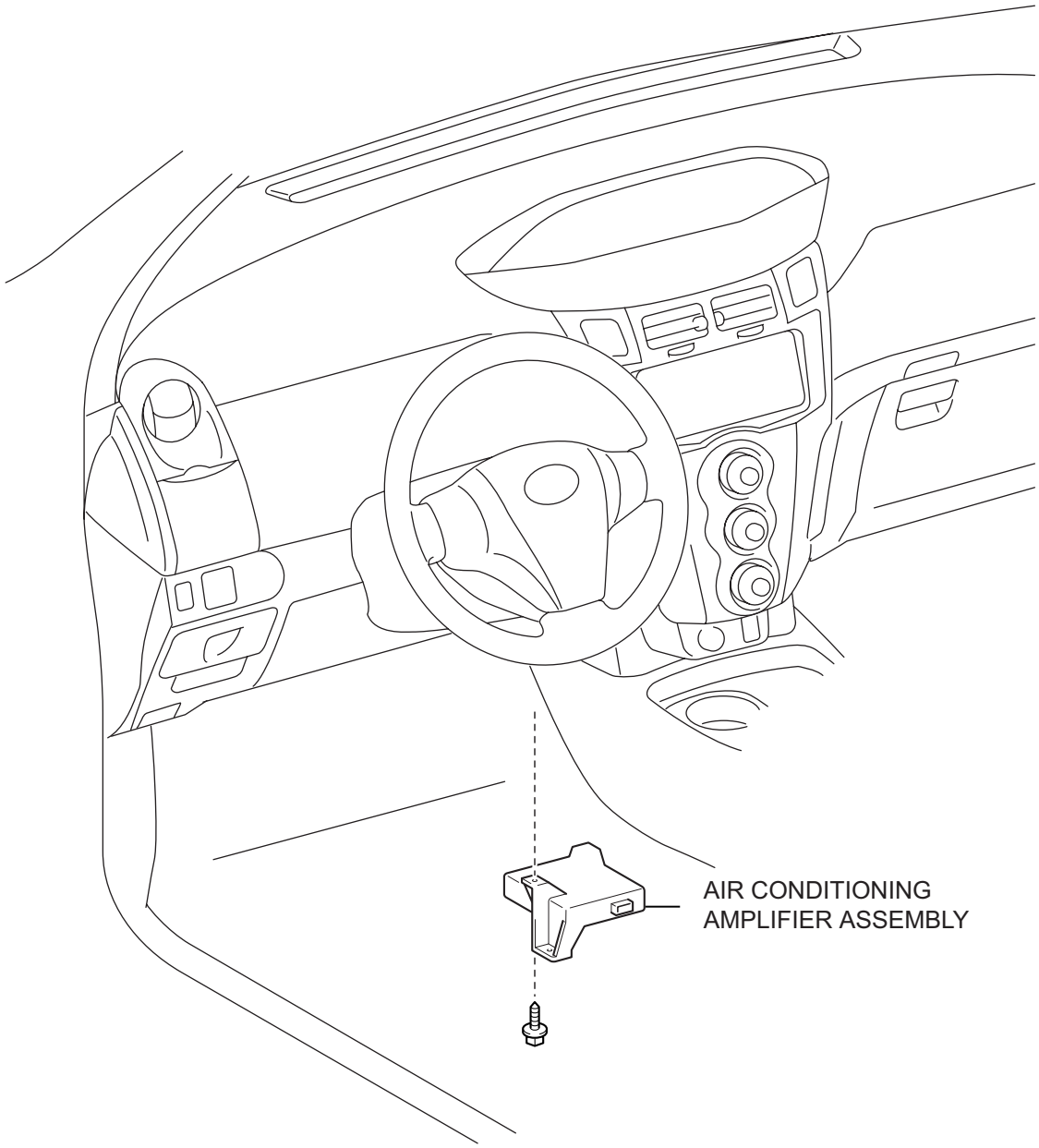

O

I101558E01

REMOVAL

1. DISCONNECT CABLE FROM NEGATIVE BATTERY TERMINAL

2. REMOVE AIR CONDITIONING AMPLIFIER ASSEMBLY

(a) Remove the screw.

(b) Disconnect the connector and remove the air conditioning amplifier.

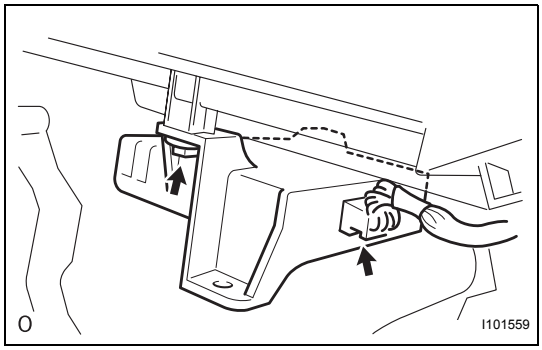

INSTALLATION

1. INSTALL AIR CONDITIONING AMPLIFIER ASSEMBLY

(a) Connect the connector.

(b) Install the air conditioning amplifier with the screw.

2. CONNECT CABLE TO NEGATIVE BATTERY TERMINAL
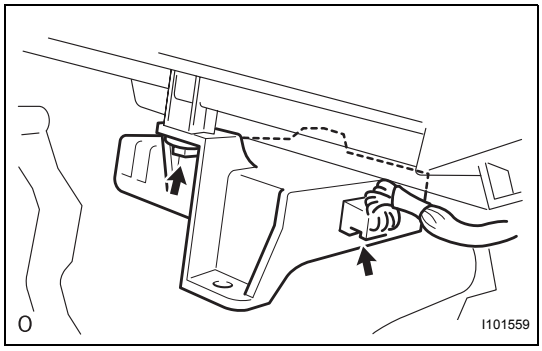
Torque: 5.4 N*m (55 kgf*cm, 48 in.*lbf)