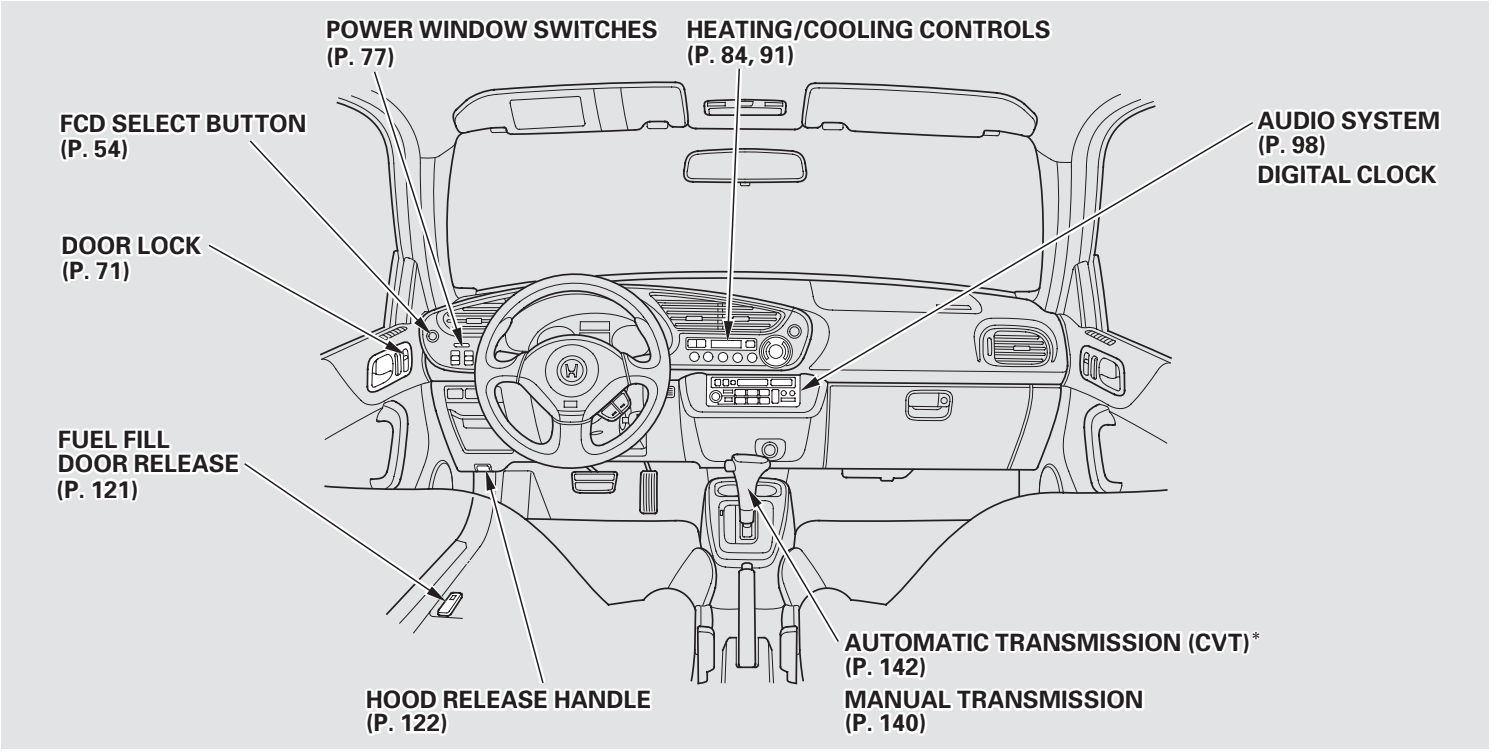
POWER WINDOW SWITCHES
(P. 77)
HEATING/COOLING CONTROLS
(P. 84, 91)
FCD SELECT BUTTON
(P. 54)
AUDIO SYSTEM
(P. 98)
DIGITAL CLOCK
DOOR LOCK
(P. 71)
FUEL FILL
DOOR RELEASE
(P. 121)
AUTOMATIC TRANSMISSION (CVT)*
(P. 142)
HOOD RELEASE HANDLE
(P. 122)
MANUAL TRANSMISSION
(P. 140)

* U.S. model

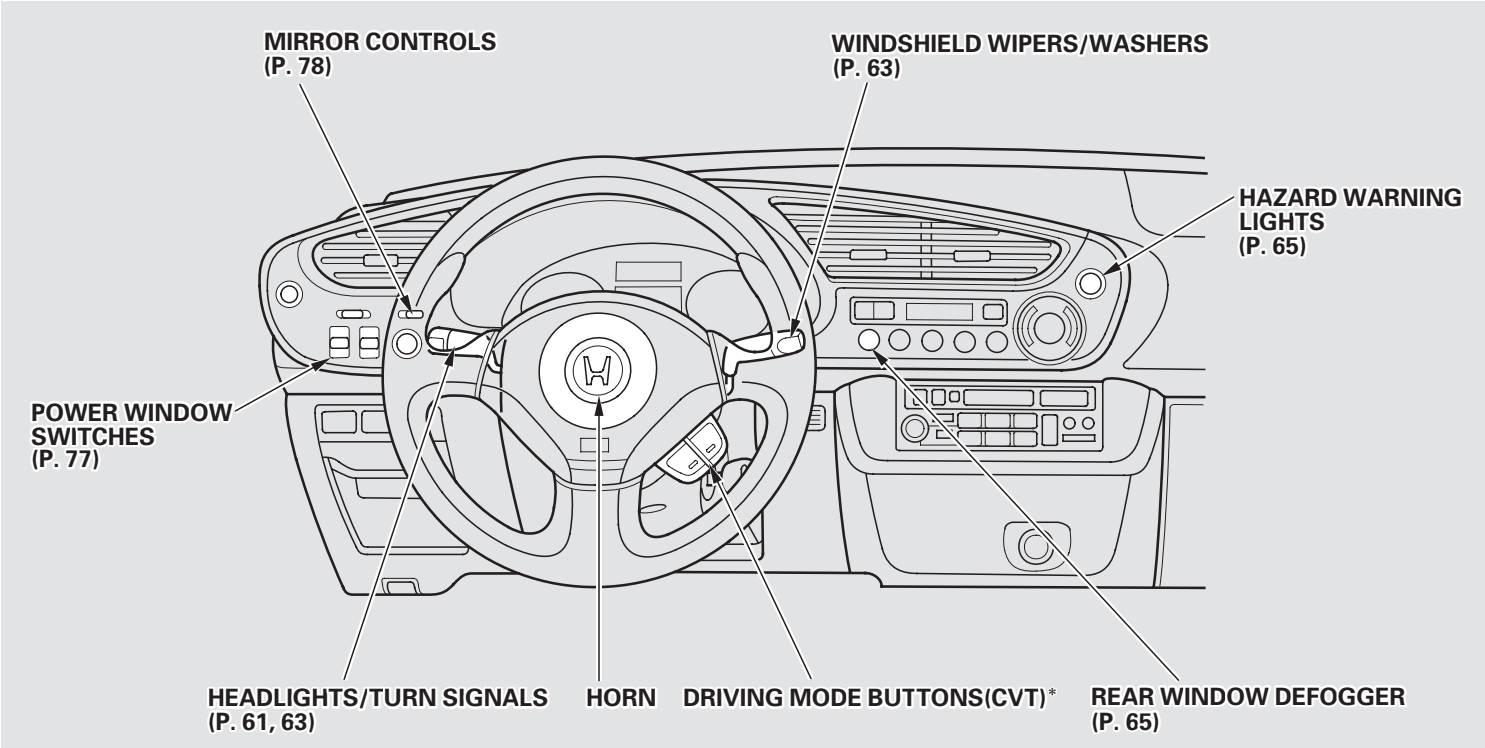
MIRROR CONTROLS
(P. 78)
WINDSHIELD WIPERS/WASHERS
(P. 63)
HAZARD WARNING
LIGHTS
(P. 65)
POWER WINDOW
SWITCHES
(P. 77)
HEADLIGHTS/TURN SIGNALS
(P. 61, 63)
HORN
DRIVING MODE BUTTONS(CVT)*
REAR WINDOW DEFOGGER
(P. 65)

* U.S. model

This section gives you important information about how to protect yourself and your passenger. It shows you how to use seat belts properly. It explains your Supplemental Restraint System. And it tells you how to properly restrain children in your car.

Important Safety Precautions 6
Your Car's Safety Features 7
Seat Belts 8
Airbags 9
Seats & Seat-Backs 10
Head Restraints 10
Door Locks 10
Pre-Drive Safety Checklist 11
Protecting Adults 12
1. Close and Lock the Doors 12
2. Adjust the Front Seats 12
3. Adjust the Seat-Backs 13
4. Fasten and Position the Seat Belts 15
5. Maintain a Proper Sitting Position 16
Advice for Pregnant Women 17
Additional Safety Precautions 18
Protecting Children 19
All Children Must Be Restrained 19
Your Car is Not Recommended for Child Passengers 20
The Passenger's Airbag Poses Serious Risks to Children 20
Additional Safety Precaution 22
General Guidelines for Using Child Seats 22
Protecting Small Children 26
Protecting Larger Children 29
Using Child Seats with Tethers 33
Additional Information About Your Seat Belts 34
Seat Belt System Components 34
Lap/Shoulder Belt 34
Seat Belt Maintenance 35
Additional Information About Your SRS 36
SRS Components 36
How Your Airbags Work 36
How the Automatic Seat Belt Tensioners Work 38
How the SRS Indicator Light Works 38
SRS Service 39
Additional Safety Precautions 39
Carbon Monoxide Hazard 40
Safety Labels 41

Important Safety Precautions

You'll find many safety recommendations throughout this section, and throughout this manual. The recommendations on this page are the ones we consider to be the most important.

Always Wear Your Seat Belt
A seat belt is your best protection in all types of collisions. Airbags supplement seat belts, but airbags are designed to inflate only in a moderate to severe frontal collision. So even though your car is equipped with airbags, make sure you and your passenger always wear your seat belts, and wear them properly. (See page 15).

Your Car is Not Recommended for Child Passengers
Since all children are safest in the back seat of a car, and your car does not have a back seat, we recommend that you do not carry a child passenger. ***Due to the passenger's airbag hazard, you should never carry an infant in a rear-facing child seat in this car.*** If a small child who must be restrained in a forward-facing child seat, or a larger child, must ride in this car, be sure to follow all instructions and safety warnings in this manual. (See pages 26 and 29.)

Be Aware of Airbag Hazards
While airbags can save lives, they can cause serious or fatal injuries to occupants who sit too close to them, or are not properly restrained. Infants, young children, and short adults are at the greatest risk. Be sure to follow all instructions and warnings in this manual. (See page 7.)

Don't Drink and Drive
Alcohol and driving don't mix. Even one drink can reduce your ability to respond to changing conditions, and your reaction time gets worse with every additional drink. So don't drink and drive, and don't let your friends drink and drive, either.

Control Your Speed
Excessive speed is a major factor in crash injuries and deaths. Generally, the higher the speed the greater the risk, but serious accidents can also occur at lower speeds. Never drive faster than is safe for current conditions, regardless of the maximum speed posted.

Keep Your Car in Safe Condition
Having a tire blowout or a mechanical failure can be extremely hazardous. To reduce the possibility of such problems, check your tire pressures and condition frequently, and perform all regularly scheduled maintenance. (See page 158.)

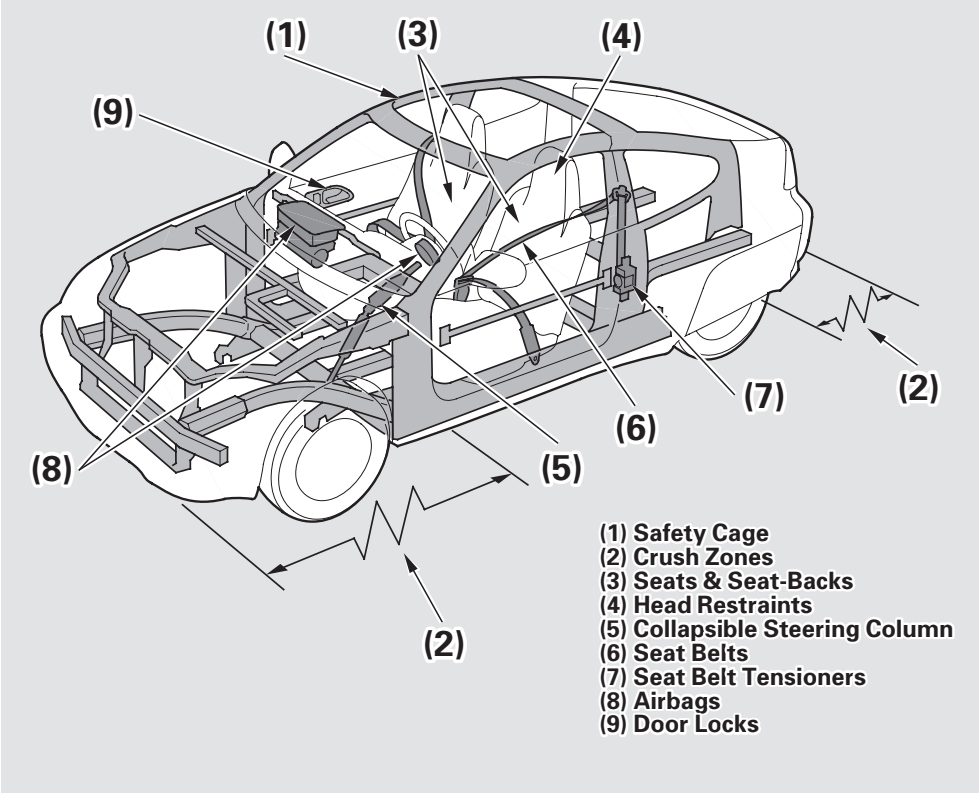

Your car is equipped with many features that work together to protect you and your passenger during a crash.

Some safety features do not require any action on your part. These include a strong aluminum framework that forms a safety cage around the passenger compartment; front and rear crush zones that are designed to crumple and absorb energy during a crash; a collapsible steering column; and seat belt tensioners that automatically tighten the seat belts in the event of a crash. These safety features are designed to reduce the severity of injuries in a crash. However, you and your passenger can't take full advantage of these safety features unless you remain sitting in a proper position and ***always wear your seat belts properly.*** In fact, some safety features can contribute to injuries if they are not used properly.

Seat Belts

For your safety, and the safety of your passenger, your car is equipped with seat belts in both seating positions.

Your seat belt system also includes a light on the instrument panel to remind you and your passenger to fasten your seat belts.

Why Wear Seat Belts

Seat belts have proven to be the single most effective safety device.

Not wearing a seat belt properly increases the chance of serious injury or death in a crash, even though your car has airbags.

In addition, most states and all Canadian provinces require you to wear seat belts.

⚠WARNING

Not wearing a seat belt properly increases the chance of serious injury or death in a crash, even if you have airbags.

Be sure you and your passenger always wear seat belts and wear them properly.

When properly worn, seat belts:

- Keep you connected to the vehicle so you can take advantage of the car's built-in safety features.
- Help protect you in almost every type of crash, including side and rear impacts and rollovers. (Your airbag can only be helpful in a moderate to severe frontal collision.)
- Help keep you from being thrown against the inside of the vehicle and against other occupants.
- Keep you from being thrown out of the vehicle.
- Help keep you in a good position should the airbags ever deploy. A good position reduces the risk of injury from an inflating airbag, and allows you to get the best advantage from the airbag.

Of course, seat belts cannot completely protect you in every crash. But in most cases, seat belts can reduce your risk of serious injury.

What you should do: Always wear your seat belt, and make sure you wear it properly.

Airbags

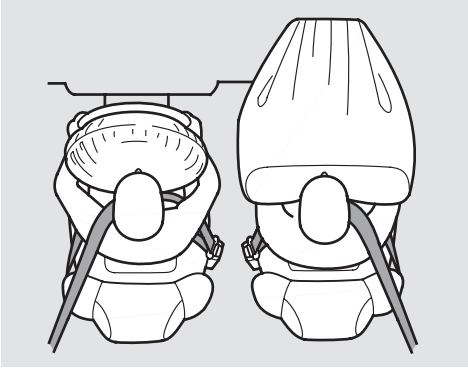

Your car has a Supplemental Restraint System (SRS) with frontal airbags to help protect the driver and a passenger.

SRS This system also includes an indicator light on the instrument panel to alert you to a possible problem with the system.

The most important things you need to know about your airbags are:

- ***Airbags do not replace seat belts.*** The seat belts are the occupants' primary protection in all types of collisions. Airbags supplement seat belts by providing extra protection for occupants' heads and chests.

- ***Airbags offer no protection in side impacts, rear impacts, rollovers, or minor collisions.*** Airbags are designed to deploy only during a moderate to severe frontal collision.

- ***Airbags can pose serious hazards.*** To do their job, airbags must inflate with tremendous force and speed. So while airbags save lives, they can cause serious injuries to adults and larger children who are not wearing seat belts, are not wearing them properly, are sitting too close to the airbag, or are not sitting in a proper position. Infants and small children are at an even greater risk of injury or death.

What you should do: Always wear your seat belt properly, and sit upright and as far back as possible from the steering wheel or dashboard.

Seats & Seat-Backs

Your car's seats are designed to keep you in a comfortable, upright position so you can take full advantage of the protection offered by seat belts and the energy absorbing materials in the seats.

How you adjust your seats and seat-backs can also affect your safety. For example, sitting too close to the steering wheel or dashboard increases the risk of you or your passenger being injured by striking the inside of the car, or by an inflating airbag.

Reclining a seat-back too far reduces the seat belt's effectiveness and increases the chance that the seat's occupant will slide under the seat belt in a crash and be seriously injured.

What you should do: Move the seats as far back as possible, and keep adjustable seat-backs in an upright position whenever the car is moving.

Head Restraints

Head restraints can help protect you from whiplash and other injuries.

Door Locks

Keeping your doors locked reduces the chance of being thrown out of the car during a crash. It also helps prevent occupants from accidentally opening a door and falling out, and outsiders from unexpectedly opening your doors.

Pre-Drive Safety Checklist
To make sure you and your passenger get the maximum protection from your car's safety features, check the following each time before you drive away:

- You and any adult passenger, or a larger child who has outgrown child seats, are wearing your seat belts and wearing them properly (see page 15).
- A small child riding in a forward-facing child seat is properly restrained (see page 26).
- Occupants are sitting upright and as far back as possible from the steering wheel and dashboard (see page 12).
- Seat-backs are upright (see page 13).
- Both doors are closed and locked (see page 12).
- All cargo is properly stored or secured (see page 130).

The rest of this section gives more detailed information about how you can maximize your safety.

Remember, however, that no safety system can prevent all injuries or deaths that can occur in severe crashes, even when seat belts are properly worn and the airbags deploy.

Protecting Adults

Introduction
The following pages provide instructions on how to properly protect adult occupants.

These instructions also apply to a child whom you have decided is large enough and mature enough to ride as a passenger. (See page 29 for important additional guidelines on how to properly protect larger children.)

1.Close and Lock the Doors
After everyone has entered the car, be sure the doors are closed and locked.

Your car has a door monitor light on the instrument panel to indicate when a specific door is not tightly closed.

For safety, locking the doors reduces the chance that a passenger, especially a child, will open a door while the car is moving and accidentally fall out. It also reduces the chance of someone being thrown out of the car during a crash.

For security, locked doors can prevent an outsider from unexpectedly opening a door when you come to a stop.

See page 71 for how to lock the doors.

2.Adjust the Front Seats

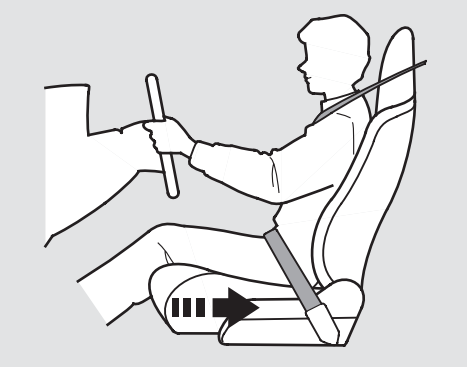

Any driver who sits too close to the steering wheel is at risk of being seriously injured or killed by striking the steering wheel, or from being struck by an inflating airbag during a crash.

To reduce the chance of injury, wear your seat belt properly, sit upright with your back against the seat, and move the seat as far back as possible from the steering wheel while still maintaining full control of the car. Also make sure your passenger moves the seat as far to the rear as possible.

⚠WARNING

Sitting too close to an airbag can result in serious injury or death if the airbags inflate.

Always sit as far back from the airbags as possible.

Most shorter drivers can get far enough away from the steering wheel and still reach the pedals. However, if you are concerned about sitting too close, we recommend that you investigate whether some type of adaptive equipment may help.

Once your seat is adjusted correctly, rock it back and forth to make sure the seat is locked in position.

See page 76 for how to adjust the seats.

3.Adjust the Seat-Backs

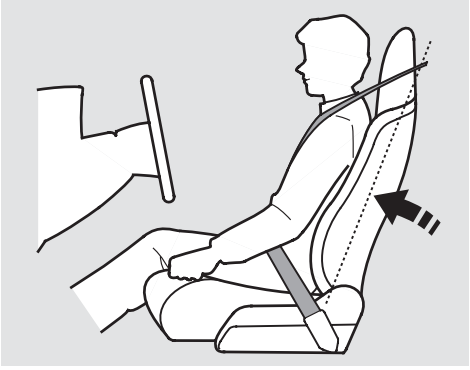

Adjust the driver's seat-back to a comfortable, upright position, leaving ample space between your chest and the airbag cover in the center of the steering wheel. If you sit too close to the steering wheel, you could be injured if the airbag inflates.

CONTINUED

A passenger should also adjust the seat-back to an upright position, but as far from the dashboard as possible. A passenger who sits too close to the dashboard could be injured if the airbag inflates.

Reclining a seat-back so that the shoulder part of the belt no longer rests against the occupant's chest reduces the protective capability of the belt. It also increases the chance of sliding under the belt in a crash and being seriously injured. The farther a seat-back is reclined, the greater the risk of injury.

⚠ WARNING

Reclining the seat-back too far can result in serious injury or death in a crash.

Adjust the seat-back to an upright position and sit well back in the seat.

See page 76 for how to adjust seat-backs.

4. Fasten and Position the Seat Belts

Insert the latch plate into the buckle, then tug on the belt to make sure the belt is securely latched. Also check that the belt is not twisted, because a twisted belt can cause serious injuries in a crash.

Position the lap part of the belt as low as possible across your hips, then pull up on the shoulder part of the belt so the lap part fits snugly. This lets your strong pelvic bones take the force of a crash and reduces the chance of internal injuries.

If necessary, pull up on the belt again to remove any slack from the shoulder part, then check that the belt rests across the center of your chest and over your shoulder. This spreads the forces of a crash over the strongest bones in your upper body.

⚠ WARNING

Improperly positioning the seat belts can cause serious injury or death in a crash.

Make sure all seat belts are properly positioned before driving.

Never place the shoulder portion of a lap/shoulder belt under your arm or behind your back. This could cause very serious injuries in a crash.

CONTINUED

If a seat belt does not seem to work as it should, it may not protect the occupant in a crash. ***No one should sit in a seat with an inoperative seat belt.*** Anyone using a seat belt that is not working properly can be seriously injured or killed. Have your Honda dealer check the belt as soon as possible.

See page 34 for additional information about your seat belt system and how to take care of your belts.

5. Maintain a Proper Sitting Position

After occupants have adjusted their seats and put on seat belts, it is very important that they continue to sit upright, well back in their seats, with their feet on the floor, until the car is parked and the engine is off.

Sitting improperly can increase the chance of injury during a crash. For example, if an occupant slouches, lies down, turns sideways, sits forward, leans forward or sideways, or puts one or both feet up, the chance of injury during a crash is greatly increased.

In addition, an occupant who is out of position can be seriously or fatally injured by striking interior parts of the car, or by being struck by an inflating airbag.

⚠ WARNING

Sitting improperly or out of position can result in serious injury or death in a crash.

Always sit upright, well back in the seat, with your feet on the floor.

Remember, to get the best protection from your car's airbags and other safety features, you must sit properly and wear your seat belt properly.

Advice for Pregnant Women

Because protecting the mother is the best way to protect her unborn child, a pregnant woman should always wear a seat belt whenever she drives or rides in a vehicle.

Remember to keep the lap portion of the belt as low as possible across your hips.

Pregnant women should also sit upright and as far back as possible from the steering wheel or dashboard. This will reduce the risk of injuries to both the mother and her unborn child that can be caused by a crash or an inflating airbag.

Each time you have a check-up, ask your doctor if it's okay for you to drive.

Additional Safety Precautions

- ***Two people should never use the same seat belt.*** If they do, they could be very seriously injured in a crash.

- ***Do not put any accessories on seat belts.*** Devices intended to improve occupant comfort or reposition the shoulder part of a seat belt can severely compromise the protective capability of the seat belt and increase the chance of serious injury in a crash.

- ***Do not place hard or sharp objects between yourself and an airbag.*** Carrying hard or sharp objects on your lap, or driving with a pipe or other sharp object in your mouth, can result in injuries if your airbags inflate.

- ***Do not attach or place objects on the front airbag covers.*** Any object attached to or placed on the covers marked "SRS AIRBAG" in the center of the steering wheel and on top of the dashboard could interfere with the proper operation of the airbags. Or, if the airbags inflate, the objects could be propelled inside the car and hurt someone.

- ***Keep your hands and arms away from the airbag covers.*** If your hands or arms are close to the airbag covers in the center of the steering wheel and on top of the dashboard, they could be injured if the airbags inflate.

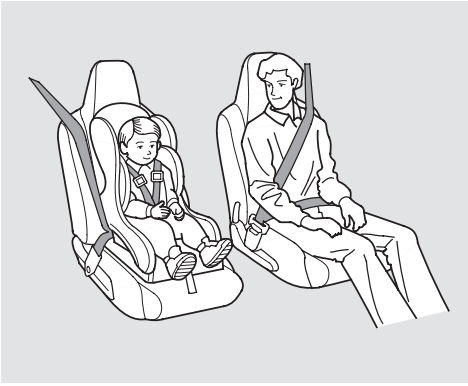

Children depend on adults to protect them. However, despite their best intentions, many parents and other adults may not know how to *properly* protect young passengers.

So if you have children, or if you ever need to drive with a grandchild or other children in your car, be sure to read this section.

⚠WARNING

Children who are unrestrained or improperly restrained can be seriously injured or killed in a crash.

Any child too small for a seat belt should be properly restrained in a child seat. A larger child should be properly restrained with a seat belt.

All Children Must Be Restrained

Each year, many children are injured or killed in vehicle crashes because they are either unrestrained or not properly restrained. In fact, vehicle accidents are the number one cause of death of children ages 12 and under.

To reduce the number of child deaths and injuries, every state and Canadian province requires that infants and children be restrained whenever they ride in a vehicle.

Any child who is too small to wear a seat belt should be properly restrained in a child seat. (See page 26 .)

A larger child should always be restrained with a seat belt. (See page 29 .)

Your Car is Not Recommended for Child Passengers
We strongly recommend that you do not carry any child in this car.
One reason is that your car does not have a back seat, and accident statistics show that a child of any size or age is safer when they are properly restrained in the back seat of a vehicle.

In addition, your car has a passenger's airbag which poses serious risks to children—particularly infants and small children.

The Passenger's Airbag Poses Serious Risks to Children
Airbags have been designed to help protect adults in a moderate to severe frontal collision. To do this, the passenger's airbag is quite large, and it inflates with tremendous speed.

As a result, we urge you to follow these guidelines.

Infants
Never put a rear-facing child seat in the front seat of a car equipped with a passenger's airbag. If the airbag inflates, it can hit the back of the child seat with enough force to kill or very seriously injure an infant.

Small Children
Placing a forward-facing child seat in the front seat of a car equipped with a passenger's airbag can be hazardous. If the vehicle seat is too far forward, or the child's head is thrown forward during a collision, an inflating airbag can strike the child with enough force to kill or very seriously injure a small child. If a small child must ride in this car, follow the instructions on page 23 .

Larger Children
Children who have outgrown child seats are also at risk of being injured or killed by an inflating passenger's airbag. If a larger child must ride in this car, see page 29 for important guidelines on how to decide whether a child is large enough and mature enough to ride as a passenger, and how to properly protect the child.

U.S. Models

To remind you of the passenger's airbag hazards, your car has warning labels hanging from the glove box and on the driver's and passenger's visors. Please read and follow the instructions on these labels.

⚠ WARNING

DEATH or SERIOUS INJURY can occur

- Children 12 and under can be killed by the air bag
- NEVER put a rear-facing child seat in the front
- Sit as far back as possible from the air bag
- ALWAYS use SEAT BELTS and CHILD RESTRAINTS

⚠ WARNING

Children Can Be KILLED or INJURED by Passenger Air Bag

- Make sure all children use seat belts or child seats.

To be removed by owner only.

Canadian Models

To remind you of the airbag hazards, your car has warning labels on the driver's and passenger's visors. Please read and follow the instructions on these labels.

CAUTION

TO AVOID SERIOUS INJURY:

- FOR MAXIMUM SAFETY PROTECTION IN ALL TYPES OF CRASHES, YOU MUST ALWAYS WEAR YOUR SAFETY BELT.
- DO NOT INSTALL REARWARD-FACING CHILD SEATS IN ANY FRONT PASSENGER SEAT POSITION.
- DO NOT SIT OR LEAN UNNECESSARILY CLOSE TO THE AIR BAG.
- DO NOT PLACE ANY OBJECTS OVER THE AIR BAG OR BETWEEN THE AIR BAG AND YOURSELF.
- SEE THE OWNER'S MANUAL FOR FURTHER INFORMATION AND EXPLANATIONS.

PRÉCAUTION:

POUR EVITER DES BLESSURES GRAVES:

- POUR PROFITER D'UNE PROTECTION MAXIMALE LORS D'UNE COLLISION BOUCLEZ TOUJOURS VOTRE CEINTURE DE SECURITE.
- N'INSTALLEZ JAMAIS UN SIEGE POUR ENFANTS FAISANT FACE A L'ARRIERE SUR LE SIEGE DU PASSAGER AVANT.
- NE VOUS APPUYEZ PAS ET NE VOUS ASSEYEZ PAS PRES DU COUSSIN GONFLABLE.
- NE DEPOSEZ AUCUN OBJET SUR LE COUSSIN GONFLABLE OU ENTRE LE COUSSIN GONFLABLE ET VOUS.
- LISEZ LE GUIDE UTILISATEUR POUR DE PLUS AMPLES RENSEIGNEMENTS.

Additional Safety Precaution

- ***Do not leave a child alone in your car.*** Leaving a child without adult supervision is illegal in most states and Canadian provinces and can be very hazardous. For example, a small child left in a car on a hot day can die from heatstroke. A child left alone with the key in the ignition can accidentally set the car in motion, possibly injuring themselves or others.

General Guidelines for Using Child Seats

As discussed on page 20, because your car does not have a back seat, and because of the passenger's airbag hazard, we strongly recommend that you do not carry a small child as a passenger in this car.

However, if you must carry a small child in this car, the child must be properly restrained in a child seat.

The following pages give general guidelines for selecting and installing a child seat. See page 26 for additional information.

Selecting a Child Seat

To provide proper protection, a child seat should meet three requirements:

1. ***The child seat should meet safety standards.*** The child seat should meet Federal Motor Vehicle Safety Standard 213 (FMVSS 213) or Canadian Motor Vehicle Safety Standard 213 (CMVSS 213). Look for the manufacturer's statement of compliance on the box and seat.

2. The child seat should be of the proper type and size to fit the child.

Small Children: A child who can sit up without support should be restrained in a forward-facing child seat. See page 26 for additional information on protecting small children.

3. The child seat should fit the passenger's seat.

Due to variations in the design of child seats, vehicle seats, and seat belts, all child seats will not fit all seating positions in all cars.

However, Honda is confident that one or more child seat models can fit and be properly installed in this car.

Before purchasing a child seat, we recommend that parents test the child seat to make sure it fits properly in the passenger's seat. If a previously purchased child seat does not fit, you will need to buy a different one that will fit.

CONTINUED

Placing a Child Seat
This page briefly summarizes Honda's recommendations on where to place a child seat in your car.

Airbags Pose Serious Risks to Children

The passenger's airbag inflates with enough force to kill or seriously injure an infant in a rear-facing child seat.

A small child in a forward-facing child seat is also at risk. If the vehicle seat is too far forward, or the child's head is thrown forward during a collision, an inflating airbag can kill or seriously injure the child.

If a small child must ride in this car, follow the instructions provided in this section.

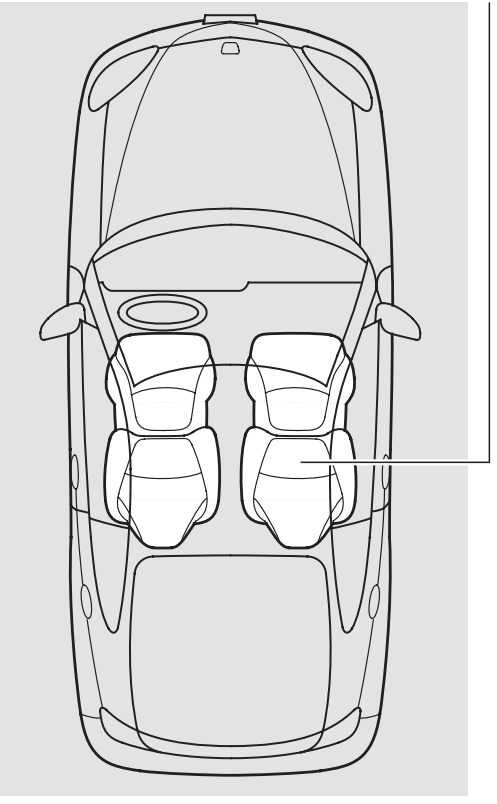

Passenger's Seat

Infants: Never in the passenger's seat, due to the passenger's airbag hazard.

Small children: Not recommended, due to the passenger's airbag hazard. If a small child must ride in this car, move the vehicle seat to the rear-most position and secure a front-facing child seat with the seat belt. (see page 27).

Installing a Child Seat
After selecting a proper child seat, there are three main steps in installing the seat:

1. ***Secure the child seat to the car with a seat belt.*** All child seats must be secured to the car with the lap part of a lap/shoulder belt. A child whose seat is not properly secured to the car can be endangered in a crash. See page 27 for instructions on how to secure a forward-facing child seat in this car.

2. ***Make sure the child seat is firmly secured.*** After installing a child seat, push and pull the seat forward and from side to side to verify that it is secure.

To provide security during normal driving maneuvers as well as during a collision, we recommend that parents secure a child seat as firmly as possible.

However, a child seat does not need to be "rock solid." It may be difficult to install a child seat so that it does not move at all. Some side-to-side or back-and-forth movement can be expected and should not reduce the child seat's effectiveness.

3. ***Secure the child in the child seat.*** Make sure the child is properly strapped in the child seat according to the child seat maker's instructions. A child who is not properly secured in a child seat can be thrown out of the seat in a crash and be seriously injured.

Storing a Child Seat
When you are not using a child seat, either remove it and store it in a safe place, or make sure it is properly secured. An unsecured child seat can be thrown around the car during a crash or sudden stop and injure someone.

Protecting Small Children

The passenger's airbag poses serious risks to small children. If the vehicle seat is too far forward, or the child's head is thrown forward during a collision, or the child is unrestrained or improperly restrained, an inflating airbag can kill or seriously injure the child.

For these reasons, we recommend that you do not carry a small child as a passenger.

If you decide to carry a small child in this car, follow the instructions and guidelines below.

Child Seat Type
A child who can sit up without support, and who fits within the child seat maker's weight and height limits, should be restrained in a forward-facing, upright child seat.

Of the different seats available, we recommend those that have a five-point harness system as shown.

We also recommend that a small child stay in the child seat as long as possible, until the child reaches the weight or height limit for the seat.

⚠ WARNING

Improperly placing a forward-facing child seat in the front seat can result in serious injury or death if the airbags inflate.

If you must place a forward-facing child seat in front, move the vehicle seat as far back as possible and properly restrain the child.

Child Seat Installation

The passenger's seat belt has a locking mechanism that must be activated to secure a child seat.

The following pages provide instructions and tips on how to secure a forward-facing child seat with this type of seat belt.

1. Move the vehicle seat to the rear-most position. Moving the seat as far back as possible reduces the chance of a child being injured or killed if the passenger's airbag inflates. (See page 76 for instructions on how to adjust the seat.)

2. With the child seat in position, route the belt through the child seat according to the seat maker's instructions, then insert the latch plate into the buckle.

3. To activate the lockable retractor, slowly pull the shoulder part of the belt all the way out until it stops, then let the belt feed back into the retractor (you might hear a clicking noise as the belt retracts).

4. After the belt has retracted, tug on it. If the belt is locked, you will not be able to pull it out. If you can pull the belt out, it is not locked and you will need to repeat these steps.

CONTINUED

5. After confirming that the belt is locked, grab the shoulder part of the belt near the buckle and pull up to remove any slack from the lap part of the belt. Remember, if the lap part of the belt is not tight, the child seat will not be secure. It may help to put weight on the child seat, or push on the back of the seat, while pulling up on the belt.

6. Push and pull the child seat forward and from side to side to verify that it is secure enough to stay upright during normal driving maneuvers. If the child seat is not secure, unlatch the belt, allow it to retract fully, then repeat these steps.

To deactivate the locking mechanism in order to remove a child seat, unlatch the buckle, unroute the seat belt, and let the belt fully retract.

Additional Precautions for Small Children

- ***Never hold a small child on your lap.*** If you are not wearing a seat belt in a crash, you could be thrown forward into the dashboard and crush the child.

  If you are wearing a seat belt, the child can be torn from your arms during a crash. For example, if your car crashes into a parked vehicle at 30 mph (48 km/h), a 30-lb (14 kg) child will become a 900-lb (410 kg) force, and you will not be able to hold on.

- ***Never put a seat belt over yourself and a child.*** During a crash, the belt could press deep into the child and cause very serious injuries.

Protecting Larger Children
The passenger's airbag poses serious risks to children, including those who have outgrown child seats. If the vehicle seat is too far forward, or the child's head is thrown forward during a collision, or the child is unrestrained or out of position, an inflating airbag can kill or seriously injure the child.

For these reasons, we recommend that you do not carry a child passenger.

With this in mind, following are some guidelines to help you decide when a given child may ride in your car.

The Child Should Wear a Seat Belt
When a child reaches the recommended weight or height limit for a forward-facing child seat, the child should wear a lap/shoulder belt.

If a child is too short for the shoulder part of the belt to properly fit, we recommend that the child use a booster seat until the child is tall enough to use the seat belt without a booster.

The following pages give instructions on how to check proper seat belt fit, what kind of booster seat to use if one is needed, and important precautions for a child who must ride in this car.

⚠ WARNING

Allowing a larger child to sit improperly in the front seat can result in injury or death if the airbags inflate.

If a larger child must sit in front, make sure the child moves the seat as far back as possible and wears the seat belt properly.

Checking Seat Belt Fit

To determine if a lap/shoulder belt properly fits a child, have the child put on the seat belt. Follow the instructions on page 15 . Then check how the belt fits.

If the shoulder part of the belt rests over the child's collarbone and against the center of the chest, as shown, the child is large enough to wear the seat belt.

CONTINUED

However, if the belt touches or crosses the child's neck, the child needs to use a booster seat.

Do not let a child wear a seat belt across the neck. This could result in serious neck injuries during a crash.

Do not let a child put the shoulder part of a seat belt behind the back or under the arm. This could cause very serious injuries during a crash. It also increases the chance that the child will slide under the belt in a crash and be injured.

Do not put any accessories on a seat belt. Devices intended to improve occupant comfort or reposition the shoulder part of a seat belt, severely compromise the protective capability of the seat belt and increase the chance of serious injury in a crash.

Two children should never use the same seat belt. If they do, they could be very seriously injured in a crash.

Using a Booster Seat

If a child needs a booster seat, we recommend choosing a style that allows the child to use the lap/shoulder belt directly, without a shield, as shown.

Whichever style you select, follow the booster seat maker's instructions.

A child may continue using a booster seat until the tops of the ears are even with the top of the seat-back. A child of this height should be tall enough to use the lap/shoulder belt without a booster.

When Can a Larger Child Ride in this Car

Children vary widely. And while age may be one indicator of when a child can safely ride in this car, there are other important factors you should consider.

Physical Size

Physically, a child must be large enough for the lap/shoulder belt to properly fit over the hips, chest, and shoulder (see pages 15 and 29). If the seat belt does not fit properly, the child should use a booster seat.

Maturity

To safely ride in this car, a child must be able to follow the rules, including sitting properly and wearing the seat belt properly throughout a ride.

CONTINUED

If you decide that a child can safely ride in this car, be sure to:

- Carefully read the owner's manual and make sure you understand all seat belt instructions and all safety information.
- Move the vehicle seat to the rear-most position.
- Have the child sit up straight, back against the seat, and feet on or near the floor.
- Check that the child's seat belt is properly positioned and secured.
- Supervise the child. Even a mature child sometimes needs to be reminded to fasten the seat belt or sit properly.

Using Child Seats with Tethers

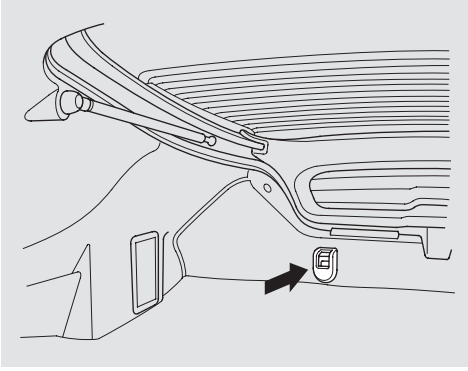

Your car has a tether anchorage point on the trunk lining for securing a tether-style child seat to the car. Since a tether can provide additional security, we recommend using a tether whenever one is required or available.

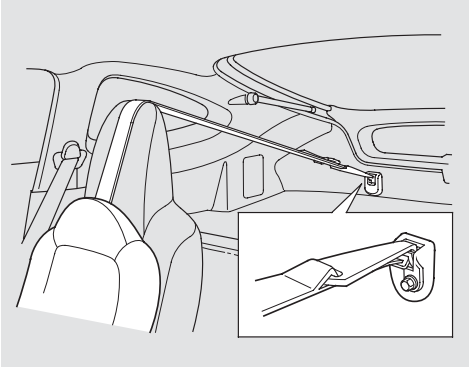

Attach the tether strap hook to the tether anchorage point as shown in the illustration, then tighten the strap according to the child seat maker's instructions.

Additional Information About Your Seat Belts

Seat Belt System Components
Your seat belt system includes lap/shoulder belts in both seating positions.
The seat belts are also equipped with automatic seat belt tensioners.

The system also includes a light on the instrument panel to remind you and your passenger to fasten your belts. If the driver's seat belt is not fastened before the ignition is turned ON (II), the light will come on and a beeper will also sound. The beeper will stop after a few seconds, but the light will stay on until the driver's seat belt is fastened.

Lap/Shoulder Belt

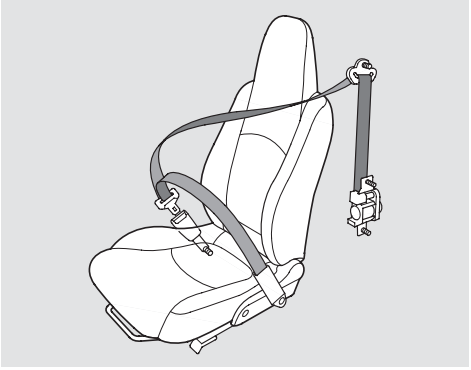

This seat belt has a single belt that goes over your shoulder, across your chest and across your hips.

To fasten the belt, insert the latch plate into the buckle, then tug on the belt to make sure the buckle is latched.

To unlock the belt, push the red PRESS button on the buckle. Guide the belt across your body to the door pillar. After exiting the car, be sure the belt is out of the way and will not get closed in the door.

Both seat belts have an emergency locking retractor. In normal driving, the retractor lets you move freely in your seat while it keeps some tension on the belt.
During a collision or sudden stop, the retractor automatically locks the belt to help restrain your body.

The passenger's seat belt has an additional locking mechanism that must be activated to secure a child seat. (See page 27 for instructions on how to secure a forward-facing child seat with this type of belt.)

If the shoulder part of the belt is pulled all the way out, the locking mechanism will activate. The belt will retract, but it will not allow the passenger to move freely.

To deactivate the locking mechanism, unlatch the buckle and let the seat belt fully retract. To refasten the belt, pull it out only as far as needed.

See page 15 for instructions on how to wear the lap/shoulder belt properly.

Seat Belt Maintenance
For safety, you should check the condition of your seat belts regularly.

Pull each belt out fully and look for frays, cuts, burns, and wear. Check that the latches work smoothly and that the lap/shoulder belts retract easily. Any belt not in good condition or not working properly will not provide good protection and should be replaced as soon as possible.

U.S. Models
Honda provides a lifetime warranty on seat belts. Honda will repair or replace any seat belt component that fails to function properly during normal use. Please see your *Honda Warranty Information* booklet for details.

⚠ WARNING

Not checking or maintaining seat belts can result in serious injury or death if the seat belts do not work properly when needed.

Check your seat belts regularly and have any problem corrected as soon as possible.

If a seat belt is worn during a crash, it must be replaced by the dealer. A belt that has been worn during a crash may not provide the same level of protection in a subsequent crash. The dealer should also inspect the anchors for damage and replace them if needed.

For information on how to clean your seat belts, see page 209 .

Additional Information About Your SRS

SRS Components
Your Supplemental Restraint System (SRS) includes:

- Two front airbags. The driver's airbag is stored in the center of the steering wheel; the front passenger's airbag is stored in the dashboard. Both are marked "SRS AIRBAG."
- Automatic seat belt tensioners that tighten the front seat belts during a moderate to severe frontal collision.
- Sensors that can detect a moderate to severe frontal collision.
- A sophisticated electronic system that continually monitors and records information about the sensors, the control unit, the airbag activators, and driver and passenger seat belt use when the ignition is ON (II).
- An indicator light on the instrument panel that alerts you to a possible problem with the system (see page 38).
- Emergency backup power in case your car's electrical system is disconnected in a crash.

How Your Airbags Work

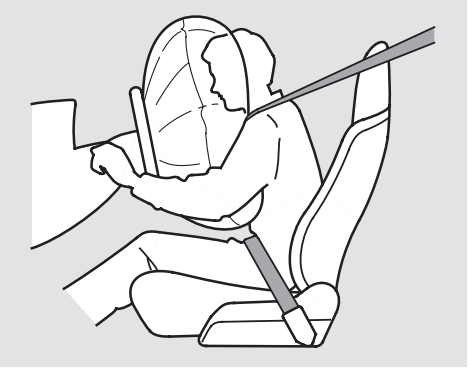

If you ever have a moderate to severe frontal collision, the sensors will detect rapid deceleration and signal the control unit to instantly inflate the airbags and activate the automatic seat belt tensioners.

During a crash, your seat belt helps restrain your lower body and torso, while the tensioner tightens and locks the seat belt to help keep you in place. Your airbag provides a cushion to help restrain and protect your head and chest.

Since both airbags use the same sensors, both airbags normally inflate at the same time. However, it is possible for only one airbag to inflate.

This can occur when the severity of a collision is at the margin, or threshold, that determines whether or not the airbags will deploy. In such cases, the seat belt will provide sufficient protection, and the supplemental protection offered by the airbag would be minimal.

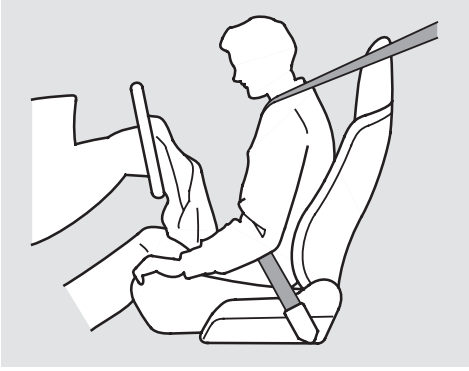

After inflating, the airbags immediately deflate, so they won't interfere with the driver's visibility, or the ability to steer or operate other controls.

The total time for inflation and deflation is approximately one-tenth of a second, so fast that most occupants are not aware that the airbags deployed until they see them lying in their laps.

After a crash, you may see what looks like smoke. This is actually powder from the airbag's surface. Although the powder is not harmful, people with respiratory problems may experience some temporary discomfort. If this occurs, get out of the car as soon as it is safe to do so.

U.S. Owners
For additional information on how your airbags work, see the booklet titled *SRS: What You Need to Know About Airbags* that came with your owner's manual.

Canadian Owners
For additional information on how your airbags work, ask your dealer for a copy of the booklet titled *SRS: What You Need to Know About Airbags*.

How the Automatic Seat Belt Tensioners Work

Your Honda has automatic seat belt tensioners for added protection during a moderate to severe frontal collision.

If your airbags inflate, the tensioners immediately tighten the front seat belts to help hold the occupants in place. The belts will remain tight until you unbuckle them in the normal way.

How the SRS Indicator Light Works

SRS

The purpose of the SRS light is to alert you to a potential problem with your Supplemental Restraint System.

When you turn the ignition ON (II), this indicator will light briefly then go out. This tells you that the system is working properly.

If the light comes on at any other time, or does not come on at all, you should have the system checked by your dealer. For example:

- If the SRS indicator light does not come on after you turn the ignition ON (II).
- If the light stays on after the engine starts.
- If the light comes on or flashes on and off while you drive.

If you see any of these indications, your airbags and seat belt tensioners may not deploy when you need them. See your Honda dealer as soon as possible.

⚠ WARNING

Ignoring the SRS indicator light can result in serious injury or death if the airbags do not inflate when needed.

Have your vehicle checked by a dealer as soon as possible if the SRS light alerts you to a potential problem.

SRS Service
Your Supplemental Restraint System is virtually maintenance-free, and there are no parts you can safely service. However, you must have your car serviced if:

- ***Your airbags ever inflate.*** The airbags, seat belt tensioners, and control unit must be replaced. Do not try to remove or replace the airbags yourself.
  This must be done by a Honda dealer or a knowledgeable body shop.

- ***The SRS indicator light alerts you to a problem.*** Take your car to an authorized Honda dealer as soon as possible. If you ignore this indication, the airbags might not inflate when you need them.

Additional Safety Precautions
- Do not attempt to deactivate your airbags. Together, airbags and seat belts provide the best protection in a moderate to severe frontal collision.

- Do not tamper with SRS components or wiring for any reason. Tampering could cause the airbags to deploy, possibly causing very serious injury.

See page 128 for further information and precautions relating to your SRS.

Carbon Monoxide Hazard

Your car's exhaust contains carbon monoxide gas. You should have no problem with carbon monoxide entering the car in normal driving if you maintain your car properly. Have the exhaust system inspected for leaks whenever:

- The car is raised for an oil change.
- You notice a change in the sound of the exhaust.
- The car was in an accident that may have damaged the underside.

⚠ WARNING

Carbon monoxide gas is toxic. Breathing it can cause unconsciousness and even kill you.

Avoid any enclosed areas or activities that expose you to carbon monoxide.

High levels of carbon monoxide can collect rapidly in enclosed areas, such as a garage. Do not run the engine with the garage door closed. Even with the door open, run the engine only long enough to move the car out of the garage.

With the hatch open, air flow can pull exhaust gas into your car's interior and create a hazardous condition. If you must drive with the hatch open, open all the windows and set the heating and cooling system as shown below.

If you must sit in your parked car, even in an unconfined area, with the engine running, adjust the heating and cooling system as follows:

1. Push the button.
2. Select the mode.
3. Turn the fan on high speed.
4. Set the temperature control to a comfortable setting.

These labels are in the locations shown. They warn you of potential hazards that could cause serious injury. Read these labels carefully.

If a label comes off or becomes hard to read, contact your Honda dealer for a replacement.

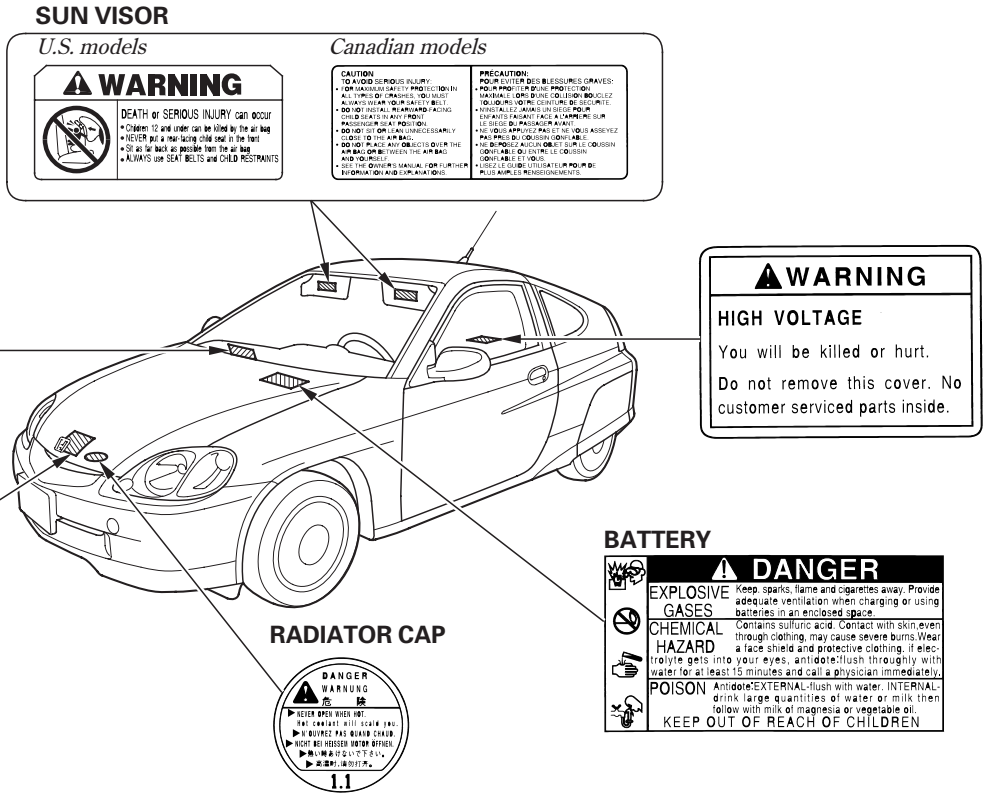

Instruments and Controls

This section gives information about the controls and displays that contribute to the daily operation of your Honda. All the essential controls are within easy reach.

Control Locations 44
Indicator Lights..... 45
Gauges 50
Speedometer 50
Display Change Button..... 50
Odometer..... 50
Current Fuel Mileage..... 53
Trip Meters 53
Trip Mileage..... 54
Segment Distance and Fuel Mileage 54
Lifetime Fuel Mileage..... 55
Turning Off the Mileage Displays..... 55
Battery Level Gauge 56
Charge/Assist Gauge 57
Fuel Gauge 58
Temperature Gauge..... 58
Tachometer 58
Maintenance Required Indicator..... 59
Controls Near the Steering Wheel..... 60
Headlights 61
Daytime Running Lights..... 62
Instrument Panel Brightness..... 62
Turn Signals 63
Windshield Wipers 63
Windshield Washers 64
Rear Window Wiper and Washer..... 65
Hazard Warning..... 65
Rear Window Defogger 65
Keys and Locks..... 67
Keys..... 67
Immobilizer System..... 68
Ignition Switch 69
Door Locks 71
Hatch 71
Remote Transmitter..... 73
Seat Adjustments..... 76
Front Seat Adjustments 76
Power Windows 77
Mirrors..... 78
Parking Brake 79
Storage Box 79
Glove Box 80
Beverage Holder..... 80
Accessory Power Socket 81
Interior Light..... 82

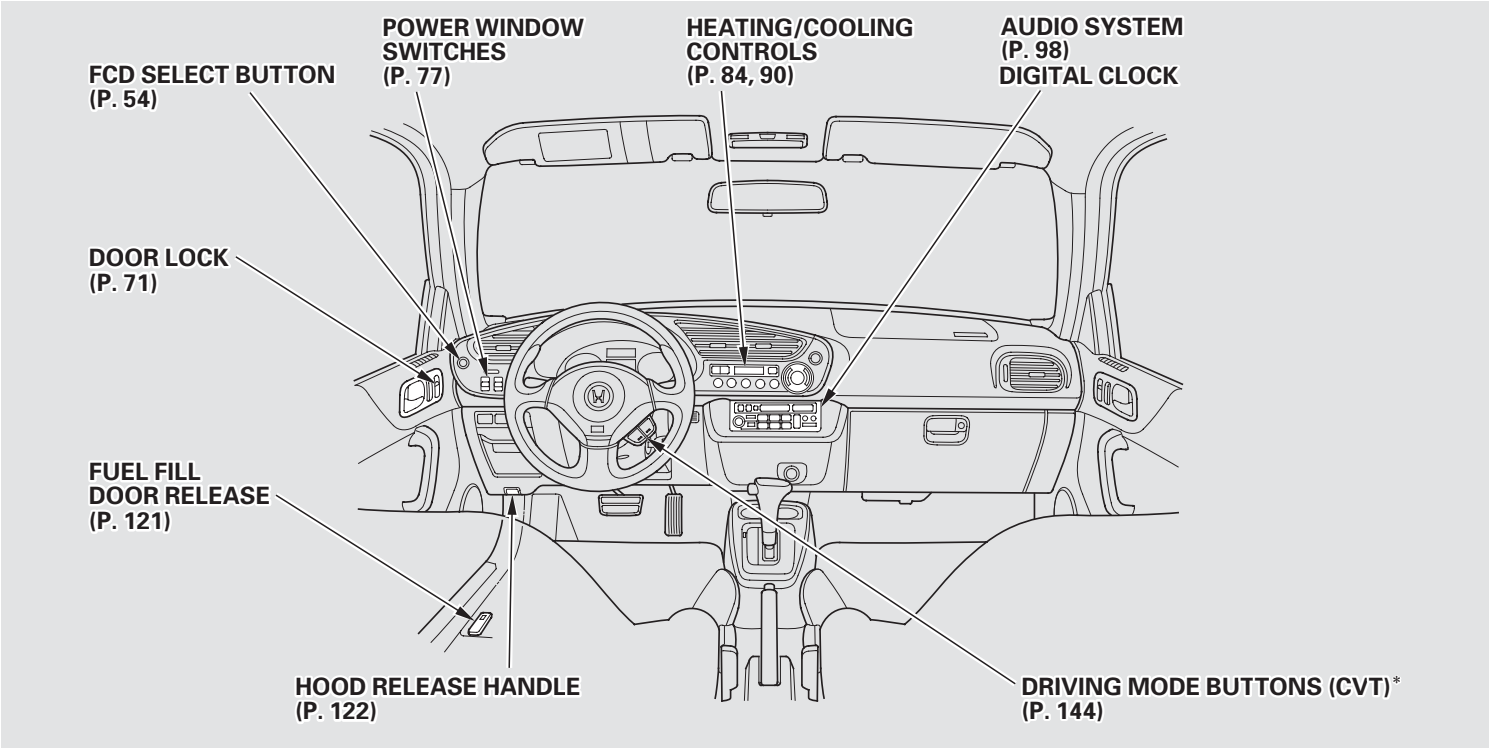
POWER WINDOW SWITCHES (P. 77)
HEATING/COOLING CONTROLS (P. 84, 90)
AUDIO SYSTEM (P. 98)
DIGITAL CLOCK
FCD SELECT BUTTON (P. 54)
DOOR LOCK (P. 71)
FUEL FILL DOOR RELEASE (P. 121)
HOOD RELEASE HANDLE (P. 122)
DRIVING MODE BUTTONS (CVT)* (P. 144)

* U.S. model

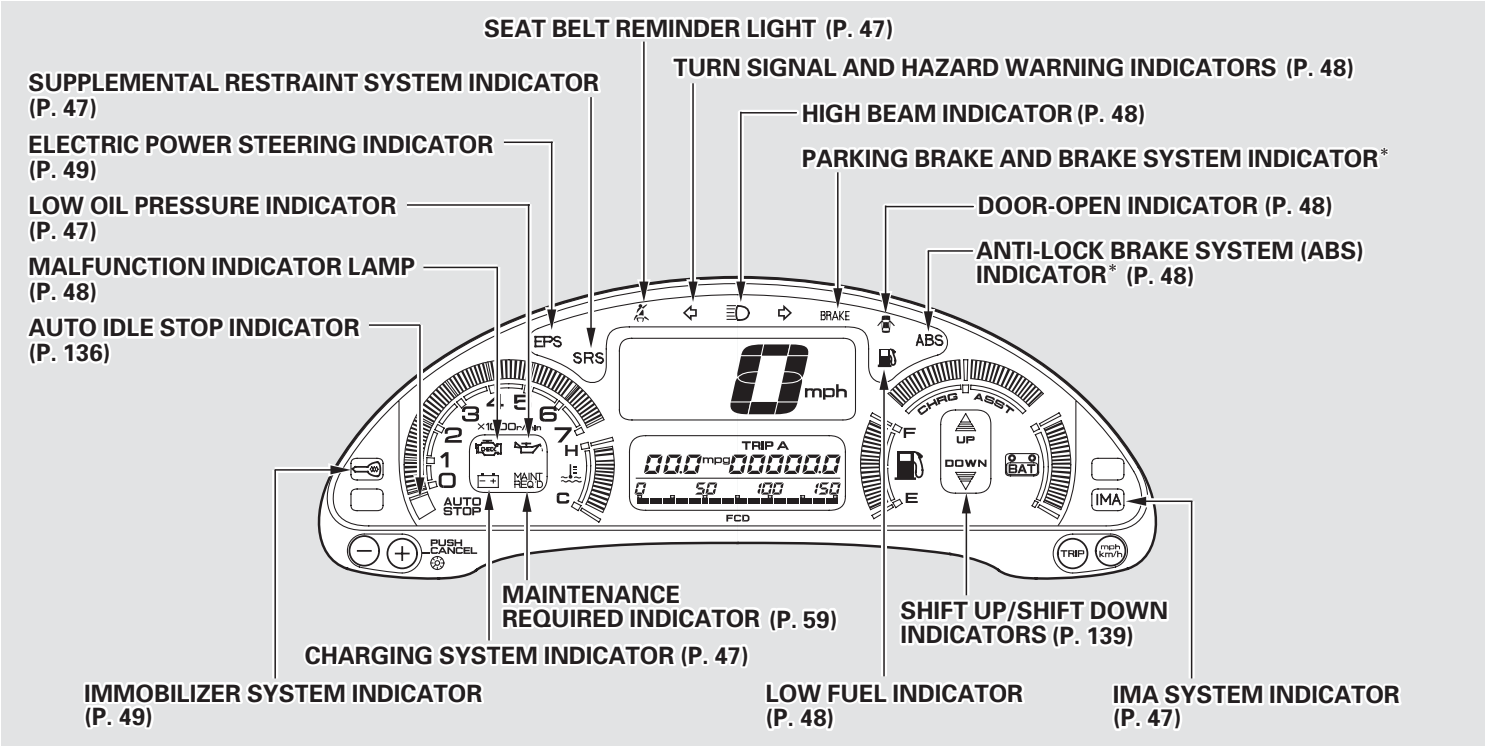

* The U.S. instrument panel is shown. Differences for the Canadian models are noted in the text.

CONTINUED

Indicator Lights

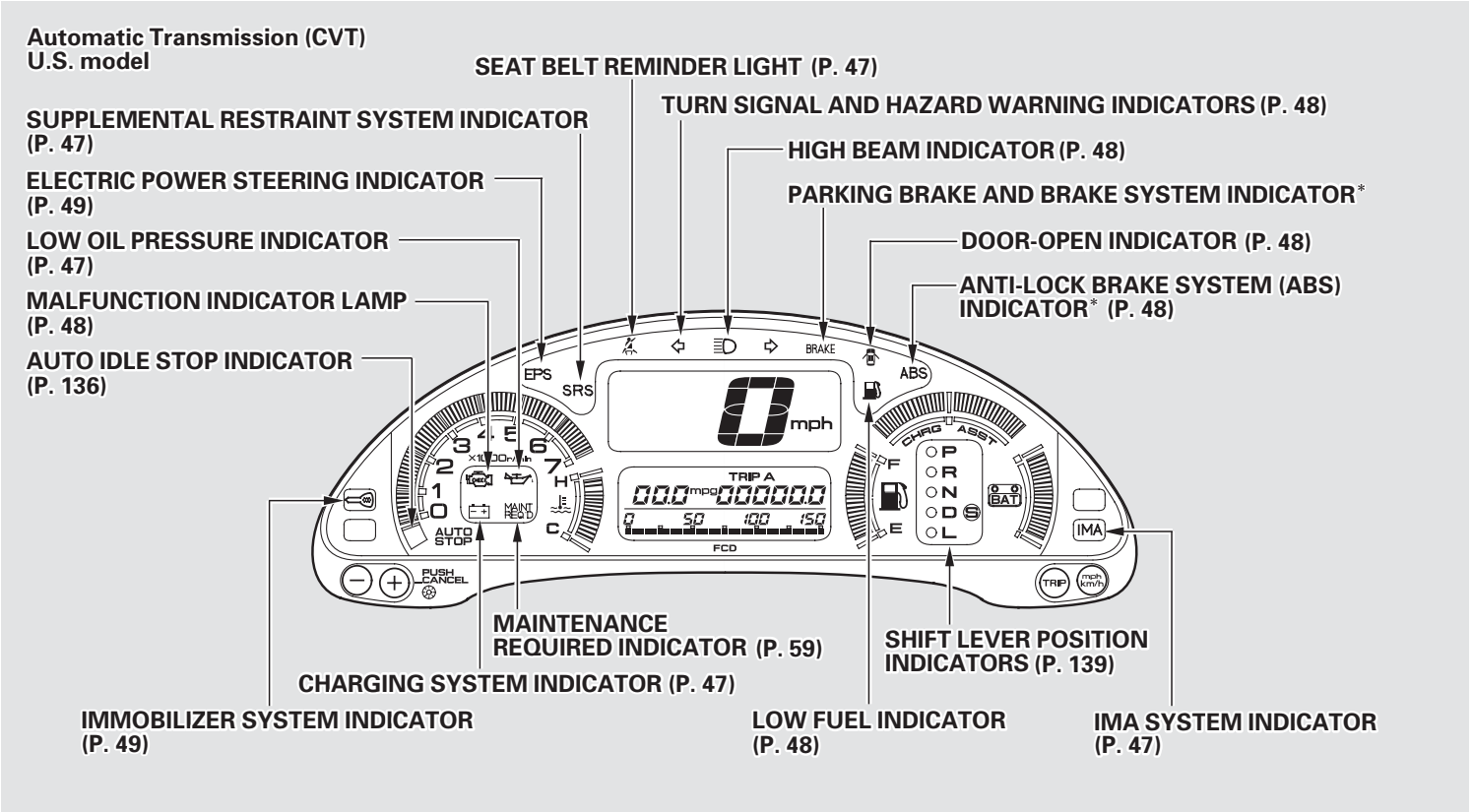

The instrument panel has many indicators to give you important information about your car.

Seat Belt Reminder Light

This indicator lights when you turn the ignition switch ON (II). It is a reminder to you and your passengers to protect yourselves by fastening the seat belts. A beeper also sounds if you have not fastened your seat belt.
If you do not fasten your seat belt, the beeper will stop after a few seconds but the light stays on until you do. Both the light and the beeper stay off if you fasten your seat belt before turning on the ignition.

Charging System Indicator

If this light comes on when the engine is running, the battery is not being charged. For complete information, see page 227 .

Low Oil Pressure Indicator

The engine can be severely damaged if this light flashes or stays on when the engine is running. For complete information, see page 226 .

Supplemental Restraint System Indicator

This indicator lights when you turn the ignition switch ON (II). If it comes on at any other time, it indicates a problem in the supplemental restraint system. For complete information, see page 38 .

Shift Up/Shift Down Indicators
(Manual Transmission)
See page 141 .

Shift Lever Position Indicator
(Automatic Transmission)
See page 142 .

Auto Idle Stop Indicator
See pages 137, 139 .

IMA System Indicator

This indicator normally comes on for a few seconds when you turn the ignition switch ON (II). If it comes on at any other time, it indicates a problem in the Integrated Motor Assist (IMA) system. Have the vehicle checked by the dealer as soon as possible.

Parking Brake and Brake System Indicator

This light has two functions:

1. This indicator is a reminder to check the parking brake. Driving with the parking brake not fully released can damage the brakes and tires.

CONTINUED

2. If the indicator remains lit after you have fully released the parking brake while the engine is running, or if it comes on while driving, it can indicate a problem in the brake system. For complete information, see page 232 .

Malfunction Indicator Lamp

See page 230 .

Turn Signal and Hazard Warning Indicators

The left or right turn signal light blinks when you signal a lane change or turn. If the light does not blink or blinks rapidly, it usually means one of the turn signal bulbs is burned out (see page 201). Replace the bulb as soon as possible, since other drivers cannot see that you are signalling. When you turn on the Hazard Warning switch, both turn signal lights blink. All turn signals on the outside of the car should flash.

High Beam Indicator

This light comes on with the high beam headlights. See page 61 for information on the headlight controls.

On Canadian models, this indicator comes on with reduced brightness when the Daytime Running Lights (DRL) are on (see page 62).

U.S. Canada

Anti-lock Brake System (ABS) Indicator

This light normally comes on for a few seconds when you turn the ignition switch ON (II), and when the ignition switch is turned to START (III). If this light comes on at any other time, there is a problem in the ABS. If this happens, take the car to your dealer to have it checked. With the light on, your car still has normal braking ability but no anti-lock. For complete information, see page 150 .

Door-open Indicator

This light comes on if either door or the hatch is not closed tightly.

Low Fuel Indicator

This light comes on as a reminder that you must refuel soon.

DRL "Daytime Running Lights" Indicator

Canadian models only

This indicator lights when you turn the ignition switch to ON (II) with the headlight switch off and the parking brake set. It should go off if you turn on the headlights or release the parking brake. If it comes on at any other time, it means there is a problem with the DRL. There may also be a problem with the high beam headlights.

Immobilizer System Indicator

This indicator comes on for a few seconds when you turn the ignition switch ON (II). It will then go off if you have inserted a properly-coded ignition key. If it is not a properly-coded key, the indicator will blink and the engine will not start (see page 68).

EPS Electric Power Steering (EPS) Indicator

This light normally comes on when you turn the ignition ON (II) and goes off after the engine starts. If it comes on at any other time, there is a problem in the Electric Power Steering system. If this happens, stop the car in a safe place and turn off the engine. Reset the system by restarting the engine, and watch the EPS light. If it does not go off, or comes back on again while driving, take the car to your dealer to have it checked. With the light on, the EPS is turned off, making the car harder to steer.

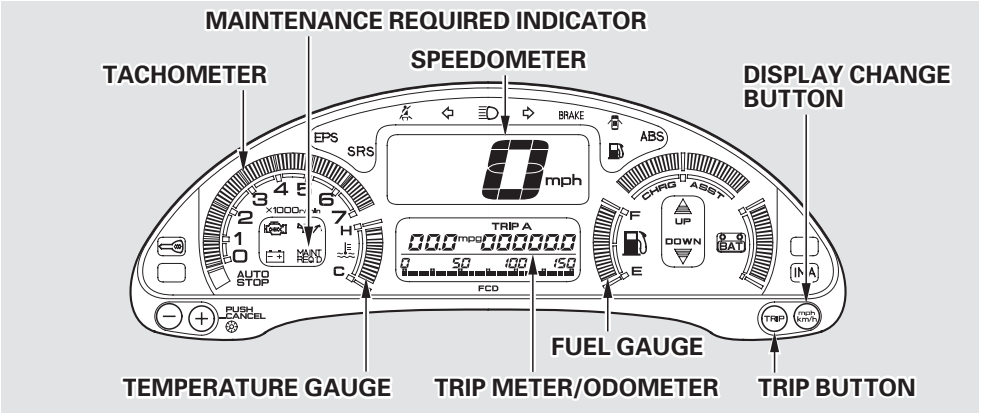

Speedometer

This shows your speed in miles per hour (mph) or kilometers per hour (km/h).

Display Change Button

The Display Change button switches the speedometer reading between miles per hour and kilometers per hour. It also changes the odometer and trip meters to read in miles or kilometers correspondingly. To change the readings, push the Display Change button until the display changes.

Odometer

The odometer shows the total distance your car has been driven. It displays in miles and kilometers.
It is illegal under U.S. federal law and Canadian provincial regulations to disconnect, reset, or alter the odometer with the intent to change the number of miles or kilometers indicated.

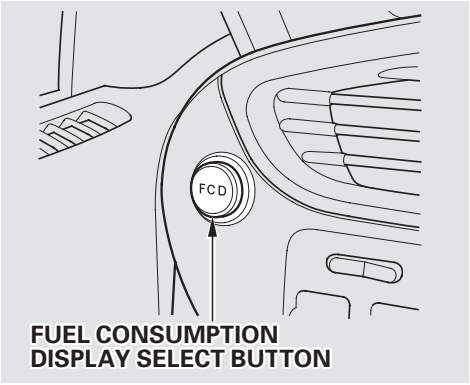
FCD
FUEL CONSUMPTION
DISPLAY SELECT BUTTON

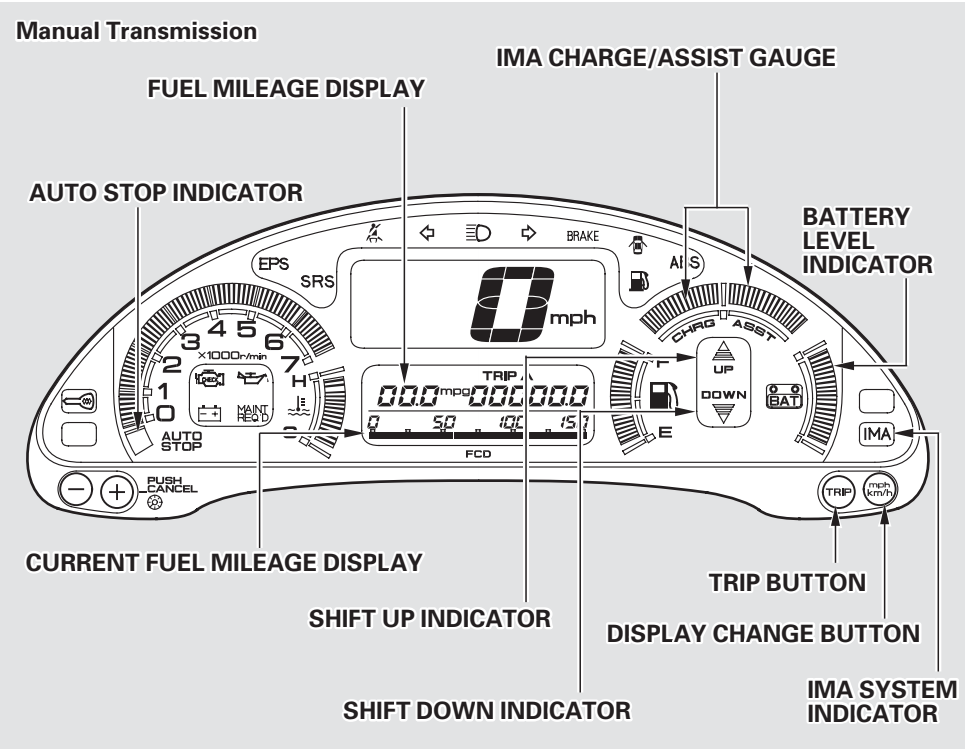
Manual Transmission
IMA CHARGE/ASSIST GAUGE
FUEL MILEAGE DISPLAY
AUTO STOP INDICATOR
BATTERY
LEVEL
INDICATOR
EPS
SRS
BRAKE
ABS
mph
CHRG
ASST
UP
DOWN
BAT
IMA
TRIP
FCD
AUTO
STOP
MAINT
REQ'D
PUSH
CANCEL
CURRENT FUEL MILEAGE DISPLAY
TRIP BUTTON
SHIFT UP INDICATOR
DISPLAY CHANGE BUTTON
SHIFT DOWN INDICATOR
IMA SYSTEM
INDICATOR

CONTINUED

Automatic Transmission (CVT)
U.S. model

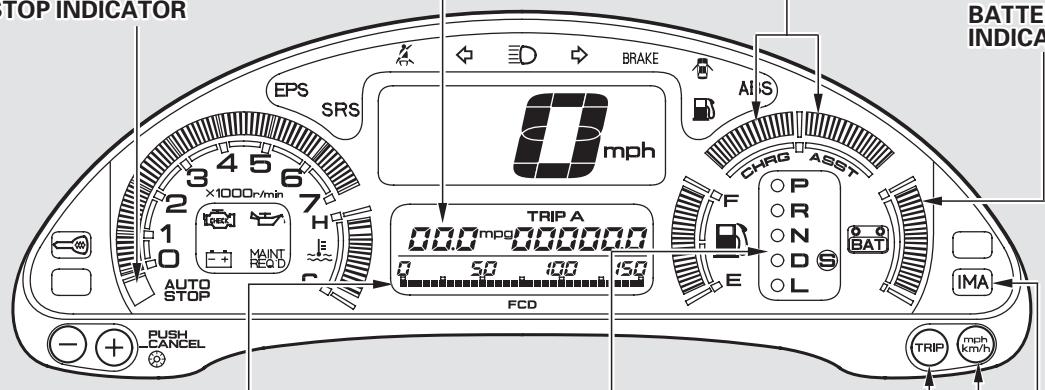

Current Fuel Mileage

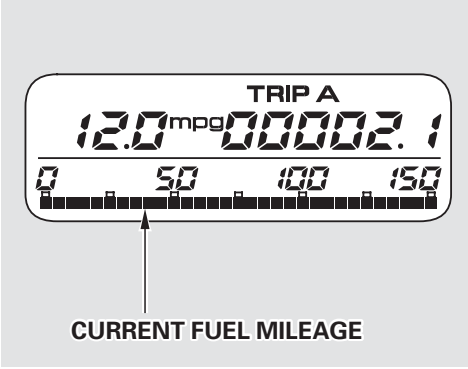

This display shows the current, or instantaneous fuel mileage you are getting.
To change the meter reading in the display, push the display change button.
(U.S.: miles per hour and mpg, Canada: kilometer per hour and l/100 km)
You can turn off this display at any time. See page 55 .

Trip Meters

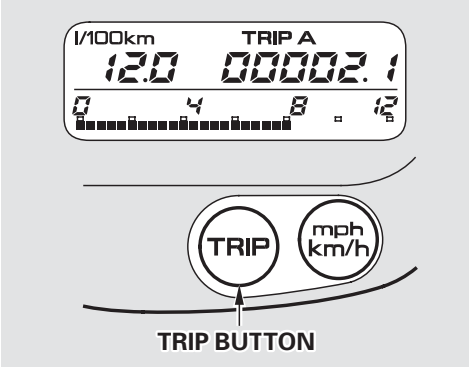

The trip meters show the number of miles or kilometers driven since you last reset them.

There are two trip meters: Trip A and Trip B. Each trip meter works independently, so you can keep track of two different distances. To change the display to show Trip A, Trip B, or the odometer, press the Trip button repeatedly.

To reset a trip meter, display it, then press and hold the Trip button until the numbers reset to 0.0.

CONTINUED

Trip Mileage

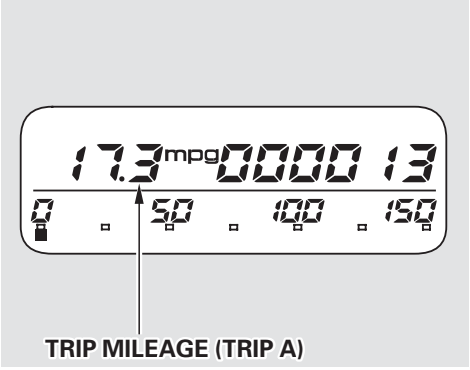

When a trip meter is displayed, the average fuel mileage you have been getting during that trip is shown in the Fuel Mileage display. This number is updated once per minute.

When you reset a trip meter, the average fuel mileage for that trip meter also resets.

This display can be turned off at any time. See page 55 .

Segment Distance and Fuel Mileage

You can use this function to display the distance and average fuel mileage for a segment of a trip.

To display the segment distance and fuel mileage, press and release the FCD Select button. The Segment Display indicator will come on to remind you that this is the segment distance and fuel mileage display.

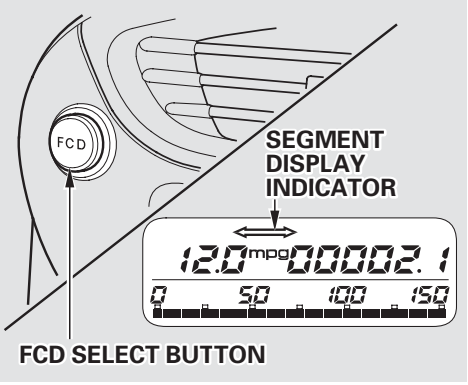

To reset the display, press and hold the FCD Select button until the display resets to zero and dashes. The system then begins displaying the distance and average fuel mileage from that point. The display is updated once per minute.

To switch between the segment display and the Trip Meter/ Odometer display, press and release the FCD Select button.

Lifetime Fuel Mileage

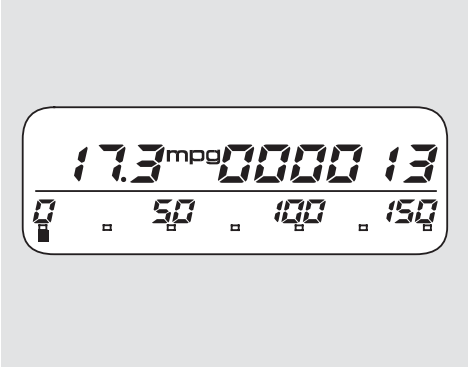

When the odometer is displayed, the Fuel Mileage display shows the lifetime fuel mileage. This is the average fuel mileage your vehicle has gotten since the last time the display was reset.

To reset this display, turn the ignition switch to ON (II). If the engine is running, make sure the transmission is in neutral and the parking brake is set. Use the Trip button to display the odometer. Then press and hold the Trip button until the Lifetime Fuel Mileage Display begins to blink (approximately five seconds). Release the Trip button, then press it again while the display is blinking and hold it until the display clears to dashes.

Turning Off the Mileage Displays

You can temporarily turn off the Current Fuel Mileage and Fuel Mileage displays.

To turn them off:

1. Turn the ignition switch to ON (II). If the engine is running, make sure the transmission is in neutral and the parking brake is set.
2. Use the Trip button to select Trip A, Trip B, or the odometer.
3. Press and hold the FCD Select button for approximately three seconds. The Current Fuel Mileage display will turn off.
4. Press and hold the FCD Select button again. The Fuel Mileage display for the meter you are displaying (Trip A, Trip B, or odometer) will turn off.

CONTINUED

5. Use the Trip button to select another mileage display.

6. Press and hold the FCD Select button again to turn off that display.

7. Use the Trip button to select the third display.

8. Press and hold the FCD Select button again to turn off that display.

Although the displays are turned off, the average fuel mileages continue to be calculated. The displays will turn back on when you press and hold the FCD Select button again.

Battery Level Gauge

With 5-speed

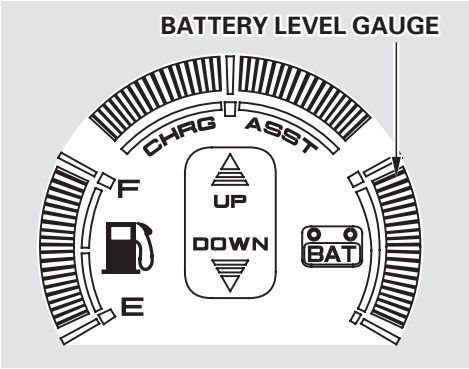

This gauge shows you the state of charge of the battery for the Integrated Motor Assist (IMA). This battery is recharged by the engine, and discharged by the IMA when it is assisting the engine with powering the vehicle.

With CVT (U.S. only)

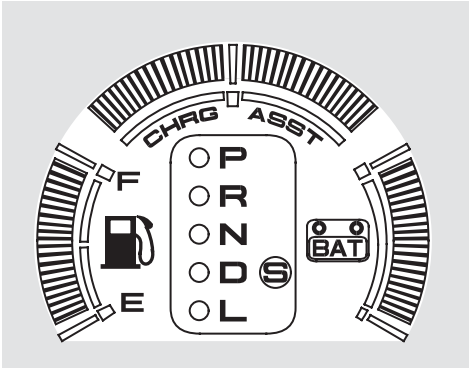

The gauge reading may drop near the bottom under driving conditions that require assist for a long time, such as prolonged acceleration or climbing a long hill. The engine will recharge the battery as you continue driving.

If the battery is mostly discharged, the Auto Idle Stop operation is disabled. (See pages 136, 138)

Charge/Assist Gauge

With 5-speed

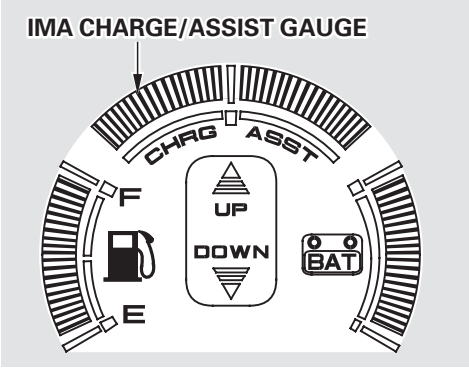

This gauge shows the status of the Integrated Motor Assist. If the indicator is on the left side of the gauge, the IMA battery is being charged. If the indicator is on the right side of the gauge, the IMA is assisting the engine.

With CVT (U.S. only)

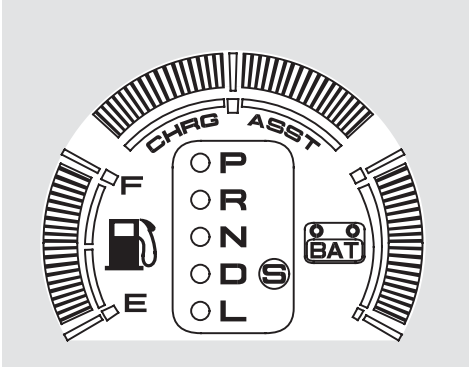

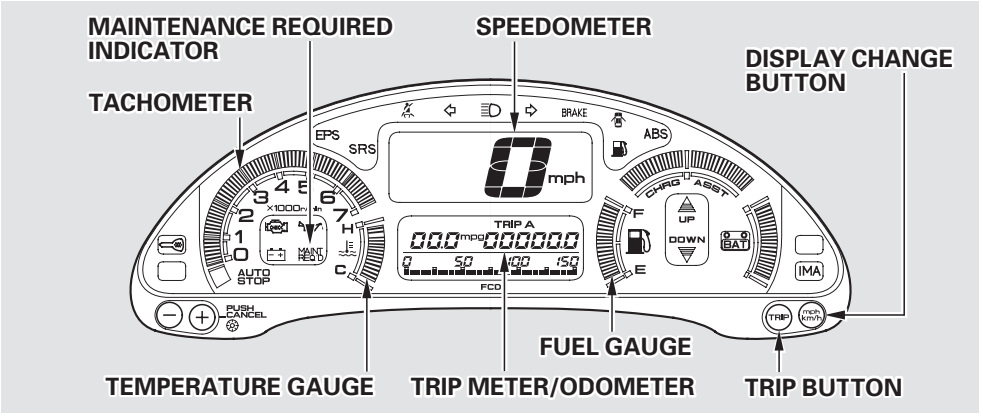

Fuel Gauge

This shows how much fuel you have. It is most accurate when the car is on level ground. It may show slightly more or less than the actual amount when you are driving on curvy or hilly roads.

Temperature Gauge

This shows the temperature of the engine's coolant. During normal operation, the reading should be in the middle of the gauge. In severe driving conditions, such as very hot weather or a long period of uphill driving, the reading may reach near the red mark. If it reaches the red mark, pull safely to the side of the road. Turn to page 226 for instructions and precautions on checking the engine's cooling system.

Tachometer

The tachometer shows the engine speed in revolutions per minute (rpm). To protect the engine from damage, never drive with the tachometer reading in the red zone.

Maintenance Required Indicator

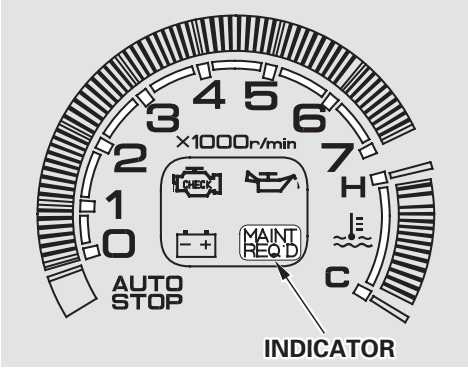

This indicator reminds you that it is time to take your car in for scheduled maintenance.
Refer to the Maintenance Schedules for Normal and Severe Driving Conditions on pages 158 — 162 .

When the distance driven since the last scheduled maintenance reaches 6,000 miles (9,600 km), the indicator starts blinking. If you exceed 7,500 miles (12,000 km), the indicator stays on.

Your dealer will reset this indicator after completing the scheduled maintenance. If this maintenance is done by someone other than your Honda dealer, reset the indicator as follows.

1. Turn off the engine.

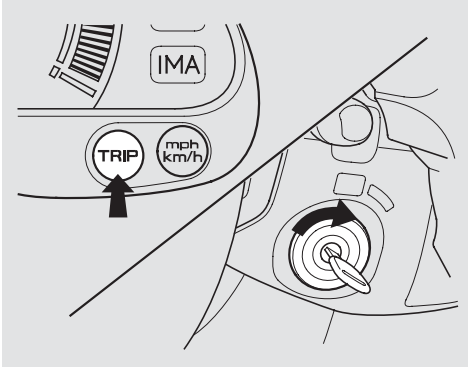

2. Press and hold the trip button in the instrument panel, then turn the ignition switch ON (II).

3. Hold the button until the indicator resets (approximately ten seconds).

Controls Near the Steering Wheel

The two levers on the steering column contain controls for driving features you use most often. The left lever controls the turn signals, headlights, and high beams. The right lever controls the windshield washers and wipers.

The hazard warning lights switch is on the dashboard to the right of the center air vents.

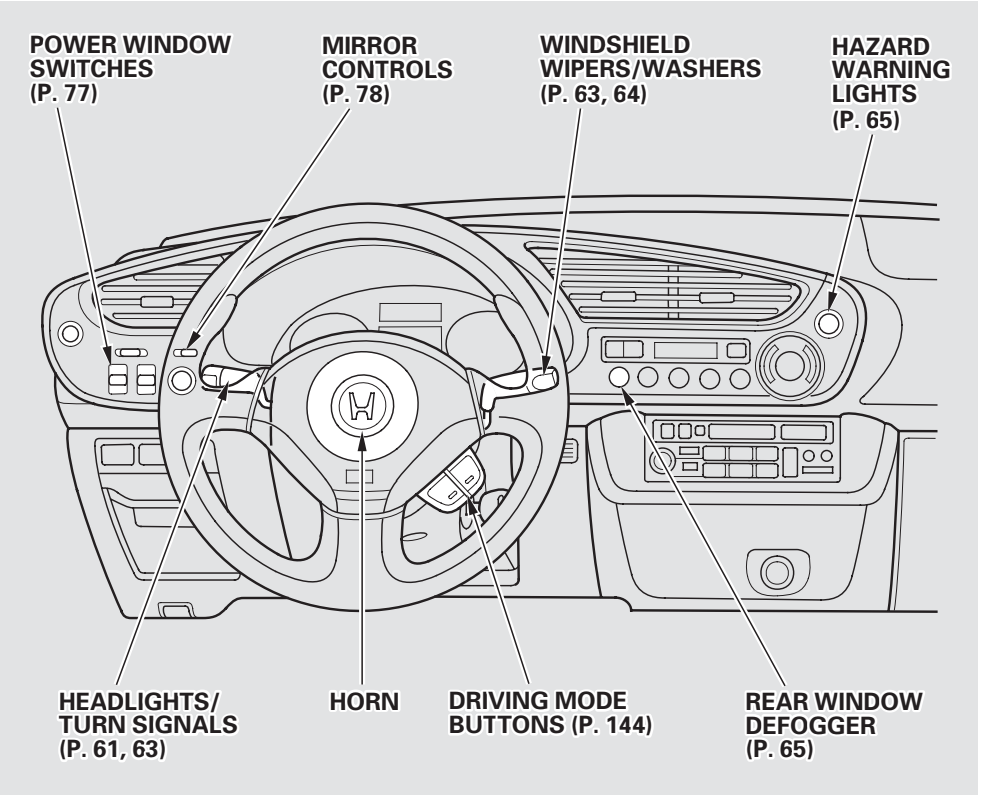

Headlights

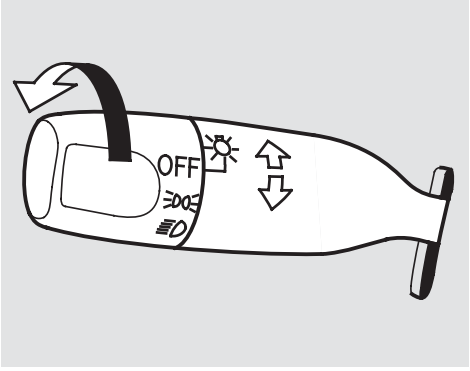

The rotating switch on the left lever controls the lights. Turning this switch to the " " position turns on the parking lights, taillights, instrument panel lights, side-marker lights, and rear license plate lights. Turning the switch to the " " position turns on the headlights.

If you leave the lights on with the ignition switch in ACCESSORY (I) or LOCK (0), you will hear a reminder tone when you open the driver's door.

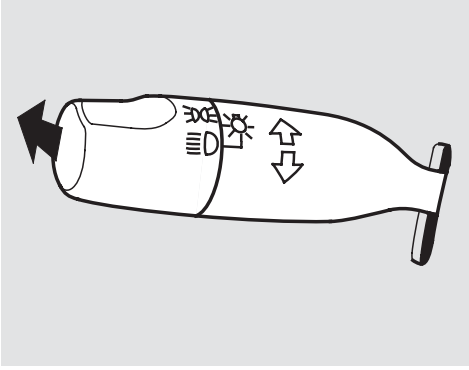

To change from low beams to high beams, push the turn signal lever forward until you hear a click. The blue high beam indicator will light (see page 48). To return to low beams, pull the turn signal lever back.

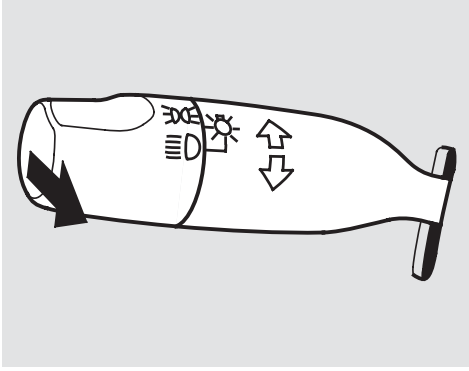

To flash the high beams, pull the turn signal lever back lightly, then release it. The high beams will come on and go off. The high beams will stay on for as long as you hold the lever back, no matter what position the headlight switch is in.

Daytime Running Lights

Canadian models only

With the headlight switch off, the high beam headlights come on with reduced brightness when you turn the ignition switch to ON (II) and release the parking brake. They remain on until you turn the ignition off, even if you set the parking brake.

The headlights revert to normal operation when you turn them on with the switch.

Instrument Panel Brightness

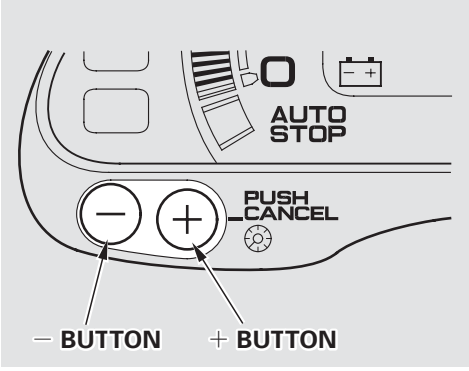

The buttons in the lower left corner of the instrument panel adjust the brightness of the display in six steps. Push the + or – button five times to see the full range.

The display dims when the parking lights or headlights are turned on. Adjust the brightness to the desired level with the headlight switch off, and also with the headlight switch on. Both settings will remain at those levels until you change them.

With the headlight switch on, you can switch the display to full daytime brightness by pushing and holding the + button. Push the – button to return the display to the original brightness.

Turn Signals

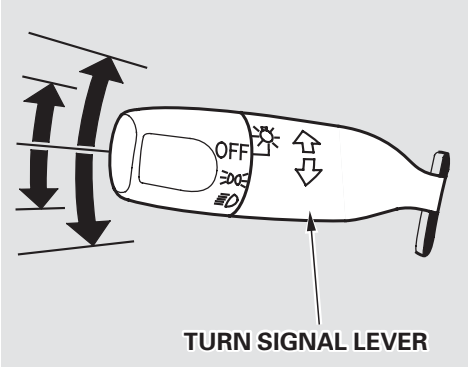

Signal a turn or lane change with this lever. Push down on the lever to signal a left turn, and up to signal a right turn. If you push it up or down all the way, the turn signal continues to blink even when you release the lever. It shuts off automatically as you complete the turn.

To signal a lane change, push lightly on the turn signal lever in the proper direction and hold it. The lever will return to the center position as soon as you release it.

Windshield Wipers

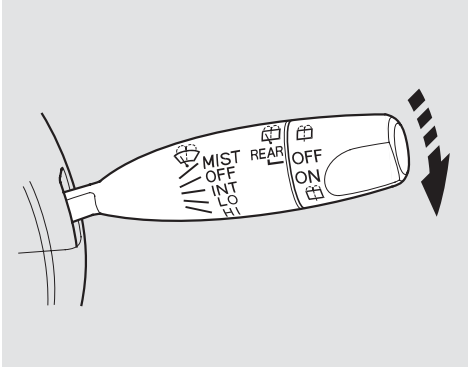

This lever controls the windshield wipers and washers. It has five positions;

MIST: mist
OFF: off
INT: intermittent
LO: low speed
HI: high speed

To select a position, push the lever up or down.

CONTINUED

In intermittent, the wipers operate every few seconds. In low speed and high speed, the wipers run continuously.

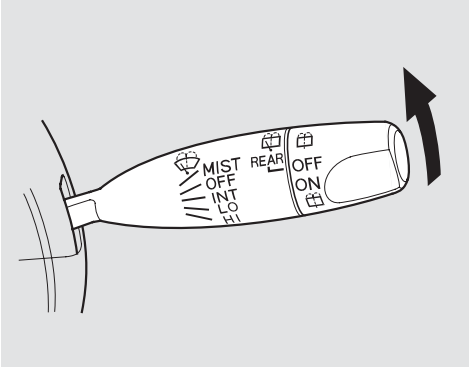

To operate the wipers in mist mode, push the control lever up from the OFF position. The wipers run at high speed until you release the lever. This gives you a quick way to clear the windshield.

Windshield Washers

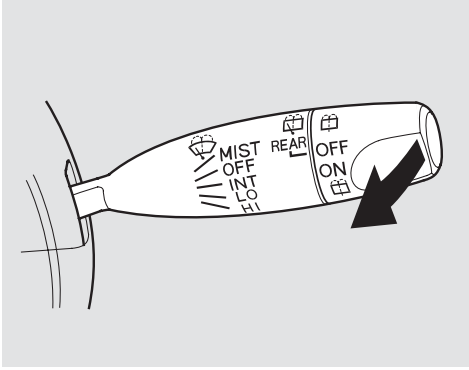

To clean the windshield, pull back on the wiper control lever. The washers spray until you release the lever.

Rear Window Wiper and Washer

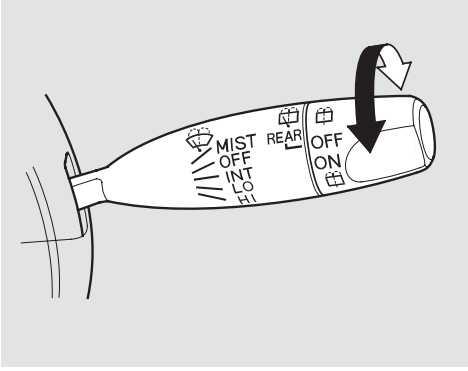

To turn on the rear window wiper, turn the ring clockwise to ON. To also use the rear window washer, turn the ring clockwise past ON. The washer will spray as long as you hold the ring in this position. If you turn the ring counterclockwise from the OFF position, the washer will spray without activating the rear window wiper.

Hazard Warning

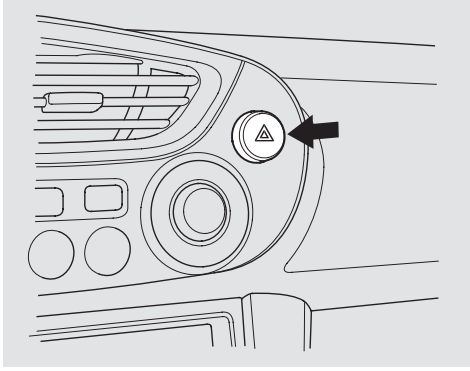

Push the button to the right of the center vents to turn on the hazard warning lights (four-way flashers). This causes all four outside turn signals and both indicators in the instrument panel to flash. Use the hazard warning lights if you need to park in a dangerous area near heavy traffic, or if your car is disabled.

Rear Window Defogger

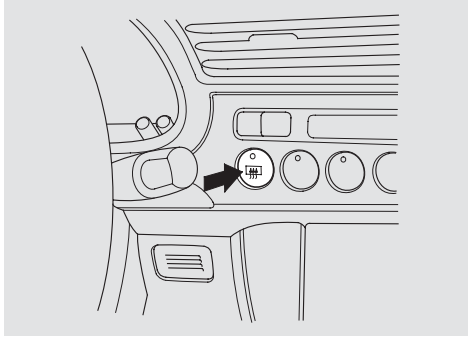

Manual Operation

The rear window defogger will clear fog, frost, and thin ice from the window. Push the defogger button to turn it on and off. The light in the button lights to show the defogger is on. If you do not turn it off, the defogger will shut itself off after about 25 minutes. It also shuts off when you turn off the ignition. You have to turn it on again when you restart the car.

CONTINUED

Automatic Operation
The rear window defogger turns on automatically when you turn the ignition switch ON (II) if the outside temperature is below 32°F (0°C), or if the engine is at ambient temperature. The light in the button does not light.

It will also turn off automatically after 25 minutes.

Make sure the rear window is clear and you have good visibility before starting to drive.

The defogger wires on the inside of the rear window can be accidentally damaged. When cleaning the glass, always wipe side to side.

Keys

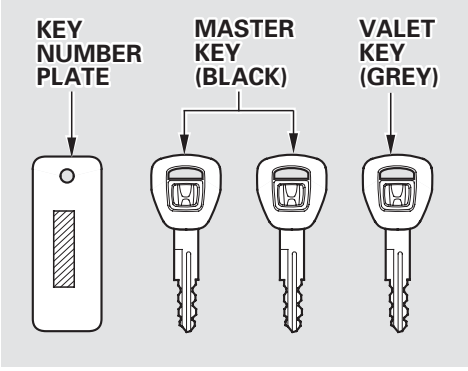

Your car comes with two master keys and a valet key.
The master key fits all the locks on your vehicle:
- Ignition
- Doors
- Hatch
- Glove box

The valet key works only in the ignition and the door locks. You can keep the glove box and the hatch locked when you leave your car and the valet key at a parking facility.

You should have received a key number plate with your keys. You will need this key number if you ever have to get a lost key replaced. Keep the plate stored in a safe place. If you need to replace a key, use only Honda-approved key blanks.

These keys contain electronic circuits that are activated by the Immobilizer System. They will not work to start the engine if the circuits are damaged.

- Protect the keys from direct sunlight, high temperature, and high humidity.
- Do not drop the keys or set heavy objects on them.
- Keep the keys away from liquids. If they get wet, dry them immediately with a soft cloth.

The keys do not contain batteries. Do not try to take them apart.

Remote Transmitter
Your car also comes with two remote transmitters; see page 73 for an explanation of the operation.

Immobilizer System
The Immobilizer System protects your car from theft. A properly-coded master or valet key must be used in the ignition switch for the engine to start. If an improperly-coded key (or other device) is used, the engine's fuel system is disabled.

When you turn the ignition switch to ON (II), the Immobilizer System indicator should come on for a few seconds, then go out. If the indicator starts to blink, it means the system does not recognize the coding of the key. Turn the ignition switch to LOCK (0), remove the key, reinsert it, and turn the switch to ON (II) again.

The system may not recognize your key's coding if another immobilizer key or other metal object is near the ignition switch when you insert the key. To make sure the system recognizes the key code:

- Do not keep other immobilizer keys on the same key ring.
- Use a plastic or leather key fob, not metal.
- Keep other keys away from your vehicle's key and the ignition switch while trying to start the engine.

If the system repeatedly does not recognize the coding of your key, contact your Honda dealer.

This indicator will also blink several times when you turn the ignition switch from ON (II) to ACCESSORY (I) or LOCK (0).

Do not attempt to alter this system or add other devices to it. Electrical problems could result that may make your car undriveable.

If you have lost your key and you cannot start the engine, contact your Honda dealer.

As required by the FCC:
This device complies with Part 15 of the FCC rules. Operation is subject to the following two conditions: (1) This device may not cause harmful interference, and (2) this device must accept any interference received, including interference that may cause undesired operation.

Changes or modifications not expressly approved by the party responsible for compliance could void the user's authority to operate the equipment.

This device complies with Industry Canada Standard RSS-210.
Operation is subject to the following two conditions: (1) this device may not cause interference, and (2) this device must accept any interference that may cause undesired operation of the device.

Ignition Switch

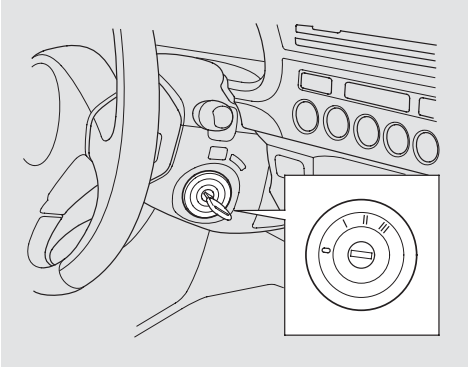

The ignition switch is on the right side of the steering column. It has four positions:

- LOCK (0)
- ACCESSORY (I)
- ON (II)
- START (III)

LOCK (0) — You can insert or remove the key only in this position. To switch from ACCESSORY to LOCK, you must push the key in slightly as you turn it. The anti-theft lock will lock the steering column when you remove the key. If the front wheels are turned, the anti-theft lock may sometimes make it difficult to turn the key from LOCK to ACCESSORY. Firmly turn the steering wheel to the left or to the right as you turn the key.

⚠ WARNING

Removing the key from the ignition switch while driving locks the steering. This can cause you to lose control.

Remove the key from the ignition switch only when parked.

CONTINUED

ACCESSORY (I) — In this position, you can operate the audio system and the accessory power socket.

ON (II) — This is the normal key position when driving. All features and accessories on the car are usable. Several of the lights on the instrument panel come on as a test when you turn the ignition switch from ACCESSORY to ON.

START (III) — Use this position only to start the engine. The switch returns to ON (II) when you let go of the key.

The engine will not start if the Immobilizer System does not recognize the key's coding (see page 68).

You will hear a reminder beeper if you leave the key in the ignition switch in the LOCK (0) or ACCESSORY (I) position and open the driver's door. Remove the key to turn off the beeper.

Door Locks

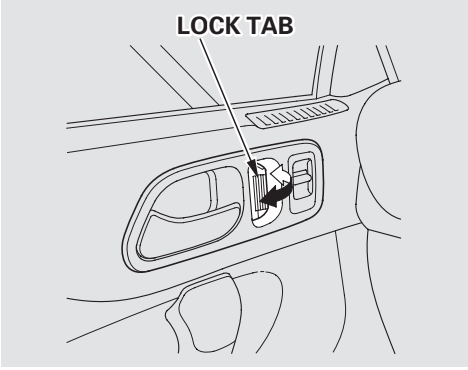

Each door has a lock tab next to the inside door handle. Push the tab in to lock the door, and pull it out to unlock.

To lock the passenger's door when getting out of the car, push the lock tab in and close the door. To lock the driver's door, pull the door handle and push the lock tab in. Release the handle, then close the door.

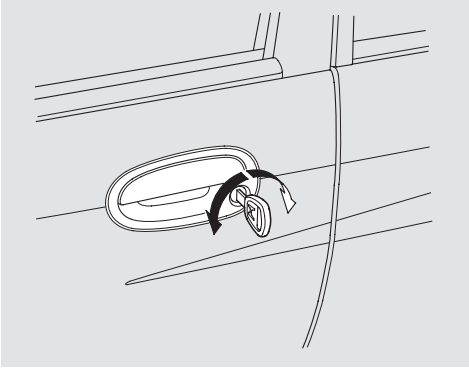

The doors can also be locked and unlocked from the outside with the key.

Hatch

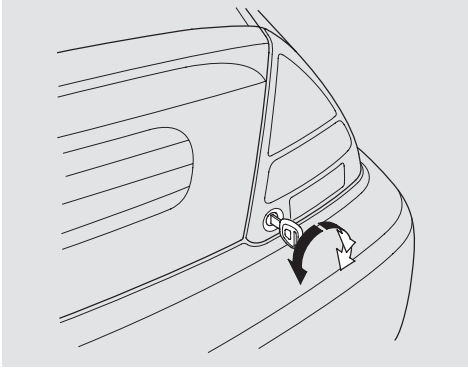

Use the master key to lock and unlock the hatch. The valet key does not work in this lock.
To lock the hatch, turn the key counterclockwise. To unlock the hatch, turn it clockwise.

CONTINUED

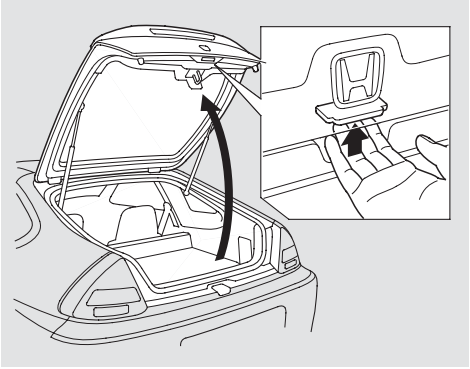

To open the hatch, push the lever behind the hatch's back edge. To close the hatch, push down on the back edge.

See page 131 for cargo loading and weight limit information. Keep the hatch closed at all times while driving to avoid damaging the hatch and to prevent exhaust gas from getting into the interior. See **Carbon Monoxide Hazard** on page 40 .

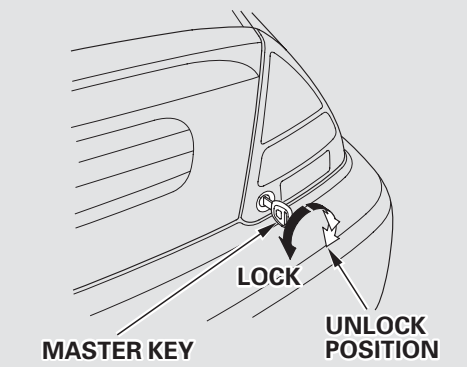

If an unlocked hatch does not open, turn the key clockwise past the unlock position. Open the hatch as you hold the key in that position.

If you need to use this procedure to open the hatch, your car may be developing a problem. Have the vehicle checked by your Honda dealer.

Remote Transmitter

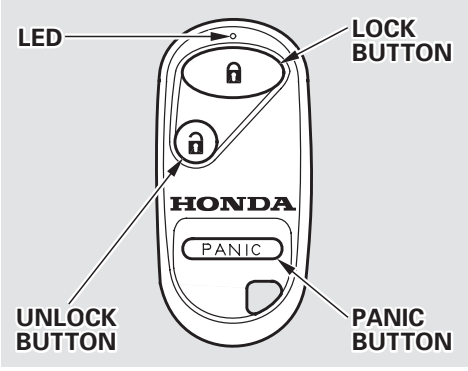

You can lock and unlock your car with the remote transmitter. When you push the LOCK button, both doors lock. The side marker lights and taillights flash once.

When you push the UNLOCK button once, only the driver's door unlocks. The parking lights and taillights flash twice. The passenger's door unlocks when you push the button a second time.

The interior light (if the interior light switch is in the center position) will come on when you press the UNLOCK button. If you do not open either door, the light will go out in about 30 seconds and the doors will automatically relock. If you relock the doors with the remote transmitter before 30 seconds have elapsed, the light will go off immediately.

You cannot lock or unlock the doors with the remote transmitter if either door is not fully closed or the key is in the ignition switch.

Horn Operation

The horn will sound if you push the LOCK button a second time within five seconds of locking the doors.

CONTINUED

Panic Mode
Panic mode allows you to remotely activate your car's security system to attract attention. When activated, the horn will sound, and the exterior lights will flash for about 30 seconds. To activate panic mode, press and hold the PANIC button for about one second.

To cancel Panic mode before 30 seconds, press any button on the remote transmitter. You can also turn the ignition switch to ON (II).

Replacing the Battery
When the remote transmitter's battery begins to get weak, it may take several pushes on the button to lock or unlock the doors, and the LED will get dim. Replace the battery as soon as possible.

Battery type: CR2025

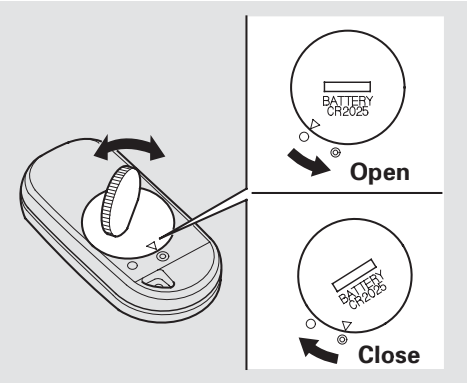

To replace the battery, remove the round cover on the back of the transmitter by turning it counterclockwise with a coin.

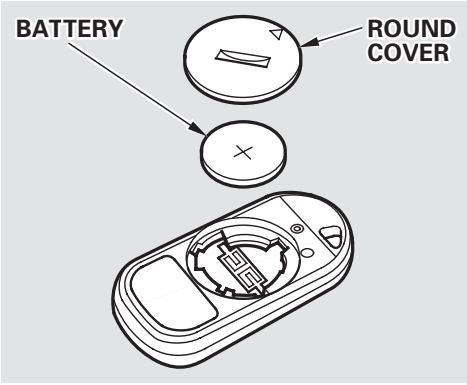

Remove the old battery and note the polarity. Make sure the polarity of the new battery is the same (+ side facing up), then insert it in the transmitter.

Align the ▽ mark on the cover with the ◎ mark on the transmitter, then set the cover in place and turn it clockwise.

Transmitter Care

Avoid severe shock to the transmitter, such as dropping or throwing it. Also, protect it from extreme hot or cold temperatures.

Clean the transmitter case with a soft cloth. Do not use strong cleaners or solvents that could harm the case. Immersing the transmitter in any liquid will harm the transmitter and cause it to not function properly.

If you lose a transmitter, you will need to have the replacement programmed to your vehicle's system by your Honda dealer. Any other transmitters you have will also need to be reprogrammed.

As required by the FCC:
This device complies with Part 15 of the FCC rules. Operation is subject to the following two conditions: (1) This device may not cause harmful interference, and (2) this device must accept any interference received, including interference that may cause undesired operation.

Changes or modifications not expressly approved by the party responsible for compliance could void the user's authority to operate the equipment.

This device complies with Industry Canada Standard RSS-210.
Operation is subject to the following two conditions: (1) this device may not cause interference, and (2) this device must accept any interference that may cause undesired operation of the device.

Front Seat Adjustments

See pages 12 — 14 for important safety information and warnings about how to properly position seats and seat-backs.

Make all seat adjustments before you start driving.

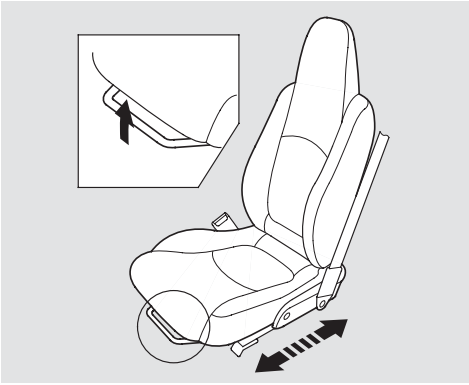

To adjust the seat forward and backward, pull up on the lever under the seat cushion's front edge. Move the seat to the desired position and release the lever. Try to move the seat to make sure it is locked in position.

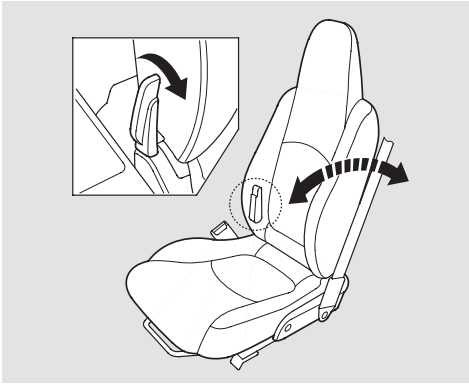

To change the angle of the seat-back, push forward on the lever next to the seat bolster, on the side of the seat-back. Move the seat-back to the desired position and release the lever. Let the seat-back latch in the new position.

Your car's windows are electrically-powered. Turn the ignition switch to ON (II) to raise or lower either window.

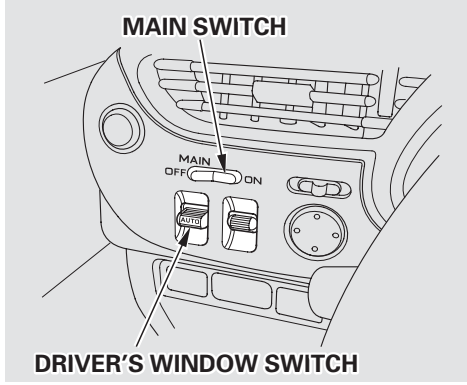

There is a master power window control panel on the dashboard. To open the passenger's window, push down on the switch and hold it down until the window reaches the desired position. To close the window, push up on the window switch. Release the switch when the window gets to the position you want.

⚠ WARNING

Closing a power window on someone's hands or fingers can cause serious injury.

Make sure your passenger is away from the window before closing it.

The master control panel also contains these extra features:

AUTO — To open the driver's window fully, push the window switch firmly down and release it. The window automatically goes all the way down. To stop the window from going all the way down, pull back on the window switch briefly. To open the driver's window only partially, push the window switch down lightly and hold it. The window will stop as soon as you release the switch.

CONTINUED

The AUTO function only works to lower the driver's window. To raise the window, you must push the window switch up and hold it until the window reaches the desired position.

The MAIN switch controls power to the passenger's window. With this switch off, the passenger's window cannot be raised or lowered. The MAIN switch does not affect the driver's window. Keep the MAIN switch off when you have a child in the car so the child does not get injured by operating the window unintentionally.

Adjusting the Power Mirrors

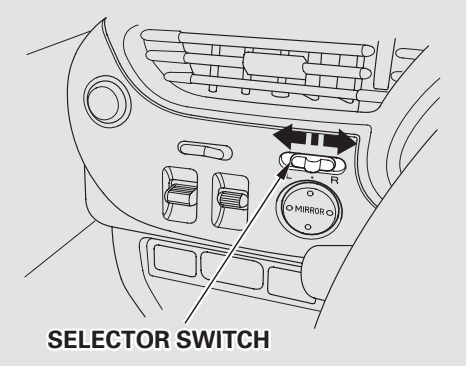

Adjust the outside mirrors with the adjustment switch on the left side of the dashboard:

1. Turn the ignition switch ON (II).

2. Move the selector switch to L (driver's side) or R (passenger's side).

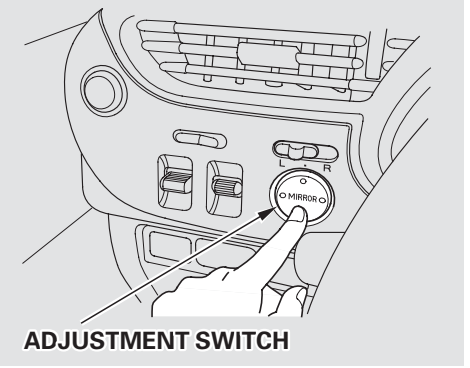

3. Push the appropriate edge of the adjustment switch to move the mirror right, left, up, or down.

4. When you finish, move the selector switch to the center (off) position. This turns off the adjustment switch so you can't move a mirror out of position by accidentally bumping the switch.

Mirrors

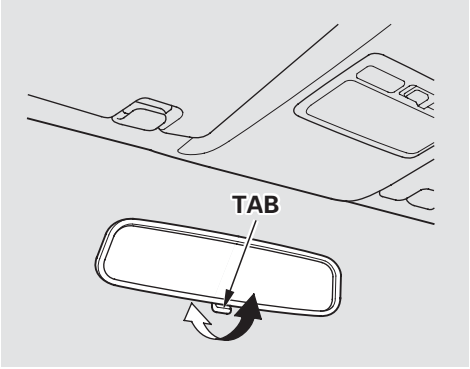

Keep the inside and outside mirrors clean and adjusted for best visibility. Be sure to adjust the mirrors before you start driving.

The inside mirror has day and night positions. The night position reduces glare from headlights behind you. Flip the tab on the bottom edge of the mirror to select the day or night position.

Parking Brake

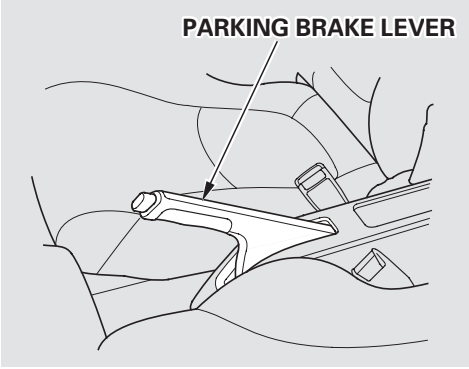

To apply the parking brake, pull the lever up fully. To release it, pull up slightly, push the button, and lower the lever. The parking brake light on the instrument panel should go out when the parking brake is fully released (see page 47).

NOTICE

Driving the car with the parking brake applied can damage the rear brakes and axles.

Storage Box

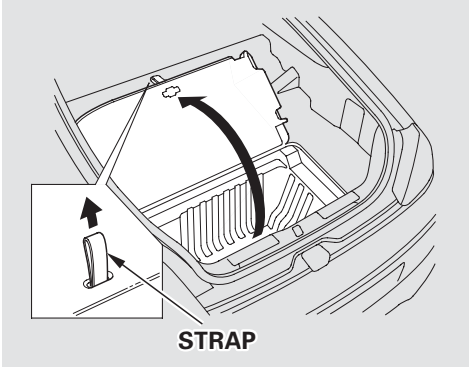

Your car has a storage box under the cargo compartment. To open the storage box, pull the strap.

Glove Box

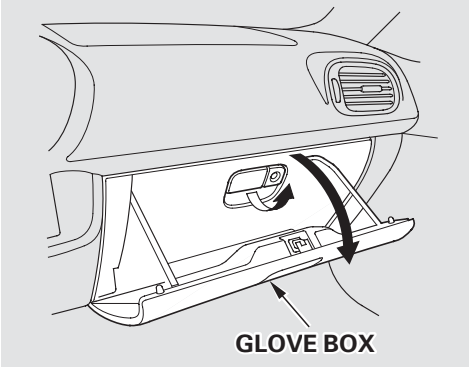

Open the glove box by pulling the bottom of the handle. Close it with a firm push. Lock or unlock the glove box with the master key.

⚠WARNING

An open glove box can cause serious injury to your passenger in a crash, even if the passenger is wearing the seat belt.

Always keep the glove box closed while driving.

Beverage Holder

Be careful when you are using the beverage holder. A spilled liquid that is very hot can scald you or your passenger. Spilled liquids can also damage the upholstery, carpeting, and electrical components in the interior.

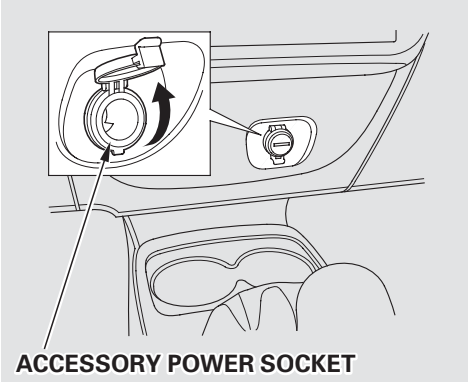

To use the accessory power socket, pull up the cover. The ignition switch must be in ACCESSORY (I) or ON (II).

This socket is intended to supply power for 12 volt DC accessories that are rated 120 watts or less (10 amps).

It will not power an automotive type cigarette lighter element.

Interior Light

Ceiling Lights

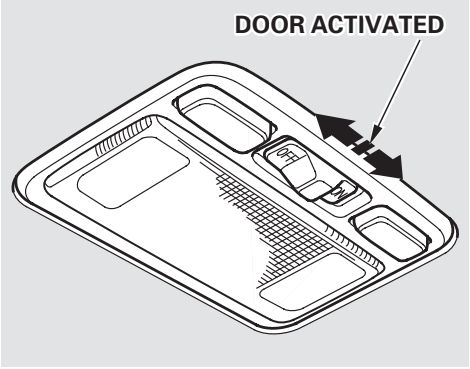

The interior light has a three-position switch. In the OFF position, the light does not come on. In the center position, the interior light comes on when you open either door. In the ON position, the interior light stays on continuously.

Spotlights

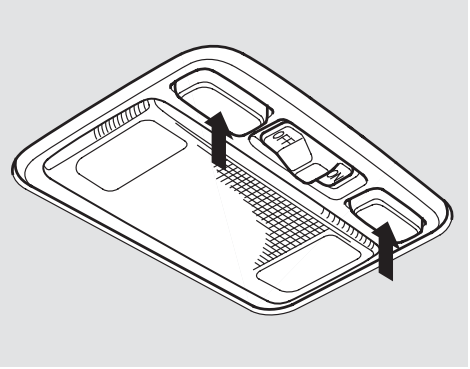

Turn on the spotlight by pushing the button next to each light. Push the button again to turn it off. You can use the spotlights at all times.

Cargo Area Light

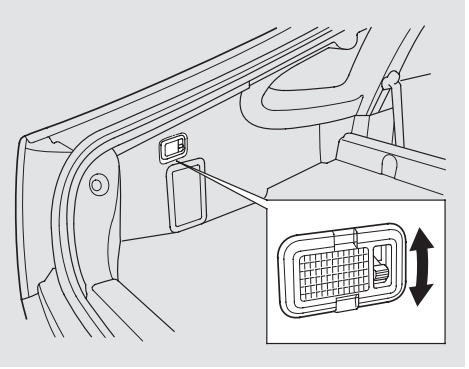

The cargo area light has a two-position switch. In the OFF (down) position, the light does not come on. In the ON (up) position, the light comes on when you open the hatch.

Comfort and Convenience Features

The heating and optional air conditioning systems in your Honda provide a comfortable driving environment in all weather conditions.

The standard audio system has many features. This section describes those features and how to use them.

Heating 84
What Each Control Does 84
Temperature Control Dial 84
ECON Button 84
Recirculation Button 84
Rear Window Defogger Button 84
Mode Buttons 85
How to Use the System 87
To Turn Everything Off 89
Climate Control System 90
Fully-automatic Operation 92
Semi-automatic Operation 93
ECON Button 93
Audio System 98
Operating the Radio 99
Adjusting the Sound 102
Operating the Optional CD Player/Changer 108
Radio Frequencies 112
Radio Reception 112
Operating the Optional CD Changer 114
Protecting Compact Discs 115
CD Player Error Indications 116
Caring for the Cassette Player 118

Proper use of the Heating system can make the interior comfortable, and keep the windows clear for best visibility.

What Each Control Does

Fan Control Buttons

Pressing the ✣▲ to increase the fan's speed, which increase air flow. Pressing the ✣▼ to decrease the fan's speed.

Temperature Control Dial

Turning this dial clockwise increases the temperature of the air flow.

ECON Button

When this button is pressed, the auto idle stop works only if the outside temperature is above 41°F (5°C).

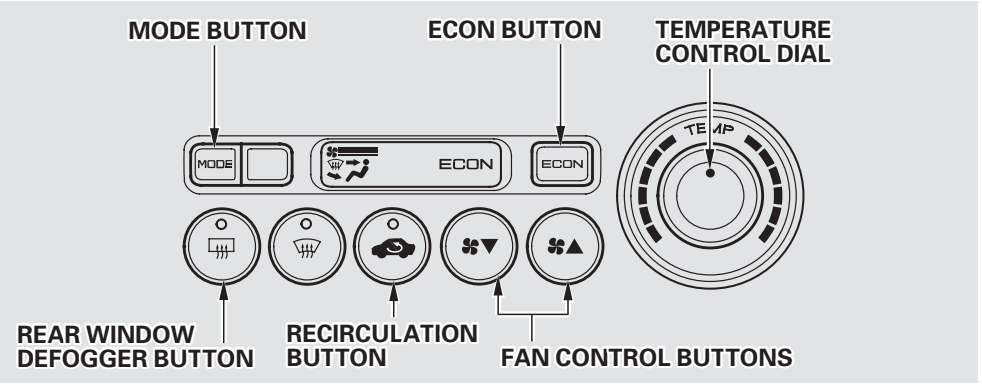

Recirculation Button

This button controls the source of the air going into the system. When the indicator in this button is lit, air from the car's interior is sent through the system again (Recirculation mode). When the indicator is off, air is brought in from outside the car (Fresh Air mode).

Rear Window Defogger Button

This button turns the rear window defogger on and off (see pages 65, 66).

Mode Buttons
Use the MODE buttons to select the vents the air flows from. Some air will flow from the dashboard corner vents in all modes.

Air flows from the center and corner vents in the dashboard.

Air flow is divided between the vents in the dashboard and the floor vents.

Air flows from the floor vents.

Air flow is divided between the floor vents and the defroster vents at the base of the windshield.

Air flows from the defroster vents at the base of the windshield.

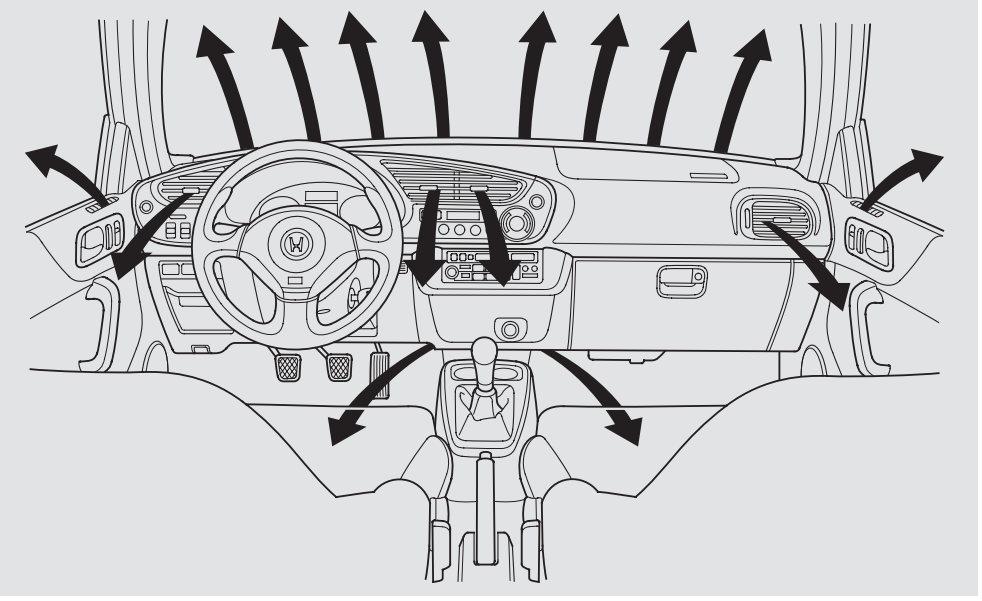

When you select or , the system automatically switches to Fresh Air mode.

When mode is selected, the auto stop function will not activate.

Vent Controls

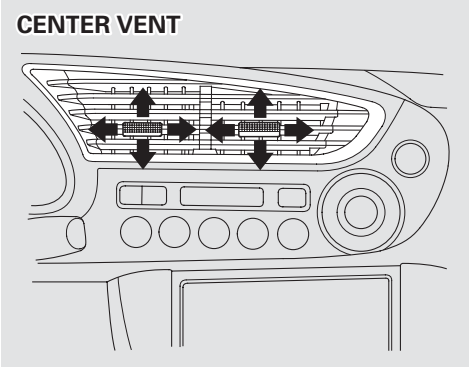

The direction of air flow from the vents in the center and each side of the dashboard is adjustable.

To adjust the air flow from the center vent, move the tab up-and-down and side-to-side.

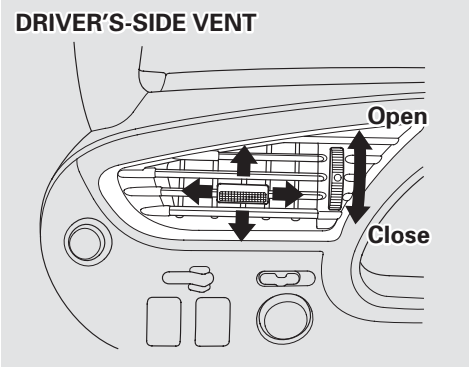

On the driver's and passenger's-side vents, move the vent up-and-down and move the tab side-to-side to adjust the air flow.

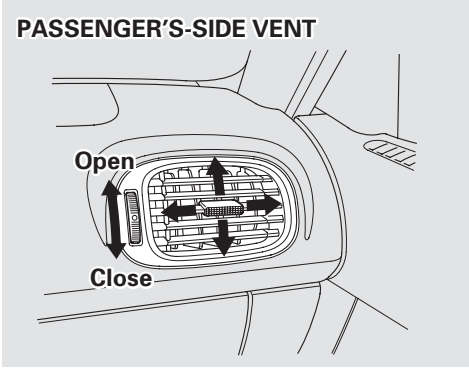

Each vent can be opened and closed with the dial next to it.

How to Use the System
This section covers how to set up the system controls for ventilation, heating, and defrosting.

The engine must be running for the heater to generate hot air. The heater uses engine coolant to warm the air. If the engine is cold, it will be several minutes before you feel warm air coming from the system. The air conditioning does not rely on engine temperature.

It is best to leave the system in Fresh Air mode under almost all conditions. Keeping the system in Recirculation mode can cause the windows to fog up. Switch to Recirculation mode when you are driving through smoky or dusty conditions, then switch back to Fresh Air mode when the condition clears.

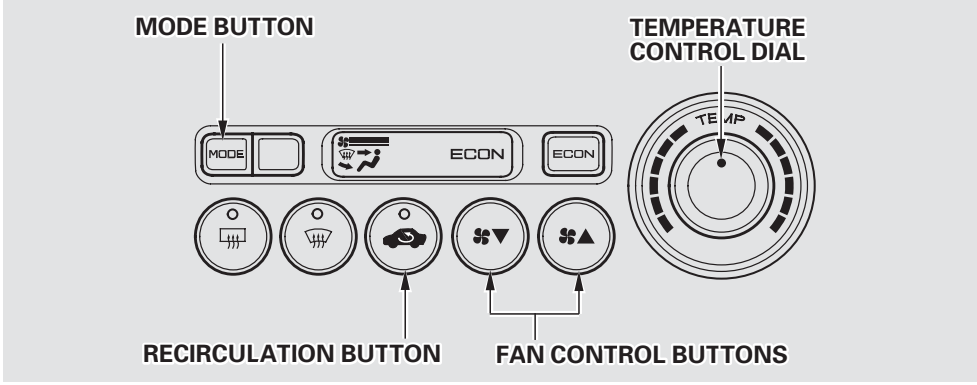

The outside air intakes for the heating system are at the base of the windshield. Keep these clear of leaves and other debris.

Ventilation
The flow-through ventilation system draws in outside air, circulates it through the interior, then exhausts it through vents near the rear window.

1. Turn the temperature control dial all the way to the left.
2. Select and Fresh Air mode.
3. Set the fan to the desired speed.

CONTINUED

To Heat
To warm the interior:

1. Start the engine.
2. Select and Fresh Air mode.
3. Set the fan to the desired speed.
4. Adjust the warmth of the air with the temperature control dial.

To Defog and Defrost
To remove fog from the inside of the windows:

1. Press the button.
2. Adjust the temperature control dial so the air flow from the defroster vents feels warm.
3. Turn on the rear window defogger to help clear the rear window.

To remove exterior frost or ice from the windshield and side windows after the car has been sitting out in cold weather:

1. Start the engine.
2. Press the button.
3. Adjust the fan and temperature controls to maximum.

To rapidly remove exterior frost or ice from the windshield (on very cold days), first select the Recirculation mode. Once the windshield is clear, select the Fresh Air mode to avoid fogging the windows.

These settings direct all the air flow to the defroster vents at the base of the windshield and the side window defroster vents. The air flow will get warmer and clear the windows faster as the engine warms up. You can close the side vents with the dial underneath each vent. This will send more warm air to the windshield defroster vents.

For safety, make sure you have a clear view through all the windows before driving away.

To Turn Everything Off

To shut off the system temporarily, stop the fan and turn the temperature control dial all the way to the left.

You should shut the system completely off only for the first few minutes of driving in cold weather, until the engine coolant warms up enough to operate the heater. Keep the fan on at all other times so stale air does not build up in the interior.

Climate Control System

The automatic climate control system in your Honda picks the proper combination of air conditioning, heating, and ventilation to maintain the interior temperature you select. The system also adjusts the fan speed and air flow levels.

The direction of air flow from the vents in the center and each side of the dashboard is adjustable.

To adjust the air flow from the center vent, move the tab up-and-down and side-to-side.
On the driver's-side vent, move the vent up-and-down and move the tab side-to-side. On the passenger's-side vent, move the tab up-and-down and move the vent side-to-side.

The side vents can be opened and closed with the dials underneath them.

CENTER VENTS

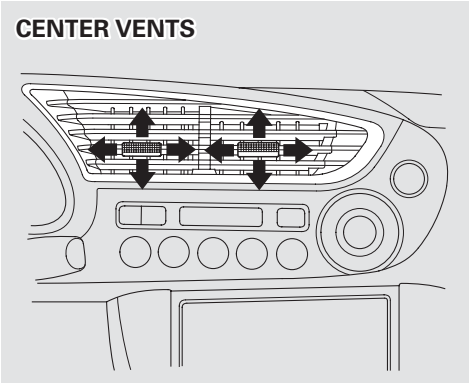

The climate control system draws air through the exterior vents at the bottom of the windshield. Keep these vents clear of leaves and other debris.

DRIVER'S-SIDE VENT

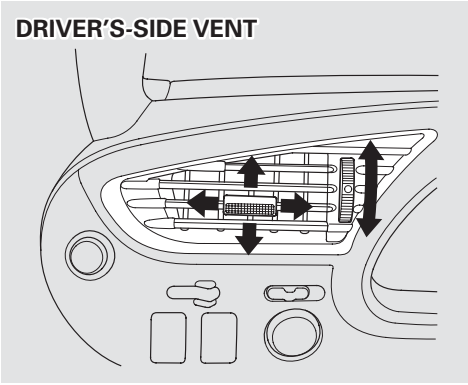

For the climate control system to provide heating and cooling, the engine must be running.

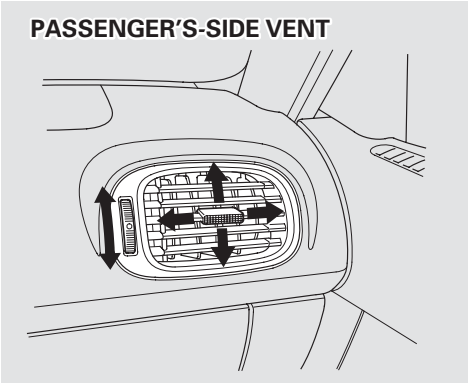
PASSENGER'S-SIDE VENT

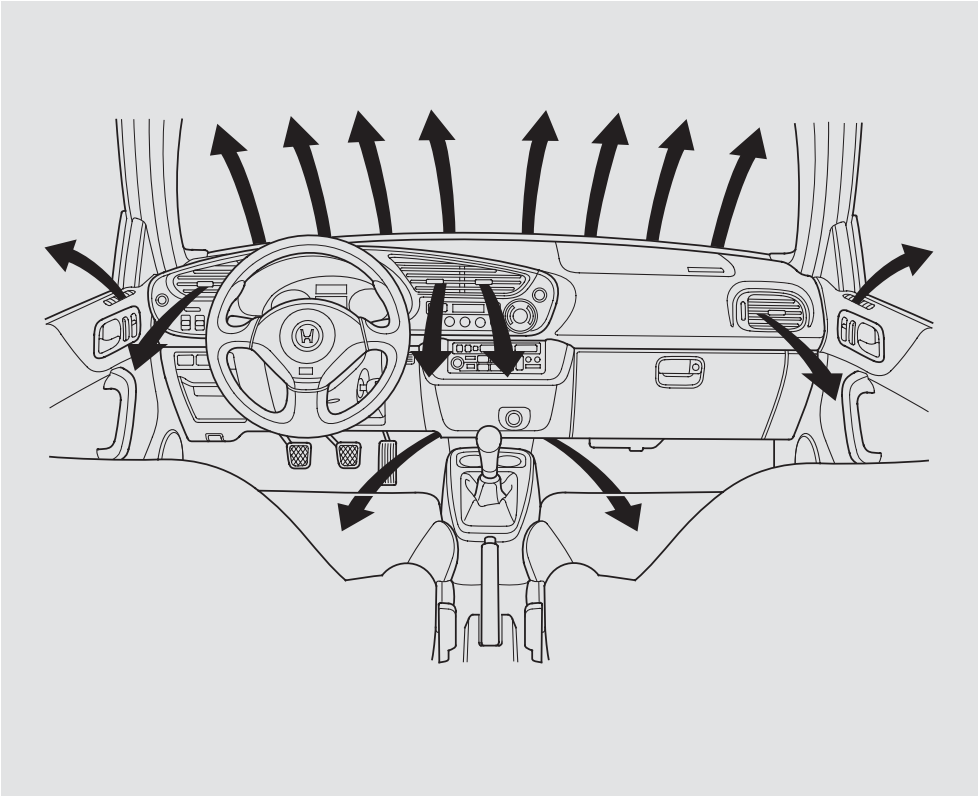

Fully-automatic Operation

Auto Button

To put the Automatic Climate Control in fully-automatic mode, press the AUTO button and set the desired temperature by turning the temperature control dial. You will see AUTO in the system's display. The light above the button also shows you which mode, Recirculation or Fresh Air, is selected.

When the system is in fully automatic mode, the auto idle stop function will not be activated.

The system automatically selects the proper mix of conditioned and/or heated air that will, as quickly as possible, raise or lower the interior temperature from its current level to the set temperature.

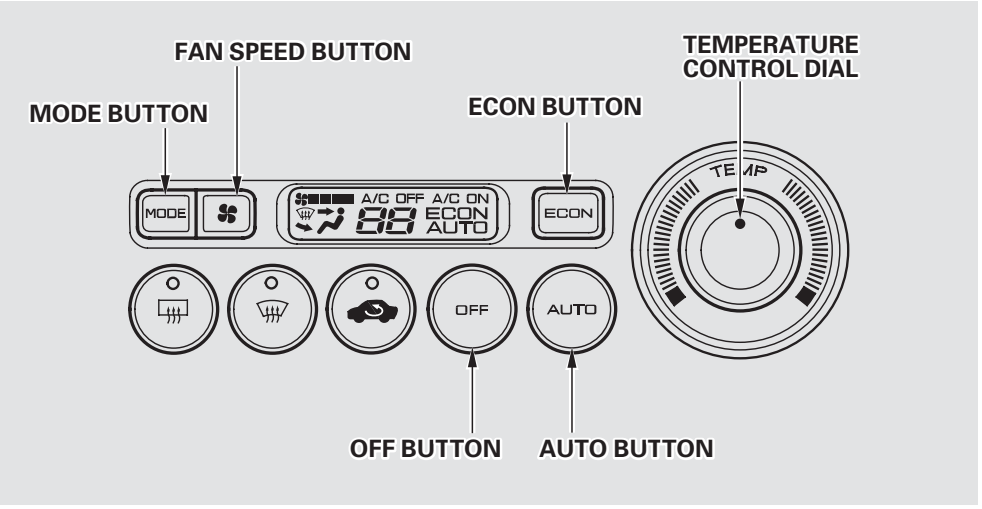

When you set the temperature to its lower limit (60°F/18°C) or its upper limit (90°F/32°C), the system runs at full cooling or heating only. It does not regulate the interior temperature. When the temperature is set between the lower and upper limits, the system regulates the interior temperature to the set value.

In cold weather, the fan will not come on automatically until the car has been driven for a short time and the heater starts to develop warm air.

Pressing the OFF button shuts the climate control system completely off. Keep the system completely off only for short periods. To keep stale air and mustiness from collecting, you should have the fan running at all times.

Semi-automatic Operation
You can manually select various functions of the Climate Control system when it is in AUTO. All other features remain automatically controlled. Making any manual selection causes the word AUTO to go out.

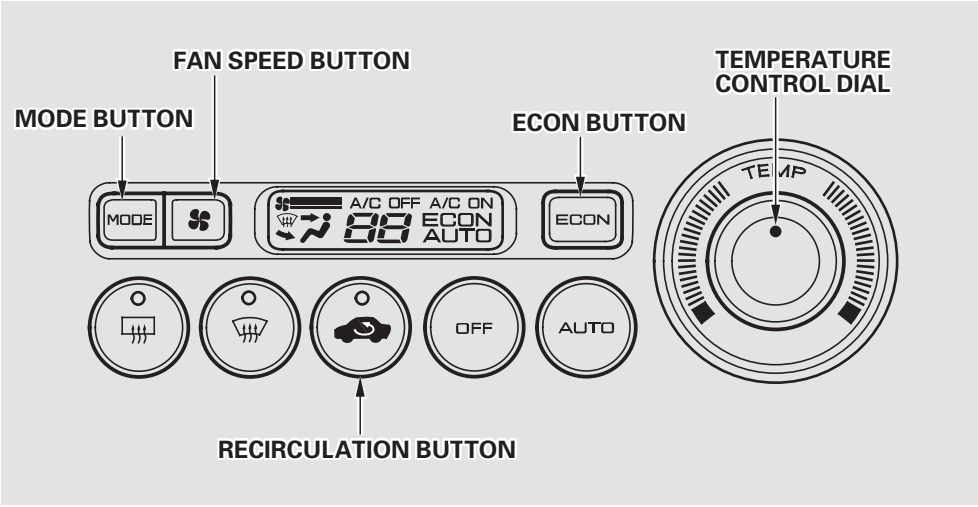

ECON Button
This button turns the air conditioning on and off. When the air conditioning is turned on with this button, the auto idle stop works only if the outside temperature is above 41°F (5°C).

If the cooling provided in ECON mode is not adequate, press the Auto button. (See page 92 .)

CONTINUED

Recirculation Button
This button controls the source of the air going into the system. When the indicator above this button is lit, air from the car's interior is sent through the system again (Recirculation mode). When the indicator is off, air is brought in from outside the car (Fresh Air mode).
You can, for example, manually put the system in recirculation mode when driving through an area of smoke or fumes.

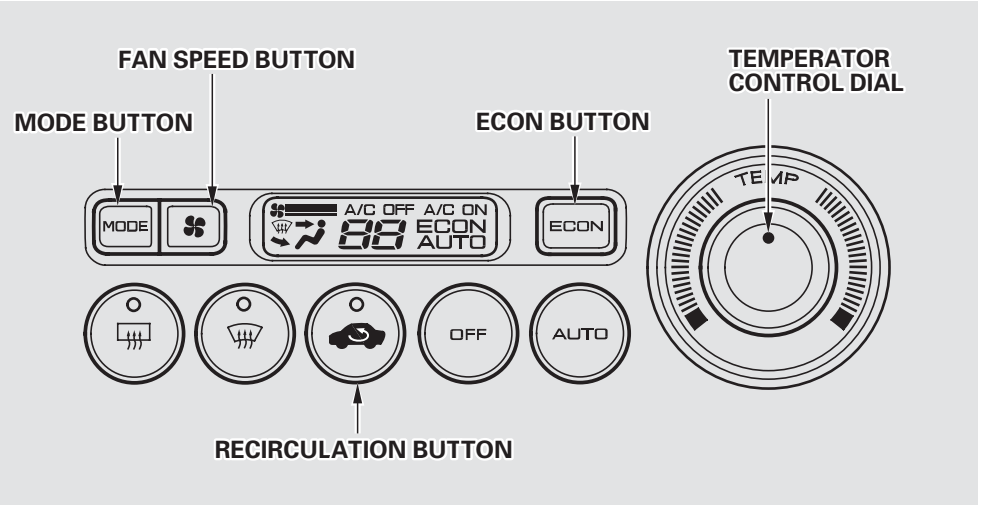

Fan Speed Button
You can manually select the fan speed with the fan speed button. Pressing the button repeatedly makes the fan run faster. The fan speed is shown by bars in the display. If the fan is at its highest speed, pressing the button again takes it to its lowest speed.

Mode Button
Use the MODE button to select the vents the air flows from. Some air will flow from the dashboard corner vents in all modes. Each time you press the MODE button, the display shows the mode selected. Press the button four times to see all the modes.

Air flow is divided between the floor vents and the defroster vents at the base of the windshield.

Air flows from the floor vents.

The main air flow is divided between the dashboard vents and the floor vents.

The main air flow comes from the dashboard vents.

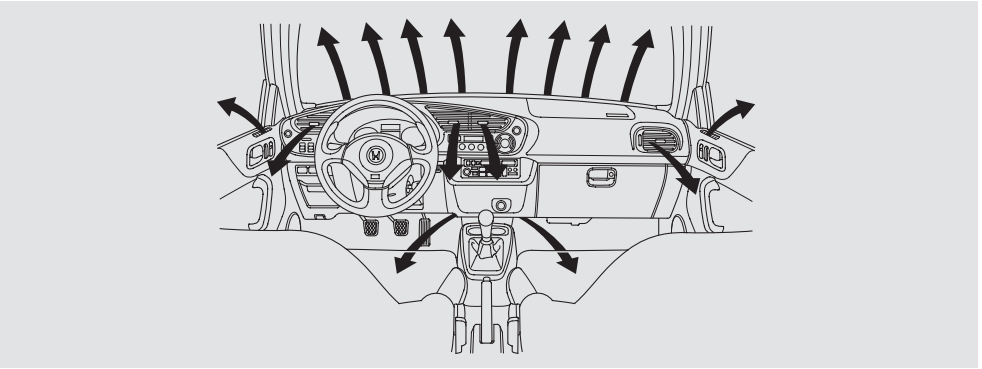

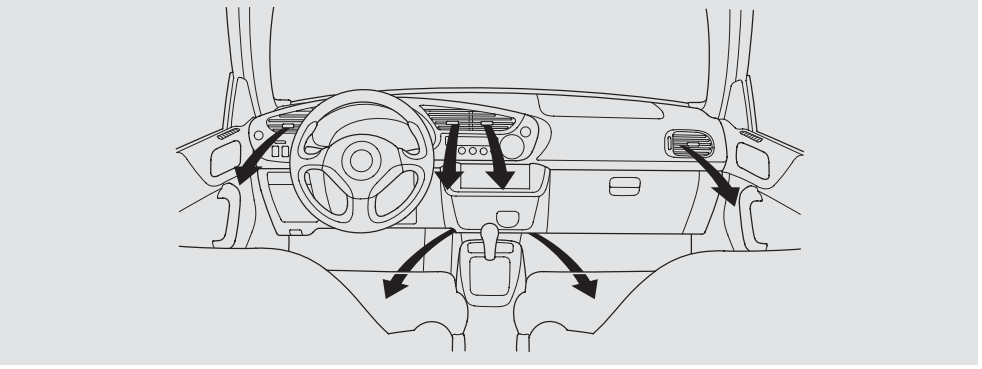

CONTINUED

The button directs the main air flow to the windshield for faster defrosting. It also overrides any MODE selection you may have made.

When you select , the A/C turns on automatically and the system selects Fresh Air mode. For faster defrosting, manually set the fan speed to high. You can also increase air flow to the windshield by closing the side vents in the dashboard.

When this mode is selected, the auto idle stop function will not activate.

When you turn off by pressing the button again, the system returns to its former settings.

Rear Window Defogger Button
This button turns the rear window defogger on and off (see pages 65 and 66).

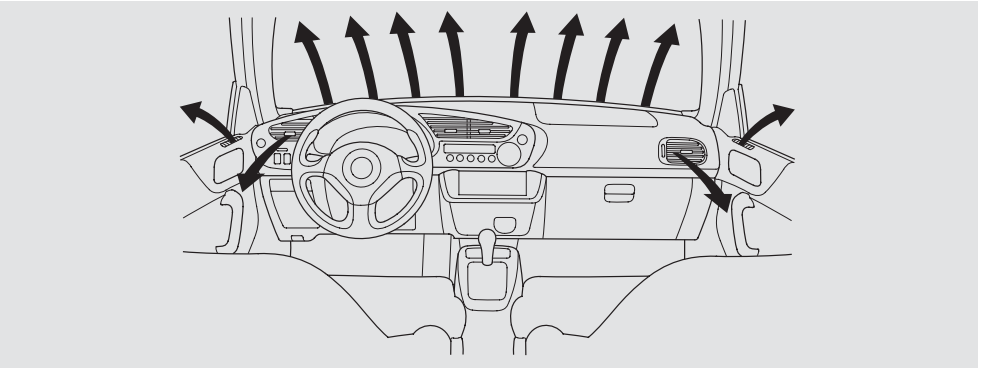

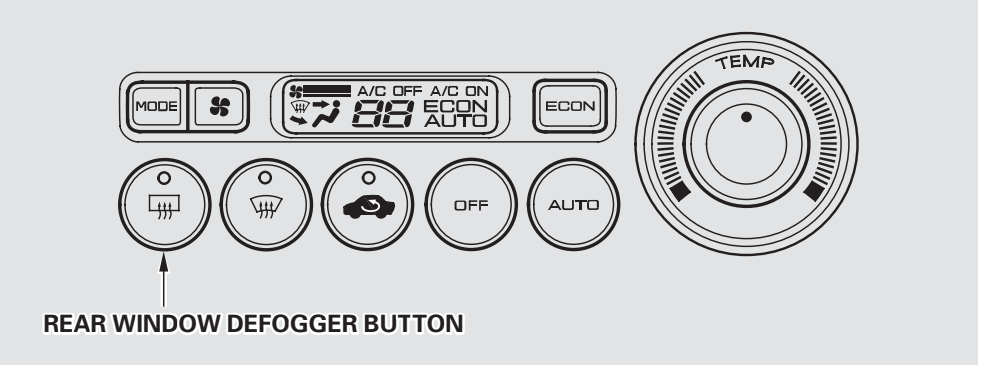

Sunlight Sensor/Temperature Sensor

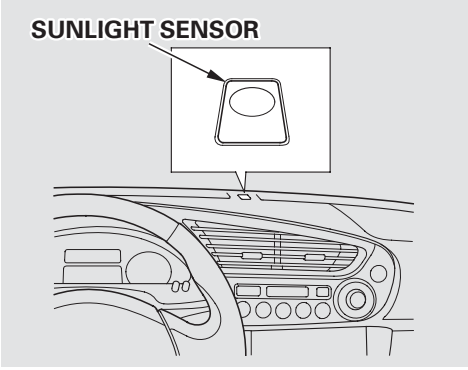

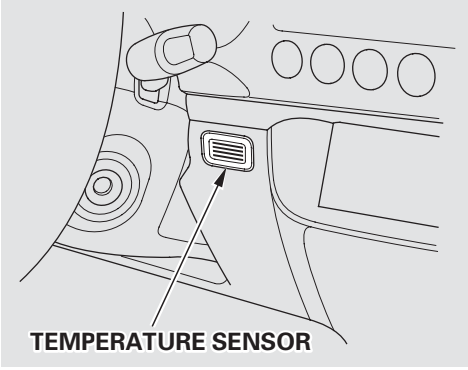

The climate control system has two sensors. A sunlight sensor is located in the top of the dashboard and a temperature sensor is next to the steering column. Do not cover the sensors or spill any liquid on them.

AM/FM/Cassette Stereo Audio System

Your Honda's audio system provides clear reception on both AM and FM bands, while the preset buttons allow you to easily select your favorite stations.

The cassette system features Dolby* noise reduction, automatic sensing of chromium-dioxide (CrO_2) tape, and auto-reverse for continuous play.

* Dolby noise reduction manufactured under license from Dolby Laboratories Licensing Corporation. "DOLBY" and the double-D symbol DD are trademarks of Dolby Laboratories Licensing Corporation.

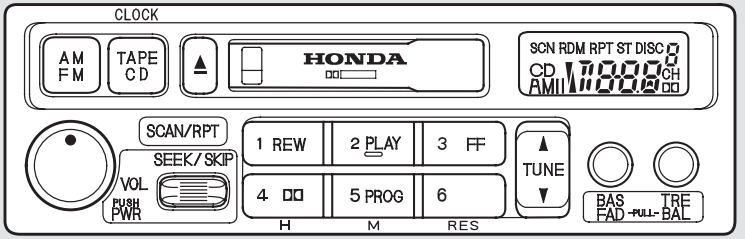

Operating the Radio
The ignition switch must be in ACCESSORY (I) or ON (II) to operate the audio system. Turn the system on by pushing the PWR/VOL knob.
Adjust the volume by turning the PWR/VOL knob.

The band and frequency that the radio was last tuned to is displayed. To change bands, press the AM/FM button. On the FM band, ST will be displayed if the station is broadcasting in stereo. Stereo reproduction on AM is not available.

You can use any of four methods to find radio stations on the selected band: TUNE, SEEK, SCAN or the Preset buttons.

TUNE — Use the TUNE bar to tune the radio to a desired frequency. Press the upper part (▲) to tune to a higher frequency, or the lower part (▼) to tune to a lower frequency. The frequency numbers will start to change rapidly. Release the bar when the display reaches the desired frequency. To change the frequency in small increments, press and release the TUNE bar quickly.

SEEK — The SEEK function searches the band for a station with a strong signal. To activate it, push the SEEK switch up or down, then release it. Depending on which way you push the switch, the system scans upward or downward from the current frequency. It stops when it finds a station with a strong signal.

CONTINUED

SCAN — The SCAN function samples all the stations with strong signals on the selected band. To activate it, press the SCAN button, then release it. When the system is in the SCAN mode, SCN shows in the display. The system will scan up the band for a station with a strong signal. When it finds one, it will stop and play that station for approximately five seconds. If you do nothing, the system will then scan for the next strong station and play that for five seconds. When it plays a station that you want to continue listening to, press the SCAN button again.

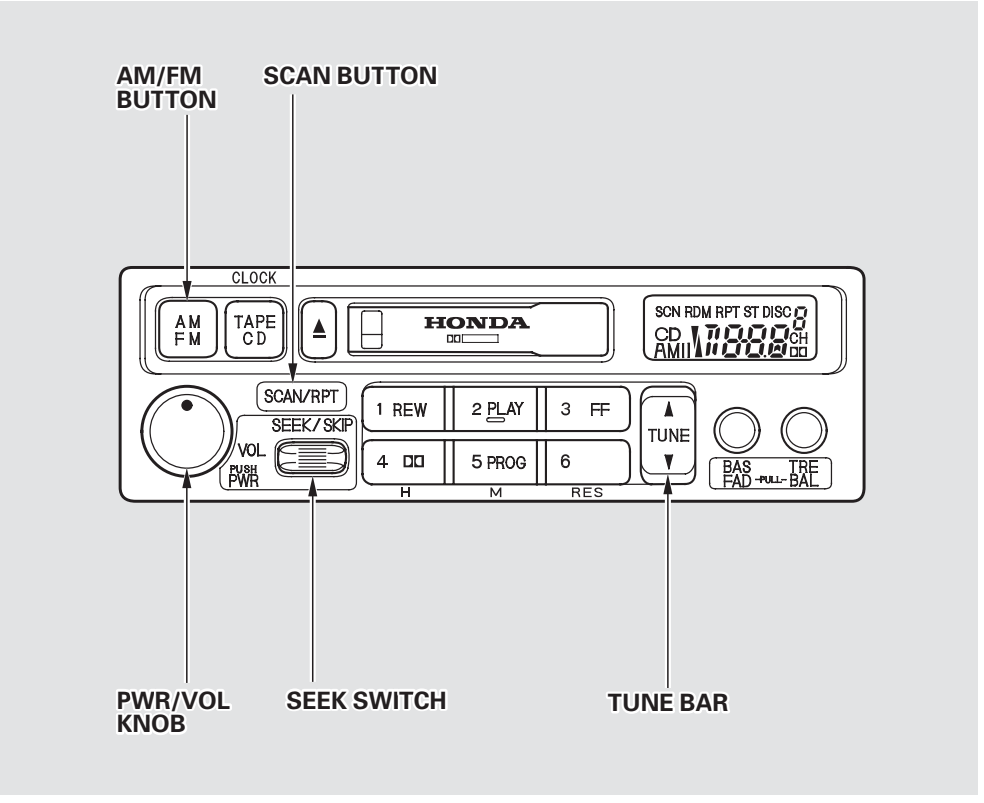

Preset — You can store the frequencies of your favorite radio stations in the six preset buttons. Each button will store one frequency on the AM band, and two frequencies on the FM band.

To store a frequency:

1. Select the desired band, AM or FM. FM1 and FM2 let you store two frequencies with each Preset button.

2. Use the TUNE or SEEK function to tune the radio to a desired station.

3. Pick the Preset button you want for that station. Press the button and hold it until you hear a beep.

4. Repeat steps 1 to 3 to store a total of six stations on AM and twelve on FM.

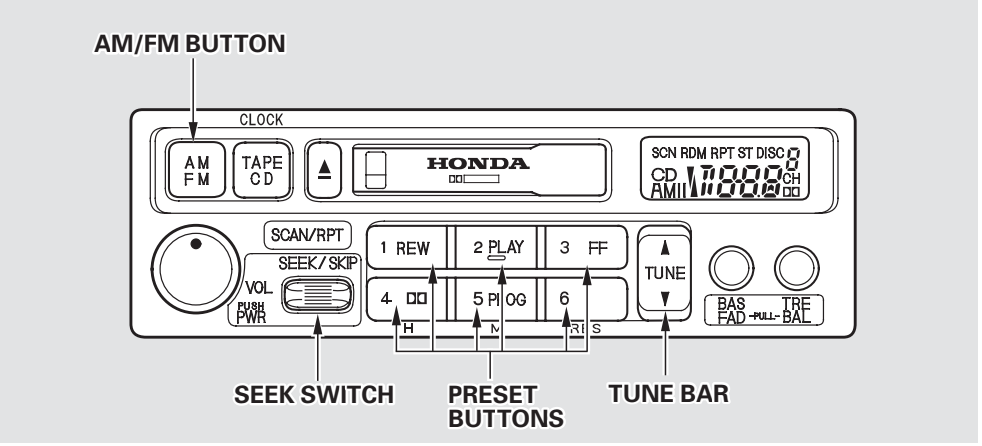

Once a station's frequency is stored, simply press and release the proper preset button to tune to it.

The preset frequencies will be lost if your car's battery goes dead, is disconnected, or the radio fuse is removed.

Adjusting the Sound Balance/Fader — These two controls adjust the strength of the sound coming from each speaker. The Balance control adjusts the side-to-side strength, while the Fader control adjusts the front-to-back strength.

To adjust the fader, push on the BASS/FADER control knob to get it to pop out. Pull it out slightly farther, and adjust the front-to-back sound to your liking. Push the knob back in when you are done so you cannot change the setting by accidentally bumping it.

To adjust the balance, push on the TREBLE/BALANCE control knob to get it to pop out. Pull it out slightly farther, and adjust the side-to-side sound to your liking. Push the knob back in when you are done so you cannot change the setting by accidentally bumping it.

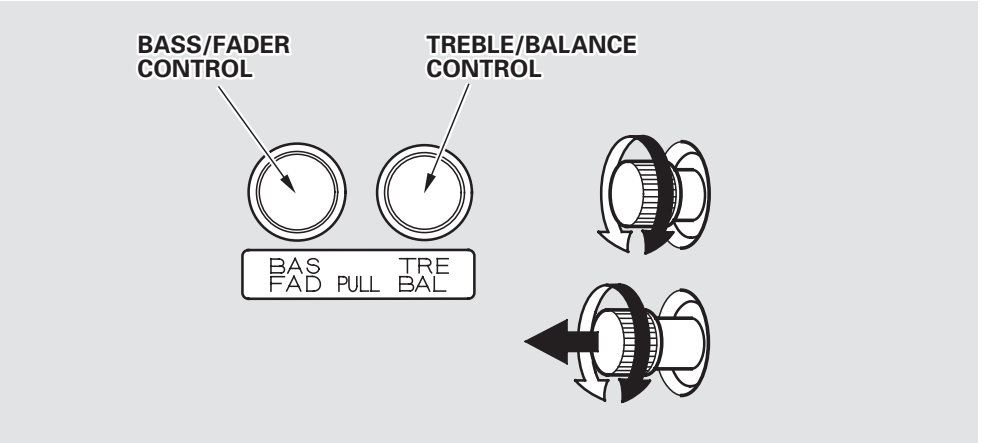

Treble/Bass — Use these controls to adjust the tone to your liking.

To adjust the Treble level, push on the TREBLE/BALANCE control knob to get it to pop out. Without pulling it out farther, turn the knob to adjust the treble level. Push the knob back in when you are done so you cannot change the setting by accidentally bumping it.

To adjust the Bass level, push on the BASS/FADER control knob to get it to pop out. Without pulling it out farther, turn the knob to adjust the bass level. Push the knob back in when you are done so you cannot change the setting by accidentally bumping it.

Radio Frequencies and Reception
For information, See page 112 .

Audio System Lighting
You can use the instrument panel brightness control buttons to adjust the illumination of the audio system (see page 62). The audio system illuminates when the parking lights are on, even if the radio is turned off.

Digital Clock
The audio system usually shows the time when the ignition switch is in ACCESSORY (I) or ON (II). It shows the operation mode of the radio, cassette player, or optional CD changer when you operate them, then goes back to the time display after five seconds.
If an error occurs while operating the optional CD changer, the display will keep showing the error code and will not switch to the time display until the error is corrected (see page 116).

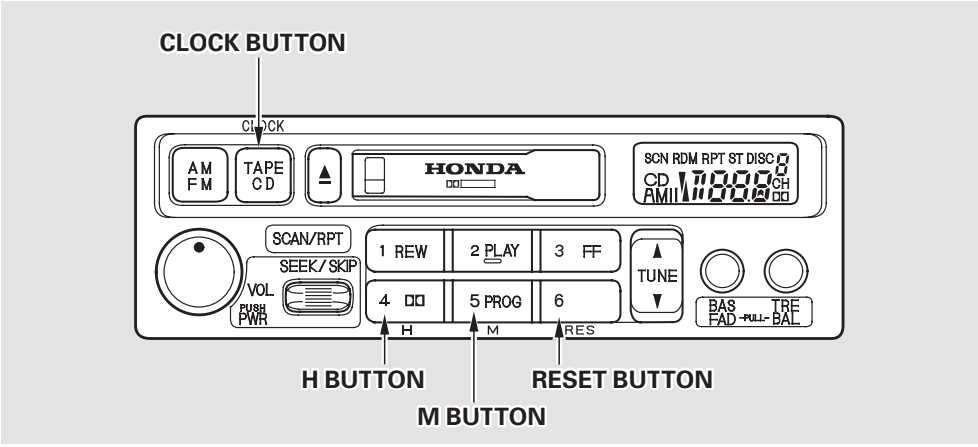

To set the time, press the CLOCK (TAPE/CD) button for more than two seconds. To set the hours, press the H (Preset 4) button. The hour numbers will begin blinking. Keep pressing the button until the numbers advance to the desired time.

To set the minutes, press the M (Preset 5) button. The minutes numbers will begin blinking. Keep pressing the button until the numbers advance to the desired time.

CONTINUED

You can use the RESET (Preset 6) button to quickly set the time to the nearest hour. If the displayed time is before the half hour, pressing RESET sets the clock back to the previous hour. If the displayed time is after the half hour, pressing RESET sets the clock forward to the beginning of the next hour.
For example:
- 1:06 would RESET to 1:00
- 1:52 would RESET to 2:00

The blinking stops and the time is set when you press any buttons other than the time setting buttons (Presets 4, 5 and 6).

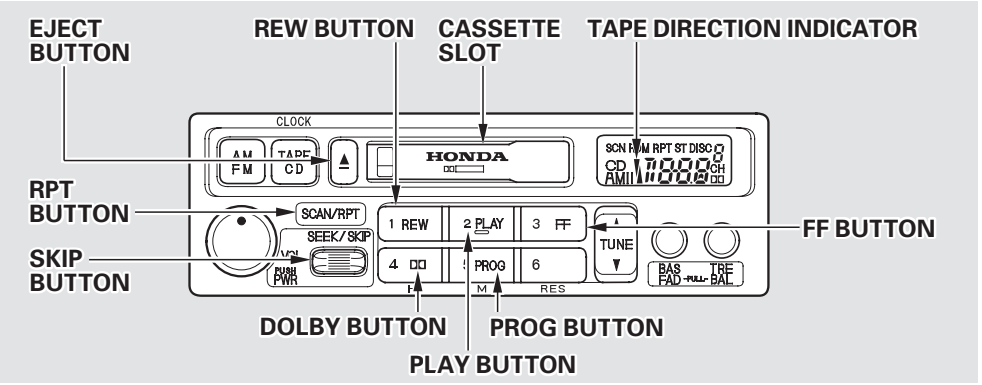

Operating the Cassette Player
Turn the audio system ON. Make sure the tape opening on the cassette is facing to the right, then insert the cassette most of the way into the slot. The system will pull it in the rest of the way, and begin to play.

The tape direction indicator will light to show you which side of the cassette is playing. The ▲ indicates the side you inserted facing upward is now playing. If you want to play the other side, press the PROG button.

Dolby noise reduction turns on when you insert a cassette. If the tape was not recorded with Dolby noise reduction, turn it off by pressing the DD button.

When the system reaches the end of the tape, it will automatically reverse direction and play the other side. If you want to remove the cassette from the drive, press the EJECT button.

Tape Search Functions
With a cassette playing, you can use the FF, REW, SKIP, or REPEAT function to find a desired program.

FF/REW — Fast Forward and Rewind move the tape rapidly. To rewind the tape, push the REW button. You will see REW in the display. To fast forward the tape, push the FF button. You will see FF displayed. Press the PLAY button to take the system out of rewind or fast forward. If the system reaches the end of the tape while in fast forward or rewind, it automatically stops that function, reverses direction, and begins to play.

SKIP — The Skip Function allows you to find the beginning of a song or passage. To find the beginning of the song or passage currently playing, push the SKIP switch down. You will see REW flashing in the display as the tape rewinds. To find the beginning of the next song, push the SKIP switch up. You will see FF flashing in the display as the tape fast forwards. When the system finds the beginning of a song or passage, it goes back to PLAY mode.

CONTINUED

REPEAT — The Repeat function continuously replays the current song or passage. Press the RPT button to activate it; you will see RPT displayed as a reminder. When the system reaches the end of the song or passage currently playing, it will automatically go into rewind. When it senses the beginning of the same song or passage, the system returns to PLAY mode. It will continue to repeat this same program until you deactivate REPEAT by pressing the button again.

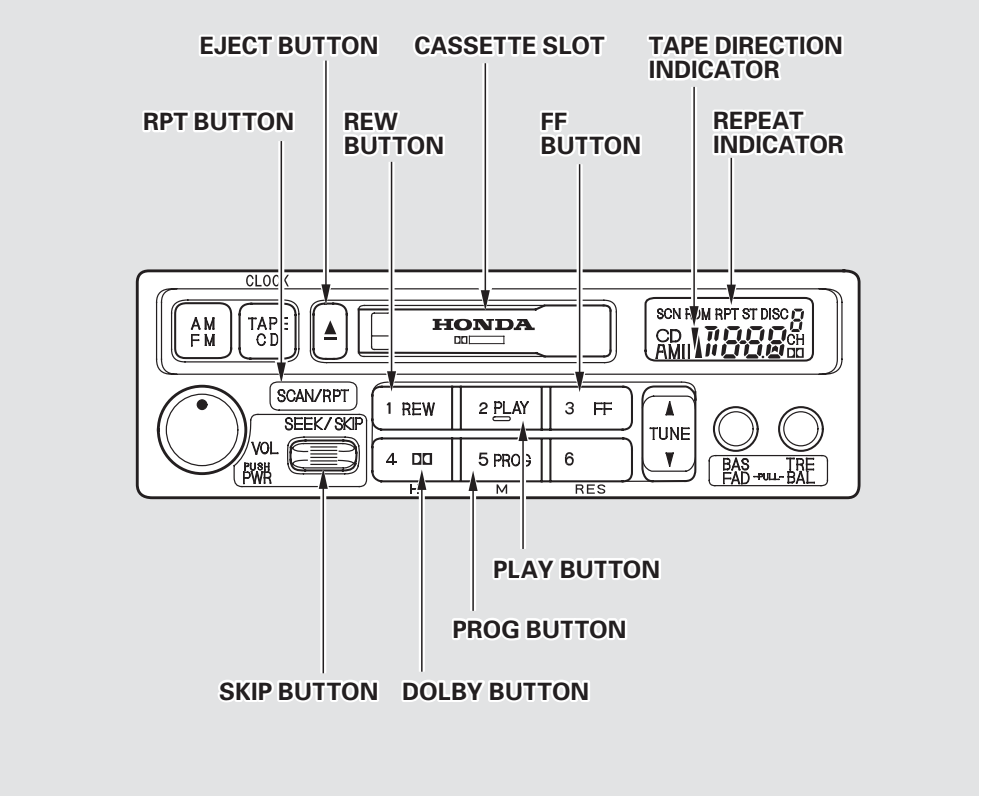

The SKIP and REPEAT functions use silent periods on the tape to find the end of a song or passage. These features may not work to your satisfaction if there is almost no gap between selections, a high noise level between selections, or a silent period in the middle of a selection.

Caring for Cassettes
Damaged cassettes can jam inside the drive or cause other problems. See page 118 for information on cassette care and protection.

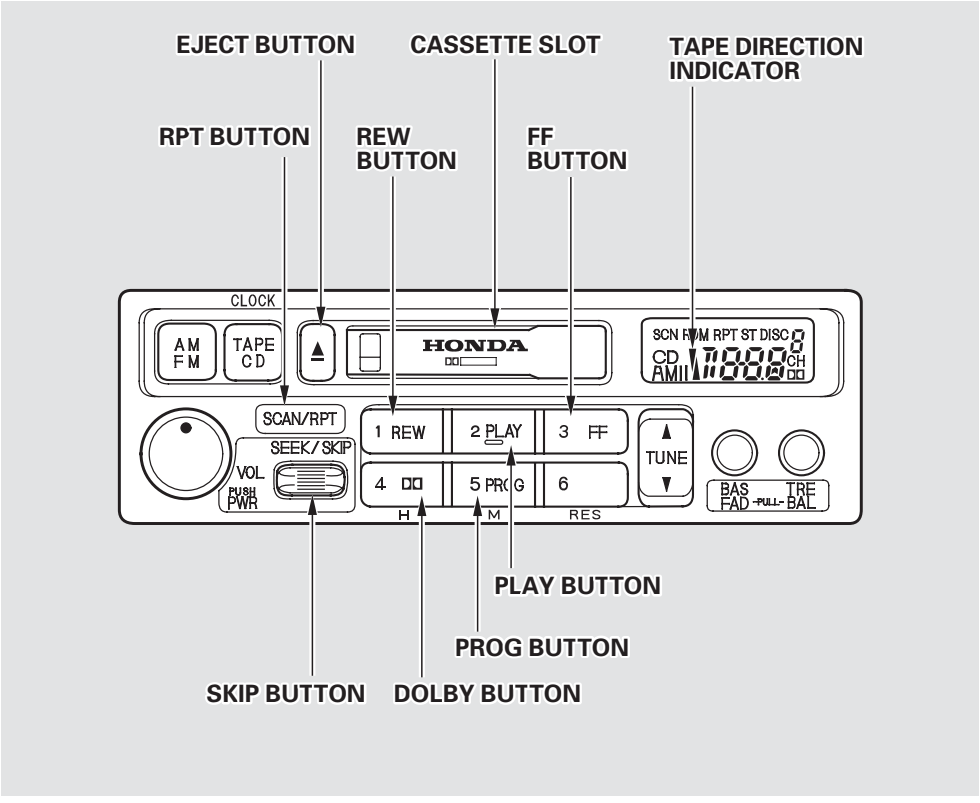

Operating the Optional CD Player/Changer

A Compact Disc changer is available from your dealer. It holds up to six discs, providing several hours of continuous entertainment. You operate the CD changer with the same controls used for the radio and cassette player.

Your dealer also has an accessory in-dash single CD player available that is operated by the radio controls. To operate this unit, use the instructions (except for those relating to multiple discs) in this section.

Using the instructions that came with the changer, load the desired CDs in the magazine, and load the magazine in the changer. Play only standard round discs. Odd-shaped CDs may jam in the drive or cause other problems.

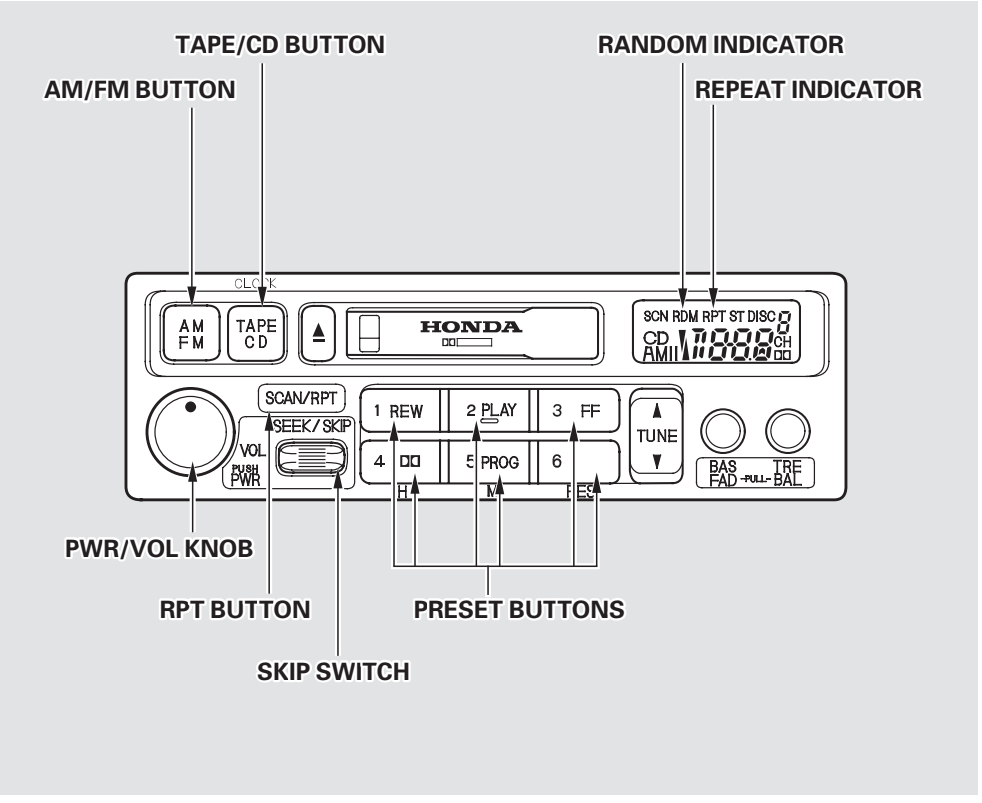

To operate the CD changer or player, the ignition must be in ACCESSORY (I) or ON (II) and the audio system must be on.

Press the CD button until “CD” appears in the display. The system will start to play the first track of the first disc in the magazine. Play only standard round discs.

When that disc ends, the next disc in the magazine is loaded and played. After the last disc finishes, the system returns to disc 1.

To select a different disc, press the appropriate preset button (1–6). If you select an empty slot in the magazine, the changer will, after finding that slot empty, try to load the CD in the next slot. This continues until it finds a CD to load and play.

You can use the SKIP switch to select tracks within a disc. If you push and release the SKIP switch, the system will move to the beginning of a track. Push the switch up to move to the beginning of the next track, and push the switch down to move to the beginning of the current track.

If you push and hold the SKIP switch, you will hear a beep and the system will continue to move across tracks. Release the switch when you think it has reached the desired place on the disc.

REPEAT – When you activate the Repeat feature by pressing the RPT button, the system continuously replays the current track. You will see RPT in the display as a reminder. Press the RPT button again to turn it off.

RANDOM PLAY – This feature, when activated, plays the tracks on a CD in random order, rather than in the order they are recorded on the CD. To activate Random Play, press and hold the RPT button until you see RDM in the display. The system will then select and play tracks randomly on the current disc. When all tracks on that disc have been played, the next disc is loaded and played randomly. This continues until you deactivate Random Play by pressing RPT again.

CONTINUED

If the system is in Repeat mode, you must turn it off by pressing RPT before you can select Random Play. Then press the button again until you see RDM displayed.

To take the system out of CD mode, press the AM/FM button or insert a cassette in the player. If a tape is already in the cassette player, press the TAPE button. When you return to CD mode, play will continue at the same disc and track.

If you turn the system off while a CD is playing, either with the PWR/VOL knob or the ignition switch, play will continue at the same disc and track when you turn it back on.

Protecting Compact Discs
For information on how to handle and protect compact discs, see page 115.

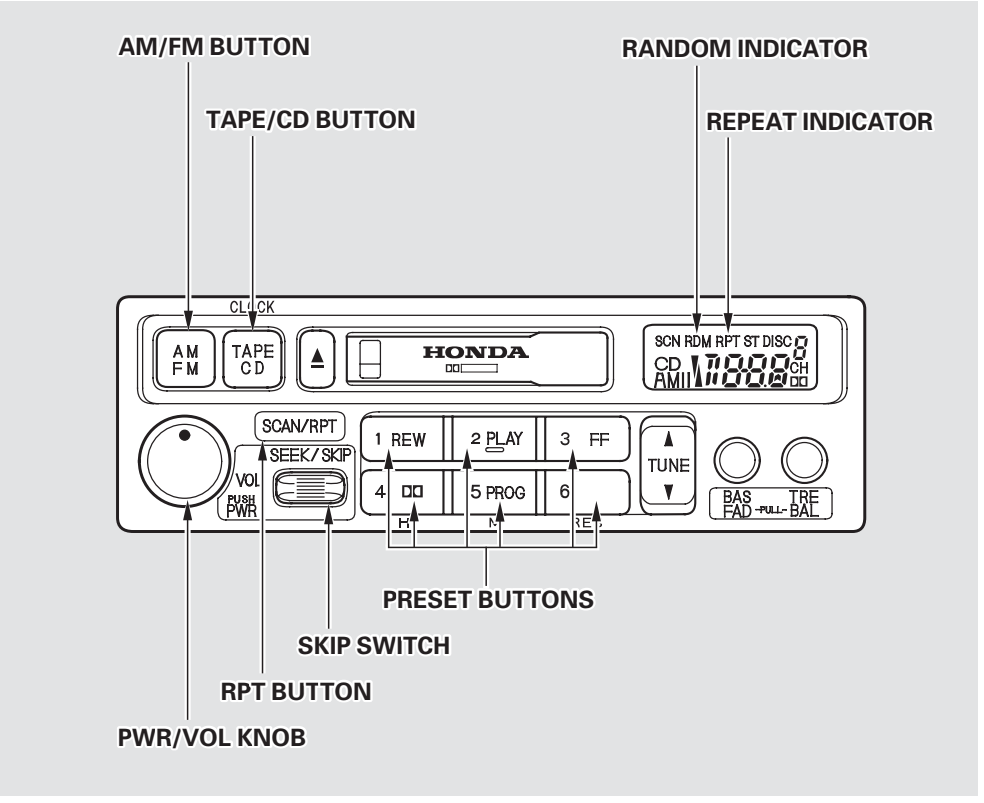

CD Changer Error Indications
If you see an error indication in the display while operating the CD changer, find the cause in the chart to the right. If you cannot clear the error indication, take the car to your Honda dealer.

Indication	Cause	Solution
E01	Disc-changer malfunction.	If the code disappears within a few seconds, unit is OK. Press the magazine eject button and pull out the magazine, check for error indication. Insert the magazine again. If the code does not disappear or the magazine cannot be pulled out, consult your Honda dealer.
	CD magazine ejection impossible.	Press the magazine eject button. If the magazine does not eject, consult your Honda dealer.
E02	Disc is in changer mechanism.	Press the magazine eject button, and insert an empty magazine.
--- H	High temperature.	Will disappear when the temperature returns to normal.
EEE	Misconnection or disconnection of CD changer.	See your Honda dealer.
--- -	No CD magazine in the CD changer.	Insert CD magazine.
000	No CD in magazine.	Insert CD in magazine.

Radio Frequencies
Your Honda's radio can receive the complete AM and FM bands. Those bands cover these frequencies:

AM band:
530 to 1,710 kilohertz
FM band:
87.7 to 107.9 megahertz

Radio stations on the AM band are assigned frequencies at least ten kilohertz apart (530, 540, 550). Stations on the FM band are assigned frequencies at least 0.2 megahertz apart (87.9, 88.1, 88.3).

Stations must use these exact frequencies. It is fairly common for stations to round-off the frequency in their advertising, so your radio could display a frequency of 100.9 even though the announcer may identify the station as "FM101."

Radio Reception
How well your Honda's radio receives stations is dependent on many factors, such as the distance from the station's transmitter, nearby large objects, and atmospheric conditions.

A radio station's signal gets weaker as you get farther away from its transmitter. If you are listening to an AM station, you will notice the sound volume becoming weaker, and the station drifting in and out. If you are listening to an FM station, you will see the stereo indicator flickering off and on as the signal weakens. Eventually, the stereo indicator will go off and the sound will fade completely as you get out of range of the station's signal.

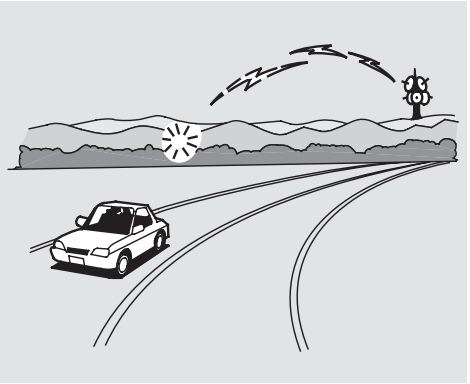

Driving very near the transmitter of a station that is broadcasting on a frequency close to the frequency of the station you are listening to can also affect your radio's reception. You may temporarily hear both stations, or hear only the station you are close to.

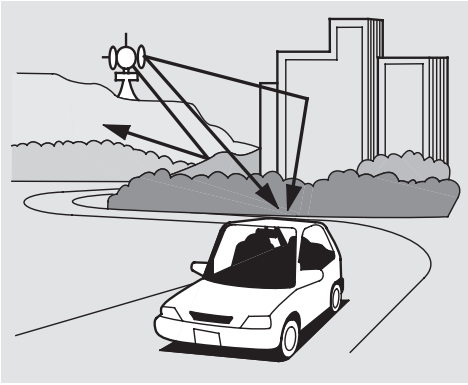

Radio signals, especially on the FM band, are deflected by large objects such as buildings and hills. Your radio then receives both the direct signal from the station's transmitter, and the deflected signal. This causes the sound to distort or flutter. This is a main cause of poor radio reception in city driving.

Radio reception can be affected by atmospheric conditions such as thunderstorms, high humidity, and even sunspots. You may be able to receive a distant radio station one day and not receive it the next day because of a change in conditions.

Electrical interference from passing vehicles and stationary sources can cause temporary reception problems.

As required by the FCC:
Changes or modifications not expressly approved by the party responsible for compliance could void the user's authority to operate the equipment.

Operating the CD Changer (Optional)
A Compact Disc changer is available for your vehicle. It holds up to six discs, providing several hours of continuous entertainment. You operate this CD changer with the same controls used for the in-dash CD player.

Load the desired CDs in the magazine and load the magazine in the changer according to the instructions that came with the unit. Play only standard round discs. Odd-shaped CDs may jam in the drive or cause other problems.

For best results when using CD-R discs, use only high quality discs labeled for audio use. When recording a CD-R, the recording must be closed in order for the disc to be used by CD players. CD-RW discs will not work in this unit.

To select the CD changer, press the CD button. The disc and track numbers will be displayed.

To select a different disc, press the appropriate preset button (1—6). If you select an empty slot in the magazine, the changer will, after finding that slot empty, try to load the CD in the next slot. This continues until it finds a CD to load and play.

If you load a CD in the in-dash player while the changer is playing a CD, the system will stop the changer and begin playing the in-dash CD. To select the changer again, press the CD button. Play will begin where it left off. Use the CD button to switch between the player and the changer.

If you eject the in-dash CD while it is playing, the system will automatically switch to the CD changer and begin play where it left off. If there are no CDs in the changer, the display will flash. You will have to select another mode (AM or FM) with the button.

When you switch back to CD mode, the system selects the same unit (in-dash or changer) that was playing when you switched out of CD mode.

To use the SKIP, REPEAT, and RANDOM functions, refer to the in-dash player operating instructions.

Protecting Compact Discs

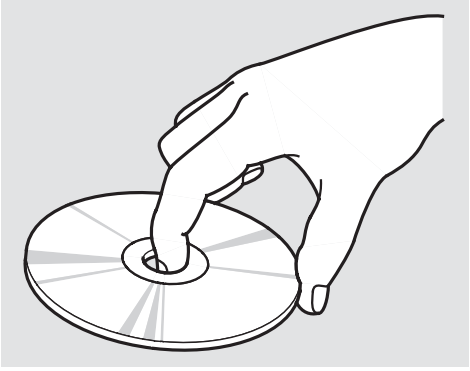

Handle a CD by its edges; never touch either surface. Do not place stabilizer rings or labels on the CD. These, along with contamination from fingerprints liquids, and felt-tip pens, can cause the CD to not play properly, or possibly jam in the drive.

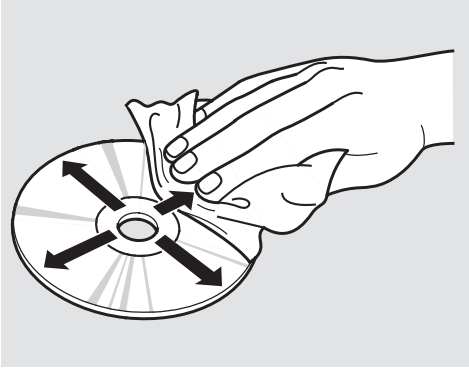

When a CD is not being played, store it in its case to protect it from dust and other contamination. To prevent warpage, keep CDs out of direct sunlight and extreme heat.

To clean a disc, use a clean soft cloth. Wipe across the disc from the center to the outside edge.

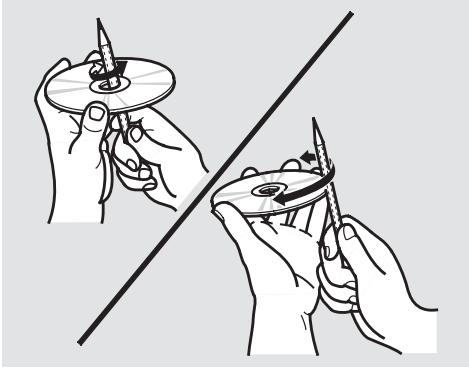

A new CD may be rough on the inner and outer edges. The small plastic pieces causing this roughness can flake off and fall on the recording surface of the disc, causing skipping or other problems. Remove these pieces by rubbing the inner and outer edges with the side of a pencil or pen.

Never try to insert foreign objects in the CD player or the magazine.

CD Player Error Indications
If you see an error indication in the display while operating the CD player, find the cause in the chart to the right. If you cannot clear the error indication, take the car to your Honda dealer.

Indication	Cause	Solution
Cd E-00	System Error FOCUS Error	Press the EJECT button and pull out the disc. Check if the disc is inserted correctly in the CD player. Make sure the disc is not scratched or damaged.
Cd E-01	Mechanical Error	Press the EJECT button and pull out the disc. Check the disc for damage or deformation. If the CD cannot be pulled out or the error indication does not disappear after the disc is ejected, see your Honda dealer. Do not try to force the disc out of the player.
Cd E-02	Communication Error LSI Error	Consult your Honda dealer.

CD Changer Error Indications
If you see an error indication in the display while operating the CD changer, find the cause in the chart to the right. If you cannot clear the error indication, take the car to your Honda dealer.

Indication	Cause	Solution
Cd 0 DISC E-00	System Error FOCUS Error	Press the magazine eject button and pull out the magazine, check for error indication. Insert the magazine again. If the code does not disappear or the magazine cannot be pulled out, consult your Honda dealer.
Cd 0 DISC E-01	Mechanical Error	Press the magazine eject button and pull out the magazine, check for error indication. Insert the magazine again. If the code does not disappear or the magazine cannot be pulled out, consult your Honda dealer.
Cd 0 DISC E-02	Communication Error LSI Error	See your Honda dealer.
Cd 0 DISC --H	High temperature.	Will disappear when the temperature returns to normal.
Cd 0 DISC ---	No CD magazine in the CD changer.	Insert CD magazine.
	No CD in the CD magazine	Insert CD.

Caring for the Cassette Player
The cassette player picks up dirt and oxides from the tape. This contamination builds up over time and causes the sound quality to degrade. To prevent this, you should clean the player after every 30 hours of use. Your dealer has a cleaning kit available.

If you do not clean the cassette player regularly, it may eventually become impossible to remove the contamination with a normal cleaning kit.

Use 100-minute or shorter cassettes. Cassettes longer than that use thinner tape that may break or jam the drive.

Look at the cassette before you insert it. If the tape is loose, tighten it by turning a hub with a pencil or your finger.

If the label is peeling off, remove it from the cassette or it could cause the cassette to jam in the player. Never try to insert a warped or damaged cassette in the player.

When they are not in use, store cassettes in their cases to protect them from dust and moisture. Never place cassettes where they will be exposed to direct sunlight, high heat, or high humidity. If a cassette is exposed to extreme heat or cold, let it reach a moderate temperature before inserting it in the player.

Never try to insert foreign objects into the cassette player.

If you see the error indication " TAPE " on the display, press the EJECT button and remove the cassette from the unit. Make sure the tape is not damaged. If the cassette will not eject or the error indication stays on after the cassette ejects, take the vehicle to your Honda dealer.

If a problem develops in the connection between the cassette player and the radio, you will see " TEEE " in the display. Take the vehicle to your Honda dealer.

Before you begin driving your Honda, you should know what gasoline to use, and how to check the levels of important fluids. You also need to know how to properly store luggage or packages. The information in this section will help you. If you plan to add any accessories to your car, please read the information in this section first.

Break-in Period 120
Gasoline 120
Service Station Procedures 121
Filling the Fuel Tank..... 121
Opening the Hood 122
Oil Check 124
Engine Coolant Check 125
Fuel Economy 126
Vehicle Condition 126
Driving Habits..... 126
Accessories and Modifications 128
Carrying Cargo 130
Load Limit 131

Break-in Period
Help assure your car's future reliability and performance by paying extra attention to how you drive during the first 600 miles (1,000 km). During this period:

- Avoid full-throttle starts and rapid acceleration.
- Avoid hard braking. New brakes need to be broken-in by moderate use for the first 200 miles (300 km).

Do not change the oil until the recommended time or mileage interval shown in the maintenance schedule.

You should follow these same recommendations with an overhauled or exchanged engine, or when the brakes are relined.

Gasoline
Your Honda is designed to operate on unleaded gasoline with a pump octane number of 87 or higher. Use of a lower octane gasoline can cause a persistent, heavy metallic rapping noise in the engine that can lead to mechanical damage.

We recommend gasolines containing detergent additives that help prevent fuel system and engine deposits.

Using gasoline containing lead will damage your car's emissions controls. This contributes to air pollution.

In Canada, some gasolines contain an octane-enhancing additive called MMT. If you use such gasolines, your emission control system performance may deteriorate and the Malfunction Indicator Lamp on your instrument panel may turn on. If this happens, contact your authorized Honda dealer for service.

Filling the Fuel Tank

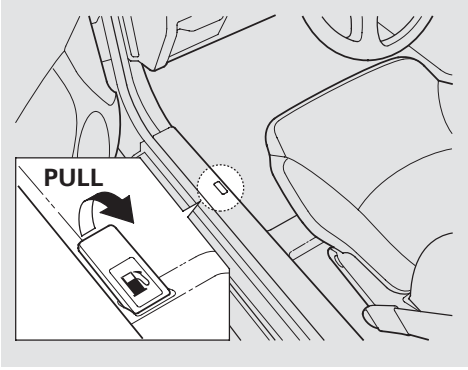

1. Because the fuel fill cap is on the passenger's side of the car, park with that side closest to the service station pumps.

2. Open the fuel fill door by pulling on the handle to the left of the driver's seat.

⚠ WARNING

Gasoline is highly flammable and explosive. You can be burned or seriously injured when handling fuel.

- Stop the engine and keep heat, sparks, and flame away.
- Handle fuel only outdoors.
- Wipe up spills immediately.

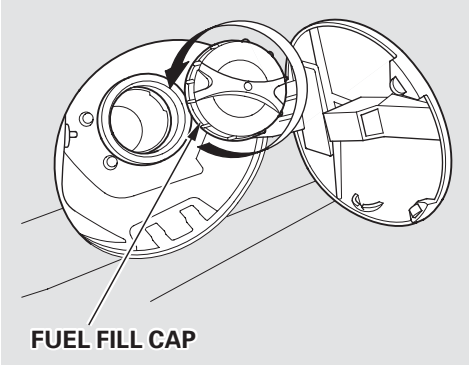

3. Remove the fuel fill cap slowly. You may hear a hissing sound as pressure inside the tank escapes.

4. Stop filling the tank after the fuel nozzle automatically clicks off. Do not try to "top off" the tank, leave some room for the fuel to expand with temperature changes.

   Your car has an on-board refueling vapor recovery system to help keep fuel vapors from going into the atmosphere. If the fuel nozzle keeps clicking off even though the tank is not full, there may be a problem with this system. Consult your dealer.

CONTINUED

5. Screw the fuel fill cap back on, tighten it until it clicks several times. If you do not properly tighten the cap, the Malfunction Indicator Lamp may come on (see page 230).

6. Push the fuel fill door closed until it latches.

Opening the Hood

1. Shift to Park or Neutral and set the parking brake. Pull the hood release handle located under the lower left corner of the dashboard. The hood will pop up slightly.

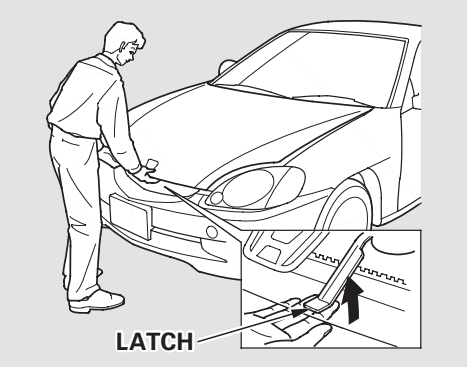

2. Standing in front of the car, put your fingers under the front edge of the hood to the right of center. Slide your hand to the left until you feel the hood latch handle. Push this handle up until it releases the hood. Lift the hood.

If you can open the hood without lifting the hood latch handle, or the hood latch handle moves stiffly or does not spring back as before, the mechanism should be cleaned and lubricated (see page 184).

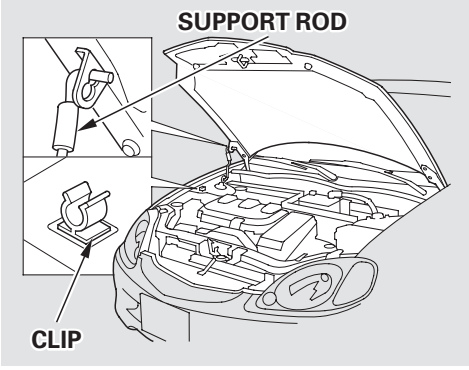

3. Pull the support rod out of its clip and insert the end into the hole on the left side of the hood.

To close the hood, lift it up slightly to remove the support rod from the hole. Put the support rod back into its holding clip. Lower the hood to about a foot (30 cm) above the fender, then let it drop.

After closing the hood, make sure it is securely latched.

CONTINUED

Oil Check

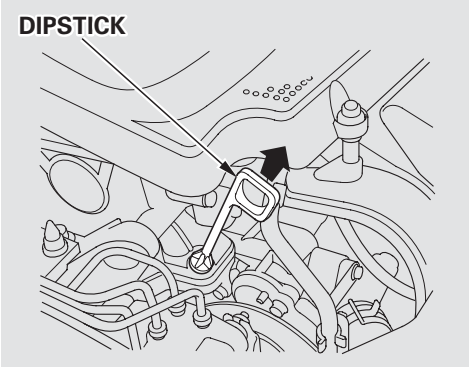

Check the engine oil level every time you fill the car with fuel. Wait a few minutes after turning the engine off before you check the oil.

1. Remove the dipstick (orange handle).

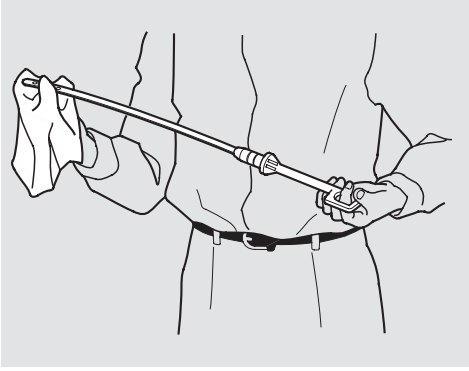

2. Wipe the dipstick with a clean cloth or paper towel.

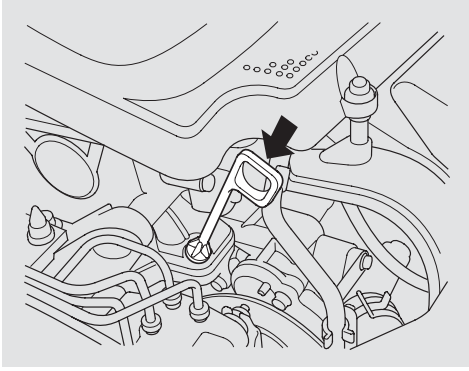

3. Insert it all the way back in its tube.

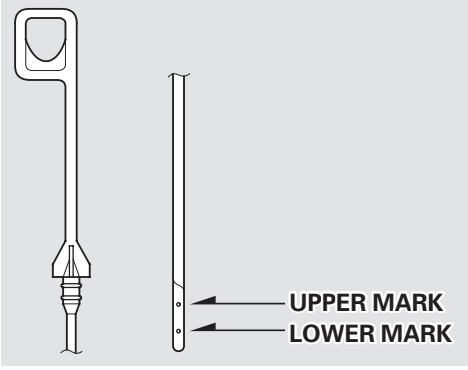

4. Remove the dipstick again and check the level. It should be between the upper and lower marks.

If it is near or below the lower mark, see **Adding Oil** on page 167 .

Engine Coolant Check

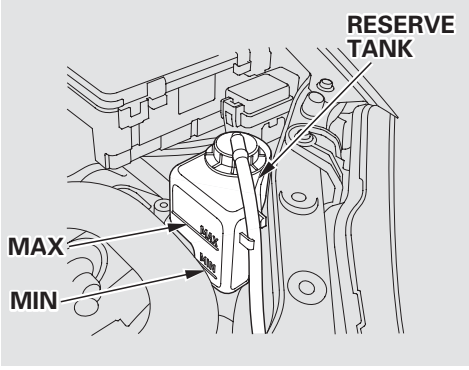

Look at the coolant level in the radiator reserve tank. Make sure it is between the MAX and MIN lines. If it is below the MIN line, see **Adding Engine Coolant** on page 171 for information on adding the proper coolant.

Refer to **Owner Maintenance Checks** on page 165 for information on checking other items in your Honda.

Fuel Economy

The condition of your car and your driving habits are the two most important things that affect the fuel mileage you get.

Vehicle Condition
Always maintain your car according to the maintenance schedule. This will keep it in top operating condition.

An important part of that maintenance is the **Owner Maintenance Checks** (see page 165). For example, an underinflated tire causes more "rolling resistance," which uses fuel. It also wears out faster, so check the tire pressure at least monthly.

Engine oil also affects fuel economy. The fuel efficient, low-viscosity 0W-20 oil recommended for your Insight is formulated to help the engine use less fuel. This oil is available at your Honda dealer.

In winter, the build-up of snow on your car's underside adds weight and rolling resistance. Frequent cleaning helps your fuel mileage and reduces the chance of corrosion.

Driving Habits
You can improve fuel economy by driving moderately. Rapid acceleration, abrupt cornering, and hard braking use more fuel.

To get the best fuel mileage, drive in the highest gear that is practical for the speed you are driving, and always accelerate slowly.

You may find that your Insight's unique combination of an engine and an electric motor has driving characteristics that are somewhat different from what you are used to. Shift Up and Shift Down indicators (5-speed manual transmission only) on the instrument panel show when to shift to a higher or lower gear. By shifting as soon as the indicator comes on, you will keep the engine operating in its most economical range.

Depending on traffic conditions, try to maintain a constant speed. Every time you slow down and speed up, your car uses extra fuel.

Wind resistance causes vehicles to use more fuel at higher speeds. Driving at moderate speeds on the highway reduces wind resistance and conserves fuel.

A cold engine uses more fuel than a warm engine. It is not necessary to "warm-up" a cold engine by letting it idle for a long time. You can drive away in about a minute, no matter how cold it is outside. The engine will warm up faster, and you get better fuel economy. To cut down on the number of "cold starts," try to combine several short trips into one.

The air conditioning puts an extra load on the engine which makes it use more fuel. Turn off the A/C to cut down on air conditioning use. Use the flow-through ventilation when the outside air temperature is moderate.

If air conditioning is needed, you can save some fuel by using the A/C in "Econ" mode. When the outside temperature is above 41°F (5°C), this mode allows the Auto Idle Stop function to shut off the engine when the vehicle is stopped, resulting in fuel savings.

You may notice that using the A/C causes a greater drop in fuel economy than you are used to in other vehicles. Although the amount of extra fuel used by the A/C load on the engine is no greater than other vehicles, it is more noticeable because of your Insight's excellent fuel mileage. Using the A/C in hot weather may result in fuel economy that is lower than expected.

Modifying your car, or installing some non-Honda accessories, can make your car unsafe. Before you make any modifications or add any accessories, be sure to read the following information.

Accessories
Your dealer has Genuine Honda accessories that allow you to personalize your car. These accessories have been designed and approved for your car, and are covered by warranty.

Non-Honda accessories are usually designed for universal applications. Although aftermarket accessories may fit on your car, they may not meet factory specifications, and could adversely affect your car's handling and stability. (See "Modifications" on page 129 for additional information.)

⚠WARNING

Improper accessories or modifications can affect your car's handling, stability and performance, and cause a crash in which you can be hurt or killed.

Follow all instructions in this owner's manual regarding accessories and modifications.

When properly installed, cellular phones, alarms, two-way radios, and low-powered audio systems should not interfere with your car's computer-controlled systems, such as the SRS.

However, if electronic accessories are improperly installed, or exceed your car's electrical system capacity, they can interfere with the operation of your car, or even cause the airbags to deploy.

Before installing any accessory:

- Make sure the accessory does not obscure any lights, or interfere with proper car operation or performance.
- Be sure electronic accessories do not overload electrical circuits (see page 232).
- Have the installer contact your Honda dealer for assistance before installing any electronic accessory.

If possible, have your dealer inspect the final installation.

Modifications
Do not remove any original equipment or modify your car in any way that would alter its design or operation. This could make your car unsafe and illegal to drive.

For example, do not make any modifications that would change the ride height of your car, or install wheels and tires with a different overall diameter.

Such modifications can adversely affect handling, and interfere with the operation of the car's other systems.

In addition, any modifications that decrease ground clearance increase the chance of undercarriage parts striking a curb, speed bump, or other raised object, which could cause your airbags to deploy.

Do not modify your steering wheel or any other part of your Supplemental Restraint System. Modifications could make the system ineffective.

Additional Safety Precaution
Do not attach or place objects on the airbag covers. Any object attached to or placed on the covers marked "SRS AIRBAG," in the center of the steering wheel and on top of the dashboard, could interfere with the proper operation of the airbags. Or, if the airbags inflate, the objects could be propelled inside the car and hurt someone.

Carrying Cargo

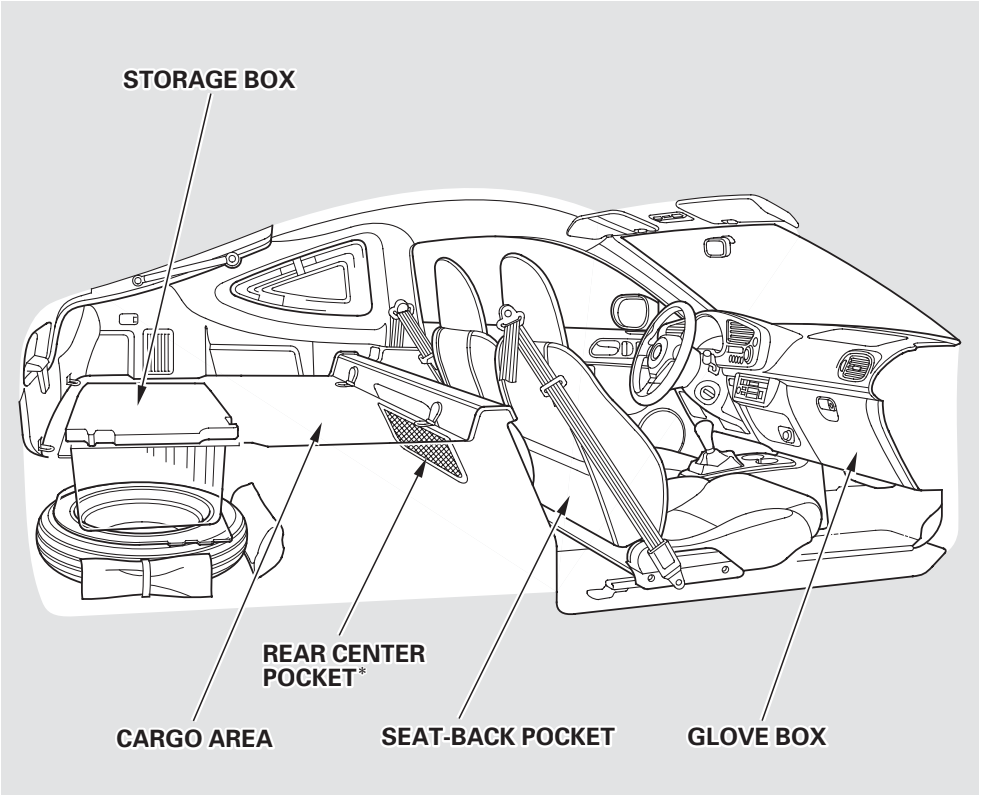

Your car has several convenient storage areas so you can stow cargo safely.

The glove box, rear center pocket and seat-back pocket are designed for small, lightweight items. The cargo area is intended for larger, heavier items.
However, carrying too much cargo, or improperly storing it, can affect your car's handling, stability and operation and make it unsafe. Before carrying any type of cargo, be sure to read the following pages.

* Do not store large objects in the rear center pocket. It will be broken when you adjust the seats backwards.

Load Limit
The maximum load for your vehicle is 400 lbs (185 kg).

This figure includes the total weight of all occupants, cargo, and accessories.

To figure out how much cargo you can carry:

- Add up the weight of all occupants.
- Subtract the total from 400 lbs (185 kg).

The final number is the total weight of cargo you can carry.

⚠WARNING

Overloading or improper loading can affect handling and stability and cause a crash in which you can be hurt or killed.

Follow all load limits and other loading guidelines in this manual.

Carrying Items in the Passenger Compartment
- Store or secure all items that could be thrown around and hurt someone during a crash.
- Be sure items placed on the floor behind the front seats cannot roll under the seats and interfere with the driver's ability to operate the pedals, or with the proper operation of the seats.
- Keep the glove box closed while driving. If the lid is open, a passenger could injure their knees during a crash or sudden stop.

Carrying Cargo in the Cargo Area
- Distribute cargo evenly on the floor of the cargo area, placing the heaviest items on the bottom and as far forward as possible.
- Tie down items that could be thrown about the car during a crash or sudden stop.
- Do not stack objects higher than the tops of the seat-backs. They could block your view and be thrown about the vehicle during a crash or sudden stop.

CONTINUED

- If you carry large items that prevent you from closing the hatch, exhaust gas can enter the passenger area. To avoid the possibility of carbon monoxide poisoning, follow the instructions on page 40 .

- The floor on the storage box is made of a soft light plastic material. It is not strong enough to stand heavy goods on it.

Cargo Hooks

To secure the cargo, you can use the four cargo hooks on the cargo area. The illustration shows the location of each cargo hook.

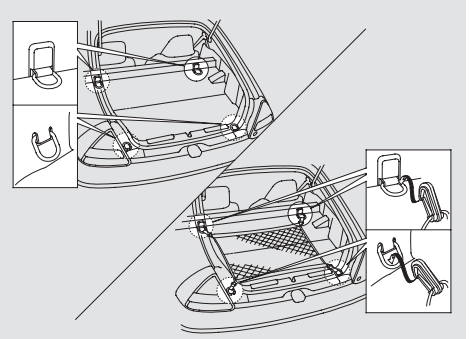

Cargo Hooks and Cargo Net

Cargo Net

The cargo net can be used to help hold down light items in the cargo area. The cargo net may not prevent heavy items from being thrown forward in a crash or a sudden stop. Cargo secured with this net should not exceed 22 lbs (10 kg). Heavy items should be secured to the cargo area floor with tie-downs or cinch straps attached to the cargo hooks.

Air Intake

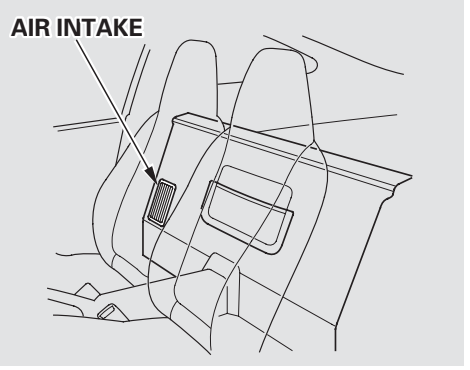

The air intake for the battery is located behind the passenger's seat. Do not block this air intake with any cargo.

This section gives you tips on starting the engine under various conditions, and how to operate the manual transmission. It also includes important information on parking your car, and the braking system.

Preparing to Drive 134
Starting the Engine..... 135
Starting in Cold Weather at High Altitude 135
5-speed Manual Transmission 136
Auto Idle Stop..... 137
Shift Up/Shift Down Indicators..... 139
Engine Speed Limiter 139
Automatic Transmission..... 140
Continuously Variable Transmission (CVT) 140
Shift Lever Position Indicator .. 140
Shift Lever Positions 140
Engine Speed Limitter 143
Shift Lock Release..... 144
Auto Idle Stop..... 145
Parking..... 147
Parking Tips 147
The Braking System..... 148
Brake Wear Indicators..... 148
Brake System Design..... 149
Anti-lock Brakes 149
Driving in Bad Weather..... 151
Towing a Trailer 152

Preparing to Drive

You should do the following checks and adjustments every day before you drive your car.

1. Make sure all windows, mirrors, and outside lights are clean and unobstructed. Remove frost, snow, or ice.

2. Check that the hood and hatch are fully closed.

3. Visually check the tires. If a tire looks low, use a gauge to check its pressure.

4. Check that any items you may be carrying with you inside are stored properly or fastened down securely.

5. Check the adjustment of the seat (see page 76).

6. Check the adjustment of the inside and outside mirrors (see page 78).

7. Make sure the doors are securely closed and locked.

8. Fasten your seat belt. Check that your passenger has fastened his seat belt (see page 15).

9. Turn the ignition switch ON (II). Check the indicator lights in the instrument panel.

10. Start the engine (see page 135).

11. Check the gauges and indicator lights in the instrument panel (see page 45).

1. Apply the parking brake.

2. In cold weather, turn off all electrical accessories to reduce the drain on the battery.

3. *Manual Transmission:*
   Push the clutch pedal down all the way. START (III) does not function unless the clutch pedal is depressed.
   Automatic Transmission:
   Make sure the shift lever is in Park. Press on the brake pedal.

4. Without touching the accelerator pedal, turn the ignition key to the START (III) position. If the engine does not start right away, do not hold the key in START (III) for more than 15 seconds at a time. Pause for at least 10 seconds before trying again.

5. If the engine does not start within 15 seconds, or starts but stalls right away, repeat step 4 with the accelerator pedal pressed half-way down. If the engine starts, release pressure on the accelerator pedal so the engine does not race.

6. If the engine still does not start, press the accelerator pedal all the way down and hold it there while starting in order to clear flooding. As before, keep the ignition key in the START (III) position for no more than 15 seconds. Return to step 5 if the engine does not start. If it starts, lift your foot off the accelerator pedal so the engine does not race.

Starting in Cold Weather at High Altitude (Above 8,000 feet/ 2,400 meters)

An engine is harder to start in cold weather. The thinner air found at high altitude above 8,000 feet (2,400 meters) adds to the problem.
Use the following procedure:

1. Turn off all electrical accessories to reduce the drain on the battery.

2. Push the accelerator pedal half-way to the floor and hold it there while starting the engine. Do not hold the ignition key in START (III) for more than 15 seconds. When the engine starts, release the accelerator pedal gradually as the engine speeds up and smooths out.

3. If the engine fails to start in step 2, push the accelerator pedal to the floor and hold it there while you try to start the engine for no more than 15 seconds. If the engine does not start, return to step 2.

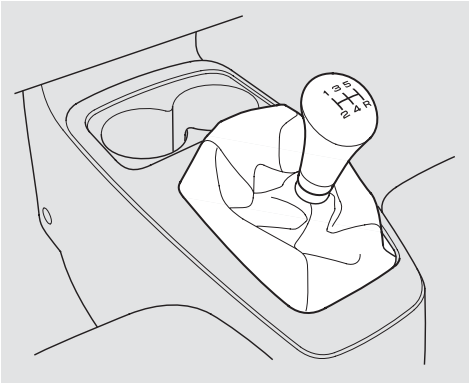

The manual transmission is synchronized in all forward gears for smooth operation. It has a lockout so you cannot shift directly from Fifth to Reverse. When shifting up or down, make sure you push the clutch pedal down all the way, shift to the next gear, and let the pedal up gradually. When you are not shifting, do not rest your foot on the clutch pedal. This can cause your clutch to wear out faster.

Come to a full stop before you shift into Reverse. You can damage the transmission by trying to shift into Reverse with the car moving. Push down the clutch pedal, and pause for a few seconds before shifting into Reverse, or shift into one of the forward gears for a moment. This stops the gears so they won't "grind."

When slowing down, you can get extra braking from the engine by shifting to a lower gear. This extra braking can help you maintain a safe speed and prevent your brakes from overheating while going down a steep hill. Before downshifting, make sure the vehicle speed is low enough that you will not activate the engine speed limiter in the lower gear. Make sure the engine speed will not go into the tachometer's red zone in the lower gear before downshifting.

⚠ WARNING

Rapid slowing or speeding-up can cause loss of control on slippery surfaces. If you crash, you can be injured.

Use extra care when driving on slippery surfaces.

Auto Idle Stop
To maximize fuel economy, your Insight has an Auto Idle Stop function. Under certain conditions, the engine will shut off when you come to a stop. Those conditions are:

- The engine coolant is nearly up to normal operating temperature.
- The vehicle's speed is below 19 mph (30 km/h) and you are pressing on the brake pedal to come to a stop.
- You depress the clutch pedal.
- You are not pressing on the accelerator pedal.
- The IMA battery is sufficiently charged (at least 1/3 on the Battery Level Gauge).
- The A/C is off, or in ECON mode (See pages 84, 93).
- There is adequate vacuum reserve for the power brakes.

When these conditions are met, the engine will shut off as you come to a stop. It will start again automatically when you depress the clutch pedal and move this shift lever to first gear. There is no need to start the engine with the ignition switch.

It is recommended that you move the shift lever to Neutral and remove your foot from the clutch pedal while you are stopped. Sitting with the clutch pedal depressed and the shift lever in gear will cause the engine to continue running, defeating the fuel economy benefits of the Auto Idle Stop function.

During Auto Stop, the IMA charge and power brake vacuum reserve is monitored by the system. If either drops below a desired level, and the shift lever is in Neutral, the engine will restart so it can recharge the IMA battery or replenish the vacuum supply.

CONTINUED

Auto Idle Stop Indicator

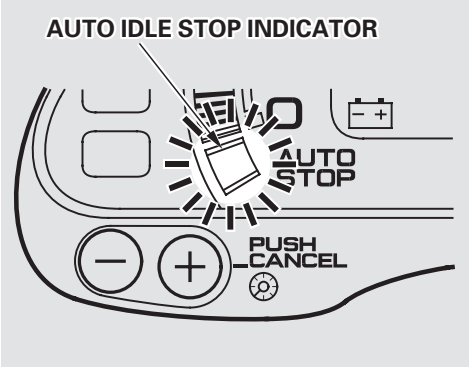

This indicator comes on as a reminder that the engine has stopped because of the Auto Idle Stop function. When the indicator is off, it means that Auto Idle Stop is not active. When the indicator is on, but the engine is not running, it means the clutch pedal is depressed, but the transmission is not in gear. When the indicator is blinking, it means the clutch pedal is not depressed. You cannot restart the engine with the ignition switch when this light is blinking.

This indicator will blink, and you will hear a chime, if you open the door when Auto Stop is active.

Always turn the ignition switch to LOCK and remove the key if you are getting out of the vehicle.

Shift Up/Shift Down Indicators

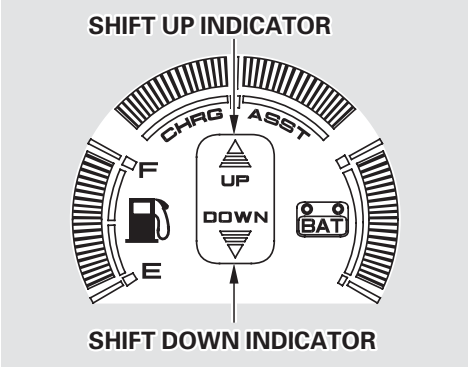

Either the Shift Up or Shift Down indicator will light to show the best time to shift to a higher or lower gear. You can achieve the best fuel economy by accelerating and decelerating slowly, and shifting when prompted by the Shift Up indicator.

The Shift Down indicator prompts to shift to a lower gear to keep speed in a hilly road.

Road and traffic conditions may require you to shift at times other than those indicated.

Engine Speed Limiter

If you exceed the maximum speed for the gear you are in, the engine speed will enter into the tachometer's red zone. If this occurs, you may feel the engine cut in and out. This is caused by a limiter in the engine's computer controls. The engine will run normally when you reduce the RPM below the red zone.

Before downshifting, make sure the engine will not go into the tachometer's red zone.

Continuously Variable Transmission (CVT)

U.S. model

Honda's Continuously Variable automatic transmission's unique design provides a smooth, constant flow of power. It is electronically controlled for more precise operation and better fuel economy.

Shift Lever Position Indicator

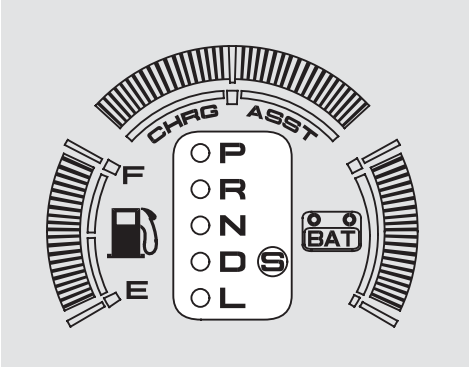

This indicator on the instrument panel shows which position the shift lever is in.

The "D" indicator comes on for a few seconds when you turn the ignition switch ON (II). If it flashes while driving (in any shift position), it indicates a possible problem in the transmission. Avoid rapid acceleration and have the transmission checked by an authorized Honda dealer as soon as possible.

Shift Lever Positions

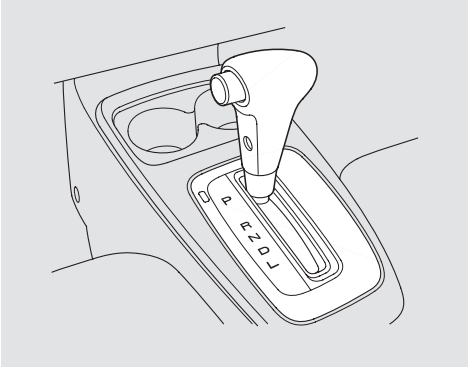

The shift lever has five positions. It must be in Park or Neutral to start the engine. When you are stopped in D, L, N or R, press firmly on the brake pedal and keep your foot off the accelerator pedal.

To shift from:	Do this:
P to R	Press the brake pedal and press the release button.
R to P N to R D to L	Press the release button.
N to D D to N L to D R to N	Move the lever.

Park (P) — This position mechanically locks the transmission. Use Park whenever you are turning off or starting the engine. To shift out of Park, you must press on the brake pedal, have your foot off the accelerator pedal, and press the release button on the side of the shift lever. If you have done all of the above and still cannot move the lever out of Park, see Shift Lock Release on page 146 .

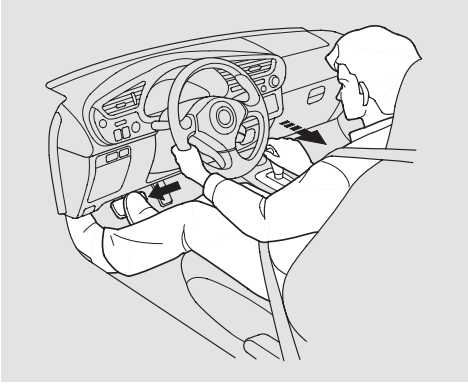

You must also press the release button to shift into Park. To avoid transmission damage, come to a complete stop before shifting into Park. The shift lever must be in Park before you can remove the key from the ignition switch.

CONTINUED

Reverse (R) — To shift from Reverse to Park, see the explanation under Park. To shift to Reverse from Neutral, come to a complete stop first. Press the release button before shifting into Reverse from Neutral.

Neutral (N) — Use Neutral if you need to restart a stalled engine, or if it is necessary to stop briefly with the engine idling. Always shift to Park position if you need to leave the vehicle for any reason. Press on the brake pedal when you are moving the shift lever from Neutral to another position.

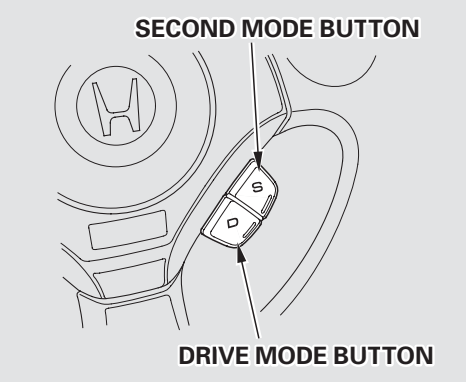

Drive (D) — Use this position for your normal driving. The drive position has two modes, Drive (D) and Second (S). You can select the desired mode with the two select buttons on the steering wheel. The "D" indicator light remains lit in either mode.

Drive Mode — Use this mode for everyday driving. The transmission automatically adjusts to keep the engine at the best speed for driving conditions. To help the engine warm up faster, the transmission will select ratios that allow the engine to run at higher speeds when it is cold. Push the Drive mode button on the steering wheel to change from the Second mode to the Drive mode.

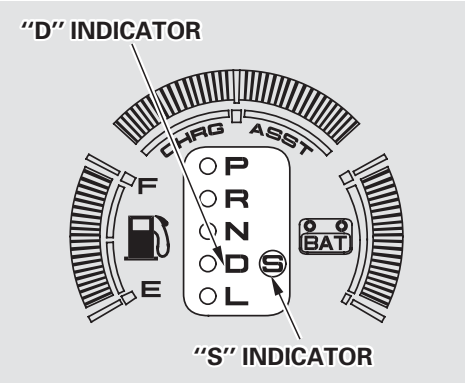

Second (S) Mode — In this mode, the transmission selects a wider range of ratios to give better acceleration. Use this mode for driving up or downhill. Push the Second mode button on the steering wheel to select Second mode. Along with the "D" indicator, the "S" indicator comes on as a reminder. To change from Second (S) mode to Drive mode, push the Drive mode button.

You can switch into and out of Second mode with the ignition switch ON (II) and the shift lever in D position. If you turn the ignition switch to ACCESSORY (I) in Second mode, the mode is switched to Drive.

The "S" indicator also comes on for a few seconds when you turn the ignition switch ON(II).

Low (L) — To shift to Low, press the release button on the side of the shift lever. Use Low to get more power when climbing, and for maximum engine braking when going down steep hills.

For faster acceleration when in D or L, the transmission will automatically "kick down" to a lower range of ratios by pushing the accelerator pedal to the floor.

Engine Speed Limiter
If you exceed the maximum speed for the gear you are in, the engine speed will enter into the tachometer's red zone. If this occurs, you may feel the engine cut in and out. This is caused by a limiter in the engine's computer controls. The engine will run normally when you reduce the RPM below the red zone.

Shift Lock Release
This allows you to move the shift lever out of Park if the normal method of pushing on the brake pedal and pressing the release button does not work.

1. Set the Parking brake.

2. Remove the key from the ignition switch.

3. Put a cloth on the edge of the Shift Lock Release slot cover next to the shift lever.
   Use a small flat-tipped screwdriver or small metal plate (neither are included in the tool kit) to remove the cover. Carefully pry off the edge of the cover.

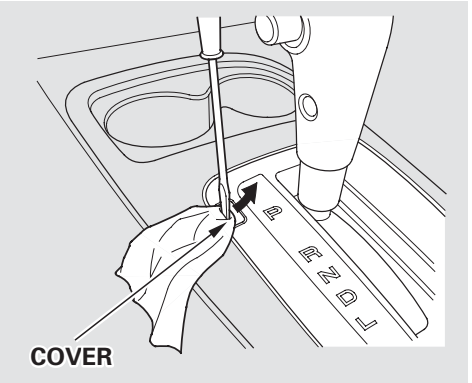

4. Insert the key in the Shift Lock Release slot.

5. Push down on the key while you press the release button on the shift lever and move the shift lever out of Park to Neutral.

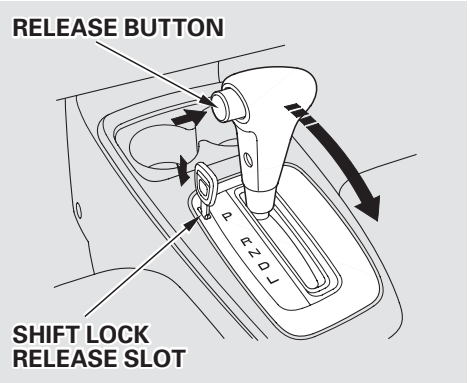

6. Remove the key from the Shift Lock Release slot, then reinstall the cover. Make sure the notch on the cover is on the left side. Depress the brake pedal and restart the engine.

If you need to use the Shift Lock Release, it means your car is developing a problem. Have the car checked by your Honda dealer.

Auto Idle Stop
To maximize fuel economy, your Insight has an Auto Idle Stop function. Under certain conditions, the engine will shut off when you come to a stop. Those conditions are:

- The engine coolant is nearly up to normal operating temperature.
- The shift lever is in D or N.
- You are not pressing on the accelerator pedal.
- The IMA battery is sufficiently charged (at least 1/3 on the Battery Level Gauge).
- The A/C is off, or in ECON mode, and the outside temperature is above 41°F (5°C) (See pages 84, 93).
- There is adequate vacuum reserve for the power brakes.

When these conditions are met, the engine will shut off as you are braking to a stop and the vehicle speed goes below 5 mph (8 km/h).

The engine will start again when you release the brake pedal. It will also restart, even if you are still pressing the brake pedal, under these conditions:

- You move the shift lever from D or N to R, L, or P.
- You press the accelerator pedal.
- You are on an incline, and the vehicle begins rolling.

During Auto Stop, the IMA charge and power brake vacuum reserve is monitored by the system. If the vacuum reserve drops below an optimal level, the engine will restart to replenish the vacuum supply. If the IMA charge drops below an optimal level and the shift lever is in Neutral, the engine will restart to recharge the IMA battery.

CONTINUED

Auto Idle Stop Indicator

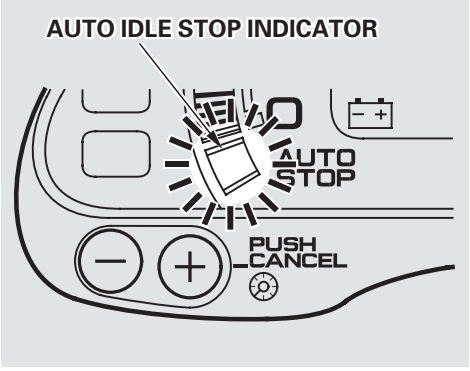

The indicator blinks as a reminder that the engine has stopped because of the Auto Idle Stop function. You cannot restart the engine with the ignition switch when this light is blinking.

If you open the driver's door when Auto Stop is active, the indicator will blink and you will hear a chime. The chime will stop when you close the door.

Always turn the ignition switch to LOCK and remove the key if you are getting out of the vehicle.

Always use the parking brake when you park your car. The indicator on the instrument panel shows that the parking brake is not fully released; it does not indicate that the parking brake is firmly set. Make sure the parking brake is set firmly or your car may roll if it is parked on an incline.

If your car has an automatic transmission, set the parking brake before you put the transmission in Park. This keeps the car from moving and putting pressure on the parking mechanism in the transmission — making it easier to move the shift lever out of Park when you want to drive away.

If the car is facing uphill, turn the front wheels away from the curb. If you have a manual transmission, put it in first gear.

If the car is facing downhill, turn the front wheels toward the curb. If you have a manual transmission, put it in reverse gear.

Make sure the parking brake is fully released before driving away. Driving with the parking brake partially set can overheat or damage the rear brakes.

Parking Tips

- Make sure the windows are closed.
- Turn off the lights.
- Place any packages, valuables, etc., in the storage box or take them with you.
- Lock the doors.
- Never park over dry leaves, tall grass, or other flammable materials. The three way catalytic converter gets very hot, and could cause these materials to catch on fire.

Your Honda is equipped with front disc brakes. The brakes on the rear wheels are drum. The braking system is power-assisted to reduce the effort needed on the brake pedal.

Put your foot on the brake pedal only when you intend to brake. Resting your foot on the pedal keeps the brakes applied lightly, causing them to build up heat. Heat build-up can reduce how well your brakes work. It also keeps your brake lights on all the time, confusing drivers behind you.

Constant application of the brakes when going down a long hill builds up heat and reduces their effectiveness. Use the engine to assist the brakes by downshifting to a lower gear and taking your foot off the accelerator pedal.

Check your brakes after driving through deep water. Apply the brakes moderately to see if they feel normal. If not, apply them gently and frequently until they do. Since a longer distance is needed to stop with wet brakes, be extra cautious and alert in your driving.

Brake Wear Indicators

The front disc brakes on all models have audible brake wear indicators.

When the brake pads need replacing, you will hear a distinctive metallic “screeching” sound when you apply the brakes. If you do not have the brake pads replaced, they will begin screeching all the time.

Your brakes may sometimes squeal or squeak when you apply them lightly. Do not confuse this with the brake wear indicators. They make a very audible “screeching.”

Brake System Design
The hydraulic system that operates the brakes has two separate circuits. Each circuit works diagonally across the vehicle (the left-front brake is connected with the right-rear brake, etc.). If one circuit should develop a problem, you will still have braking at two wheels.

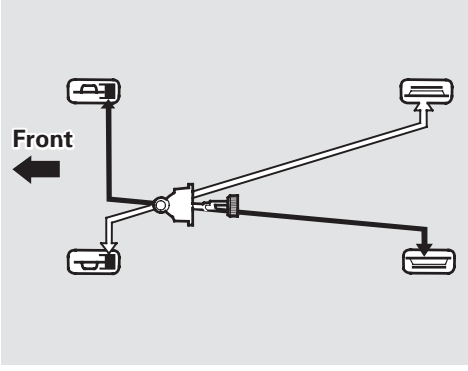

Anti-lock Brakes
Your car has an Anti-lock Brake System (ABS) as standard equipment. ABS helps to prevent the wheels from locking up and skidding during hard braking, allowing you to retain steering control.

When the front tires skid, you lose steering control; the car continues straight ahead even though you turn the steering wheel. The ABS helps to prevent lock-up and helps you retain steering control by pumping the brakes rapidly; much faster than a person can do it.

You should never pump the brake pedal, this defeats the purpose of the ABS. Let the ABS work for you by always keeping firm, steady pressure on the brake pedal as you steer away from the hazard. This is sometimes referred to as *"stomp and steer."*

You will feel a pulsation in the brake pedal when the ABS activates, and you may hear some noise. This is normal, it is the ABS rapidly pumping the brakes.

Activation varies with the amount of traction your tires have. On dry pavement, you will need to press on the brake pedal very hard before you activate the ABS. However, you may feel the ABS activate immediately if you are trying to stop on snow or ice.

CONTINUED

Important Safety Reminders

ABS does not reduce the time or distance it takes to stop the car, it only helps with steering control during braking. You should always maintain a safe following distance from other vehicles.

ABS will not prevent a skid that results from changing direction abruptly, such as trying to take a corner too fast or making a sudden lane change. Always drive at a safe, prudent speed for the road and weather conditions.

ABS cannot prevent a loss of stability. Always steer moderately when you are braking hard. Severe or sharp steering wheel movement can still cause your car to veer into oncoming traffic or off the road.

A car with ABS may require a longer distance to stop on loose or uneven surfaces, such as gravel or snow, than a car without anti-lock. Slow down and allow a greater distance between cars under those conditions.

ABS Indicator

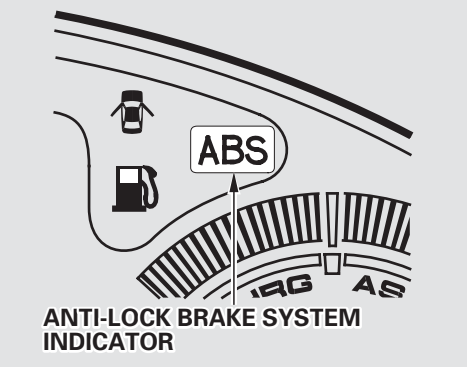

The ABS is self-checking. If anything goes wrong, the ABS indicator on the instrument panel comes on (see page 48). This means the anti-lock function of the braking system has shut down. The brakes still work like a conventional system without anti-lock, providing normal stopping ability. You should have the dealer inspect your car as soon as possible.

Rain, fog, and snow conditions require a different driving technique because of reduced traction and visibility. Keep your car well-maintained and exercise greater caution when you need to drive in bad weather.

Driving Technique — Always drive slower than you would in dry weather. It takes your car longer to react, even in conditions that may seem just barely damp. Apply smooth, even pressure to all the controls. Abrupt steering wheel movements or sudden, hard application of the brakes can cause loss of control in wet weather. Be extra cautious for the first few miles (kilometers) of driving while you adjust to the change in driving conditions. This is especially true in snow. A person can forget some snow-driving techniques during the summer months. Practice is needed to relearn those skills.

Exercise extra caution when driving in rain after a long dry spell. After months of dry weather, the first rains bring oil to the surface of the roadway, making it slippery.

Visibility — Being able to see clearly in all directions and being visible to other drivers are important in all weather conditions. This is more difficult in bad weather. To be seen more clearly during daylight hours, turn on your headlights.

Inspect your windshield wipers and washers frequently. Keep the windshield washer reservoir full of the proper fluid. Have the windshield wiper blades replaced if they start to streak the windshield or leave parts unwiped. Use the defrosters and air conditioning to keep the windows from fogging up on the inside (see page 88).

CONTINUED

Traction — Check your tires frequently for wear and proper pressure. Both are important in preventing “hydroplaning” (loss of traction on a wet surface). In the winter, mount snow tires on all four wheels for the best handling.

Watch road conditions carefully, they can change from moment to moment. Wet leaves can be as slippery as ice. “Clear” roads can have patches of ice. Driving conditions can be very hazardous when the outside temperature is near freezing. The road surface can become covered with areas of water puddles mixed with areas of ice, so your traction can change without warning.

Be careful when downshifting. If traction is low, you can lock up the drive wheels for a moment and cause a skid.

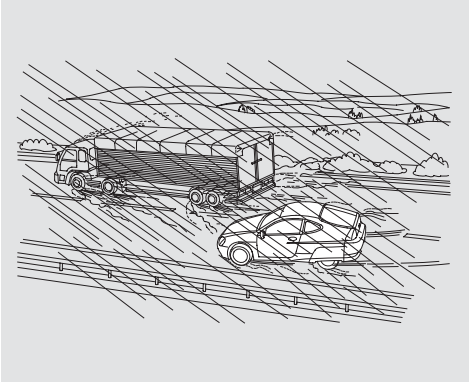

Be very cautious when passing, or being passed by other vehicles. The spray from large vehicles reduces your visibility, and the wind buffeting can cause you to lose control.

Towing a Trailer

Your vehicle is not designed to tow a trailer. Attempting to do so can void your warranties.

This section explains why it is important to keep your car well maintained and to follow basic maintenance safety precautions.

This section also includes Maintenance Schedules for normal driving and severe driving conditions, a Maintenance Record, and instructions for simple maintenance tasks you may want to take care of yourself.

If you have the skills and tools to perform more complex maintenance tasks on your Honda, you may want to purchase the Service Manual. See page 259 for information on how to obtain a copy, or see your Honda dealer.

Maintenance Safety 154
Important Safety Precautions .. 155
Maintenance Schedule 156
Maintenance Record 163
Owner Maintenance Checks 165
Fluid Locations 166
Engine Oil 167
Adding Oil 167
Recommended Oil 167
Synthetic Oil 168
Additives 168
Changing the Oil and Filter 169
Cooling System 171
Adding Engine Coolant 171
Replacing Engine Coolant 173
Windshield Washers 177
Transmission Fluid 178
Automatic Transmission (CVT) 178
5-speed Manual Transmission 180
Brake and Clutch Fluid 181
Brake System 181
Clutch System 182
Air Cleaner Element 183
Hood Latch 184
Battery 185
Wiper Blades 187
Air Conditioning System 190
Dust and Pollen Filter 191
Drive Belts 191
Tires 192
Inflation 192
Recommended Tire Pressures for Normal Driving 193
Inspection 194
Maintenance 194
Tire Rotation 195
Replacing Tires and Wheels 195
Wheels and Tires 196
Winter Driving 196
Snow Tires 197
Tire Chains 197
Lights 198
Replacing Bulbs 199
Storing Your Car 206

Maintenance Safety

Regularly maintaining your car is the best way to protect your investment. Proper maintenance is essential to your safety and the safety of your passengers. It will also reward you with more economical, trouble-free driving and help reduce air pollution.

⚠WARNING

Improperly maintaining this car or failing to correct a problem before driving can cause a crash in which you can be seriously hurt or killed.

Always follow the inspection and maintenance recommendations and schedules in this owner's manual.

This section includes instructions for simple maintenance tasks, such as checking and adding oil. Any service items not detailed in this section should be performed by a Honda technician or other qualified mechanic.

Some of the most important safety precautions are given here. However, we cannot warn you of every conceivable hazard that can arise in performing maintenance. Only you can decide whether or not you should perform a given task.

⚠WARNING

Failure to properly follow maintenance instructions and precautions can cause you to be seriously hurt or killed.

Always follow the procedures and precautions in this owner's manual.

Important Safety Precautions
Before you begin any maintenance, make sure your car is parked on level ground and that the parking brake is set. Also, be sure the engine is off. This will help to eliminate several potential hazards:

- **Carbon monoxide poisoning from engine exhaust.** Be sure there is adequate ventilation whenever you operate the engine.
- **Burns from hot parts.** Let the engine and exhaust system cool before touching any parts.
- **Injury from moving parts.** Do not run the engine unless instructed to do so.

Read the instructions before you begin, and make sure you have the tools and skills required.

To reduce the possibility of fire or explosion, be careful when working around gasoline or batteries. Use a commercially available degreaser or parts cleaner, not gasoline, to clean parts. Keep cigarettes, sparks, and flames away from the battery and all fuel-related parts.

You should wear eye protection and protective clothing when working near the battery or when using compressed air.

Maintenance Schedule

The Maintenance Schedule specifies how often you should have your car serviced and what things need attention. It is essential that you have your car serviced as scheduled to retain its high level of safety, dependability, and emissions control performance.

The services and time or distance intervals shown in the maintenance schedule assume you will use your car as normal transportation for passengers and their possessions. You should also follow these recommendations:

- Avoid exceeding your car's load limit. This puts excess stress on the engine, brakes, and many other parts of your car. The load limit is shown on the label on the driver's doorjamb.
- Operate your car on reasonable roads within the legal speed limit.
- Drive your car regularly over a distance of several miles (kilometers).
- Always use unleaded gasoline with the proper octane rating (see page 120).

Which Schedule to Follow:
Service your car according to the time and mileage periods on one of the Maintenance Schedules on the following pages. Select the schedule for "Severe Conditions" if most of your driving is done under one or more of the conditions listed on that page. Otherwise, follow the schedule for "Normal Conditions."

Your authorized Honda dealer knows your car best and can provide competent, efficient service. However, service at a dealer is not mandatory to keep your warranties in effect. Maintenance may be done by any qualified service facility or person who is skilled in this type of automotive service. Keep all the receipts as proof of completion, and have the person who does the work fill out the Maintenance Record. Check your warranty booklet for more information.

We recommend the use of genuine Honda parts and fluids whenever you have maintenance done. These are manufactured to the same high-quality standards as the original components, so you can be confident of their performance and durability.

U.S. Vehicles:
Maintenance, replacement or repair of emissions control devices and systems may be done by any automotive repair establishment or individual using parts that are "certified" to EPA standards.

According to state and federal regulations, failure to perform maintenance on the items marked with # will not void your emissions warranties. However, Honda recommends that all maintenance services be performed at the recommended time or mileage period to ensure long-term reliability.

Service at the indicated distance or time — whichever comes first.	miles x 1,000	15	30	45	60	75	90	105	120
	km x 1,000	24	48	72	96	120	144	168	192
	months	12	24	36	48	60	72	84	96
Replace engine oil		Replace every 7,500 miles (12,000 km) or 12 months							
Replace engine oil filter		●	●	●	●	●	●	●	●
Check engine oil and coolant		Check oil and coolant at each fuel stop							
Replace air cleaner element			●		●		●		●
Inspect valve clearance		Adjust only if noisy						●	
Replace spark plugs								●	
Inspect and adjust drive belts			●		●		●		●
Inspect idle speed								●	
Replace engine coolant		At 120,000 miles (192,000 km) or 120 months, then every 60,000 miles (96,000 km) or 60 months							
Replace transmission fluid	MT	Every 120,000 miles (192,000 km) or 72 months							
	CVT*		●		●		●		●
Inspect front and rear brakes		●	●	●	●	●	●	●	●
Replace brake fluid		Every 36 months (independent of mileage)							
Check parking brake adjustment		●	●	●	●	●	●	●	●
Replace dust and pollen filter			●		●		●		●
Rotate tires (Check tire inflation and condition at least once per month)		Rotate tires every 7,500 miles (12,000 km)							
Visually inspect the following items:									
Tie rod ends, steering gear box, and boots Suspension components Driveshaft boots Brake hoses and lines (including ABS) All fluid levels and condition of fluids Cooling system hoses and connections #Exhaust system #Fuel lines and connections		●	●	●	●	●	●	●	●

#: See information on maintenance and emissions warranty, last column, page 157 .
*: U.S. model

U.S. Owners
Follow the Normal Conditions Maintenance Schedule if the severe driving conditions specified in the Severe Conditions Maintenance Schedule do not apply.

NOTE: If you only *OCCASIONALLY* drive under a "severe" condition, you should follow the Normal Conditions Maintenance Schedule.

Canadian Owners
Follow the Maintenance Schedule for Severe Conditions.

Service at the indicated distance or time, whichever comes first. Do the items in **A, B, C, D** as required for each distance/time interval. Follow this schedule if the severe driving conditions described in the Severe Conditions Schedule on the next page do not apply.
Canadian owners: Follow the schedule for Severe Conditions.

7,500 mi/12,000 km	Do items in A.
15,000 mi/24,000 km/1 yrs	Do items in A, B.
22,500 mi/36,000 km	Do items in A.
30,000 mi/48,000 km/2 yrs	Do items in A, B, C.
37,500 mi/60,000 km	Do items in A.
45,000 mi/72,000 km/3 yrs	Do items in A, B, D.
52,500 mi/84,000 km	Do items in A.
60,000 mi/96,000 km/4 yrs	Do items in A, B, C.
67,500 mi/108,000 km	Do items in A.
75,000 mi/120,000 km/5 yrs	Do items in A, B.
82,500 mi/132,000 km	Do items in A.
90,000 mi/144,000 km/6 yrs	Do items in A, B, C, D.
97,500 mi/156,000 km	Do items in A.
105,000 mi/168,000 km/7 yrs	☐Replace spark plugs. ☐Inspect valve clearance. ☐Check idle speed. Do items in A, B.
112,500 mi/180,000 km	Do items in A.
120,000 mi/192,000 km/6 yrs	☐Replace transmission fluid (MT)*.
120,000 mi/192,000 km/8 yrs	Do items in A, B, C.
120,000 mi/192,000 km/10 yrs then every 60,000 miles (96,000 km) or 60 months	☐Replace engine coolant.

A	☐Replace engine oil. ☐Rotate tires (follow pattern on page 185).
B	☐Replace engine oil filter. ☐Inspect front and rear brakes. ☐Check parking brake adjustment. ☐Inspect tie rod ends, steering gearbox and boots. ☐Inspect suspension components. ☐Inspect driveshaft boots. ☐Inspect brake hoses and lines (including ABS). ☐Check all fluid levels, condition of fluids, and check for leaks. ☐Inspect cooling system hoses and connections. ☐#Inspect exhaust system. ☐#Inspect fuel lines and connections.
C	☐Replace air cleaner element. ☐Replace dust and pollen filter. ☐Replace transmission fluid (CVT). ☐Inspect and adjust drive belts.
D	☐Replace brake fluid every 3 years (independent of mileage).

*: Replace every 120,000 miles (192,000 km) or 72 months.
#: See information on maintenance and emissions warranty, last column, page 157 .

NOTE:
- Check engine oil and coolant at each fuel stop.
- Check and adjust valve clearance, cold engine, only if noisy.

Service at the indicated distance or time — whichever comes first.	miles x 1,000	15	30	45	60	75	90	105	120
	km x 1,000	24	48	72	96	120	144	168	192
	months	12	24	36	48	60	72	84	96
Replace engine oil and oil filter		Replace every 3,750 miles (6,000 km) or 6 months							
Check engine oil and coolant		Check oil and coolant at each fuel stop							
Replace air cleaner element —Use normal schedule except in dusty conditions		●	●	●	●	●	●	●	●
Inspect valve clearance		Adjust only if noisy						●	
Replace spark plugs								●	
Inspect and adjust drive belts			●		●		●		●
Inspect idle speed								●	
Replace engine coolant		At 120,000 miles (192,000 km) or 120 months, then every 60,000 miles (96,000 km) or 60 months							
Replace transmission fluid	MT	Every 60,000 miles (96,000 km) or 36 months							
	CVT*1		●		●		●		●
Inspect front and rear brakes		Inspect every 7,500 miles (12,000 km) or 6 months							
Replace brake fluid		Every 36 months (independent of mileage)							
Check parking brake adjustment		●	●	●	●	●	●	●	●
Replace dust and pollen filter*2			●		●		●		●
Lubricate all hinges, locks, and latches		●	●	●	●	●	●	●	●
Rotate tires (Check tire inflation and condition at least once per month)		Rotate tires every 7,500 miles (12,000 km)							
Visually inspect the following items:									
Tie rod ends, steering gear box, and boots Suspension components Driveshaft boots		Every 7,500 miles (12,000 km) or 6 months							
Brake hoses and lines (including ABS) All fluid levels and condition of fluids Cooling system hoses and connections #Exhaust system #Fuel lines and connections Lights and controls Vehicle underbody		●	●	●	●	●	●	●	●

: See information on maintenance and emissions warranty, last column, page 157 .

*1 : U.S. model

*2 : Refer to page 189 for replacement information under special driving conditions.

U.S. Owners

Follow the Severe Conditions Maintenance Schedule if you drive your vehicle *MAINLY* under one or more of the following conditions:

- Driving less than 5 miles (8 km) per trip or, in freezing temperatures, driving less than 10 miles (16 km) per trip.
- Driving in extremely hot [over 90°F (32°C)] conditions.
- Extensive idling or long periods of stop-and-go driving.
- Driving with a roof rack, or driving in mountainous conditions.
- Driving on muddy, dusty, or de-iced roads.

Canadian Owners

Follow the Maintenance Schedule for Severe Conditions.

Use this schedule if your vehicle is MAINLY driven in any of the following Severe Conditions, or normally driven in Canada; otherwise use the Normal Schedule. Service at the indicated distance or time, whichever comes first. Do the items in **A, B, C, D, E** as required for each distance/time.

Severe Conditions:

- Driving less than 5 miles (8 km) per trip or, in freezing temperatures, driving less than 10 miles (16 km) per trip.
- Driving in extremely hot (over 90°F/32°C) conditions.
- Extensive idling or long periods of stop-and-go driving.
- Driving with a roof rack, or driving in mountainous conditions.
- Driving on muddy, dusty, or de-iced roads.

3,750 mi/6,000 km/-	Do items in A.
7,500 mi/12,000 km/6 mos	Do items in A, B.
11,250 mi/18,000 km/-	Do items in A.
15,000 mi/24,000 km/1 yr	Do items in A, B, C.
18,750 mi/30,000 km/-	Do items in A.
22,500 mi/36,000 km/1½ yrs	Do items in A, B.
26,250 mi/42,000 km/-	Do items in A.
30,000 mi/48,000 km/2 yrs	Do items in A, B, C, D.
33,750 mi/54,000 km/-	Do items in A.
37,500 mi/60,000 km/2½ yrs	Do items in A, B.
41,250 mi/66,000 km/-	Do items in A.
45,000 mi/72,000 km/3 yrs	Do items in A, B, C, E.
48,750 mi/78,000 km/-	Do items in A.
52,500 mi/84,000 km/3½ yrs	Do items in A, B.
56,250 mi/90,000 km/-	Do items in A.
60,000 mi/96,000 km/3 yrs	☐Replace transmission fluid (MT).
60,000 mi/96,000 km/4 yrs	Do items in A, B, C, D.
63,750 mi/102,000 km/-	Do items in A.

: See information on maintenance and emissions warranty, last column, page 157 .

NOTE:

- Check engine oil and coolant at each fuel stop.

A	☐Replace engine oil and filter.
B	☐Inspect front and rear brakes. ☐Rotate tires (follow pattern on page 195). ☐Inspect tie rod ends, steering gear box and boots. ☐Inspect suspension components. ☐Inspect driveshaft boots.
C	☐Replace air cleaner element. ☐Check parking brake adjustment. ☐Lubricate all hinges, locks, and latches with multipurpose grease. ☐Inspect brake hoses and lines (including ABS). ☐Check all fluid levels, condition of fluids, and check for leaks. ☐Inspect cooling system hoses and connections. ☐#Inspect exhaust system. ☐#Inspect fuel lines and connections. ☐Check all lights. ☐Inspect the underbody.
D	☐Inspect and adjust drive belts. ☐Replace transmission fluid (CVT). ☐Replace dust and pollen filter.*1
E	☐Replace brake fluid every 3 years (independent of mileage).

CONTINUED

67,500 mi/108,000 km/4½ yrs	Do items in A, B.
71,250 mi/114,000 km/-	Do items in A.
75,000 mi/120,000 km/5 yrs	Do items in A, B, C.
78,750 mi/126,000 km/-	Do items in A.
82,500 mi/132,000 km/5½ yrs	Do items in A, B.
86,250 mi/138,000 km/-	Do items in A.
90,000 mi/144,000 km/6 yrs	Do items in A, B, C, D, E.
93,750 mi/150,000 km/-	Do items in A.
97,500 mi/156,000 km/6½ yrs	Do items in A, B.
101,250 mi/162,000 km/-	Do items in A.
105,000 mi/168,000 km/7 yrs	☐Inspect valve clearance. ☐Replace spark plugs. ☐Check idle speed. Do items in A, B, C.
108,750 mi/174,000 km/-	Do items in A.
112,500 mi/180,000 km/7½ yrs	Do items in A, B.
116,250 mi/186,000 km/-	Do items in A.
120,000 mi/192,000 km/6 yrs	☐Replace transmission fluid (MT).
120,000 mi/192,000 km/8 yrs	Do items in A, B, C, D.
120,000 mi/192,000 km/10 yrs, then every 60,000 mi (96,000 km) or 60 months	☐Replace engine coolant.

: See information on maintenance and emissions warranty, last column, page 157 .

∗1 : Refer to page 189 for replacement information under special driving conditions.

NOTE:

- Check engine oil and coolant at each fuel stop.
- Check and adjust valve clearance, cold engine, only if noisy.

Required Maintenance Record (for Normal and Severe Schedules)

You or the servicing dealer can record all completed maintenance here, whether you follow the schedule for normal conditions (page 158) or severe conditions (page 160). Keep the receipts for all work done on your vehicle.

3,750 mi 6,000 km	Signature or dealer stamp	mi/km Date
7,500 mi 12,000 km (or 6 mo)		mi/km Date
11,250 mi 18,000 km		mi/km Date
15,000 mi 24,000 km (or 1 year)		mi/km Date
18,750 mi 30,000 km		mi/km Date
22,500 mi 36,000 km (or 1½ years)		mi/km Date
26,250 mi 42,000 km		mi/km Date
30,000 mi 48,000 km (or 2 years)		mi/km Date

33,750 mi 54,000 km	Signature or dealer stamp	mi/km Date
37,500 mi 60,000 km (or 2½ years)		mi/km Date
41,250 mi 66,000 km		mi/km Date
45,000 mi 72,000 km (or 3 years)		mi/km Date
48,750 mi 78,000 km		mi/km Date
52,500 mi 84,000 km (or 3½ years)		mi/km Date
56,250 mi 90,000 km		mi/km Date
60,000 mi 96,000 km (or 4 years)		mi/km Date

CONTINUED

Required Maintenance Record (for Normal and Severe Schedules)

63,750 mi 102,000 km	Signature or dealer stamp	mi/km Date
67,500 mi 108,000 km (or 4½ years)		mi/km Date
71,250 mi 114,000 km		mi/km Date
75,000 mi 120,000 km (or 5 years)		mi/km Date
78,750 mi 126,000 km		mi/km Date
82,500 mi 132,000 km (or 5½ years)		mi/km Date
86,250 mi 138,000 km		mi/km Date
90,000 mi 144,000 km (or 6 years)		mi/km Date

93,750 mi 150,000 km	Signature or dealer stamp	mi/km Date
97,500 mi 156,000 km (or 6½ years)		mi/km Date
101,250 mi 162,000 km		mi/km Date
105,000 mi 168,000 km (or 7 years)		mi/km Date
108,750 mi 174,000 km		mi/km Date
112,500 mi 180,000 km (or 7½ years)		mi/km Date
116,250 mi 186,000 km		mi/km Date
120,000 mi 192,000 km (or 8 years)		mi/km Date

You should check the following items at the specified intervals. If you are unsure of how to perform any check, turn to the page given.

- Engine oil level — Check every time you fill the fuel tank. See page 124 .
- Engine coolant level — Check the radiator reserve tank every time you fill the fuel tank. See page 125 .
- Windshield washer fluid — Check the level in the reservoir monthly. If weather conditions cause you to use the washers frequently, check the reservoir each time you stop for fuel. See page 177 .
- Automatic transmission (CVT) — Check the fluid level monthly. See page 178 .
- Brakes — Check the fluid level monthly. See page 181 .
- Tires — Check the tire pressure monthly. Examine the tread for wear and foreign objects. See page 193 .
- Lights — Check the operation of the headlights, parking lights, taillights, high-mount brake light, turn signals, brake lights, and license plate lights monthly. See page 198 .

Fluid Locations

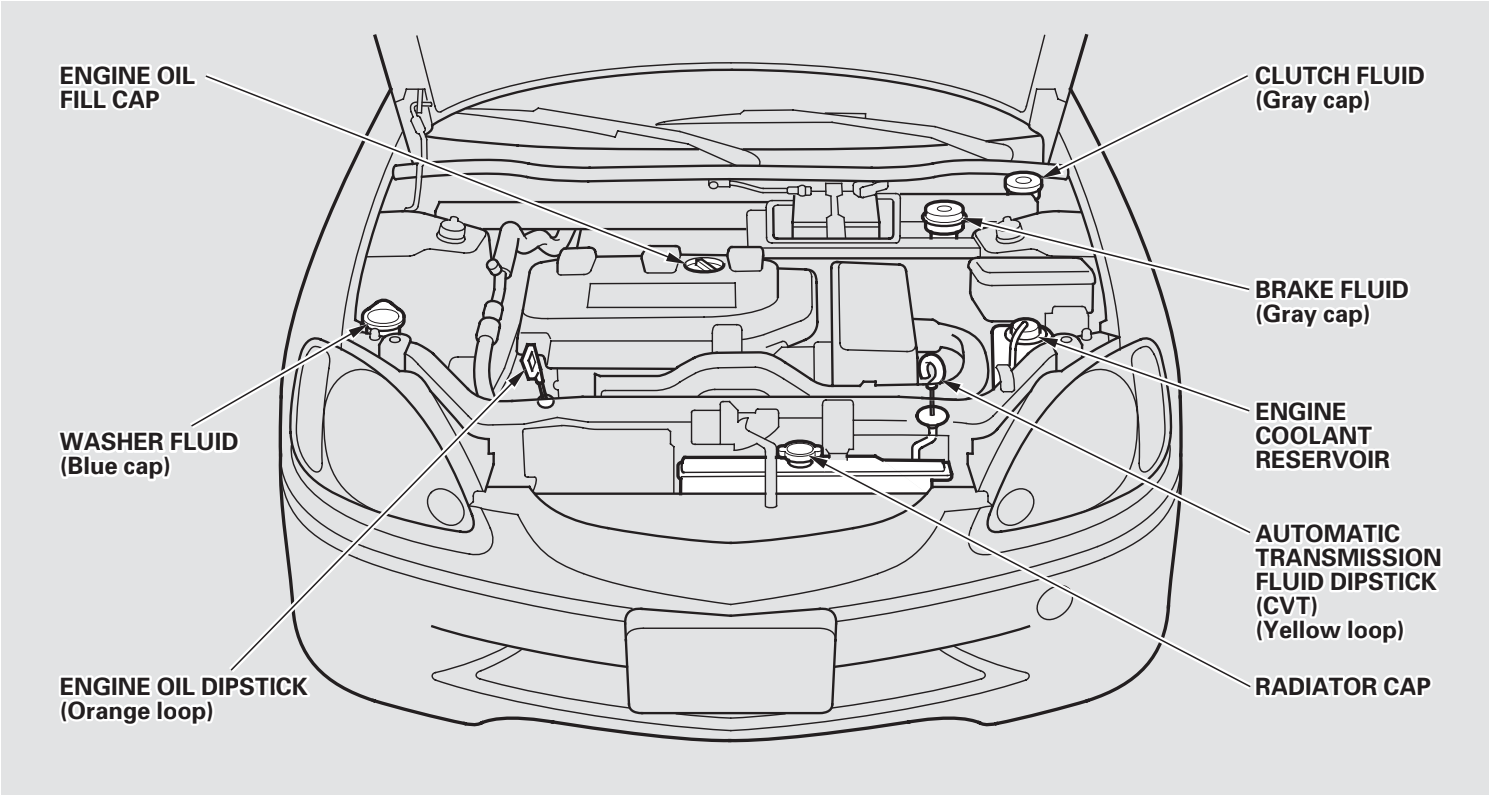

Adding Oil

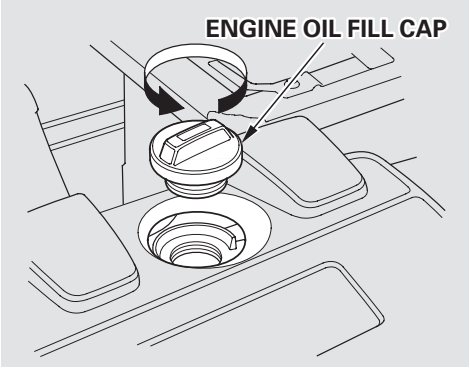

To add oil, unscrew and remove the engine oil fill cap on top of the valve cover. Pour in the oil, and install the engine oil fill cap. Tighten it securely. Wait a few minutes and recheck the oil level. Do not fill above the upper mark; you could damage the engine.

Recommended Oil

Oil is major contributor to your engine's performance and longevity. Always use a premium-grade detergent oil displaying the API Certification Seal. This seal indicates the oil is energy conserving, and that it meets the American Petroleum Institute's latest requirements. It is highly recommended that you use Honda Motor Oil in your vehicle for as long as you own it.

Make sure the API Certification Seal says "For Gasoline Engines."

API CERTIFICATION SEAL

CONTINUED

The numbers on the container's label tell you the oil's viscosity or weight. Select the oil for your car according to this chart.

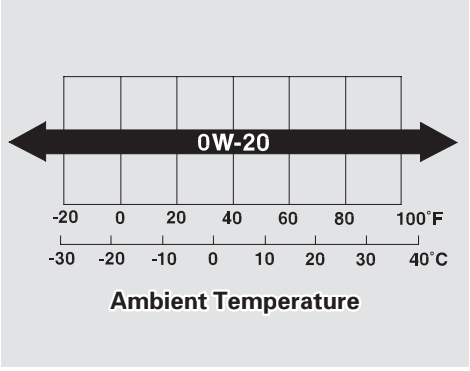

A very low-viscosity, fuel-efficient 0W-20 oil is preferred engine lubricant for your Insight. This special oil is formulated to help your engine use less fuel. It is available at your Honda dealer. A 5W-20 or 5W-30 oil may be used if 0W-20 is not available.

Synthetic Oil

You may use a synthetic motor oil if it meets the same requirements given for a conventional motor oil: it displays the API Certification Seal, and it is the proper weight as shown on the chart. When using synthetic oil, you must follow the oil and filter change intervals given in the maintenance schedule.

Additives

Your Honda does not require any oil additives. Additives may adversely affect your engine's or transmission's performance and durability.

Changing the Oil and Filter
Always change the oil and filter according to the time and distance (miles/kilometers) recommendations in the maintenance schedule. The oil and filter collect contaminants that can damage your engine if they are not removed regularly.

Changing the oil and filter requires special tools and access from underneath the car. The car should be raised on a service station-type hydraulic lift for this service. Unless you have the knowledge and proper equipment, you should have this maintenance done by a skilled mechanic.

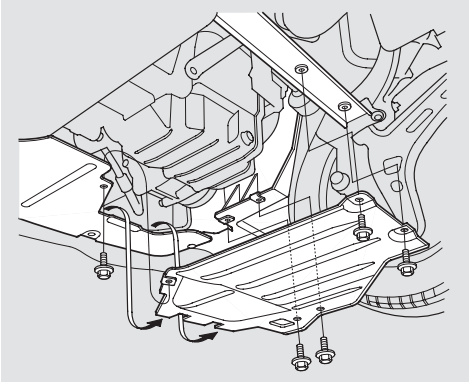

1. Open the hood and remove the engine oil fill cap. Remove the black cover under the engine.

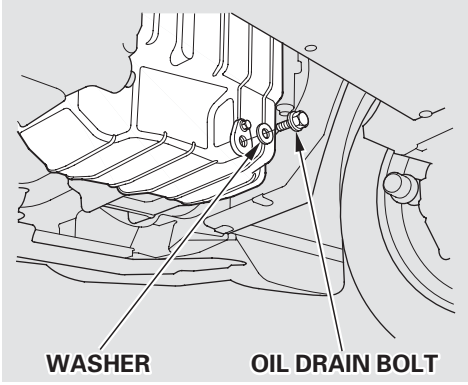

2. Remove the oil drain bolt and washer from the bottom of the engine. Drain the oil into an appropriate container.

   Do not loosen the smaller bolt located above the drain bolt.

CONTINUED

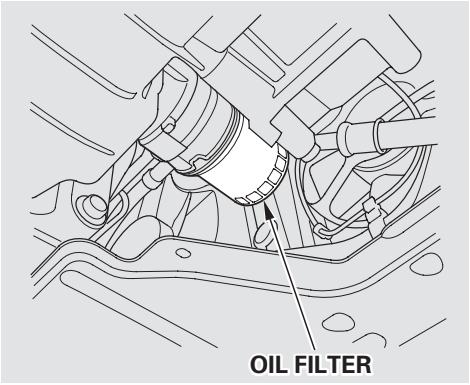

3. Remove the oil filter and let the remaining oil drain. A special wrench (available from your Honda dealer) is required to remove the filter.

4. Install a new oil filter according to instructions that come with it.

5. Put a new washer on the drain bolt, then reinstall the drain bolt. Tighten it to:
   29 lbf·ft (39 N·m , 4.0 kgf·m)

6. Refill the engine with the recommended oil.
   Engine oil change capacity (including filter):
   2.6 US qt (2.5 ℓ , 2.2 Imp qt)

7. Replace the engine oil fill cap. Start the engine. The oil pressure indicator light should go out within five seconds. If it does not, turn off the engine and reinspect your work.

8. Let the engine run for several minutes and check the drain bolt and oil filter for leaks.

9. Turn off the engine, let it sit for several minutes, then check the oil level. If necessary, add oil to bring the level to the upper mark on the dipstick.

10. Install the black cover under the engine.

NOTICE

Improper disposal of engine oil can be harmful to the environment. If you change your own oil, please dispose of the used oil properly. Put it in a sealed container and take it to a recycling center. Do not discard it in a trash bin or dump it on the ground.

Adding Engine Coolant

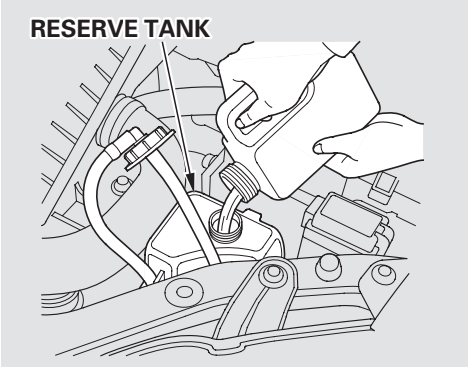

If the coolant level in the reserve tank is at or below the MIN line, add coolant to bring it up to the MAX line. Inspect the cooling system for leaks. This coolant should always be a mixture of 50 percent antifreeze and 50 percent water. Never add straight antifreeze or plain water.

Always use Honda All Season Antifreeze/Coolant Type 2. This coolant is pre-mixed with 50 percent antifreeze and 50 percent water. It does not require any additional mixing.
If it is not available, you may use another major-brand non-silicate coolant as a temporary replacement. Make sure it is a high-quality coolant recommended for aluminum engines. However, continued use of any non-Honda coolant can result in corrosion, causing the cooling system to malfunction or fail. Have the cooling system flushed and refilled with Honda antifreeze/coolant as soon as possible.

If the reserve tank is completely empty, you should also check the coolant level in the radiator.

⚠ WARNING

Removing the radiator cap while the engine is hot can cause the coolant to spray out, seriously scalding you.

Always let the engine and radiator cool down before removing the radiator cap.

CONTINUED

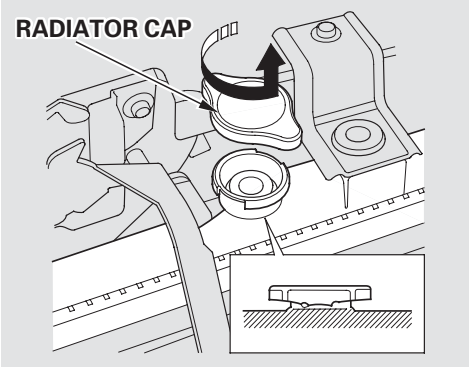

1. Make sure the engine and radiator are cool.

2. Turn the radiator cap counterclockwise, without pressing down on it, until it stops. This relieves any pressure remaining in the cooling system.

3. Remove the radiator cap by pushing down and turning counterclockwise.

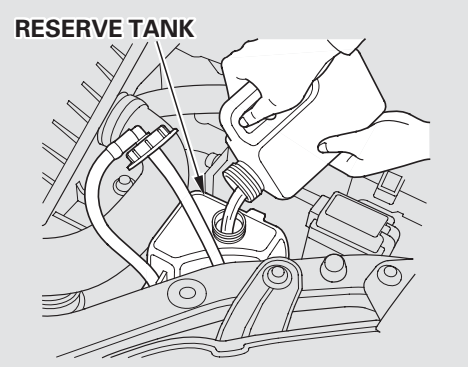

4. The coolant level should be up to the base of the filler neck. Add coolant if it is low.

5. Put the radiator cap back on. Tighten it fully.

6. Pour coolant into the reserve tank. Fill it to halfway between the MAX and MIN marks. Put the cap back on the reserve tank.

Do not add any rust inhibitors or other additives to your car's cooling system. They may not be compatible with the coolant or engine components.

Replacing Engine Coolant
The cooling system should be completely drained and refilled with new coolant according to the time and distance recommendations in the maintenance schedule. Only use Honda All Season Antifreeze/ Coolant Type 2.

Draining the coolant requires access to the underside of the car. Unless you have the tools and knowledge, you should have this maintenance done by a skilled mechanic.

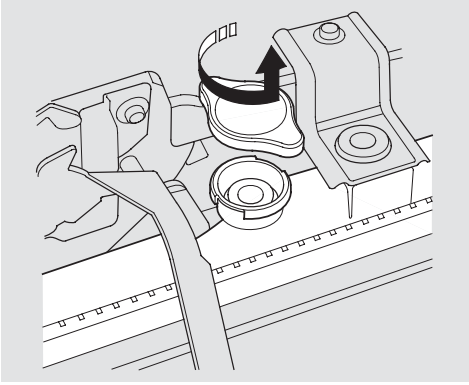

1. Turn the ignition ON (II). Turn the temperature control dial to maximum heat. Turn off the ignition and remove the key. Open the hood. Make sure the engine and radiator are cool to the touch.

2. Remove the radiator cap.

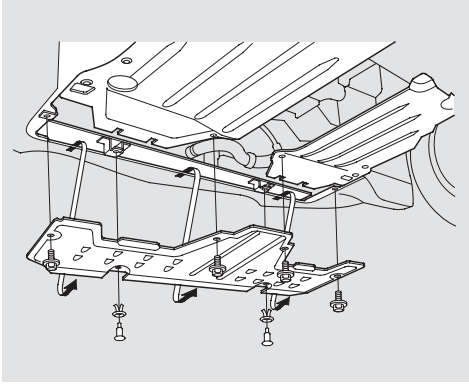

3. Remove the alloy cover under the radiator.

CONTINUED

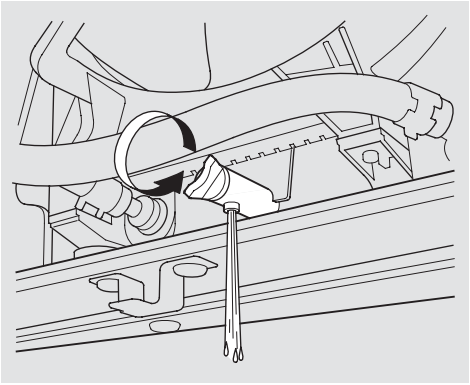

4. Loosen the drain plug on the bottom of the radiator. The coolant will drain through the splash guard. Remove the drain bolt and washer from the engine block.

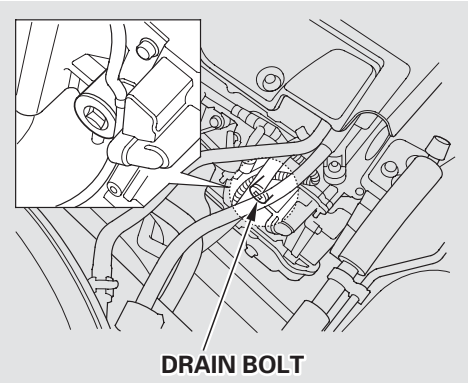

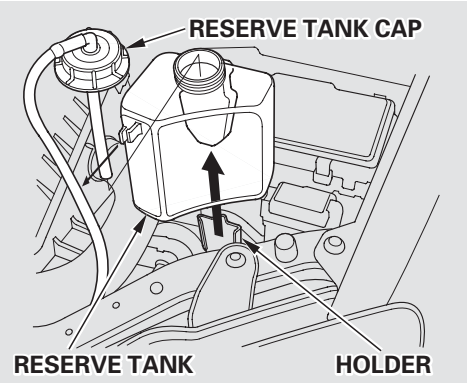

5. Remove the reserve tank from its holder by pulling it straight up. Drain the coolant, then put the tank back in its holder.

6. When the coolant stops draining, tighten the drain plug at the bottom of the radiator.
   Apply non-hardening sealant to the drain bolt threads, put a new washer on the drain bolt, and reinstall the bolt in the engine block. Tighten it securely.
   Tightening torque:
   61 lbf·ft (83 N·m , 8.5 kgf·m)

7. Remove the engine cover.

8. Loosen the bleeder bolt on top of the engine.
   Pour Honda All Season Antifreeze/Coolant Type 2 into the radiator. This coolant is a mixture of 50 percent anti-freeze and 50 percent water. Pre-mixing is not required.
   Tighten the bleeder bolt when coolant comes out in a steady stream with no bubbles.
   Install the radiator cap, and tighten it fully.

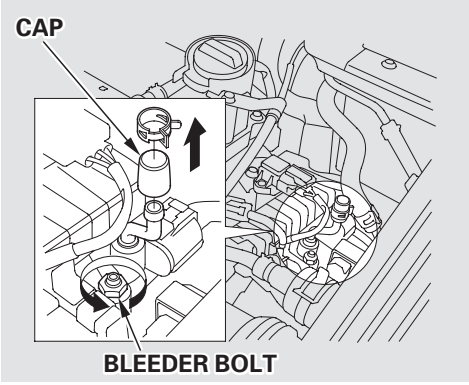

The cooling system capacity is:
0.61 US gal (2.3 ℓ , 0.51 Imp gal)

9. Remove the cap from the water outlet, and install a pipe and funnel.

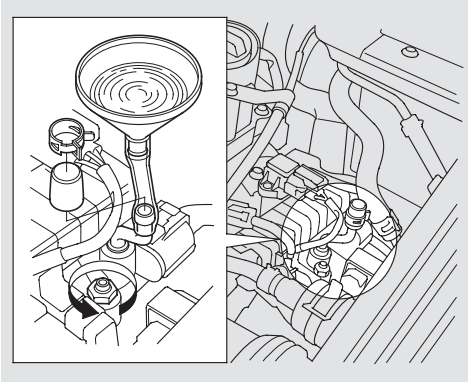

10. Pour coolant into the funnel until the coolant stops flowing into the engine.

11. Start the engine and let it run for about 30 seconds. Then turn off the engine.

12. Pour coolant into the water outlet up to its edge. Install the cap.

13. Install the engine cover.

CONTINUED

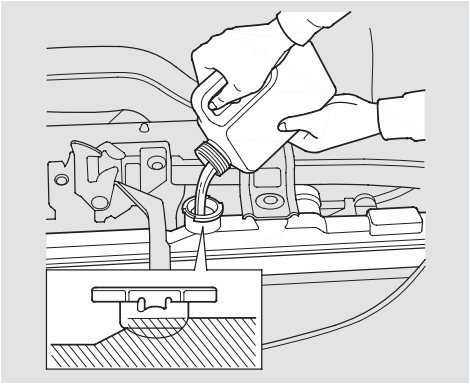

14. Start the engine and let it run for about 30 seconds. Then turn off the engine.

15. Pour coolant into the radiator up to the base of the filler neck.

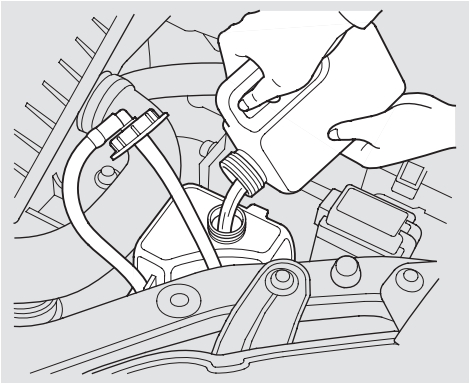

16. Fill the reserve tank to the MAX mark. Install the reserve tank cap.

Check the level in the windshield washer reservoir at least monthly during normal usage. In bad weather, when you use the washers often, check the level every time you stop for fuel. This reservoir supplies the windshield and rear window washers.

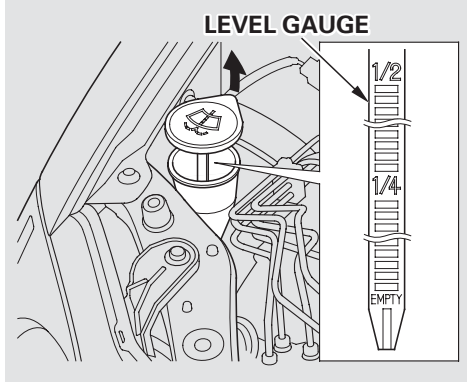

The windshield washer reservoir is located behind the passenger's side headlight. Check the reservoir's fluid level by removing the cap and looking at the level gauge attached to the cap.

Fill the reservoir with a good-quality windshield washer fluid. This increases the cleaning capability and prevents freezing in cold weather.

When you refill the reservoir, clean the edges of the windshield wiper blades with windshield washer fluid on a clean cloth. This will help to condition the blade edges.

NOTICE

Do not use engine antifreeze or a vinegar/water solution in the windshield washer reservoir.

Antifreeze can damage your car's paint, while a vinegar/water solution can damage the windshield washer pump.

Use only commercially-available windshield washer fluid.

Automatic Transmission (CVT)
U.S. model

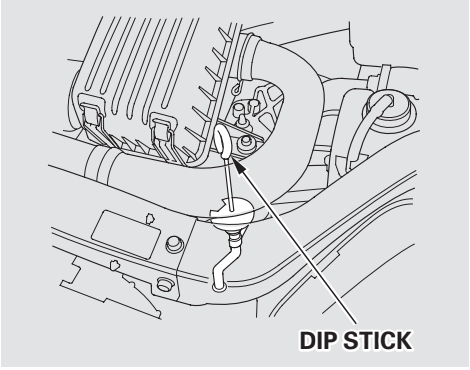

Check the fluid level with the engine at normal operating temperature.

1. Park the car on level ground. Shut off the engine. For accurate results, wait at least 60 seconds, and no more than 90 seconds, after shutting off the engine to check the fluid level.

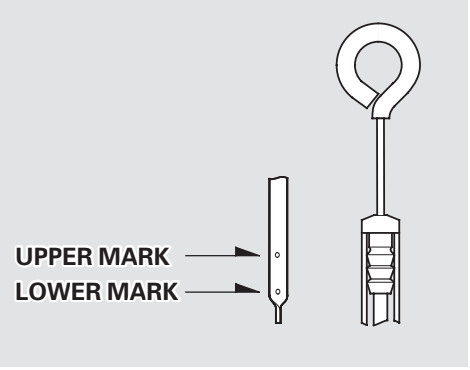

2. Remove the dipstick (yellow loop) from the transmission and wipe it with a clean cloth.

3. Insert the dipstick all the way into the transmission securely as shown in the illustration.

4. Remove the dipstick and check the fluid level. It should be between the upper and lower marks.

5. If the level is below the lower mark, add fluid into the filler hole to bring it to the upper mark. Always use Honda ATF-Z1 (Automatic Transmission Fluid). If it is not available, you may use a DEXRON® III automatic transmission fluid as a temporary replacement. However, continued use can affect shift quality. Have the transmission flushed and refilled with Honda ATF-Z1 as soon as it is convenient.

To thoroughly flush the transmission, the technician should drain and refill it with Honda ATF-Z1 (Automatic Transmission Fluid), then drive the vehicle a short distance. Do this three times. Then drain and refill the transmission a final time.

6. Insert the dipstick all the way back into the transmission securely as shown in the illustration.

The transmission should be drained and refilled with new fluid according to the time and distance recommendations in the maintenance schedule.

5-speed Manual Transmission

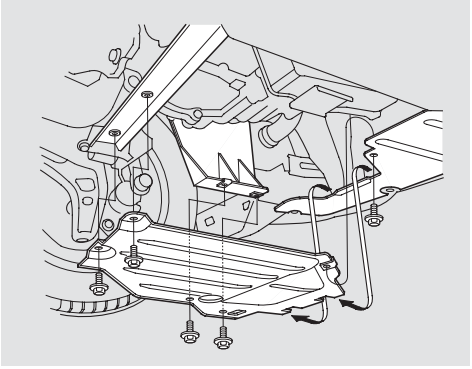

Check the fluid level with the transmission at normal operating temperature and the car sitting on the level ground.
Remove the black cover under the engine.

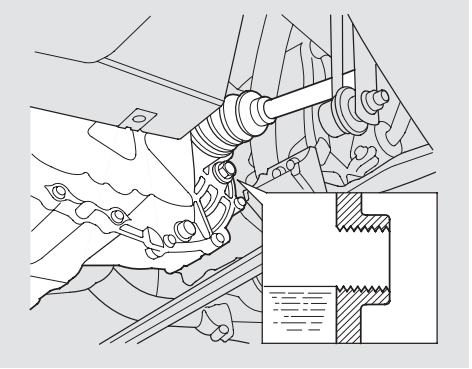

Remove the transmission filler bolt and carefully feel inside the bolt hole with your finger. The fluid level should be up to the edge of the bolt hole. If it is not, add Honda Manual Transmission Fluid (MTF) until it starts to run out of the hole. Reinstall the filler bolt and tighten it securely.

If Honda MTF is not available, you may use an API service SG, SH or SJ grade motor oil with a viscosity of SAE 10W-30 or 10W-40 as a temporary replacement. An SG grade is preferred, but an SH or SJ grade may be used if SG is not available. However, motor oil does not contain the proper additives and continued use can cause stiffer shifting. Replace as soon as it is convenient.

The transmission should be drained and refilled with new fluid according to the time and distance recommendations in the maintenance schedule.

Check the fluid level in the reservoirs monthly. There are up to two reservoirs, depending on the model. They are:

- Brake fluid reservoir (all models)
- Clutch fluid reservoir (manual transmission only)

The brake fluid should be replaced according to the time and distance recommendations in the maintenance schedule.

Always use Honda Heavy Duty Brake Fluid DOT 3. If it is not available, you should use only DOT 3 or DOT 4 fluid, from a sealed container, as a temporary replacement. However, the use of any non-Honda brake fluid can cause corrosion and decrease the life of the system. Have the brake system flushed and refilled with Honda Heavy Duty Brake Fluid DOT 3 as soon as possible.

Brake fluid marked DOT 5 is not compatible with your car's braking system and can cause extensive damage.

Brake System

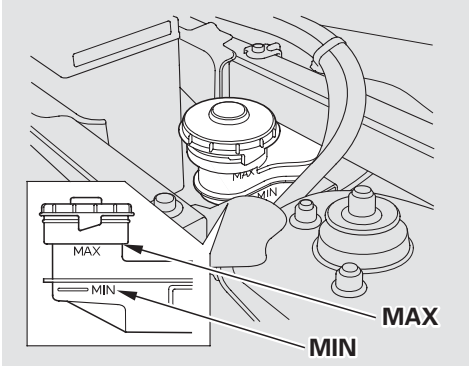

The fluid level should be between the MIN and MAX marks on the side of the reservoir. If the level is at or below the MIN mark, your brake system needs attention. Have the brake system inspected for leaks or worn brake pads.

Clutch System

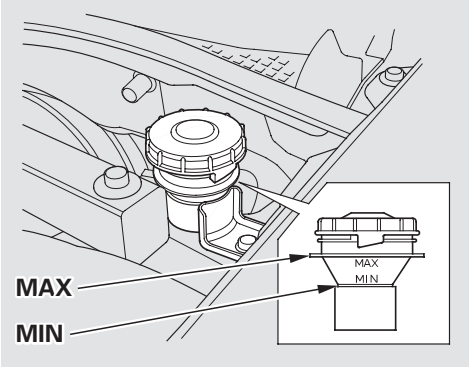

The fluid should be between the MIN and MAX marks on the side of the reservoir. If it is not, add brake fluid to bring it up to that level. Use the same fluid specified for the brake system.

Low fluid level can indicate a leak in the clutch system. Have this system inspected as soon as possible.

The air cleaner element should be replaced according to the time and distance recommendations in the maintenance schedule.

Replacement

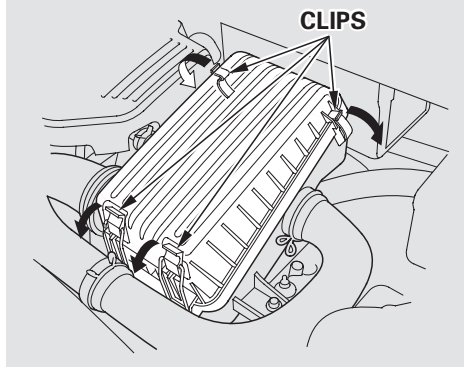

The air cleaner element is inside the air cleaner housing in the engine compartment.

To replace it:

1. Unsnap the four clips and remove the air cleaner housing cover.

2. Remove the old air cleaner element.

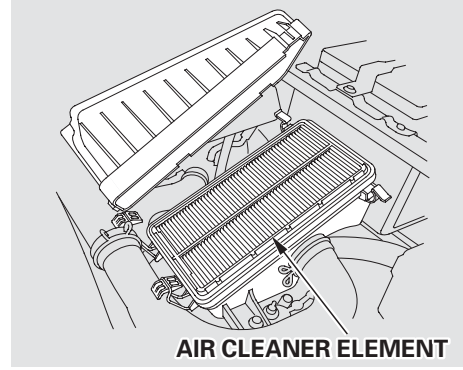

3. Carefully clean the inside of the air cleaner housing with a damp rag.

4. Place the new air cleaner element in the air cleaner housing.

5. Reinstall the air cleaner housing cover, snap the four clips back into place.

Hood Latch

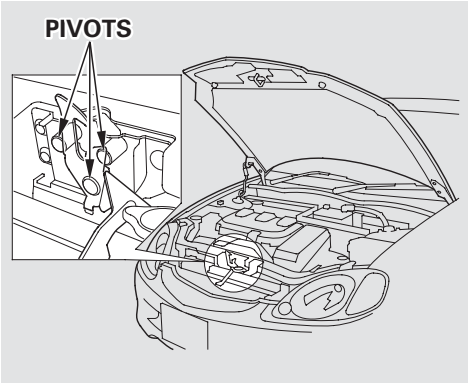

Clean the hood latch assembly with a mild cleaner, then lubricate it with a multipurpose grease. Lubricate all the moving parts, including the pivot. Follow the time and distance recommendations in the Maintenance Schedule. If you are not sure how to clean and grease the latch, contact your Honda dealer.

Check the condition of your car's battery monthly. You should check the color of the test indicator window, and for corrosion on the terminals.

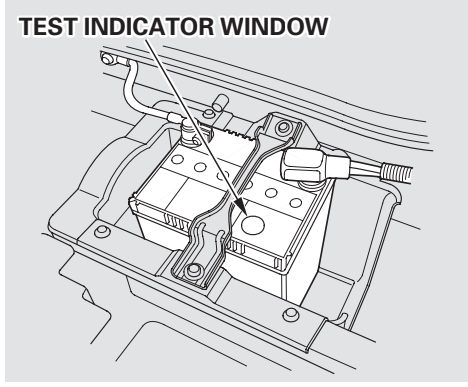

Check the battery condition by looking at the test indicator window on the battery.
The label on the battery explains the test indicator's colors.

Check the battery terminals for corrosion (a white or yellowish powder). To remove it, cover the terminals with a solution of baking soda and water. It will bubble up and turn brown. When this stops, wash it off with plain water. Dry off the battery with a cloth or paper towel. Coat the terminals with grease to help prevent future corrosion.

WARNING: Battery posts, terminals and related accessories contain lead and lead compounds. **Wash hands after handling.**

CONTINUED

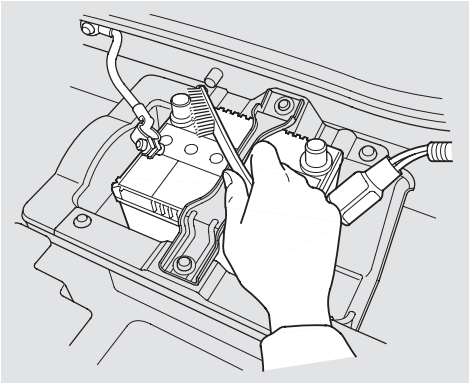

If the terminals are severely corroded, clean them with baking soda and water. Then use a wrench to loosen and remove the cables from the terminals. Always disconnect the negative (−) cable first and reconnect it last. Clean the battery terminals with a terminal cleaning tool or wire brush. Reconnect and tighten the cables, then coat the terminals with grease.

If you need to connect the battery to a charger, disconnect both cables to prevent damage to the car's electrical system.

⚠WARNING

The battery gives off explosive hydrogen gas during normal operation.

A spark or flame can cause the battery to explode with enough force to kill or seriously hurt you.

Wear protective clothing and a face shield, or have a skilled mechanic do the battery maintenance.

NOTICE

Charging the battery with the cables connected can seriously damage your car's electronic controls. Detach the battery cables before connecting the battery to a charger.

Check the condition of the wiper blades at least every six months. Look for signs of cracking in the rubber, or areas that are getting hard. Replace the blades if you find these signs, or they leave streaks and unwiped areas when used.

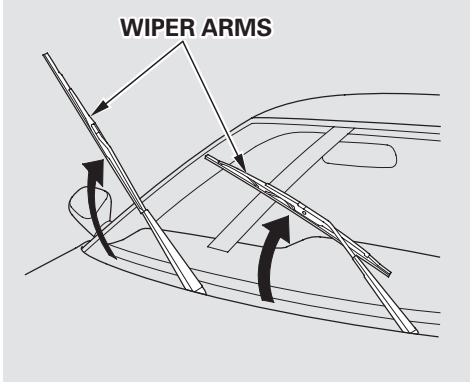

To replace the blade:

1. Raise the wiper arm off the windshield.

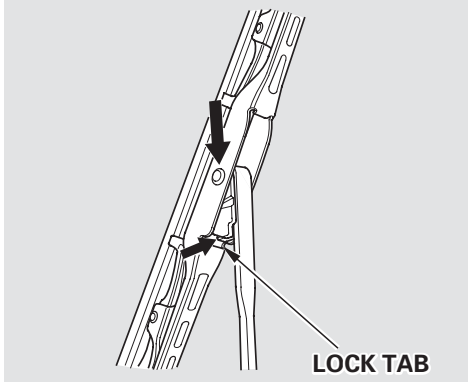

2. Disconnect the blade assembly from the wiper arm by pushing in the lock tab. Hold it in while you push the blade assembly toward the base of the arm.

CONTINUED

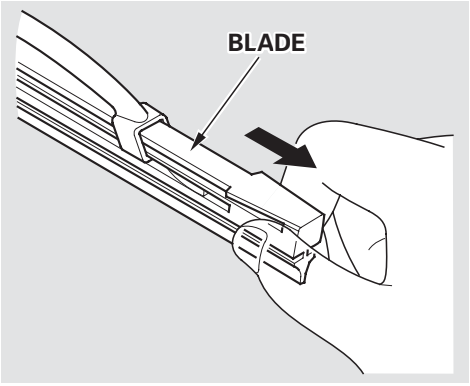

3. Remove the blade from its holder by grasping the tabbed end of the blade. Pull firmly until the tabs come out of the holder.

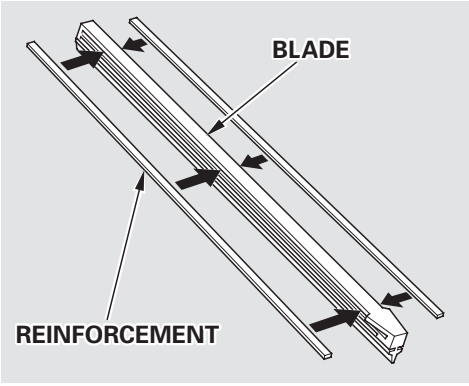

4. Examine the new wiper blades. If they have no plastic or metal reinforcement along the back edge, remove the metal reinforcement strips from the old wiper blade and install them in the slots along the edge of the new blade.

5. Slide the new wiper blade into the holder until the tabs lock.

6. Slide the wiper blade assembly onto the wiper arm. Make sure it locks in place.

7. Lower the wiper arm down against the windshield.

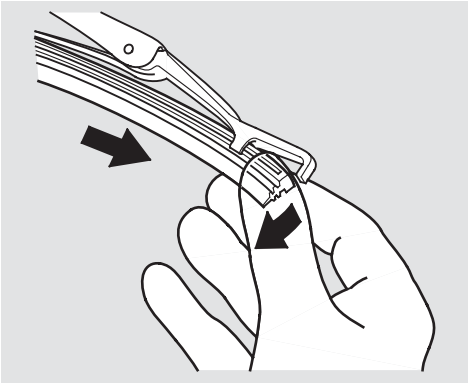

To replace the rear wiper blade:

1. Raise the wiper arm off the windshield.

2. Pull one end of the blade out from the holder.

3. Slide the blade out of the holder.

4. Slide the new blade into the holder. Make sure it is engaged in the slot along its full length.

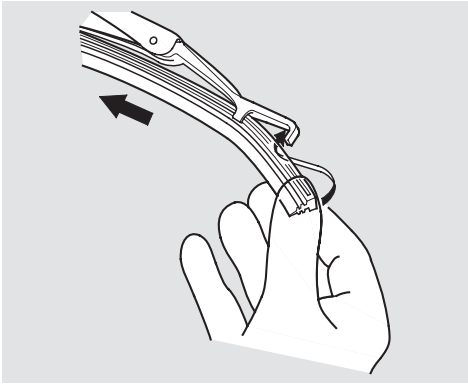

5. Insert both ends of the blade into the holder. Make sure they are secure.

6. Slide the wiper blade assembly onto the wiper arm. Make sure it locks in place.

7. Lower the wiper arm.

Air Conditioning System (Optional)

Your car's air conditioning is a sealed system. Any major maintenance, such as recharging, should be done by a qualified mechanic. You can do a couple of things to make sure the air conditioning works efficiently.

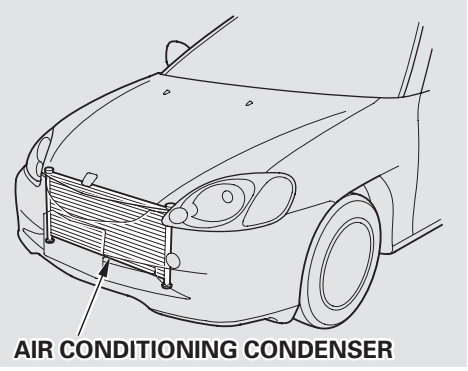

Periodically check the engine's radiator and air conditioning condenser for leaves, insects, and dirt stuck to the front surface. These block the air flow and reduce cooling efficiency. Use a light spray from a hose or a soft brush to remove them.

NOTICE

The condenser and radiator fins bend easily. Only use a low-pressure spray or soft-bristle brush to clean them.

Run the air conditioning at least once a week during the cold weather months. Run it for at least ten minutes while you are driving at a steady speed with the engine at normal operating temperature. This circulates the lubricating oil contained in the refrigerant.

If the air conditioning does not get as cold as before, have your dealer check the system. Recharge the system with Refrigerant HFC-134a (R-134a). (See Specifications on page 245 .)

NOTICE

Whenever you have the air conditioning system serviced, make sure the service facility uses a refrigerant recycling system. This system captures the refrigerant for reuse. Releasing refrigerant into the atmosphere can damage the environment.

Dust and Pollen Filter

The dust and pollen filter removes pollen and dust from the outside air the heating and cooling system brings into the interior. It should be replaced according to the time and distance recommendations in the maintenance schedule.

This filter should be replaced every 30,000 miles (48,000 km) under normal conditions. It should be replaced every 15,000 miles (24,000 km) if you drive primarily in urban areas that have high concentrations of soot in the air from industry and diesel-powered vehicles. Replace it more often if air flow from the climate control system becomes less than usual. Have the dust and pollen filter replaced by your Honda dealer.

Drive Belt

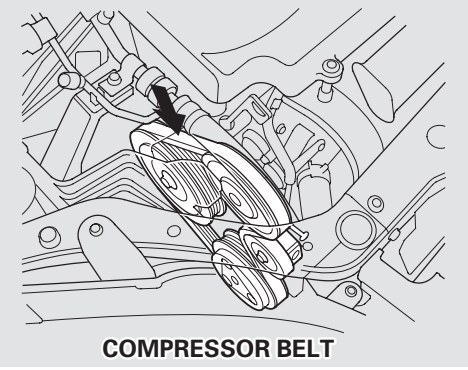
COMPRESSOR BELT

Check the condition of the drive belt. Examine the edges of each belt for cracks or fraying.
Check the tension of each belt by pushing on it with your thumb midway between the pulleys.

The belts should have the following "play" or deflection.

With Air Conditioning System
0.30—0.41 in (7.5—10.5 mm)

Without Air Conditioning System
0.33—0.43 in (8.5—11.0 mm)

If you see signs of wear or looseness, have your dealer adjust or replace the belts.

Tires

To safely operate your car, your tires must be the proper type and size, in good condition with adequate tread, and correctly inflated. The following pages give more detailed information on how and when to check air pressure, how to inspect your tires for damage and wear, and what to do when your tires need to be replaced.

⚠ WARNING

Using tires that are excessively worn or improperly inflated can cause a crash in which you can be seriously hurt or killed.

Follow all instructions in this owner's manual regarding tire inflation and maintenance.

Inflation

Keeping the tires properly inflated provides the best combination of handling, tread life and riding comfort. Underinflated tires wear unevenly, adversely affect handling and fuel economy, and are more likely to fail from being overheated. Overinflated tires can make your car ride more harshly, are more prone to damage from road hazards, and wear unevenly.

We recommend that you visually check your tires every day. If you think a tire might be low, check it immediately with a tire gauge.

Use a gauge to measure the air pressure at least once a month. Even tires that are in good condition may lose one to two psi (10 to 20 kPa, 0.1 to 0.2 kgf/cm²) per month. Remember to check the spare tire at the same time you check all the other tires.

Check the pressure in the tires when they are cold. This means the car has been parked for at least three hours. If you have to drive the car before checking the tire pressure, the tires can still be considered "cold" if you drive less than 1 mile (1.6 km).

If you check the pressure when the tires are hot (the car has been driven several miles), you will see readings 4 to 6 psi (30 to 40 kPa, 0.3 to 0.4 kgf/cm²) higher than the cold reading. This is normal. Do not let air out to match the specified cold pressure. The tire will be underinflated.

You should get your own tire pressure gauge and use it whenever you check your tire pressures. This will make it easier for you to tell if a pressure loss is due to a tire problem and not due to a variation between gauges.

Recommended Tire Pressures for Normal Driving

The following chart shows the recommended cold tire pressures for most normal driving conditions and speeds.

Tire Size	Cold Tire Pressure for Normal Driving
P165/65R14 78S	Front: 38 psi (260 kPa) Rear: 35 psi (240 kPa)

The compact spare tire pressure is:
60 psi (420 kPa)

These pressures are also given on the tire information label on the driver's doorjamb.

Tubeless tires have some ability to self-seal if they are punctured. However, because leakage is often very slow, you should look closely for punctures if a tire starts losing pressure.

Inspection
Every time you check inflation, you should also examine the tires for damage, foreign objects, and wear.

You should look for:

- Bumps or bulges in the tread or side of the tire. Replace the tire if you find either of these conditions.
- Cuts, splits, or cracks in the side of the tire. Replace the tire if you can see fabric or cord.
- Excessive tread wear.

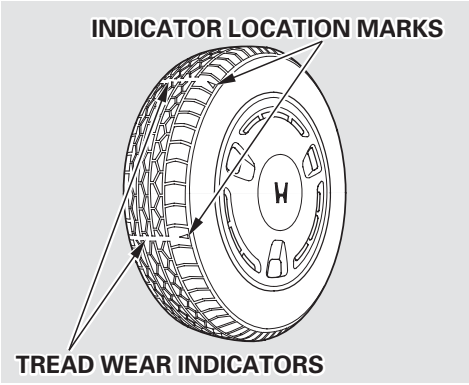

Your car's tires have wear indicators molded into the tread. When the tread wears down to that point, you will see a 1/2 inch (12.7 mm) wide band running across the tread. This shows there is less than 1/16 inch (1.6 mm) of tread left on the tire. A tire that is this worn gives very little traction on wet roads. You should replace the tire if you can see the tread wear indicator in three or more places around the tire.

Maintenance
In addition to proper inflation, correct wheel alignment helps to decrease tire wear. If you find a tire is worn unevenly, have your dealer check the wheel alignment.

The tires were properly balanced by the factory. They may need to be rebalanced at some time before they are worn out. Have your dealer check the tires if you feel a consistent vibration while driving. A tire should always be rebalanced if it is removed from the wheel for repair.

Make sure the installer balances the wheels when you have new tires installed. This increases riding comfort and tire life. Your car's original tires were dynamic or "spin" balanced at the factory. For best results, have the installer perform a dynamic balance.

Tire Rotation

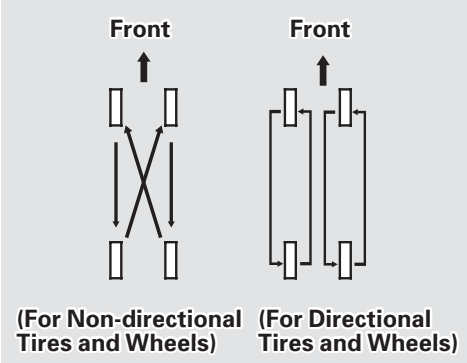

To help increase tire life and distribute wear more evenly, you should have the tires rotated every 7,500 miles (12,000 km). Move the tires to the positions shown in the chart each time they are rotated.

When shopping for replacement tires, you may find that some tires are "directional." This means they are designed to rotate only in one direction. If you use directional tires, they should be rotated only front-to-back.

Replacing Tires and Wheels

The tires that came with your car were selected to match the performance capabilities of the car while providing the best combination of handling, ride comfort, and long life. You should replace them with radial tires of the same size, load range, speed rating, and maximum cold tire pressure rating (as shown on the tire's sidewall). Mixing radial and bias-ply tires on your car can reduce its braking ability, traction, and steering accuracy.

CONTINUED

⚠ WARNING

Installing improper tires on your car can affect handling and stability. This can cause a crash in which you can be seriously hurt or killed.

Always use the size and type of tires recommended in this owner's manual.

It is best to replace all four tires at the same time. If that is not possible or necessary, then replace the two front tires or the two rear tires as a pair. Replacing just one tire can seriously affect your car's handling.

If you ever need to replace a wheel, make sure the wheel's specifications match those of the original wheel that came on your car. Replacement wheels are available at your Honda dealer.

Wheels and Tires

Wheels:
14 x 5 1/2 JJ

Tires:
P165/65R14 78S

See page 236 for information about DOT Tire Quality Grading.

Winter Driving

Tires that are marked "M+S" or "All Season" on the sidewall have an all-weather tread design. They should be suitable for most winter driving conditions. Tires without these markings are designed for optimum traction in dry conditions. They may not provide adequate performance in winter driving.

For the best performance in snowy or icy conditions, you should install snow tires or tire chains. They may be required by local laws under certain conditions.

Snow Tires

If you mount snow tires on your Honda, make sure they are radial tires of the same size and load range as the original tires. Mount snow tires on all four wheels to balance your car's handling in all weather conditions. Keep in mind the traction provided by snow tires on dry roads may not be as high as your car's original equipment tires. You should drive cautiously even when the roads are clear. Check with the tire dealer for maximum speed recommendations.

Tire Chains

Mount snow chains on your vehicle when warranted by driving conditions or required by local laws. Make sure the chains are the correct size for your tires. Install them only on the front tires. If metal chains are used, they must be SAE class "S." Cable type traction devices can also be used.

When installing chains, follow the manufacturer's instructions and mount them as tightly as you can. Drive slowly with chains installed. If you hear the chains contacting the body or chassis, stop and investigate. Make sure the chains are installed tightly, and that they are not contacting the brake lines or suspension. Remove the chains as soon as you begin driving on cleared roads.

NOTICE

Chains of the wrong size or that are improperly installed can damage your car's brake lines, suspension, body, and wheels. Stop driving if you hear the chains hitting any part of the car.

Lights

Check the operation of your car's exterior lights at least once a month. A burned out bulb can create an unsafe condition by reducing your car's visibility and the ability to signal your intentions to other drivers.

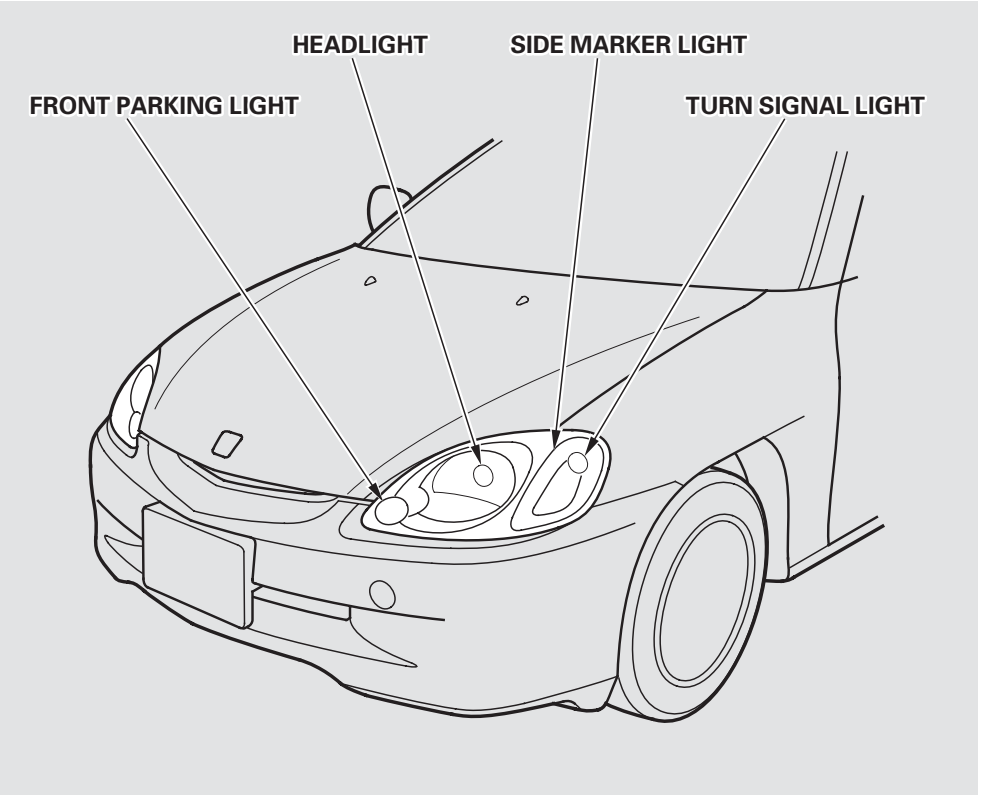

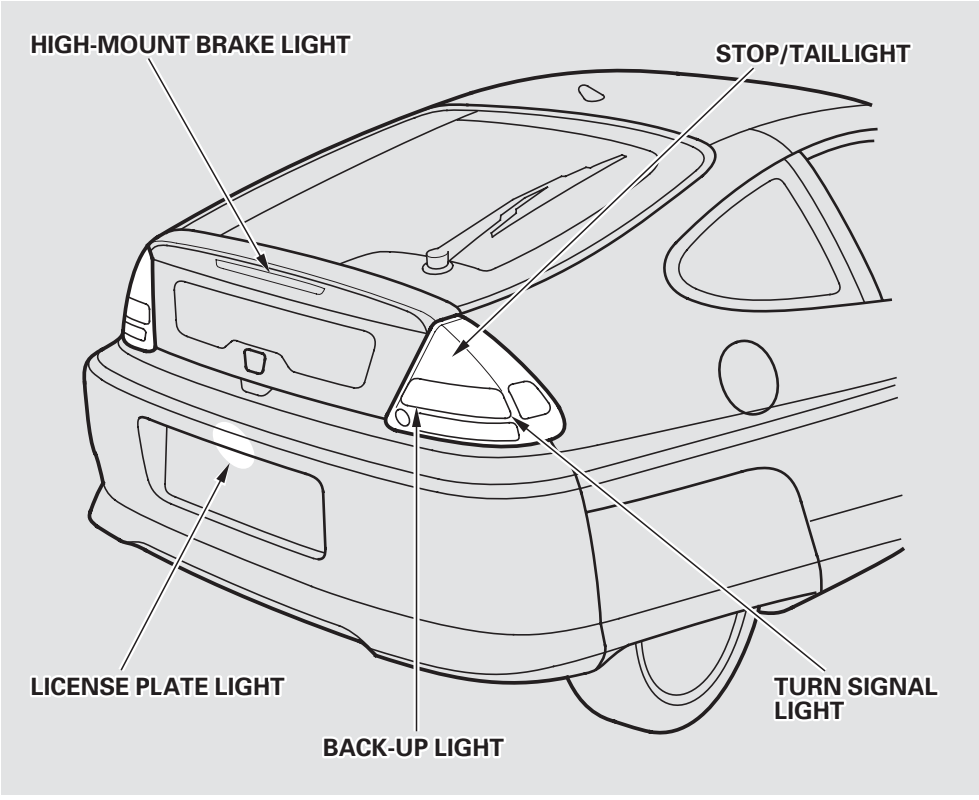

Check the following:

- Headlights (low and high beam)
- Parking lights
- Taillights
- Brake lights
- High-mount brake light
- Turn signals
- Back-up lights
- Hazard light function
- License plate light
- Side marker lights
- Daytime running lights (Canadian models)

If you find any bulbs are burned out, replace them as soon as possible. Refer to the chart on page 243 to determine what type of replacement bulb is needed.

Headlight Aiming

The headlights were properly aimed when your vehicle was new. If you regularly carry heavy items in the cargo area, readjustment may be required. Adjustment of the headlights should be performed by a Honda technician or other qualified mechanic.

Replacing a Headlight Bulb

Your car has halogen headlight bulbs, one on each side. When replacing a bulb, handle it by its steel base and protect the glass from contact with your skin or hard objects. If you touch the glass, clean it with denatured alcohol and a clean cloth.

NOTICE

Halogen headlight bulbs get very hot when lit. Oil, perspiration, or a scratch on the glass can cause the bulb to overheat and shatter.

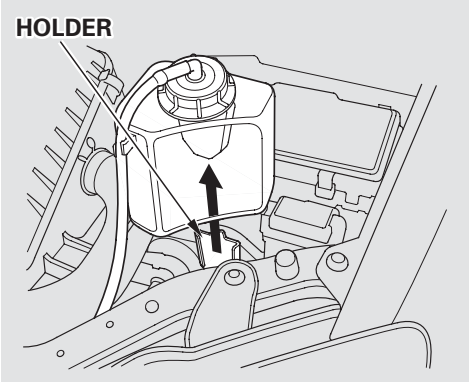

1. Open the hood.

   If you need to change the headlight bulb on the driver's side, remove the engine coolant reservoir tank by pulling it out of its holder.

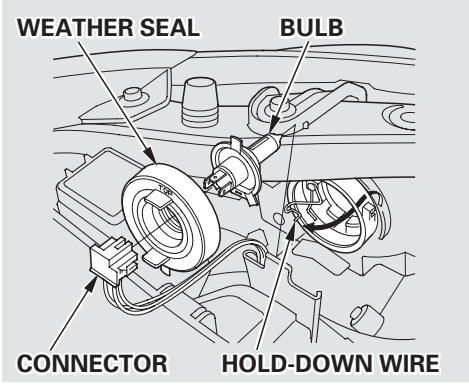

2. Remove the electrical connector from the bulb by squeezing the connector on both sides to unlock the tab. Pull the connector straight off.

3. Remove the rubber weather seal by pulling on the tab.

4. Unclip the end of the hold-down wire from its slot. Pivot it out of the way and remove the bulb.

5. Insert the new bulb into the hole, making sure the tabs are in their slots. Pivot the hold-down wire back in place and clip the end into the slot.

6. Install the rubber seal over the back of the headlight assembly. Make sure it is right side up; it is marked “TOP.”

7. Push the electrical connector onto the tabs of the new bulb. Make sure it locks in place.
   Turn on the headlights to test the new bulb.

8. Reinstall the radiator reserve tank.

Replacing the Front Parking Lights

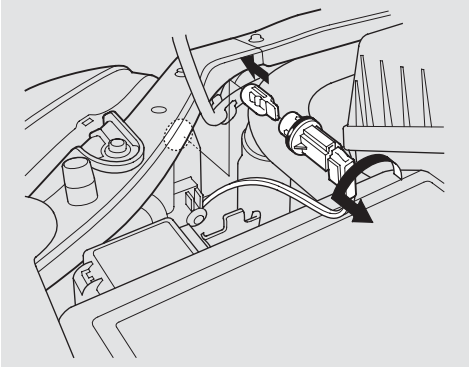

1. Remove the socket from the headlight assembly by turning it one-quarter turn counterclockwise.

2. Pull the bulb straight out of its socket.

3. Install the new bulb into the socket.

4. Insert the socket back into the headlight assembly. Turn it clockwise to lock it in place.

5. Test the lights to make sure the new bulb is working.

Replacing the Front Side Marker/ Turn Signal and Parking Light Bulb

1. If you are changing the bulb on the driver’s side, start the engine, turn the steering wheel all the way to the right, and turn off the engine. If you are changing the bulb on the passenger’s side, turn the steering wheel to the left.

CONTINUED

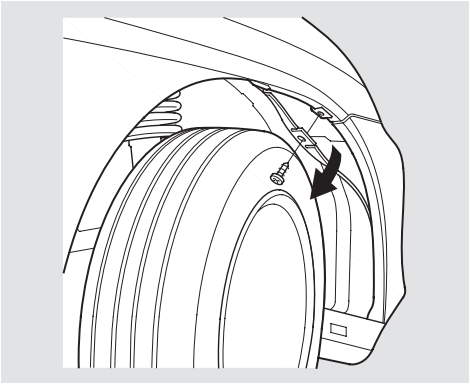

2. Use a Phillips-head screwdriver to remove the screw from the top of the fender.

3. Pull the inner fender cover back.

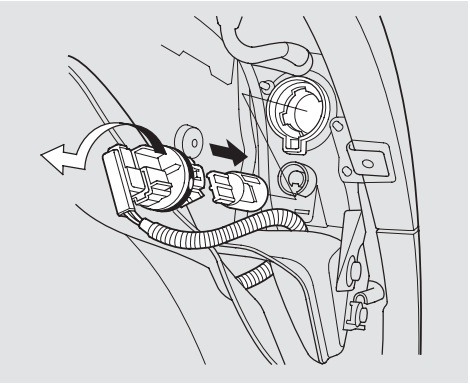

4. Remove the socket from the headlight assembly by turning it one-quarter turn counterclockwise.

5. Remove the burned out bulb from the socket by pushing it in and turning counterclockwise until it unlocks.

6. Install the new bulb in the socket. Turn it clockwise to lock it in place.

7. Insert the socket back into the headlight assembly. Turn it clockwise to lock it in place.

8. Test the lights to make sure the new bulb is working.

9. Put the inner fender cover in place. Tighten the screw securely.

Replacing Rear Bulbs

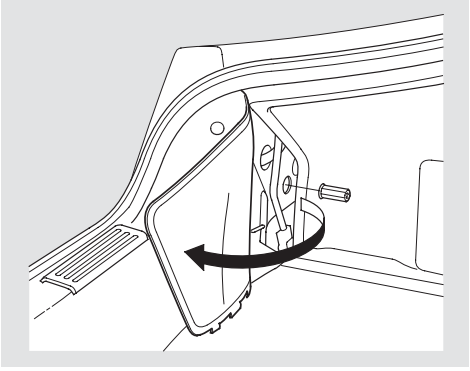

1. Open the hatch.

2. Pull the cover back.

3. Loosen the nut holding the rear light assembly.

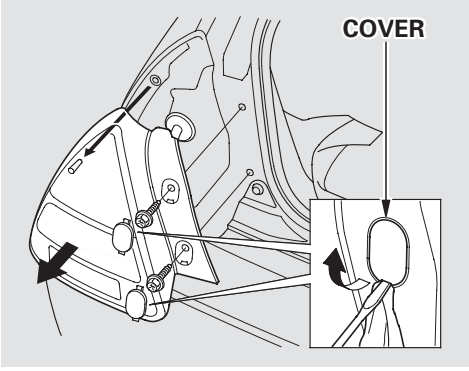

4. Remove the two covers. Remove the two screws holding the rear light assembly. Remove the light assembly.

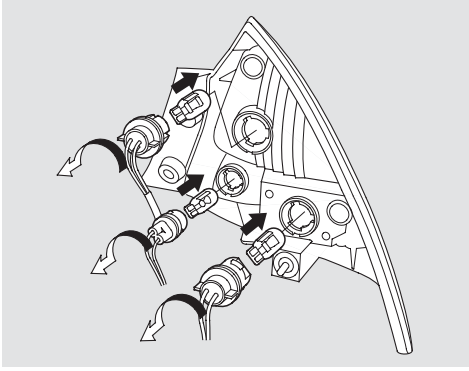

5. Determine which bulb, stop/taillight, back-up light, side marker light or turn signal is burned out. Remove the socket for that bulb by turning counterclockwise.

6. Pull the bulb straight out of its socket.

7. Push the new bulb straight into the socket until it bottoms.

CONTINUED

8. Reinstall the socket into the light assembly by turning it clockwise until it locks.

9. Test the lights to make sure the new bulb is working.

10. Reinstall the light assembly and tighten the two screws and nut.

11. Reinstall the two covers.

Replacing a Rear License Plate Bulb

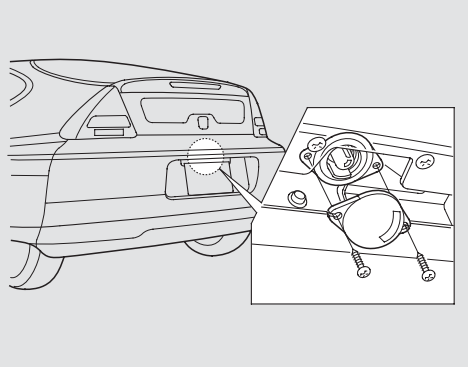

1. Use a Phillips-head screwdriver to remove the two screws holding the license plate light lens.

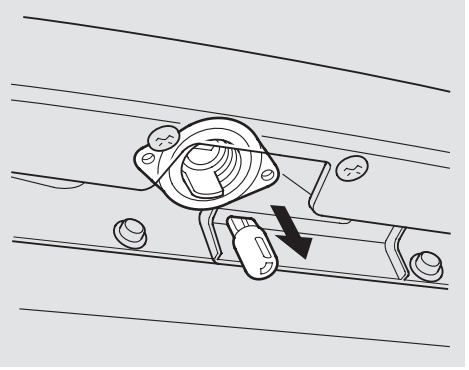

2. Pull the bulb straight out of its socket.
3. Push the new bulb straight into the socket until it bottoms.
4. Turn on the parking lights and check that the new bulb is working.
5. Reinstall the two screws and tighten them securely.

Replacing an Interior Light Bulb

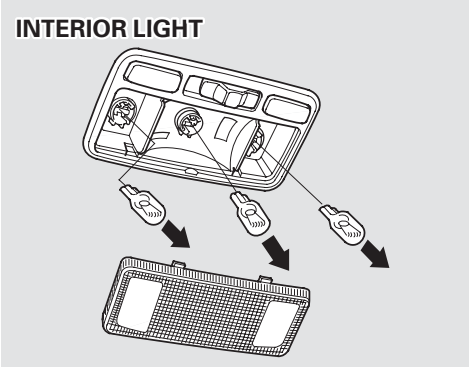

1. Remove the lens by carefully prying on the edge of the lens in the middle with a fingernail file or a small flat-tip screwdriver. Do not pry on the edge of the housing around the lens.

2. Remove the bulb by pulling it straight out of its metal tabs.

3. Push the new bulb into the metal tabs. Snap the lens back in place.

Replacing the Cargo Area Light

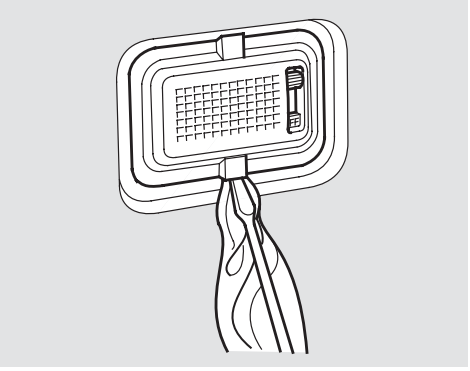

1. Remove the lens by carefully prying on the edge of the lens in the middle with a fingernail file or a small flat-tip screwdriver. Do not pry on the edge of the housing around the lens.

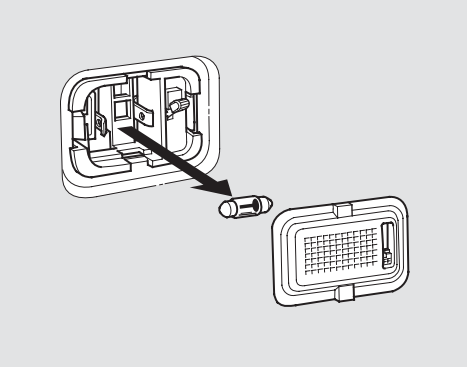

Storing Your Car

If you need to park your car for an extended period (more than one month), there are several things you should do to prepare it for storage. Proper preparation helps prevent deterioration and makes it easier to get your car back on the road. If possible, store your car indoors.

- Fill the fuel tank.
- Change the engine oil and filter (see page 169).
- Wash and dry the exterior completely.
- Clean the interior. Make sure the carpeting, floor mats, etc. are completely dry.
- Leave the parking brake off. Put the transmission in Reverse (5-speed manual) or Park (CVT).
- Block the rear wheels.
- If the car is to be stored for a longer period, it should be supported on jackstands so the tires are off the ground.
- Leave one window open slightly (if the car is being stored indoors).
- Disconnect the battery.
- Support the front and rear wiper blade arms with a folded towel or rag so they do not touch the windshield.
- To minimize sticking, apply a silicone spray lubricant to all door and hatch seals. Also, apply a body wax to the painted surfaces that mate with the door and hatch seals.
- Cover the car with a “breathable” cover, one made from a porous material such as cotton. Nonporous materials, such as plastic sheeting, trap moisture, which can damage the paint.
- Drive your car every month for about 30 minutes. This will keep the IMA battery charged and in good condition.

If you store your car for 12 months or longer, have your Honda dealer perform the inspections called for in the 24 months/30,000 miles (48,000 km) maintenance schedule (Normal Conditions) as soon as you take it out of storage (see page 158). The replacements called for in the maintenance schedule are not needed unless the car has actually reached that time or mileage.

Regular cleaning and polishing of your Honda helps to keep it “new” looking. This section gives you hints on how to clean your car and preserve its appearance: the paint, brightwork, wheels and interior. Also included are several things you can do to help prevent corrosion.

Exterior Care 208
Roof Antenna 208
Rear Wheel Skirt 208
Washing 209
Waxing 210
Paint Touch-up 210
Interior Care 211
Carpeting 211
Fabric 211
Vinyl 211
Seat Belts 211
Windows 212
Air Fresheners 212
Corrosion Protection 212
Body Repairs 213

Roof Antenna

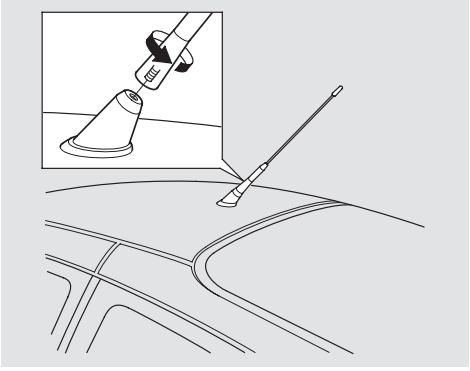

Before using an automatic car wash, remove the radio antenna so it does not get damaged. Remove the antenna by unscrewing it. When you reinstall the antenna, tighten it securely.

Rear Wheel Skirt

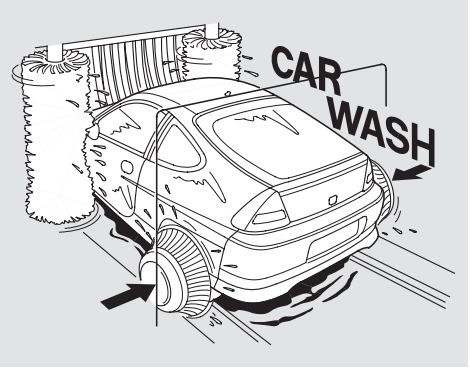

If an automatic car wash has tire cleaning brushes, remove the skirts covering the rear wheels so they will not be damaged. See page 218 for how to remove and install the skirts.

NOTICE

Although almost all exterior panels on your Honda are made of hardened aluminum, they may dent more easily than steel under some conditions. Exercise care when leaning on or over any part of the body.

Washing

Frequent washing helps preserve your car's beauty. Dirt and grit can scratch the paint, while tree sap and bird droppings can permanently ruin the finish.

Wash your car in a shady area, not in direct sunlight. If the car is parked in the sun, move it into the shade and let the exterior cool down before you start.

Only use the solvents and cleaners recommended in this Owner's Manual.

NOTICE

Chemical solvents and strong cleaners can damage the paint, metal, and plastic on your car.

- Rinse the car thoroughly with cool water to remove loose dirt.
- Fill a bucket with cool water. Mix in a mild detergent, such as dishwashing liquid or a product made especially for car washing.
- Wash the car using the water and detergent solution and a soft-bristle brush, sponge, or soft cloth. Start at the top and work your way down. Rinse frequently.
- Check the body for road tar, tree sap, etc. Remove these stains with tar remover or turpentine. Rinse it off immediately so it does not harm the finish. Remember to re-wax these areas, even if the rest of the car does not need waxing.
- When you have washed and rinsed the whole exterior, dry it with a chamois or soft towel. Letting it air-dry will cause dulling and water spots.

As you dry the car, inspect it for chips and scratches that could allow corrosion to start. Repair them with touch-up paint (see page 210).

Waxing
Always wash and dry the whole car before waxing it. You should wax your car, including the metal trim, whenever water sits on the surface in large patches. It should form into beads or droplets after waxing.

You should use a quality liquid or paste wax. Apply it according to the instructions on the container. In general, there are two types of products:

Waxes — A wax coats the finish and protects it from damage by exposure to sunlight, air pollution, etc. You should use a wax on your Honda when it is new.

Polishes — Polishes and cleaner/waxes can restore the shine to paint that has oxidized and lost some of its shine. They normally contain mild abrasives and solvents that remove the top layer of the finish. You should use a polish on your Honda if the finish does not have its original shine after using a wax.

Cleaning tar, insects, etc. with removers also takes off the wax. Remember to re-wax those areas, even if the rest of the car does not need waxing.

Aluminum Wheels
Clean your Honda's aluminum alloy wheels as you do the rest of the exterior. Wash them with the same solution, and rinse them thoroughly.

The wheels have a protective clear-coat that keeps the aluminum from corroding and tarnishing. Using harsh chemicals, including some commercial wheel cleaners, or stiff brushes can damage this clear-coat. Only use a mild detergent and soft brush or sponge to clean the wheels.

Paint Touch-up
Your dealer has touch-up paint to match your car's color. The color code is printed on a sticker on the driver's doorjamb. Take this code to your dealer so you are sure to get the correct color.

Inspect your car frequently for chips or scratches in the paint. Repair them right away to prevent corrosion of the metal underneath. Use the touch-up paint only on small chips and scratches. More extensive paint damage should be repaired by a professional.

Carpeting
Vacuum the carpeting frequently to remove dirt. Ground-in dirt will make the carpet wear out faster. Periodically shampoo the carpet to keep it looking new. Use one of the foam-type carpet cleaners on the market. Follow the instructions that come with the cleaner, applying it with a sponge or soft brush. Keep the carpeting as dry as possible by not adding water to the foam.

Fabric
Vacuum dirt and dust out of the material frequently. For general cleaning, use a solution of mild soap and lukewarm water, letting it air dry. To clean off stubborn spots, use a commercially-available fabric cleaner. Test it on a hidden area of the fabric first, to make sure it does not bleach or stain the fabric. Follow the instructions that come with the cleaner.

Vinyl
Remove dirt and dust with a vacuum cleaner. Wipe the vinyl with a soft cloth dampened in a solution of mild soap and water. Use the same solution with a soft-bristle brush on more difficult spots. You can also use commercially-available spray or foam-type vinyl cleaners.

Seat Belts
If your seat belts get dirty, you can use a soft brush with a mixture of mild soap and warm water to clean them. Do not use bleach, dye, or cleaning solvents. They can weaken the belt material. Let the belts air-dry before you use the car.

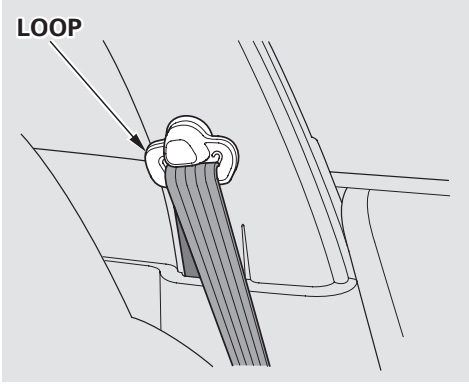

Dirt build-up in the loops of the seat belt anchors can cause the belts to retract slowly. Wipe the insides of the loops with a clean cloth dampened in mild soap and warm water or isopropyl alcohol.

Windows

Clean the windows, inside and out, with a commercially-available glass cleaner. You can also use a mixture of one part white vinegar to ten parts water. This will remove the haze that builds up on the inside of the windows. Use a soft cloth or paper towels to clean all glass and clear plastic surfaces.

NOTICE

The rear window defogger wires are bonded to the inside of the glass. Wiping vigorously up-and-down can dislodge and break the defogger wires. When cleaning the rear window, use gentle pressure and wipe side-to-side.

Air Fresheners

If you want to use an air freshener/deodorizer in the interior of your car, it is best to use a solid type. Some liquid air fresheners contain chemicals that may cause parts of the interior trim and fabric to crack or discolor.

If you use a liquid air freshener, make sure you fasten it securely so it does not spill as you drive.

Corrosion Protection

Two factors normally contribute to causing corrosion in your car:

1. Moisture trapped in body cavities. Dirt and road salt that collects in hollows on the underside of the car stays damp, promoting corrosion in that area.

2. Removal of paint and protective coatings from the exterior and underside of the car.

Many corrosion-preventive measures are built into your Honda. You can help keep your car from corroding by performing some simple periodic maintenance:

- Repair chips and scratches in the paint as soon as you discover them.

- Inspect and clean out the drain holes in the bottom of the doors and body.

- Check the floor coverings for dampness. Carpeting and floor mats may remain damp for a long time, especially in winter. This dampness can eventually cause the floor panels to corrode.

- Use a high-pressure spray to clean the underside of your car. This is especially important in areas that use road salt in winter. It is also a good idea in humid climates and areas subject to salt air.

- Have the corrosion-preventive coatings on the underside of your car inspected and repaired periodically.

Body Repairs

Body repairs can affect your car's resistance to corrosion. If your car needs repairs after a collision, pay close attention to the parts used in the repair and the quality of the work.

Make sure the repair facility uses genuine Honda replacement body parts. Some companies make sheet metal pieces that seem to duplicate the original Honda body parts, but are actually inferior in fit, finish, and corrosion resistance. Once installed, they do not give the same high-quality appearance.

When reporting your collision to the insurance company, tell them you want genuine Honda parts used in the repair. Although most insurers recognize the quality of original parts, some may try to specify that the repairs be done with other available parts. You should investigate this before any repairs have begun.

Take your car to your authorized Honda dealer for inspection after the repairs are completed. Your dealer can make sure that quality materials were used, and that corrosion-preventive coatings were applied to all repaired and replaced parts.

This section covers the more-common problems that motorists experience with their vehicles. It gives you information about how to safely evaluate the problem and what to do to correct it. If the problem has stranded you on the side of the road, you may be able to get going again. If not, you will also find instructions on getting your car towed.

Compact Spare Tire..... 216
Changing a Flat Tire 217
If Your Engine Won't Start..... 223
Nothing Happens or the Starter Motor Operates Very Slowly..... 223
The Starter Operates Normally 224
Jump Starting 224
If Your Engine Overheats..... 227
Low Oil Pressure Indicator 228
Charging System Indicator..... 229
Malfunction Indicator Lamp 230
Brake System Indicator 232
Fuses 233
Checking and Replacing 234
Emergency Towing 239

Compact Spare Tire

Your car has a compact spare tire that takes up less space. Use this spare tire as a temporary replacement only. Get your regular tire repaired or replaced and put it back on your car as soon as you can.

Check the inflation pressure of the compact spare tire every time you check the other tires. It should be inflated to:
60 psi (420 kPa)

Follow these precautions whenever you are using the compact spare tire:

- Do not exceed 50 mph (80 km/h) under any circumstances.
- This tire gives a harsher ride and less traction on some road surfaces than the regular tire. Use greater caution while driving on this tire.
- Do not mount snow chains on the compact spare.
- The wheel of the compact spare tire is designed especially to fit your car. Do not use your spare tire on another vehicle unless it is the same make and model.

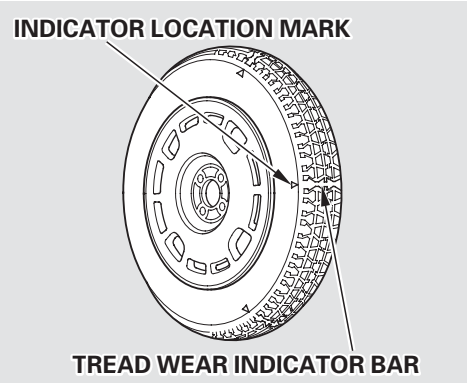

The compact spare tire has a shorter tread life than a regular tire. Replace it when you can see the tread wear indicator bars. The replacement should be the same size and design tire, mounted on the same wheel. The compact spare tire is not designed to be mounted on a regular wheel, and the compact wheel is not designed for mounting a regular tire.

If you have a flat tire while driving, stop in a safe place to change it. Stopping in traffic or on the shoulder of a busy road is dangerous. Drive slowly along the shoulder until you get to an exit or an area to stop that is far away from the traffic lanes.

⚠WARNING

The car can easily roll off the jack, seriously injuring anyone underneath.

Follow the directions for changing a tire exactly, and never get under the car when it is supported only by the jack.

1. Park the car on firm, level and non-slippery ground away from traffic. Put the transmission in Reverse (5-speed manual) or Park (CVT). Apply the parking brake.

2. Turn on the hazard warning lights and turn the ignition switch to LOCK (0). Have all the passengers get out of the car while you change the tire.

3. Open the hatch. Raise the cargo area floor by lifting up on the back edge.

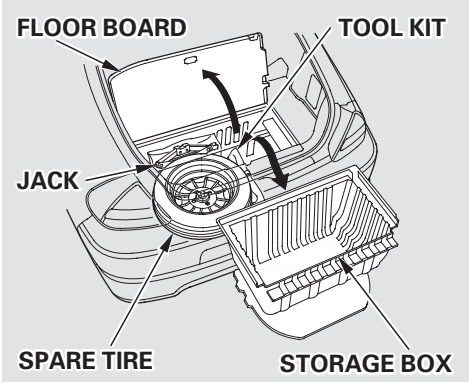

4. Remove the storage box from the cargo area well.

5. Take the tool kit from the spare tire well. Remove the jack (in the jack cover) from the inside of the spare tire.

6. Unscrew the wing bolt and take the spare tire out of its well.

CONTINUED

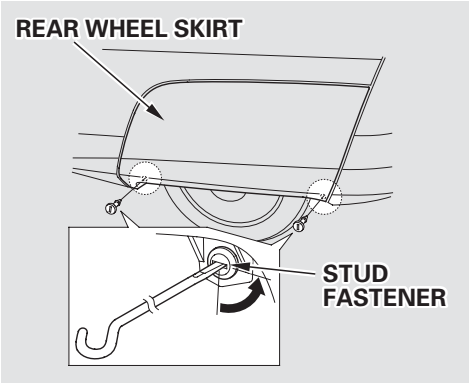

1. Rear tire only:
   Use the end of the extension or a flat-tipped screwdriver to loosen the two stud fasteners holding the rear wheel skirt.

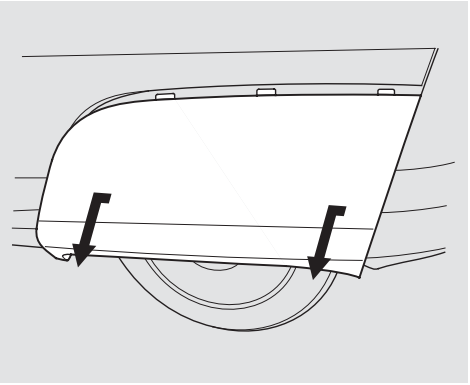

2. Pull the rear wheel skirt downward.

   Do not catch your clothes or hands on the hooks on the rear fender when you replace the wheel.

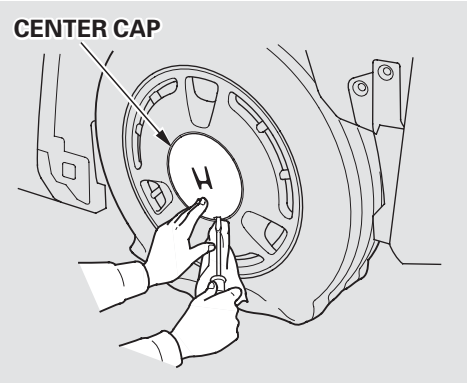

3. Remove the center cap from the wheel with the end of the extension or a flat-tipped screwdriver.

4. Loosen the four wheel nuts 1/2 turn with the wheel wrench.

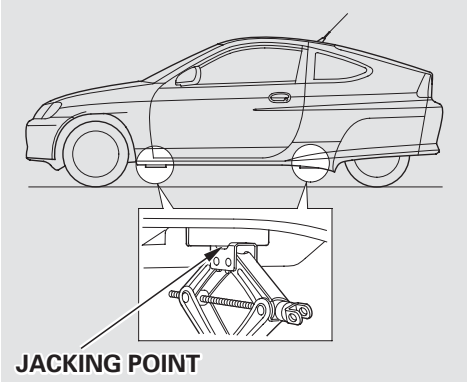

5. Locate the jacking point nearest the tire you need to change. It is pointed to by an arrow molded into the underside of the body. Place the jack under the jacking point. Turn the end bracket clockwise until the top of the jack contacts the jacking point. Make sure the jacking point tab is resting in the jack notch.

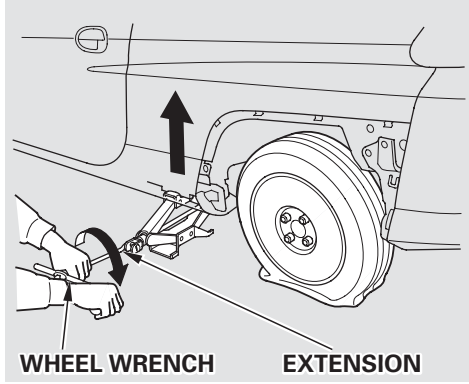

6. Use the extension and wheel wrench as shown to raise the car until the flat tire is off the ground.

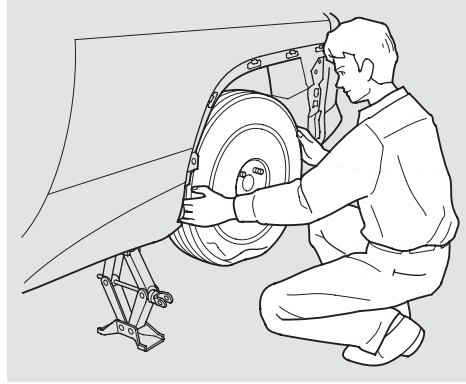

7. Remove the wheel nuts and flat tire. Temporarily place the flat tire on the ground with the outside surface of the wheel facing up. You could scratch the wheel if you put it face down.

CONTINUED

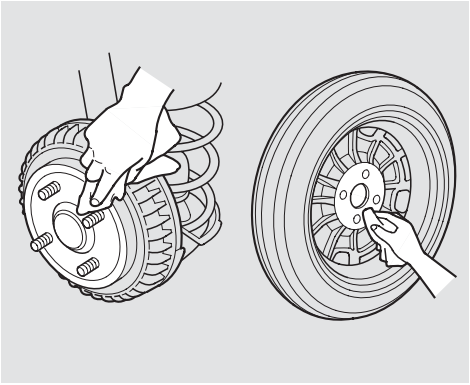

8. Before mounting the spare tire, wipe any dirt off the mounting surface of the wheel and hub with a clean cloth. Wipe the hub carefully, it may be hot from driving.

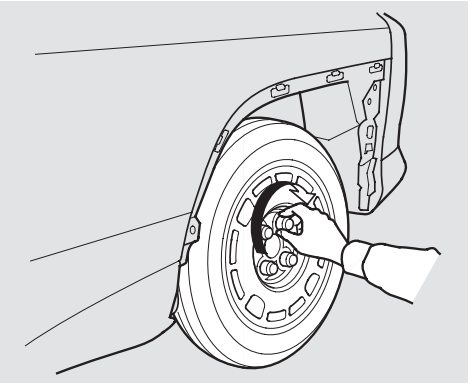

9. Put on the spare tire. Put the wheel nuts back on finger-tight, then tighten them in a crisscross pattern with the wheel wrench until the wheel is firmly against the hub. Do not try to tighten them fully.

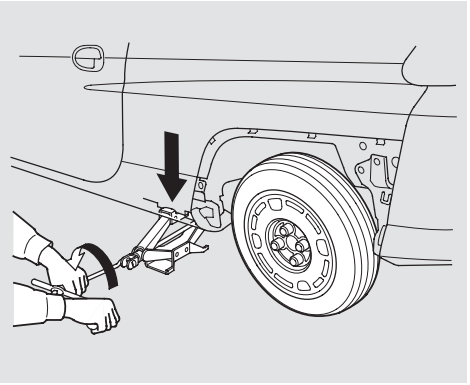

10. Lower the car to the ground and remove the jack.

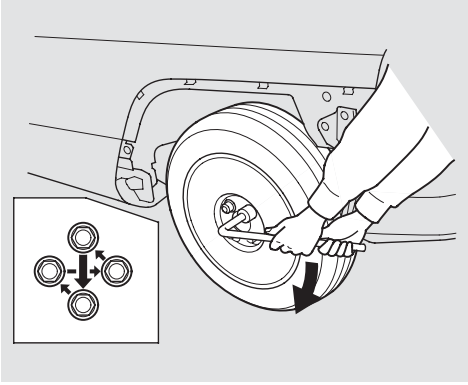

11. Tighten the wheel nuts securely in the same crisscross pattern. Have the wheel nut torque checked at the nearest automotive service facility.
    Tighten the wheel nuts to:
    80 lbf·ft (108 N·m , 11 kgf·m)

    Do not catch your clothes or hands on the hooks on the rear fender when you replace the wheel.

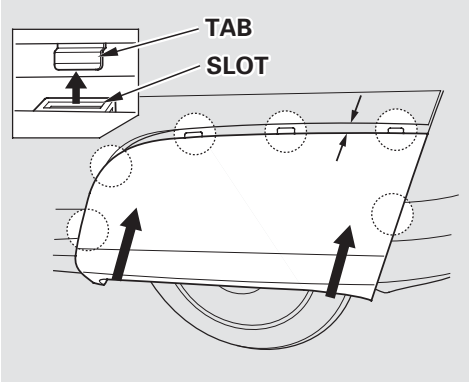

12. To install the rear wheel skirt, place the skirt against the body. Line up the slots on the skirt with the tabs in the body, then push the skirt upward.

    Make sure the wheel skirt is installed correctly.

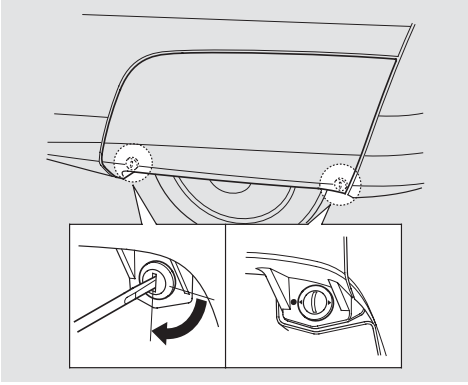

13. Tighten the two stud fasteners. Align the ▼ marks on the stud fastener with the ● marks on the wheel skirt.

It is not recommended to drive your car without the wheel skirts.
It will affect the fuel consumption.

CONTINUED

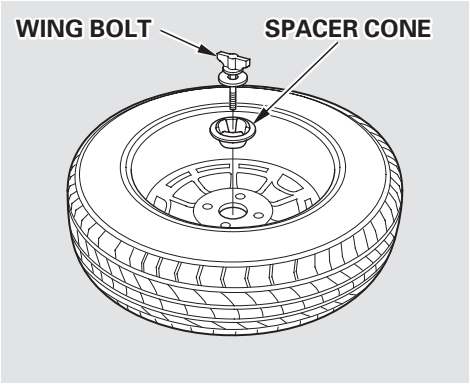

14. Remove the center cap.
    Place the flat tire face down in the spare tire well.

15. Remove the spacer cone from the wing bolt, turn it over, and put it back on the bolt.

16. Secure the flat tire by screwing the wing bolt back into its hole.

17. Store the jack and tool kit back in the spare tire well.

⚠ WARNING

Loose items can fly around the interior in a crash and could seriously injure the occupants.

Store the wheel, jack and tools securely before driving.

18. Store the wheel cover or center cap in the spare tire well. Make sure it does not get scratched or damaged.

19. Install the storage box in the cargo area well.

20. Lower the cargo area floor, then close the hatch.

Diagnosing why your engine won't start falls into two areas, depending on what you hear when you turn the key to START (III):

- You hear nothing, or almost nothing. The engine's starter motor does not operate at all, or operates very slowly.
- You can hear the starter motor operating normally, or the starter motor sounds like it is spinning faster than normal, but the engine does not start up and run.

Nothing Happens or the Starter Motor Operates Very Slowly

When you turn the ignition switch to START (III), you do not hear the normal noise of the engine trying to start. You may hear a clicking sound or series of clicks, or nothing at all. Check these things:

- Your car has the Immobilizer System. You should use a properly-coded master or valet key to start the engine (see page 68). A key that is not properly coded will cause the immobilizer system indicator in the dash panel to blink rapidly.
- Turn the ignition switch to ON (II). Turn on the headlights and check their brightness. If the headlights are very dim or don't light at all, the battery is discharged. See **Jump Starting** on page 224 .
- Turn the ignition switch to START (III). If the headlights do not dim, check the condition of the fuses. If the fuses are OK, there is probably something wrong with the electrical circuit for the ignition switch or starter motor. You will need a qualified technician to determine the problem. (See **Emergency Towing** on page 237 .)

  If the headlights dim noticeably or go out when you try to start the engine, either the battery is discharged or the connections are corroded. Check the condition of the battery and terminal connections (see page 185). You can then try jump starting the car from a booster battery (see page 224).

The Starter Operates Normally
In this case, the starter motor's speed sounds normal, or even faster than normal, when you turn the ignition switch to START (III), but the engine does not run.

- Are you using the proper starting procedure? Refer to **Starting the Engine** on page 135 .
- Do you have fuel? Turn the ignition switch to ON (II) for a minute and watch the fuel gauge. The low fuel level warning light may not be working, so you were not reminded to fill the tank.
- There may be an electrical problem, such as no power to the fuel pump. Check all the fuses (see page 233).

If you find nothing wrong, you will need a qualified technician to find the problem. See **Emergency Towing** on page 239 .

Jump Starting
If your car's battery has run down, you may be able to start the engine by using a booster battery. Although this seems like a simple procedure, you should take several precautions.

⚠WARNING

A battery can explode if you do not follow the correct procedure, seriously injuring anyone nearby.

Keep all sparks, open flames, and smoking materials away from the battery.

To jump start your car, follow these directions closely:

1. Open the hood and check the physical condition of the battery (see page 185). In very cold weather, check the condition of the electrolyte. If it seems slushy or like ice, do not try jump starting until it thaws.

NOTICE

If a battery sits in extreme cold, the electrolyte inside can freeze. Attempting to jump start with a frozen battery can cause it to rupture.

2. Turn off all the electrical accessories: heater, A/C, stereo system, lights, etc.
   Put the transmission in Neutral or Park, and set the parking brake.

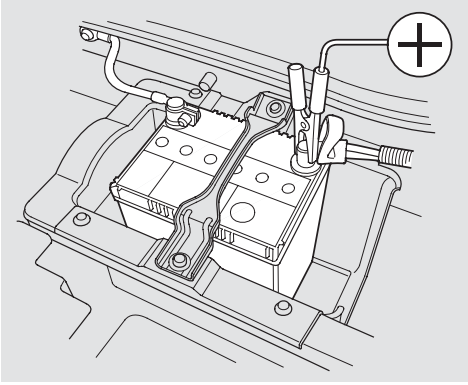

3. Connect one jumper cable to the positive (+) terminal on your Honda's battery. Connect the other end to the positive (+) terminal on the booster battery.

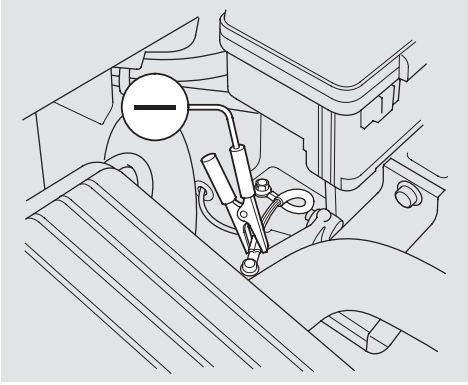

4. Connect the second jumper cable to the negative (−) terminal on the booster battery. Connect the other end to the grounding strap as shown. Do not connect this jumper cable to any other part of the engine.

5. If the booster battery is in another vehicle, have an assistant start that vehicle and run it at a fast idle.

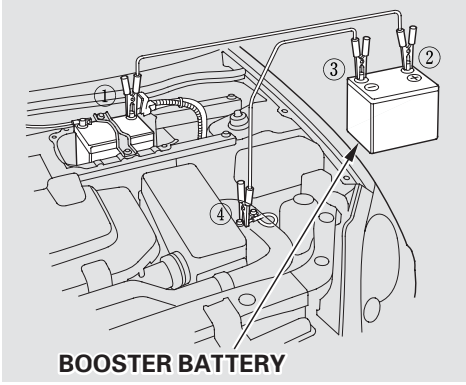

6. Start your car. If the starter motor still operates slowly, check the jumper cable connections to make sure they have good metal-to-metal contact.

7. Once your car is running, disconnect the negative cable from your car, then from the booster battery. Disconnect the positive cable from your car, then the booster battery.

Keep the ends of the jumper cables away from each other and any metal on the car until all are disconnected. Otherwise, you may cause an electrical short.

The pointer of your car's temperature gauge should stay in the mid-range under most conditions. It may go higher if you are driving up a long steep hill on a very hot day. If it climbs to the red mark, you should determine the reason.

NOTICE

Driving with the temperature gauge pointer at the red mark can cause serious damage to your engine.

Your car can overheat for several reasons, such as lack of coolant or a mechanical problem. The only indication may be the temperature gauge climbing to or above the red mark. Or you may see steam or spray coming from under the hood. In either case, you should take immediate action.

⚠ WARNING

Steam and spray from an overheated engine can seriously scald you.

Do not open the hood if steam is coming out.

1. Safely pull to the side of the road. Put the transmission in Neutral or Park, and set the parking brake. Turn off the heating and cooling system and all other accessories. Turn on the hazard warning indicators.

2. If you see steam and/or spray coming from under the hood, turn off the engine.

3. If you do not see steam or spray, leave the engine running and watch the temperature gauge. If the high heat is due to overloading (climbing a long, steep hill on a hot day with the A/C running, for example), the engine should start to cool down almost immediately. If it does, wait until the temperature gauge comes down to the mid-point then continue driving.

4. If the temperature gauge stays at the red mark, turn off the engine.

5. Wait until you see no more signs of steam or spray, then open the hood.

6. Look for any obvious coolant leaks, such as a split radiator hose. Everything is still extremely hot, so use caution. If you find a leak, it must be repaired before you continue driving (see **Emergency Towing** on page 239).

7. If you don't find an obvious leak, check the coolant level in the radiator reserve tank (see page 125). If the level is below the MIN mark, add coolant to halfway between the MIN and MAX marks.

8. If there was no coolant in the reserve tank, you may also have to add coolant to the radiator. Let the engine cool down until the pointer reaches the middle of the temperature gauge, or lower, before checking the radiator.

⚠ WARNING

Removing the radiator cap while the engine is hot can cause the coolant to spray out, seriously scalding you.

Always let the engine and radiator cool down before removing the radiator cap.

9. Using gloves or a large heavy cloth, turn the radiator cap counterclockwise, without pushing down, to the first stop. This releases any remaining pressure in the cooling system. After the pressure releases, push down on the cap and turn it until it comes off.

10. Start the engine and set the temperature control dial to maximum. Add coolant to the radiator up to the base of the filler neck. If you do not have the proper coolant mixture available, you can add plain water. Remember to have the cooling system drained and refilled with the proper mixture as soon as you can.

11. Put the radiator cap back on tightly. Run the engine and watch the temperature gauge. If it goes back to the red mark, the engine needs repair. (See **Emergency Towing** on page 239 .)

12. If the temperature stays normal, check the coolant level in the radiator reserve tank. If it has gone down, add coolant to the MAX mark. Put the cap back on tightly.

Low Oil Pressure Indicator

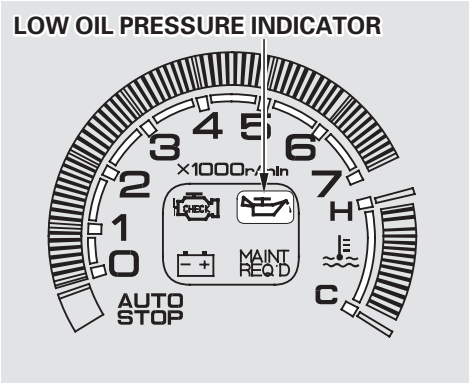

This indicator should light when the ignition switch is ON (II), and go out after the engine starts. It should never come on when the engine is running. If it starts flashing, it indicates that the oil pressure dropped very low for a moment, then recovered. If the indicator stays on with the engine running, it shows that the engine has lost oil pressure and serious engine damage is possible. In either case, you should take immediate action.

NOTICE

Running the engine with low oil pressure can cause serious mechanical damage almost immediately. Turn off the engine as soon as you can safely get the car stopped.

1. Safely pull off the road and shut off the engine. Turn on the hazard warning indicators.

2. Let the car sit for a minute. Open the hood and check the oil level (see page 124). Although oil level and oil pressure are not directly connected, an engine that is very low on oil can lose pressure during cornering and other driving maneuvers.

3. If necessary, add oil to bring the level back to the full mark on the dipstick (see page 167).

4. Start the engine and watch the oil pressure indicator. If the light does not go out within ten seconds, turn off the engine. There is a mechanical problem that needs to be repaired before you can continue driving. (See **Emergency Towing** on page 239 .)

   The engine running generates the oil pressure.
   When the auto idle stop is activated, the engine is stopped. But the low oil pressure indicator does not light.

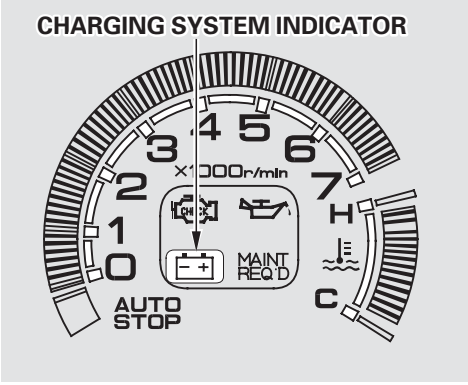

This indicator should come on when the ignition switch is ON (II), and go out after the engine starts. If it comes on brightly when the engine is running, it indicates that the charging system has stopped charging the battery.

Immediately turn off all electrical accessories: A/C, rear defogger, etc. Try not to use other electrically-operated controls such as the radio. Keep the engine running and take extra care not to stall it. Starting the engine will discharge the battery rapidly.

By eliminating as much of the electrical load as possible, you can drive several miles (kilometers) before the battery is too discharged to keep the engine running. Drive to a service station or garage where you can get technical assistance.

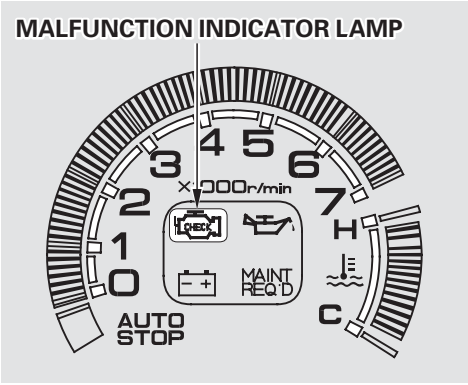

This indicator comes on for a few seconds when you turn the ignition switch ON (II). If it comes on at any other time, it indicates one of the engine's emissions control systems may have a problem. Even though you may feel no difference in your car's performance, it can reduce your fuel economy and cause your car to put out excessive emissions. Continued operation may cause serious damage.

If you have recently refueled your car, the cause of this indicator coming on could be a loose or missing fuel fill cap. Check the cap and tighten it until it clicks several times. Replace the fuel fill cap if it is missing. Tightening the cap will not make the indicator turn off immediately; it takes one driving trip.

If the indicator remains on past one driving trip, or the fuel cap was not loose or missing, have the car checked by the dealer as soon as possible. Drive moderately until the dealer has inspected the problem. Avoid full-throttle acceleration and driving at high speed.

You should also have the dealer inspect your car if this indicator comes on repeatedly, even though it may turn off as you continue driving.

NOTICE

If you keep driving with the malfunction indicator lamp on, you can damage your car's emissions controls and engine. Those repairs may not be covered by your car's warranties.

CONTINUED

Readiness Codes
Your car has certain “readiness codes” that are part of the on-board diagnostics for the emissions systems. In some states, part of the emissions testing is to make sure these codes are set. If they are not set, the test cannot be completed.

If your car’s battery has been disconnected or gone dead, these codes are erased. It takes several days of driving under various conditions to set the codes again.

If possible, do not take your car for a state emissions test until the readiness codes are set. To check if they are set, turn the ignition ON (II), but do not start the engine. The Malfunction Indicator Lamp will come on for 20 seconds. If it then goes off, the readiness codes are set. If it blinks 5 times, the readiness codes are not set. Refer to the warranty manual for more information.

Brake System Indicator

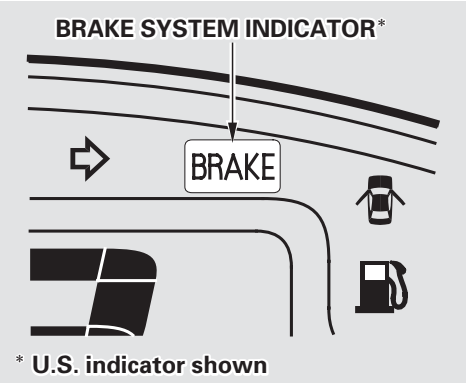

The Brake System Indicator is a reminder to check the parking brake. It comes on and stays lit if you do not fully release the parking brake.

If it comes on at any other time, it indicates a problem with the car's brake system. In most cases, the problem is a low fluid level in the brake fluid reservoir. Press lightly on the brake pedal to see if it feels normal. If it does, check the brake fluid level the next time you stop at a service station (see page 181). If the fluid level is low, take the car to your dealer and have the brake system inspected for leaks or worn brake pads.

However, if the brake pedal does not feel normal, you should take immediate action. Because of the brake system's dual-circuit design, a problem in one part of the system will still give you braking at two wheels. You will feel the brake pedal go down much farther before the car begins to slow down, and you will have to press harder on the pedal. The distance needed to stop will be much longer.

Slow down by shifting to a lower gear, and pull to the side of the road when it is safe. Because of the longer distance needed to stop, it is hazardous to drive the car. You should have it towed, and repaired as soon as possible. (See **Emergency Towing** on page 239 .)

If you must drive the car a short distance in this condition, drive slowly and cautiously.

All the electrical circuits in your car have fuses to protect them from a short circuit or overload. These fuses are located in two fuse boxes.

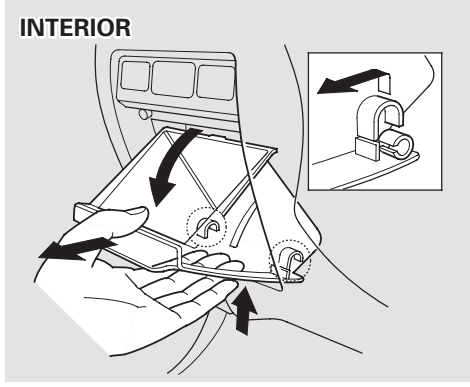

The interior fuse is underneath the dashboard on the driver's side. Remove the storage pocket by swinging the lid down, pushing up, and pulling it straight out of its hinges.

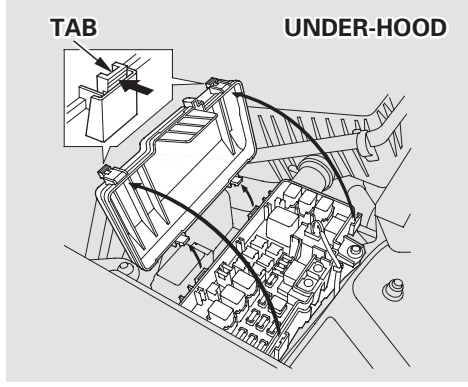

The under-hood fuse box is located in the engine compartment. To open it, push the tab as shown.

Checking and Replacing Fuses

If something electrical in your car stops working, the first thing you should check for is a blown fuse. Determine from the chart on pages 235 and 236 , or the diagram on the fuse box lid, which fuse or fuses control that component. Check those fuses first, but check all the fuses before deciding that a blown fuse is not the cause. Replace any blown fuses and check the component's operation.

1. Turn the ignition switch to LOCK (0). Make sure the headlights and all other accessories are off.

2. Remove the cover from the fuse box.

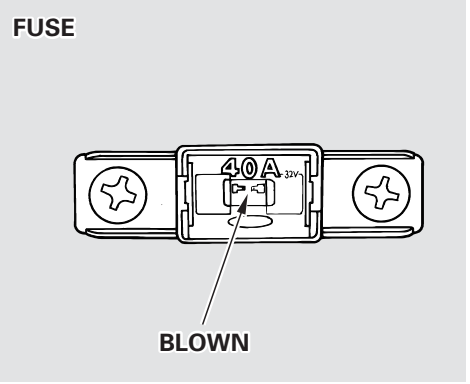

3. Check each of the large fuses in the under-hood fuse box by looking through the top at the wire inside. Removing these fuses requires a Phillips-head screw-driver.

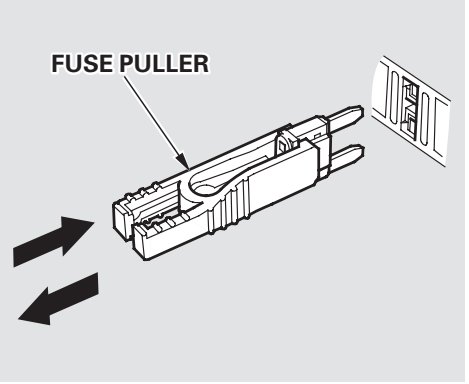

4. Check the smaller fuses in the under-hood fuse box and all the fuses in the interior fuse boxes by pulling out each fuse with the fuse puller provided in the under-hood fuse box.

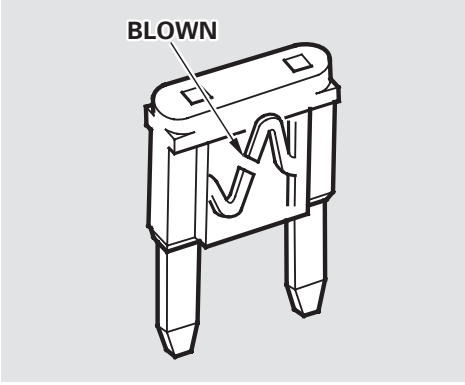

5. Look for a burned wire inside the fuse. If it is burned, replace it with one of the spare fuses of the same rating or lower.

If you cannot drive the car without fixing the problem, and you do not have a spare fuse, take a fuse of the same rating or a lower rating from one of the other circuits. Make sure you can do without that circuit temporarily (such as the accessory power socket or radio).

If you replace the blown fuse with a spare fuse that has a lower rating, it might blow out again. This does not indicate anything wrong. Replace the fuse with one of the correct rating as soon as you can.

NOTICE

Replacing a fuse with one that has a higher rating greatly increases the chances of damaging the electrical system. If you do not have a replacement fuse with the proper rating for the circuit, install one with a lower rating.

6. If the replacement fuse of the same rating blows in a short time, there is probably a serious electrical problem in your car. Leave the blown fuse in that circuit and have your car checked by a qualified mechanic.

INTERIOR FUSE BOX

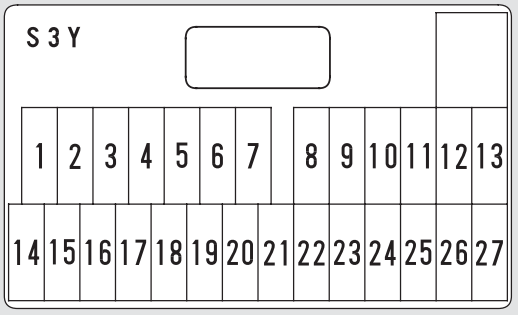

No.	Amps.	Circuits Protected
1	10 A	SRS
2	15 A	Fuel Pump, SRS
3	20 A	Front Wiper
4	7.5 A	FI-ECU
5	7.5 A	Turn Light
6	7.5 A	Meter
7	15 A	IG Coil
8	20 A	Power Window, Passenger
9	7.5 A	Starter Signal
10	20 A	Power Window, Driver

No.	Amps.	Circuits Protected
11	7.5 A	ACC Radio
12	10 A	ACC Socket
13	—	Not used
14	—	Not used
15	10 A	Small Light
16	7.5 A	Air Conditioning, R/C Mirror
17	7.5 A	Daytime Running Light*
18	7.5 A	Back Up Light
19	7.5 A	Interior Light
20	10 A	Radio
21	10 A	Daytime Running Light*
22	20 A	Door Lock
23	7.5 A	Tailgate Lock
24	7.5 A	IMA
25	—	Not used
26	10 A	Rear Wiper
27	7.5 A	Back Light

* : Canadian model only

UNDER-HOOD FUSE BOX

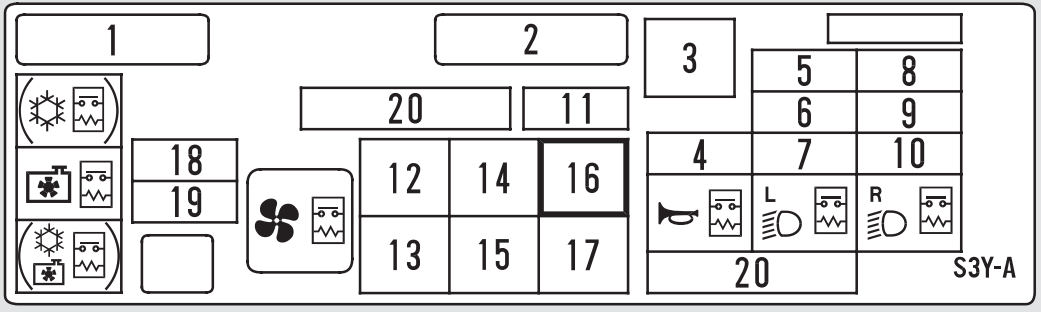

No.	Amps.	Circuits Protected
1	50 A	IG1 Main
2	80 A	Battery
3	30 A	ABS Motor
4	10 A	Hazard
5	15 A	IMA
6	10 A	Horn Stop
7	15 A	Fuel Pump
8	15 A	Left Headlight
9	—	Not used
10	15 A	Right Headlight

No.	Amps.	Circuits Protected
11	30 A	Cooling Fan
12	40 A	Heater Motor
13	30 A	Rear Defroster
14	20 A	ABS F/S
15	40 A	Power Steering
16	30 A	Back Up, ACC
17	40 A	Power Window
18	7.5 A	IMA ECU
19	20 A	Condenser Fan
20	—	Spare Fuse

If Your Car Gets Stuck

If your car gets stuck in sand, mud, or snow, call a towing service to pull it out (see page 239).

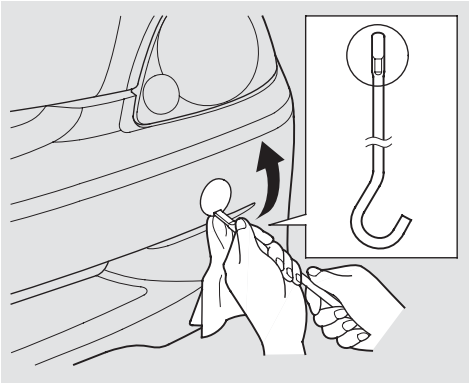

For very short distances, such as freeing the car, you can use the detachable towing hook that mounts on the anchor in the front bumper.

To use the towing hook:

1. Remove the cover from the bumper.

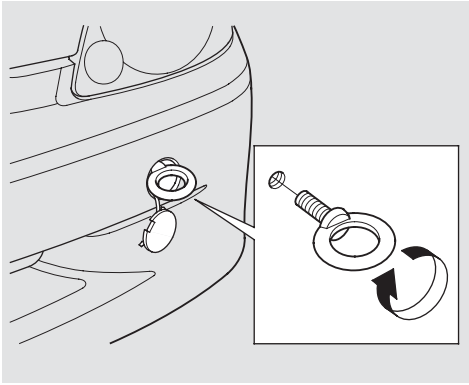

2. Remove the towing hook and wheel wrench from the tool box.

3. Screw the towing hook into the hole and tighten it securely by hand.

If your car needs to be towed, call a professional towing service or, if you belong to one, an organization that provides roadside assistance. Never tow your car behind another vehicle with just a rope or chain. It is very dangerous.

There are three popular types of professional towing equipment.

Flat-bed Equipment — The operator loads your car on the back of a truck. **This is the best way to transport your Honda.**

Wheel-lift Equipment — The tow truck uses two pivoting arms that go under the tires (front or rear) and lift them off the ground. The other two tires remain on the ground. **This is an acceptable way to tow your Honda.**

Sling-type Equipment — The tow truck uses metal cables with hooks on the ends. These hooks go around parts of the frame or suspension and the cables lift that end of the car off the ground. Your car's suspension and body can be seriously damaged. **This method of towing is unacceptable.**

If your Honda cannot be transported by flat-bed, it should be towed by wheel-lift equipment with the front wheels off the ground. If due to damage, your car must be towed with the front wheels on the ground, do the following:

5-speed Manual Transmission
- Release the parking brake.
- Shift the transmission to Neutral.

Automatic Transmission
- Release the parking brake.
- Start the engine.
- Shift to D, then to N.
- Turn off the engine.

NOTICE

Improper towing preparation will damage the transmission. Follow the above procedure exactly. If you cannot shift the transmission, your car must be transported with the front wheels off the ground.

With the front wheels on the ground, it is best to tow the car no farther than 50 miles (80 km), and keep the speed below 35 mph (55 km/h).

If your car is equipped with a front spoiler, remove it before towing so it is not damaged.

CONTINUED

If you decide to tow your car with all four wheels on the ground, make sure you use a properly-designed and attached tow bar. Prepare the car for towing as described above, and leave the ignition switch in Accessory (I) so the steering wheel does not lock. Make sure the radio and any items plugged into the accessory power socket are turned off so they do not run down the battery.

NOTICE

The steering system can be damaged if the steering wheel is locked. Leave the ignition switch in Accessory (I), and make sure the steering wheel turns freely before you begin towing.

NOTICE

Trying to lift or tow your car by the bumpers will cause serious damage. The bumpers are not designed to support the car's weight.

The diagrams in this section give you the dimensions and capacities of your Honda, and the locations of the identification numbers. It also includes information you should know about your vehicle's tires and emissions control systems.

Identification Numbers 242
Specifications 244
DOT Tire Quality Grading (U.S. Vehicles) 246
Uniform Tire Quality Grading 246
Treadwear 246
Traction..... 246
Temperature 247
Oxygenated Fuels..... 248
Driving in Foreign Countries 249
Emissions Controls..... 250
The Clean Air Act..... 250
Crankcase Emissions Control System..... 250
Evaporative Emissions Control System..... 250
Onboard Refueling Vapor Recovery 250
Exhaust Emissions Controls 251
PGM-FI System 251
Ignition Timing Control System..... 251
Three Way Catalytic Converter..... 251
Replacement Parts..... 251
Three Way Catalytic Converter... 252
State Emissions Testing 253

Identification Numbers

Your car has several identifying numbers located in various places.

The Vehicle Identification Number (VIN) is the 17-digit number your Honda dealer uses to register your car for warranty purposes. It is also necessary for licensing and insuring your car. The easiest place to find the VIN is on a plate fastened to the top of the dashboard. You can see it by looking through the windshield on the driver's side. It is also on the Certification label attached to the driver's doorjamb, and is stamped on the engine compartment bulkhead. The VIN is also provided in bar code on the Certification label.

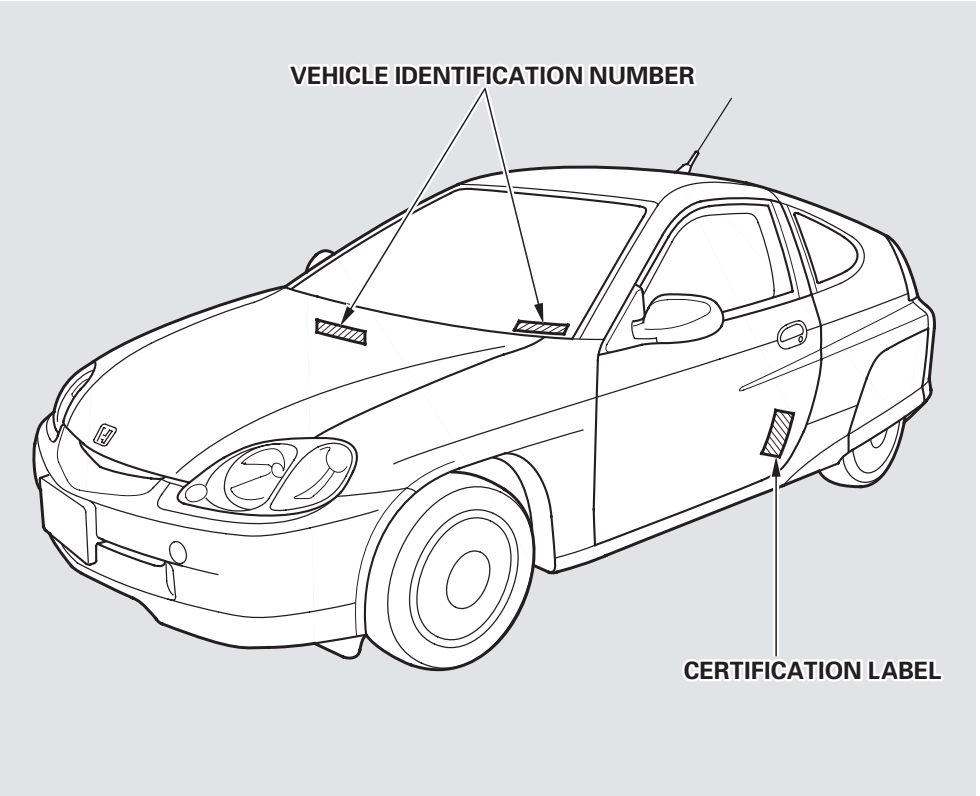

The Engine Number is stamped into the engine block.

The Transmission Number is on a label on top of the transmission.

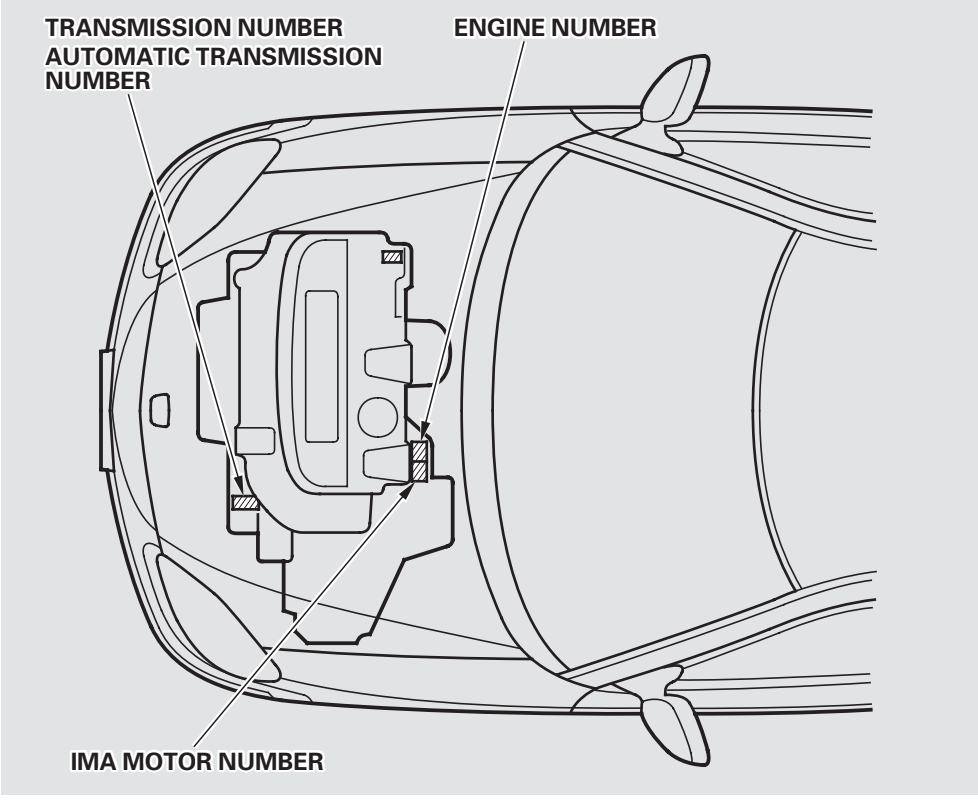

Specifications

Dimensions

Length		155.0 in (3,938 mm)
Width		66.7 in (1,695 mm)
Height		53.3 in (1,355 mm)
Wheelbase		94.5 in (2,400 mm)
Track	Front	56.5 in (1,435 mm)
	Rear	52.2 in (1,325 mm)

Weights

Gross vehicle weight rating	See the certification label attached to the driver's doorjamb.

Engine

Type		Water cooled 4-stroke SOHC 3-cylinder gasoline engine
Bore x Stroke		2.8 x 3.21 in (72 x 81.5 mm)
Displacement		60.8 cu-in (995 cm^3)
Compression ratio	MT	10.8 : 1
	CVT	10.3 : 1
Spark plugs*2		ILZFR5A-11

*2 : Contact your Honda dealer when replacement is necessary.

Capacities

Fuel tank		Approx. 10.6 US gal (40 ℓ , 8.8 Imp gal)
Engine coolant	Change*1	0.61 US gal (2.3 ℓ , 0.51 Imp gal)
	Total	1.06 US gal (4.0 ℓ , 0.88 Imp gal)
Engine oil	Change	
	Including filter	2.6 US qt (2.5 ℓ , 2.2 Imp qt)
	Without filter	2.4 US qt (2.3 ℓ , 2.0 Imp qt)
	Total	3.2 US qt (3.0 ℓ , 2.6 Imp qt)
Manual transmission fluid	Change	1.6 US qt (1.5 ℓ , 1.3 Imp qt)
	Total	1.7 US qt (1.6 ℓ , 1.4 Imp qt)
Automatic transmission fluid (CVT)*2	Change	3.5 US qt (3.3 ℓ , 2.9 Imp qt)
	Total	5.8 US qt (5.5 ℓ , 4.8 Imp qt)
Windshield washer reservoir		4.8 US qt (4.5 ℓ , 4.0 Imp qt)

*1 : Including the coolant in the reserve tank and that remaining in the engine.
Reserve tank capacity: 0.11 US gal (0.4 ℓ , 0.09 Imp gal)
*2 : U.S. model

Air Conditioning

Refrigerant type	HFC-134a (R-134a)
Charge quantity	17.6—19.4 oz (500—550 g)
Lubricant type	SP-10

Lights

Headlights (HI/LO)	12 V — 60/55 W (HB2)
Front turn signal	12 V — 21 W
Front parking light	12 V — 5 W
Side marker light	12 V — 5 W
Rear turn signal lights	12 V — 21 W
Stop/Taillights	12 V — 21/5 W
Back-up lights	12 V — 18 W
Trunk light	12 V — 3.4 W
License plate lights	12 V — 5 W
Interior light	12 V — 5 W

Battery

Capacity	MT	12 V — 27 Ah/5 HR
	CVT*	12 V — 30 Ah/5 HR

Fuses

Interior	See page 235 or the fuse label attached to the inside of the fuse box door under the dashboard.
Under-hood	See page 236 or the fuse box cover.

* U.S. model

Alignment

Toe-in	Front	0.00 in (0.0 mm)
	Rear	0.12 in (3.0 mm)
Camber	Front	0°
	Rear	—1°
Caster	Front	2°

Tires

Size	Front/Rear	P165/65R14 78S
	Spare	T115/70D14 88M
Pressure	Front	38 psi (260 kPa)
	Rear	35 psi (240 kPa)
	Spare	60 psi (420 kPa)

DOT Tire Quality Grading (U.S. Vehicles)

The tires on your car meet all U.S. Federal Safety Requirements. All tires are also graded for treadwear, traction, and temperature performance according to Department of Transportation (DOT) standards. The following explains these gradings.

Uniform Tire Quality Grading
Quality grades can be found where applicable on the tire sidewall between the tread shoulder and the maximum section width. For example:

Treadwear 200
Traction AA
Temperature A

DOT Quality Grades
All passenger car tires must conform to Federal Safety Requirements in addition to these grades.

Treadwear
The treadwear grade is a comparative rating based on the wear rate of the tire when tested under controlled conditions on a specified government test course. For example, a tire graded 150 would wear one and one-half (1 1/2) times as well on the government course as a tire graded 100. The relative performance of tires depends upon the actual conditions of their use, however, and may depart significantly from the norm due to variations in driving habits, service practices and differences in road characteristics and climate.

Traction — AA, A, B, C
The traction grades, from highest to lowest, are AA, A, B, and C. Those grades represent the tire's ability to stop on wet pavement as measured under controlled conditions on specified government test surfaces of asphalt and concrete. A tire marked C may have poor traction performance.

Warning: The traction grade assigned to this tire is based on straight-ahead braking traction tests, and does not include acceleration, cornering, hydroplaning, or peak traction characteristics.

Temperature – A, B, C
The temperature grades are A (the highest), B, and C, representing the tire's resistance to the generation of heat and its ability to dissipate heat when tested under controlled conditions on a specified indoor laboratory test wheel. Sustained high temperature can cause the material of the tire to degenerate and reduce tire life, and excessive temperature can lead to sudden tire failure. The grade C corresponds to a level of performance which all passenger car tires must meet under the Federal Motor Vehicle Safety Standard No. 109. Grades B and A represent higher levels of performance on the laboratory test wheel than the minimum required by law.

Warning: The temperature grade for this tire is established for a tire that is properly inflated and not overloaded. Excessive speed, underinflation, or excessive loading, either separately or in combination, can cause heat buildup and possible tire failure.

Oxygenated Fuels

Some conventional gasolines are being blended with alcohol or an ether compound. These gasolines are collectively referred to as oxygenated fuels. To meet clean air standards, some areas of the United States and Canada use oxygenated fuels to help reduce emissions.

If you use an oxygenated fuel, be sure it is unleaded and meets the minimum octane rating requirement.

Before using an oxygenated fuel, try to confirm the fuel's contents. Some states/provinces require this information to be posted on the pump.

The following are the U.S. EPA and Canadian CGSB approved percentages of oxygenates:

ETHANOL (ethyl or grain alcohol)
You may use gasoline containing up to 10 percent ethanol by volume. Gasoline containing ethanol may be marketed under the name "Gasohol."

MTBE (Methyl Tertiary Butyl Ether)
You may use gasoline containing up to 15 percent MTBE by volume.

METHANOL (methyl or wood alcohol)
Your vehicle was not designed to use fuel that contains methanol. Methanol can corrode metal parts in the fuel system, and also damage plastic and rubber components. This damage would not be covered by your warranties.

If you notice any undesirable operating symptoms, try another service station or switch to another brand of gasoline.

Fuel system damage or performance problems resulting from the use of an oxygenated fuel containing more than the percentages of oxygenates given above are not covered under warranty.

If you are planning to take your Honda outside the U.S. or Canada, contact the tourist bureaus in the areas you will be traveling in to find out about the availability of unleaded gasoline with the proper octane rating.

If unleaded gasoline is not available, be aware that using leaded gasoline in your Honda will affect performance and fuel mileage, and damage its emissions controls. It will no longer comply with U.S. and Canadian emissions regulations, and will be illegal to operate in North America. To bring your car back into compliance will require the replacement of several components, such as the oxygen sensors and the three way catalytic converter. These replacements are not covered under warranty.

Emissions Controls

The burning of gasoline in your car's engine produces several byproducts. Some of these are carbon monoxide (CO), oxides of nitrogen (NOx) and hydrocarbons (HC). Gasoline evaporating from the tank also produces hydrocarbons. Controlling the production of NOx, CO, and HC is important to the environment. Under certain conditions of sunlight and climate, NOx and HC react to form photochemical "smog." Carbon monoxide does not contribute to smog creation, but it is a poisonous gas.

The Clean Air Act
The United States Clean Air Act* sets standards for automobile emissions. It also requires that automobile manufacturers explain to owners how their emissions controls work and what to do to maintain them. This section summarizes how the emissions controls work. Scheduled maintenance is on page 158 .

* In Canada, Honda vehicles comply with the Canadian Motor Vehicle Safety Standards (CMVSS) for Emissions valid at the time they are manufactured.

Crankcase Emissions Control System
Your car has a Positive Crankcase Ventilation System. This keeps gasses that build up in the engine's crankcase from going into the atmosphere. The Positive Crankcase Ventilation valve routes them from the crankcase back to the intake manifold. They are then drawn into the engine and burned.

Evaporative Emissions Control System
As gasoline evaporates in the fuel tank, an evaporative emissions control canister filled with charcoal adsorbs the vapor. It is stored in this canister while the engine is off. After the engine is started and warmed up, the vapor is drawn into the engine and burned during driving.

Onboard Refueling Vapor Recovery
The Onboard Refueling Vapor Recovery (ORVR) system captures the fuel vapors during refueling. The vapors are adsorbed in a canister filled with activated carbon. While driving, the fuel vapors are drawn into the engine and burned off.

Exhaust Emissions Controls

The exhaust emissions controls include three systems: PGM-FI, Ignition Timing Control and Three Way Catalytic Converter. These three systems work together to control the engine's combustion and minimize the amount of HC, CO, and NOx that comes out the tailpipe. The exhaust emissions control systems are separate from the crankcase and evaporative emissions control systems.

PGM-FI System

The PGM-FI System uses sequential multiport fuel injection.
It has three subsystems: Air Intake, Engine Control, and Fuel Control. The Engine Control Module (ECM) or the Powertrain Control Module (PCM) uses various sensors to determine how much air is going into the engine. It then controls how much fuel to inject under all operating conditions.

Ignition Timing Control System

This system constantly adjusts the ignition timing, reducing the amount of HC, CO and NOx produced.

Three Way Catalytic Converter

The three way catalytic converter is in the exhaust system. Through chemical reactions, it converts HC, CO, and NOx in the engine's exhaust to carbon dioxide (CO_2), dinitrogen (N_2), and water vapor.

Replacement Parts

The emissions control systems are designed and certified to work together in reducing emissions to levels that comply with the Clean Air Act. To make sure the emissions remain low, you should use only new Genuine Honda replacement parts or their equivalent for repairs. Using lower quality parts may increase the emissions from your car.

The emissions control systems are covered by warranties separate from the rest of your car. Read your warranty manual for more information.

Three Way Catalytic Converter

The three way catalytic converter contains precious metals that serve as catalysts, promoting chemical reactions to convert the exhaust gasses without affecting the metals. The catalytic converter is referred to as a three-way catalyst, since it acts on HC, CO, and NOx. A replacement unit must be an original Honda part or its equivalent.

The three way catalytic converter must operate at a high temperature for the chemical reactions to take place. It can set on fire any combustible materials that come near it. Park your car away from high grass, dry leaves, or other flammables.

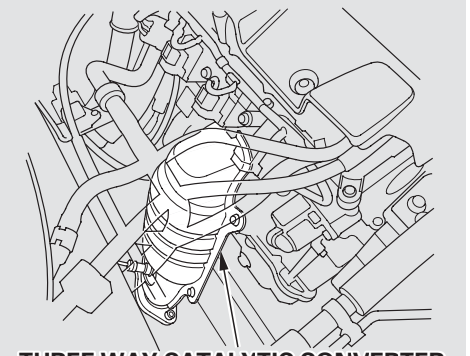

THREE WAY CATALYTIC CONVERTER

A defective three way catalytic converter contributes to air pollution, and can impair your engine's performance. Follow these guidelines to protect your car's three way catalytic converter.

- Always use unleaded gasoline. Even a small amount of leaded gasoline can contaminate the catalyst metals, making the three way catalytic converter ineffective.
- Keep the engine tuned-up.
- Have your car diagnosed and repaired if it is misfiring, backfiring, stalling, or otherwise not running properly.

Testing of Readiness Codes
If you take your vehicle for a state emissions test shortly after the battery has been disconnected or gone dead, it may not pass the test. This is because of certain "readiness codes" that must be set in the on-board diagnostics for the emissions systems. These codes are erased when the battery is disconnected, and set again only after several days of driving under a variety of conditions.

If the testing facility determines that the readiness codes are not set, you will be requested to return at a later date to complete the test. If you must get the vehicle re-tested within the next two or three days, you can condition the vehicle for re-testing by doing the following.

- Make sure the gas tank is nearly, but not completely, full (around 3/4).
- Make sure the vehicle has been parked with the engine off for 8 hours or more.
- Make sure the ambient temperature is between 20° and 95°F.
- Without touching the accelerator pedal, start the engine and let it idle for 20 seconds.
- Keep the vehicle in Park (automatic transmission) or Neutral (manual transmission). Increase the engine speed to 2,000 rpm and hold it there until the temperature gauge rises to at least 1/4 of the scale (approximately 3 minutes).

CONTINUED

- Select a nearby lightly traveled major highway where you can maintain a speed of 50 to 60 mph (80 to 97 km/h) for at least 20 minutes. Drive on the highway in D (A/T) or 5th (M/T). When traffic allows, drive for 90 seconds without moving the accelerator pedal. (Vehicle speed may vary slightly; this is okay.) If you cannot do this for a continuous 90 seconds because of traffic conditions, drive for at least 30 seconds, then repeat it two more times (for a total of 90 seconds).
- Then drive in city/suburban traffic for at least 10 minutes. When traffic conditions allow, let the vehicle coast for several seconds without using the accelerator pedal or the brake pedal.

If the testing facility determines the readiness codes are still not set, see your Honda dealer.

Warranty and Customer Relations

Customer Relations Information 256
Warranty Coverages 257
Reporting Safety Defects (U.S. Vehicles) 258
Authorized Manuals 259

Customer Relations Information

Honda dealership personnel are trained professionals. They should be able to answer all your questions. If you encounter a problem that your dealership does not solve to your satisfaction, please discuss it with the dealership's management. The Service Manager or General Manager can help. Almost all problems are solved in this way.

If you are dissatisfied with the decision made by the dealership's management, contact your Honda Customer Relations Office.

U.S. Owners:

American Honda Motor Co.
Automobile Customer Relations Department
1919 Torrance Boulevard
Torrance, California 90501-2746

(800) 999-1009

Canadian Owners:

CUSTOMER RELATIONS
RELATIONS AVEC LA CLIENTÈLE
Honda Canada Inc.
715 Milner Avenue
Toronto, ON
M1B 2K8

Tel: 1-888-9-HONDA-9

Fax: Toll-free 1-877-939-0909
Toronto (416) 287-4776

In Puerto Rico and the U.S. Virgin Islands:

Bella International
P.O. Box 190816
San Juan, Puerto Rico 00919-0816

(787) 250-4318

When you call or write, please give us this information:

- Vehicle Identification Number (see page 242)
- Name and address of the dealer who services your car
- Date of purchase
- Mileage on your car
- Your name, address, and telephone number
- A detailed description of the problem
- Name of the dealer who sold the car to you

U.S. Owners
Your new Honda is covered by these warranties:

New Car Limited Warranty — covers your new vehicle, except for the battery, emissions control systems and accessories, against defects in materials and workmanship.

Emissions Control Systems Defects Warranty and Emissions Performance Warranty — these two warranties cover your vehicle's emissions control systems. Time, mileage, and coverage are conditional. Please read the warranty manual for exact information.

Original Equipment Battery Limited Warranty — this warranty gives up to 100 percent credit toward a replacement battery.

Seat Belt Limited Warranty — a seat belt that fails to function properly is covered for the useful life of the vehicle.

Rust Perforation Limited Warranty — all exterior body panels are covered for rust-through from the inside for the specified time period with no mileage limit.

Accessory Limited Warranty — Genuine Honda Accessories are covered under this warranty. Time and mileage limits depend on the type of accessory and other factors. Please read your warranty manual for details.

Replacement Parts Limited Warranty — covers all genuine Honda replacement parts against defects in materials and workmanship.

Replacement Battery Limited Warranty — provides prorated coverage for a replacement battery purchased from a Honda dealer.

Replacement Muffler Lifetime Limited Warranty — provides coverage for as long as the purchaser of the muffler owns the car.

Restrictions and exclusions apply to all these warranties. Please read the 2001 Honda Warranty Information booklet that came with your car for precise information on warranty coverages. Your Honda's original tires are covered by their manufacturer. Tire warranty information is in a separate booklet.

Canadian Owners
Please refer to the 2001 Warranty Manual that came with your car.

Reporting Safety Defects (U.S. Vehicles)

If you believe that your vehicle has a defect which could cause a crash or could cause injury or death, you should immediately inform the National Highway Traffic Safety Administration (NHTSA) in addition to notifying American Honda Motor Co., Inc.

If NHTSA receives similar complaints, it may open an investigation, and if it finds that a safety defect exists in a group of vehicles, it may order a recall and remedy campaign. However, NHTSA cannot become involved in individual problems between you, your dealer, or American Honda Motor Co., Inc.

To contact NHTSA, you may either call the Auto Safety Hotline toll-free at 1-800-424-9393 (or 366-0123 in Washington D.C. area) or write to: NHTSA, U.S. Department of Transportation, Washington, D.C. 20590. You can also obtain other information about motor vehicle safety from the Hotline.

Purchasing Factory Authorized Manuals (U.S. only)

The following publications covering the operation and servicing of your vehicle can be obtained from Helm Incorporated, either by filling out the attached form or, for credit card holders, calling the toll-free phone number on the form. For manuals prior to the year shown below, contact Helm Incorporated, P.O. Box 07280, Detroit, Michigan 48207, or call 1-800-782-4356.

Publication Form Number	Form Description	Price Each*
61S3Y00	2000 Honda Insight Service Manual	$65.00
61S3Y02	2001 Honda Insight Service Manual Supplement	$36.00
61S3Y01EL	2001 Honda Insight Electrical Troubleshooting Manual	$46.00
61S3Y30	2000-2001 Honda Insight Body Repair Manual	$40.00
31S3Y611	2001 Honda Insight Owner's Manual	$32.00
HON-R	Order Form for Previous Years- Indicate Year and Model Desired	FREE

* Prices are subject to change without notice and without incurring obligation.

Valid only for sales within the U.S. Canadian owners should contact their authorized Honda dealer.

ORDER TOLL FREE: 1-800-782-4356

(NOTE: For Credit Card Holder Orders Only)

Monday-Friday 8:00 A.M. – 6:00 P.M. EST

MINIMUM CREDIT CARD PURCHASE $10.00

OR

By completing this form you can order the materials desired. You can pay by check or money order, or charge to your credit card. Mail to Helm Incorporated at the address shown on the back of the order form.

2001 HON	PUBLICATION NUMBER	VEHICLE MODEL		Qty	Price Each*	Total Price
		Name	Year			

* Prices are subject to change without notice and without incurring obligation.

Orders are mailed within 10 days. Please allow adequate time for delivery.

TOTAL MATERIAL	
Mich. Purchases Add 6% Sales Tax	
HANDLING CHARGE	$6.00
GRAND TOTAL	

SHIP TO

NOTE: Dealers and Companies please provide dealer or company name, and also the name of the person to whose attention the shipment should be sent. For purchases outside U.S.A. please write to the address shown below for a quotation.

Customer Name _____ Attention _____

Street Address — No P.O. Box Number _____ Apartment Number _____

City _____ State & Zip Code _____

Daytime Telephone Number ( ) _____

PAYMENT

☐ Check or money order enclosed payable to Helm Inc — U.S. funds only. Do not send cash

☐ Master Card ☐ VISA ☐ Check here if your billing address is different from the shipping address shown above.

Account Number Expiration: Mo. Yr.

☐☐☐☐ ☐☐☐☐ ☐☐☐☐ ☐☐☐☐ –

CUSTOMER SIGNATURE _____ DATE _____

These Publications cannot be returned for credit without receiving advance authorization within 14 days of delivery. On returns, a restocking fee may be applied against the original order.

HELM P.O. BOX 07280·DETROIT, MICHIGAN 48207·1-800-782-4356

Service Manual:
This manual covers maintenance and recommended procedures for repair to engine and chassis components. It is written for the Journeyman mechanic, but is simple enough for most mechanically-inclined owners to understand.

Electrical Troubleshooting Manual:
This manual complements the Service Manual by providing in-depth troubleshooting information for each electrical circuit in your vehicle.

Body Repair Manual:
This manual describes the procedures involved in the replacement of damaged body parts.

A

Accessories and Modifications 128
Accessories 128
Additional Safety Precaution 129
Modifications 129
ACCESSORY (Ignition Key Position) 70
Accessory Power Socket 80
Additives, Engine Oil 168
Airbag (SRS) 9, 47
Air Conditioning System 90
Maintenance 190
Usage 90
Air Outlets (Vents) 90
Air Pressure, Tires 192
Normal Driving 192
Alcohol in Gasoline 248
Antifreeze 171
Anti-theft Steering Column Lock 69
Appearance Care 207
Audio System 98
Auto Idle Stop 137, 145
Automatic Transmission 140
Capacity, Fluid 244
Checking Fluid Level 178
Shifting 140
Shift Lever Position Indicator .. 140
Shift Lever Positions 140
Shift Lock Release 144

B

Battery
Charging System Indicator 56, 229
Jump Starting 225
Maintenance 185
Specifications 245
Before Driving 119
Belts, Seat 8
Beverage Holder 80
Body Repairs 213
Brakes
Break-in, New Linings 120
Fluid 181
Bulb Replacement 203
Parking 79
System Indicator 46, 231
Wear Indicators 148
Braking System 149
Break-in, New Car 120
Brightness Control, Instruments ... 62
Brights, Headlights 61
Bulb Replacement
Back-up Lights 203
Brake Light 203
Front Parking Lights 201
Front Side Marker Lights 201
Headlights 200
Interior Light 205
License Plate Lights 204
Specifications 245
Turn Signal Lights 201
Bulbs, Halogen 200

C

Capacities Chart 244
Carbon Monoxide Hazard 40
Carrying Cargo 130
Cassette Player
Care 118
Operation 104
CAUTION, Explanation of ii

CONTINUED

CD Changer 114
CD Player 108
Certification Label 242
Chains 197
Charge/Assist Gauge 57
Changing Oil
  How to 169
  When to 158
Changing a Flat Tire 195
Changing Engine Coolant 173
Charging System Indicator 56
Checklist, Before Driving 119
Child Safety 19
Child Seats
  Tether Anchorage Points 33
Cleaner Element, Air 183
Cleaning
  Exterior 208
  Interior 211
  Seat Belts 211
  Vinyl 211
  Windows 212
Clock, Setting the 103
Clutch Fluid 181
CO in the Exhaust 250
Cold Weather, Starting in 135
Compact Spare 216
Consumer Information* 256
Controls, Instruments and 60
Coolant
  Adding 171
  Checking 124
  Proper Solution 175
  Replacing 177
  Temperature Gauge 58
Corrosion Protection 212
Crankcase Emissions Control
  System 250
Current Fuel Mileage 55
Customer Relations Office 256

D

DANGER, Explanation of ii
Dashboard 2, 44
Daytime Running Lights 62
Defects, Reporting Safety 260
Defog and Defrost 84
Defogger, Rear Window 65
Defrosting the Windows 84
Dimensions 244
Dimming the Headlights 61
Dipstick
  Engine Oil 124
Directional Signals 63
Disc Brake Wear Indicators 148
Disposal of Used Oil 170
Display Change Button 50
Doors
  Locking and Unlocking 71
DOT Tire Quality Grading 246
Downshifting, 5-speed Manual
  Transmission 136
Drive Belts 191
Driver and Passenger Safety 5
Driving 133
  Economy 126
  In Bad Weather 151
  In Foreign Countries 249
Dust and Pollen Filter 191

E

Economy, Fuel 126
Emergencies on the Road 215
  Battery, Jump Starting 224
  Brake System Indicator 232
  Changing a Flat Tire 217

Charging System Indicator 229
Checking the Fuses..... 233
Low Oil Pressure Indicator 228
Malfunction Indicator Lamp 230
Overheated Engine 227
Emergency Brake..... 79
Emergency Flashers 65
Emergency Towing 239
Emissions Controls..... 250
Engine
Belts..... 191
Coolant Temperature Gauge 58
Malfunction Indicator Lamp 48, 230
Oil, What Kind to Use..... 167
Overheating..... 227
Specifications 244
Starting..... 135
Engine Speed Limiter 139, 143
Ethanol in Gasoline 248
Evaporative Emissions Controls.. 250
Exhaust Fumes 40
Expectant Mothers, Use of Seat Belts by 17
Exterior, Cleaning the..... 208

F

Fabric, Cleaning..... 211
Fan, Interior..... 84
Features, Comfort and Convenience 83
Filling the Fuel Tank..... 121
Filter
Dust and Pollen..... 191
Oil 167
5-speed Manual Transmission
Checking Fluid Level 180
Shifting the 136
Flashers, Hazard Warning..... 65
Flat Tire, Changing a 217
Fluids
Automatic Transmission (CVT) 178
Brake..... 181
Clutch..... 181
Manual Transmission 180
Windshield Washer..... 177
FM Stereo Radio Reception..... 112
Foreign Countries, Driving in 249
Four-way Flashers 65
Fuel..... 126
Fill Door and Cap..... 121
Gauge 58
Octane Requirement 120
Oxygenated 248
Reserve Indicator..... 58
Tank, Filling the..... 121
Fuses, Checking the..... 233

G

Gas Mileage, Improving..... 126
Gasohol 248
Gasoline 120
Fuel Reserve Indicator..... 48
Gauge 50
Octane Requirement 120
Tank, Filling the..... 121
Gas Station Procedures..... 121

CONTINUED

Gauges
Engine Coolant Temperature 58
Fuel..... 58
Speedometer 50
Tachometer 58
Gearshift Lever Positions
Automatic Transmission (CVT) 140
5-speed Manual Transmission..... 136
Glass Cleaning 212
Glove Box 80

H

Halogen Headlight Bulbs..... 200
Hatch
Opening the..... 71
Open Monitor Light 47
Hazard Warning Flashers..... 65
Headlights
Daytime Running Lights..... 62
High Beam Indicator..... 47
Reminder Beeper..... 61
Replacing Halogen Bulbs 200
Turning on..... 63
Heating..... 84
High Altitude, Starting at..... 135
High-Low Beam Switch 61
Hood Latch 184
Hood, Opening the 122
Horn..... 3
Hydraulic Clutch..... 181
Hydroplaning..... 151

I

Identification Number, Vehicle.... 242
Ignition
Keys..... 67
Switch..... 69
Timing Control System..... 251
Important Safety Precautions 6
Indicators, Instrument Panel..... 45
Infant Seats
Tether Anchorage Points 41
Inflation, Proper Tire 192
Normal Driving 193
Inside Mirror 78
Inspection, Tire 194
Instrument Panel 45
Instrument Panel Brightness 62
Interior Cleaning..... 211
Interior Light..... 82
Introduction..... i

J

Jacking up the Car 217
Jack, Tire 217
Jump Starting 224

K

Keys..... 67

L

Label, Certification 242
Lane Change, Signaling 63
Lap/Shoulder Belt..... 34
Lifetime Fuel Mileage..... 55
Lights
Bulb Replacement 203
Indicator..... 47
Parking..... 46
Turn Signal..... 63

Load Limit 131
LOCK (Ignition Key Position) 69
Locks
  Fuel Fill Door 121
  Hatch 71
Low Coolant Level..... 125
Low Fuel Indicator 58
Lower Gear, Downshifting to a.... 139
Lubricant Specifications Chart 244
Luggage 130

M

Maintenance..... 153
  Owner Maintenance Checks.... 165
  Record 154
  Required Indicator..... 59
  Safety..... 154
  Schedule 156
Malfunction Indicator Lamp .. 48, 230
Manual Transmission..... 136
Manual Transmission Fluid 180
Meters, Gauges..... 50
Methanol in Gasoline 248
Mirrors, Adjusting 78

N

New Vehicle Break-in 120
NOTICE, Explanation of..... ii
Numbers, Identification..... 242

O

Octane Requirement, Gasoline.... 120
Odometer..... 50
Odometer, Trip 51
Oil
  Change, How to 169
  Change, When to 158
  Checking Engine 124
  Selecting Proper Viscosity
    Chart 168
ON (Ignition Key Position) 70
Onboard Refueling Vapor
  Recovery 250
Opening the Hatch 71
Operation in Foreign Countries... 249
Outside Mirrors 78
Overheating, Engine 227
Owner Maintenance Checks..... 165
Oxygenated Fuels..... 248

P

Paint Touch-up..... 210
Panel Brightness Control 62
Parking..... 147
Parking Brake 79
Parking Brake and Brake
  System Indicator..... 46, 232
Parking Over Things that Burn... 252
PGM-FI System..... 251
Polishing and Waxing 210
Pre-Drive Safety Checklist 11
Pregnancy, Using Seat Belts..... 17
Protecting Adults..... 12
  Additional Safety Precautions.... 18
  Advice for Pregnant Women..... 17
Protecting Children 19
  Protecting Larger Children..... 29
  Protecting Small Children 26
  Using Child Seats with
    Tethers..... 33

CONTINUED

R

Radiator Overheating 227
Radio/Cassette Sound System..... 98
Rear Lights, Bulb Replacement... 203
Rear View Mirror..... 79
Rear Window Defogger 65
Rear Window Washer 65
Rear Window Wiper 65
Reclining the Seat Backs 76
Replacement Information
  Air Cleaner Element..... 183
  Engine Coolant..... 173
  Engine Oil and Filter 169
  Fuses 233
  Light Bulbs 203
  Schedule 156
  Drive Belt..... 191
  Tires 195
  Wiper Blades 187
Replacing Seat Belts After a
  Crash 35
Reserve Tank, Engine
  Coolant..... 124, 173
Restraint, Child 19
Rotation, Tire 195

S

Safety Belts..... 8, 34
Safety Defects, Reporting* 259
Safety Features 7
  Airbags 9
  Door Locks 10
  Head Restraints 10
  Seat Belts 8
  Seats & Seat-Backs..... 10
Safety Labels, Location of 41
Safety Messages ii
Seat Belts 8, 34
  Additional Information..... 34
  Cleaning 208
  Lap/Shoulder Belt..... 34
  Maintenance..... 35
  Reminder Light and
    Beeper..... 34, 46
  System Components..... 34
  Use During Pregnancy..... 17
  Wearing a Lap/Shoulder Belt.... 15
Seats, Adjusting the..... 76
Serial Number 242
Service Intervals 156
Service Manual* 259
Service Station Procedures 121
Setting the Clock 103
Shift Lever Position Indicator 140
Shift Lock Release..... 144
Signaling Turns..... 63
Snow Tires..... 197
Solvent-type Cleaners..... 209
Sound System..... 98
Spare Tire
  Inflating..... 216
  Specifications 245
Specifications Charts..... 244
Speedometer 50
SRS, Additional Information..... 36
  Additional Safety Precautions.... 39
  How the SRS Indicator
    Works..... 38
  How Your Airbags Work 36
  SRS Components 36
  SRS Service..... 39
SRS Indicator..... 34, 46
START (Ignition Key Position) 70
Starting the Engine..... 135
  In Cold Weather at High
    Altitude 135
  With a Dead Battery 224

Steam Coming from Engine 227
Steering Wheel
Anti-theft Column Lock 69
Stereo Sound System 98
Storing Your Car 200
Supplemental Restraint
System 9, 36
Servicing 39
SRS Indicator 34, 46
System Components 36
Synthetic Oil 168

T

Tachometer 58
Taillights, Changing Bulbs in 203
Taking Care of the
Unexpected 215
Tape Player 104
Technical Descriptions
DOT Tire Quality Grading 246
Emissions Control Systems 250
Oxygenated Fuels 248
Three Way Catalytic
Converter 252
Temperature Gauge 58
Tether Anchorage Points 33
Three Way Catalytic Converter ... 252
Time, Setting the 103
Tire Chains 197
Tire, How to Change a Flat 195
Tires 192
Air Pressure 193
Checking Wear 194
Compact Spare 216
DOT Tire Quality Grading 246
Inflation 192
Inspection 194
Replacing 195
Rotating 195
Snow 197
Specifications 244
Tire Chains 197
Tools, Tire Changing 217
Towing
A Trailer 152
Emergency Wrecker 238
Transmission
Checking Fluid Level,
Automatic (CVT) 178
Checking Fluid Level,
Manual 180
Fluid Selection 180
Identification Number 243
Shifting the Manual 136
Treadwear 246
Trip Meters 53
Trip Mileage 54
Turn Signals 63

U

Underside, Cleaning 208
Unexpected, Taking Care
of the 215
Uniform Tire Quality Grading 246
Unleaded Gasoline 120
Upholstery Cleaning 211
Used Oil, How to Dispose of 170

V

Vehicle Capacity Load 131
Vehicle Dimensions 244
Vehicle Identification Number 242
Vehicle Storage 206

CONTINUED

VIN 242
Vinyl Cleaning 211
Viscosity, Oil..... 168

W

WARNING, Explanation of ii
Warning Labels, Location of 41
Warranty Coverages* 257
Washer, Windshield
  Operation 64
Washing 209
Waxing and Polishing 210
Wheels
  Alignment and Balance 194
  Compact Spare 216
  Wrench 219
Windows
  Cleaning 212
  Rear, Defogger 65
Windshield
  Cleaning 63
  Defroster 95
  Washers 64
Wipers, Windshield
  Changing Blades..... 187
  Operation 65
Worn Tires 194
Wrecker, Emergency Towing..... 239

* U.S. and Canada only

Service Information Summary

Gasoline:
Unleaded gasoline, pump octane number of 87 or higher.

Fuel Tank Capacity:
10.6 US gal (40 ℓ , 8.8 Imp gal)

Recommended Engine Oil:
API Service SJ ''Energy Conserving'' oil, SAE 0W-20 viscosity (see page 167).

Oil change capacity (including filter):
2.6 US qt (2.5 ℓ , 2.2 Imp qt)

Automatic Transmission Fluid:
Use Honda ATF-Z1 (Automatic Transmission Fluid) only.

5-speed Manual Transmission Fluid:
Honda Manual Transmission Fluid preferred, or an API service SG, SH or SJ, SAE 10W-30 or 10W-40 motor oil as a temporary replacement (see page 180).

Capacity (including differential):
1.6 US qt (1.5 ℓ , 1.3 Imp qt)

Brake Fluid:
Honda Heavy Duty Brake Fluid DOT 3 preferred, or a DOT 3 or DOT 4 brake fluid as a temporary replacement (see page 181).

Tire Pressure (measured cold):
Front:
38 psi (260 kPa)
Rear:
35 psi (240 kPa)

Spare Tire:
60 psi (420 kPa)