Alfa Romeo GT/V/6 (116)

table of contents

GT/V/6 (116) 5
BODY 5
FRONT LID 5
SCREENS/SEALS 6
LIGHTNING 7
GAS SPRING 8
REPAIR PANELS 9
BUMPER/GRILLE/PANEL 10
ENGINE 11
FUEL MANAGEMENT 11
INTAKE MANIFOLD 4-CYL. 11
CONTROL UNIT AND VALVE 12
intake area GTV6 13
HOSES GTV6 14
V-BELTS 15
FUEL SYSTEM 16
FUEL PUMP GTV/4 16
FUEL PUMP GTV/6 17
ENGINE GASKETS 18
GASKETS ENGINE GTV/4 18
GASKETS ENGINE GTV/6 19
HEAD GASKET SET GTV/4 20
HEAD SET GTV/6 21
FULL SET GTV/4 22
FULL SET GTV/6 23
COOLING SYSTEM 24
RADIATOR GTV/4 24
RADIATOR GTV/6 25
THERMOSTAT GTV/4 26
THERMOSTAT GTV/6 27
WATERPUMP GTV/4 28
WATERPUMP GTV/6 29
HOSES GTV/4 30
HOSES GTV/6 31
ENGINE MOUNT 32
ENGINE MOUNT GTV/4 32
ENGINEMOUNT GTV/6 33
VALVE GEAR 34
CAMSHAFT GT/V/4 34
CAMSHAFT GTV/6 35
TIMING CHAIN GTV/4 36
VALVE MECHANISM GTV/4 37
VALVE MECHANISM GTV/6 38
TIMING BELT GTV/6 39
FILTER 40
FILTER 40
EXHAUST SYSTEM 41

GTV/4 ... 41
GTV/4 Sport ... 42
GTV/6 ... 43
GTV/6 Sport ... 44
CABLES ... 45
CABLES ... 45
DRIVETRAIN ... 46
DRIVESHAFT ... 46
DRIVESHAFT GTV/4 ... 46
DRIVESHAFT GTV/6 ... 47
SIDE SHAFT GTV/4 ... 48
SIDE SHAFT GTV/6 ... 49
GEARBOX ... 50
DIFFERENTIAL ... 50
GEARBOX MECHANIK ... 51
GEAR MOUNT GT/V/4 ... 52
GEAR MOUNT 1.6/1.8/2.0 ... 53
GEAR MOUNT GTV/6 ... 54
CLUTCH ... 55
CLUTCH SET GTV/4 ... 55
CLUTCH SET GTV/6 ... 56
CLUTCH ACTUATION ... 57
BRAKE ... 58
BRAKE DISCS ... 58
BRAKE PADS FRONT ... 59
BRAKE PADS REAR ... 60
BRAKE PAD ATTACHMENT ... 61
CALIPER ... 62
BRAKE SERVO/BRAKE MASTER CYL. ... 63
BRAKE VALVE ... 64
BRAKE HOSES ... 65
BRAKE CABLE ... 66
SUSPENSION ... 67
SPRINGS ... 67
SHOCK ABSORBER ... 68
ATTACHMENT FRONT ... 69
ATTACHMENT REAR ... 70
FRONT STABILISER ... 71
REAR STABILISER ... 72
WHEEL BEARING GTV/4 ... 73
WHEEL BEARING GTV/6 ... 74
STEERING ... 75
STEERING PARTS ... 75
ELECTRIC ... 76
PUSH/TOGGLE SWITCHES ... 76
FUEL TANK SENDING UNIT ... 77
ENGINE ELECTRIC ... 78
SENSORS/SWITCHES ... 78
DISTRIBUTOR GTV/4 (116) ... 79
DISTRIBUTOR GTV/6 (116) ... 80

IGNITION PARTS GTV/4 (116) 81
IGNITION PARTS GTV/6 (116) 82
AGGREGATS 83
WIPERS 84
WIPERS 84
INTERIOR 85
DASH PANEL 85
Sunroof Tan Vinyl 86
CAR MAT 87
handbrake lever cover 88
gear lever cover 89
LITERATURE 90

GT/V/6 (116) > BODY > FRONT LID

1	FS001	PLASTIC HOLDER FRONT LID	34.99 EUR

GT/V/6 (116) > BODY > SCREENS/SEALS

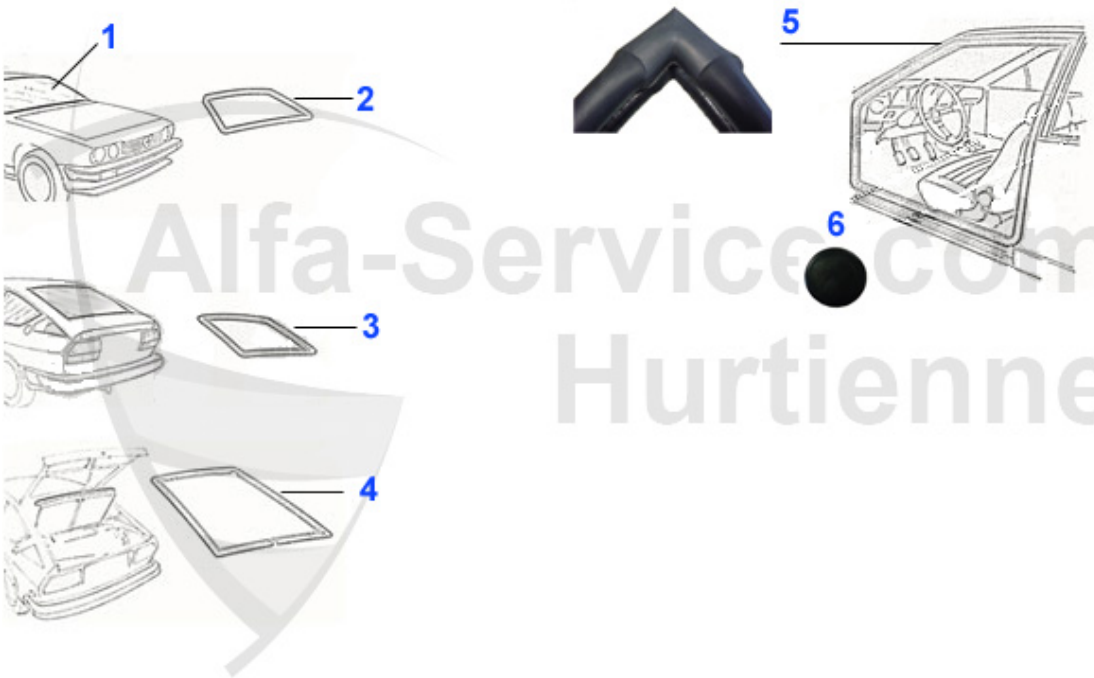

Alfa-Service.com
Hurtienne

1	WSS20191	OE. 60720111 FRONT SCREEN GTV 116 (green glass)	355.00 EUR
2	DG50401	GASKET FRONT WINDSCREEN GT/V(116) 1. SERIES, WITH TRIM	149.00 EUR
2	DG01880	GASKET FRONT WINDSCREEN GTV(116) 2-ND SERIES	149.00 EUR
3	DG0028	OE. 60727640 REAR WINDOW RUBBER GTV (116) 1st Series	149.00 EUR
3	DG0029	REAR WINDOW SEAL GTV (116) 2nd Series wihout TRIM	149.00 EUR
4	DG11920	TRUNK RUBBER SEAL GT/V/6 (116)	50.27 EUR
5	DG28863	OE. 60728863 DOOR RUBBER GT/V/6 (116)	68.00 EUR
6	18 009 0 0	RUBBER PLUG - FLOOR PANEL	4.50 EUR

GT/V/6 (116) > BODY > LIGHTNING

1	SW20816	OUTER HEADLAMP ALFETTA BERLINA 1974> RIGHT ALFETTA COUP• ALL MODELS WITHOUT PARKING LIGHT	70.78 EUR
2	SW21816	OUTER HEADLAMP ALFETTA BERLINA 1974> RIGHT ALFETTA COUP• ALL MODELS LEFT	70.78 EUR
3	SW60816	OUTER HEAD LAMP RIGHT SIDE, 6, GT/V/6 (116),YEAR 81-85 WITH PARKING LIGHT	77.97 EUR
4	SW61816	OUTER HEADLAMP LEFT SIDE, 6, GT/V/6 (116), YEAR 81-85 WITH PARKING LIGHT	77.97 EUR
5	SW22816	HIGH-BEAM HEADLAMP GTV 116 right	70.78 EUR
6	SW23816	OE.60703450 HEAD LAMP ALFETTA BERLINA 1974> RIGHT ALFETTA COUPE LEFT ALL MODELS	70.78 EUR
7	BL11354	Blinkleuchte/Standlicht rechts GT/V /6 (116) 1.Serie (ALTISSIMO)	119.00 EUR
8	BL11355	Blinkleuchte/Standlicht links GT/V/ 6 (116) 1.Serie (CARELLO)	119.00 EUR
9	BL60020	INDICATOR LAMP LEFT GTV6 (116) 2.SERIES	***
10	BL60021	INDICATOR LAMP RIGHT GTV6 (116) 2.SERIES	***
11	BL10161	LEFT FLASHER GLASS ALFETTA, GTV/6 2. SERIES 1980>	22.55 EUR
12	BL10160	RIGHT FLASHER GLASS ALFETTA, GTV/6 2. SERIES 1980>	22.55 EUR
13	16 140 3 0	SCREW INDICATOR LENSE yellow - SPIDER	2.70 EUR
14	ZBL17344	SIDE DIRECTION INDICATOR ALFETTA/GTV (116) >75 WITH CHROME FRAME	29.70 EUR
15	ZBL17346	FRONT FENDER SIDE LAMP ALFETTA/GTV (116) YEAR 75>,SUD SPRINT(901/2)	***
16	16 084 3 0	LICENSE PLATE LIGHT - SPIDER 83-89	31.50 EUR
17	RL0440	LEFT TAIL LAMP GTV6 (116) 1. SERIES	***
18	RL0439	Rückleuchte rechts GT/V(116) 1.Seri e Bj. 75-79	141.61 EUR
19	RL1161	OE. 60728787 TAIL LAMP LENSE L GTV/6 (116) 2nd SERIES	***
20	RL1162	OE. 60728780 TAIL LAMP LENSE R GTV/6 (116) 2nd SERIES	***

GT/V/6 (116) > BODY > GAS SPRING

Gasfeder/Pneumatic Spring GT/V/6 (116)

1	GF2227	REAR HATCH STRUT GT/V (116)	67.54 EUR

GT/V/6 (116) > BODY > REPAIR PANELS

1	RB0042	STIFFENING PANEL GTV/6 (116) FRONT LEFT	51.29 EUR
2	RB0043	STIFFENING PANEL GTV/6 (116) FRONT RIGHT	51.29 EUR
3	RB0044	STIFFENING PANEL GT/V/6 (116) REAR LEFT SIDE	45.01 EUR
4	RB0045	STIFFENING PANEL GT/V/6 (116) REAR RIGHT SIDE	45.01 EUR
5	RB00046	Alfetta Gtv front inner wing repair panel left	100.53 EUR
6	RB00047	Alfetta Gtv front inner wing repair panel right	100.53 EUR
7	RB00073	Versteifung VL f. Radhaus/Stehwand GT/V/6 (116)	64.63 EUR
8	RB00074	Versteifung VR f. Radhaus/Stehwand GT/V/6	64.63 EUR
9	RB03593	rear wheel arch left GT/V(116)	***
10	RB03594	wheel arch rear right GT/V(116)	53.79 EUR
11	RB0050	REPAIR PANEL f. FRONT FENDER RL 116 COUPE	56.80 EUR
12	RB0051	REPAIR PANEL f. FRONT FENDER RR 116 COUPE	56.80 EUR
13	RB0052	REPAIR PANEL f. REAR FENDER FL 116 B-PILLAR 116 COUPE, left side	69.90 EUR
14	RB0053	REPAIR PANEL f. REAR FENDER FR 116 B-PILLAR 116 COUPE, right side	69.90 EUR
15	RB023	INNER SILL ALFETTA GT/V, LEFT	213.38 EUR
16	RB024	INNER SILL ALFETTA GT/V, RIGHT	213.38 EUR
17	RB03013	ROCKER PANEL LEFT SIDE GT/V (116)	44.18 EUR
18	RB03014	ROCKER PANEL RIGHT SIDE GT/V (116)	44.18 EUR
19	RB025	OUTER SILL GT, GTV, GTV/6 LEFT	199.00 EUR
20	RB026	OUTER SILL GT, GTV, GTV/6 RIGHT	199.00 EUR

GT/V/6 (116) > BODY > BUMPER/GRILLE/PANEL

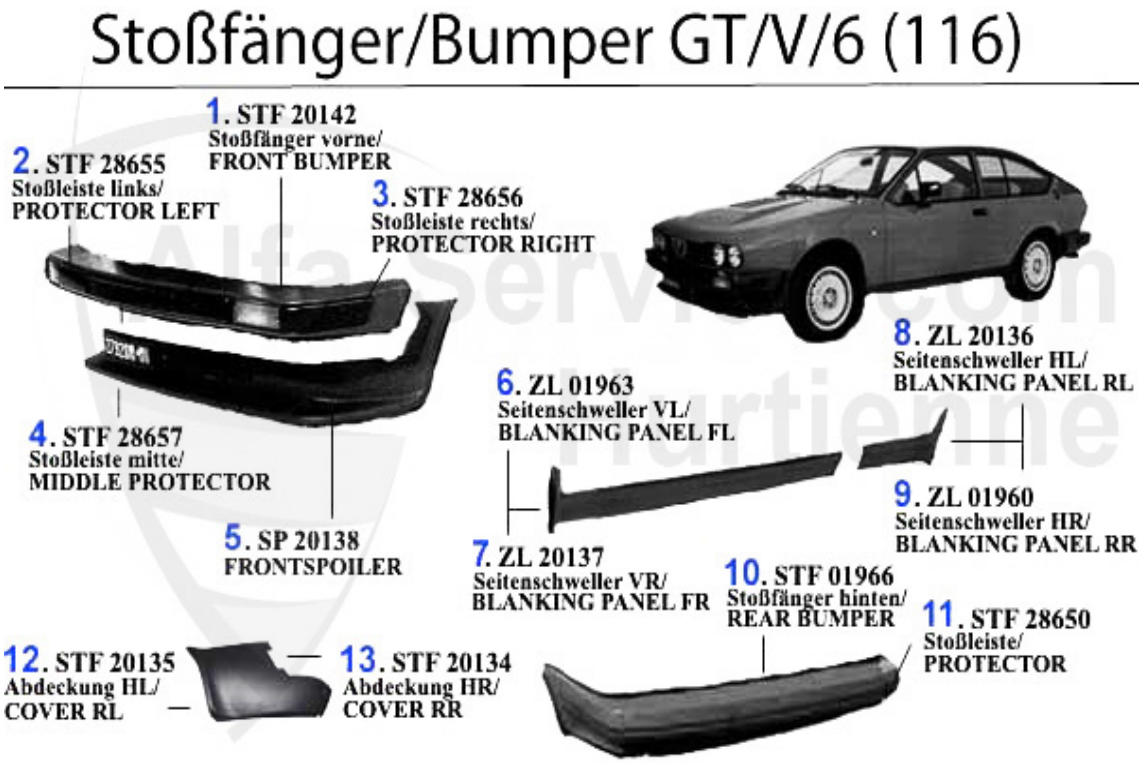

1	STF20142	Stoßfänger vorne GTV/6 (116)	***
2	STF28655	Pralltopf f. Stoßfänger GTV/6 (116) VL	***
3	STF28656	Pralltopf f. Stoßfänger GTV/6 (116) VR	***
4	STF28657	Pralltopf f. Stoßfänger GTV/6 (116) vorne mitte	***
5	SP20138	GTV 6 front spoiler	***
6	ZL01963	cover for sill GTV 6 (116), front left side	101.55 EUR
7	ZL20137	COVER FOR SILL GTV 6 (116), FRONT RIGHT SIDE	101.55 EUR
8	ZL20136	Schwellerabdeckung GTV/6 (116) hint en links	46.16 EUR
9	ZL01960	COVER FOR SILL GTV 6 (116), REAR RIGHT SIDE	46.16 EUR
10	STF01966	REAR BUMPER GTV 6 (116)	***
11	STF28650	Pralltopf f. Stoßfänger GTV/6 (116) hinten mitte	***
12	STF20135	COVER FOR BUMPER GTV 6 (116), REAR LEFT SIDE	40.08 EUR
13	STF20134	Verkleidung f. Stoßfänger GTV/6 (116) HR	40.08 EUR

GT/V/6 (116) > ENGINE > FUEL MANAGEMENT > INTAKE MANIFOLD 4-CYL.

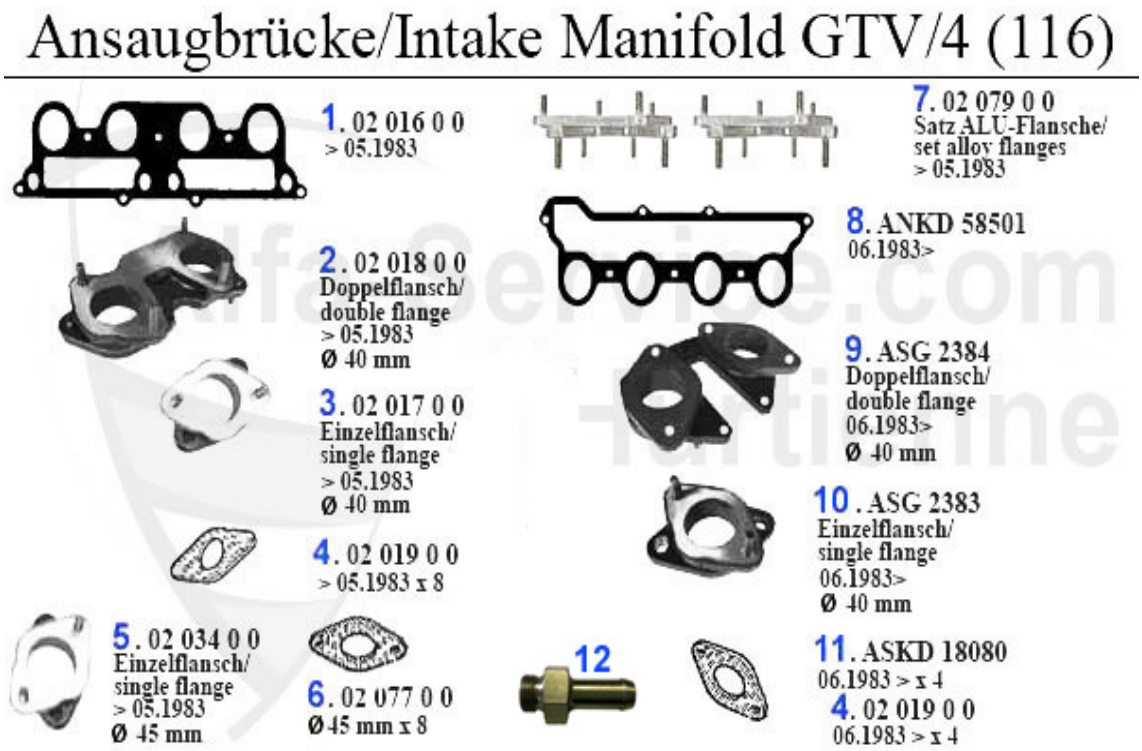

1	02 016 0 0	INTAKE MANIFOLD GASKET CARBURETTOR MODELS 1600-2000	10.50 EUR
2	02 018 0 0	DOUBLE CARBURETOR MOUNT 40mm	***
3	02 017 0 0	SINGLE CARBURETTOR MOUNT 40mm	23.49 EUR
3	02 084 0 0	CARBURATOR MOUNT KIT (4 PCS) ALUMINIUM 40MM TYPE 105,115,116 UNTIL 05.1983	154.00 EUR
4	02 019 0 0	PAPER GASKET CARBURETTOR MOUNT 40mm	0.87 EUR
5	02 034 0 0	CARBURETOR MOUNT 45mm	52.37 EUR
6	02 077 0 0	PAPER GASKET CARBURETTOR MOUNT 45mm	1.95 EUR
7	02 079 0 0	SOLID CARBURETTOR MOUNTS ALUMINIUM 40mm	189.00 EUR
8	ANKD58501	Ansaugbrückendichtung Alfetta/Giuli etta,GT/V (116),Spider'90,75,90 Vergaser Neuer Preis!!	17.15 EUR
9	ASG2384	DOUBLE INTAKE RUBBER 116 4 CYL. 06.83>, Spider 1.6 90-93	***
10	ASG2383	SINGLE INTAKE RUBBER 116 4 CYL. 06.83>, SPIDER 1.6 90-93	32.50 EUR
11	ASKD18080	INFERIOR PAPER GASKET FOR INTAKE RUBBER 116	1.79 EUR
12	08 111 0 0	WATER CONNECTION	9.89 EUR

Einspritzanlage/Injection System RZ/SZ

1. LMS 34953 2. LMM 23386 3. LV 23388

1	LMS34953	OE. 60534953 RIGID SLEEVE 116 6-CYL.	98.00 EUR
2	LMM23386	OE. 60534959 AIR FLOW METER 2.5 V6 75, 90, 6, GTV/6	***
3	LV23388	OE. 60523388 ELECTRO-VALVE 116 6-Cyl.	***

GT/V/6 (116) > ENGINE > FUEL MANAGEMENT > intake area GTV6

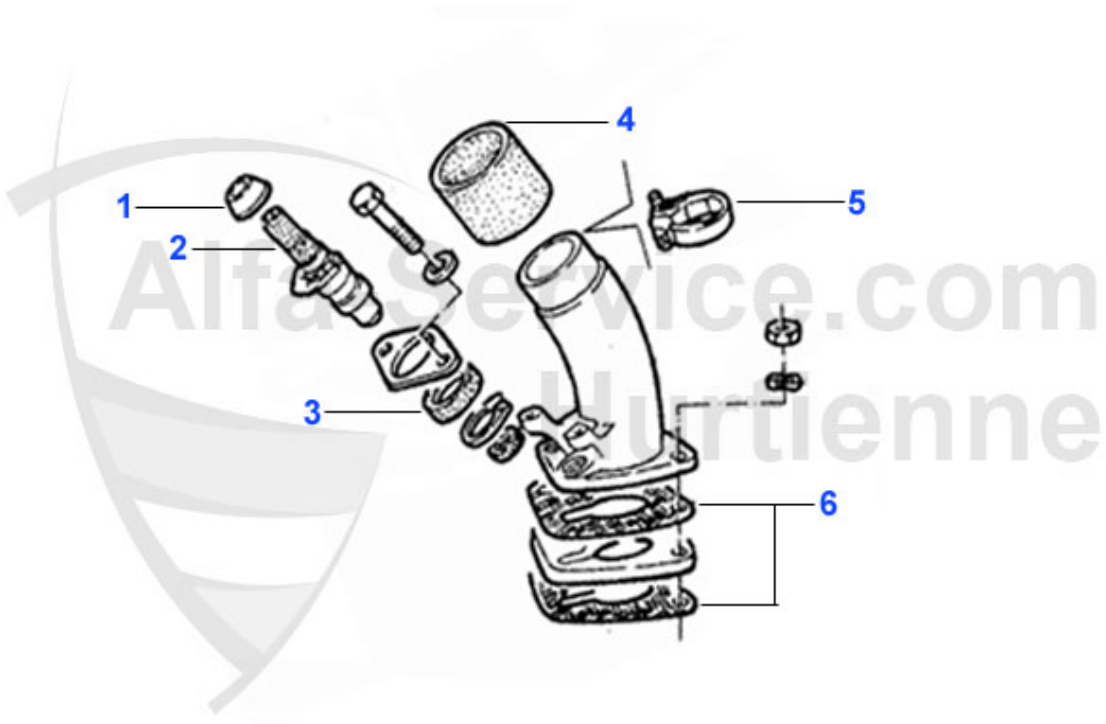

1	TS23405	Tellerscheibe Einspritzdüse GTV/6	1.76 EUR
2	ED23400	OE. 60523400 FUEL INJECTOR 116 V6	***
3	03 183 0 0	SEALING RING injection nozzle	6.79 EUR
4	ASG23379	OE. 60523379 RUBBER HOSE f. INTAKE MANIFOLD 116 6-CYLINDER	15.20 EUR
5	S00790	Schelle Ansauggummi GTV/6 Alfa75	3.92 EUR
6	ASKD20800	Ansaugkrümmerdichtung 75 V6,RZ/SZ	1.98 EUR

GT/V/6 (116) > ENGINE > FUEL MANAGEMENT > HOSES GTV6

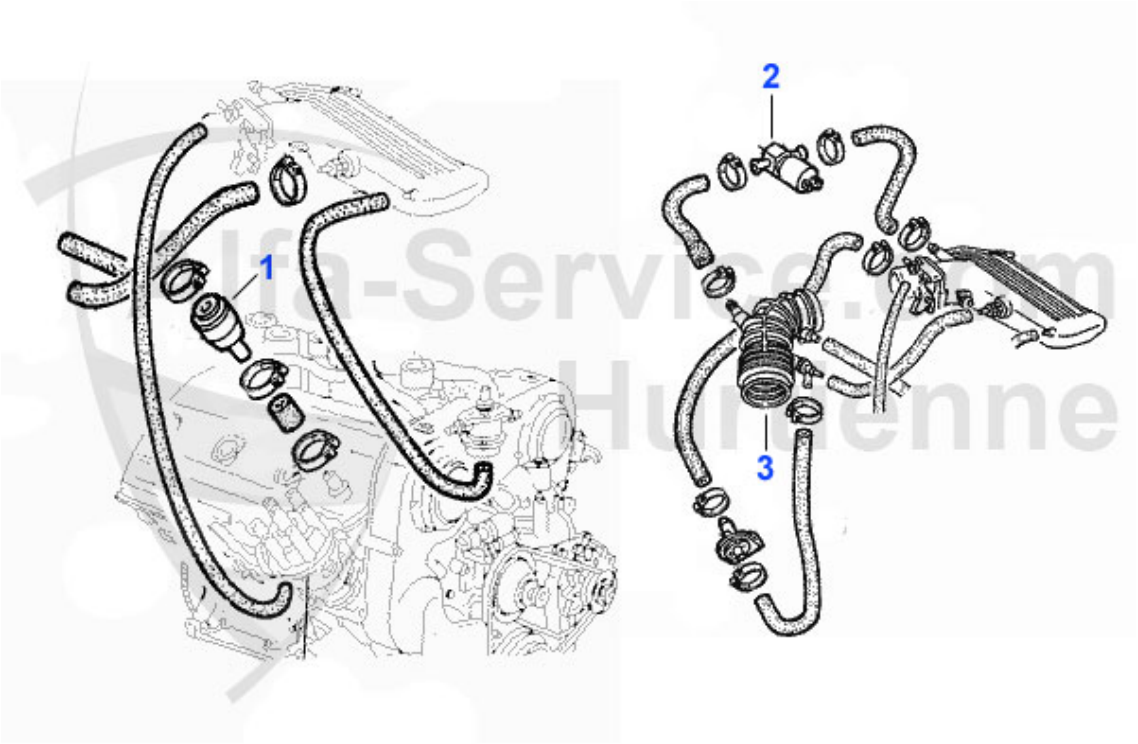

1	ABS21971	Abscheider GTV/6 Alfa 75 6 Zylinder	***
2	LV23388	OE. 60523388 ELECTRO-VALVE 116 6-Cyl.	***
3	LMS34953	OE. 60534953 RIGID SLEEVE 116 6-CYL.	98.00 EUR

Keilriemen/V-Belt GT/V4/6 (116)

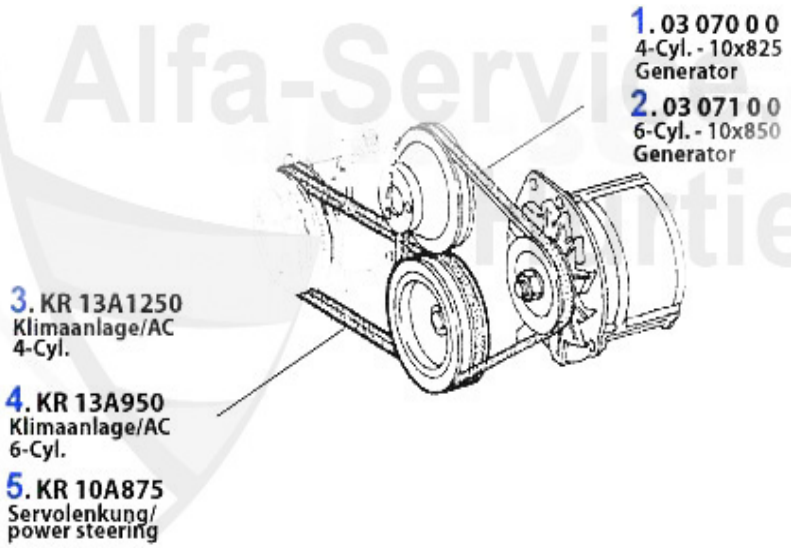

1	03 070 0 0	V-BELT 9.5X825 (SPIDER, GT)	8.70 EUR
2	03 071 0 0	V-BELT 9.5X850	8.70 EUR
3	KR13A1250	V-BELT 12.5X1250 ALFETTA,GIULIETTA,GTV (116) 4 CYL. CLIMACOMPRESSOR	17.39 EUR
4	KR13A950	V-BELT 12.5X950 33 (907),145/6 >11.96 CLIMACOMPRESSOR GTV/6	12.85 EUR
5	KR10A875	V-BELT 10X875 Sud/Sprint,Arna	11.90 EUR

GT/V/6 (116) > ENGINE > FUEL SYSTEM > FUEL PUMP GTV/4

Kraftstoffpumpe/Fuel Pump GTV/4

1. 07 010 0 0
> 1980

2. KP 3046
1980 >

1	07 010 0 0	FUEL PUMP 1300 - 2000 105 carburetor model ALFETTA (76-80)/GIULIETTA 1.3 (80-83) 75 1.6, 1.8, 2.0 (88-89)	35.85 EUR
2	KP3046	FUEL PUMP (116) CARB. 1980>	35.39 EUR

Kraftstoffpumpe/Fuel Pump GTV/6

1	KP46091	FUEL PUMP 33 (907), 75,90, RZ, SZ SPIDER'90, GTV/6, ALL FUEL INJECTED MODELLS, RUBBER-COATED	146.99 EUR

GT/V/6 (116) > ENGINE > ENGINE GASKETS > GASKETS ENGINE GTV/4

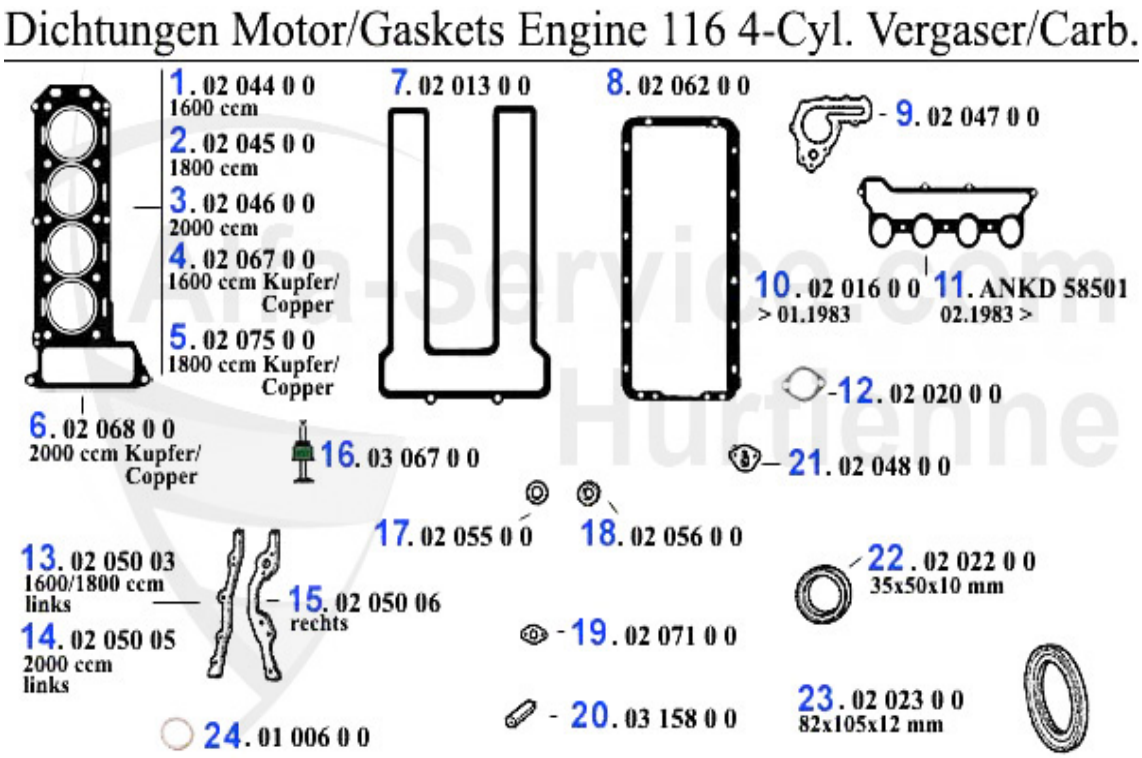

1	02 044 0 0	CYLINDER HEAD GASKET 1600 REINZ	41.50 EUR
2	02 045 0 0	CYLINDER HEAD GASKET 1750 REINZ ALFETTA, GIULIETTA, GTV (116), 75 1800 >1982	44.90 EUR
4	02 046 0 0	CYLINDER HEAD GASKET 2000 REINZ	55.50 EUR
5	02 075 0 0	COPPER CYLINDER HEAD GASKET 1750	***
6	02 068 0 0	COPPER CYLINDER HEAD GASKET 2000	61.55 EUR
7	02 036 0 0	REINZ CAM COVER GASKET GIULIETTA,GTV4, 75,90	25.89 EUR
7	02 013 0 0	CAM COVER GASKET WITH SILICON STRIP 105, ALFETTA, GIULITTA, GTV(116) 75,90 div. 4-cylinders	22.90 EUR
8	02 062 0 0	UPPER OIL PAN GASKET WITH METAL	29.50 EUR
9	02 047 0 0	WATER PUMP GASKET	2.80 EUR
10	02 016 0 0	INTAKE MANIFOLD GASKET CARBURETTOR MODELS 1600-2000	10.50 EUR
11	ANKD58501	Ansaugbrückendichtung Alfetta/Giuli etta,GT/V (116),Spider'90,75,90 Vergaser Neuer Preis!!	17.15 EUR
12	02 020 0 0	GASKET EXHAUST MANIFOLD-CYLINDER HEAD	2.50 EUR
13	02 050 0 3	TIMING COVER GASKET 1600 LEFT MODELS WITH SPIN-ON OIL FILTER	4.40 EUR
14	02 050 0 5	TIMING COVER GASKET 105 2000, LEFT, ALFETTA, GIULIETTA, GTV(116), 75 1600/1800	4.40 EUR
15	02 050 0 6	TIMING COVER GASKET 1300-2000 RIGHT	4.90 EUR
16	03 067 0 0	VALVE SEAL REINFORCED INLET/BLACK	4.80 EUR
17	02 055 0 0	ALUMINIUM WASHER	1.50 EUR
18	02 056 0 0	FIBER WASHER	1.30 EUR
19	02 071 0 0	GASKET TACHOMETER DRIVE	1.84 EUR
20	03 158 0 0	RUBBERBAND 5th MAIN BEARING	3.20 EUR
21	02 048 0 0	FUEL PUMP GASKET	2.18 EUR
22	02 022 0 0	OIL SEAL (35/50/10) CRANKSHAFT FRONT	7.95 EUR
23	02 023 0 0	OIL SEAL (82/105/12) CRANKSHAFT REAR 105 MODELS >1989, ALFETTA, GIULIETTA, 75, 90, GTV (116), MONTREAL	18.30 EUR
24	01 006 0 0	COPPER WASHER SUMP PLUG	1.50 EUR

GT/V/6 (116) > ENGINE > ENGINE GASKETS > GASKETS ENGINE GTV/6

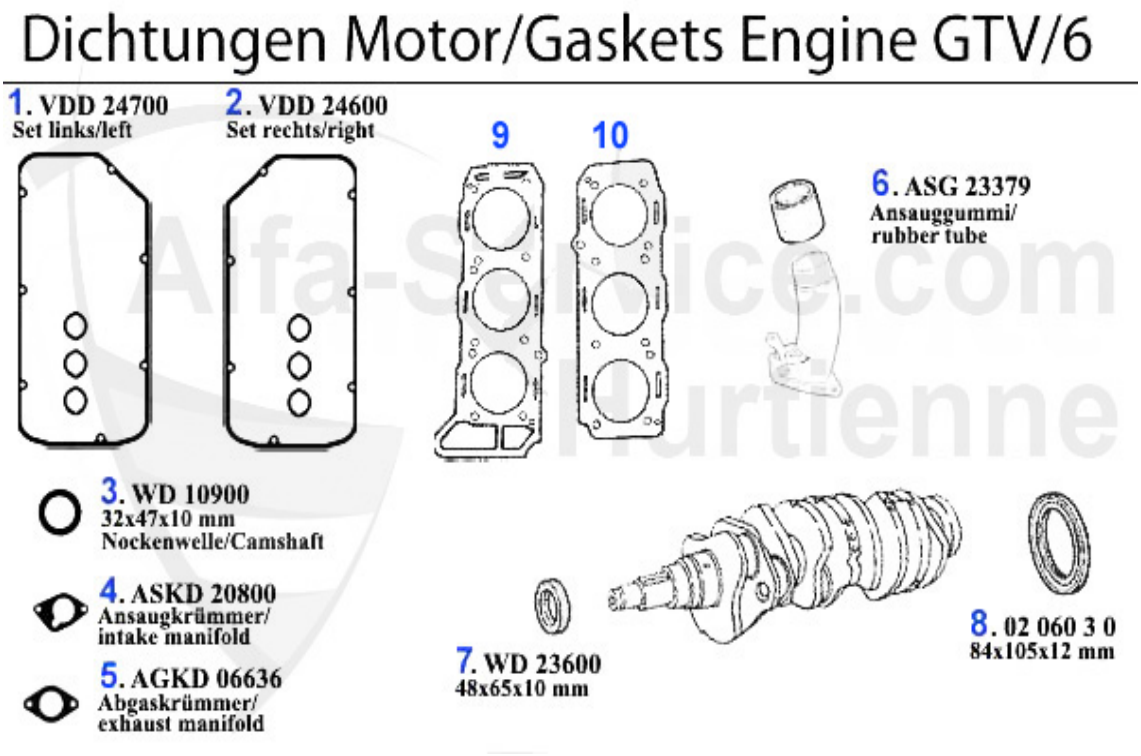

1	VDD24700	CAM COVER GASKET LEFT 6,75,90	33.34 EUR
2	VDD24600	CAM COVER GASKET RIGHT 6,75,90	33.34 EUR
3	WD10900	OIL SEAL 32x47x10 CAMSHAFT GTV 6	16.95 EUR
4	ASKD20800	Ansaugkrümmerdichtung 75 V6,RZ/SZ	1.98 EUR
5	AGKD06636	OE. 60506636 GASKET	2.80 EUR
6	ASG23379	OE. 60523379 RUBBER HOSE f. INTAKE MANIFOLD 116 6-CYLINDER	15.20 EUR
7	WD23600	OE. 60567607 Sealing Gasket	18.85 EUR
8	02 060 3 0	OIL SEAL (84/105/12) CRANKSHAFT REAR Spider 1990-93, 75, 90, 155, 164, GTV 6, 166, 156	24.10 EUR
9	ZKD35770	HEADGASKET RIGHT ALFETTA GTV/6,75V6, 90V6, 2.5 V6	70.66 EUR
10	ZKD35775	HEADGASKET GTV6 LEFT,GTV/6, 75V6, 90V6, 2.5 V6	70.66 EUR

Kopfdichtsatz/Head Set Giulietta (116) Vergaser/Carb.

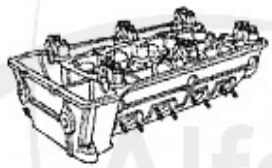

Achtung/Attention:

Dichtsatz ohne Kopfdichtung, bitte separat bestellen!/Headset without HEADGASKET, please order seperate!

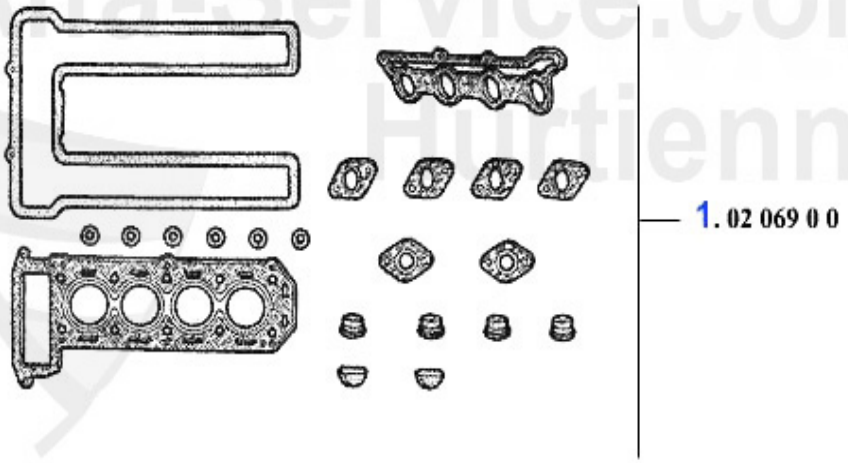

Alfa-Service.com Hurtienne

1	02 069 0 0	HEAD GASKET SET 1300-2000 WITHOUT HEAD GASKET ALL 105/116 CARBURETTOR MODELS	45.01 EUR

Kopfdichtsatz/Headset GTV/6 (116)

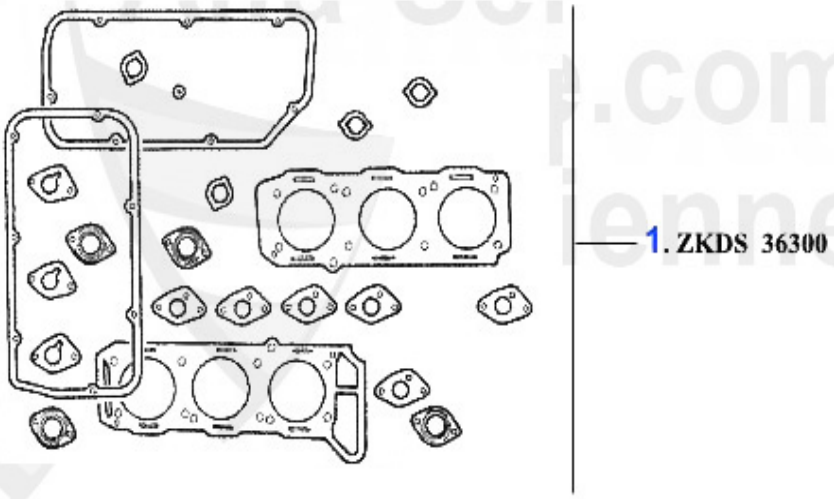

1	ZKDS36300	OE. 60777249 O/H-Set with Head Gasket 6-Cylinder	234.95 EUR

GT/V/6 (116) > ENGINE > ENGINE GASKETS > FULL SET GTV/4

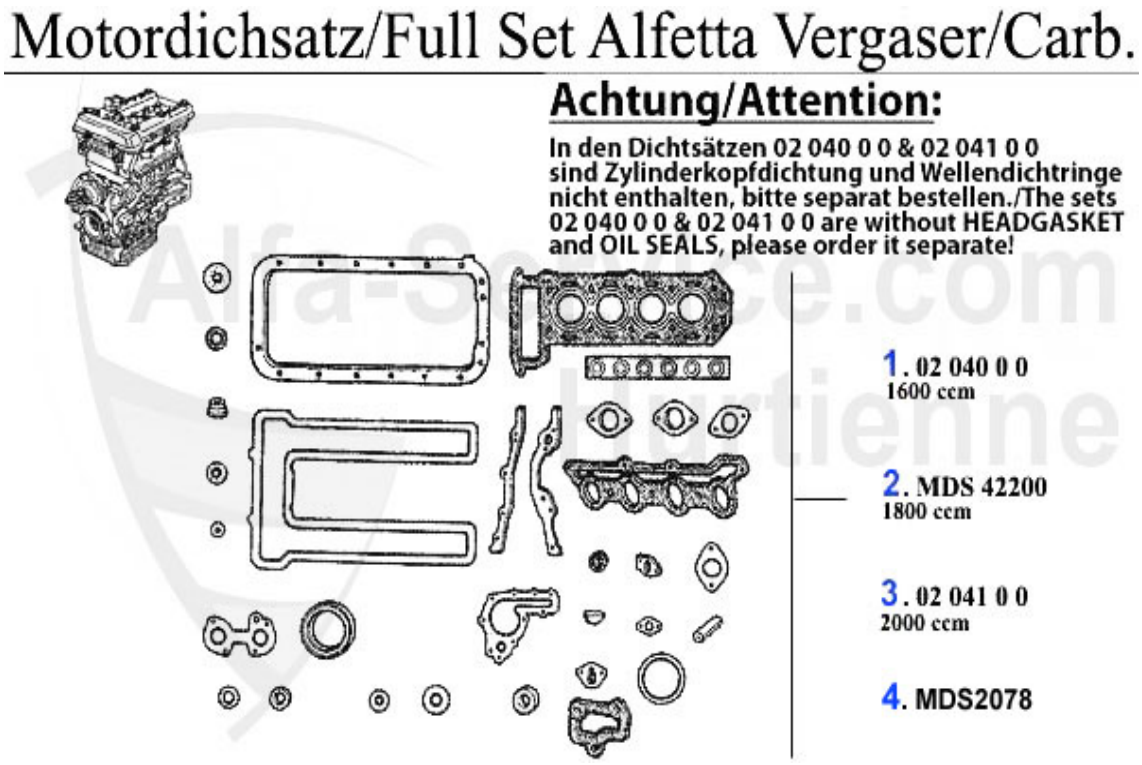

1	02 040 0 0	ENGINE GASKET SET 1600 WITHOUT HEAD GASKET AND OIL SEALS	73.49 EUR
2	MDS42200	ENGINE GASKET SET ALFETTA,GIULIETTA, 75,90 1.8 85 & 90 KW 79-89	152.86 EUR
3	02 041 0 0	ENGINE GASKET SET 2000 WITHOUT HEAD GASKET AND OIL SEALS	73.49 EUR
4	MDS16100	ENGINE GASKET SET ALFETTA,GIULIETTA,75 1.6, 1.8 81 KW COMPLETE 83-89	204.99 EUR
4	MDS2078	ENGINE GASKET SET 75/90 2.0/ALFETTA 2.0/ GIULIETTA/GTV 2.0 WITH HEAD GASKET (CARBURATOR MODELS)	190.00 EUR

GT/V/6 (116) > ENGINE > ENGINE GASKETS > FULL SET GTV/6

1	MDS42750	ENGINE GASKET SET GTV6,75V,90V6 WITHOUT HEAD GASKET	179.00 EUR
2	ZKD35775	HEADGASKET GTV6 LEFT,GTV/6, 75V6, 90V6, 2.5 V6	70.66 EUR
3	ZKD35770	HEADGASKET RIGHT ALFETTA GTV/6,75V6, 90V6, 2.5 V6	70.66 EUR

GT/V/6 (116) > ENGINE > COOLING SYSTEM > RADIATOR GTV/4

Kühler/Radiator GTV/4 (116)

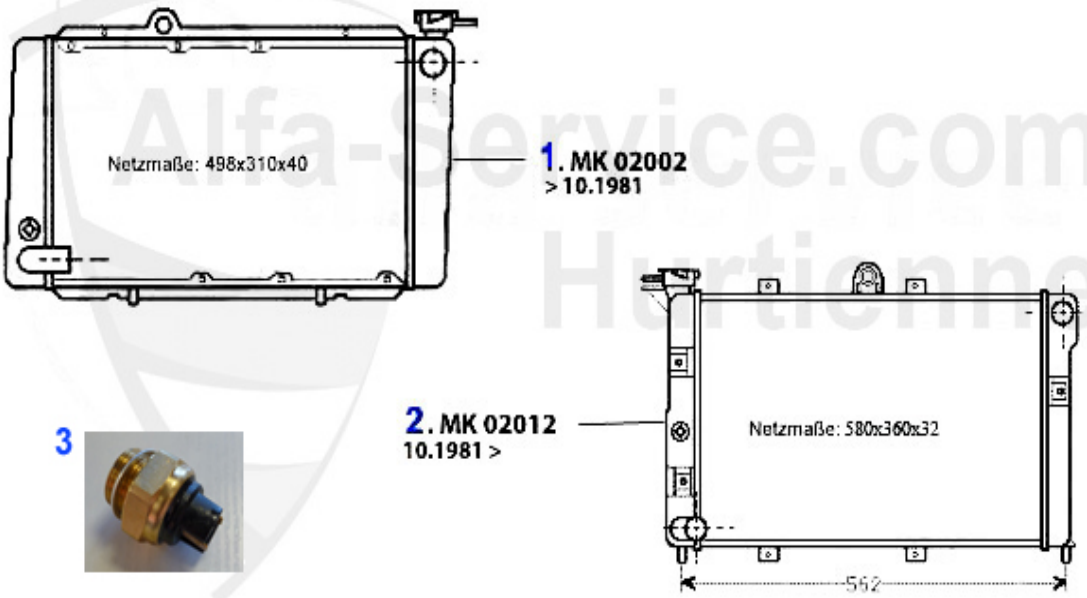

1	MK02002	OE.60726026 RADIATOR ALFETTA 1.6/1.8 75-84,2.0 77-84,GTV(116) 2.0,IMPORTANT: PAY ATTENTION TO RADIATOR-BLOG SIZE!!!	399.00 EUR
2	MK02012	OE.60719302 RADIATOR ALFETTA/ GIULETTA 1.8/2.0-IMPORTANT:PLEASE CHECK WEB DIMENSIONS	***
3	14 104 3 0	THERMOSWITCH for fan motor	14.90 EUR

GT/V/6 (116) > ENGINE > COOLING SYSTEM > RADIATOR GTV/6

1	MK32307	OE. 60732307 RADIATOR GTV/6 (116)	399.00 EUR
2	14 104 3 0	THERMOSWITCH for fan motor	14.90 EUR
3	KWB28480	COOLANT TANK GTV/6, (116)	98.00 EUR

Thermostat GTV/4 (116)

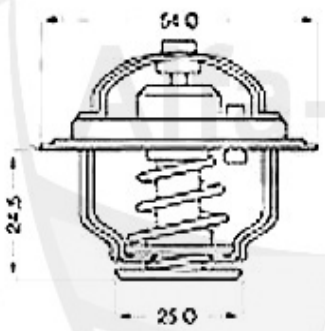

1. 08 008 0 0

2. 08 009 0 0

1	08 008 0 0	1300 - 2000 THERMOSTAT, PLUG IN VERSION	21.00 EUR
2	08 009 0 0	2000 THERMOSTAT with housing (carburetor model)	31.29 EUR

GT/V/6 (116) > ENGINE > COOLING SYSTEM > THERMOSTAT GTV/6

Thermostat GTV/6 (116)

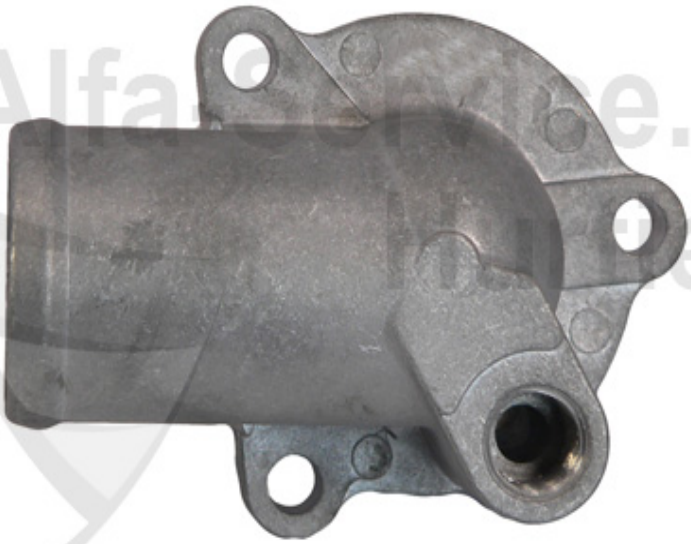

1	TH657283	OE. 60558491 THERMOSTAT 116 6-Cylinder, WITH GASKET	48.50 EUR

Wasserpumpe/Waterpump GTV/4 (116)

1	WP02510	WATER PUMP ALFETTA/GIULIETTA/GTV (116), MECHANICAL TACHOMETER 1.6/1.8/2.0 WITH BELT PULLEY	65.65 EUR
2	WP00510	OE. 60730469/60523035 WATERPUMP 116 w. PULLEY, wo. CONNECTION f. REV METER	98.48 EUR
3	WP00210	WATER PUMP ALFETTA,GIULIETTA,GTV (116) 1.6/1.8/TURBO/2.0,75,90 1.6/1.8/2.0/IE/ TS	71.75 EUR

Wasserpumpe/Waterpump GTV/6 (116)

1. WP 00610

Alfa-Service.com
Martienne

1	WP00610	OE. 60555345 WATERPUMP V6 116	102.49 EUR

GT/V/6 (116) > ENGINE > COOLING SYSTEM > HOSES GTV/4

1	KWS01631	OE. 60701631 FLEX SLEEVE Water hose GTV bottom	28.91 EUR
2	KWS01632	Water hose on the top of the radiator GTV/4 (116)	24.89 EUR
3	KWS16845	WATER HOSE WATERPUMP/THERMOSTAT FOR ALFETTA/GIULIETTA/GTV4 116	12.41 EUR

GT/V/6 (116) > ENGINE > COOLING SYSTEM > HOSES GTV/6

1	KWS28481	OE. 60728481 GTV/6 UPPER RADIATOR HOSE	23.75 EUR
2	KWS28483	OE. 60728483 GTV/6 LOWER RADIATOR HOSE TO THE DISTRIBUTER PIECE	18.90 EUR
3	KWS28484	OE. 60728484 GTV/6 LOWER RADIATOR HOSE DISTRIBUTOR PIECE/THERMOSTATE	20.48 EUR
4	KWS28485	OE. 60728485 GTV/6 LOWER RADIATOR HOSE DISTRIBUTOR PIECE/OVERFLOW CONTAINER	17.90 EUR
5	KWS28486	REAR WATER HOSE GTV6	17.73 EUR
6	KWS12986	WATER HOSE NECK/THERMOSTAT 75,164,RZ/SZ >91 6 CYL. OE 60512986	5.09 EUR

Motorlager/Engine Mount GT/V/4 (116)

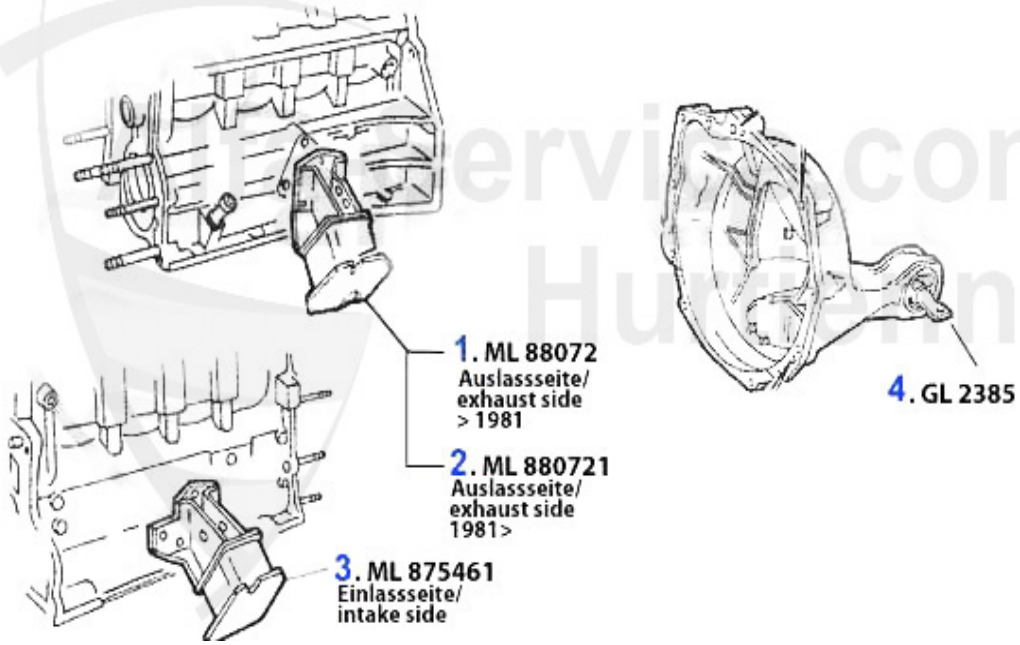

1	ML88072	Motorlager Auspuffseitig Alfetta Giulietta Bj. >81	***
2	ML880721	OE. 60723675 ENGINE MOUNT LEFT 116 4-CYL.	49.00 EUR
3	ML875461	OE. 60521085 ENGINE MOUNT RIGHT 116 4-CYL.	49.00 EUR
4	GL2385	OE. 60522199 ENGINE MOUNT REAR 4 CYL. (62mm)	32.50 EUR

GT/V/6 (116) > ENGINE > ENGINE MOUNT > ENGINEMOUNT GTV/6

Motorlager/Engine Mount GT/V/6 (116)

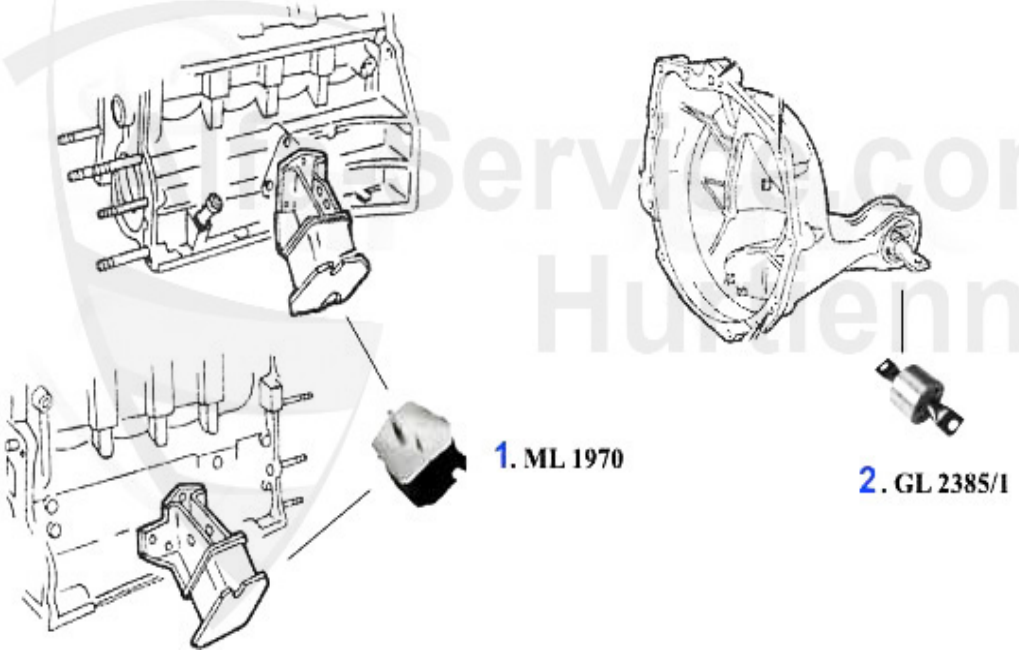

1	ML1970	ENGINE MOUNT GTV/6 LEFT/RIGHT 75 V6, RZ/SZ	59.50 EUR
2	GL2385/1	OE. 60522581 ENGINE MOUNT REAR 116 6-Cyl. (64mm)	36.50 EUR

GT/V/6 (116) > ENGINE > VALVE GEAR > CAMSHAFT GT/V/4

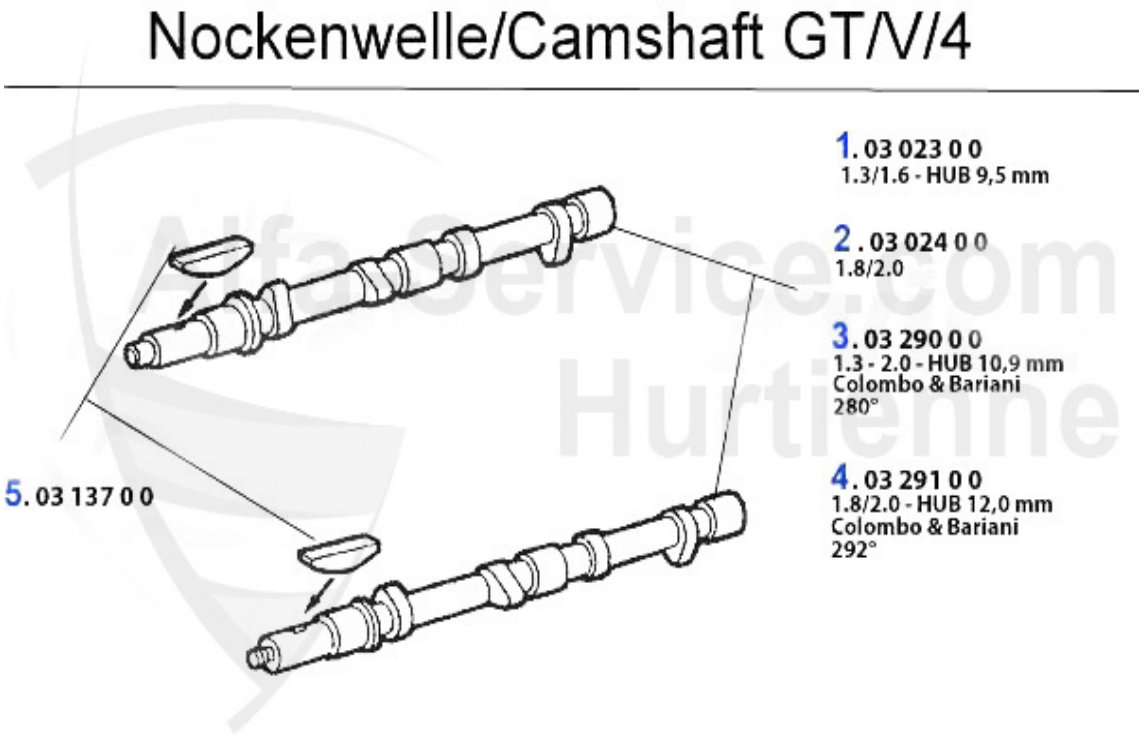

1	03 023 0 0	1300 - 1600 CAMSHAFT / Hub= 9.50 mm	***
2	03 024 0 0	CAM SHAFT - EXHAUST	299.00 EUR
3	03 290 0 0	SPORT CAMSHAFT COLOMBO&BARIANI 1300-2000, Lift=10.9mm, 280ø	253.39 EUR
4	03 291 0 0	SPORT CAMSHAFT COLOMBO & BARIANI 1750-2000, hub 12.0mm, 292ø	253.39 EUR
5	03 137 0 0	WEDGE FOR CAMSHAFTS	3.70 EUR

Nockenwelle/Camshaft GTV/6

1	NKW23305	Nockenwelle rechts 75,90 2.5 V6 GTV/6	***
2	NKW23306	Nockenwelle links 75,90 2.5 V6 GTV/6	289.00 EUR

GT/V/6 (116) > ENGINE > VALVE GEAR > TIMING CHAIN GTV/4

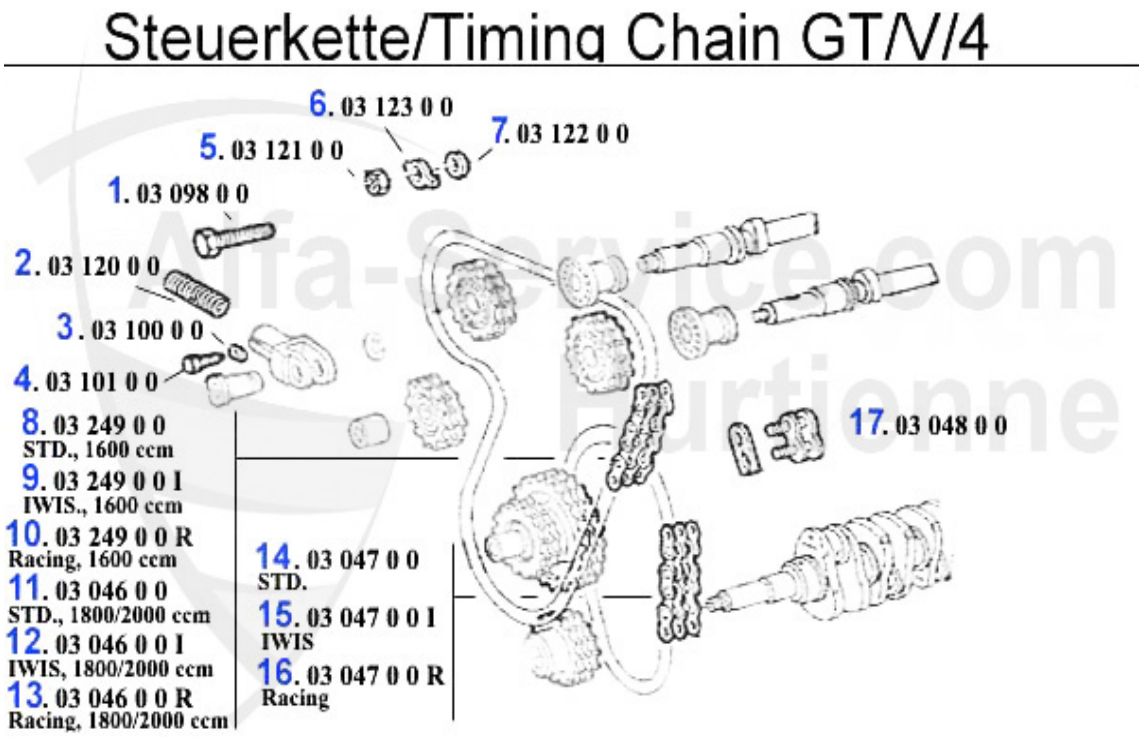

1	03 098 0 0	SAFETY BOLT FOR CAMSHAFTS	2.30 EUR
2	03 120 0 0	TIMING CHAIN TENSIONER SPRING	6.95 EUR
3	03 100 0 0	LOCK PLATE CHAIN TENSIONER	4.00 EUR
4	03 101 0 0	SCREW FOR TRACK TENSIONER	6.50 EUR
5	03 121 0 0	MOUNTING NUT-CHAIN WHEEL-CAMSHAFT	***
6	03 123 0 0	LOCK TAB CAMSHAFT	1.70 EUR
7	03 122 0 0	THRUST WASHER MOUNTING NUT	***
8	03 249 0 0	TIMING CHAIN 1600 LONG INCL. MASTER LINK	36.75 EUR
9	03 249 0 0 I	TIMING CHAIN IWIS 1600 LONG INCL. MASTER LINK	75.01 EUR
10	03 249 0 0 R	IWIS TIMING CHAIN 1600 INCL. CHAIN LOCK RACING VERSION	89.00 EUR
11	03 046 0 0	TIMING CHAIN 1750-2000 LONG INCL. MASTER LINK	37.85 EUR
12	03 046 0 0 I	TIMING CHAIN IWIS 1750-2000 INCL. MASTER LINK	74.90 EUR
13	03 046 0 0 R	TIMING CHAIN IWIS RACING 1750-2000 INCLUDED MASTER LINK	86.17 EUR
14	03 047 0 0	TIMING CHAIN 1300-2000 SHORT ENDLESS	20.35 EUR
15	03 047 0 0 I	TIMING CHAIN IWIS 1300-2000 SHORT ENDLESS	40.60 EUR
16	03 047 0 0 R	TIMING CHAIN IWIS RACING 1300-2000 SHORT ENDLESS	45.85 EUR
17	03 048 0 0	MASTER LINK	3.20 EUR

GT/V/6 (116) > ENGINE > VALVE GEAR > VALVE MECHANISM GTV/4

Ventiltrieb/Valve Mechanism GT/V/4

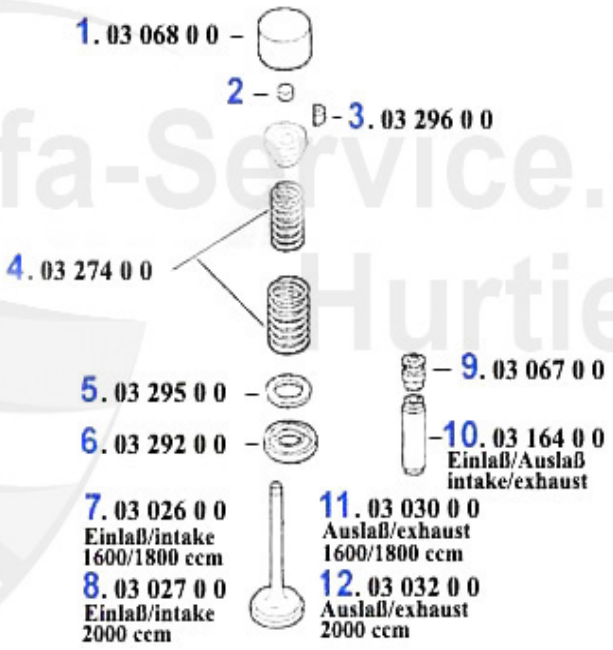

1	03 068 0 0	CAM FOLLOWER OE60612178	23.50 EUR
2	03 043 0 0	VALVE ADJUSTING SHIMS	5.40 EUR
2	03 114 0 0	VALVE ADJUSTING SHIMS 200 pcs per box 2.525 - 3.500 mm	315.00 EUR
2	03 084 0 0	VALVE ADJUSTING SHIMS 205 pcs per box 1.500 - 2.500 mm	279.00 EUR
3	03 296 0 0	VALVE COTTERS 9mm	1.20 EUR
4	03 274 0 0	VALVE SPRING SET 16 pcs	59.80 EUR
5	03 295 0 0	OE.60502912 WASHER INSIDE LOWER VALVE SPRING PLATE	1.61 EUR
6	03 292 0 0	CUP FOR VALVE WASHER	***
7	03 026 0 0	INLET VALVE 1600-1750 std	10.25 EUR
8	03 027 0 0	INLET VALVE 2000 ALL MODELS EXC. SPIDER 1990-93 INJECTION	11.19 EUR
9	03 255 0 0	VALVE SEAL WITH SPRING INTAKE AND EXHAUST SIDE (GREEN)	4.86 EUR
10	03 164 0 0	INLET & EXHAUST VALVE GUIDE FUEL-INJECTED MOTOR - SPIDER	11.19 EUR
11	03 030 0 0	EXHAUST VALVE 1600 - 1750 std.	16.45 EUR
12	03 032 0 0	EXHAUST VALVE 2000 std.	17.26 EUR

GT/V/6 (116) > ENGINE > VALVE GEAR > VALVE MECHANISM GTV/6

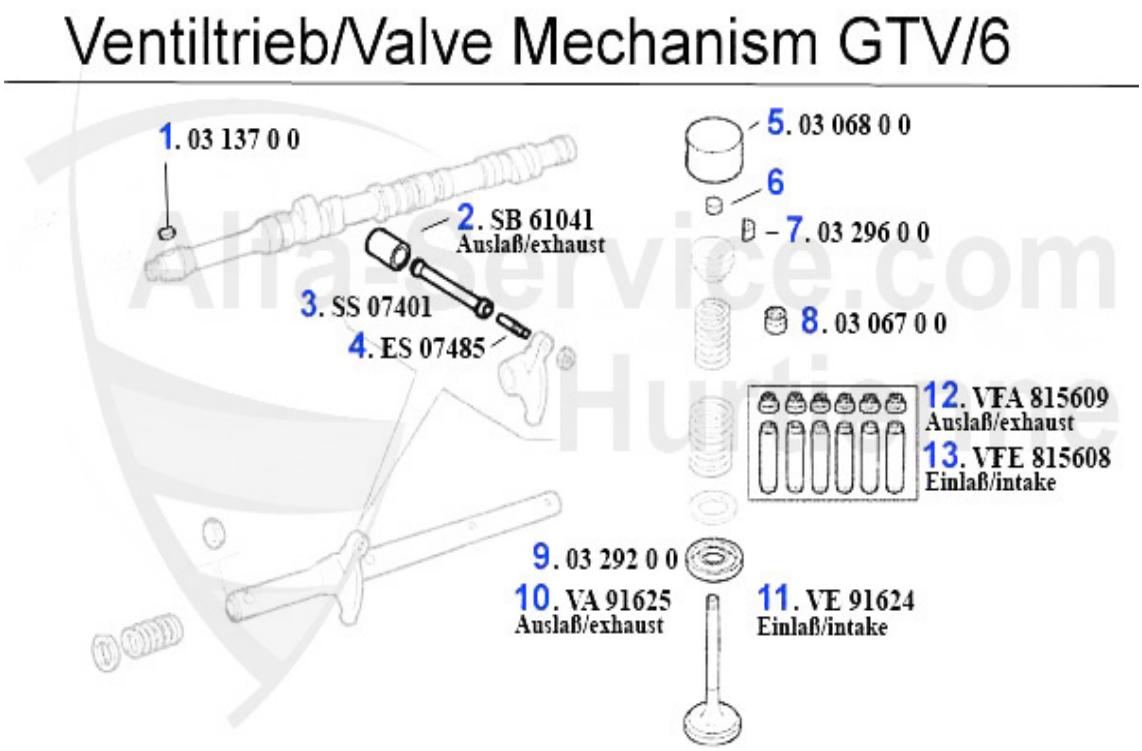

1	03 137 0 0	WEDGE FOR CAMSHAFTS	3.70 EUR
2	SB61041	OE. 60561041 EKHAUST TAPPET 6-CYL.	***
3	SS07401	Stösselstange (Auslasseite) 75,155 164,166,RZ,SZ,gtv/spider (916),GTV/ 6	50.86 EUR
4	ES07485	Einstellschraube f. Kipphebelwelle 75,155,164,166,RZ,SZ,gtv/spider (916),GTV/6	3.45 EUR
5	03 068 0 0	CAM FOLLOWER OE60612178	23.50 EUR
6	03 084 0 0	VALVE ADJUSTING SHIMS 205 pcs per box 1.500 - 2.500 mm	279.00 EUR
6	03 043 0 0	VALVE ADJUSTING SHIMS	5.40 EUR
6	03 114 0 0	VALVE ADJUSTING SHIMS 200 pcs per box 2.525 - 3.500 mm	315.00 EUR
7	03 296 0 0	VALVE COTTERS 9mm	1.20 EUR
8	03 255 0 0	VALVE SEAL WITH SPRING INTAKE AND EXHAUST SIDE (GREEN)	4.86 EUR
9	03 292 0 0	CUP FOR VALVE WASHER	***
10	VA91625	OE. 60810441 Valve-Exhaust 6-Cylinder 116	33.00 EUR
11	VE91624	OE. 60523548 Valve-Intake 6-Cylinder 116	***
12	VFA815609	OE. 60605721 Valve Guide-Exhaust 6-Cylinder 116	9.75 EUR
13	VFE815608	OE. 60737367 Valve Guide-Intake 6-Cylinder 116	9.75 EUR

Zahnriemen/Timing Belt GTV/6

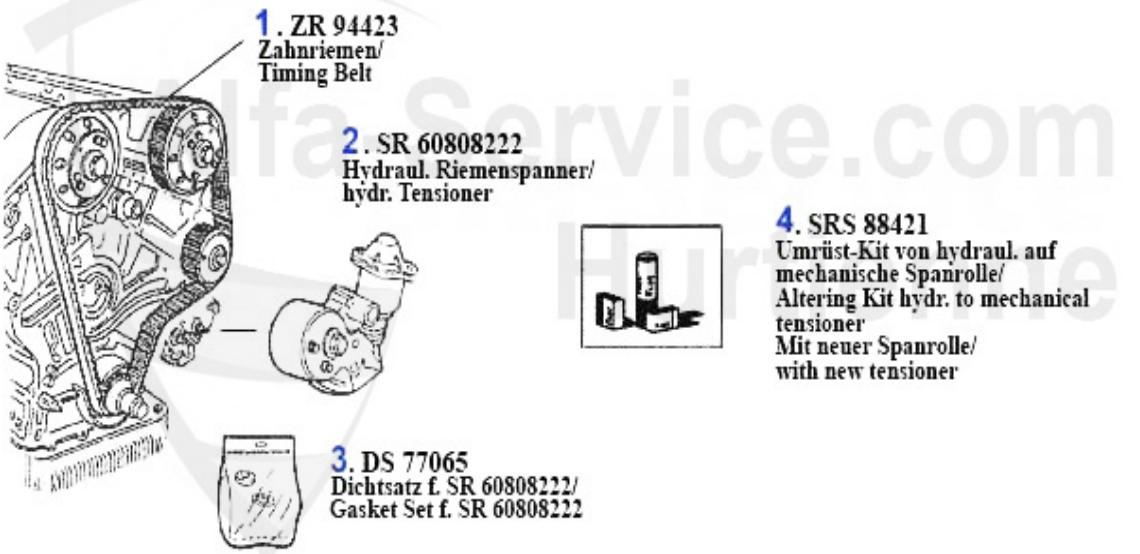

1	ZR94423	OE. 60562106 TIMING BELT	38.57 EUR
2	SR60808222	BELTTENSIONER HYDRAULIC 75,155,RZ,SZ,164	***
3	DS77065	OE. 60777065 GASKET-SET F. BELTSTRETCHER	39.90 EUR
4	SRS88421	ALTERING KIT TIMING BELT TENSIONER HYDRAULIC TO MECHANIC V6	175.00 EUR

GT/V/6 (116) > FILTER > FILTER

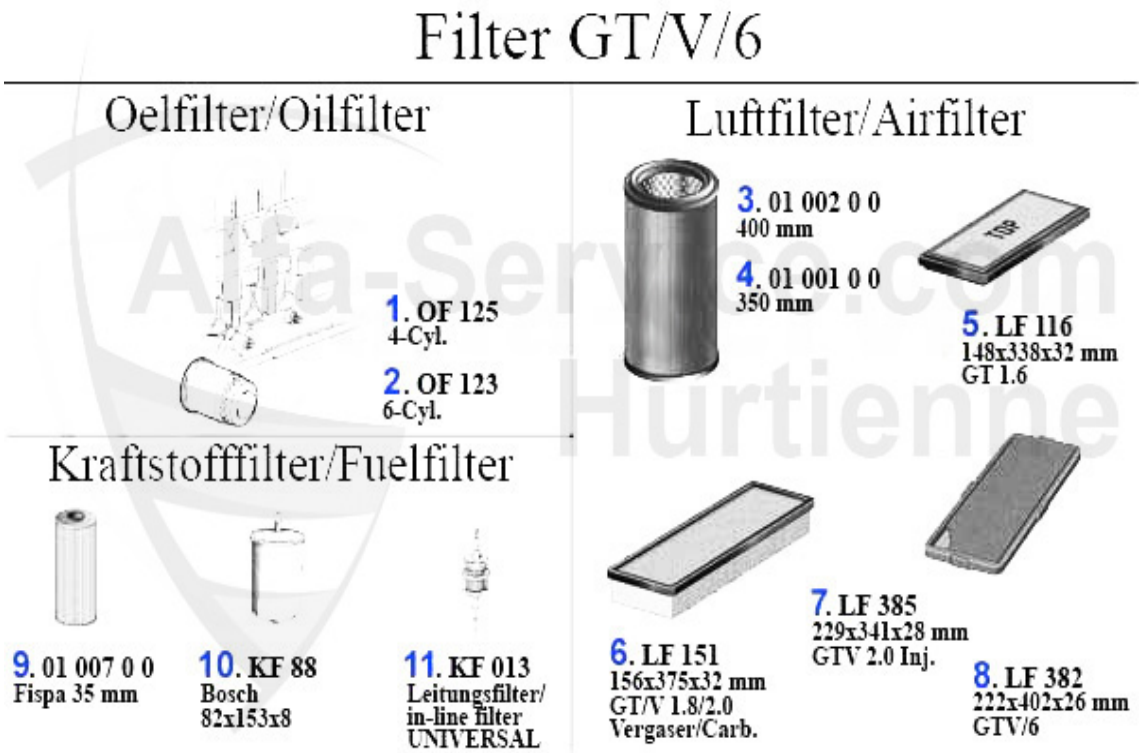

1	OF125	OIL FILTER 75, 90, 145/6, 155, 164 ALFETTA, GIULIETTA, div. 105 screw on cartridge	10.00 EUR
2	OF123	OE. 60553431/60537470/60533494/60521128 OILFILTER	10.00 EUR
3	01 002 0 0	AIR FILTER 1300-2000 400mm	15.90 EUR
4	01 001 0 0	AIRFILTER 1600-2000 350mm	14.95 EUR
5	LF116	AIR FILTER ALFETTA,GIULIETTA,GTV4 (116) 1.3/1.6, FIRM	***
6	LF151	AIR FILTER 75,90,ALFETTA,GIULIETTA,GTV4 (116), 2.0, FIRM	21.49 EUR
7	LF385	Luftfilter 6,75,90,Spider'90, Alfetta/GTV (116) 4-zylinder eckig	20.00 EUR
8	LF382	AIR FILTER 75/90 GTV/6(116),RZ,SZ 6-CYL. SQUARE	28.99 EUR
9	01 007 0 0	FUEL FILTER FISPA 35mm	7.50 EUR
10	KF88	FUEL FILTER 75, 90, 164, ALFETTA GIULIETTA, SPIDER (115), GTV (116), RZ, SZ, in-line filter	20.52 EUR
11	KF013	Kraftstoffleitungsfilter diverse Modelle (universal)	4.62 EUR

GT/V/6 (116) > EXHAUST SYSTEM > GTV/4

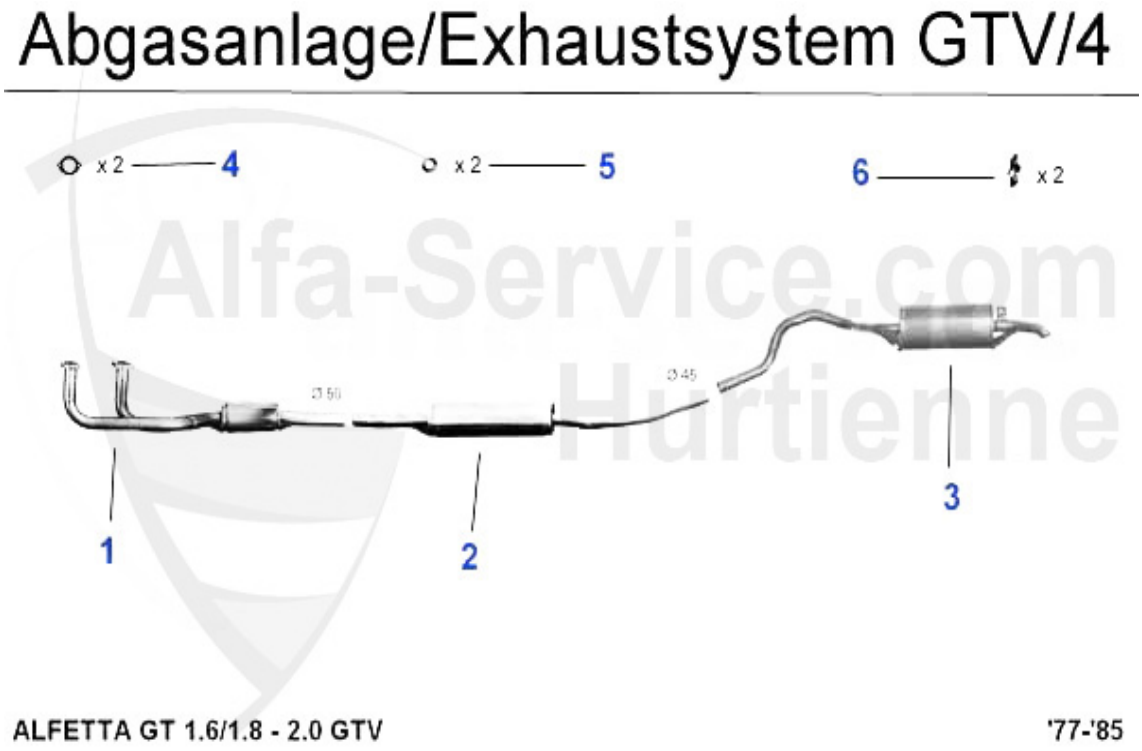

1	VSD103703 Vorschalldämpfer GTV (116) 1.6 Bj. 77-85 (org. einteilig mit Mitteltopf)	82.49 EUR
1	VSD103803 OE. 60731974 FRONT MUFFLER GTV (116) 1.8, 2.0 YEAR 77-85	76.95 EUR
2	MSD103776 CENTER MUFFLER GTV (116) 1.6,1.8,2.0 77-85	88.66 EUR
3	NSD103707 REAR SILENCER GTV 116 4-CYLINDER	84.12 EUR
4	SAT094413 OE 60777697, GASKET VSD ALFETTA, GIULIETTA,75,90,155,164	3.89 EUR
5	SAT091011 OE 60521386, RUBBER RING EXHAUST MOUNTING DIVERSE TYPES	1.23 EUR

GT/V/6 (116) > EXHAUST SYSTEM > GTV/4 Sport

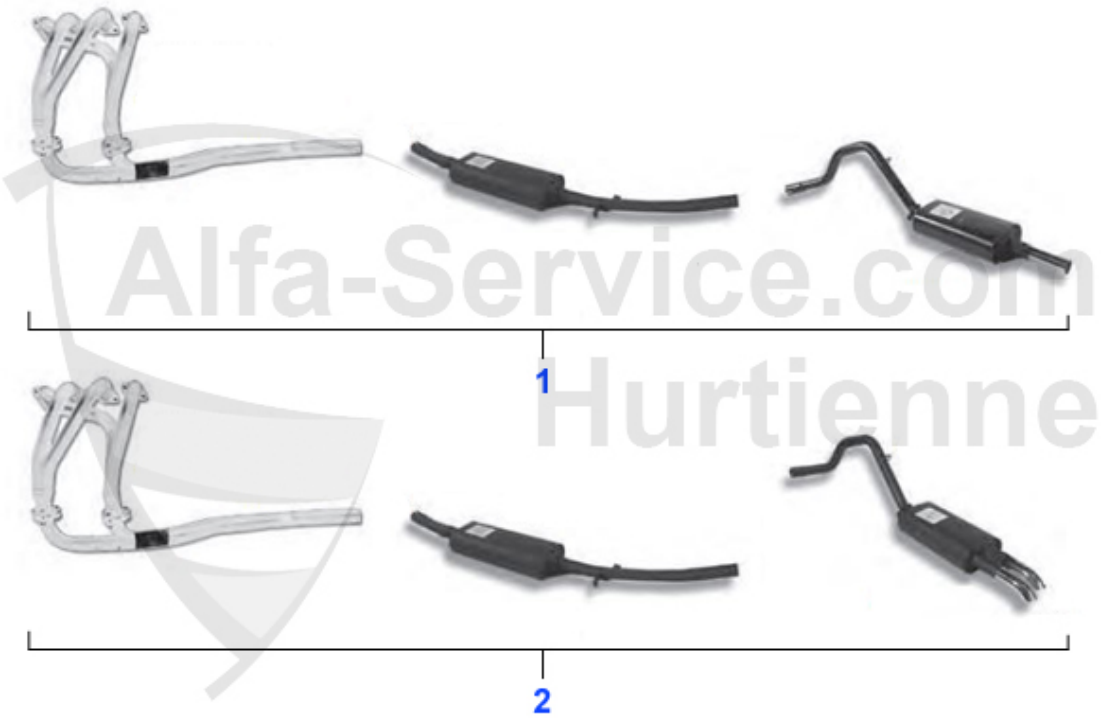

Alfa-Service.com Hurtienne

1	SPA11641	Sportauspuffanlage Alfetta GT 1,6-1,8-2,0 (72-85) 1xEndrohr 45mm Dm	952.00 EUR
2	SPA11642	Sportauspuffanlage Alfetta GT 1,6-1,8-2,0 (72-85) Endtopf mit 2 Rohren 45mm	952.00 EUR

GT/V/6 (116) > EXHAUST SYSTEM > GTV/6

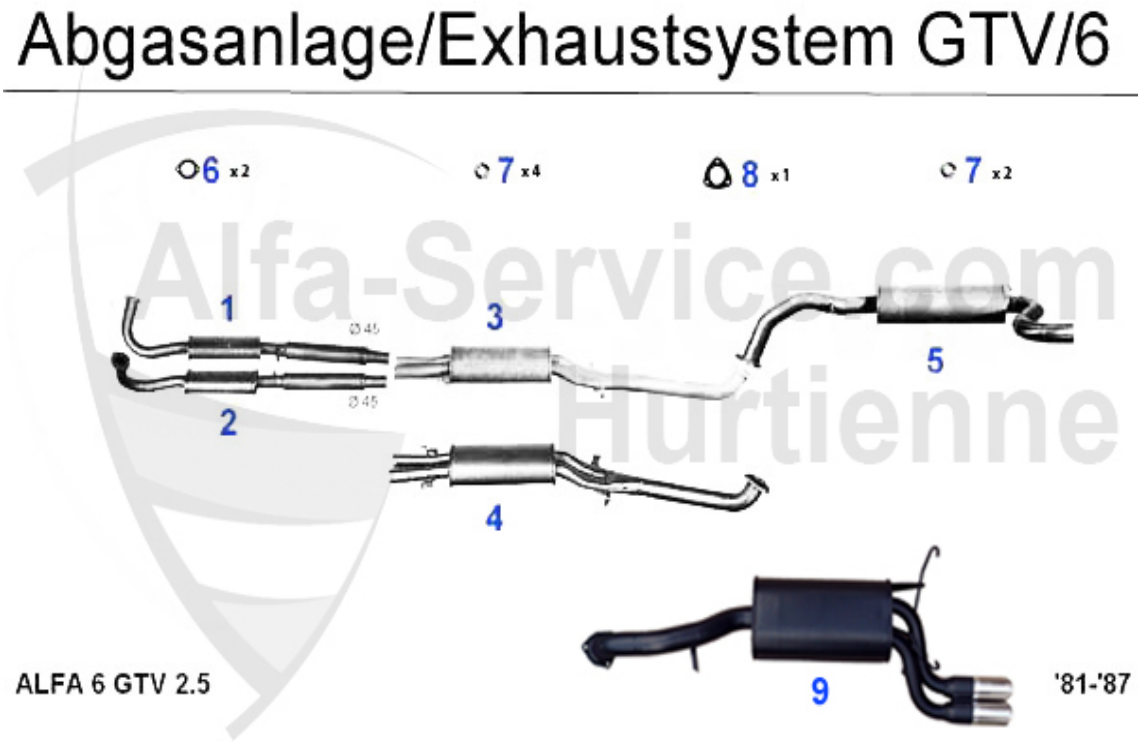

1	VSD105203	Vorderer Topf rechts 75,90,GTV(116) 6-zylinder	135.42 EUR
2	VSD105213	FRONT MUFFLER LEFT 75/90/GTV (116) 6 CYL.	135.45 EUR
3	MSD105206	CENTER MUFFLER GTV6 >7.84	157.98 EUR
4	MSD105406	CENTER MUFFLER GTV6 7.84>	157.98 EUR
5	NSD105207	END MUFFLER ALFA 6 GTV 2.5	166.20 EUR
6	SAT094406	GASKET FRONT MUFFLER GTV/6,75/90 V6	3.64 EUR
7	SAT091011	OE 60521386, RUBBER RING EXHAUST MOUNTING DIVERSE TYPES	1.23 EUR
8	SAT094483	CATALYST GASKET 164 SUPER TURBO CENTER + END MUFFLER GTV/6	5.64 EUR

GT/V/6 (116) > EXHAUST SYSTEM > GTV/6 Sport

1	SPA11661	Sportauspuffanlage GTV 6 (81-97) Endrohr 60mm Dm	1576.75 EUR

GT/V/6 (116) > CABLES > CABLES

1	MHZ85462	Motorhaubenzug GTV/6	49.94 EUR

GT/V/6 (116) > DRIVETRAIN > DRIVESHAFT > DRIVESHAFT GTV/4

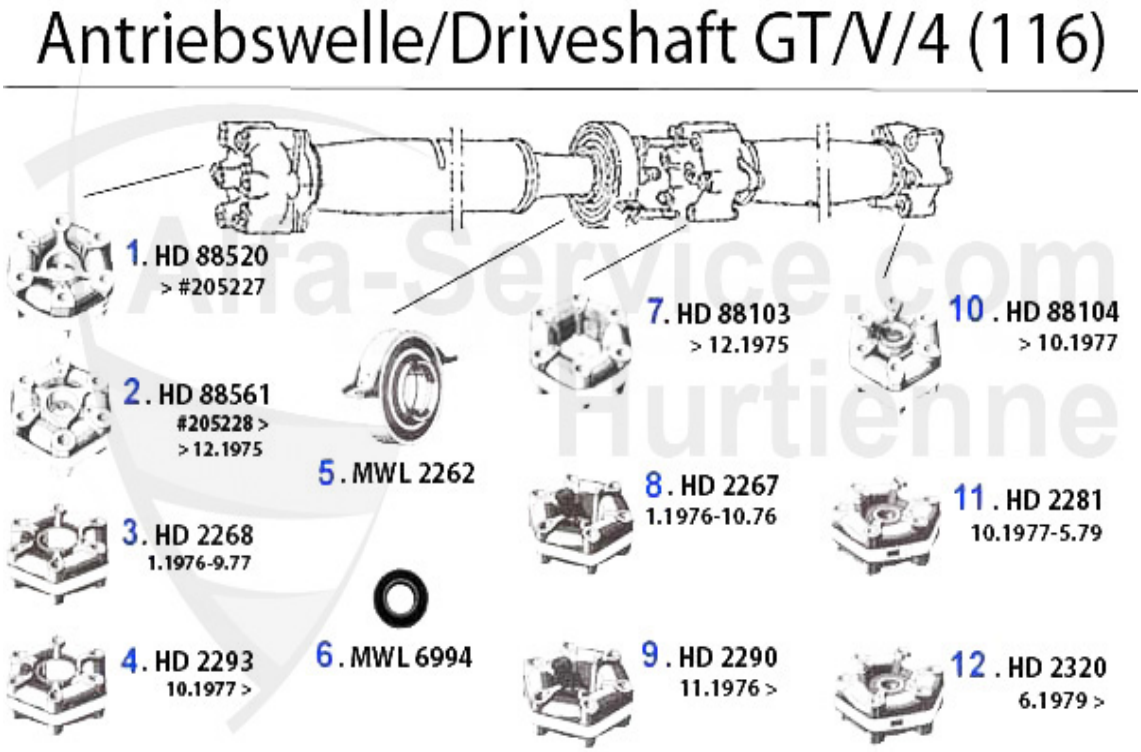

1	HD88520	DRIVE SHAFT MOUNTING FRONT ALFETTA OE. 60725180/116231530110	81.04 EUR
2	HD88561	HD-Scheibe vorne Alfetta # 205228> Bj. >12.75	***
3	HD2268	FRONT PROPSHAFT ALFETTA 1.76-9-77	***
4	HD2293	FRONT FLEX DISC 116 4-Cylind. OE. 60521648	***
5	MWL2262	OE.60505302 drive shaft support 75,90 4 cyl. 33 4x4 alfetta,giulietta	47.71 EUR
6	MWL6994	OE.60505303 OUTER BEARING CLUTCH HOUSING 116, 4 CYL.	23.80 EUR
7	HD88103	HD-Scheibe mitte Alfetta Bj. >12.75	***
8	HD2267	CENTER PROPSHAFT ALFETTA >10.76, GIULIETTA 81>	89.00 EUR
9	HD2290	MIDDLE FLEX DISC ALFETTA, GIULIETTA 11.1976 > , 75,90	89.00 EUR
10	HD88104	DRIVE SHAFT MOUNTING MIDDLE ALFETTA OE. 60723970/116001502309 NOT AVAILABLE ANYMORE	***
11	HD2281	DRIVE SHAFTMOUNTING REAR ALFETTA OE. 60725177/116081504402	101.55 EUR
12	HD2320	REAR FLEX DISC 116 4-Cylind. OE. 60521631	81.04 EUR

GT/V/6 (116) > DRIVETRAIN > DRIVESHAFT > DRIVESHAFT GTV/6

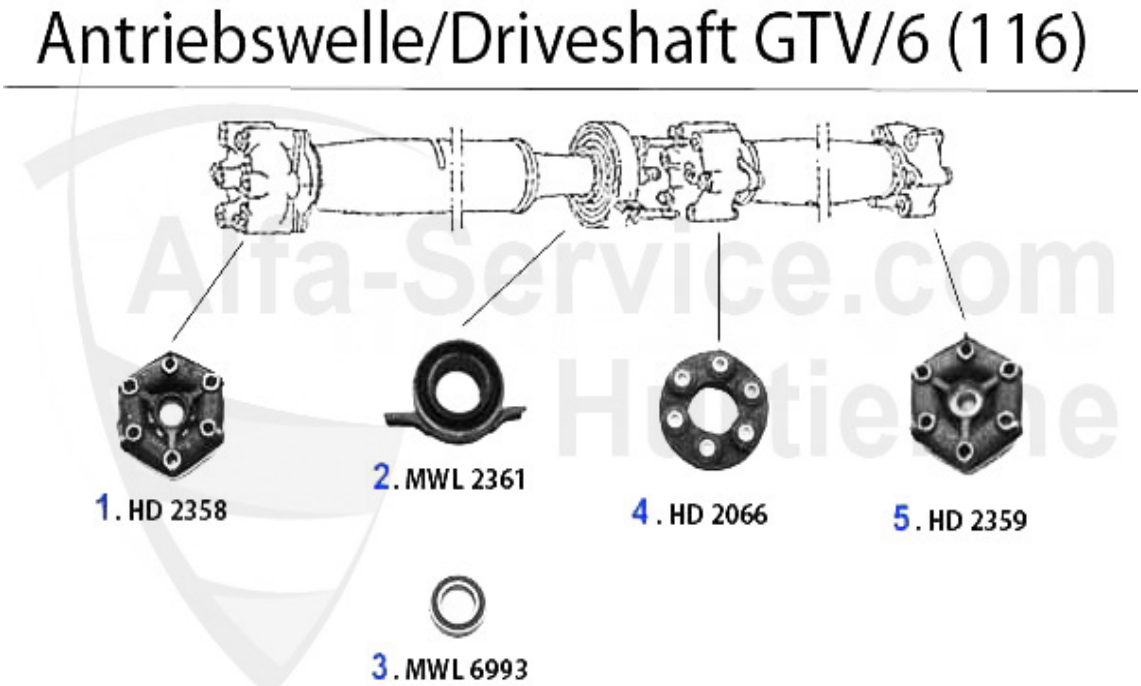

1	HD2358	FRONT FLEX DISC GTV6, 75, 90 2500-3000 OE. 60518193	95.00 EUR
2	MWL2361	OE. 60522599 DRIVE SHAFT SUPPORT 116 6-Cyl.	67.83 EUR
3	MWL6993	OE.71728684, BEARING DRIVE SHAFT SUPPORT 6 CYL.	23.80 EUR
4	HD2066	GTV 6 / 75 3,0 CENTER FLEX DISC	105.01 EUR
5	HD2359	REAR FLEX DISC GTV6, 75, 90 2500-3000 OE. 60522592	119.00 EUR

Seitenwelle/Side Shaft GT/V/4

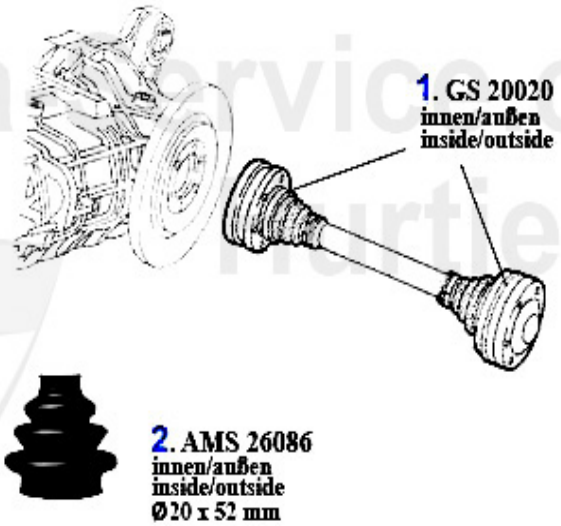

1	GS20020	INNER/OUTER DRIVESHAFT JOINT 116 4-CYLINDER	111.82 EUR
2	AMS26086	OE. 60729242 SIDE SHAFT BOOT inside/outside 116-4Cyl.	16.31 EUR

Seitenwelle/Side Shaft GTV/6

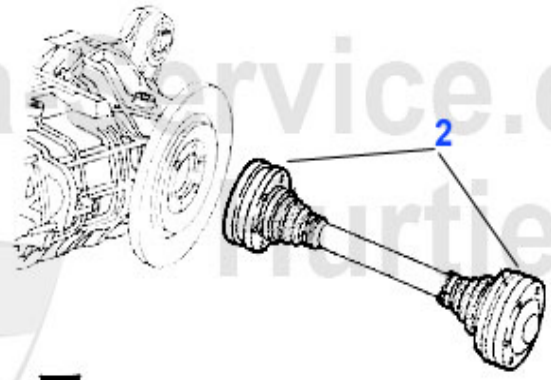

1 . AMS 26113
innen/außen
inside/outside
Ø 22 x 57 mm

1	AMS26113	OE. 60728419 BOOT SET f. DRIVE SHAFT	13.40 EUR
2	GS20021	OE. 60522104 REAR AXLE JOINT INNER/ OUTER 116 4-CYL.	132.34 EUR

GT/V/6 (116) > DRIVETRAIN > GEARBOX > DIFFERENTIAL

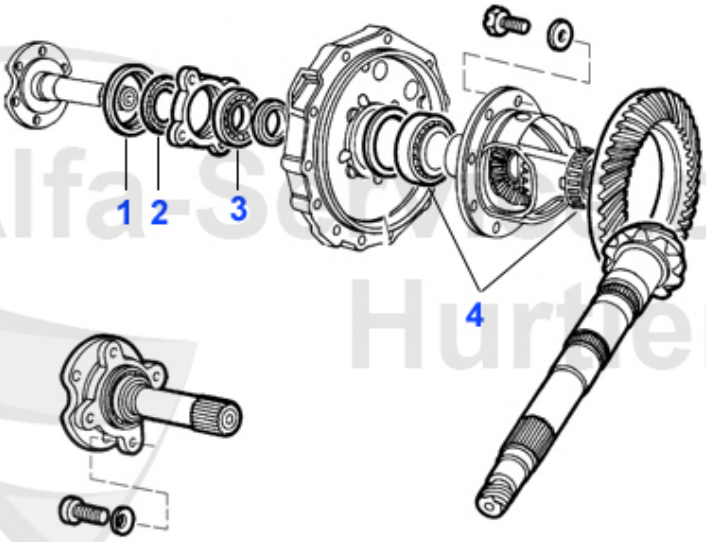

1	WD21228	JOINT RING REAR DIFF. 116,AR 75 4 AND 6 CYL.,RZ/SZ	4.90 EUR
2	WD21231	JOINT RING REAR DIFFENRENTIAL 116,AR 75 4 AND 6 CYLINDER,RZ/SZ	29.00 EUR
3	GL8685	SHOULDER BEARING DIFF. AR75 + GTV6 OE 71728685	23.80 EUR
4	GL8680	Schulterlager Diff.AR116	43.99 EUR

GT/V/6 (116) > DRIVETRAIN > GEARBOX > GEARBOX MECHANIK

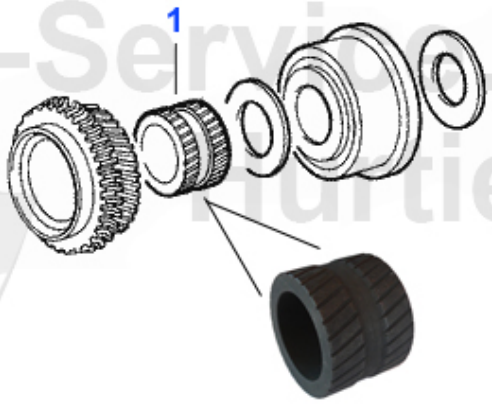

1	GL23042	OE. 60523042 BUSHING	58.99 EUR

GT/V/6 (116) > DRIVETRAIN > GEARBOX > GEAR MOUNT GT/V/4

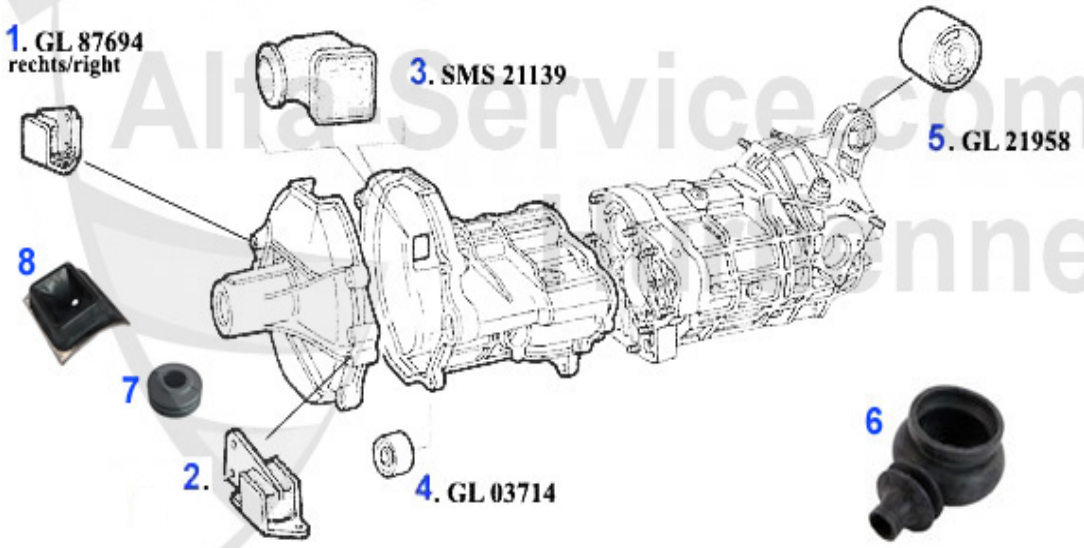

1	GL87694	OE. 60521143 GEAR MOUNT 116 4-CYLINDER RIGHT	***
2	GL87688	OE. 60723913 GEAR MOUNT 116, 4-CYL LEFT SIDE OLD VERSION	29.24 EUR
3	SMS21139	CAP FOR RELEASE LEVER ALFETTA, GIULIETTA,GTV(116),75,90	***
4	GL03714	OE.60703714 GEARBOX MOUNT 75,90 RZ,SZ	***
5	GL21958	OE. 60521958 GEAR MOUNT REAR 75,90, RZ/SZ,ALFETTA,GIULIETTA,GT/V(116)	22.05 EUR
6	SMS2345	GEAR LEVER BOOT ALFETTA,GIULIETTA,GTV (116)	9.78 EUR
7	SMS26078	RUBBER BOTH FOR SHIFT LEVER/ALFETTA/GTV/ GIULIETTA (116)	***
8	SMS2346	OE. 60701783 COVER f. GEARSTICK 116	***

GT/V/6 (116) > DRIVETRAIN > GEARBOX > GEAR MOUNT 1.6/1.8/2.0

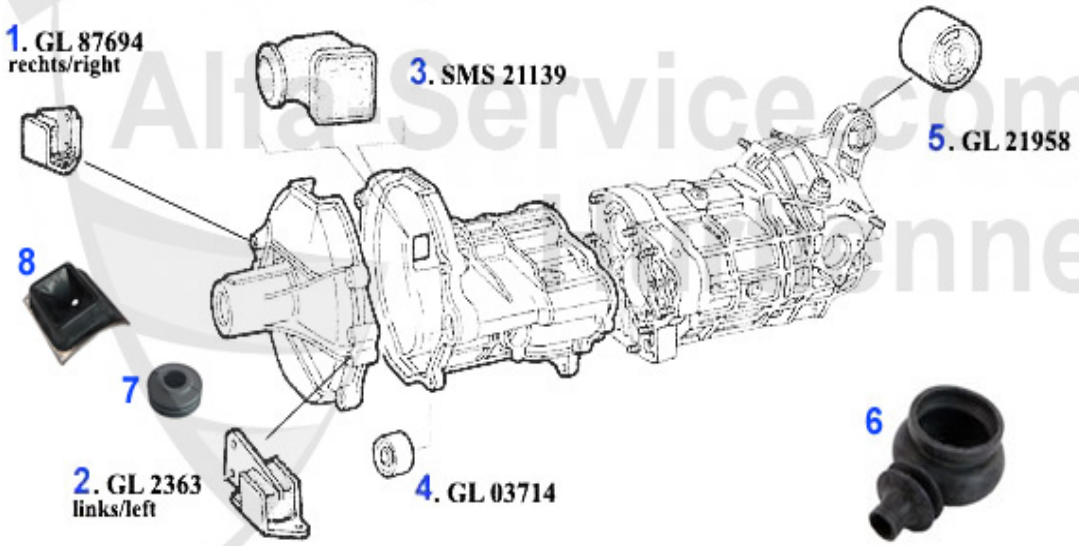

1	GL87694	OE. 60521143 GEAR MOUNT 116 4-CYLINDER RIGHT	***
2	GL2363	OE. 60701586 GEAR MOUNT 116 4-CYLINDER LEFT, AR75, ALFETTA, GIULIETTA	22.47 EUR
3	SMS21139	CAP FOR RELEASE LEVER ALFETTA, GIULIETTA,GTV(116),75,90	***
4	GL03714	OE.60703714 GEARBOX MOUNT 75,90 RZ,SZ	***
5	GL21958	OE. 60521958 GEAR MOUNT REAR 75,90, RZ/SZ,ALFETTA,GIULIETTA,GT/V(116)	22.05 EUR
6	SMS2345	GEAR LEVER BOOT ALFETTA,GIULIETTA,GTV (116)	9.78 EUR
7	SMS26078	RUBBER BOTH FOR SHIFT LEVER/ALFETTA/GTV/ GIULIETTA (116)	***
8	SMS2346	OE. 60701783 COVER f. GEARSTICK 116	***

GT/V/6 (116) > DRIVETRAIN > GEARBOX > GEAR MOUNT GTV/6

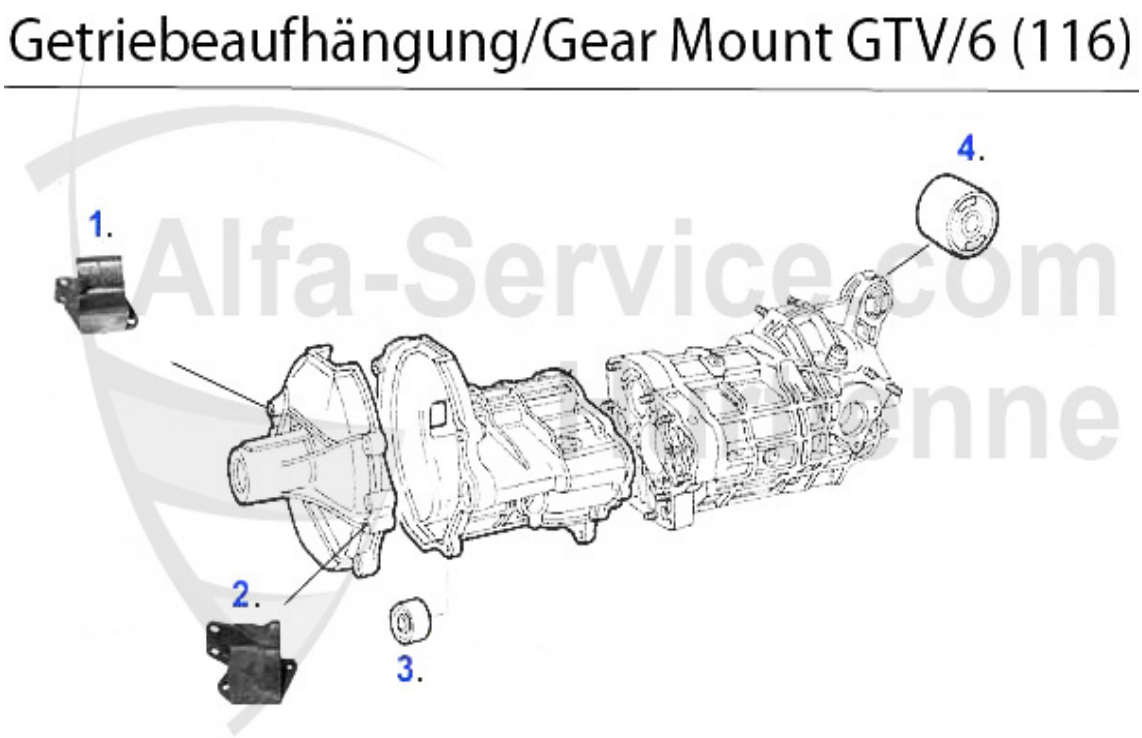

1	GL2364	GEARBOX MOUNT L 116 6-CYL.	38.00 EUR
2	GL2362	GEARBOX MOUNT R 6-CYL. 116	38.00 EUR
3	GL03714	OE.60703714 GEARBOX MOUNT 75,90 RZ,SZ	***
4	GL21958	OE. 60521958 GEAR MOUNT REAR 75,90, RZ/SZ,ALFETTA,GIULIETTA,GT/V(116)	22.05 EUR

GT/V/6 (116) > DRIVETRAIN > CLUTCH > CLUTCH SET GTV/4

Kupplungs-Kit/Clutch Set GTV/4

1	KK009003	CLUTCH-KIT,ALFETTA,GUILIETTA,75, GT/V (116),1.6/1.8/2.0/IE/TS/TD 1974-1992, 215mm	256.85 EUR
2	KKNL024	NEEDLE BEARING 75,RZ/SZ,ALFETTA, GIULIETTA,GTV (116)	***

GT/V/6 (116) > DRIVETRAIN > CLUTCH > CLUTCH SET GTV/6

2	KK101300	REPLACEMENT FROM TWIN CLUTCH TO SINGLE CLUTCH, 190mm KIT WITH FLYWHEEL BALANCED WITH SACHS PARTS	859.00 EUR
3	KKNL024	NEEDLE BEARING 75,RZ/SZ,ALFETTA, GIULIETTA,GTV (116)	***
4	KK999700	2 DISC CLUTCH COMPLIETE SET FOR GTV-6 / ALFA 75 2,5, YOU MUST USE THE OLD MIDDLE RING	769.00 EUR

GT/V/6 (116) > DRIVETRAIN > CLUTCH ACTUATION

Kupplungsbetätigung/Clutch Actuation GTV/4/6 (116)

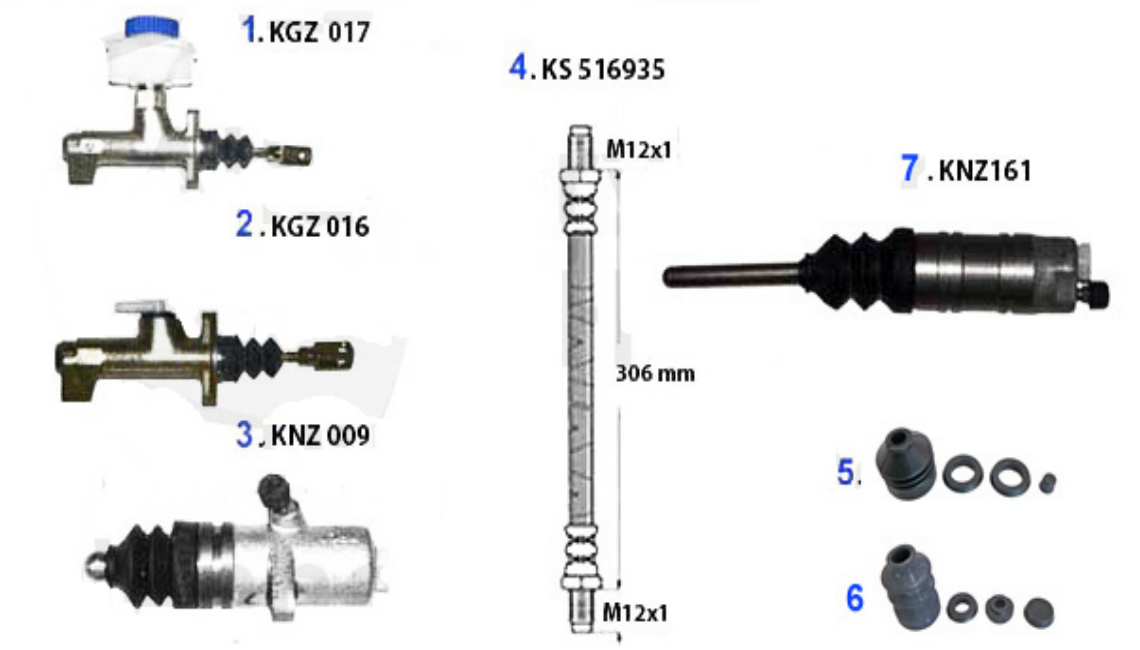

1	KGZ017	CLUTCH MASTER CYLINDER, ALFETTA, GIULIETTA, GTV, GTV/6(116), WITH RESERVOIR	97.46 EUR
2	KGZ016	OE. 60518194 CLUTCH MASTER CYLINDER 116 1983>	81.04 EUR
3	KNZ009	CLUTCH SLAVE CYLINDER,75,90 ALFETTA, GIULIETTA, GTV,GTV/6(116)	60.52 EUR
4	KS516935	CLUTCH HOSE 116	17.96 EUR
5	RKG1134	REPAIR KIT MASTER CYLINDER 116 RZ/SZ	26.18 EUR
6	RKN3156	REPAIR KIT SLAVE CYLINDER 116 RZ/SZ	26.18 EUR
7	KNZ161	CLUTCH SLAVE CYLINDER, WITHOUT VALVE PUSH ROD	95.20 EUR

GT/V/6 (116) > BRAKE > BRAKE DISCS

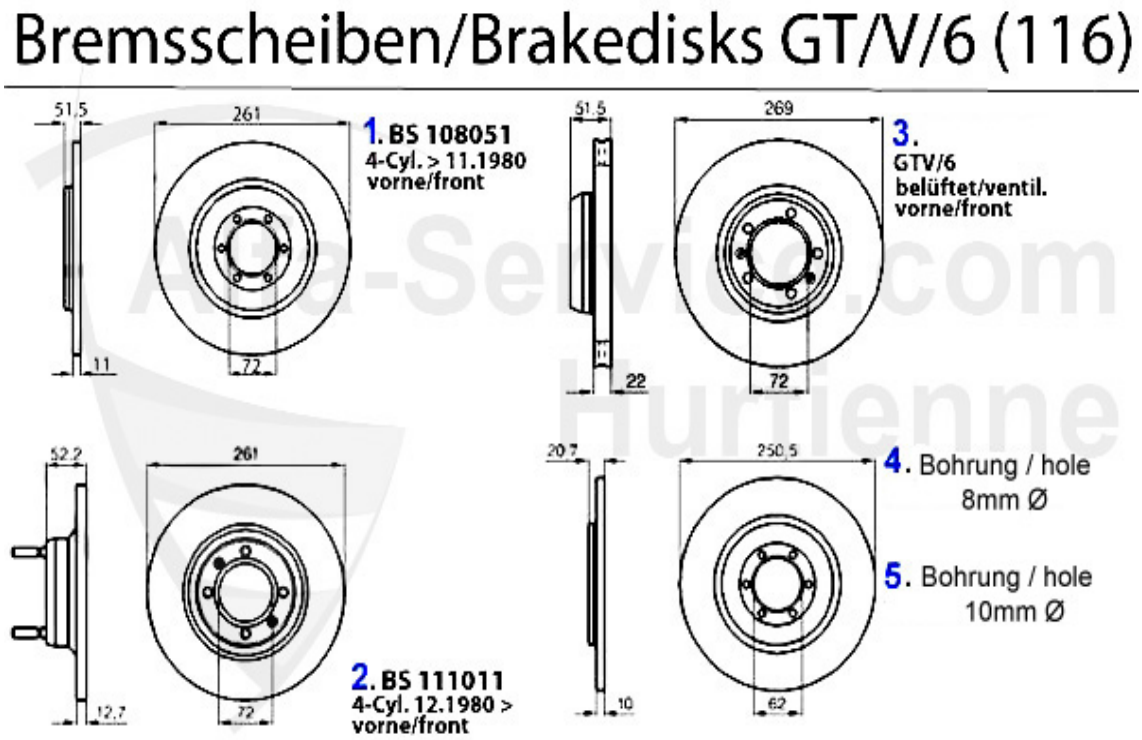

1	BS108051	OE.60703487,FRONT BRAKE DISC ALFETTA 1.6/1.8/2.0L 72-84/2.0 TD 79-81,GTV 116,1.6/1.8/2.0 YEAR 76-82	48.73 EUR
2	BS111011	Bremsscheibe VA Alfetta 2.0/2.4 TD bj. 81-84,GTV (116) bj. 78-86, 75 2.0 bj. 05.85-10.88/2.4 TD bj. 09.85-09.88,90 1.8/2.0/ie/V6 bj. 09.84-08.87	56.42 EUR
3	BS118351	OE 60522092, BRAKE DISC FRONT 75 1.8 TURBO/2.0 TS 2.5/3.0 V6,90 2.5 V6, GTV/6 (116)	76.95 EUR
3	BS 183	FRONT SPORT BRAKE DISK GTV 6, 75 T- SPARK/2.5/3.0 SLOTTED AND PERFORATED	107.50 EUR
4	BS101515	OE 60701786, BRAKE DISC REAR ALFETTA YEAR 11.81>, GIULIETTA ALL, GTV (116) YEAR 11.80>, 75 1.6/1.8/ie/2.0/TD YEAR 85-92 2.4 TD/2.5 V6 YEAR 90-92, 90 1.8/2.0/2.0 V6 YEAR 84-87	39.65 EUR
5	BS118415	Bremsscheibe HA GTV6 2.5 (116) 75 1.8 turbo/2.5/3.0 V6 90 2.5 ie/2.4 TD	41.03 EUR
5	BS 184	REAR SPORT BRAKE DISK GTV 6, 75 Twin Spark/2.5/3.0 SLOTTED AND PERFORATED	99.00 EUR

GT/V/6 (116) > BRAKE > BRAKE PADS FRONT

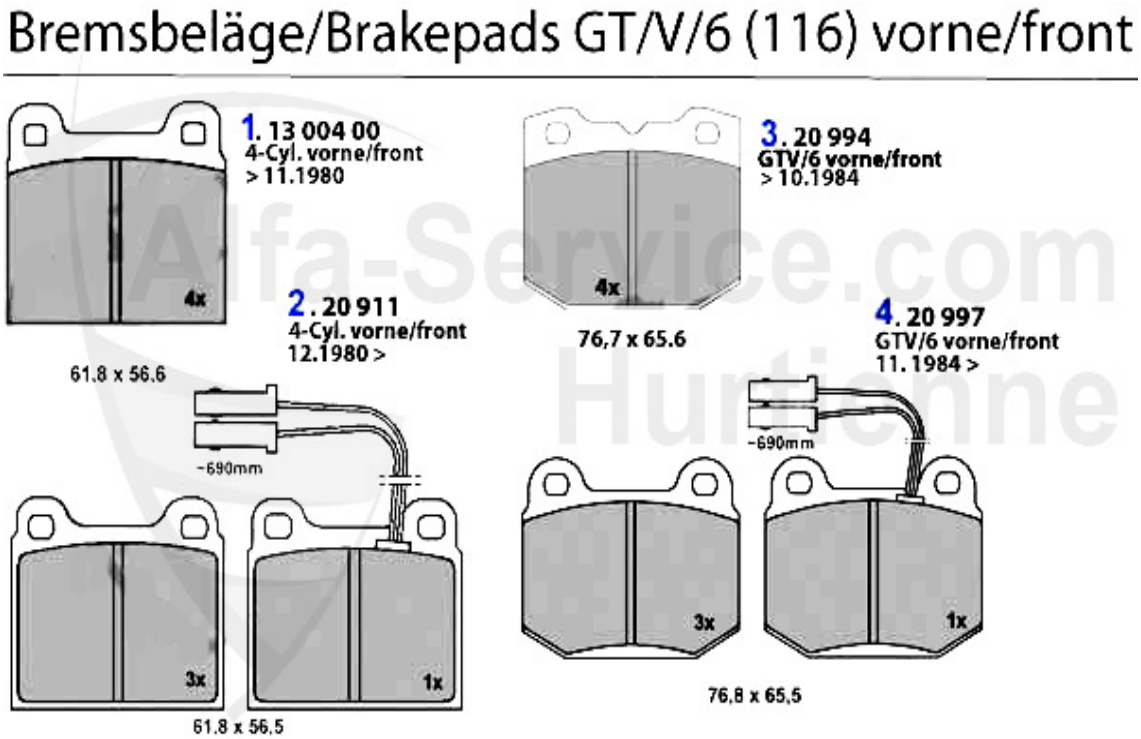

1	13 004 0 0	1300-1600 FRONT BRAKE PADS	23.18 EUR
2	20911 150 05	FRONT BRAKE PADS 116 4 CYL. 75 1.6/ 1.8 IE >09.89, ATE BRAKE SYSTEM	60.52 EUR
3	20994 165 04	SBB VA GTV 6 (116) Bremssystem: Brembo	48.99 EUR
4	20997 165 05	BRAKE PADS WITH WARNING UNIT 75 2.0/TD/ 2.5/3.0/V6 85-08.89,90 2.0 ie/2.4 TD BRAKE SYSTEM: BREMBO	69.00 EUR

GT/V/6 (116) > BRAKE > BRAKE PADS REAR

Bremsbeläge/Brakepads GT/V/6 (116) hinten/rear

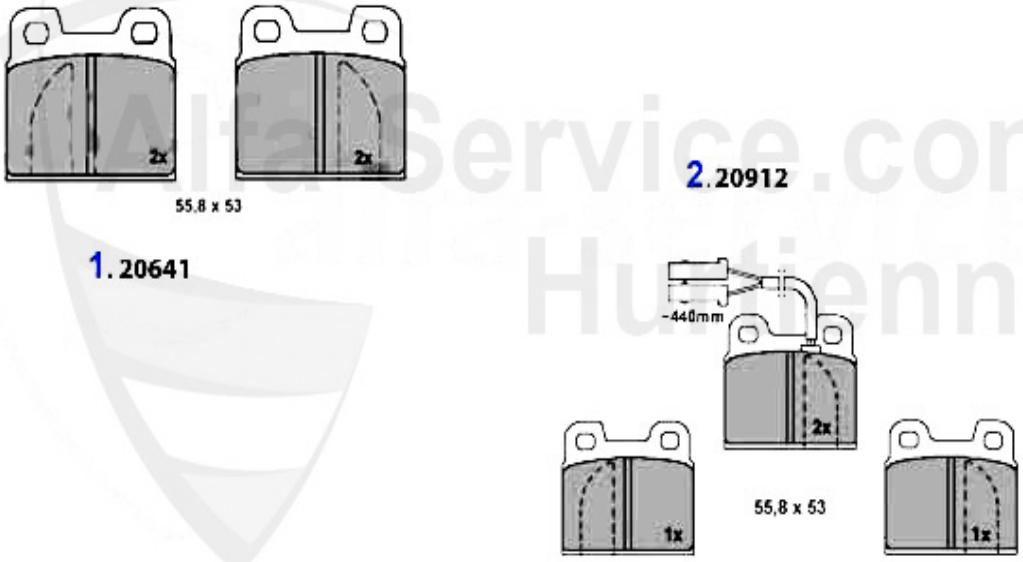

1	20641 150 04	REAR BRAKE PADS ALFETTA,GIULIETTA GT/V(116),ATE BRAKE SYSTEM	37.66 EUR
2	20912 150 05	REAR BRAKE PADS WITH WARNING UNIT 1.6/ 1.8/TURBO/2.0 BRAKE SYSTEM:ATE	70.21 EUR

GT/V/6 (116) > BRAKE > BRAKE PAD ATTACHMENT

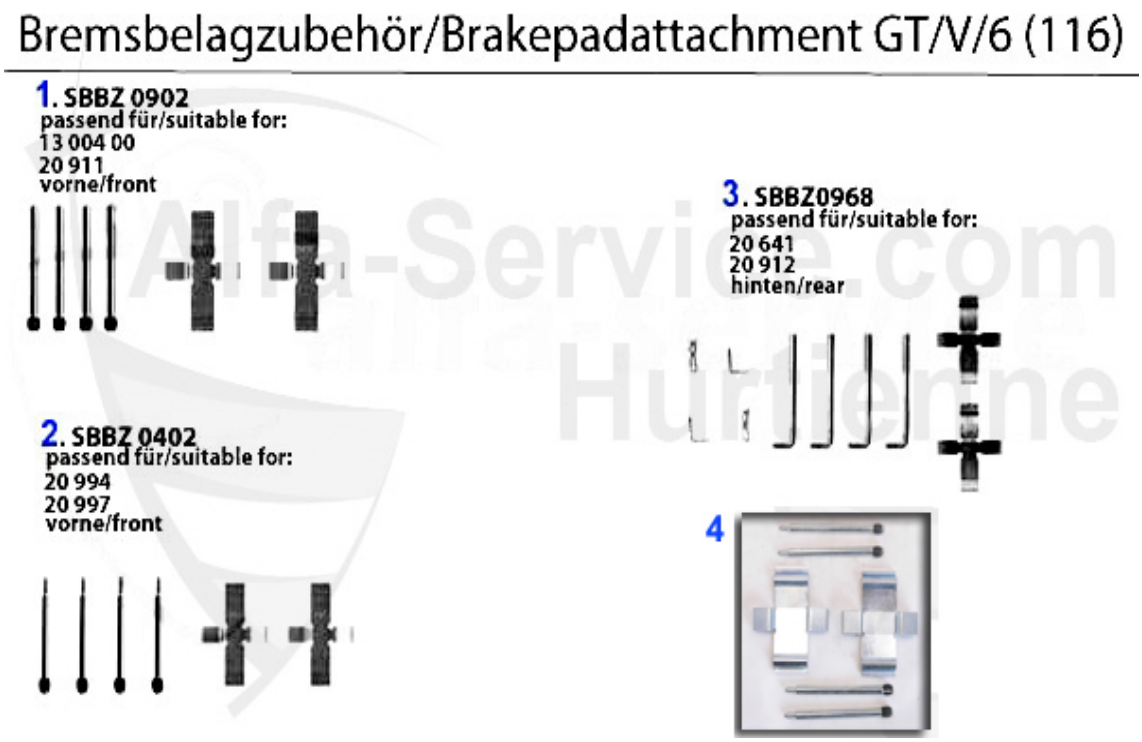

1	SBBZ0902	SBB-Zubehör für 1300400/20034 4x stift 2x kreuzfeder	8.21 EUR
2	SBBZ0402	BRAKEPADATTACHMENT f. 20323,20379,20994, 20997	11.75 EUR
3	SBBZ0968	SBB-Zubehör 116 HA f. 20641,20912	16.65 EUR
4	SBBZ6039	BRAKE PAD ATTACHMENT FOR BREMBO FOR BZ211027/BZ211028	10.95 EUR

GT/V/6 (116) > BRAKE > CALIPER

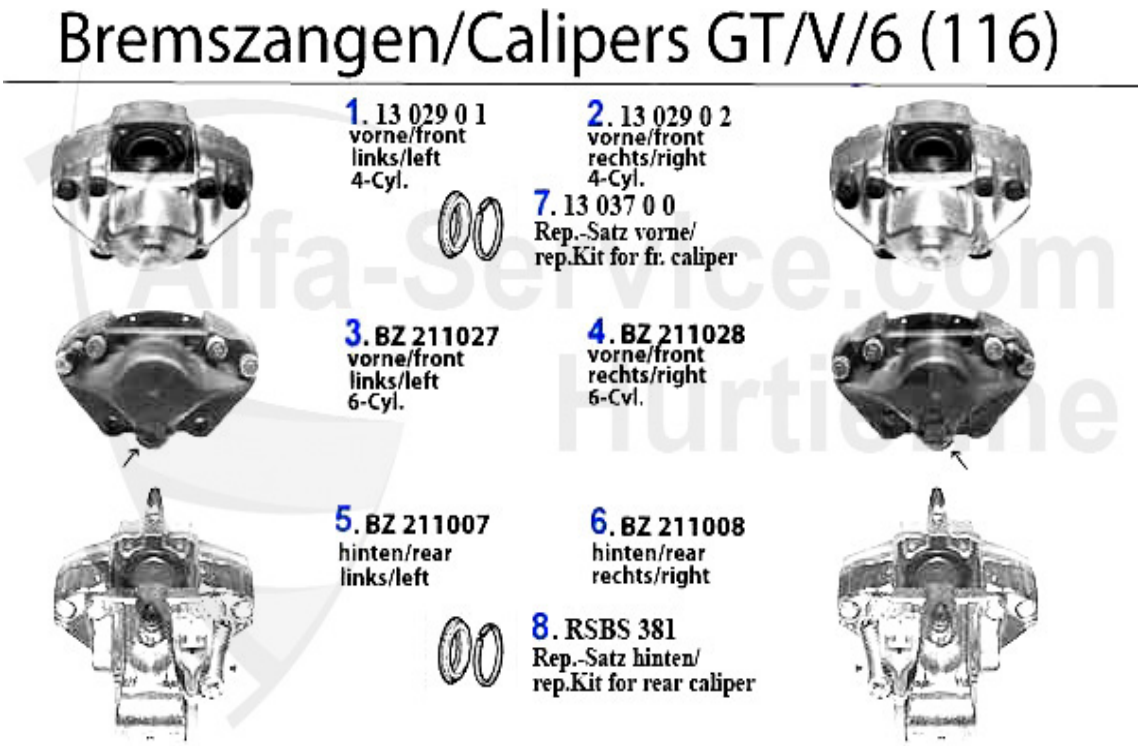

1	13 029 0 1	FRONT CALIPER 1300-1600 LEFT, ALFETTA, GUILIETTA ATE FRONT LEFT EXCHANGE PART	***
1	13 200 0 1	BRAKE CALIPER FRONT LEFT 1300-1600 (67-93) NEW PART, NO DEPOSIT!	165.01 EUR
2	13 029 0 2	FRONT CALIPER 1300-1600 RIGHT, ALFETTA, GIULIETTA ATE FRONT RIGHT EXCHANGE PART	149.00 EUR
2	13 200 0 2	BRAKE CALIPER FRONT RIGHT 1300-1600 (67-93) NEW PART, NO DEPOSIT!	165.01 EUR
3	BZ211027	OE.60719988,BRAKE CALIPPER FRONT LEFT 75 1.8 TURBO, 2.0 TS,2.5/3.0V6,90 2.5 V6 GTV/6 (116),BREMBO BRAKE SYSTEM	189.00 EUR
4	BZ211028	OE.60719986 BRAKE CALIPPER FRONT RIGHT 75 1.8 Turbo/2.0 TS 2.5/3.0 V6,90 2.5 V6 GTV/6 (116), BREMBO BRAKE SYSTEM	189.00 EUR
5	BZ222007	OE. 60760085 BRAKE CALIPPER REAR LEFT ALFETTA/GIULIETTA/GTV6 (116),75,90 ATE BRAKE SYSTEM,NEW PART!!!	175.00 EUR
5	BZ211007	OE. 60760085 BRAKE CALIPPER REAR LEFT ALFETTA/GIULIETTA/GTV6 (116),75,90 ATE BRAKE SYSTEM	204.68 EUR
6	BZ211008	OE. 60760086 BRAKE CALIPPER REAR RIGHT ALFETTA/GIULIETTA/GTV6 (116),75,90 ATE BRAKE SYSTEM	204.68 EUR
6	BZ222008	OE. 60760086 BRAKE CALIPPER REAR RIGHT ALFETTA/GIULIETTA/GTV6 (116),75,90 ATE BRAKE SYSTEM,NEW PART!!!	175.00 EUR
7	13 037 0 0	REPAIR KIT FRONT BRAKE CALIPERS SET FOR 2 CALIPERS, 48MM PISTONS DIA	20.50 EUR
8	RSBS381	REPAIR KIT f. REAR CALIPPER ATE ALFETTA, GIULIETTA, GTV/6 (116), 75,90	20.83 EUR

GT/V/6 (116) > BRAKE > BRAKE SERVO/BRAKE MASTER CYL.

BKV/Hauptbremszylinder/Brakeservo/Brake master cylinder GT/V/6 (116)

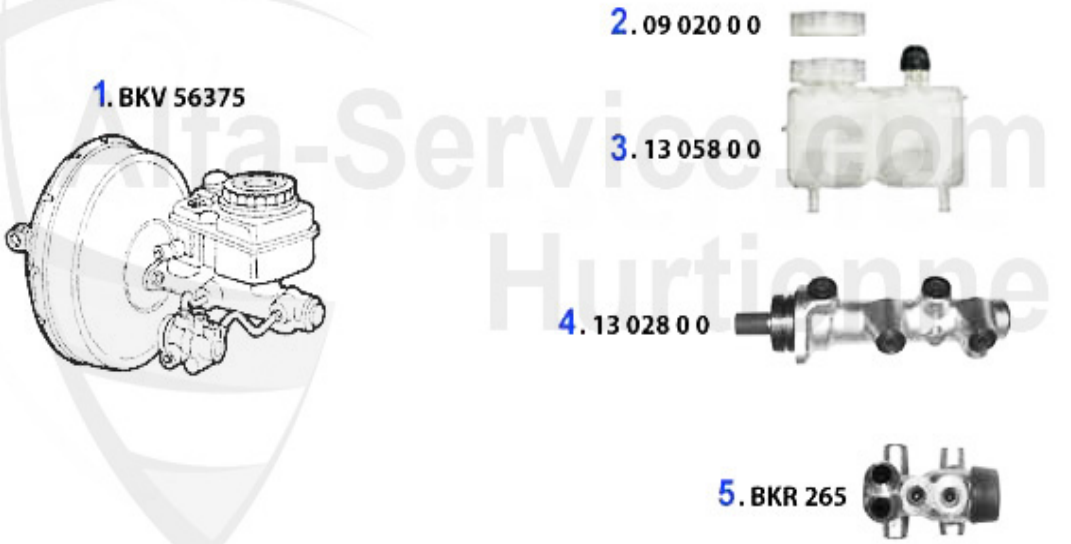

Alfa-Service.com Hurtienne

1	BKV56375	BRAKE BOOSTER 75, 116 6 CYL. ATE	***
2	09 020 0 0	COVER FOR HYDRAULIC OIL RESERVOIRE BRAKE AND CLUTCH MASTER CYLINDER	7.50 EUR
3	13 058 0 0	BRAKE FLUID RESERVOIR (late model)	85.00 EUR
4	13 028 0 0	BRAKE MASTER CYLINDER 1300-2000 hanging pedals, 116 1300-2500	120.50 EUR
5	BKR265	BRAKING GOVERNOR 75,90,GIULIETTA,GTV 2.0 (116) 84>	178.99 EUR

GT/V/6 (116) > BRAKE > BRAKE VALVE

Bremskraftregler/Brake Valve GT/V/6

1. BKR 265
am Hauptbremszylinder/
at the BRAKE MASTER CYL.

2. 13 020 0 0
an der Hinterachse/
at the REAR AXLE
System: Ate

3. BKR 055 B
an der Hinterachse/
at the REAR AXLE
System: Bendix

1	BKR265	BRAKING GOVERNOR 75,90,GIULIETTA,GTV 2.0 (116) 84>	178.99 EUR
2	13 020 0 0	BRAKE VALVE REAR AXLE	99.00 EUR
3	BKR055B	Bremskraftregler 33/SW (907) mit AB S	101.55 EUR

GT/V/6 (116) > BRAKE > BRAKE HOSES

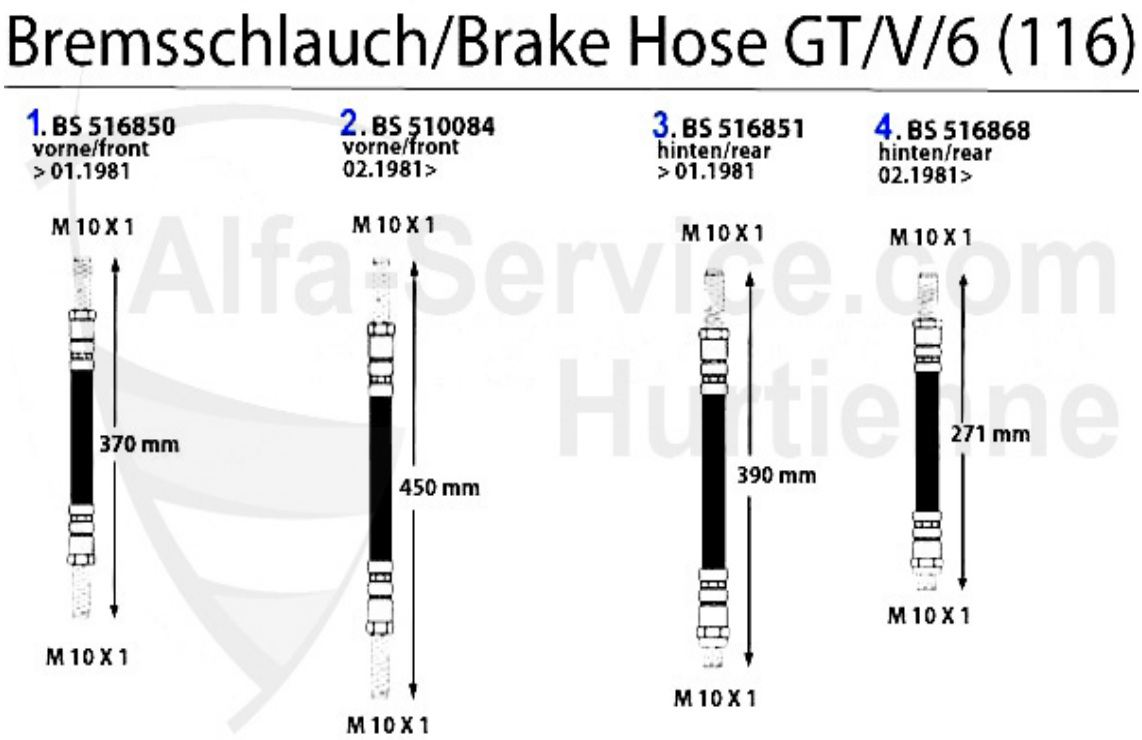

1	BS516850	OE. 60727319 BRAKEHOSE 116 4-CYL. >1983	15.28 EUR
2	BS510084	BRAKE HOSE FRONT ALFETTA 1.6/1.8/2.0/2.4 TD, GIULIETTA 1.3/1.6/1.8/TURBO YEAR 05.83>,GTV 2.0/2.5 V6 YEAR 02.81>,75,90 6,RZ,SZ ALL, 445MM LENGTH	17.74 EUR
3	BS516851	OE. 60728512 BRAKEHOSE REAR 116 >1983	16.92 EUR

GT/V/6 (116) > BRAKE > BRAKE CABLE

Handbremsseil/Brake Cable GT/V/6 (116)

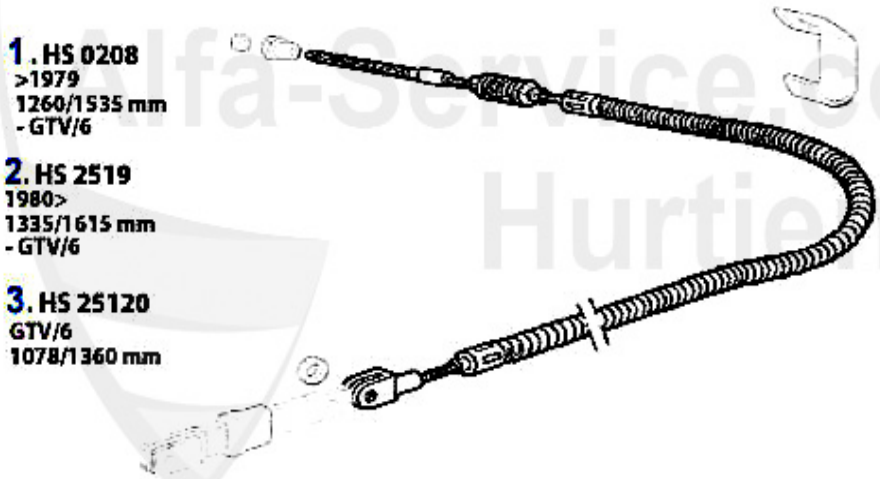

1	HS0208	OE.60521838,HANDBRAKE CABLE ALFETTA/GT YEAR >79	30.26 EUR
2	HS2519	OE. 60521838 BRAKE CABLE 116 1980>	24.62 EUR
3	HS25120	GTV 6 Handbrake cable	36.83 EUR

Federn/Springs GTV4/6 (116)

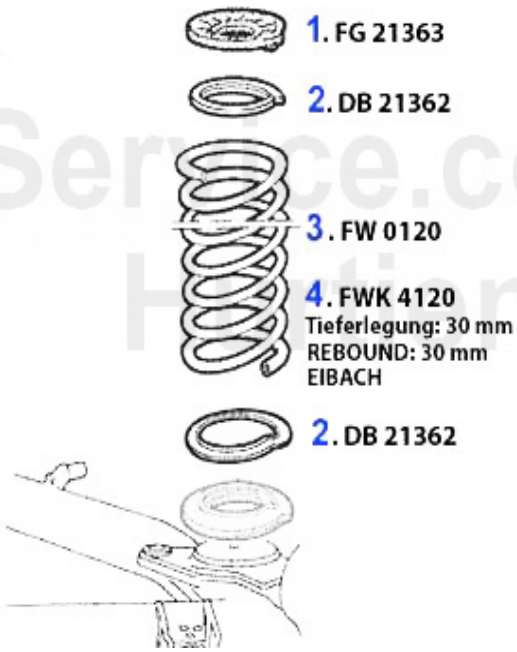

1	FG21363	OE. 60521363 SPACER REAR AXLE 116	13.49 EUR
2	DB21362	OE. 60521362 PLATE	7.90 EUR
3	FW0120	OE. 60701617 REAR SPRING ALFETTA/GTV (116),75,90 1 PIECE	79.00 EUR
4	FWK4120	REAR SPORT SPRINGS 30 MM, Eibach LOWER 75,GTV (116) 2 Pieces	132.34 EUR

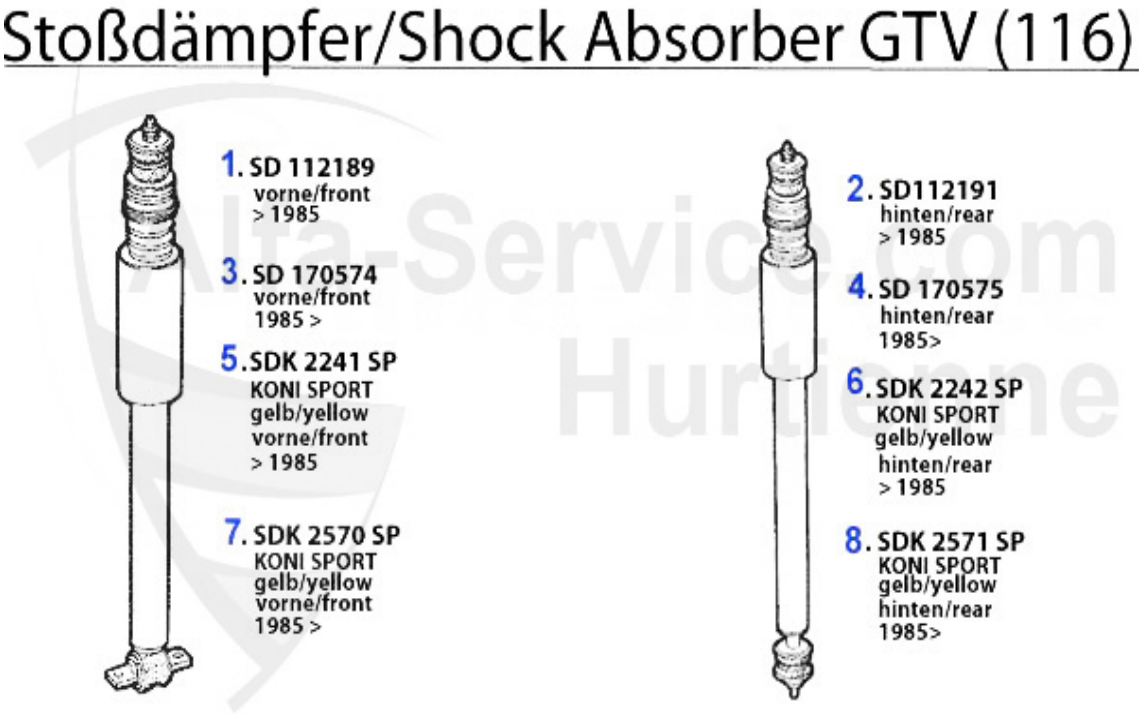

1	SD112189	Stossdämpfer vorne 6,Alfetta,Giulie tta oben Stift/unten Brücke,2-Rohr Gas	81.04 EUR
2	SD112191	REAR SHOCK ABSORBER ALFETTA,GIULIETTA, GTV (116), DOUBLE GAS EFFECT	81.04 EUR
3	SD170574	Stossdämpfer vorne 75,90,GTV/6 (11 6) Bj. 01.85>,2-Rohr Gas,oben Stift /unten Brücke	101.55 EUR
4	SD170575	OE.60533045 bilstein shock absorber rear 75,90,GTV/6 (116) year 01.85>	***
5	SDK2241SP	KONI YELLOW FRONT ALFETTA,GTV6 (116)	113.05 EUR
6	SDK2242SP	KONI YELLOW REAR ALFETTA,GTV6 (116) >84	113.05 EUR
7	SDK2570SP	KONI YELLOW FRONT 75,GTV/6 85>	107.99 EUR
8	SDK2571SP	OE. KONI "YELLOW" RA 116, 1985>	107.99 EUR

GT/V/6 (116) > SUSPENSION > ATTACHMENT FRONT

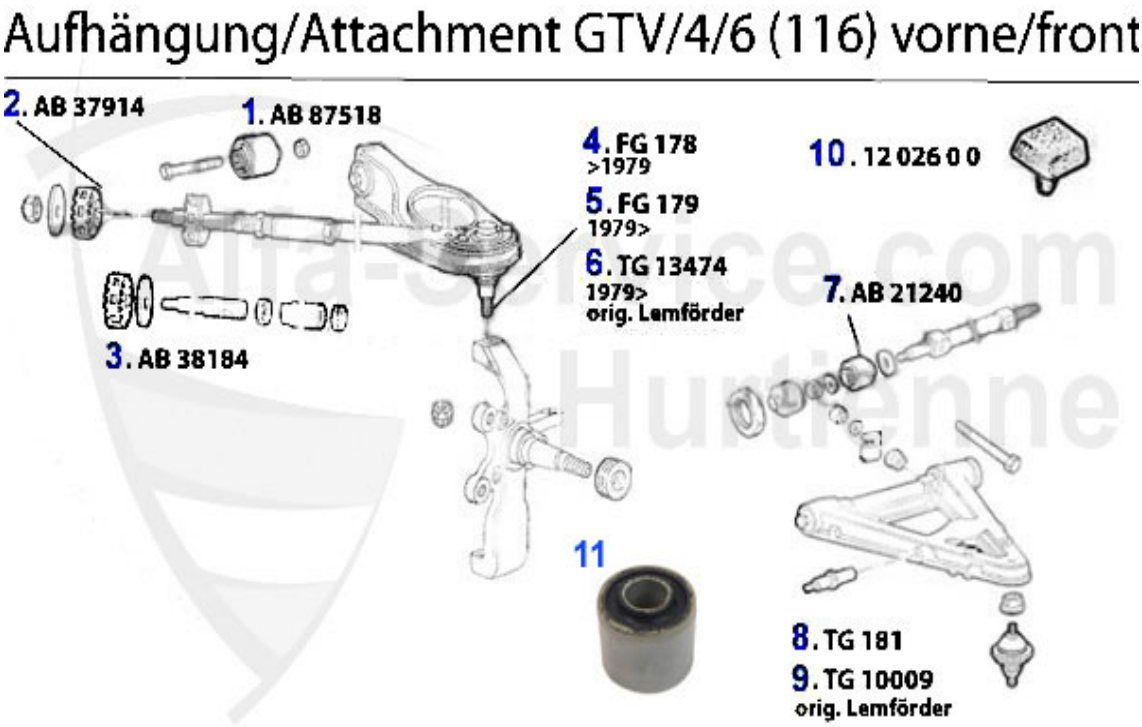

1	AB87518	OE.60521269 SUSPENSION ARM BUSH FRONT, 75,GT/V/6 (116), RZ/SZ	8.21 EUR
2	AB37914	RUBBER MOUNTING 75,GTV6 (116) pieces required:2	3.80 EUR
3	AB38184	SILENT BLOCK 75,GTV6 (116) required parts: 2	3.80 EUR
4	FG178	SUPERIOR SUPPORTING HINGE ALFETTA/ GIULIETTA/GTV (116) >79	***
5	FG179	UPPER BALL JOINT 116 f	40.01 EUR
6	TG13474	OE. 60728429 Front upper ball joint LMI	***
7	AB21240	OE. 60521240 LOWER ARM BUSH 116 FA 2 PIECES EACH SIDE NEEDED	40.01 EUR
8	TG181	LOWER BALL JOINT F. 116	40.01 EUR
9	TG10009	OE. 60521236/7 LOWER BALL JOINT LEMFÖRDER	45.65 EUR
11	AB92733	Lager für Pendelstütze VA 116 benötigte Stückzahl: 4	11.90 EUR

GT/V/6 (116) > SUSPENSION > ATTACHMENT REAR

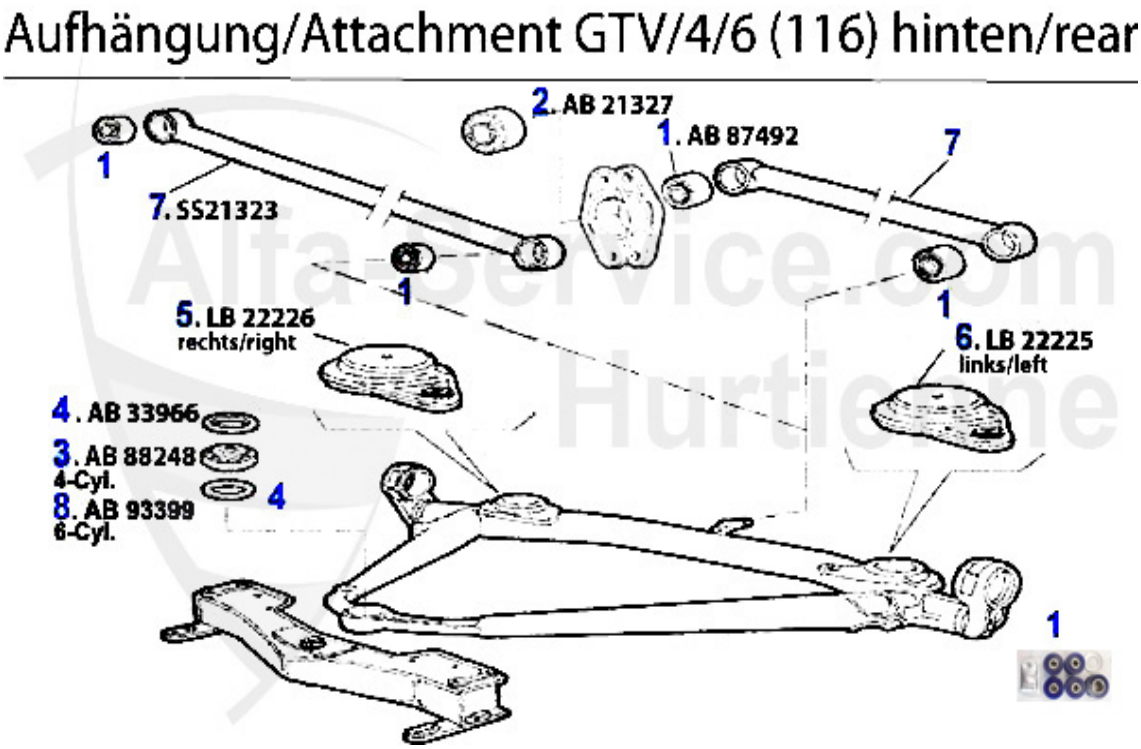

1	AB87492	CHASIS MOUNTING RUBBER REAR AXLE 75, ALFETTA,GIULIETTA,GTV6 needed pieces: 4	7.40 EUR
1	AB1970SF	SUPERFLEX BUSHES SET f. RAER TORSION BAR 116	87.00 EUR
2	AB21327	REAR AXLE BUSH MIDDLE 116	17.90 EUR
3	AB88248	Aufhängungsbuchse hinten Alfetta,Gi ulietta,GT/V (116),75 4-Zylinder	15.47 EUR
4	AB33966	OE. 60533966 RING f. PANHARD/GEAR 116	***
5	LB22226	BEARING SUPPORT REAR-AXLE-FRAME RIGHT 75,GTV/6	79.00 EUR
6	LB22225	BEARING SUPPORT REAR-AXLE- FRAME LEFT 75, GTV/6	79.00 EUR
7	SS21323	OE.60521323 TORSION BAR 116	***
8	AB93399	OE. 60533942/60703781 BUSHING 116	***

GT/V/6 (116) > SUSPENSION > FRONT STABILISER

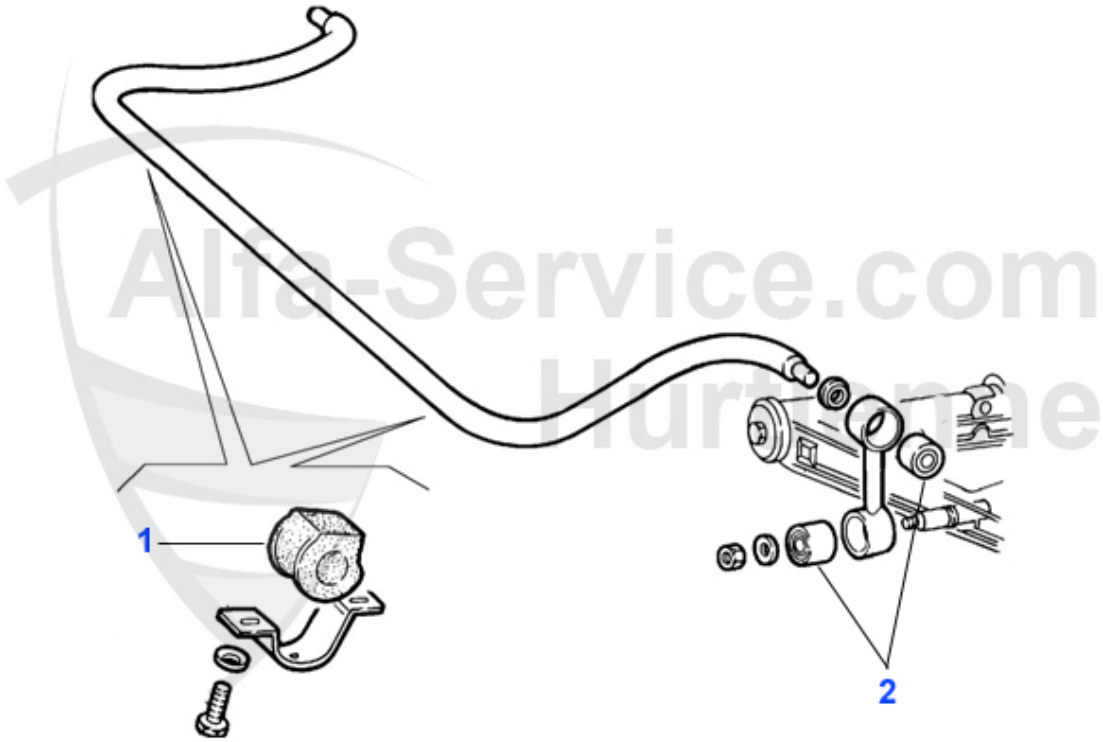

1	AB9303	Gummi f. Stabilisator VA 75 3.0 V6	16.01 EUR
1	AB21287	Stabilager vorne Alfetta,Giulietta, GTV/6 (116),75 22mm	14.90 EUR
2	AB92733	Lager für Pendelstütze VA 116 benötigte Stückzahl: 4	11.90 EUR

GT/V/6 (116) > SUSPENSION > REAR STABILISER

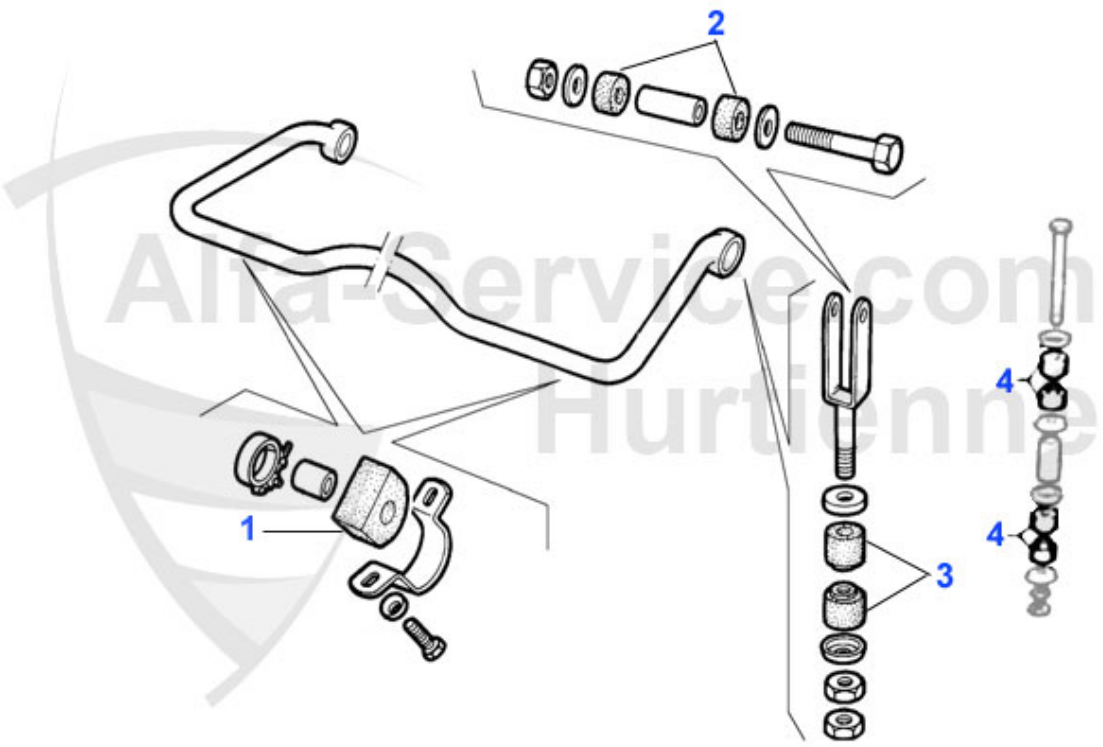

1	AB2394	REAR ANTI-ROLL BAR BEARING ALFETTA, GIULIETTA,75 (21mm) REQUIRED PIECES: 2	7.90 EUR
1	AB2395	Gummipuffer Stabilisator HA 75 1.6-1.8 ie benötigte Stückzahl: 2	***
2	AB21366	BUSHING FOR REAR UPPER ANTI-ROLL BAR ALFETTA,GIULIETTA,GTV6 (116),75,90 (PENDULUM SUPPORT 4 PCS PER SIDE)	6.06 EUR
3	AB21364	REAR CONNECTING ROD BUSHING ALFETTA, GIULIETTA,GTV6 (116),75	2.87 EUR

GT/V/6 (116) > SUSPENSION > WHEEL BEARING GTV/4

1	RL0612	WHEEL BEARING SET FRONT ALFETTA/GT (116) 1.6/1.8 YEAR >12.76	61.00 EUR
1	SIRI4830	OIL SEAL FRONT WHEEL BEARING ALFETTA, GIULIETTA,GT,GTV TYPE 116 (40/52/7mm)	9.22 EUR
2	RL0613	WHEEL BEARING SET FRONT ALFETTA/GT (116) 1.6 77-2.80,1.8/2.0/TD >2.80,GIULIETTA 1.3/1.6/1.8 >2.80	48.99 EUR
3	RL0614	WHEEL BEARING SET FRONT,75,90 ALFETTA/GIULIETTA/GT/V (116), 03.80>	46.16 EUR
4	RL1733R	WHEEL BEARING SET REAR RIGHT SIDE ALFA 6,75 05.85-09.85, 90 84-09.85 ALFETTA/GIULIETTA, GT/V/6 81-84	87.00 EUR
5	RL1733L	WHEEL BEARING SET REAR LEFT SIDE ALFA 6,75 05.85-09.85,90, 84-9.85 ALFETTA/GIULIETTA, GT/V/6 81-84	87.00 EUR

GT/V/6 (116) > SUSPENSION > WHEEL BEARING GTV/6

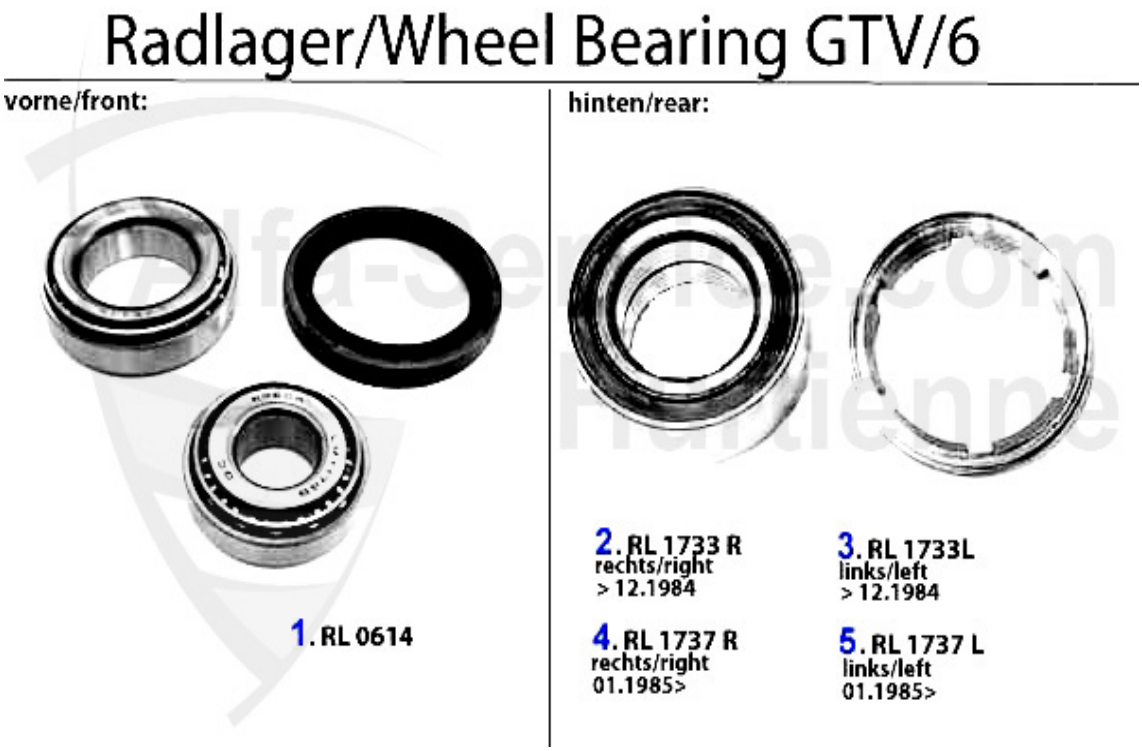

1	RL0614	WHEEL BEARING SET FRONT,75,90 ALFETTA/GIULIETTA/GT/V (116), 03.80>	46.16 EUR
2	RL1733R	WHEEL BEARING SET REAR RIGHT SIDE ALFA 6,75 05.85-09.85, 90 84-09.85 ALFETTA/GIULIETTA, GT/V/6 81-84	87.00 EUR
3	RL1733L	WHEEL BEARING SET REAR LEFT SIDE ALFA 6,75 05.85-09.85,90, 84-9.85 ALFETTA/GIULIETTA, GT/V/6 81-84	87.00 EUR
4	RL1737R	WHEEL BEARING SET REAR RIGHT SIDE 75,90, GTV/6 (116), 01.85>	71.64 EUR
5	RL1737L	WHEEL BEARING SET REAR LEFT SIDE 75,90, GTV/6 (116), 01.85>	71.64 EUR

GT/V/6 (116) > STEERING > STEERING PARTS

Lenkung/Steering GT/V/6 (116)

1	AG1300	STEERING ROD, ALFETTA,GIULIETTA (116),75,90, RIGHT-HAND THREAD	40.83 EUR
2	AG13ZF	STEERING ROD ALFETTA,GIULIETTA, GTV/6,(116),75,90,RIGHT-HAND THREAD,OE MANUFACTURER LEMFOERDER	101.04 EUR
3	SSK180	TIE ROD END ALFETTA,GIULIETTA,GTV/6 (116)75,90,RZ/SZ	32.83 EUR
4	SSK18ZF	OE: 60521320 TIE ROD END 116 Lemförder	***
5	LMS2269	STEERING SLEEVE SPICA GIULIETTA ALL, ALFETTA FROM 01/79	25.66 EUR
5	LMS2270	STEERING SLEEVE SPICA ALFETTA UNTIL YEAR 1987	25.66 EUR
9	LMS11600	STEERING BOOT SET UNIVERSAL	32.50 EUR

GT/V/6 (116) > ELECTRIC > PUSH/TOGGLE SWITCHES

1	SCH445	POWER WINDOW SWITCH GTV6	59.00 EUR

GT/V/6 (116) > ELECTRIC > FUEL TANK SENDING UNIT

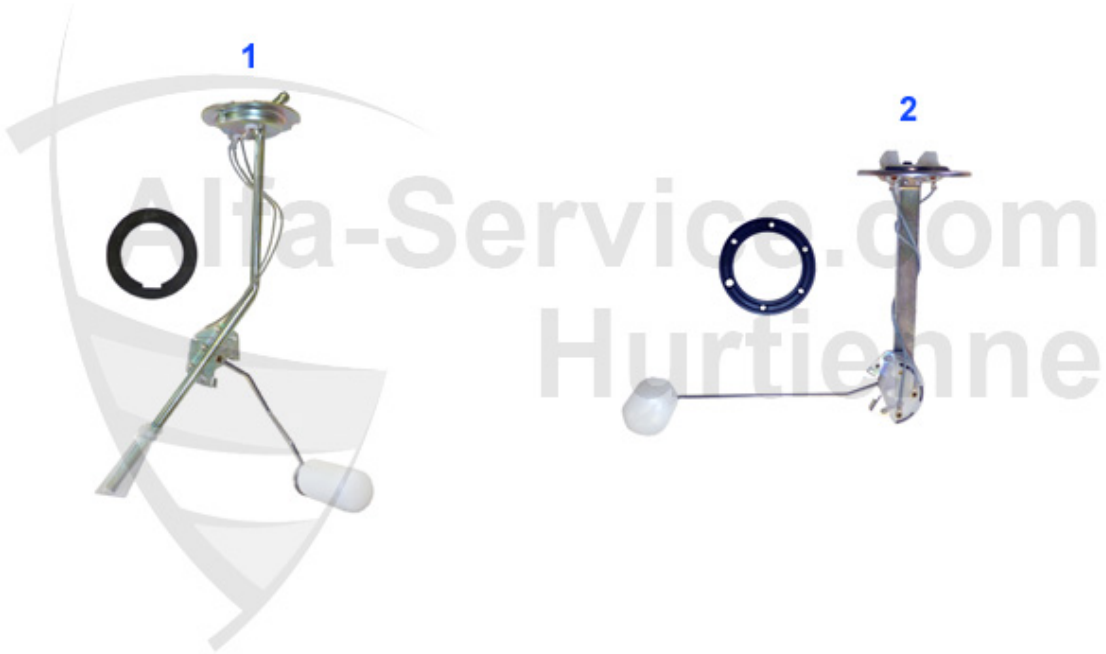

1	TG01129	OE. 116003205005 FUEL SENDING UNIT ALFETTA SALOON, GTV/4 (116)	85.00 EUR
2	TG01128	Tankgeber GT/V (116) 4+6 Zylinder	89.00 EUR

GT/V/6 (116) > ELECTRIC > ENGINE ELECTRIC > SENSORS/SWITCHES

Alfa-Service.com Hurtienne

1	14 041 0 0	MECHANICAL STOP-LAMP SWITCH 105/115 alfetta,giulietta, gtv(116), spider	10.77 EUR
2	WTG60183	COOLING TEMPERATURE SENDER UNIT 6,75 V6, ALFETTA 2.4 TD,GTV6 (116)	14.99 EUR

GT/V/6 (116) > ELECTRIC > ENGINE ELECTRIC > DISTRIBUTOR GTV/4 (116)

1	14 028 0 0	IGNITION CONTACT BOSCH-DISTRIBUTOR 68-89 sud, spider, giulia, bertone, alfetta, giulietta, gtv (116)	6.30 EUR
2	14 036 0 0	ROTOR BOSCH 64-93	8.10 EUR
3	14 032 0 0	DISTRIBUTOR CAP BOSCH 1974-93 carburetor alfetta, giulietta, giulia, spider, bertone,33,75,90, arna, sud,75, 90, 164	8.62 EUR
4	14 073 0 0	CONDENSER BOSCH beg. 1974 spider, bertone, giulia, alfetta giulietta gtv(116)	9.50 EUR
5	14 003 0 0	POINTS MARELLI alfetta, giuletta, gtv(116) 1.6	6.70 EUR
6	14 007 0 0	ROTOR MARELLI with points alfetta, gtv	11.31 EUR
7	14 081 0 0	ROTOR MARELLI - without points 75,90, alfetta, giulietta	6.88 EUR
8	14 005 0 0	DISTRIBUTOR CAP MARELLI WITH CONTACT alfetta, giulietta, gtv (116) 1.6	13.30 EUR
9	14 080 0 0	DISTRIBUTOR CAP MARELLI CONTACTLESS IGNITION	11.50 EUR

GT/V/6 (116) > ELECTRIC > ENGINE ELECTRIC > DISTRIBUTOR GTV/6 (116)

1	VL015	OE.60735860 ROTOR BOSCH SYSTEM, 6,GTV6,75,2.5 V6	8.10 EUR
2	VL087	Verteilerfinger 75,90,SZ,GTV/6 (116) 6-Zylinder	8.90 EUR
3	VL112	OE. 60735406 ROTOR BOSCH SYSTEM OVERSPEED TRIP UNIT 6300 U/min 116 6-CYL	33.00 EUR
4	VK117	OE. 60735405 DISTRIBUTOR CAP 116 6-CYL.	17.40 EUR
5	HG04288	CONTROL UNIT TRANSISTOR IGNITION 116	60.52 EUR

GT/V/6 (116) > ELECTRIC > ENGINE ELECTRIC > IGNITION PARTS GTV/4 (116)

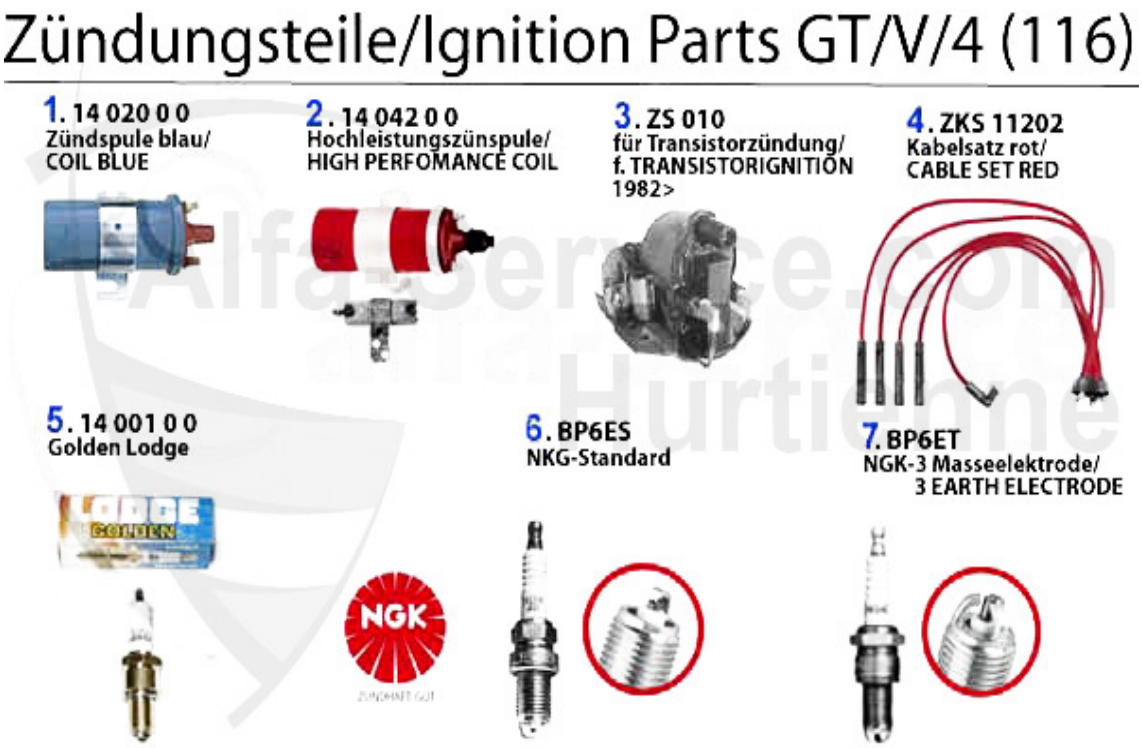

1	14 020 0 0	IGNITION COIL STANDARD	32.73 EUR
2	14 042 0 0	IGNITION COIL WITH SERIES RESISTANCE	107.50 EUR
3	ZS010	Zündspule elektronisch 33,75,90,Arn a,Sud/Sprint,Alfetta,Giulietta Bj. >86 System: Marelli	245.18 EUR
4	ZKS11202	IGNITION WIRE SET ALFETTA/GTV (116)	26.78 EUR
5	14 001 0 0	SPARK PLUG GOLDEN LODGE 2HL	***
6	BP 6 ES	SPARK PLUG NGK 33 1.3/1.4/1.7 ie 1.6/1.8/TURBO/2.0ie/3.0 V6, 90 1.8/ 90 1.8/2.0ie, 145/6 1.4/1.6IE ALFETTA GT/V(116)1.8/2.0 SUD/SPRINT 1.2/1.3/1.5 TI,ARNA 1.2/1.3/TI,SPIDER(115)1.6/2.0 79>,166 2.0 V6 TURBO	2.67 EUR
7	BP 6 ET	Zündkerze NGK m. 3 Masseelektroden 155 2.0 16V Turbo,105er alle Typen anstelle 2 HL	5.80 EUR

Zündungsteile/Ignition Parts GTV/6 (116)

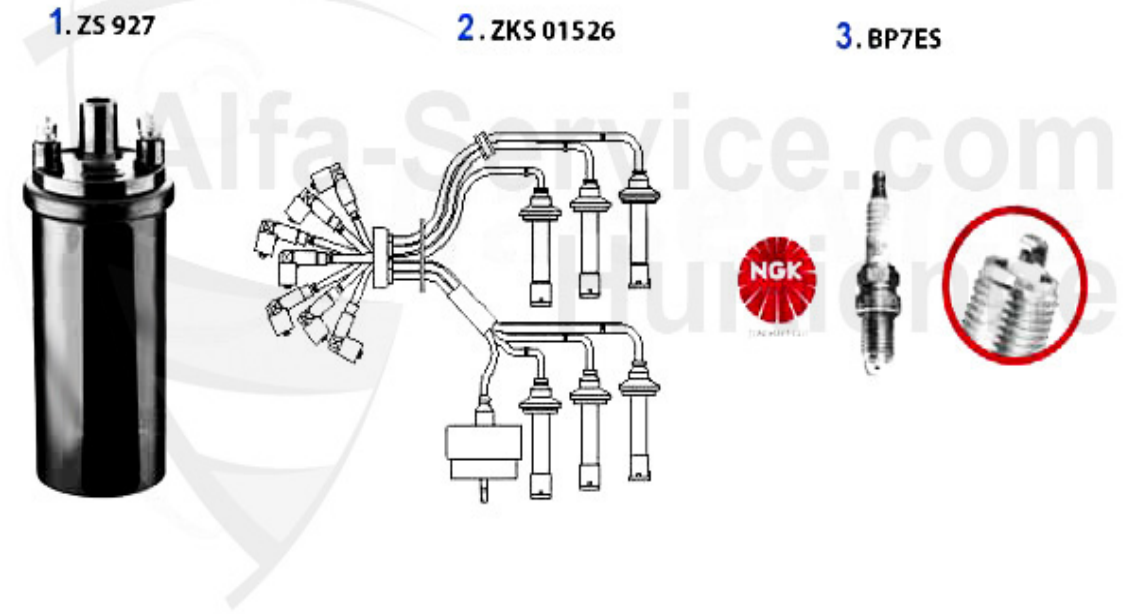

1	ZS927	OE. 60703927 COIL GTV/6 (116)	99.00 EUR
2	ZKS01526	CABLES 75 V6,GTV/6 (116)	173.37 EUR
3	BP 7 ES	Zündkerze NGK 6 2.0/2.5 ie,75 2.5 V 6,90 2.5 V6,164 Super 2.0 TS/V6 Turbo,GTV/6 (116),gtv/spider (916) 2.0 V6 Turbo	3.39 EUR

GT/V/6 (116) > ELECTRIC > ENGINE ELECTRIC > AGGREGATS

1	14 017 0 0	STARTER, 9 TEETHS GIULIA,SPIDER,GT, GIULIETTA,ALFETTA,75,90	171.32 EUR
2	AN10680	STARTER ALFETTA,GIULIETTA,GTV (116) 2.0	193.89 EUR
3	AN14960	STARTER 75/90/GIULIETTA/GTV (116) 2.0, SPIDER (115) 2.0 1986-90	204.14 EUR
4	AN10790	STARTER 75,90,GTV (116),RZ/SZ 6 CIL. & TURBO	204.14 EUR
5	14 018 0 0	GENERATOR 45A - external controller alfetta, giulietta, GTV (116), giulia, spider, bertone	173.37 EUR
5	14 043 0 0	Generator 45A external controller Alfetta,Giulietta,GTV(116),Giulia,Spider Bertone	173.37 EUR
6	14 077 0 0	GENERATOR 55A 75,90, alfetta, giulietta, GTV (116), spider (115), 105 er EXCHANGE PART-PLEDGE EUR 43,10	183.12 EUR
7	14 070 0 0	VOLTAGE REGULATOR FOR 45A GENERATOR	34.06 EUR

GT/V/6 (116) > WIPERS > WIPERS

1	WM46138	Wischermotor 6,Alfetta,Giulietta,GT V/6 (116)	159.00 EUR
2	WWB28878	OE. 60728878 WIPER CONTAINER 116 GTV/6	***
3	WB311	WIPER BLADE KIT GTV6 45cm BLACK WITH HOOK FASTENERS WITHOUT SPOILER	19.90 EUR
4	WR57104	Wischer-Relais 75,RZ,SZ,GTV/6	26.57 EUR

GT/V/6 (116) > INTERIOR > DASH PANEL

1	RSA0001	DASHBOARD REPAIR KIT GTV6 and GTV4 ALFETTA GT	149.00 EUR

GT/V/6 (116) > INTERIOR > Sunroof Tan Vinyl

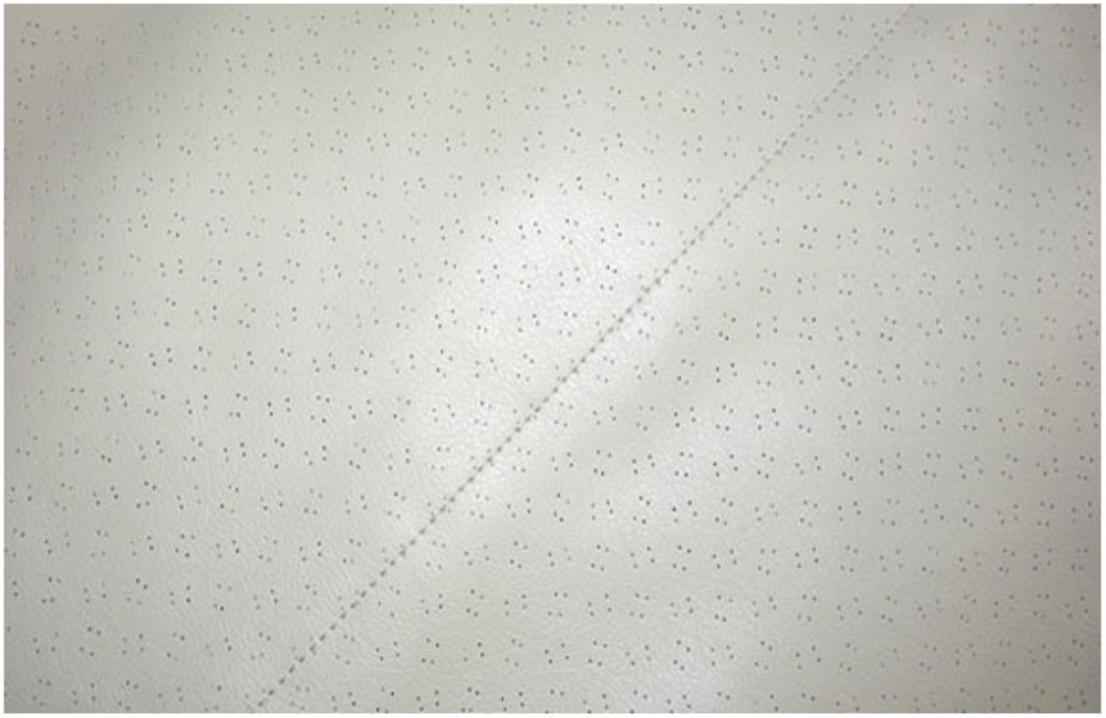

1	DH 1164	ALFETTA HEADLINER GT/GTV6 WITHOUT SUNROOF, TAN VINYL	189.00 EUR

GT/V/6 (116) > INTERIOR > CAR MAT

1	FMS 116	FLOOR MATS GTV6/ALFETTA LIM. (116),BLACK WITH RED LOGO	61.04 EUR

GT/V/6 (116) > INTERIOR > handbrake lever cover

1	HBS116B	HANDBRAKE LEVER BOOT, ALFETTA GT GTV6 BLACK LEATHER	48.00 EUR

GT/V/6 (116) > INTERIOR > gear lever cover

1

1	SHS116C	GEAR LEVER BOOT ALFETTA GT/GTV6,BLACK LEATHER	55.00 EUR

GT/V/6 (116) > LITERATURE

1	26 409 0 0	ALFA ROMEO MANUAL,274 PAGES WITH 250 PICTURES	39.95 EUR