GMC Sierra 2005 fuse box diagram

Instrument Panel Fuse Block

The fuse block access door is on the driver's side edge of the instrument panel.

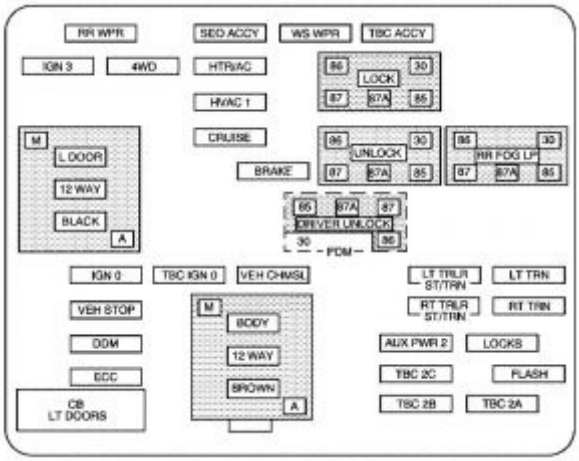

GMC Sierra mk1 – fuse box – instrument panel

Fuses	Usage
RR WPR	Not Used
SEO ACCY	Special Equipment Option Accessory
WS WPR	Windshield Wipers
TBC ACCY	Truck Body Controller Accessory
IGN 3	Ignition, Heated Seats
4WD	Four-Wheel Drive System, Auxiliary Battery
HTR A/C	Climate Control System
LOCK (Relay)	Power Door Lock Relay (Lock Function)
HVAC 1	Climate Control System
L DOOR	Driver's Door Harness Connection
CRUISE	Cruise Control, Power Take Off (PTO)
UNLOCK (Relay)	Power Door Lock Relay (Unlock Function)
RR FOG LP	Not Used
BRAKE	Anti-Lock Brake System
DRIVER UNLOCK	Power Door Lock Relay (Driver's Door Unlock Function)
IGN 0	TCM
TBC IGN 0	Truck Body Controller
VEH CHMSL	Vehicle and Trailer High Mounted Stoplamp
LT TRLR ST/TRN	Left Turn Signal/Stop Trailer
LT TRN	Left Turn Signals and Sidemarkers
VEH STOP	Vehicle Stoplamps, Brake Module, Electronic Throttle Control Module

RT TRLR ST/TRN	Right Turn Signal/Stop Trailer
RT TRN	Right Turn Signals and Sidemarkers
BODY	Harness Connector
DDM	Driver Door Module
AUX PWR 2	Not Used
LOCKS	Power Door Lock System
ECC	Not Used
TBC 2C	Truck Body Controller
FLASH	Flasher Module
CB LT DOORS	Left Power Windows Circuit Breaker
TBC 2B	Truck Body Controller
TBC 2A	Truck Body Controller

Center Instrument Panel Fuse Block

The center instrument panel utility block is located underneath the instrument panel, to the left of the steering column.

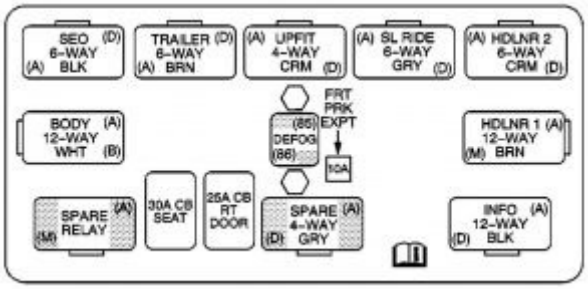

GMC Sierra mk1 – fuse box – center instrument panel

Device	Usage
SEO	Special Equipment Option
TRAILER	Trailer Brake Wiring
UPFIT	Upfitter (Not Used)
SL RIDE	Ride Control Harness Connection
HDLR 2	Headliner Wiring Connector
BODY	Body Wiring Connector
DEFOG	Rear Defogger Relay
HDLNR 1	Headliner Wiring Connector 1
SPARE RELAY	Not Used
CB SEAT	Driver and Passenger Seat Module Circuit Breaker
CB RT DOOR	Right Power Windows Circuit Breaker
SPARE	Not Used
INFO	Infotainment Harness Connection

Underhood Fuse Block

The underhood fuse block in the engine compartment on the driver's side of the vehicle near the battery.

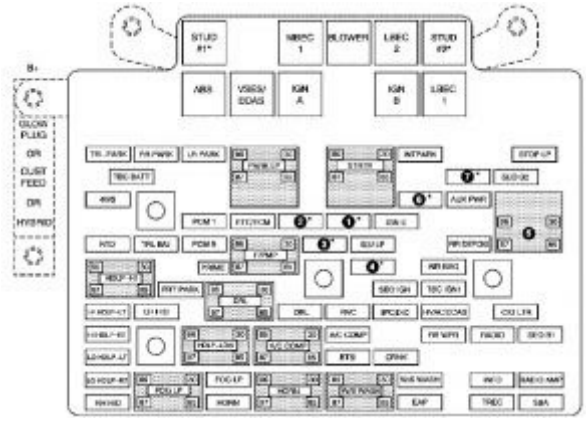

GMC Sierra mk1 – fuse box – engine compartment

GAS		
1	INJ 2	15A
2	INJ 1	15A
3	02A	15A
4	02B	15A
5	ING 1	
DIESEL		
1	EDU	25A
2	ECMRPV	15A
3	FUEL HT	15A
4	ECM	15A
5	EDU	
EXCEPT H2		
6	RR HVAC	30A
7	S/ROOF	25A
H2		
6	S/ROOF	30A
7		

*1 — Gasoline Engine and Diesel Engine.
*2 — Gasoline Engine; ECMRPV — Diesel Engine.
*3 — Gasoline Engine; FUEL HT — Diesel Engine.
*4 — Gasoline Engine; ECM I — Diesel Engine.
*5 — IGN/EDU

Fuses	Usage

GLOW PLUG	Diesel Glow Plugs and Intake Air Heater
CUST FEED	Gasoline Accessory Power
STUD #1	Auxiliary Power (Single Battery and Diesels Only)/ Dual Battery (TP2) Do not install fuse.
MBEC	Mid Bussed Electrical Center Power Feed, Front Seats, Right Doors
BLOWER	Front Climate Control Fan
LBEC	Left Bussed Electrical Center, Door Modules, Door Locks, Auxiliary Power Outlet—Rear Cargo Area and Instrument Panel
STUD 2	Accessory Power/Trailer Wiring Brake Feed
ABS	Anti-Lock Brakes
VSES/ECAS	Vehicle Stability
IGN A	Ignition Power
IGN B	Ignition Power
LBEC 1	Left Bussed Electrical Center, Left Doors, Truck Body Controller, Flasher Module
TRL PARK	Parking Lamps Trailer Wiring
RR PARK	Right Rear Parking and Sidemarker Lamps
LR PARK	Left Rear Parking and Sidemarker Lamps
PARK LP	Parking Lamps Relay
STARTER	Starter Relay
INTPARK	Interior Lamps
STOP LP	Stoplamps
TBC BATT	Truck Body Controller Battery Feed
S/ROOF	Sunroof
SEO B2	Off-Road Lamps
4WS	Vent Solenoid Canister/Quadrasteer Module Power
RR HVAC	Not Used
AUX PWR	Auxiliary Power Outlet — Console
IGN 1	Ignition Relay
PCM 1	Powertrain Control Module
ETC/ECM	Electronic Throttle Control, Electronic Brake Controller
IGN E	Instrument Panel Cluster, Air Conditioning Relay, Turn Signal/Hazard Switch, Starter Relay
RTD	Ride Control
TRL B/U	Backup Lamps Trailer Wiring

PCM B	Powertrain Control Module, Fuel Pump
F/PMP	Fuel Pump (Relay)
B/U LP	Back-up Lamps, Automatic Transmission Shift Lock Control System
RR DEFOG	Rear Window Defogger
HDLP-HI	Headlamp High Beam Relay
PRIME	Not Used
02B	Oxygen Sensors
AIRBAG	Supplemental Inflatable Restraint System
FRT PARK	Front Parking Lamps, Sidemarker Lamps
DRL	Daytime Running Lamps (Relay)
SEO IGN	Rear Defog Relay
TBC IGN1	Truck Body Controller Ignition
HI HDLP-LT	High Beam Headlamp-Left
LH HID	Not Used
DRL	Daytime Running Lamps
RVC	Regulated Voltage Control
IPC/DIC	Instrument Panel Cluster/Driver Information Center
HVAC/ECAS	Climate Control Controller
CIG LTR	Cigarette Lighter
HI HDLP-RT	High Beam Headlamp-Right
HDLP-LOW	Headlamp Low Beam Relay
A/C COMP	Air Conditioning Compressor
A/C COMP	Air Conditioning Compressor Relay
RR WPR	Not Used
RADIO	Audio System
SEO B1	Mid Bussed Electrical Center, Rear Heated Seats, HomeLink
LO HDLP-LT	Headlamp Low Beam-Left
BTSI	Brake Transmission Shift Interlock System
CRANK	Starting System
LO HDLP-RT	Headlamp Low Beam-Right
FOG LP	Fog Lamp Relay
FOG LP	Fog Lamps
HORN	Horn Relay
W/S WASH	Windshield Washer Pump Relay
W/S WASH	Windshield Washer Pump

INFO	OnStar/Rear Seat Entertainment
RADIO AMP	Radio Amplifier
RH HID	Not Used
HORN	Horn
EAP	Not Used
TREC	All-Wheel Drive Module
SBA	Supplemental Brake Assist

Auxiliary Electric Cooling Fan Fuse Block

The auxiliary electric cooling fan fuse block is located in the engine compartment on the driver's side of the vehicle next to the underhood fuse block.

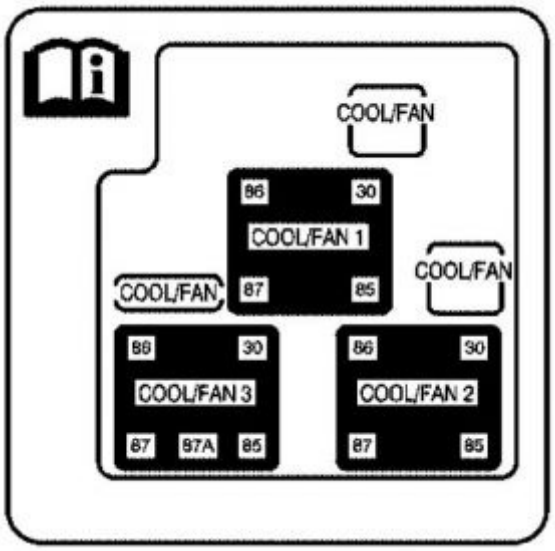

GMC Sierra mk1 – fuse box – auxiliary box

Fuses	Usage
COOL/FAN	Cooling Fan
COOL/FAN	Cooling Fan Relay Fuse
COOL/FAN	Cooling Fan Fuse

Relays	Usage
COOL/FAN 1	Cooling Fan Relay 1
COOL/FAN 3	Cooling Fan Relay 3
COOL/FAN 2	Cooling Fan Relay 2