Workshop Manual

Citigo 2012 ➤ , Fabia 2000 ➤ ,
Fabia II 2007 ➤ , Fabia II 2009 ➤ ,
Fabia II 2011 ➤ , Fabia III 2015 ➤ ,
Octavia 1997 ➤ , Octavia II 2004 ➤ ,
Octavia II 2010 ➤ , Octavia III 2013 ➤ ,
Octavia III 2014 ➤ , Rapid 2011 ➤ ,
Rapid NH 2013 ➤ , Roomster 2006 ➤ ,
Superb 2002 ➤ , Superb II 2008 ➤ ,
Yeti 2010 ➤ , Yeti 2011 ➤

Air conditioning system with refrigerant R134a

Edition 10.2014

List of Workshop Manual Repair GroupsList of Workshop Manual Repair GroupsList of Workshop Manual Repair Groups

Repair Group

00 - Technical data

Contents

00 - Technical data . . . 1
1 General notes on the air conditioning system . . . 1
1.1 Important instructions . . . 1
1.2 Further documentation and information means . . . 2
1.3 Principles of the air-conditioning technology . . . 2
1.4 Advantages of the air conditioning system - comfort . . . 4
1.5 Operation of the air conditioning system . . . 4
1.6 Refrigerant R134a . . . 5
1.7 Vapour pressure table for refrigerant R134a . . . 6
1.8 Properties of refrigerant R134a . . . 7
1.9 Evidence of leaks . . . 8
1.10 Refrigerant oil . . . 9
1.11 General occupational safety . . . 9
1.12 Using pressure tank . . . 11
1.13 Safety precautions when working with extraction and filling systems . . . 12
1.14 Safety measures when working on vehicles with air conditioning system and when using refrigerant R 134a . . . 13
1.15 Basics for working on the refrigerant circuit . . . 14
2 General instructions for refrigerant circuit . . . 16
2.1 Components of the refrigerant circuit . . . 16
2.2 Extractor, filler and measurement valves for quick couplings of the AC service station on the refrigerant circuit . . . 22
2.3 Pressures and temperatures in the refrigerant circuit and its arrangement . . . 24
2.4 Switch and sender on the refrigerant circuit . . . 28
2.5 Electrical components which are not fitted on the refrigerant circuit . . . 29
2.6 The inspection and measurement work can be performed using the pressure gauge . . . 30
2.7 Air conditioning service and recycling equipment . . . 31
2.8 Repair and maintenance instructions for refrigerant circuit . . . 31
3 Legal texts and legal regulations . . . 33
3.1 Laws and regulations . . . 33
3.2 Verification procedure of refrigerant . . . 34
4 Refrigerant circuit . . . 35
4.1 Important repair instructions for air conditioning systems . . . 35
5 Working with the A/C service station . . . 36
5.1 Important instructions for working with the A/C Service station . . . 37
5.2 Connecting the A/C service station to the refrigerant circuit for measuring and testing . . . 38
5.3 Empty the refrigerant circuit with the A/C service station. . . . 38
5.4 Evacuate the refrigerant circuit with the A/C service station. . . . 39
5.5 Fill the refrigerant circuit with the A/C service station. . . . 40
5.6 Operate the air conditioning system after filling . . . 40
5.7 Fill refrigerant into the reservoir (filling cylinder or reservoir bottle) of the A/C service station . . . 40
5.8 Draining the A/C service station . . . 41
6 Leak detection on the refrigerant circuit . . . 42
6.1 Looking for leaks in the refrigerant circuit - important instructions . . . 42
6.2 Leak detection on the refrigerant circuit with compressed air or nitrogen . . . 43
6.3 Detecting leaks on the refrigerant circuit with the leak detector VAG1796 . . . 45
6.4 Detecting leaks on the refrigerant circuit with the leak detector VAS 6196 or VAS 6201A . . . 45
7 Removing contaminants from the refrigerant circuit . . . 52
7.1 Cleaning the refrigerant circuit with compressed air and nitrogen . . . 52
7.2 Cleaning refrigerant circuit with refrigerant R134a (flush) . . . 54
7.3 Principle circuit diagrams for different rinsing cycles . . . 58

7.4 Adapter for setting up the rinsing cycles . . . 61
8 Complaints . . . 66
8.1 Possible complaints . . . 66
8.2 Temperature test of cooling capacity . . . 67
8.3 Odour from the heating and air conditioning unit . . . 68
9 Check the pressure in the refrigerant circuit (with the A/C service station) . . . 71
9.1 Test requirements before the pressure test . . . 71
9.2 Check pressures . . . 72
9.3 Continuation of the test depending on the arrangement of the refrigerant circuit . . . 74
9.4 Pressure test for vehicles with throttle and catch pan (with AC compressor regulated from the inside) . . . 74
9.5 Pressure test for vehicles with expansion valve and fluid reservoir (with AC compressor regulated from the inside) . . . 78
9.6 Pressure test for vehicles with expansion valve, fluid reservoir and with regulating valve for compressor of air conditioning system N280 (with AC compressor regulated from the outside) . . . 83
10 Replace components of the refrigerant circuit . . . 91
10.1 Replace parts on the refrigerant circuit - General instructions . . . 91
10.2 Components of the refrigerant circuit leaking or damaged - the refrigerant circuit is absolutely empty . . . 92
10.3 Components of the refrigerant circuit leaking or damaged - refrigerant is still in the refrigerant circuit . . . 93
10.4 Replace AC compressor . . . 93
10.5 Replace catch pan and throttle/fluid reservoir . . . 94
11 Tools and materials, which are available from the importer . . . 96
11.1 Setting up tools and materials which are available from the importer . . . 96
11.2 A/C service station . . . 97
11.3 Flushing device for the refrigerant circuits 6337/1 or follow-up models (manufacturer Behr) . . . 98
11.4 Flushing device for the refrigerant circuits 6336/1 or follow-up models (manufacturer Waeco) . . . 98
11.5 Leak detector V.A.G 1796 . . . 98
11.6 Leak detection system VAS 6196 . . . 98
11.7 Leak detection system VAS 6201A . . . 99
11.8 Adapter case of motor car set VAS 6338/1 . . . 99
11.9 Case of release tools VAS 6127/3 . . . 99
11.10 Socket insert T10364 . . . 99
12 Tools and materials, which are commercially available . . . 100
12.1 Setting up tools and materials which are available from a dealer . . . 100
12.2 Filling hoses . . . 101
12.3 Bottle connecting piece for pressure bottle . . . 101
12.4 Valve caps with replacement gaskets . . . 101
12.5 Pressure gauge with pressure reducer for nitrogen . . . 102
12.6 Quick-coupling adapter for service connections . . . 102
12.7 Tools, which you make yourself . . . 102

00 – Technical data

1 General notes on the air conditioning system

(SRL000755; Edition 10.2014)

⇒ “1.1 Important instructions”, page 1

⇒ “1.2 Further documentation and information means”, page 2

⇒ “1.3 Principles of the air-conditioning technology”, page 2

⇒ “1.4 Advantages of the air conditioning system - comfort”, page 4

⇒ “1.5 Operation of the air conditioning system”, page 4

⇒ “1.6 Refrigerant R134a”, page 5

⇒ “1.7 Vapour pressure table for refrigerant R134a”, page 6

⇒ “1.8 Properties of refrigerant R134a”, page 7

⇒ “1.9 Evidence of leaks”, page 8

⇒ “1.10 Refrigerant oil”, page 9

⇒ “1.11 General occupational safety”, page 9

⇒ “1.12 Using pressure tank”, page 11

⇒ “1.13 Safety precautions when working with extraction and filling systems”, page 12

⇒ “1.14 Safety measures when working on vehicles with air conditioning system and when using refrigerant R 134a”, page 13

⇒ “1.15 Basics for working on the refrigerant circuit ”, page 14

1.1 Important instructions

This workshop manual provides basic knowledge to foremen and mechanics, in order to carry out professional work on air conditioning systems for vehicles.

In order to carry out professional work on air conditioning systems for vehicles, you must have worked through the content of this Workshop Manual or completed a training course on the air conditioning system including general knowledge (possibly with a corresponding final test) and you must be able to implement these elements in practice.

Only these workers are recognised as qualified to pursue the activities on air conditioning systems for vehicles.

Note

- *This workshop manual can also serve as training documentation.*
- *This Workshop Manual should be kept at the work place and it must be submitted at the request of the responsible supervisory authority, if required.*
- *Alternative or additional regulations may be valid in certain countries.*

Caution

Non-approved tools or materials (e.g. stop leak additive) can cause damage/deterioration to the system.

Only tools and materials approved by the manufacturer may be used.

There is no guarantee if non-approved tools or materials were used.

1.2 Further documentation and information means

- Workshop manual for type related repair work ⇒ Heating, Air Conditioning; Rep. gr. 87
- ⇒ Current flow diagrams, Electrical fault finding and Fitting locations
- Self-study programmes, e.g. ⇒ Self-study programme No. 10 ; air conditioning system in the vehicle or ⇒ Self-study programme No. 25 ; Octavia - Climatronic
- Video programmes for occupational training
- ⇒ Electronic Catalogue of Original Parts
- ⇒ Catalogue of factory equipment and special tools

1.3 Principles of the air-conditioning technology

⇒ “1.3.1 Physical principles”, page 2

⇒ “1.3.2 Heat always flows from a warmer substance to a colder substance”, page 3

⇒ “1.3.3 Pressure and boiling point”, page 3

1.3.1 Physical principles

The four known aggregate phases of water also exist for the refrigerants of the air conditioning system.

1 - gaseous (not visible)

2 - vaporous

3 - liquid

4 - solid

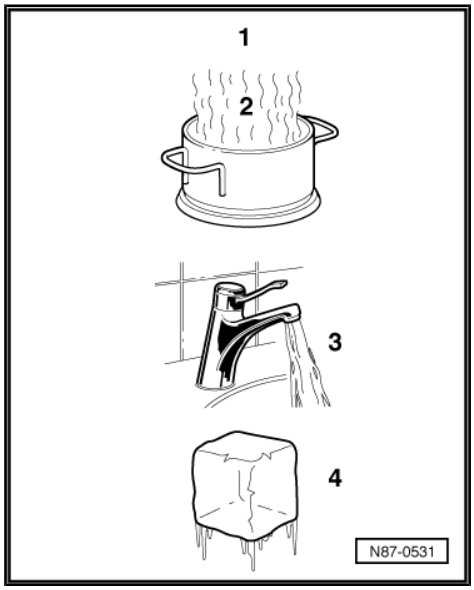

If water is heated in a container (heat absorption) rising water vapour is visible. If the vapour is heated even more through heat absorption, the visible vapour becomes invisible gas. The procedure is reversible. If the heat content is extracted from the gaseous water, this results first of all in vapour, from this the vapour turns into water and then into ice.

A - Heat absorption

B - Heat dissipation

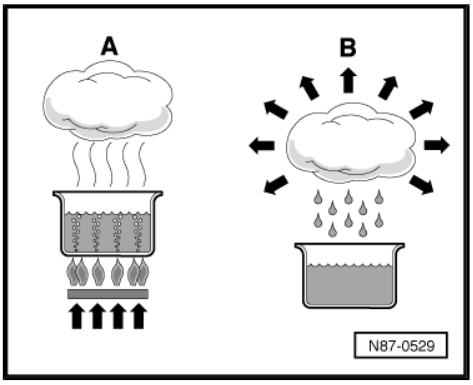

1.3.2 Heat always flows from a warmer substance to a colder substance

Each substance consists of a mass of moving molecules. The fast moving molecules of a warmer substance give up a part of their energy to the molecules which are slower and have less heat. This slows down the molecular movement of the warmer substance and the molecular movement of the colder substance is accelerated. This happens until the molecules of both substances move with the same speed. Then they have the same temperature and no further heat exchange takes place.

1.3.3 Pressure and boiling point

The boiling point of a liquid given in the tables always refers to the atmospheric pressure of 1 bar. If the pressure of a liquid changes, so does its boiling point.

It is known, for example, that water boils at lower temperatures the lower the pressure.

Based on the vapour pressure curves for water and refrigerant R134a it can be recognised, for example, that while maintaining pressure, by lowering the temperature, the vapour turns to liquid (in the condenser), or that, for example, by reducing the pressure, the refrigerant turns from the liquid state into the vapour state (evaporator).

Vapour pressure curve of water

A - liquid

B - gaseous

C - Vapour pressure curve of water

1 - Pressure of the liquid in bar (absolutely)

2 - Temperature in °C

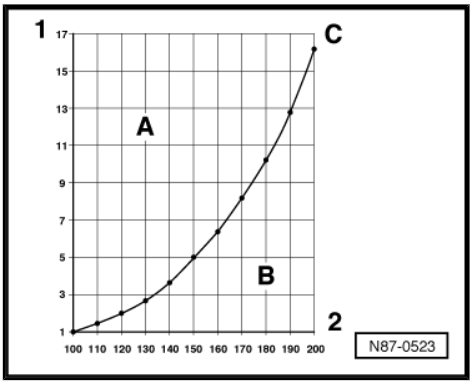

Vapour pressure curve of refrigerant R134a

A - liquid

B - gaseous

D - Vapour pressure curve of refrigerant R134a

1 - Pressure of the liquid in bar (absolutely)

2 - Temperature in °C

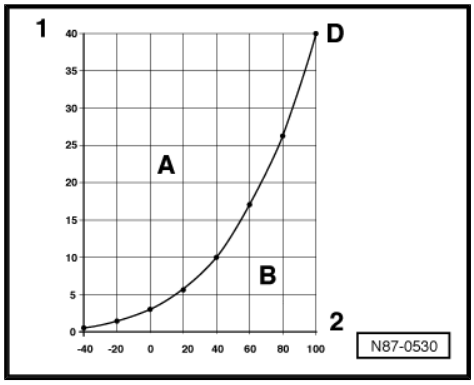

1.4 Advantages of the air conditioning system - comfort

One of the basic requirements for a concentrated and safe driving is the feeling of comfort in the vehicle interior. This comfort is only possible through the use of an air conditioning system, especially in warm temperatures and at high humidity. Of course, opening the windows, sunroof or allowing a greater flow of air through the vehicle can contribute to well-being of occupants, but this also has disadvantages in the vehicle interior, e.g.: additional noise, draughts. exhaust fumes, unfiltered entry of pollen (unpleasant for persons with allergies).

Through a controlled air conditioning system, in combination with a well-designed heating and ventilation system, the feeling of well-being and comfort can be achieved by controlling the indoor temperature, humidity and air movement, according to the external conditions. This is possible when the vehicle is stationary as well as when driving.

Further important advantages of the air conditioning system are:

- The cleaning of the air injected into the interior (by the wet fins of the evaporator, for example, dust and pollen are washed out and evacuated with the condensation water).

Temperatures in a mid-range car, e.g.: after a short period driving, an outdoor temperature of 30 °C in the shade and the vehicle under direct sunlight:

	with air conditioning system	without air conditioning system
Head room	23 °C	42 °C
Chest	24 °C	40 °C
Footwell	30 °C	35 °C

1.5 Operation of the air conditioning system

The temperature in the passenger compartment is influenced by radiant heat through the window and by the contact heat emitted by metallic parts. In order to provide agreeable temperatures for the passengers on very hot days, some of the ambient heat must be evacuated.

As it is a well known fact that heat spreads towards colder temperatures, an aggregate that generates lower temperatures has been fitted to the vehicle, i.e. the evaporator. Liquid refrigerant is continuously evaporated in this aggregate. The heat required for this operation is drawn from the air flowing through the evaporator.

The refrigerant gas together with the absorbed heat is pumped out of the evaporator by the AC compressor. The AC compressor's compression work increases the heat content and the tem-

perature of the refrigerant. It is now considerably higher than the ambient air temperature.

The high-temperature refrigerant and its heat content flow to the condenser. There, because of the temperature difference between the refrigerant and the ambient air, the refrigerant releases heat into the ambient air via the condenser and liquefies.

The refrigerant is also a heat conveyor. As it will be re-used, it is again pumped to the evaporator.

For this reason, the basic principle of all air conditioning systems is a circuit for refrigerants. Differences arise in the composition of the aggregates.

1.6 Refrigerant R134a

⇒ “1.6.1 Physical data of the refrigerant R134a”, page 5

⇒ “1.6.2 Trade names and designations of the refrigerant R134a”, page 5

⇒ “1.6.3 Critical point”, page 6

⇒ “1.6.4 Environmental aspects of the refrigerant R134a”, page 6

1.6.1 Physical data of the refrigerant R134a

The evaporation and condensation process is the procedure used for all air conditioning systems in vehicles. Thus it works with a lightly boiling substance, which is described as a refrigerant.

The refrigerant used is Tetrafluorethan R134a, which boils at -26.5°C under a pressure of 1 bar.

Chemical formula	CH2F-CF3 or CF3-CH2F
Chemical designation	Tetrafluorethan
Boiling point at 1 bar	-26.5°C
Solidification point	-101.6°C
Critical temperature	100.6°C
Critical pressure	39.56 bar (absolutely)

1.6.2 Trade names and designations of the refrigerant R134a

The refrigerant R134a is currently available under the following trade names:

- H-FKW 134a
- SUVA 134a
- KLEA 134a

Note

- *In other countries, other trade names may also be common.*
- *Among the wide range of different refrigerants, only this refrigerant should be used for automobiles. The designation “Frigen” or “Freon” are trade names. They also apply to refrigerants that are not intended to be used for automobiles.*

1.6.3 Critical point

The critical point (critical temperature and critical pressure) means that there is no divide over the same interface between the surface of the liquid and the gas.

A substance is always gaseous when it is above its critical point.

At temperatures below the critical point, all types of refrigerants in pressure tanks have a liquid and a gas phase, which means that a gas blanket is present above the liquid.

As long as gas is still present in the tank aside from liquid, the pressure depends upon the ambient temperature
⇒ “1.7 Vapour pressure table for refrigerant R134a”, page 6 .

1.6.4 Environmental aspects of the refrigerant R134a

- R134a is a fluorinated hydrocarbon (PFC) and contains no chlorine.
- R134a has a lower atmospheric lifetime than the refrigerant R12.
- R134a does not attack the ozone layer.
- The contribution of R134a to the greenhouse effect is by a factor of 10 less than the effect of the refrigerant R12.

1.7 Vapour pressure table for refrigerant R134a

The vapour pressure table is decisive for each refrigerant used in the literature for refrigeration technicians. From this table can be read which vapour pressure above the liquid column in the vessel pushes when the temperature of the reservoir is known.

As for any refrigerant a characteristic vapour pressure table is known, knowledge of the refrigerant concerned can be obtained by pressure and temperature measurement.

Temperature in °C	Pressure in bar (overpressure) R134a
-45	-0.61
-40	-0.49
-35	-0.34
-30	-0.16
-25	0.06
-20	0.32
-15	0.63
-10	1.00
-5	1.43
0	1.92
5	2.49
10	3.13
15	3.90
20	4.70
25	5.63
30	6.70
35	7.83
40	9.10

Temperature in °C	Pressure in bar (overpressure) R134a
45	10.54
50	12.11
55	13.83
60	15.72
65	17.79
70	20.05
75	22.52
80	25.21
85	28.14
90	31.34

1.8 Properties of refrigerant R134a

⇒ “1.8.1 Colour”, page 7

⇒ “1.8.2 Vapour pressure”, page 7

⇒ “1.8.3 Air displacement as a result of gaseous refrigerant”, page 7

⇒ “1.8.4 Behaviour with metals”, page 7

⇒ “1.8.5 Behaviour with plastics”, page 8

⇒ “1.8.6 Critical temperature/critical pressure”, page 8

⇒ “1.8.7 Water content”, page 8

⇒ “1.8.8 Flammability”, page 8

⇒ “1.8.9 Filling factor”, page 8

1.8.1 Colour

As vapour and liquid, the refrigerant is as colourless as water, and as gas it is invisible. Only the boundary layer between gas and liquid is visible (fluid level in the standpipe of the filling cylinder or bubbles in an inspection glass). In an inspection glass, the liquid of the refrigerant R134a may appear coloured (milky). This opacity arises from a partially dissolved refrigerant oil and does not indicate an error.

1.8.2 Vapour pressure

In a fully filled and closed reservoir, the vapour refrigerant that evaporates on the surface is of the same volume which again liquifies when the vapour particles fuse. This balanced status is created under pressure and is frequently called vapour pressure. The vapour pressure is temperature dependent
⇒ “1.7 Vapour pressure table for refrigerant R134a”, page 6

1.8.3 Air displacement as a result of gaseous refrigerant

Refrigerant gas is heavier than air and therefore disperses along the floor. It gathers in depressions where it displaces the available air.

1.8.4 Behaviour with metals

In pure condition the refrigerant R134a is chemically stable and does not corrode iron and aluminium. Contaminations of the refrigerant, e.g. with chlorine compounds, may result in certain

metals and plastics being corroded. This may lead to choking, leaks or other deposits on the AC compressor piston.

1.8.5 Behaviour with plastics

Refrigerant is a solvent for certain plastics. These dissolved plastics may be eliminated during cooling in the expansion valve. This may result in blockage of the valve. Therefore only use original spare parts!

1.8.6 Critical temperature/critical pressure

Up to a gas pressure of 3.95 MPa (39.5 bar) overpressure (this corresponds to a temperature of 101°C) refrigerant R134a remains chemically stable, above this temperature the refrigerant decomposes see ⇒ “1.8.8 Flammability”, page 8 .

1.8.7 Water content

Water is only soluble in very small quantities in the liquid refrigerant. As opposed to this refrigerant vapour and water vapour mix in any proportion.

Water possibly present in the system is conveyed through the refrigerant circuit as drops, once the dessicator in the fluid reservoir has become saturated. The function of the dessicator is no longer guaranteed. This water flows to the nozzle of the expansion valve where it turns to ice. This reduces the efficiency of the cooling system.

Note

Water destroys the air conditioning system, as acids are produced under high pressures and temperatures in combination with other contaminations.

1.8.8 Flammability

Refrigerant is non-flammable. On the contrary it has a fire-retardant or fire extinguishing effect. Refrigerant decomposes when brought into contact with flames or red-hot surfaces. UV light also splits the refrigerant (generated during electrical welding). This results in toxic fission products (hydrogen fluoride and traces of carbonyl fluoride and fluorine), which give adequate advance warning as they irritate the mucous membranes.

1.8.9 Filling factor

The reservoir must also include vapour space in addition to the fluid space. As the temperature rises the fluid expands. The space filled with vapour becomes smaller. At a given moment there will only be fluid left in the reservoir. After this, only a minor temperature increase is required to generate very high pressures in the reservoir as the fluid can no longer expand because there is no more space. The resulting forces are great enough to burst the reservoir. In order to ensure a reservoir is not over-filled, the pressure gas regulations stipulate how many kilos of refrigerant may be filled per litre of inside volume of the reservoir. This “filling factor” multiplied by the inside volume indicates the authorised filling content. For the refrigerant R134a, it is 1.15°kg/l.

1.9 Evidence of leaks

The refrigerant circuit may start leaking because of external damage. Because of the small amount of leaked refrigerant, evidence of minor leaks can be detected for example with an electronic leak detector or leak detection additive which is filled into the refriger-

ant circuit. Leaks with less than 5 grams of refrigerant loss per year can be detected with the electronic leak detector.

For the different refrigerants, leak detectors are used which are designed for the composition of the relevant refrigerant. For example, leak detectors for refrigerant R12 are not suitable for R134a, the refrigerant R134a has no chlorine atoms, this is why these leak detectors do not respond.

1.10 Refrigerant oil

Refrigerant oil mixes (about 20 - 40 %, depending on the refrigerant AC compressor type and refrigerant volume) with the refrigerant, constantly circulates in the circuit and lubricates the moving parts.

In combination with R134a air conditioning systems, special synthetic refrigerant oil, such as poly-alkyl-glycol (PAG) oil, is used. This is necessary because, for example, mineral oil does not mix with R134a. In addition, the materials of the R134a air conditioning system are attacked if the mixture under pressure and high temperatures flows through the refrigerant circuit or the lubricating film in the AC compressor tears. The use of non-approved oils results in the failure of the air conditioning system, therefore, only approved oils may be filled in, see ⇒ Electronic Catalogue of Original Parts .

Oil type for R134a in automobiles: PAG

Note

- *Do not store refrigerant oil when it is open, because it is very hygroscopic (water retentive).*
- *Always keep the oil reservoir closed.*
- *Do not use any used refrigerant oil. Because of its chemical properties, refrigerant oil must not be disposed of with engine oil or gearbox oil. Dispose of as used oil of unknown origin (see waste, Environmental Protection, EU Regulation on refrigerants 2037/2000).*

⇒ “1.10.1 Properties of the refrigerant oil”, page 9

1.10.1 Properties of the refrigerant oil

The main properties have high dissolving power with refrigerant, good lubricating properties, acid-free and very low in water content.

The poly-alkylene-glycol (PAG) oils which are suitable for the refrigerant R134a are strongly hygroscopic (water retentive) and cannot be mixed with other oils. Therefore, to ensure protection against penetrating humidity immediately close opened cans. Refrigerant oil is contaminated by humidity and acids; it becomes dark, viscous and corrodes metals.

1.11 General occupational safety

- Under current regulations and laws as well as in compliance with the regulations of the Workers' Association.
- Observe occupational safety and job-related operating instructions ⇒ Environmental Protection, Article 17 EU Regulation 2037/2000 . These must be hung out at the work place for refrigerant.

⇒ “1.11.1 Product features”, page 10
⇒ “1.11.2 Using refrigerant R 134a”, page 10
⇒ “1.11.3 Wear safety goggles”, page 10
⇒ “1.11.4 Wear protective gloves and apron”, page 10
⇒ “1.11.5 Do not breath in refrigerant vapours”, page 11
⇒ “1.11.6 Smoking ban”, page 11
⇒ “1.11.7 Welding and soldering”, page 11
⇒ “1.11.8 Pungent odour”, page 11
⇒ “1.11.9 First Aid”, page 11

1.11.1 Product features

Refrigerant which is used in the air conditioning systems for vehicles, belongs to the new generation of refrigerants which is based on chlorine-free hydrofluorocarbon (HFC, R134a).

In regards to their physical behavior, this relates to under pressure liquefied refrigerant. They are subject to the pressure tank regulation and must only be filled into approved and marked pressure gas tanks.

For safe and proper use, certain conditions which apply must be respected.

1.11.2 Using refrigerant R 134a

WARNING

There is a risk through icing.

The refrigerant can leak as fluid or as vapour.

Do not open the reservoir in which the refrigerant is.

If the refrigerant reservoirs are opened, the contents can leak as fluid or as vapour. This procedure is more intense the higher the pressure is inside the reservoir.

How high the pressure is depends on two conditions:

- What type of refrigerant is filled in the reservoir. The rule is: The lower the boiling point, the higher the pressure.
- How high the temperature is. The rule is: The higher the temperature, the higher the pressure.

1.11.3 Wear safety goggles

Wear safety goggles. It prevents that refrigerant gets into the eyes and possibly severe damage caused by frostbite.

1.11.4 Wear protective gloves and apron

Refrigerants dissolve fats and oils pretty well. When in contact with the skin, therefore remove the protective fat film. However, degreased skin is sensitive to cold and disease germs.

Do not spill liquid refrigerant onto the skin. The heat to vapourise extracts the refrigerant from the surrounding area. Thus, very low temperatures can be achieved. This results in local frostbites (boiling point of R134a ambient pressure at -26.5°C).

1.11.5 Do not breath in refrigerant vapours

Note

In higher concentrations, escaping refrigerant vapours mix with the surrounding air and replace the atmospheric oxygen necessary to breathe.

1.11.6 Smoking ban

Refrigerants may decompose in cigarette ash. The resulting substances are toxic and should not be inhaled.

1.11.7 Welding and soldering

Note

Damaged or leaky components of the air conditioning system must not be repaired by welding or soldering, however they must be replaced.

Before welding and soldering on vehicles (in the vicinity of components of the air conditioning system) the refrigerant must be drained off and the residues must be removed by blowing through with compressed air and nitrogen.

The products of decomposition resulting from the refrigerant through the effect of the heat are not only toxic, but are also highly corrosive, so that pipes and components can be attacked. It is essentially hydrogen fluoride.

1.11.8 Pungent odour

If the smell is pungent, then the mentioned products of decomposition have already formed. It must be avoided by all means to breathe in these substances, otherwise damage to the respiratory tract, lungs and other organs, could be the consequence.

1.11.9 First Aid

- On contact with eyes or mucous membranes, immediately rinse extensively with running water and seek the attention of an ophthalmologist.
- In case of contact with the skin, immediately remove contaminated clothing and rinse the skin with plenty of water.
- During inhalation of refrigerant vapours at a higher concentration, bring those affected immediately to fresh air. Request a physician. In case of respiratory disorder, give oxygen. If the person concerned breathes only limitedly or not at all, tilt the head backwards and give artificial respiration.

1.12 Using pressure tank

Secure bottles which are standing against falling, secure bottles which are lying down against rolling away!

Do not throw the reservoir!

- When the reservoirs fall, they can become severely deformed causing them to tear open. The refrigerant evaporates abruptly, thus releasing considerable forces. Bottle parts which go flying can cause serious injuries.

- If improperly transported, the bottle valve can break off. To protect the bottle valves, the bottles may only be transported with the protective cap screwed on.

Do not place near radiators!

- Increased temperatures can occur next to the radiators. Higher temperatures also mean higher pressures, whereby the permissible pressure for the reservoir can be exceeded.

Do not heat above 50°C

- In order to exclude a danger, the “pressure tank regulation” stipulates that the reservoirs must not be heated above 50°C.
- Under no circumstances heat on an open flame. Through the local overheating, structural changes can occur in the reservoir material which reduce the pressure load of the reservoir. Moreover, there is the danger of refrigerant decomposition by local overheating.

Seal empty reservoirs

- In any case, empty refrigerant reservoirs must be sealed to prevent any humidity from penetrating. Humidity leads to corrosion of reservoirs made of steel. This weakens the wall of the reservoir. In addition, the rust particles which get into the refrigeration plants from the reservoirs cause malfunctions.

1.13 Safety precautions when working with extraction and filling systems

Caution

Operating instructions must be part of each extraction and filling system, where the work procedure, the safety instructions as well as the regulations are listed.

Prior to working with the extraction and filling system, acquaint yourself with the safety instructions as well as the regulations contained in the operating instructions and comply with them.

The operating instructions must always be readily available to the staff, foremen and monitoring bodies.

1.14 Safety measures when working on vehicles with air conditioning system and when using refrigerant R 134a

WARNING

It is recommended to hold an eye bath flask within reach. If liquid refrigerant gets into the eyes rinse the eyes out with water for approximately 15 minutes.

Subsequently apply eye drops and immediately contact a physician, even if the eyes are not painful. The physician must be informed that the frostbites were caused by refrigerant R134a.

The physician must be informed that the frostbites were caused by refrigerant R134a. If in spite of these safety measures refrigerant comes into contact with other body parts, rinse immediately with water for at least 15 minutes.

If in spite of these safety measures refrigerant comes into contact with other body parts, rinse immediately with water for at least 15 minutes.

Work on the air conditioning refrigerant circuit must only be carried out in well-ventilated areas. Existing workshop suction systems must be switched on.

Refrigerant must not be stored in lower areas (e.g. cellars) or related exits or window openings.

During paint repairs, the temperature of the objects placed in the drying oven or in its pre-heating zone must not exceed max. 80 °C (because heating causes a strong overpressure in the system that may result in the opening of the pressure relief valve).

Welding and soldering see *⇒ "1.11.7 Welding and soldering", page 11* *.*

Never fill the containers completely with liquid refrigerant. With sufficient expansion space (gas blanket) the container will burst as the temperature rises with catastrophic consequences *⇒ "1.8 Properties of refrigerant R134a", page 7* *.*

Refrigerant containers (e.g. filling cylinders at the A/C Service position) must never be heated considerably or be exposed to direct sunlight see *⇒ "1.12 Using pressure tank", page 11* *.*

Under no circumstances should refrigerant be filled into systems and reservoirs in which there is air (evacuate systems and reservoirs before filling with refrigerant).

1.15 Basics for working on the refrigerant circuit

⇒ “1.15.1 General points”, page 14

⇒ “1.15.2 Removing contaminants from the refrigerant circuit ”, page 14

⇒ “1.15.3 Additional work on vehicles with AC compressor without magnetic coupling ”, page 15

⇒ “1.15.4 O-ring seals”, page 15

⇒ “1.15.5 Work procedure before operating the air conditioning system after a repair”, page 15

1.15.1 General points

- Keep the work area and all tools clean.
- Wear work clothes, protective goggles and gloves when handling refrigerant and nitrogen.
- Switch on all available exhaust systems in the workshop.
- Use an A/C Service position only to empty the refrigerant circuit, only then may you open the screwed connections and replace defective components.
- Seal off opened aggregates and hoses immediately with caps to protect them against humidity and dirt.
- Only use tools and materials intended for refrigerant R134a.
- Protect the refrigerant oil from humidity by closing opened cans.

Note

- *After completing repair works, screw on screw caps on all the suction-, filler valves and service connections (with gaskets).*
- *Before operating the air conditioning system, observe the vehicle-specific filling contents.*
- *Do not top up with refrigerant, drain existing refrigerant and refill the system.*

1.15.2 Removing contaminants from the refrigerant circuit

Flush the refrigerant circuit with R134a (if necessary blow through), if:

– Humidity or dirt has penetrated into the refrigerant circuit (e.g. after an accident).

– The refrigerant has become dark and thick.

– After an A/C compressor replacement there is too much refrigerant oil in the refrigerant circuit.

– The air conditioning compressor must be replaced because of internal damage (e.g. it is too laud, jammed or no output).

Note

Remove contaminants from the refrigerant circuit
⇒ "7 Removing contaminants from the refrigerant circuit", page 52 .

1.15.3 Additional work on vehicles with AC compressor without magnetic coupling

Note

- *The engine must only be started if the refrigerant circuit is correctly assembled (A/C compressor operates).*
- *If possible, only start the engine if the refrigerant circuit is filled.*
- *The engine must on no account be started if vacuum is present in the refrigerant circuit (in case of evacuating with an A/C service station). This would result in mechanical damage of the A/C compressor.*
- *If the engine runs with an empty refrigerant circuit (no vacuum must be present in the circuit), an increase in its revolutions must be absolutely avoided. There must be at least a quarter of the refrigerant oil volume present in the AC compressor, which is prescribed for this refrigerant circuit and the engine may be run for max. 10 minutes.*
- *So that the AC compressor suffers no damage when the refrigerant circuit is empty, it is fitted with a secured oil supply. This means that approx. 40 to 50 cm^3 of refrigerant oil remains in the AC compressor.*

1.15.4 O-ring seals

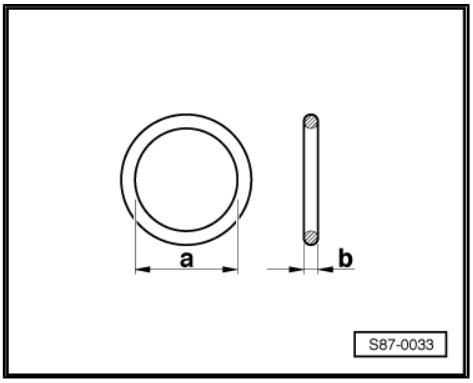

These O-rings seal off the connection points between the individual components of the refrigerant circuit.

Only use O-rings that are resistant to refrigerant R134a and related refrigerant oils. Original spare parts offer this guarantee.

Black and coloured O-rings are fitted.

O-ring seals:

- Only use once, replace.
- Pay attention to correct diameter -a- and -b-.
- Moisten with refrigerant oil before inserting.

1.15.5 Work procedure before operating the air conditioning system after a repair

– Turn the A/C compressor on the clutch or the belt pulley of the magnetic coupling about 10 revolutions by hand.

– Start the engine with the air conditioning system deactivated (air conditioner magnetic coupling - N25- and regulating valve for compressor of air conditioning system - N280- are not activated).

– After the idling speed has stabilised, switch on the AC compressor and operate it for at least 10 minutes at idle speed and at maximum refrigerating capacity.

2 General instructions for refrigerant circuit

⇒ “2.1 Components of the refrigerant circuit”, page 16

⇒ “2.2 Extractor, filler and measurement valves for quick couplings of the AC service station on the refrigerant circuit”, page 22

⇒ “2.3 Pressures and temperatures in the refrigerant circuit and its arrangement”, page 24

⇒ “2.4 Switch and sender on the refrigerant circuit”, page 28

⇒ “2.5 Electrical components which are not fitted on the refrigerant circuit”, page 29

⇒ “2.6 The inspection and measurement work can be performed using the pressure gauge”, page 30

⇒ “2.7 Air conditioning service and recycling equipment ”, page 31

⇒ “2.8 Repair and maintenance instructions for refrigerant circuit”, page 31

2.1 Components of the refrigerant circuit

⇒ “2.1.1 Distribution of the components of the refrigerant circuit and their influence on the high- and low-pressure side”, page 17

⇒ “2.1.2 AC compressor”, page 18

⇒ “2.1.3 Condenser”, page 19

⇒ “2.1.4 Fluid reservoir with dessicator”, page 19

⇒ “2.1.5 Evaporator”, page 20

⇒ “2.1.6 Throttle”, page 20

⇒ “2.1.7 Expansion valve”, page 21

⇒ “2.1.8 O-ring seals”, page 21

⇒ “2.1.9 Pipes and hoses of the refrigerant circuit”, page 21

⇒ “2.1.10 Pressure relief valve”, page 21

Caution

Non-approved tools or materials (e.g. stop leak additive) can cause damage/deterioration to the system.

Only tools and materials approved by the manufacturer may be used.

There is no guarantee if non-approved tools or materials were used.

- All the components of the refrigerant circuit, which are sent in for quality monitoring, must always be closed (use original screw caps of the original part).
- Replace damaged or leaky components of the refrigerant circuit.

2.1.1 Distribution of the components of the refrigerant circuit and their influence on the high- and low-pressure side

On the high-pressure side, the condenser as well as the fluid reservoir are present and as a separation from the HP liquid side and the LP liquid side, the throttle or the expansion valve is present.

The high pressure arises from the fact that the throttle valve or the expansion forms a constriction and the refrigerant dams, this leads to a pressure and temperature increase.

Too much high pressure arises if too much refrigerant or refrigerant oil is poured in, the condenser is dirty, the radiator fan is defective, a blockage is present in the system or if humidity is in the refrigerant circuit (icing of the throttle or the expansion valve).

On the low-pressure side are located, the evaporator, the temperature sensor - evaporator and as a separation from the HP gas side and the LP gas side, the AC compressor.

A pressure drop in the system can occur through refrigerant loss, through the throttle or expansion valve (constriction not given), the AC compressor which is defective or the evaporator which is iced up.

2.1.2 AC compressor

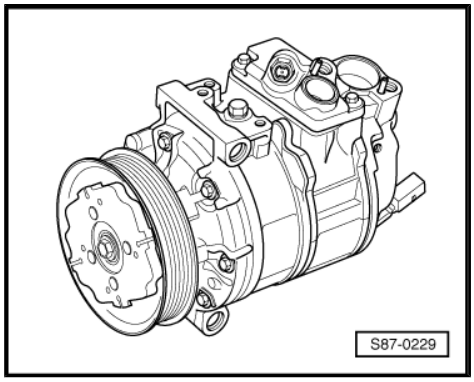

The AC compressor sucks refrigerant gas from the evaporator, compresses it and transfers it to the condenser.

The AC compressor contains refrigerant oil, which can be mixed with the R134a refrigerant at all temperatures.

The identification plate indicates which refrigerant is suitable for the AC compressor.

Different versions of A/C compressors with various parameters are fitted according to the engine and vehicle type.

The total volume of refrigerant oil is contained in the spare part AC compressor.

AC compressor with magnetic coupling:

- When the air conditioning system is switched on an electro-magnetic coupling, which is mounted on the AC compressor, generates the shaft grip between the V-ribbed belt pulley and the AC compressor crankshaft.

Note

So that the AC compressor suffers no damage when the refrigerant circuit is empty, the air conditioner magnetic coupling - N25- is switched off and the regulating valve for compressor of air conditioning system - N280- is no longer activated.

AC compressor without magnetic coupling:

Note

Observe safety measures on vehicles with an AC compressor without magnetic coupling
⇒ "1.15.3 Additional work on vehicles with AC compressor without magnetic coupling ", page 15 .

- An overload protection mounted in the V-ribbed belt pulley of the AC compressor, is set to trigger when the AC compressor is difficult to move and protects the V-ribbed belt drive against overload.
- Externally controlled A/C compressors with variable displacement of piston. The displacement of the AC compressor is controlled via an externally driven regulating valve with PWM signal on the suction side in accordance with the required cooling output.
- The AC compressor continues operating with a minimum power supply requirement even when the air conditioning system is off.

Belt protection for blocked A/C compressor (AC compressors without magnetic coupling)

The AC compressor operates continuously via a driver clutch -1- and -2- in the belt drive, whether or not the air conditioning system is switched on.

If the AC compressor blocks, the rubber elements -2- will shear off or the driver disc -1- will become deformed depending on the compressor temperature (it depends on the temperature).

In any case the belt pulley of the AC compressor can rotate while the driver disc/A/C compressor shaft is at a standstill.

Replace the AC compressor.

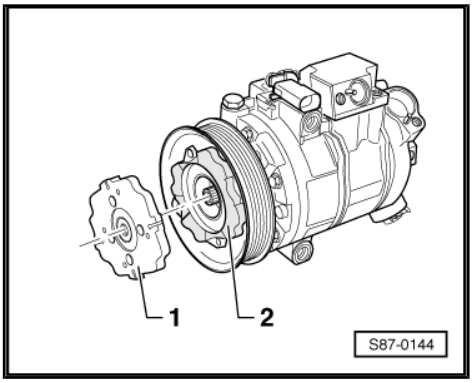

Note

The design of the driver clutch may differ depending on the compressor.

2.1.3 Condenser

The condenser dissipates heat from the compressed refrigerant gas into the ambient air.

During this process the refrigerant gas condenses and liquefies.

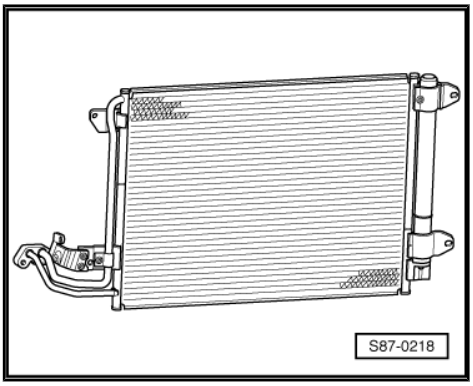

2.1.4 Fluid reservoir with dessicator

The fluid reservoir with dessicator gathers the liquid drops and conveys them to the throttle or expansion valve in a constant flow. Humidity, that has penetrated into the refrigerant circuit during assembly, is caught by a dessicator bag integrated in the fluid reservoir.

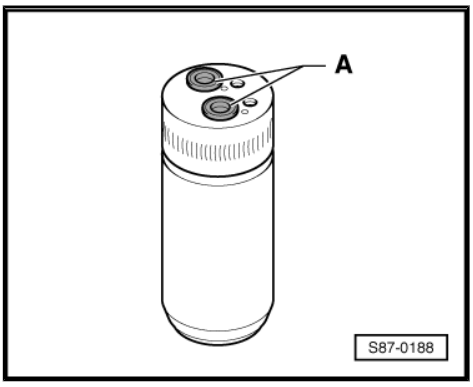

The new generation of fluid reservoirs -6- has a dessicator cartridge -5- and a strainer too, and is directly installed on the condenser.

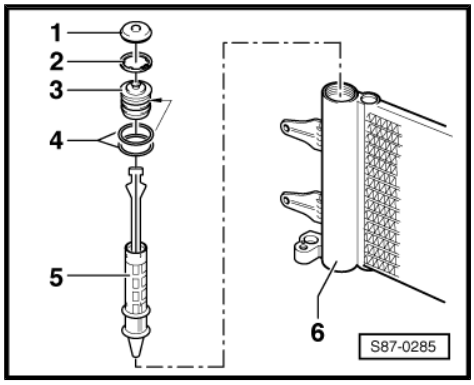

Note

- *Replace the fluid reservoir (if possible only the dessicator) if the refrigerant circuit was opened for a longer period of time (beyond the normal repair time) and humidity penetrated or if it is required because a specific complaint was made* *⇒ "8 Complaints", page 66* *.*
- *Only remove the screw plug (dessicator housing) shortly before the installation.*
- *The dessicator bag, which is located in a unclosed fluid reservoir (housing), will be saturated with humidity and become unusable after a short period of time.*
- *If necessary, observe the arrow for the direction of flow when installing.*

2.1.5 Evaporator

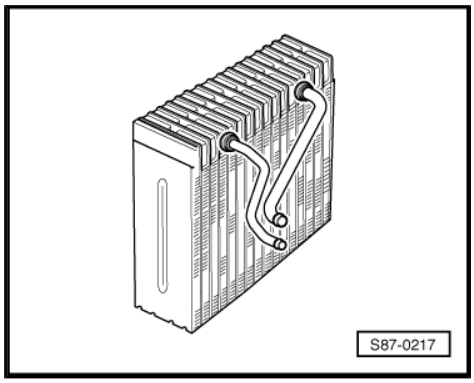

The liquid refrigerant evaporates in the evaporator. The heat required for this operation is drawn from the air flowing through the evaporator fins.

The air cools down the evaporator. The refrigerant evaporates and is sucked in with the absorbed heat as gas by the AC compressor.

The externally regulated AC compressor allows a variable air outlet temperature of 1 to 11°C.

2.1.6 Throttle

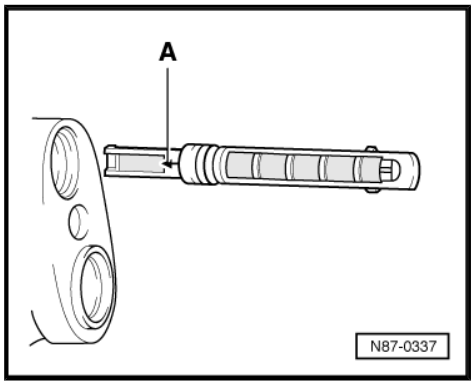

The throttle forms a constriction. This constriction throttles the flow, thus dividing the refrigerant circuit into a high-pressure side and a low-pressure side.

Upstream of the throttle the refrigerant is warm while under high pressure. Downstream of the throttle the refrigerant is cold while under low pressure.

Before the constriction there is a strainer for dirt protection, after the constriction there is a strainer to vaporize the refrigerant before it reaches the evaporator.

Note

- *-Arrow A- on the throttle points to the evaporator.*
- *Replace the throttle after each opening of the refrigerant circuit.*

2.1.7 Expansion valve

The expansion valve atomizes incoming refrigerant and controls the flow in accordance with the different pressures in such a way that, depending on the heat transport, the vapour only becomes gaseous at the outlet of the evaporator.

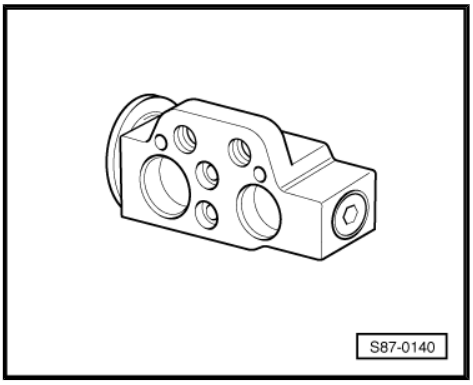

2.1.8 O-ring seals

Everything on this chapter, see
⇒ “1.15.4 O-ring seals”, page 15 .

2.1.9 Pipes and hoses of the refrigerant circuit

The mixture of refrigerant oil and refrigerant R134a corrodes certain metals (e.g. copper) and alloys and dissolves certain hose materials.

Therefore only original spare parts may be used.

Note

Observe the prescribed torques on screw connections and use the provided release tools when disconnecting the quick couplings.

2.1.10 Pressure relief valve

The pressure relief valve is located on the AC compressor and opens in the event of overpressure. The refrigerant does not flow out completely.

If the valve was opened the adjoining area is also covered in oil.

Opening pressure: 4±0.4 MPa (40±4 bar)

Closing pressure: at least 3.1 MPa (31 bar)

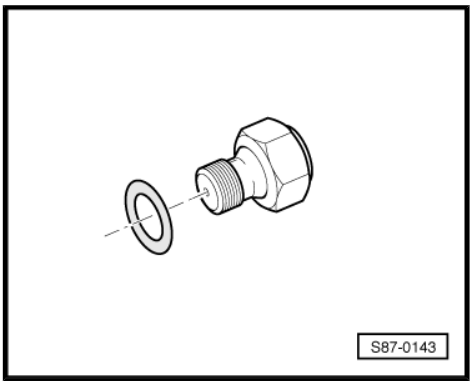

Note

If the pressure relief valve was opened, determine the cause of the overpressure in the system and eliminate it.

2.2 Extractor, filler and measurement valves for quick couplings of the AC service station on the refrigerant circuit

WARNING

Before removing the extractor and filler valves, the refrigerant must be drained off with the aid of the A/C service station.

If the refrigerant circuit is not opened within 10 minutes after draining it off, pressure can arise in the refrigerant circuit due to the post-evaporation. Drain the refrigerant once again.

- Only use valves and connections that are resistant to refrigerant R134a and related refrigerant oils.
- Different connections (outside diameter) for the high-pressure and low-pressure side guarantee that the quick-coupling adapters are not interchanged.
- After disconnecting the quick-coupling adapter tighten the caps to prevent any dirt from penetrating.

Special tools and workshop equipment required

♦ Socket inserts -T10364-

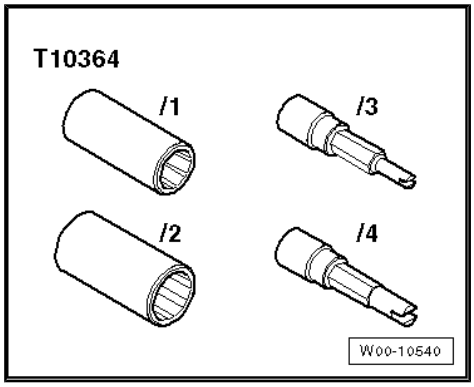

Arrangement in the vehicle, see ⇒ Heating, Air Conditioning; Rep. gr. 87 .

⇒ “2.2.1 Extractor, filler and measurement connections with Schrader valve”, page 23

⇒ “2.2.2 Extractor, filler and measurement connections with acting head valve”, page 23

2.2.1 Extractor, filler and measurement connections with Schrader valve

Note

- *Carefully screw in the handwheel of the service coupling after connecting the A/C service station and only so far until the valve of the service connection is safely opened (observe the pressure gauge, do not over-press the valve).*
- *Carefully tighten the valve core -2- because of the low tightening torque.*
- *These valves are available in different versions and thus have different tightening torques; if the valve core -2- has a thread of VG5 (5.2 x 0.7 mm, tyre valve) the tightening torque is 0.4 ±0.1 Nm, a valve core with a thread of M6 x 0.75 mm has a tightening torque of 0.9±0.1 Nm and a valve core with a thread of M8 x 1.0 mm has a tightening torque of 2.0±0.2 Nm.*
- *Observe the correct version of the valve core -2- and the correct assignment of the screw cap -4- see ⇒ Electronic Catalogue of Original Parts .*

High-pressure side

1 - Service coupling in the refrigerant line

2 - Extractor, filler and measurement valve

3 - Sealing ring

4 - Cap

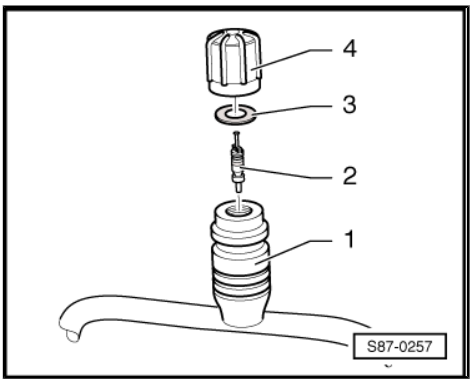

Low-pressure side

1 - Service coupling in the refrigerant line

2 - Extractor and measurement valve

3 - Sealing ring

4 - Cap

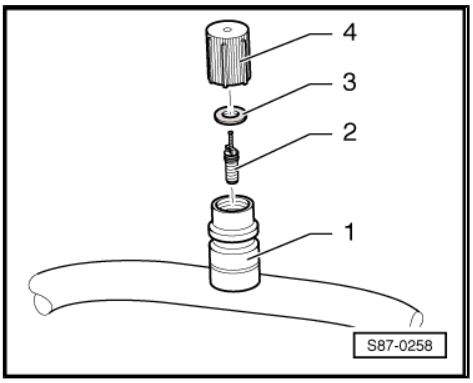

2.2.2 Extractor, filler and measurement connections with acting head valve

Note

- *Carefully screw in the handwheel of the service coupling after connecting the A/C service station and only so far until the valve of the service connection is safely opened (observe the pressure gauge, do not over-press the valve).*
- *The tightening torque of the valve -3- is 9±1 Nm.*

Low-pressure side

1 - Base with outside thread and groove for O-ring

2 - O-ring 7.6 mm; 1.8 mm

3 - Valve with inside thread M8 x 1 for cap

4 - Gasket

5 - Cap

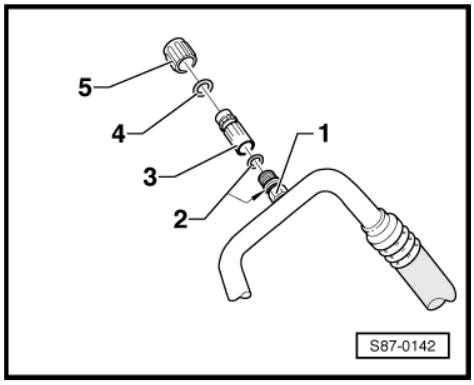

High-pressure side

1 - Base with inside thread

2 - O-ring 10.8 mm; 1.8 mm

3 - Valve with groove for O-ring and inside thread M8 x 1 for cap

4 - Gasket

5 - Cap

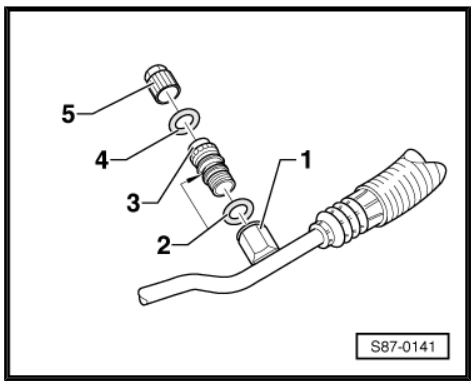

2.3 Pressures and temperatures in the refrigerant circuit and its arrangement

Caution

When working on the refrigerant circuit, observe the generally applicable safety instructions and the pressure tank regulation *⇒ "1 General notes on the air conditioning system", page 1* .

The pressures and temperatures in the refrigerant circuit are dependent on current operating conditions (e.g. engine speed, radiator fan stage 1, 2 or 3, engine temperature, AC compressor on or off) as well as on the effect of the environmental characteristics (e.g. ambient temperature, humidity, required cooling capacity).

On vehicles with the regulating valve for compressor of air conditioning system - N280- , the pressure on the low-pressure side is changed by the actuation of the valve.

Air conditioning compressors which do not regulate their own power output are switched off by the relevant control unit via the regulating valve for compressor of air conditioning system - N280- at an evaporator temperature below 0 °C.

This is why the indicated values in the following table are only reference points. They are set after approx. 20 min and at an engine speed of 1500 to 2000 rpm and an ambient temperature of 20 °C.

At 20 °C and if the engine is stationary, a pressure of 4.7 bar arises in the refrigerant circuit
⇒ "1.7 Vapour pressure table for refrigerant R134a", page 6 .

Note

The pressure is given in different units, 1 MPa equals 10 bar overpressure or 145 psi. One bar absolute pressure plus 0 bar overpressure corresponds approximately to the ambient pressure (atmospheric pressure).

⇒ “2.3.1 Pressures, temperatures and arrangement of the refrigerant circuit with expansion valve”, page 25 .

⇒ “2.3.2 Pressures, temperatures and arrangement of the refrigerant circuit with throttle”, page 26 .

2.3.1 Pressures, temperatures and arrangement of the refrigerant circuit with expansion valve

Component	Aggregate state of refrigerant	Pressure (bar overpressure)	Temperature in Celsius
Evaporator -13-, from inlet to outlet	Vapour	approx. 1.2 bar[1)]	approx. -7 °C [2)]
Expansion valve -12-	Liquid, released in vapour	approx. 14 bar	approx. +55 °C (high pressure side), reduced to -7 °C (low pressure side)
High pressure switch / high pressure sender -6-	Liquid	approx. 14 bar	approx. +55°C
Service connection - high pressure side -10- and fluid reservoir -9-	Liquid	approx. 14 bar	approx. +55°C
Condensor -8-	from gas (at the inlet) via vapour to liquid (at the outlet)	approx. 14 bar	from approx. +65 °C (at the inlet) to approx. +55 °C (at the outlet)
Pressure relief valve -5- and air conditioning compressor - high pressure side	gas	approx. 14 bar	approx. +65°C
Air conditioning compressor - low pressure side	gas	approx. 1.2 bar[1)]	approx. -1 °C [2)]
Service connection - low pressure side -14-	gas	approx. 1.2 bar[1)]	approx. -1 °C [2)]

[1)] In refrigerant circuits with regulated AC compressor, the pressure is maintained at approx. 2 bar absolute pressure (corresponds to approx. 1 bar overpressure) despite the varying heat transfer and different engine speeds. This is only valid within the performance range of the AC compressor; in the event the performance range of the AC compressor is exceeded, the pressure rises
⇒ “9 Check the pressure in the refrigerant circuit (with the A/C service station)”, page 71 .

[2)] In refrigerant circuits with regulated AC compressor, the temperature is maintained within the performance range of the AC compressor despite the varying heat transfer and different engine speeds. This is only valid within the performance range of the AC compressor. If the performance ranges of the AC compressor are exceeded, the temperature rises.
⇒ “9 Check the pressure in the refrigerant circuit (with the A/C service station)”, page 71

HP = High-pressure side

LP = Low-pressure side

1 - Regulating valve for compressor of air conditioning system - N280-

2 - AC compressor

3 - Belt pulley
- ❑ with anti-lock device

4 - Oil drain plug

5 - Pressure relief valve

6 - High-pressure sender - G65-

7 - Connection with valve

8 - Condenser

9 - Fluid reservoir with dessicator

10 - Extractor, filler and measurement valve
- ❑ High-pressure side

11 - Screw cap

12 - Expansion valve

13 - Evaporator

14 - Extractor and measurement valve
- ❑ Low-pressure side

15 - Screw cap

16 - Shock absorber
- ❑ for damping of pressure fluctuations
- ❑ only fitted on certain models

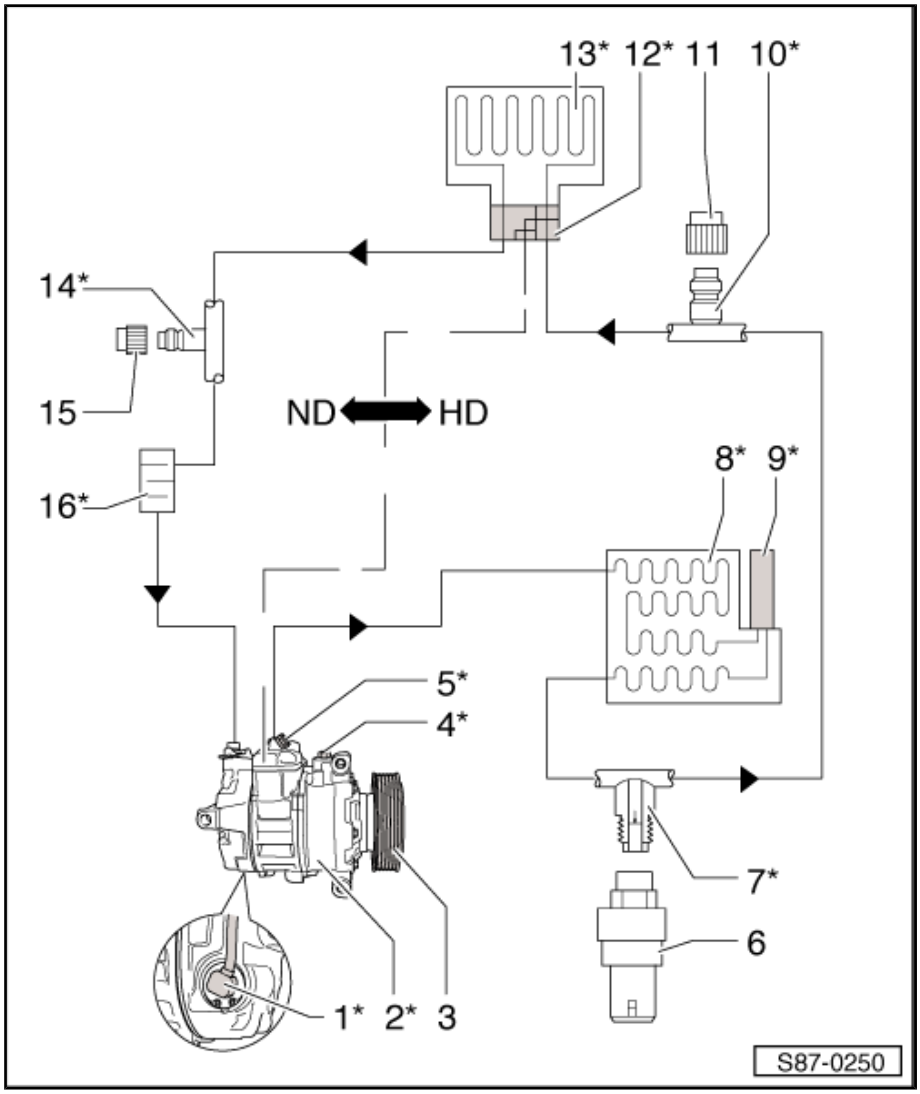

2.3.2 Pressures, temperatures and arrangement of the refrigerant circuit with throttle

Component	Aggregate state of refrigerant	Pressure (bar overpressure)	Temperature in Celsius
Air conditioning compressor - high pressure side	gas	up to 20 bar	up to +70 °C
Condensor -7-	from gas via vapour to liquid	up to 20 bar	up to +70 °C
Throttle -11-	from liquid to vapour	High pressure side up to 20 bar, low pressure side greater than 1.0 bar	High pressure side up to +60 °C, low pressure side warmer than -4 °C
Evaporator -12-	from vapour to gas	greater than 1.0 bar	warmer than -4 °C
Catch pan -15-	gas		
Air conditioning compressor - low pressure side	gas		

The “regulating” AC compressor maintains the pressures on the low pressure side at approx. 2 bar (corresponds to approx. 1 bar overpressure) even at different engine speeds. This is only valid within the performance range of the AC compressor. If the per-

formance ranges of the AC compressor are exceeded
⇒ “9 Check the pressure in the refrigerant circuit (with the A/C service station)”, page 71 .

HP = High-pressure side

LP = Low-pressure side

1 - AC compressor

2 - Air conditioning system magnetic coupling - N25-

3 - Oil drain plug

4 - Pressure relief valve

5 - Connection with valve

6 - Air conditioner pressure switch - F129-

7 - Condenser

8 - Screwed connection in the refrigerant line

9 - Screw cap

10 - Extractor and filler valve
- ❑ High-pressure side

11 - Throttle

12 - Evaporator

13 - Extractor and filler valve
- ❑ Low-pressure side

14 - Screw cap

15 - Catch pan with dessicator

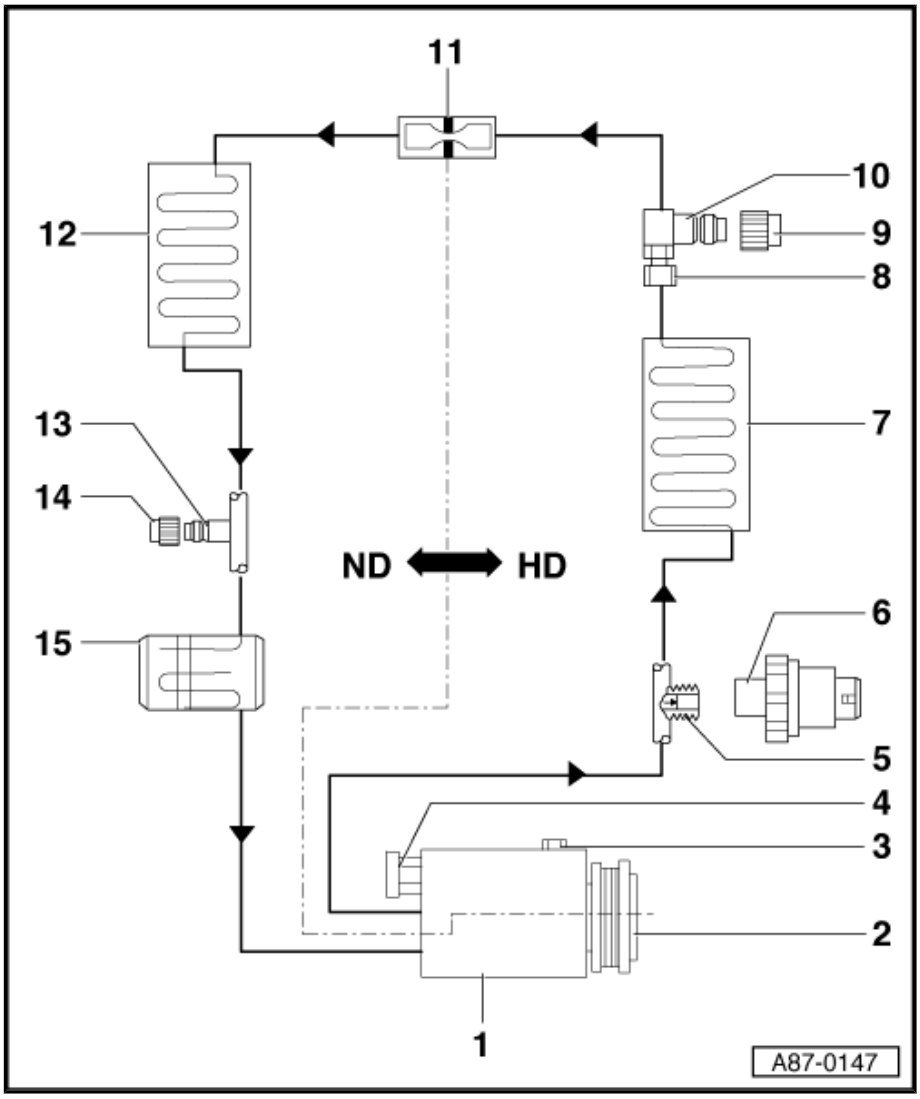

2.4 Switch and sender on the refrigerant circuit

⇒ “2.4.1 Outside temperature switch F38 ”, page 28

⇒ “2.4.2 Air conditioner pressure switch F129 ”, page 28

⇒ “2.4.3 High-pressure sender G65 ”, page 28

⇒ “2.4.4 Regulating valve for compressor of air conditioning system N280 ”, page 29

2.4.1 Outside temperature switch - F38-

Switches off the magnetic coupling at a temperature of 2°C and switches it on again at 5°C (evaporator icing protection).

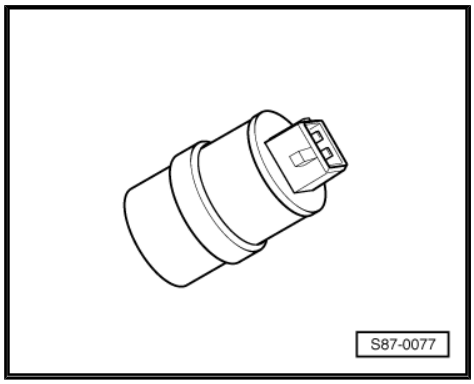

2.4.2 Air conditioner pressure switch - F129-

This pressure switch has 3 functions:

1 - Switches the radiator fan to the next speed in the event of a pressure rise [approx. 1.6 MPa (16 bar) overpressure] in the refrigerant circuit.

2 - Disconnects the air conditioning system in the event of excessive pressure (approx. 3.2 MPa/32 bar overpressure) - insufficient engine cooling -.

3 - Disconnects the air conditioning system if the pressure is too low (0.2 MPa/2 bar overpressure) (e.g. during loss of refrigerant).

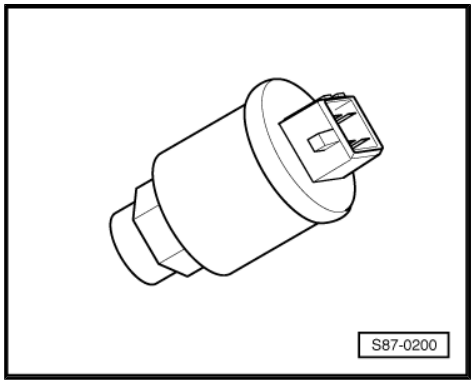

2.4.3 High-pressure sender - G65-

Note

The high pressure sender - G65- (specifically designed for vehicles) can be installed instead of the pressure switch for the air conditioning system - F129- .

The high-pressure sender - G65- determines the pressure in the refrigerant circuit and transmits the values to the Air conditioning system control unit - J301- or to the Climatronic control unit - J255- .

The following are shifted via these control units:

- The radiator fan - V7- switches to the next speed in the event of a pressure rise in the refrigerant circuit
- Reduction of the A/C compressor output if the pressure is too high, 3.2 MPa (32 bar), e.g. too little engine cooling
- Reduction of the A/C compressor output if the pressure is too low, 0.2 MPa (2 bar), e.g. refrigerant loss

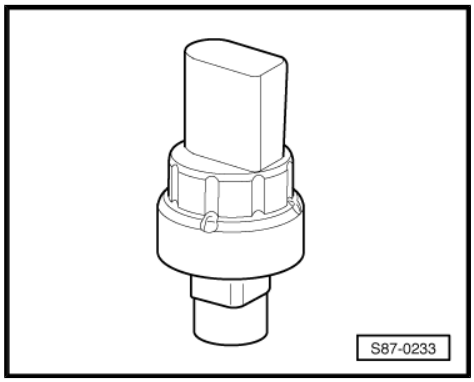

2.4.4 Regulating valve for compressor of air conditioning system - N280-

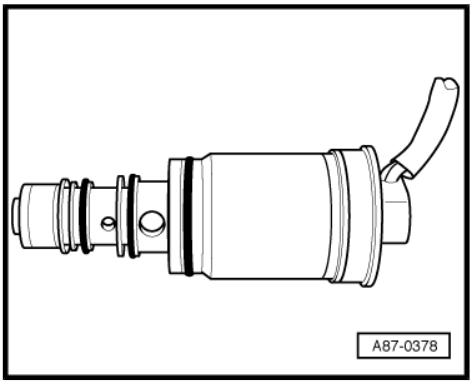

The regulating valve is installed in the AC compressor. It is actuated by the control and display unit for air conditioner Climatronic - E87- or the Climatronic control unit - J255- (if necessary specifically designed for vehicles via a databus and an additional control unit). The pressure on the low-pressure side is influenced by the regulating valve and thus the temperature in the evaporator is regulated.

Note

The regulating valve for compressor of air conditioning system - N280- is a component of the AC compressor and cannot be replaced separately.

2.5 Electrical components which are not fitted on the refrigerant circuit

⇒ "2.5.1 Radiator fan control unit J293 ", page 29

⇒ "2.5.2 Evaporator vent temperature sender G263 or evaporator temperature sensor G308 ", page 29

2.5.1 Radiator fan control unit - J293-

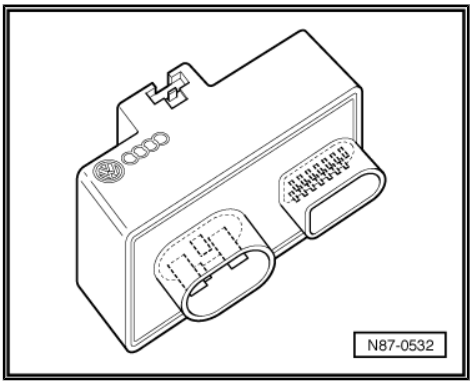

This control unit switches the magnetic coupling and thus the AC compressor on and off. It turns on the coolant fans and calculates the pressure in the refrigerant circuit on vehicles with high-pressure sender - G65- ⇒ Current flow diagrams, Electrical fault finding and Fitting locations.

2.5.2 Evaporator vent temperature sender - G263- or evaporator temperature sensor - G308-

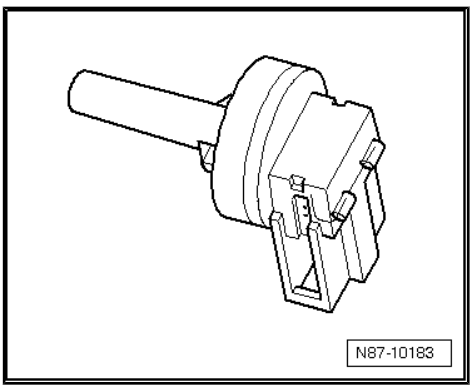

The evaporator vent temperature sender - G263- determines the temperature behind the evaporator. This value passes on to the air conditioning system control unit and serves as a reference signal for the regulation of the AC compressor. Thus, icing of the evaporator is avoided.

2.6 The inspection and measurement work can be performed using the pressure gauge

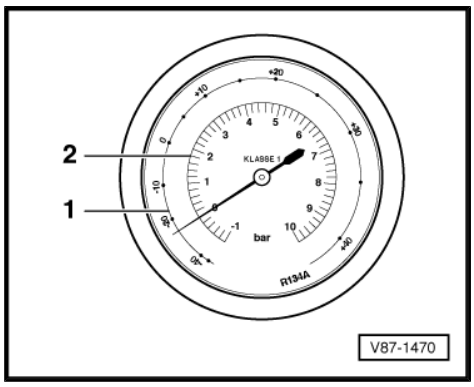

Readout on the pressure gauge

1 - Temperature scale for refrigerant R134a CF3–CH2F or CH2F–CF3

2 - Pressure scale

The pressure gauges can have one or more temperature scales in addition to the pressure scale. The values of the scale for R134a are assigned to the relevant vapour pressure table.

As various refrigerants build up different vapour pressures at the same temperature, every temperature scale is marked for the corresponding refrigerant.

⇒ “2.6.1 Pressure gauges allow to carry out the following inspection and measurement work”, page 30

2.6.1 Pressure gauges allow to carry out the following inspection and measurement work

Pressure and temperature measurement on the refrigerant circuit

- The high-pressure manometer measures the pressure and the temperature, which spreads evenly from the outlet of the AC compressor via the condenser up to the constriction (throttle or expansion valve) when the AC compressor is switched on.
- The low-pressure manometer measures the pressure and the temperature, which spreads evenly from the constriction (throttle or expansion valve) via the evaporator up to the inlet of the AC compressor.

Note

The interdependence described on the pressure gauges, between pressure and temperature, only exists where liquid or vapour is contained in the refrigerant circuit, however not gas. In the gaseous condition, the temperature is around 10 °C to 30 °C higher than the pressure gauge indicates.

Evidence of refrigerants in a closed reservoir

In a closed reservoir or in the refrigerant circuit, the refrigerant R134a is present if the temperature reading of the pressure gauge corresponds to the temperature of the refrigerant (liquid is at ambient temperature).

A closed reservoir or a switched off refrigerant circuit is empty if the temperature reading of the pressure gauge lies below the temperature of the refrigerant.

Note

The interdependence described on the pressure gauges, between pressure and temperature, does no longer exist if no liquid is contained and the pressure only builds up through gas.

2.7 Air conditioning service and recycling equipment

Currently various manufacturers offer on the market air conditioning service equipment for extracting, cleaning and filling the refrigerant in air conditioning systems for vehicles.

Certain A/C service stations can also be used for flushing the refrigerant circuit (if necessary with a suitable additional system and various adapters).

Allocating the extraction and filling systems in groups

Note

- *The air conditioning service and recycling equipments used in the vehicle workshops are extraction and filling systems (group “3”) which do not need a permission and must be only operated by knowledgeable personnel. The systems must be operated and maintained according to the manufacturer's documentation.*
- *The extraction and filling systems of the group “1” and “2” are used in the vehicle workshops.*

The extraction and filling systems of the group “3”:

Portable extraction and filling systems to fill the pressure gas tanks which are firmly connected to the system.

The refrigerant or refrigerant/oil mixture is filled into pressure gas tanks which are permanently connected to the portable systems. In this case, according to the “pressure tank regulation”, the pressure gas tanks are equal to the pressure tanks.

Note

There is no need for a permission nor the need to have the filling systems examined by the expert, because the gas is filled into pressure gas tanks which are equivalent to pressure tanks. (A permit, which is subject to the audit requirement, is in turn required for the system in order to fill up the pressure gas tanks with what is present in these pressure tanks and to pass them on to others).

2.8 Repair and maintenance instructions for refrigerant circuit

WARNING

When working on the refrigerant circuit, observe the generally applicable safety instructions and the pressure tank regulation.

Caution

Non-approved tools or materials (e.g. stop leak additive) can cause damage/deterioration to the system.

Only tools and materials approved by the manufacturer may be used.

There is no guarantee if non-approved tools or materials were used.

Special tools and accessories

In order to implement a proper and professional repair of an air conditioning system:

- Special tools and materials are required.
- The basic instructions belonging to the leak detector must be observed.
- If general knowledge is required.

Note

Draining the refrigerant into the environment is not permitted.

3 Legal texts and legal regulations

⇒ “3.1 Laws and regulations”, page 33

⇒ “3.2 Verification procedure of refrigerant”, page 34

3.1 Laws and regulations

The effects of the climate change can now be observed worldwide. The climate protection is therefore one of the most important tasks of mankind. This task presents huge challenges for all the parties concerned.

The global climate protection goals are defined, among other things, in the so-called Kyoto Protocol. In this protocol are included carbon dioxide reduction targets as well as targets for reducing fluorinated greenhouse gases such as for the refrigerant R134a due to the high greenhouse potential.

Numerous relevant laws were adopted for the motor industry for example at the European level:

- Regulation (EC) No. 1005/2009 (replaces the regulation (EC) No. 2037/2000)
- Regulation (EC) No. 842/2006
- Regulation (EC) No. 706/2007
- Regulation (EC) No. 307/2008
- Guideline 2006/40/EC

Different or additional laws and directives apply in other countries and on other continents.

All persons who carry out maintenance and repair work on air conditioning systems for vehicles must have attended a training course or a training program and must have general knowledge (proof of expertise). Outside the European Community, different or additional provisions may apply.

In general the following applies:

Operation, maintenance, take out of operation, guarantee of return

- During the operation, when carrying out repair work and when taking products out of operation that contain refrigerants, contrary to the state of the art, it is prohibited to let those agents escape into the atmosphere which are contained in these products.
- Therefore it is recommended to keep records on the initial quantity for the operation and maintenance work so that a proof of use can be submitted at the request of the responsible authority, if required. A record sheet must no longer be kept in the EC on the basis of a Regulation of the European Parliament in the year 2005. Other regulations maybe valid in countries that do not belong to the EC.
- Distributors of agents and preparations referred to in the above-mentioned regulations are required to withdraw these agents and preparations after use or to ensure the withdrawal by a third party designated by them.
- Maintenance work on products and those products which are taken out of operation containing refrigerants, referred to in the mentioned regulations as well as the withdrawal of the agents and preparation referred to in these regulations must only be carried out by persons who have the required expertise and technical equipment.

Crimes and misdemeanors

- A misdemeanour in the sense of the aforementioned ordinances and laws: If someone acts with intent or negligently during operation, commissioning, or when putting products out of service which contain the mentioned refrigerants, contrary to the state of the art or if someone intentionally or negligently violates the above-mentioned applicable laws and regulations.

Disposing of the refrigerant and the refrigerant oil

The legal regulations for handling and disposing of refrigerants and refrigerant oils must be stipulated in the Emissions Protection Act, Recycling Management and Waste Management Act.

Refrigerant

The provided refrigerants to be disposed of must be filled into marked recycling containers in compliance with the permissible filling quantity and returned to the manufacturer responsable for their disposal in accordance with the Environmental Protection Legislations (different or additional directives may apply in certain countries).

Refrigerant oil

Used refrigerant oil of systems with halogenised hydrocarbons must be disposed of in the same way as waste requiring special supervision. A mixture with other oils or agents is not allowed. The refrigerant oil must be disposed of as oil of unknown origin. The appropriate storage and disposal must be carried out in accordance with the specific country guidelines.

3.2 Verification procedure of refrigerant

Proof must be given regarding the consumption of a specific quantity of refrigerants per year in accordance with the Environmental Statistics Act.

Therefore, vehicle workshops can expect to give information about the consumption of refrigerants to the respective regional authorities concerned. Therefore it is always recommended to keep a record sheet.

Note

- *A record sheet for the amount of refrigerant which is converted in the vehicle workshop, must no longer be kept in the EC on the basis of a Regulation of the European Parliament in the year 2005. At present, a record sheet is only necessary for a consumption of 50 kg or more per year (see, for example, the regulation (EC) No 1005/2009).*
- *Since the regional authorities may require information on the consumption of refrigerants above a certain volume (currently above a consumption of 20 kg per year), it is recommended to always keep an appropriate record sheet.*
- *Other regulations maybe valid in countries that do not belong to the EC.*

4 Refrigerant circuit

⇒ “4.1 Important repair instructions for air conditioning systems”, page 35

4.1 Important repair instructions for air conditioning systems

- Never mix different refrigerants.
- The refrigerant oils R134a and R12, specially developed for the refrigerant circuits, must not be mixed.
- A/C Service stations, which come in contact with the refrigerant, must only be used for the provided refrigerant.
- The components of the refrigerant circuit for refrigerant R134a are marked with green stickers or are arranged in such a way that they cannot be switched with components for refrigerant R12 (e.g. other threads).
- A sign is affixed in the engine compartment at the lock carrier or in the plenum chamber which is intended to draw the attention to the refrigerant used.

Note

Observe the information contained in the chapters “safety instructions”
⇒ “1.14 Safety measures when working on vehicles with air conditioning system and when using refrigerant R 134a”, page 13 and “basics for working on the refrigerant circuit”
⇒ “1.15 Basics for working on the refrigerant circuit ”, page 14 when working on the refrigerant circuit.

5 Working with the A/C service station

For currently available AC Service stations, see ⇒ Catalogue of factory equipment .

Caution

If it is suspected that chemical agents (special additives) have been filled into the vehicle refrigerant circuit for sealing any leaks, the A/C Service station does not connect and the refrigerant cannot be drained.

Chemical agents (special additives) used for sealing leaks form deposits in the refrigerant circuit which impair the function of the air conditioning system and lead to a failure of the air conditioning system (and the A/C Service station).

The customer must be informed that there are agents present in his air conditioning system which were not approved by Škoda. This air conditioning system cannot be emptied or repaired by them.

Note

- *The company Škoda rejects the use of chemical agents for sealing leaks on the refrigerant circuit.*
- *Chemical agents (special additives) used for sealing leaks on the refrigerant circuit usually react to the ambient air and the humidity contained within the air. They lead to functional problems of the valves and other components with which they come into contact through deposits in the refrigerant circuit (and the A/C Service station). These deposits can no longer be completely removed from the components.*
- *In most cases, chemical agents used for sealing leaks in the refrigerant circuit cannot be detected from the outside. The necessary sticker, which must be affixed for identification is often not present. Therefore be careful with a vehicle, whose past you are not familiar with.*
- *In the accessory trade containers are offered in which these chemical agents (for sealing leaks) should be deposited. Since the company Škoda rejects the use of these agents, no statement about the effectiveness and the deposition rate of these filters can be made at this point.*

⇒ “5.1 Important instructions for working with the A/C Service station”, page 37

⇒ “5.2 Connecting the A/C service station to the refrigerant circuit for measuring and testing”, page 38

⇒ “5.3 Empty the refrigerant circuit with the A/C service station.”, page 38

⇒ “5.4 Evacuate the refrigerant circuit with the A/C service station.”, page 39

⇒ “5.5 Fill the refrigerant circuit with the A/C service station.”, page 40

⇒ “5.6 Operate the air conditioning system after filling”, page 40

⇒ “5.7 Fill refrigerant into the reservoir (filling cylinder or reservoir bottle) of the A/C service station”, page 40

⇒ “5.8 Draining the A/C service station”, page 41

5.1 Important instructions for working with the A/C Service station

For operating the A/C service stations (currently available A/C service positions see ⇒ Catalogue of factory equipment) the following must be observed:

– The installed filters and dessicators must be replaced at the latest after reaching the operating time specified in the related operating instructions.

– If the A/C service station is also used for the flushing of the refrigerant circuit, the installed filters and dessicators must be replaced within short periods of time.

– Only fill in refrigerant oils which are approved for the refrigerant circuit specifically designed for vehicles.

– If there is any doubt about the composition of the refrigerant, the refrigerant which was suctioned out of the refrigerant circuit must not be re-used even after it has been cleaned in the A/C service station.

• In this case the A/C service station must be drained ⇒ page 41 , if necessary the system must be cleaned, the filters and the dessicators as well as the filled-in refrigerant oil must be replaced.

• Contaminated refrigerant can be returned to the supplier of the refrigerant, e.g. in the Federal Republic of Germany, in so-called recycling bottles for preparation or ecological disposal (different or additional directives may apply in certain countries).

The commercially available A/C service stations can be sub-divided into 2 groups:

♦ A/C service stations which clean drained refrigerant for re-use (so-called extraction and recycling stations).

♦ A/C service stations which fill drained refrigerant into recycling bottles (in order to then treat it commercially), these systems are known as extraction systems.

5.2 Connecting the A/C service station to the refrigerant circuit for measuring and testing

Note

- *Depending on the type of the selected A/C service station, variations can occur in the work procedure.*
- *The work procedure must always be carried out as described in the operating instructions of the selected A/C service station.*

So that neither air nor humidity can pass through the filling hoses into the refrigerant circuit, they must be connected according to the following work procedure:

– Switch off ignition.

– Connect the A/C service station to the voltage supply.

– Unscrew the screw caps from the service connections or the connections with valve, see refrigerant circuit specifically designed for vehicles ⇒ Heating, Air Conditioning; Rep. gr. 87 .

– If necessary, evacuate the filling hoses.

– Connect the filling hoses of the A/C service station with quick couplings to the service connections of the refrigerant circuit.

WARNING

Do not open the valves on the low or high pressure side with the engine running. Otherwise, the A/C compressor or the A/C service station can be destroyed due to the short-circuit between the high and low pressure side of the refrigerant circuit, when the air conditioning system is switched on.

– Screw in the handwheel of the quick-coupling adapters so far until the valves of the service connections are safely opened (observe the pressure gauge, do not over-press the valve).

5.3 Empty the refrigerant circuit with the A/C service station.

- The refrigerant circuit must be drained if parts of the refrigerant circuit are removed, in case there is any doubt about the volume of refrigerant in the circuit or when required according to the safety measures.
- Depending on the type of the selected A/C service station, variations can occur in the work procedure.
- The work procedure must always be carried out as described in the operating instructions of the selected A/C service station.

Draining off:

– Connect the A/C service station to the service connections according to the relevant operating instructions (see refrigerant circuit specifically designed for vehicles) and operate it.

Note

- *It cannot be excluded that some refrigerant oil is suctioned out of the refrigerant circuit together with the refrigerant. In order to ensure the lubrication of the AC compressor, the refrigerant oil volume in the circuit must be topped up with fresh oil ⇒ Heating, Air Conditioning; Rep. gr. 87 .*
- *On vehicles with an AC compressor without magnetic coupling (with regulating valve for compressor of air conditioning system - N280-) the engine should run with an empty refrigerant circuit for a relatively short period of time (max. 10 minutes), thus a high engine speed must be avoided (the AC compressor keeps on running), see* *⇒ "1.15.3 Additional work on vehicles with AC compressor without magnetic coupling ", page 15* .
- *On vehicles with an AC compressor with magnetic coupling, the air conditioner pressure switch - F129- or the high pressure sender - G65- switches off the magnetic coupling as soon as the refrigerant is in the refrigerant circuit.*
- *The engine must only be started if the refrigerant circuit is correctly assembled.*

5.4 Evacuate the refrigerant circuit with the A/C service station.

- Before the refrigerant circuit is filled with refrigerant, it must be evacuated. In addition, humidity is drawn from the circuit.
- Depending on the type of the selected A/C service station, variations can occur in the work procedure.
- The work procedure must always be carried out as described in the operating instructions of the selected A/C service station.

Caution

- ***When evacuating and if vacuum is present in the refrigerant circuit, the engine must not be started.***
- ***If the engine is started when vacuum is present in the refrigerant circuit, the A/C compressor can be damaged.***

Evacuating:

– Connect the A/C service station to the service connections according to the relevant operating instructions (see refrigerant circuit specifically designed for vehicles) and operate it.

If the vacuum in the system does not remain when evacuating (see instructions), the following must be done:

– Pour 100 g of refrigerant into the refrigerant circuit, use a leak detector to detect leaks and eliminate them.

– Evacuate the refrigerant circuit once again.

Note

Only if the vacuum stays steady, the refrigerant circuit can be filled.

5.5 Fill the refrigerant circuit with the A/C service station.

- Depending on the type of the selected A/C service station, variations can occur in the work procedure.
- The work procedure must always be carried out as described in the operating instructions of the selected A/C service station.
- The volume of refrigerant oil that was drained off must again be added to the circuit when filling.

5.6 Operate the air conditioning system after filling

Note

If the AC compressor was removed, the free wheel must be turned by hand approx. 10 turns on the V-ribbed belt pulley before it is first put into service. This prevents that no damage occurs after switching on the air conditioning system for the first time as a result of fluid hammer in the AC compressor (if oil is present in the cylinder of the AC compressor, it is pressed out when turning).

– Start the engine with the AC compressor switched off (version with magnetic coupling).
– Set the AC compressor to the lowest possible performance; operating mode “Econ” or A/C off (version without magnetic coupling with regulating valve).
– Wait until the idling speed has stabilised.
– Switch on the AC compressor and operate the system for at least 2 minutes at idle speed.
– If necessary, check the pressures in the refrigerant circuit with the A/C service station.
– Switch off engine.
– Release the handwheel on the quick-coupling adapter.
– Remove the filling hoses from the refrigerant circuit.
– Screw on the protective caps once again.

5.7 Fill refrigerant into the reservoir (filling cylinder or reservoir bottle) of the A/C service station

- The work procedure must always be carried out as described in the operating instructions of the A/C service station.
- A certain amount of refrigerant is recommended for filling into each air conditioning system. In order to ensure that neither too much nor too little refrigerant is filled in, the reservoir for the refrigerant is standing on a scale.

WARNING

Do not overfill. A completely filled reservoir (filling cylinder or reservoir bottle) could burst if the temperature rises, resulting in catastrophic consequences ⇒ *“1.8.9 Filling factor”, page 8* *.*

5.8 Draining the A/C service station

Note

- *If it is necessary to drain the A/C service station (e.g. because contaminated refrigerant was drained off), always replace all the filters and dessicators (shortly before installing, remove the filters and dessicators from the airtight sealed transport packaging in order to keep the increase of humidity as low as possible).*
- *Refrigerant bottles which are filled with contaminated and used refrigerant are known under the designation "recycling bottles".*
- *Always evacuate recycling bottles before filling with refrigerant for the first time (refrigerant bottles, in which there is air, must not be filled with refrigerant).*
- *Different types of refrigerants must not be mixed with each other (refrigerant mixtures can no longer be recycled yet they must be disposed of). If there is any doubt about the composition of the bottle content, the refrigerant operator must be advised.*

Caution

- *When filling up recycling bottles (pressure gas tanks) the existing regulations, technical rules and laws must be observed.*
- *In any case, avoid overfilling the recycling bottles (overfilled recycling bottles have a too low gas blanket in order to absorb the liquid expansion caused by the effect of the heat). There is a risk of bursting.*
- *For your own safety, only use recycling bottles with a safety valve fitted.*
- *Recycling bottles must be weighed on a calibrated scale when filling up. The maximum authorised filling capacity is 75 % (filling factor 0.75) of the filling weight given on the recycling bottle (it cannot be excluded that besides the refrigerant, refrigerant oil is also filled into the recycling bottle).*

6 Leak detection on the refrigerant circuit

⇒ “6.1 Looking for leaks in the refrigerant circuit - important instructions”, page 42

⇒ “6.2 Leak detection on the refrigerant circuit with compressed air or nitrogen”, page 43

⇒ “6.3 Detecting leaks on the refrigerant circuit with the leak detector VAG1796 ”, page 45

⇒ “6.4 Detecting leaks on the refrigerant circuit with the leak detector VAS 6196 or VAS 6201A ”, page 45

6.1 Looking for leaks in the refrigerant circuit - important instructions

Note

- *On the open market, numerous procedures are offered for leak detection on the refrigerant circuit. These procedures do not always produce accurate results. In case they are not carried out according to the instructions, it can happen that components of the refrigerant circuit appear to be leaking even though they are leaktight. In addition, during certain procedures, components of the refrigerant circuit can be damaged or initially damaged.*
- *If leaks are found on some components, they must not be repaired but replaced with original parts.*
- *If a major leak is suspected, do not fill the refrigerant circuit with the refrigerant R134a, see ⇒ “6.2 Leak detection on the refrigerant circuit with compressed air or nitrogen”, page 43 .*

Caution

- ***It is prohibited to use chemical agents for sealing any leaks on the refrigerant circuit.***
- ***If it is suspected that chemical agents have been filled into the vehicle refrigerant circuit for sealing any leaks, do not connect the A/C service station and do not drain the refrigerant.***
- ***Chemical agents used for sealing leaks form deposits in the refrigerant circuit which impair the function of the air conditioning system and lead to a failure of the air conditioning system (and the A/C service station).***
- ***The company Škoda rejects the use of chemical agents for sealing leaks on the refrigerant circuit.***

Note

- *Chemical agents (special additives) used for sealing leaks on the refrigerant circuit usually react to the ambient air and the humidity contained within the air. They lead to functional problems of the valves and other components with which they come into contact through deposits in the refrigerant circuit (and the A/C Service station). These deposits can no longer be completely removed from the components.*
- *In most cases, chemical agents used for sealing leaks in the refrigerant circuit cannot be detected from the outside. The necessary sticker, which must be affixed for identification is often not present. Therefore be careful with a vehicle, whose past you are not familiar with.*
- *In the accessory trade containers are offered in which these chemical agents (for sealing leaks) should be deposited. Since the company Škoda rejects the use of these agents, no statement about the effectiveness and the deposition rate of these filters can be made at this point.*

6.2 Leak detection on the refrigerant circuit with compressed air or nitrogen

A major leak can be determined, for example, if a pressure of maximum 15 bar builts up in the refrigerant circuit with clean and dried compressed air or with nitrogen.

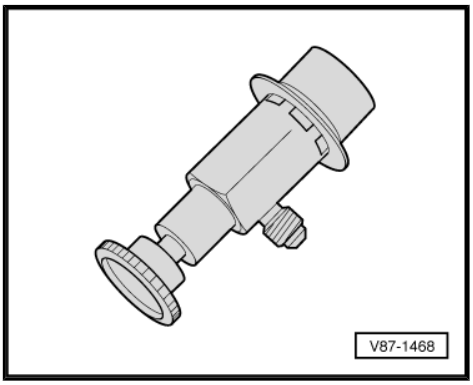

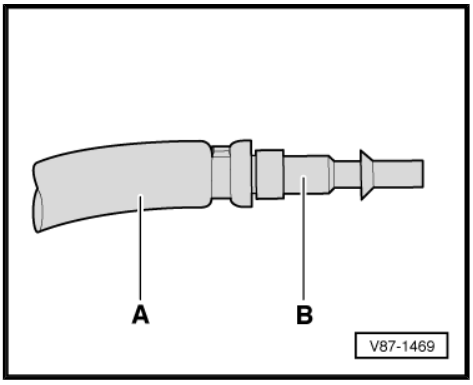

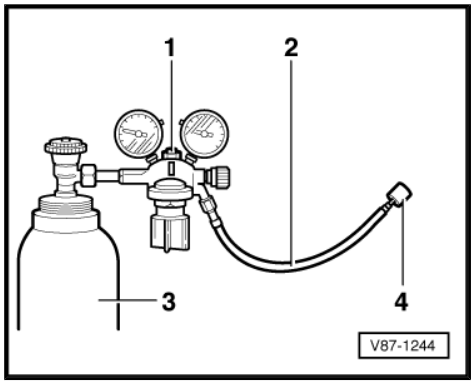

Note

- *If a major leak is suspected, do not fill the refrigerant circuit with the refrigerant R134a.*
- *If the leak is large enough, noise can be heard at the leak point which is produced by the escaping air or gas.*
- *The compressed air or the nitrogen enters via the service connection.*
- *The quick-coupling adapter for the service connections can be connected to the workshop compressed air system for example with a changed filling hose -A- (e.g. with a thread 5/8"-18 UNF, depending on the thread at the quick-coupling adapter) and with a suitable adapter -B-.*
- *Compressed air test - in addition use a combination fine-filter unit for the compressed-air system, oil, dirt and water separator (as is common for painting systems). It must be installed between the compressed-air system and the filling hose -A-.*
- *Nitrogen test - connect a compressed gas bottle -3- filled with nitrogen by means of a pressure gauge battery with pressure reducer for nitrogen (maximum reduced pressure: 15 bar) -1- via a filling hose -2- (e.g. with a thread 5/8"-18 UNF) to the service connection (on which a quick-coupling adapter for service connections has been connected) at the closed refrigerant circuit.*

– Slowly increase the pressure in the refrigerant circuit to max. 15 bar.

WARNING

- ***The maximum permissible working pressure is 15 bar.***
- ***For leak detection with nitrogen, only work with pressure reducer for nitrogen bottles.***
- ***Nitrogen may leak uncontrollably from the bottle.***

– It is possible to determine the leak point by the noise which occurs at the point where the gas (nitrogen) escapes or by applying a coat of soapy water to the leak point.

– Eliminate the leak.

Note

There must be no pressure in the refrigerant circuit before connecting to the A/C service station. The nitrogen and the compressed air must not enter the service bottle with the refrigerant R134a.

– After eliminating the leakage, connect an A/C service station and check the refrigerant circuit for tightness by performing a vacuum test.

– If a minor leak is suspected (according to the vacuum test), subsequently carry out a leak check using the leak detector - VAG1796-
⇒ “6.3 Detecting leaks on the refrigerant circuit with the leak detector VAG1796 ”, page 45 , if necessary the leak detection system - VAS 6196-
⇒ “6.4 Detecting leaks on the refrigerant circuit with the leak detector VAS 6196 or VAS 6201A ”, page 45 .

– The refrigerant circuit can only be filled once the leak check has been performed successfully.

6.3 Detecting leaks on the refrigerant circuit with the leak detector - VAG1796-

Minor leaks can be detected for example with an electronic leak detector or with an UV lamp.

Note

- *Refrigerant gas quickly floats away with the movement of the air. Therefore avoid any draught during leak detection.*
- *If the refrigerant circuit is absolutely empty, fill in approx. 100 grams of refrigerant.*

Leak detection:

– Operate the leak detector according to the relevant operating instructions.

– Always hold the test prod below the suspected leakage.

If the knocking noises increase or a whining tone occurs as a result of the design, the leak point has been found (see operating instructions belonging to the leak detector).

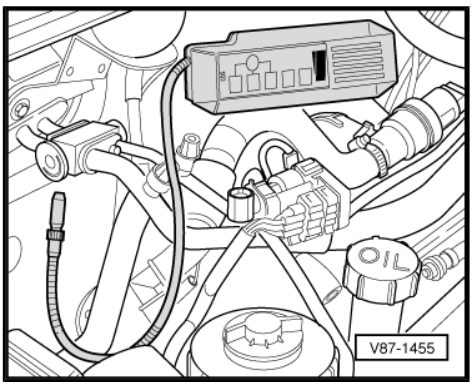

6.4 Detecting leaks on the refrigerant circuit with the leak detector - VAS 6196- or - VAS 6201A-

Minor leaks can be made visible with the fluorescent leak detection additive - VAS 6196/1- which is added to the refrigerant circuit.

Note

- *Depending on the size and the area of the leak, it might take several days until enough refrigerant oil escapes with the additive and the leak point becomes visible.*
- *In case of leaks on the evaporator, the additive is perhaps washed up by the condensation water and escapes through the condensation water drain. On most vehicles the evaporator is not accessible without extensive preliminary work, therefore if a test is carried out e.g. on the condensation water drain, leaks can be detected on the evaporator. To do so, the leak detection additive should be present in the refrigerant circuit for a lengthy period (several days).*
- *Refrigerant gas quickly floats away with the movement of the air. Therefore avoid any draught during leak detection.*
- *The leak detection additive can remain in the refrigerant circuit.*

Before commencing work, the information on how to operate the leak detection system can be obtained from the relevant operating instructions.

Leak detection system -VAS 6196-

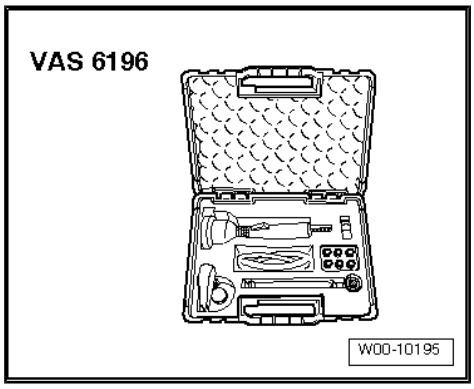

Leak detection system -VAS 6201A-

1 - Hand pump - VAS6201/1-

2 - Cartridge - VAS 6201/2-

3 - Cleaning agent - VAS 6201/3-

4 - UV leak detection lamp - VAS 6201/4-

5 - UV absorbing goggles - VAS 6201/6-

6 - Sticker - VAS 6201/7-

7 - Small tube - VAS 6201/8-

8 - Protective gloves - VAS 6201/9-

– Empty the refrigerant circuit with the aid of the A/C service station.

Note

If a larger leak is already found during the evacuation, locate it as described in
⇒ "6.2 Leak detection on the refrigerant circuit with compressed air or nitrogen", page 43 .

There is 15.4 ml of leak detection additive in the cartridge -A- (one unit -B- is equivalent to 2.5 ml).

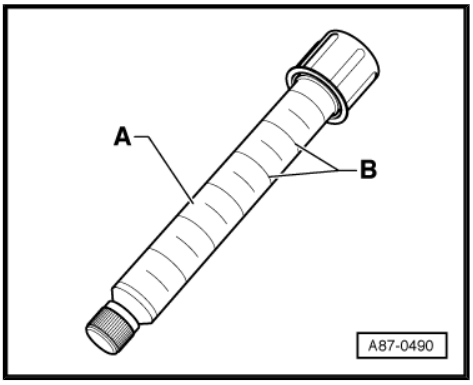

– Assemble the hand pump -1- with the cartridge -2-.

Pour in leak detection additive when the refrigerant circuit is empty

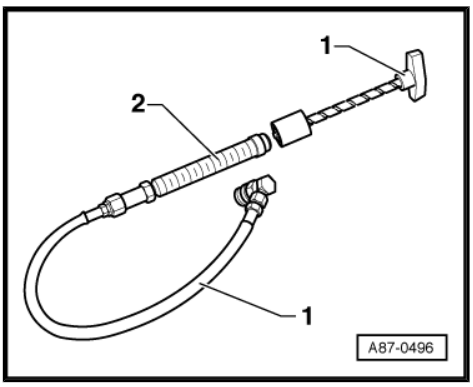

– When the refrigerant circuit is empty, the leak detection additive can be filled into the circuit through an opened connection.
– Open an easily accessible connection point on the refrigerant circuit.
– Cover the area around the connection point with foil or absorbant paper.
– Hold the small tube upwards.
– Screw in the toggle of the hand pump sufficiently until the leak detection additive flows out of the small tube.
– Fill 2.5 ±0.5 ml (millilitre = cm^3) of leak detection additive into the refrigerant circuit.

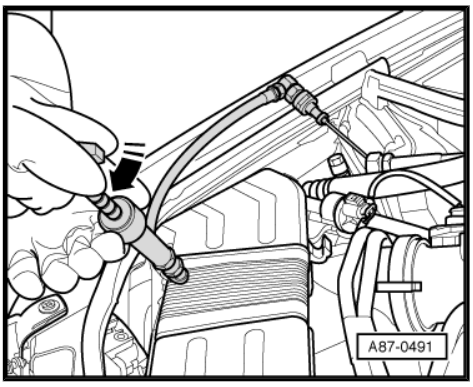

Note

If a leak-finding additive was already added to a refrigerant circuit from an earlier repair, note the following: Only add new leak-finding additive when replacing the refrigerant oil. If only part of the refrigerant oil was replaced, only a relative amount of leak detection additive must be replenished. If, for example, 100 ml of refrigerant oil was replaced on a vehicle with a 250 ml-capacity, only replenish with 1 ml (cm^3) of leak detection additive.

– Replace the O-rings on all opened connection points.
– Assemble the refrigerant circuit.

– Affix a sticker near the service connections with the note that leak detection additive was filled in this refrigerant circuit.

– Drain and re-fill the refrigerant circuit with the aid of the A/C service station.

– Start up the air conditioning system.

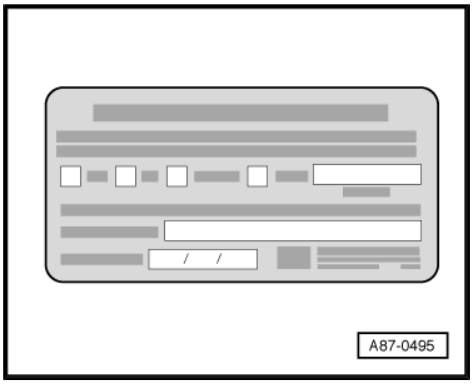

Note

The air conditioning system must be operated for at least 60 minutes so that the added additive is distributed throughout the refrigerant circuit (the AC compressor must run). Depending on the size of the leak, the leak point will already become visible within this period of time.

– Search for the leak on the refrigerant circuit using the UV leak detection lamp - VAS 6201/4- ⇒ page 50 .

Pour in leak detection additive when the refrigerant circuit is full.

Note

- *If a leak-finding additive was already added to a refrigerant circuit from an earlier repair, note the following: Only add new leak-finding additive when replacing the refrigerant oil. If only part of the refrigerant oil was replaced, only a relative amount of leak detection additive must be replenished. If, for example, 100 ml of refrigerant oil was replaced on a vehicle with a 250 ml-capacity, only replenish with 1 ml (cm^3) of leak detection additive.*
- *A small amount of leak detection additive remains in the service connection. Carefully remove the remaining amount so that it is not mistaken for a leak point during a subsequent leak detection.*

– Switch off the ignition.

– Remove the screw cap from the service connection on the low-pressure side of the refrigerant circuit.

Note

Make sure that the hose of the hand pump is completely filled with leak detection additive.

– Fit the quick coupling onto the service connection of the low-pressure side and open the service coupling by screwing in the handwheel. Hold the hose upwards and screw in the toggle of the hand pump sufficiently until the leak detection additive begins to flow out at the small tube.

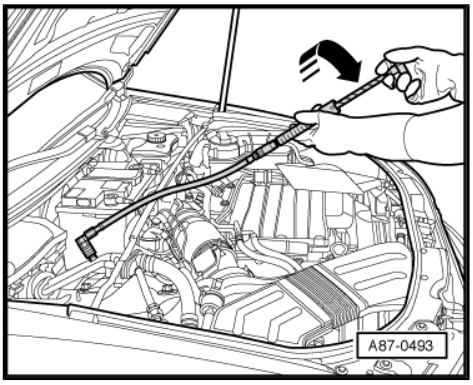

- Cover the area around the service connection on the vehicle with foil or absorbant paper.
- Fill 2.5 ±0.5 ml (millilitre = cm^3) of leak detection additive into the refrigerant circuit by screwing in the toggle of the hand pump.
- Close the service coupling and remove it from the service connection.
- Remove the residues of the leak detection additive from the service connection, e.g. using absorbent paper.
- Seal the service connection with the screw cap.
- If necessary, clean the surrounding area of the service connection with the cleaning agent.

– Affix a sticker near the service connections with the note that leak detection additive was filled in this refrigerant circuit.

– Start up the air conditioning system.

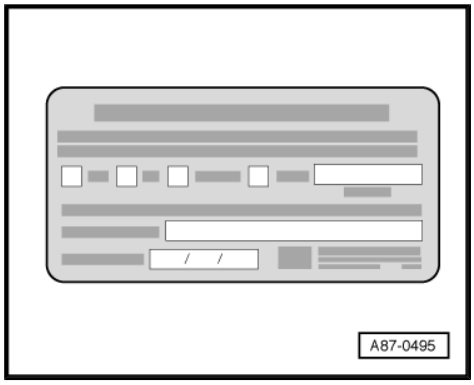

Note

The air conditioning system must be operated for at least 60 minutes so that the added additive is distributed throughout the refrigerant circuit (the AC compressor must run). Depending on the size of the leak, the leak point will already become visible within this period of time.

– Search for the leak on the refrigerant circuit using the UV leak detection lamp - VAS 6201/4- ⇒ page 50 .

Search for leaks on the refrigerant circuit using the UV leak detection lamp - VAS 6201/4-

WARNING

Do not stare into the UV lamp.

Do not point the UV lamp towards anybody.

Note

- *The air conditioning system must be operated for at least 60 minutes so that the added additive is distributed throughout the refrigerant circuit (the AC compressor must run). Depending on the size of the leak, the leak point will already become visible within this period of time.*
- *In case of leaks on the evaporator, the additive may be washed away with the condensation water and flows out via the condensation water drain. On most vehicles the evaporator is not accessible without extensive preliminary work, therefore if a test is carried out e.g. on the condensation water drain, this could provide an indication of a leaking evaporator. For this purpose, it is necessary that the additive has already been in the refrigerant circuit for a longer period of time.*
- *The protective goggles serve to protect the eyes as well as increase the luminosity of the additive when exposed to UV light.*
- *Depending on the accessibility of various components of the refrigerant circuit, it may be necessary to remove certain components of the vehicle (e.g. the bumper or the air filter).*

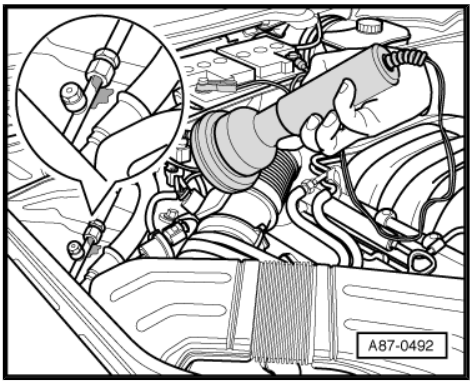

- Park the vehicle in a darker area of the workshop (in daylight or in case of strong lighting, the effect of the UV light is reduced).
- Check the accessibility of the various components of the refrigerant circuit and remove the parts in the surrounding area of the refrigerant circuit, which obstruct the view of the components of the refrigerant circuit (e.g. the cover for the noise insulation and the bumper).
- Always wear the safety goggles in order to protect your eyes.
- Connect the UV lamp to a 12-volt battery (vehicle battery). Pay attention to the correct polarity of the connections.
- Switch on the UV lamp and inspect the components of the refrigerant circuit. Points where refrigerant, refrigerant oil and thus leak detection additive leaks out, will glow under UV light (fluorescent).

Note

The leak detection additive can remain in the refrigerant circuit.

7 Removing contaminants from the refrigerant circuit

⇒ “7.1 Cleaning the refrigerant circuit with compressed air and nitrogen”, page 52

⇒ “7.2 Cleaning refrigerant circuit with refrigerant R134a (flush)”, page 54

⇒ “7.3 Principle circuit diagrams for different rinsing cycles”, page 58

⇒ “7.4 Adapter for setting up the rinsing cycles”, page 61

7.1 Cleaning the refrigerant circuit with compressed air and nitrogen

In order to remove impurities as well as aged refrigerant oil in a clean refrigerant-saving and environmentally friendly manner, without demanding installation, the refrigerant circuit is flushed out with refrigerant R134a or is blown through with compressed air and nitrogen.

Note

Blowing through the refrigerant circuit with compressed air and nitrogen requires considerably more work than flushing with refrigerant R134a. When flushing with refrigerant R134a, the cleaning of the components is better and more effective, one should therefore always flush if there is a problem.

The refrigerant circuit or the individual components must be blown through first with compressed air and then with nitrogen, if:

- it is not possible to flush the refrigerant circuit with the refrigerant R134a.
- dirt or other impurities has/have entered into the circuit.
- When evacuating a tight refrigerant circuit the vacuum gauge is not constant (there is humidity in the refrigerant circuit and builds up pressure)
- If the refrigerant circuit has been left open for longer than normally required for repairs (e.g. following an accident).
- If pressure and temperature measurements indicate that there is humidity in the refrigerant circuit
- There is any doubt about the oil volume in the refrigerant circuit.
- the A/C compressor needed to be replaced because of internal damage (in this case it is preferable to flush with refrigerant R134a ⇒ “7.2 Cleaning refrigerant circuit with refrigerant R134a (flush)”, page 54).
- required after replacing one of the components of the Workshop Manual.

Blowing through the refrigerant circuit

WARNING

- *Nitrogen may leak uncontrollably from the bottle.*
- *Only work with reduction valve for nitrogen cylinders (maximum working pressure: 15 bar).*
- *The gas mixture emanating from the components must be exhausted via a suitable exhaust system.*

Note

- *To ensure neither oil nor moisture is transferred from the compressed-air system into the refrigerant circuit, the compressed air must be led through a compressed-air cleaning system for cleaning and drying. For this use a filter and dryer for compressed air (scope of delivery as tool for paint work).*
- *The maximum working pressure when blowing through must not be greater than 15 bar, (if necessary also use a pressure reducer for compressed air).*
- *Use a suitable adapter to connect the pressure hose to the refrigerant circuit.*
- *The adapters must not damage the components of the refrigerant circuit.*
- *Remove the fluid reservoir with dessicator before blowing through the condenser (if possible).*
- *The evaporator must be blown through via the low-pressure line connection (large diameter) once the expansion valve or the throttle has been removed.*
- *Check expansion valve, replace if corroded or dirty.*
- *If there are dark, sticky deposits in the components that cannot be removed with compressed air, replace these components.*
- *Thin, light grey deposits on the inside do not hinder the operation of the components.*
- *Compressed air and nitrogen cannot be blown through the A/C compressor and the expansion valve or the throttle.*
- *Always blow through the components against the flow direction of the refrigerant.*

Work procedure

– Connect the changed filling hose with suitable adapters to the workshop compressed air system and connect the component to be blown through.

– Switch on the exhaust system and vacuum impurities and refrigerant oil with the suction hose.

– First blow through old refrigerant oil and dirt with compressed air.

– Blow through components with compressed air until no more dirt and refrigerant oil is expelled (e.g. check with absorbant paper or a white cloth).

– Connect the reduction valve with the nitrogen pressure hose to the nitrogen cylinder and “dehumidify” the individual components with nitrogen using the nitrogen pressure hose and the relevant adapters (exhaust system must be on).

– Replace the AC compressor or unscrew the drain plug from the removed AC compressor (replace O-ring⇒ Electronic Catalogue of Original Parts) and drain the remaining refrigerant oil. In order to speed up the evacuation of the refrigerant oil, turn the AC compressor with the clutch disk of the magnetic coupling by hand (disposal of used oil ⇒ “3 Legal texts and legal regulations”, page 33). Subsequently fill the volume of new refrigerant oil, which corresponds to the refrigerant oil volume in the original part AC compressor, into the removed AC compressor ⇒ Heating, Air Conditioning; Rep. gr. 87 .

Note

- *Draining off the oil from the A/C compressor is only possible through the filling opening, the A/C compressor must therefore be removed.*
- *Once no more refrigerant oil runs out of the A/C compressor; turn on the A/C compressor by hand and drain off residual oil.*

Replace the fluid reservoir with dessicator cartridge whenever the refrigerant circuit has been blown through and keep it closed as long as possible to prevent insofar as possible any humidity from penetrating into the dessicator cartridge.

7.2 Cleaning refrigerant circuit with refrigerant R134a (flush)

- In order to remove impurities (e.g. abrasion from defective A/C compressor) as well as used refrigerant oil in a clean refrigerant-saving and environmentally friendly manner, without demanding installation, the refrigerant circuit is flushed out with refrigerant R134a or is blown through with compressed air and nitrogen.

The refrigerant circuit must be flushed with refrigerant R134a, if:

- Dirt or other contaminations in the refrigerant circuit are present.
- When evacuating a tight refrigerant circuit the vacuum gauge is not constant (there is humidity in the refrigerant circuit and builds up pressure)
- If the refrigerant circuit has been left open for longer than normally required for repairs (e.g. following an accident).
- If pressure and temperature measurements indicate that there is humidity in the refrigerant circuit
- There is a doubt about the oil volume in the refrigerant circuit.
- The air conditioning compressor needed to be replaced because of internal damage (e.g. noise or no output)
- Required for the respective vehicle after replacing one of the components of the workshop manual

Special tools and workshop equipment required

- A/C service station with rinsing device - VAS 6456A- or -VAS 6380A- . For these A/C service stations, the auxiliary function “flush refrigerant circuit with cooling medium R134a” is available and the necessary flushing device for coolant circuits
- Adapter set for passenger vehicles - VAS 6338/1-

Preliminary work

– Drain refrigerant circuit.

– Remove AC compressor ⇒ Heating, Air Conditioning; Rep. gr. 87 .

– Remove catch pan/fluid reservoir with dessicator or only dessicator (specifically designed for vehicles) ⇒ Heating, Air Conditioning; Rep. gr. 87 and reconnect together with cable. To do so, use the adapter and the filling hose -VAS 6338/31- from the adapter case of the motor car set.

– Vehicles with expansion valve - remove expansion valve and install the adapter from the adapter case of the motor car set - VAS 6338/1- ⇒ “7.4 Adapter for setting up the rinsing cycles”, page 61 .

– Vehicles with throttle - remove throttle and always connect the refrigerant lines together.

Vehicles with expansion valve:

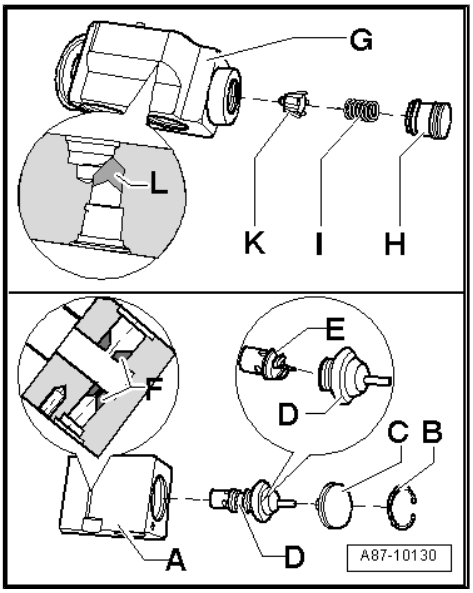

Note

- *If no suitable adapter for the expansion valve, see* *⇒ "7.4 Adapter for setting up the rinsing cycles", page 61* *, can be found in the adapter case of the motor car set - VAS 6338/1- , the removed expansion valve can be drilled out and in this way it can be used instead of the adapter (in most cases the old expansion valve is replaced after the flushing of the refrigerant circuit and thus it is no longer needed).*
- *During drilling operation, make absolutely sure that the sealing surfaces on the expansion valve are not damaged. The cooling medium could then leak when flushing.*
- *Before drilling out, remove the control element and drill out the expansion valve with a suitable drill (drill diameter e.g. 6 mm).*
- *The expansion valve is available in different versions with various designs. For the version -A- e.g. components -B-, -C- and -D- must be removed. Disconnect the component -E- (control element) from the component -D-. After this, use a suitable drill (diameter 6 mm) to drill out the expansion valve in range -F-.*
- *Remove components -H-, -I- and -K-, pressure rod on the version -G- and after this, use a suitable drill (diameter 6 mm) to drill out range -L-.*
- *Clean the drilled out expansion valve from machining residues (swarf).*
- *Re-install components -B-, -C- and -D- on version -A- or component -H- on version -G-.*

Refrigerant

- Check volume of refrigerant in the A/C service station, there must be at least 7 kg of refrigerant R134a.
- 30 min before the first purging process or switching on the heating for the middle refrigerant bottle located in the A/C service station (pressure in the middle refrigerant bottle increases) and before the first suctioning procedure switch off the heating again during the purging process.
- Empty the container for the used oil of the A/C service station.
- Connect the intake hose (high-pressure side) of the A/C service station to the low-pressure line which leads to the AC compressor with the aid of an adapter (cable with the larger diameter).
- Connect return-flow hose (low-pressure side or suction side) of the A/C service station to the outlet of the flushing device for the refrigerant circuits.
- Connect the inlet of the flushing device on the high pressure line to the AC compressor with the aid of an adapter (cable with smaller diameter).

Note

- *Adapter for setting up the rinsing cycles (specifically designed for vehicles)*
  ⇒ "7.4 Adapter for setting up the rinsing cycles", page 61 .
- *The components are always flushed through against the flow direction of the refrigerant when the air conditioning is in operation.*
- *When flushing, impurities get out of the refrigerant circuit into the flushing device and are retained in the filters and dessicators installed there. Depending on the impurities, these components must be changed within short periods of time according to the operating instructions of the A/C service station or the flushing device for refrigerant circuits.*
- *Depending on the type and intensity of the contamination of the flushed refrigerant circuit, the filter in the flushing device for refrigerant circuits must be replaced no later than after 5 to 10 flushing cycles (vehicles flushed thoroughly). If a very dirty refrigerant circuit is flushed out (the refrigerant oil from the refrigerant circuit is black and viscous or there is a lot of swarf in the refrigerant circuit) the filter is replaced after flushing the refrigerant circuit. If the refrigerant circuit is very dirty, it is also purposeful to once again flush the refrigerant circuit after changing the filter.*
- *Depending on the type of the contamination, dirt deposits itself (used refrigerant oil and abrasion from the AC compressor) on the inspection glass or the inspection glasses of the flushing device for refrigerant circuits. Clean the inspection glass or the inspection glasses after flushing and flush the refrigerant circuit once again using a purging process for inspection.*
- *The liquid refrigerant cannot be led through the expansion valve and the dessicator bag of certain fluid reservoirs with the required speed. These components must therefore be removed and replaced by adapters.*

– Switch on the A/C service station and flush the refrigerant circuit (a flushing cycle with three purging processes lasts approx. 1 to 1.5 hours).

Note

- *The flushing of a refrigerant circuit must be performed according to the operating instructions of the A/C service station.*
- *Depending on the version of the A/C service station, the container for the used oil contains approx. 125 cm^3 of used refrigerant oil. If a system with a greater refrigerant oil volume must be flushed, it may be required to empty the used oil reservoir after the first purging process of a flushing cycle.*
- *When flushing (up to minor residues can be neglected) the total refrigerant oil is washed out of the refrigerant circuit.*

– Observe the refrigerant which flows back out of the refrigerant circuit. Only when the refrigerant flows clear and completely colourless through the inspection glasses of the flushing device, the refrigerant circuit is clean.

The procedure of the purging process (the procedure is determined automatically according to the program of the A/C service station)

- After switching on, the rinsing cycle is first of all evacuated and while doing so the refrigerant circuit is tested for leaks (depending on the version of the A/C service station, manually moving forward is perhaps required see ⇒ operating instructions of the A/C service station).
- In the evacuated rinsing cycle, the corresponding specific volume of coolant (e.g. 4 kg) is filled in via the high-pressure side of the A/C service station (against the normal flow direction of the air conditioning and therefore on the low-pressure side of the refrigerant circuit of the vehicle). Depending on the version of the A/C service station, enough refrigerant is filled in until the rinsing cycle is completely filled with liquid refrigerant. This is determined in such a way that for a given period of time no more refrigerant can flow through.
- After topping up with the determined volume of refrigerant, for example, the heating of the flushing device for refrigerant circuits is switched on depending on the version of the A/C service station and the flushing device for refrigerant circuits (only if the refrigerant is drained off in gaseous condition from the flushing device for refrigerant circuits).
- After the refrigerant was drained off, the heating of the flushing device (if present) for the refrigerant circuits is switched off, the refrigerant circuit is again briefly evacuated depending on the version and after the evacuation, the refrigerant oil suctioned out of the refrigerant circuit is expelled out of the A/C service station.
- The procedure, fill with refrigerant, drain off (and evacuate) is repeated twice (altogether it is performed three times).

After completing the purging processes:

– Check the inspection glass or the inspection glasses of the flushing device. If dirty, clean the purging process in accordance with the operating instructions of the flushing device and once again perform a check of the purging process (it lasts only one purging process, about 30 minutes).

– Remove the connections to the A/C service station from the refrigerant circuit of the vehicle (there must not be any overpressure present in the refrigerant circuit, if necessary briefly evacuate the refrigerant circuit once again).

– Replace throttle and catch pan/fluid reservoir with dessicator or only dessicator (specifically designed for vehicles).

– Vehicles with expansion valve - Check expansion valve, replace if dirty or corroded.

– Depending on the fault:

• Replace the AC compressor or unscrew the drain plug from the removed AC compressor (replace O-ring⇒ Electronic Catalogue of Original Parts) and drain the remaining refrigerant oil. In order to speed up the evacuation of the refrigerant oil, turn the AC compressor with the clutch disk of the magnetic coupling by hand (disposal of used oil ⇒ “3 Legal texts and legal regulations”, page 33). Subsequently fill the volume of new refrigerant oil, which corresponds to the refrigerant oil volume in the original part AC compressor, into the removed AC compressor ⇒ Heating, Air Conditioning; Rep. gr. 87 .

Note

In the original part AC compressor there is a certain determined refrigerant oil volume.

– Completely assemble again the refrigerant circuit, evacuate and fill.

– Set the air conditioning again to operate and perform a functional test.

7.3 Principle circuit diagrams for different rinsing cycles

Note

- *The arrows in the following figures point towards the flow direction of the refrigerant when flushing (the refrigerant flows out against the flow direction in the air conditioning when flushing, therefore the high-pressure side of the A/C service station is connected to the low-pressure connection of the refrigerant circuit to the AC compressor).*
- *Adapter for setting up the rinsing cycles (specifically designed for vehicles)*
  ⇒ "7.4 Adapter for setting up the rinsing cycles", page 61 .

Refrigerant circuit with expansion valve and fluid reservoir

Note

The expansion valve is removed and is replaced by an adapter. The fluid reservoir must be removed depending on the vehicle and the line connections to the fluid reservoir must connect with each other using two adapters and a filling hose.

1 - A/C service station

- ❑ With electronics and a program for flushing or with a flushing device.
- ❑ If an A/C service station without a program for flushing is used, the procedure must be performed manually (evacuate, flush three times, at least 4 kg each time and drain the refrigerant again).

2 - Refrigerant hoses on the A/C service station

- ❑ From the high-pressure side of the A/C service station (usually red in colour) to the connection for the low-pressure side of the AC compressor (larger diameter).

3 - Adapter to connection for the low-pressure side

- ❑ Different versions depending on the vehicle.
- ❑ From the adapter case of the motor car set - VAS 6338/1- .

4 - Connection of the low-pressure side on the refrigerant circuit to the A/C compressor

- ❑ Different versions depending on the vehicle.

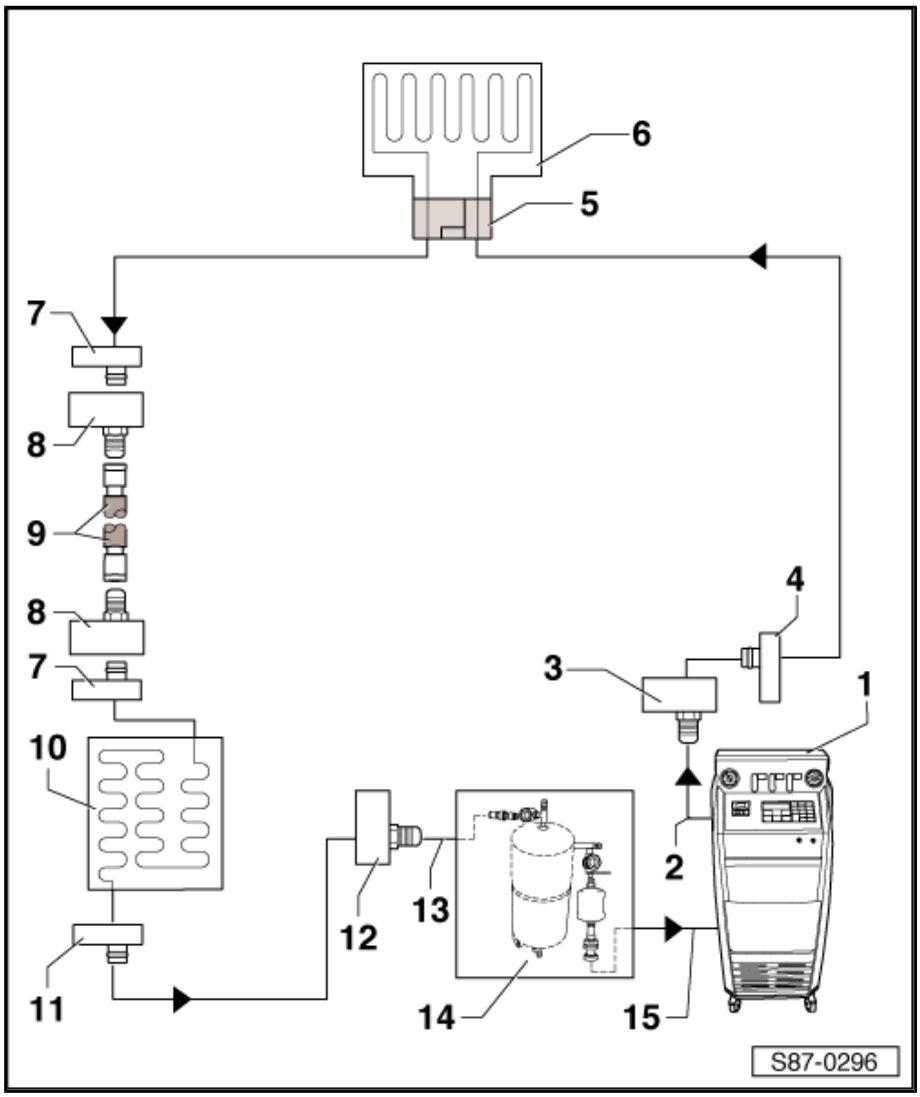

5 - Adapter for the installed expansion valve

- ❑ Different versions depending on the vehicle.
- ❑ From the adapter case of the motor car set -VAS 6338/1- .

6 - Evaporator

7 - Connection to the fluid reservoir

- ❑ Different versions depending on the vehicle.
- ❑ Not available on vehicles with a dessicator cartridge in the fluid reservoir at the condenser or with a fluid reservoir installed in the condenser.

8 - Adapter for bridging the removed fluid reservoir

- ❑ Not required on all vehicles (see the above-mentioned point).
- ❑ Different versions depending on the vehicle.
- ❑ From the adapter case of the motor car set -VAS 6338/1- .

9 - Filling hose for refrigerant

- ❑ From the adapter case of the motor car set -VAS 6338/1- .

10 - Condenser

- ❑ If a fluid reservoir with dessicator cartridge is installed at the condenser, the dessicator cartridge must be removed (close again after removing fluid reservoir at or in the condenser).

11 - Connection of the high-pressure side on the refrigerant circuit to the A/C compressor

- ❑ Different versions depending on the vehicle.

12 - Adapter to connection for the high-pressure side of the refrigerant circuit

- ❑ Different versions depending on the vehicle.
- ❑ From the adapter case of the motor car set -VAS 6338/1- .

13 - Filling hose of flushing device for the refrigerant circuits

- ❑ From connection to high-pressure side of the A/C compressor in the refrigerant circuit (smaller diameter) to inlet of flushing device for the refrigerant circuits.

14 - Flushing device for the refrigerant circuits

- ❑ E.g -VAS 6456A- or -VAS 6338A- (different versions and different structures).
- ❑ With filter, inspection glass, safety valve, heating, refrigerant reservoir etc. (depending on the version).
- ❑ Depending on the structure of the A/C service station and the flushing device for the refrigerant circuits, a non-return valve can be installed on the outlet of the flushing device for the refrigerant circuits (in order to ensure the correct flow direction of the refrigerant when flushing).

15 - Refrigerant hoses on the A/C service station

- ❑ From the low-pressure side of the A/C service station (usually blue in colour) to the outlet of the flushing device for the refrigerant circuits.

Refrigerant circuit with throttle and catch pan

Note

The throttle is removed and the refrigerant pipes are assembled again. The catch pan is also removed and the line connections to the reservoir are connected together again. To do so, use the adapter and the filling hose from the adapter case of the motor car set -VAS6338/31- , see
⇒ "7.4 Adapter for setting up the rinsing cycles", page 61 .

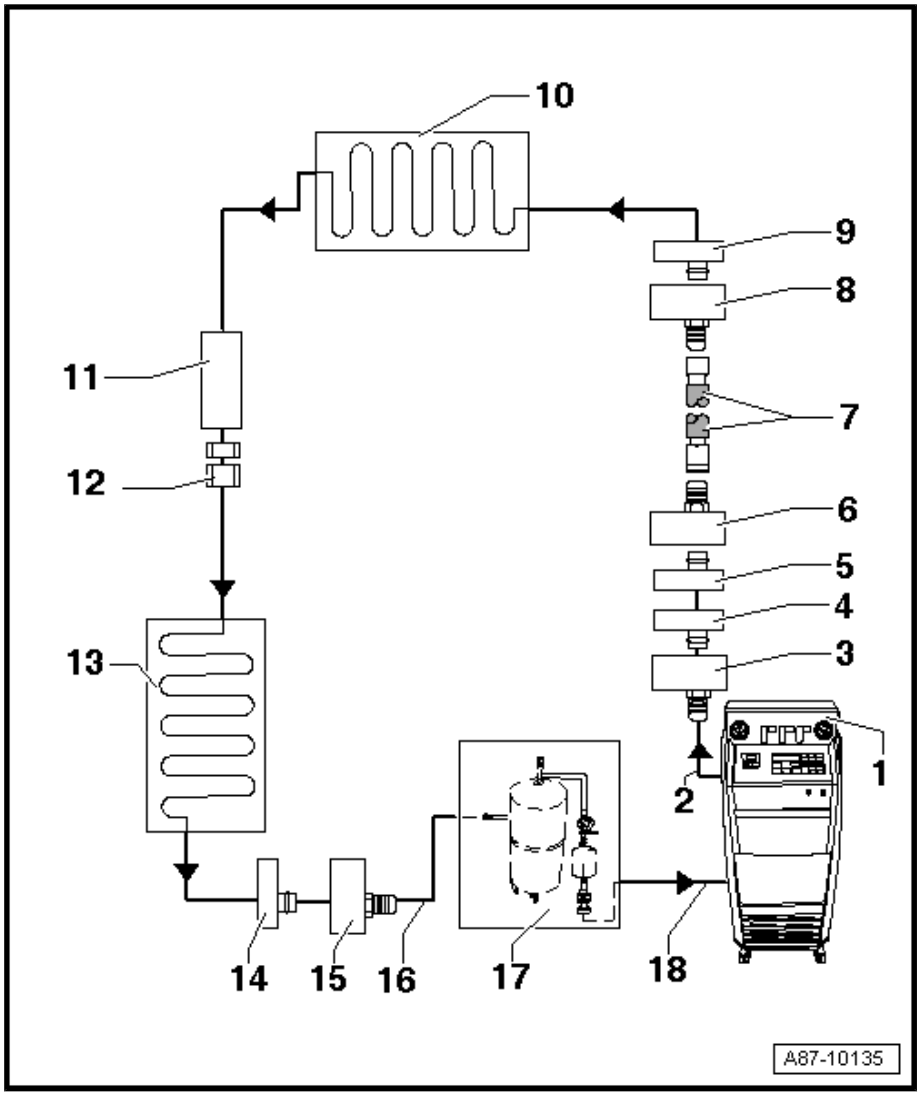

1 - A/C service station

- ❑ with electronics and a program for flushing or with a flushing device
- ❑ If an A/C service station without a program for flushing is used, the procedure must be performed manually (evacuate, flush three times, at least 4 kg each time and drain the refrigerant again).

2 - Refrigerant hoses on the A/C service station

- ❑ From the high-pressure side of the A/C service station (usually red in colour) to the connection for the low-pressure side of the AC compressor (larger diameter).

3 - Adapter to connection for the low-pressure side

- ❑ different versions depending on the vehicle
- ❑ from the adapter case of the motor car set -VAS 6338/1-

4 - Connection of the low-pressure side on the refrigerant circuit to the A/C compressor

- ❑ different versions depending on the vehicle

5 - Connection to the catch pan

6 - Adapter for bridging the removed catch pan

- ❑ from the adapter case of the motor car set -VAS 6338/1-

7 - Filling hose for refrigerant

- ❑ from the adapter case of the motor car set -VAS 6338/1-

8 - Adapter for bridging the removed catch pan

- ❑ from the adapter case of the motor car set -VAS 6338/1-

9 - Connection to the catch pan

10 - Evaporator

11 - Fitting location of the throttle

- ❑ the throttle is removed
- ❑ Removing and installing the throttle ⇒ Heating, Air Conditioning; Rep. gr. 87

12 - Screwed connection in the refrigerant line

- ❑ screw together again after the removal of the throttle

13 - Condenser

14 - Connection of the high-pressure side on the refrigerant circuit to the A/C compressor

15 - Adapter to connection for the high-pressure side of the refrigerant circuit

- ❑ from the adapter case of the motor car set -VAS 6338/1-

16 - Filling hose of flushing device for the refrigerant circuits

- ❑ from the connection to the high-pressure side of the AC compressor on the refrigerant circuit (smaller diameter) to inlet of flushing device for the refrigerant circuits

17 - Flushing device for the refrigerant circuits

- ❑ with filter, inspection glass, safety valve, heating, refrigerant reservoir etc. (depending on the version)
- ❑ Depending on the structure of the A/C service station and the flushing device for the refrigerant circuits, a non-return valve can be installed on the outlet of the flushing device for the refrigerant circuits (in order to ensure the correct flow direction of the refrigerant when flushing).

18 - Refrigerant hoses on the A/C service station

- ❑ From the low-pressure side of the A/C service station (usually blue in colour) to the outlet of the flushing device for the refrigerant circuits.

7.4 Adapter for setting up the rinsing cycles

- ♦ The table below lists various adapters which are necessary for connecting the A/C service station to the refrigerant circuit, flushing and bridging the removed fluid reservoir or catch pan and the expansion valve (specifically designed for vehicles).
- ♦ If a flushed refrigerant circuit is not reassembled immediately after flushing, leave the adapters on the connections and close the connections on the adapters with the screw caps (from the adapter case of the motor car set - VAS 6338/1-).

Note

The work procedures of the installation work for condensers, dessicators, strainers, expansion valves etc. are described in the Workshop Manual ⇒ Heating, Air Conditioning; Rep. gr. 87 .

Fabia; Fabia II; Fabia III; Roomster

Vehicle	Adapters for the connections to the AC compressor	Condensor with integrated reservoir with dessicator	Miscellaneous
Fabia; Fabia II; Fabia III; Roomster; Rapid	♦ High-pressure side (except 6Q0 820 808) adapter -VAS6338/3- ♦ High-pressure side - A/C compressors 6Q0 820 808 - adapter - VAS6338/2- ♦ Low-pressure side - adapter -VAS6338/12-	– Before flushing remove the dessicator cartridge, on the condensers “Modine” also the strainer and the container. – After the flushing, install a new dessicator cartridge and a strainer (condensers Modine).	– Replace expansion valve with adapter -VAS6338/34- or a reworked (drilled out) expansion valve, see ⇒ “7.2 Cleaning refrigerant circuit with refrigerant R134a (flush)”, page 54 . – Check expansion valve after flushing (corrosion, dirt), replace if necessary.

Citigo

Vehicle	Adapters for the connections to the AC compressor	Condensor with integrated reservoir with dessicator	Miscellaneous
Citigo	♦ Adapter -VAS6338/3- high-pressure side ♦ Adapter -VAS6338/12- low-pressure side	– Flush circuit with reservoir with dessicator. – Install a new reservoir with dessicator after flushing.	– Replace expansion valve with adapter -VAS6338/36- or a reworked (drilled out) expansion valve, see ⇒ “7.2 Cleaning refrigerant circuit with refrigerant R134a (flush)”, page 54 . – Check expansion valve after flushing (corrosion, dirt), replace if necessary.

Octavia I

Vehicle	Adapters for the connections to the AC compressor	Adapter for bridging the reservoir with dessicator	Miscellaneous
Octavia I	♦ Adapter -VAS6338/2- high-pressure side ♦ Adapter -VAS6338/7- low-pressure side	– Remove reservoir with dessicator. ♦ 2 times adapter -VAS6338/2- ♦ connect with hose -VAS6338/31- – Install a new reservoir with dessicator after flushing.	– Replace expansion valve with adapter -VAS6338/19- or a reworked (drilled out) expansion valve, see ⇒ “7.2 Cleaning refrigerant circuit with refrigerant R134a (flush)”, page 54 . – Check expansion valve after flushing (corrosion, dirt), replace if necessary.

Octavia II

Vehicle	Adapters for the connections to the AC compressor	Condensor with reservoir with dessicator	Miscellaneous
Octavia II	♦ Adapter -VAS6338/3- high-pressure side ♦ Adapter -VAS6338/12- low-pressure side	– Condensers “DENSO” with firmly integrated reservoir with dessicator - two procedures are possible: ♦ First procedure - remove condenser and connect the connections with adapter -VAS6338/4- , -VAS6338/3- and connecting hose -VAS6338/31- . The adapter -VAS6338/3- must be reworked by making (milling) an additional hole [1]. ♦ Second procedure - unscrew screw cap from reservoir with dessicator, carefully remove the dessicator cartridge and then the strainer below the dessicator cartridge using a wire with hook. Screw in the screw cap again and flush the circuit with condensor. Install a new condensor with reservoir with dessicator after flushing. – Condensors “SHOWA” with replaceable reservoir with dessicator: ♦ Flush circuit with reservoir with dessicator. ♦ Replace reservoir with dessicator after flushing. – Condensors “Modine” with firmly integrated reservoir with dessicator: ♦ Remove dessicator bag and strainer from the reservoir. Screw in the screw cap again and flush the circuit with condensor. After the flushing, install a new dessicator cartridge and a strainer.	– Replace expansion valve with adapter -VAS6338/18- or a reworked (drilled out) expansion valve, see ⇒ “7.2 Cleaning refrigerant circuit with refrigerant R134a (flush)”, page 54 . – Check expansion valve after flushing (corrosion, dirt), replace if necessary.

Octavia III

Vehicle	Adapters for the connections to the AC compressor	Adapter for bridging the reservoir with dessicator	Miscellaneous
Octavia III	♦ Adapter -VAS6338/3- high-pressure side ♦ Adapter -VAS6338/12- low-pressure side	– Remove dessicator bag and strainer from the reservoir. Screw in the screw cap again and flush the circuit with condensor. After the flushing, install a new dessicator cartridge and a strainer.	– Replace expansion valve with adapter -VAS6338/38- or a reworked (drilled out) expansion valve, see ⇒ "7.2 Cleaning refrigerant circuit with refrigerant R134a (flush)", page 54 . – Check expansion valve after flushing (corrosion, dirt), replace if necessary.

[1] Rework adapter -VAS6338/3- :

– In order to connect the adapter -VAS6338/3- at the connection to the condensor, it must be reworked by making (milling) an additional hole -A- according to the figure (the dimensions in the figure are given in mm).

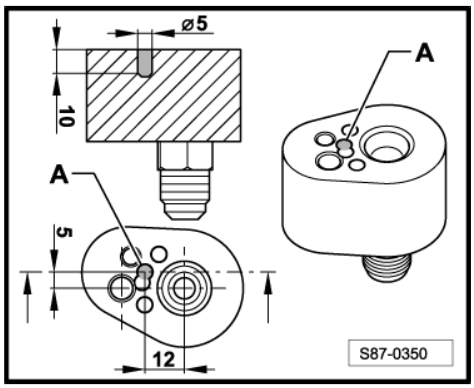

Note

♦ *Use an upright drilling machine for drilling, if necessary use a hand-held power drill in a stand and tension the adapter in a vice.*

♦ *For better guidance of the drill, predrill the bore with a smaller drill ∅3 mm.*

Superb

Vehicle	Adapters for the connections to the AC compressor	Adapter for bridging the reservoir with dessicator	Miscellaneous
Superb	♦ Adapter -VAS6338/2- high-pressure side ♦ Adapter -VAS6338/12- low-pressure side	– Remove reservoir with dessicator. ♦ 2 times adapter -VAS6338/10- ♦ connect with hose -VAS6338/31- – Install a new reservoir with dessicator after flushing.	– Remove throttle and reassemble coolant pipe. – Install a new throttle after flushing.

Superb II; Yeti

Vehicle	Adapters for the connections to the AC compressor	Condensor with reservoir with dessicator	Miscellaneous
Superb II; Yeti	♦ Adapter -VAS6338/3- high-pressure side ♦ Adapter -VAS6338/12- low-pressure side	– Condensors “SHOWA” with replaceable reservoir with dessicator: ♦ Flush circuit with reservoir with dessicator. ♦ Replace reservoir with dessicator after flushing. – Condensors “Modine” with firmly integrated reservoir with dessicator: ♦ Remove dessicator bag and strainer from the reservoir. Screw in the screw cap again and flush the circuit with condensor. After the flushing, install a new dessicator cartridge and a strainer.	– Replace expansion valve with adapter -VAS6338/18- or a reworked (drilled out) expansion valve, see ⇒ “7.2 Cleaning refrigerant circuit with refrigerant R134a (flush)”, page 54 . – Check expansion valve after flushing (corrosion, dirt), replace if necessary.

8 Complaints

⇒ “8.1 Possible complaints”, page 66

⇒ “8.2 Temperature test of cooling capacity”, page 67

⇒ “8.3 Odour from the heating and air conditioning unit”, page 68

8.1 Possible complaints

Note

*For all complaints marked with an **
⇒ “9 Check the pressure in the refrigerant circuit (with the A/C service station)”, page 71 .

- The cooling system has failed completely.*
- Insufficient cooling capacity for all vehicle speeds or engine speeds.*
- No cooling or insufficient cooling after a few kilometres of driving.*
- The AC compressor, the air conditioner magnetic coupling - N25- or the regulating valve for compressor of air conditioning system - N280- are switched off, due to a too high or too low pressure, by a low pressure switch for air conditioning system - F73- , , the high pressure switch for magnetic coupling - F118- , the air conditioner pressure switch - F129- or from the Climatronic control and display unit for air conditioner - E87- , or the Climatronic control unit - J255- .*
- No or a strong decrease of fresh air supply after a few kilometres of driving (evaporator iced up).*
- Odour from the heating and air conditioning unit
  ⇒ “8.3 Odour from the heating and air conditioning unit”, page 68

In addition, the following complaints may still arise:

The air conditioning compressor makes noises

– Tighten the fixing screws for the AC compressor and the AC compressor bracket with a torque wrench.

– Check the routing of the coolant pipes, they must not be flush with other components and must be installed free of tension (align if necessary).

Immediately after switching on the air conditioning system and/or when cornering or braking, noises occur (refrigerant hammering):

– Drain refrigerant circuit, evacuate and fill again (too much refrigerant in the circuit).

Note

- *This complaint may also arise if there is too much refrigerant oil in the circuit (when changing the AC compressor, for example the refrigerant oil volume was not adapted). For this complaint, the refrigerant circuit must be flushed with refrigerant R134a.*
- *The refrigerant oil must be drained out of the AC compressor via the oil drain plug (replace O-ring ⇒ Electronic Catalogue of Original Parts). In order to facilitate this, the V-ribbed belt pulley or the clutch disc of the magnetic coupling must be turned by hand on the AC compressor. Then, the refrigerant circuit must be filled with refrigerant oil to its total filling capacity according to the vehicle-specific workshop manual ⇒ Heating, Air Conditioning; Rep. gr. 87 (min. 70 grams directly in the AC compressor).*

On an air conditioning system which otherwise functions perfectly, water sprays out of the vents (the dash panel or in the footwell):

- Check the perfect laying of the condensation water drain, it must not be crimped or bent.
- Check the condensation water drain valve, it must not stick with wax or underbody sealant and must properly open and close.
- Check the plenum chamber cover, it must not be damaged and must be installed correctly (no water may flow into the evaporator).
- Check the water drainage openings of the plenum chamber, they must not be blocked (e.g. through leaves).

8.2 Temperature test of cooling capacity

- Measure the ambient temperature.
- Close the front flap, windows and sliding roof.
- Open all dash panel vents.
- Position the air distribution to person flow.
- Insert the measuring tip of the temperature probe -2- in the middle -1- of the dash panel vents in the indicated area (vehicle-specific) -3-, in such a way that it is located at least 20 mm behind the fins of the vents.
- Start engine.
- Switch on the air conditioning system and set to maximum refrigerating capacity, see ⇒ "9.1 Test requirements before the pressure test", page 71 .
- Increase and maintain engine speed at 2000 rpm.

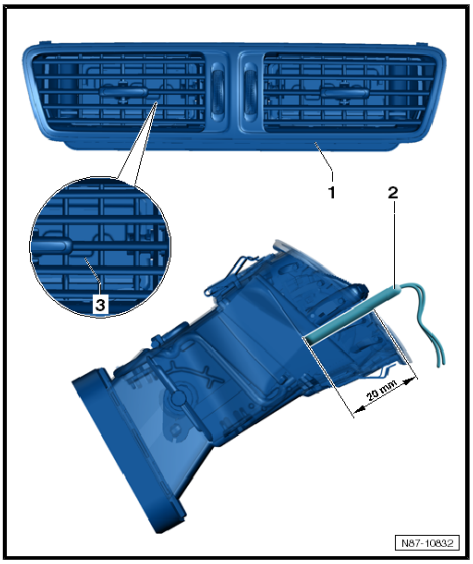

Note

Start of time measurement (5 min).

Evaluate

After 5 minutes, the temperature of the air flow from the vents must be within the tolerance (see diagram) depending on the ambient temperature.

A - Temperature of the air flow from the vents

B - Ambient temperature

C - Permissible tolerance range

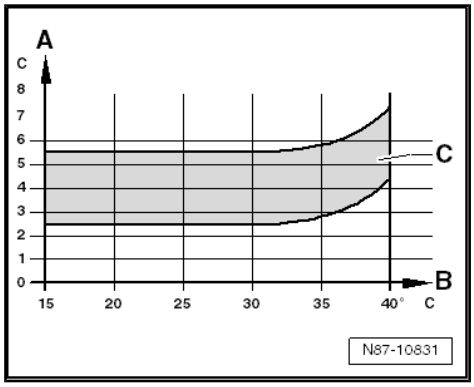

Note

When measuring, the ⇒ Vehicle diagnostic tester, function - cooling capacity of the air conditioning system (Climatronic) or in the measured value block - temperature in the vent outlets, can also be used (not valid for manual air-conditioning unit).

8.3 Odour from the heating and air conditioning unit

⇒ "8.3.1 Possible odours coming from the heating and air conditioning unit", page 68

⇒ "8.3.2 Spray evaporator with compressed air pistol VAG 1538 with spray nozzle", page 69

⇒ "8.3.3 Ultrasonic air conditioning system cleaning device VAS 6189B ", page 69

8.3.1 Possible odours coming from the heating and air conditioning unit

♦ Fishy odour

– Due to leaktightness at the cooling system of the engine or the heat exchanger in the heating and air conditioning unit.

Note

If a weak fishy odour can be detected when the temperature is set to "cold" or a stronger odour occurs when the temperature is set to "warm", check the heat exchanger for leaktightness.

♦ Odours after the clutch is burnt

♦ Evaporations from footmats, subsequently fitted protective seat covers etc.

♦ Foul, mouldy odour

– Due to accumulation and deposit of leaves, tree needles, etc. in the plenum chamber.

Note

Clean plenum chamber.

– Use water which cannot drain out the plenum chamber.

Note

Check water drainage openings in plenum chamber.

- Odour from the heating and air conditioning unit

Note

Odours which can occur in the heating and air conditioning unit, can be detected in the fresh as well as re-circulating air mode.

– Due to excessive condensation water in the heating and air conditioning unit.

Note

Check condensation water drain ⇒ Heating, Air conditioning; Rep. gr. 87 .

– Caused by old or heavily soiled dust and pollen filters.

Note

Check dust and pollen filter and replace if necessary ⇒ Heating, Air Conditioning; Rep. gr. 80 or ⇒ Rep. gr. 87 ⇒ Rep. gr. 87 .

– Due to deposits on the fins of the evaporator.

Note

- *Numerous methods for cleaning the heating and air conditioning unit, which differ in their use and effect, are offered on the market.*
- *Cleaning the evaporator, see ⇒ "8.3.2 Spray evaporator with compressed air pistol VAG 1538 with spray nozzle", page 69 where necessary ⇒ "8.3.3 Ultrasonic air conditioning system cleaning device VAS 6189B ", page 69*
- *When cleaning, proceed according to the enclosed instruction.*

Currently offered equipment to clean the evaporator ⇒ Workshop Equipment catalogue .

8.3.2 Spray evaporator with compressed air pistol - VAG 1538- with spray nozzle

The evaporator is sprayed directly with Contra Sept with the spray nozzle. Aero-Clean neutralises the germs and bacteria directly on the evaporator.

To enable access to the evaporator, various spray nozzles are necessary, e.g.: -VAG 1538/8- or -VAG 1538/9- .

A purifier is enclosed for evaporator D 600 100 A2 with the guide for the corresponding vehicle.

Current devices and spray nozzles ⇒ Workshop Equipment catalogue .

8.3.3 Ultrasonic air conditioning system cleaning device - VAS 6189B-

– The ultrasonic air conditioning system cleaning device - VAS 6189B- is placed in the footwell on the front passenger side and atomises the Aeroclean agent. Aeroclean neutralises the

germs and bacteria which contaminate the heating and air conditioning unit.

The operating instructions is enclosed together with the unit.

9 Check the pressure in the refrigerant circuit (with the A/C service station)

⇒ “9.1 Test requirements before the pressure test”, page 71

⇒ “9.2 Check pressures”, page 72

⇒ “9.3 Continuation of the test depending on the arrangement of the refrigerant circuit”, page 74

⇒ “9.4 Pressure test for vehicles with throttle and catch pan (with AC compressor regulated from the inside)”, page 74

⇒ “9.5 Pressure test for vehicles with expansion valve and fluid reservoir (with AC compressor regulated from the inside)”, page 78

⇒ “9.6 Pressure test for vehicles with expansion valve, fluid reservoir and with regulating valve for compressor of air conditioning system N280 (with AC compressor regulated from the outside)”, page 83

9.1 Test requirements before the pressure test

- The radiator and condenser are clean (if necessary clean).
- The heat-protection insulation on the expansion valve is O.K. and is correctly mounted. See vehicle-specific Workshop Manual ⇒ Heating, Air Conditioning; Rep. gr. 87 .
- The V-ribbed belts for AC compressor and AC generator are O.K. and are correctly tensioned.
- All the air guides, covers and seals are O.K and are correctly mounted.
- No fault has been detected on the electrical system, the vacuum system and the air guide with the fault finding ⇒ Vehicle diagnostic tester, ⇒ Current flow diagrams, Electrical fault finding and Fitting locations and ⇒ Heating, Air Conditioning; Rep. gr. 87 .
- The self-diagnosis of the air conditioning system (e.g. with the ⇒ Vehicle diagnostic tester) does not detect any fault, no switch-off condition of the AC compressor is displayed in the measured value block (only for vehicles with air conditioning system self-diagnosis).
- The air flow rate through the dust and pollen filter is not impaired by contamination. See vehicle-specific Workshop Manual ⇒ Heating, Air Conditioning.; Rep. gr. 87 ⇒ Rep. gr. 87
- The heating and air conditioning unit does not draw any secondary air at the highest fresh air blower speed.
- The air guide flaps in the heating and air conditioning unit, in the heating and in the evaporator reach their final setting. See vehicle-specific Workshop Manual ⇒ Heating, Air Conditioning; Rep. gr. 87 .
- The fresh air intake ducts under the front flap and in the passenger compartment as well as the related water drain valves are O.K. see vehicle-specific workshop manual⇒ Heating, Air Conditioning; Rep. gr. 87 .
- Engine is at operating temperature.
- The vehicle is not exposed to the sun's rays.
- The ambient temperature is higher than 15°C.
- All the dash panel vents are opened.

- While the engine is running and with the air conditioning system set to maximum cooling capacity:

Set maximum cooling capacity of the air conditioning system

Setting on the control and display unit for air conditioner Climatronic - E87- :

– Pre-select operating mode “auto” (AC compressor switched on).

– Set temperature pre-selection “LO” for driver and passenger side.

Setting on the manual heater control, air conditioner Climatic:

– “AC” and re-circulating button pressed.

– Temperature rotary switch is positioned on stop “cold”.

– Rotary switch for fresh air blower - V2- on position “4”.

- If the radiator fan (if the fans run) runs -V7- (min. in stage 1).

Note

On certain versions, the fan is only switched on after the pressure in the refrigerant circuit has exceeded a given value.

- The AC compressor is indeed driven (air conditioner magnetic coupling - N25- is closed, it is possible that the existing belt protection in the AC compressor belt pulley is not damaged).

9.2 Check pressures

– Switch off ignition.

– Connect A/C service station
⇒ “5 Working with the A/C service station”, page 36

– Read the pressures on the pressure gauges, they can show two results:

♦ The pressure in the refrigerant circuit is lower than given in the table.

♦ The pressure in the refrigerant circuit corresponds to what is given in the table or is higher.

Ambient temperature (in Celsius)	Pressure in the refrigerant circuit in bar overpressure
+15°C	3.9
+20°C	4.7
+25°C	5.6
+30°C	6.7
+35°C	7.8
+40°C	9.1
+45°C	10.5

Note

- *The temperature of the components of the refrigerant circuit should be equal to the ambient temperature (if individual components of the refrigerant circuit are warmer or colder, the pressure deviates from the values in the table).*
- *At absolute pressure, 0 bar corresponds to an absolute vacuum. The normal ambient pressure (overpressure) corresponds to 1 bar absolute pressure. On the scales of most pressure gauges, 0 bar corresponds to an absolute pressure of one bar (recognizable by the indication -1 bar below 0).*
- *On vehicles with high pressure sender - G65- , on which the measured pressure is displayed in the measured value block, the measured pressure should correspond to the values in the table.*

The measured pressure in the refrigerant circuit is lower than the pressure indicated in the table:

Too little refrigerant in the circuit.

- Detecting leaks on the refrigerant circuit
  ⇒ “6 Leak detection on the refrigerant circuit”, page 42 .
- Check pressure relief valve
  ⇒ “2.1.10 Pressure relief valve”, page 21 .

If the pressure relief valve is drained:

- Check the radiator fan actuation.
- Check coolant pipes and refrigerant hoses for cross-sectional constrictions, for too small bending radii.
- Check coolant pipes and coolant hoses for external damage.
- If no fault is found, clean refrigerant circuit
  ⇒ “7 Removing contaminants from the refrigerant circuit”, page 52 .

The pressure in the refrigerant circuit corresponds to what is given in the table or is higher:

- Start the engine.
- Set air conditioning system to maximum refrigerating capacity
  ⇒ page 72 .

Note

On vehicles with regulating valve for compressor of air conditioning system - N280- , the control current can be read in the measured value block ⇒ Vehicle diagnostic tester

If the AC compressor is not driven while the engine is running or the regulating valve is not actuated (compressor specific):

- The cause, for example, can be determined and eliminated by interrogating the event memory of the air conditioning system ⇒ Vehicle diagnostic tester
- Test the voltage supply for the air conditioner magnetic coupling - N25- if it is O.K., repair magnetic coupling.
- Check the actuation of the regulating valve for compressor of air conditioning system - N280- ⇒ Vehicle diagnostic tester

Note

The regulating valve for compressor of air conditioning system - N280- is actuated by the control and display unit for air conditioner Climatronic - E87- or by the Climatronic control unit - J255- ⇒ Vehicle diagnostic tester

– Continuation of the test depending on the arrangement of the refrigerant circuit
⇒ "9.3 Continuation of the test depending on the arrangement of the refrigerant circuit", page 74 .

9.3 Continuation of the test depending on the arrangement of the refrigerant circuit

- Pressure test for vehicles with throttle and catch pan (with AC compressor regulated from the inside)
⇒ "9.4 Pressure test for vehicles with throttle and catch pan (with AC compressor regulated from the inside)", page 74 .
- Pressure test for vehicles with expansion valve and fluid reservoir (with AC compressor regulated from the inside)
⇒ "9.5 Pressure test for vehicles with expansion valve and fluid reservoir (with AC compressor regulated from the inside)", page 78 .
- Pressure test for vehicles with expansion valve, fluid reservoir and with regulating valve for compressor of air conditioning system - N280- (with AC compressor regulated from the outside).
⇒ "9.6 Pressure test for vehicles with expansion valve, fluid reservoir and with regulating valve for compressor of air conditioning system N280 (with AC compressor regulated from the outside)", page 83

9.4 Pressure test for vehicles with throttle and catch pan (with AC compressor regulated from the inside)

Note

- *Connect A/C service station*
⇒ "5 Working with the A/C service station", page 36
- *Observe test requirements*
⇒ "9.1 Test requirements before the pressure test", page 71 .

– Bring the engine speed to 2000 rpm.

– Observe the pressure gauge of the A/C service station.

Note

Switching pressures of the pressure switch for the air conditioning system - F129- on the refrigerant circuit ⇒ Heating, Air Conditioning; Rep. gr. 87 .

Specified values

High-pressure side:

From the output pressure (when connecting the pressure gauge) rising up to maximum 20 bar overpressure.

Low-pressure side:

From the output pressure (when connecting the pressure gauge) dropping to diagram value.

A - High pressure (measured on the service connection) in bar overpressure.

B - Low pressure (measured on the connection with valve on the AC compressor or on the catch pan) in bar overpressure.

C - Permissible tolerance range.

D - Low pressure (measured on the connection with the valve for the low pressure switch or on the service connection) in bar overpressure.

E - Permissible tolerance range.

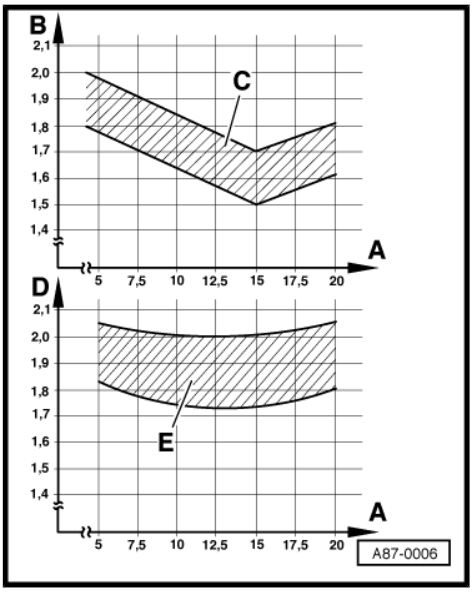

Possible deviation from the specified value	Possible cause of fault	Rectifying fault
• High pressure remains constant or increases only slightly (above the pressure while engine is not running), • Low pressure drops quickly to diagram value or lower, • The required cooling capacity is not reached.	Too little refrigerant in the circuit.	– Search for leaks with the leak detector, eliminate. – Newly filling the refrigerant circuit.
• High pressure is normal, • Low pressure corresponds to the diagram value, • The required cooling capacity is not reached.		
• High pressure is normal, • Low pressure is too low (see diagram), • The required cooling capacity is not reached.		

Note

If no fault is found for this complaint, clean the refrigerant circuit *⇒ "7 Removing contaminants from the refrigerant circuit", page 52* .

Possible deviation from the specified value	Possible cause of fault	Rectifying fault
• High pressure increases only slightly above the pressure while engine is not running, • Low pressure drops only slightly, • The required cooling capacity is not reached.	AC compressor defective.	– Clean the refrigerant circuit. ⇒ “7 Removing contaminants from the refrigerant circuit”, page 52 – Replace AC compressor.

Possible deviation from the specified value	Possible cause of fault	Rectifying fault
• High pressure increases above the specified value, • Low pressure drops quickly to diagram value or lower, • The required cooling capacity is not reached.	Constriction or blockage in the refrigerant circuit.	– Feel the temperature gradient of the refrigerant circuit with the hand. • A temperature gradient is noticed on a component: – In case a hose line or a pipe is bent or constricted, replace this component. – In case of a blockage, clean the refrigerant circuit ⇒ “7 Removing contaminants from the refrigerant circuit”, page 52 . • If no fault is found: – Clean the refrigerant circuit ⇒ “7 Removing contaminants from the refrigerant circuit”, page 52 .
• High pressure and low pressure is normal at first, after a certain period of time: – the high pressure increases above the specified value, – the low pressure drops to diagram value or lower, – the required cooling capacity is no longer reached.	Humidity in the refrigerant circuit.	– Check catch pan (with dessicator) and throttle and replace if necessary, then evacuate the refrigerant circuit for at least 3 hours (see notes). – Clean the refrigerant circuit ⇒ “7 Removing contaminants from the refrigerant circuit”, page 52 .
• High pressure and low pressure is normal at first. • After a longer operating time, the low pressure drops remarkably low (evaporator ices up).		

Note

- *If problems arise due to humidity in the refrigerant circuit only after a longer operating time or only occasionally (the low pressure drops below the specified value and the evaporator ices up), it is adequate to replace the dessicator (the volume of refrigerant oil must be adapted* *⇒ "10.5 Replace catch pan and throttle/fluid reservoir", page 94* *). Subsequently the refrigerant circuit must be evacuated for at least 3 hours.*
- *First of all, it is not required to clean the refrigerant circuit for this complaint (to flush with refrigerant R134a or to blow through with compressed air and nitrogen), as normally only a small amount of humidity is present in the system which can be removed through a longer period of evacuation.*

Possible deviation from the specified value	Possible cause of fault	Rectifying fault
• High pressure is normal or too high, • Low pressure is too high (see diagram), • the AC compressor makes noises (especially after switching it on), • The required cooling capacity is not reached.	Too much refrigerant in the circuit.	– Drain the refrigerant from the refrigerant circuit. • The volume of refrigerant suctioned out corresponds approximately to the specified filling capacity: – Replace AC compressor. • The volume of refrigerant suctioned out is considerably more than the specified filling capacity: – Newly filling the refrigerant circuit. – Repeat check.

Possible deviation from the specified value	Possible cause of fault	Rectifying fault
• High pressure and low pressure is normal, • The required cooling capacity is not reached.	Too much refrigerant oil in the circuit.	– Drain the refrigerant from the refrigerant circuit. – Clean the refrigerant circuit ⇒ "7 Removing contaminants from the refrigerant circuit", page 52 . – Newly filling the refrigerant circuit. – Repeat check.
• High pressure and low pressure is normal, • the AC compressor makes noises (especially after switching it on), • the required cooling capacity is reached.		

Note

- *Over-filling with refrigerant oil can occur if, for example, the AC compressor was replaced without adapting the volume of refrigerant oil.*
- *In case too much refrigerant oil is present in the refrigerant circuit, the AC compressor must be emptied and the catch pan with dessicator must be replaced. After the refrigerant circuit was cleaned* *⇒ "7 Removing contaminants from the refrigerant circuit", page 52* *, fill the correct volume of refrigerant oil into the circuit.*

9.5 Pressure test for vehicles with expansion valve and fluid reservoir (with AC compressor regulated from the inside)

Note

- *Connect A/C service station*
  ⇒ "5 Working with the A/C service station", page 36
- *Observe test requirements*
  ⇒ "9.1 Test requirements before the pressure test", page 71 .

– Bring the engine speed to 2000 rpm.

– Observe the pressure gauge of the A/C service station.

Note

- *Switching pressures of the pressure switch for the air conditioning system - F129- on the refrigerant circuit ⇒ Heating, Air Conditioning; Rep. gr. 87 .*
- *The pressures must be measured on the service connections, the fitting location of these connections is specifically designed for vehicles.*

Specified values

High-pressure side:

From the output pressure (when connecting the pressure gauge) rising up to maximum 20 bar overpressure.

Low-pressure side:

From the output pressure (when connecting the pressure gauge) dropping to diagram value.

A - High pressure in bar overpressure.

B - Low pressure in bar overpressure.

C - Permissible tolerance range.

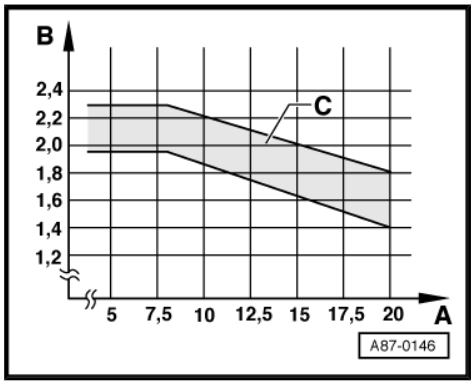

Possible deviation from the specified value	Possible cause of fault	Rectifying fault
• High pressure remains constant or increases only slightly (above the pressure while engine is not running), • Low pressure drops quickly to diagram value or lower, • The required cooling capacity is not reached.	Too little refrigerant in the circuit or expansion valve defective.	– Drain the refrigerant from the refrigerant circuit. • The volume of refrigerant suctioned out corresponds approximately to the specified filling capacity: – Replace expansion valve. – Newly filling the refrigerant circuit. – Repeat check. • The volume of refrigerant suctioned out is considerably less than the specified filling capacity: – Search for leaks with the leak detector, eliminate. – Newly filling the refrigerant circuit. – Repeat check.
• High pressure is normal, • Low pressure corresponds to the diagram value, • The required cooling capacity is not reached.		

Note

If no fault is found for this complaint, clean the refrigerant circuit *⇒ "7 Removing contaminants from the refrigerant circuit", page 52* .

Possible deviation from the specified value	Possible cause of fault	Rectifying fault
• High pressure increases above the specified value, • Low pressure drops quickly to diagram value or lower, • The required cooling capacity is not reached.	♦ Constriction or blockage in the refrigerant circuit. ♦ Expansion valve defective.	– Feel the temperature gradient of the refrigerant circuit with the hand. • A temperature gradient is noticed on a component: – In case a hose line or a pipe is bent or constricted, replace this component. – In case of a blockage, clean refrigerant circuit ⇒ “7 Removing contaminants from the refrigerant circuit”, page 52 , if necessary replace the expansion valve. • If no fault is found: – Clean refrigerant circuit ⇒ “7 Removing contaminants from the refrigerant circuit”, page 52 , if necessary replace the expansion valve. – Repeat check.

Note

If the function is not in order after cleaning the refrigerant circuit, the expansion valve must be replaced.

Possible deviation from the specified value	Possible cause of fault	Rectifying fault
• High pressure and low pressure is normal at first, • after a certain period of time the high pressure rises above the specified value if the low pressure drops to diagram value or lower, • the required cooling capacity is no longer reached.	♦ Expansion valve defective. ♦ Humidity in the refrigerant circuit.	– Replace the fluid reservoir or only the dessicator (specifically designed for vehicles) and evacuate the refrigerant circuit for at least 3 hours (see notes). – Check expansion valve for dirt or corrosion, replace if necessary. – Clean the refrigerant circuit ⇒ “7 Removing contaminants from the refrigerant circuit”, page 52 .
• High pressure and low pressure is normal at first. • After a longer operating time, the low pressure drops remarkably low (evaporator ices up).		

Note

- *If problems arise due to humidity in the refrigerant circuit, only after a longer operating time or only occasionally (the low pressure drops below the specified value and the evaporator ices up), it is adequate to replace the dessicator (the volume of refrigerant oil must be adapted). Subsequently the refrigerant circuit must be evacuated for at least 3 hours.*
- *First of all, it is not required to clean the refrigerant circuit for this complaint (to flush with refrigerant R134a or to blow through with compressed air and nitrogen), as normally only a small amount of humidity is present in the system which can be removed through a longer period of evacuation.*

Possible deviation from the specified value	Possible cause of fault	Rectifying fault
• High pressure is normal or too high, • Low pressure is too high (see diagram), • The required cooling capacity is not reached, • the AC compressor makes noises (especially after switching it on).	♦ Too much refrigerant in the circuit. ♦ Expansion valve or AC compressor defective.	– Drain the refrigerant from the refrigerant circuit. • The volume of refrigerant suctioned out corresponds approximately to the specified filling capacity: – Replace expansion valve. – Newly filling the refrigerant circuit. – Repeat check. • The volume of refrigerant suctioned out is considerably more than the specified filling capacity: – Newly filling the refrigerant circuit. – Repeat check.

Note

If the function of the air conditioning system is not O.K. when repeating the test, re-exchange expansion valve and clean refrigerant circuit
⇒ "7 Removing contaminants from the refrigerant circuit", page 52 *. Subsequently replace AC compressor and fluid reservoir with dessicator or only dessicator (specifically designed for vehicles).*

Possible deviation from the specified value	Possible cause of fault	Rectifying fault
• High pressure increases only slightly above the pressure while engine is not running, • Low pressure drops only slightly, • The required cooling capacity is not reached.	AC compressor defective.	– Clean the refrigerant circuit ⇒ “7 Removing contaminants from the refrigerant circuit”, page 52 . – Replace AC compressor and fluid reservoir with dessicator or only dessicator (specifically designed for vehicles).

Possible deviation from the specified value	Possible cause of fault	Rectifying fault
• High pressure is normal, • Low pressure is too low (see diagram), • the required cooling capacity is reached.	Expansion valve or AC compressor defective.	– Replace expansion valve. – Newly filling the refrigerant circuit. – Repeat check.

Note

- *If the function of the air conditioning system is not O.K. when repeating the test, re-exchange expansion valve and clean refrigerant circuit ⇒ “7 Removing contaminants from the refrigerant circuit”, page 52 . Subsequently replace AC compressor and fluid reservoir with dessicator or only dessicator (specifically designed for vehicles).*
- *If this fault occurs, it can happen that the evaporator ices up although the volume of refrigerant in the circuit is O.K.*

Possible deviation from the specified value	Possible cause of fault	Rectifying fault
• High pressure and low pressure is normal, • The required cooling capacity is not reached.	Too much refrigerant oil in the circuit.	– Drain refrigerant circuit. – Clean the refrigerant circuit ⇒ “7 Removing contaminants from the refrigerant circuit”, page 52 . – Newly filling the refrigerant circuit.
• High pressure and low pressure is normal, • the AC compressor makes noises (especially after switching it on), • the required cooling capacity is reached.		

Note

- *Over-filling with refrigerant oil can occur if, for example, the AC compressor was replaced without adapting the volume of refrigerant oil.*
- *In case too much refrigerant oil is present in the refrigerant circuit, the AC compressor must be emptied and the fluid reservoir with the dessicator or only the dessicator (specifically designed for vehicles) must be replaced. After the refrigerant circuit was cleaned* *⇒ "7 Removing contaminants from the refrigerant circuit", page 52* *, fill the correct volume of refrigerant oil into the circuit.*

9.6 Pressure test for vehicles with expansion valve, fluid reservoir and with regulating valve for compressor of air conditioning system - N280- (with AC compressor regulated from the outside)

Note

- *Connect A/C service station*
  ⇒ "5 Working with the A/C service station", page 36
- *Observe test requirements*
  ⇒ "9.1 Test requirements before the pressure test", page 71 .

– Bring the engine speed to 2000 rpm.

– Observe the pressure gauge of the A/C service station.

Note

The pressures must be measured on the service connections, the fitting location of these connections is specifically designed for vehicles.

⇒ "9.6.1 Specified values", page 83

9.6.1 Specified values

High-pressure side:

From the output pressure (when connecting the pressure gauge) rising up to maximum 20 bar overpressure.

Low-pressure side:

From the output pressure (when connecting the pressure gauge) dropping to diagram value.

A - Low pressure (measured on the service connection) in bar absolute pressure.

B - The control current for the regulating valve for compressor of air conditioning system -N280- in amps.

C - Permissible tolerance range (valid for A/C compressor load between 10... 90 %)

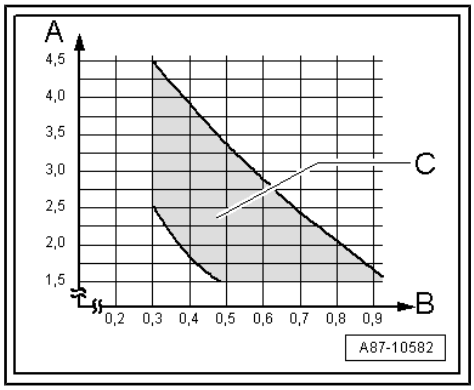

Note

- *The pressure on the high-pressure side can rise to maximum 29 bar under unfavourable conditions (very high ambient temperatures, high humidity) and the performance of the air conditioning system may not always suffice in order to reach the given value.*
- *The control current -B- is indicated ⇒ Vehicle diagnostic tester in the measured value block of the control and display unit for air conditioner Climatronic - E87- or the Climatronic control unit - J255- .*
- *The high pressure measured by the high pressure sender - G65- is displayed in the measured value block ⇒ Vehicle diagnostic tester.*
- *The low pressure settles in the tolerance range in line with the control current for the regulating valve for compressor of air conditioning system - N280- within the performance range of the AC compressor.*
- *The specified working current for the regulating valve must be greater than 0.3 A so that the regulating valve is easily actuated.*
- *On the setting "maximum refrigerating capacity" the control current is regulated to approx. 0.65 A up to 0.8 A (specifically designed for vehicles, displayed in the measured value block).*

Possible deviation from the specified value	Possible cause of fault	Rectifying fault
• High pressure remains constant or increases only slightly (above the pressure while engine is not running), • Low pressure drops quickly to diagram value or lower, • The required cooling capacity is not reached.	♦ The actuation of the regulating valve for compressor of air conditioning system - N280- is incorrect. ♦ Too little refrigerant in the circuit. ♦ Expansion valve defective.	– Check the actuation of the regulating valve for compressor of air conditioning system - N280- . – Drain the refrigerant from the refrigerant circuit. • The volume of refrigerant suctioned out is considerably less than the specified filling capacity: – Search for leaks with the leak detector, eliminate. – Newly filling the refrigerant circuit. – Repeat check.
• High pressure is normal, • Low pressure corresponds to the diagram value, • The required cooling capacity is not reached.		

Possible deviation from the specified value	Possible cause of fault	Rectifying fault
• High pressure is normal, • Low pressure is too low (see diagram), • The required cooling capacity is not reached.		• The volume of refrigerant suctioned out corresponds approximately to the specified filling capacity: – Replace expansion valve. – Newly filling the refrigerant circuit. – Repeat check.

Note

- *If no fault is found for this complaint, clean the refrigerant circuit ⇒ "7 Removing contaminants from the refrigerant circuit", page 52 .*
- *Check the measured values of the evaporator vent temperature sender - G263- and the actuation of the regulating valve for compressor of air conditioning system - N280- . If the measured value of the evaporator vent temperature sender - G263- is incorrect, the evaporator can ice up and the cooling capacity is not reached.*
- *If the function of the air conditioning system is not O.K. when repeating the test after replacing the expansion valve (re-exchange expansion valve), clean refrigerant circuit ⇒ "7 Removing contaminants from the refrigerant circuit", page 52 . Subsequently replace AC compressor and fluid reservoir with dessicator or only dessicator (specifically designed for vehicles).*
- *If the expansion valve is defective (it is closed constantly or it does not open up wide enough) the regulating valve for compressor of air conditioning system - N280- is actuated to maximum performance and the low pressure drops to the diagram value or lower (the AC compressor suctions the refrigerant out of the low pressure side). As no refrigerant can flow through the expansion valve, the cooling capacity is not reached, perhaps the high pressure does not rise or only rises slightly because no energy turnover exists.*
- *If this fault occurs, it can happen that the evaporator ices up although the volume of refrigerant in the circuit is O.K.*

Possible deviation from the specified value	Possible cause of fault	Rectifying fault
• High pressure increases only slightly above the pressure while engine is not running, • Low pressure drops only slightly, • The required cooling capacity is not reached.	♦ The actuation of the regulating valve for compressor of air conditioning system - N280- is incorrect. ♦ AC compressor defective.	– Check the actuation of the regulating valve for compressor of air conditioning system - N280- . – Clean the refrigerant circuit ⇒ "7 Removing contaminants from the refrigerant circuit", page 52 . – Replace AC compressor.

Possible deviation from the specified value	Possible cause of fault	Rectifying fault
• High pressure increases above the specified value, • Low pressure drops quickly to diagram value, • The required cooling capacity is not reached.	♦ The actuation of the regulating valve for compressor of air conditioning system - N280- is incorrect. ♦ Constriction or blockage in the refrigerant circuit. ♦ Expansion valve defective.	– Check the actuation of the regulating valve for compressor of air conditioning system - N280- . – Feel the temperature gradient of the refrigerant circuit with the hand. • A temperature gradient is noticed on a component: – In case a hose line or a pipe is bent or constricted, replace this component. – In case of a blockage, clean refrigerant circuit ⇒ “7 Removing contaminants from the refrigerant circuit”, page 52 , if necessary replace the expansion valve. • If no fault is found: – Clean refrigerant circuit ⇒ “7 Removing contaminants from the refrigerant circuit”, page 52 , if necessary replace expansion valve and fluid reservoir with dessicator or only dessicator (specifically designed for vehicles). – Repeat check.

Note

♦ *If this fault occurs, it can happen that the evaporator ices up although the volume of refrigerant in the circuit is O.K.*

♦ *If the expansion valve is defective (it is closed constantly or it does not open up wide enough) the regulating valve for compressor of air conditioning system - N280- is actuated to maximum performance and the low pressure drops to the diagram value or lower (the AC compressor suctions the refrigerant out of the low pressure side). As no refrigerant can flow through the expansion valve, the cooling capacity is not reached, perhaps the high pressure does not rise or only rises slightly because no energy turnover exists.*

Possible deviation from the specified value	Possible cause of fault	Rectifying fault
• High pressure and low pressure is normal at first, after a certain period of operating time: – the high pressure increases above the specified value, – the low pressure drops to diagram value or lower, – the required cooling capacity is no longer reached.	♦ The actuation of the regulating valve for compressor of air conditioning system - N280- is incorrect. ♦ Humidity in the refrigerant circuit.	– Check the actuation of the regulating valve for compressor of air conditioning system - N280- . – Check expansion valve for dirt or corrosion, replace if necessary. – Replace fluid reservoir with dessicator or only dessicator (specifically designed for vehicles) see notes. – Evacuate the refrigerant circuit for at least 3 hours. – Repeat the test after refilling the circuit.
• High pressure and low pressure is normal at first, after a longer period of operating time: – if the low pressure drops below the specified value (evaporator ices up).		

Note

- *If problems arise due to humidity in the refrigerant circuit only after a longer operating time or only occasionally (the low pressure drops below the specified value and the evaporator ices up), it is adequate to replace the dessicator (the volume of refrigerant oil must be adapted* *⇒ "10.5 Replace catch pan and throttle/fluid reservoir", page 94* *). Subsequently the refrigerant circuit must be evacuated for at least 3 hours.*
- *First of all, it is not required to clean the refrigerant circuit for this complaint (to flush with refrigerant R134a or to blow through with compressed air and nitrogen), as normally only a small amount of humidity is present in the system which can be removed through a longer period of evacuation.*
- *If this fault occurs, it can happen that the evaporator ices up although the volume of refrigerant in the circuit is O.K.*
- *Due to a fault on the evaporator vent temperature sender - G263- the refrigerant circuit can also ice up. For this complaint, also observe the measured value of this sender ⇒ Vehicle diagnostic tester*

Possible deviation from the specified value	Possible cause of fault	Rectifying fault
• High pressure is normal, • Low pressure is too low (see diagram), • the required cooling capacity is reached.	♦ The actuation of the regulating valve for compressor of air conditioning system - N280- is incorrect. ♦ Expansion valve or AC compressor defective.	– Check the actuation of the regulating valve for compressor of air conditioning system - N280- . – Clean the refrigerant circuit. ⇒ “7 Removing contaminants from the refrigerant circuit”, page 52 , if necessary replace expansion valve and fluid reservoir with dessicator or only dessicator (specifically designed for vehicles) see notes. – Repeat the test after refilling the circuit. – If the function is N.O.K., replace A/C compressor.

Note

- *In the event of the error “High pressure normal, low pressure too low” please observe the following: If this fault occurs, it can happen that the evaporator ices up although the volume of refrigerant in the circuit is O.K.*
- *If the fault occurs on the regulating valve for compressor of air conditioning system - N280- (the regulating valve is not actuated and the AC compressor however keeps running) it is not required to clean the refrigerant circuit (flush with refrigerant R134a or blow through with compressed air and nitrogen). If this fault occurs, it is sufficient to replace the AC compressor (adapt the volume of refrigerant oil in the new AC compressor ⇒ “10.4 Replace AC compressor”, page 93).*
- *If the expansion valve is defective (it is closed constantly or it does not open up wide enough) the regulating valve for compressor of air conditioning system - N280- is actuated to maximum performance and the low pressure drops to the diagram value or lower (the AC compressor suctions the refrigerant out of the low pressure side). As no refrigerant can flow through the expansion valve, the cooling capacity is not reached, perhaps the high pressure does not rise or only rises slightly because no energy turnover exists.*
- *Due to a fault on the evaporator vent temperature sender - G263- the refrigerant circuit can also ice up. Also observe the measured value of this sender ⇒ Vehicle diagnostic tester*

Possible deviation from the specified value	Possible cause of fault	Rectifying fault
• High pressure is normal or too high, • Low pressure is too high (see diagram), • the AC compressor makes noises (especially after switching it on), • The required cooling capacity is not reached.	♦ The actuation of the regulating valve for compressor of air conditioning system - N280- is incorrect. ♦ Too much refrigerant in the circuit. ♦ Expansion valve defective.	– Check the actuation of the regulating valve for compressor of air conditioning system - N280- . – Drain the refrigerant from the refrigerant circuit. • The volume of refrigerant suctioned out is considerably more than the specified filling capacity: – Newly fill the refrigerant circuit and repeat the test. • The volume of refrigerant suctioned out corresponds approximately to the specified filling capacity: – Replace expansion valve. – Newly fill the refrigerant circuit and repeat the test. – If the function is N.O.K.:
	♦ Too much refrigerant oil in the circuit. ♦ AC compressor defective.	– Drain the refrigerant from the refrigerant circuit. – Clean the refrigerant circuit. ⇒ “7 Removing contaminants from the refrigerant circuit”, page 52 , replace fluid reservoir with dessicator or only dessicator (specifically designed for vehicles). – Newly fill the refrigerant circuit and repeat the test. – If the function is N.O.K., replace A/C compressor.

Note

The cause of this fault may also be a surplus of refrigerant oil in the circuit. Over-filling with refrigerant oil can occur if, for example, the AC compressor was replaced without adapting the volume of refrigerant oil.

Possible deviation from the specified value	Possible cause of fault	Rectifying fault
• High pressure and low pressure is normal, • The required cooling capacity is not reached.	♦ The actuation of the regulating valve for compressor of air conditioning system - N280- is incorrect. ♦ Too much refrigerant oil in the circuit. ♦ Expansion valve defective.	– Check the actuation of the regulating valve for compressor of air conditioning system - N280- . – Clean the refrigerant circuit. ⇒ “7 Removing contaminants from the refrigerant circuit”, page 52 . – Newly fill the refrigerant circuit and repeat the test. – If the function is N.O.K., replace expansion valve.
• High pressure and low pressure is normal, • the AC compressor makes noises (especially after switching it on), • The required cooling capacity is not reached.		

Note

♦ *Over-filling with refrigerant oil can occur if, for example, the AC compressor was replaced without adapting the volume of refrigerant oil.*

♦ *If the expansion valve is defective (always open), the evaporator temperature is no longer regulated in such a way that only gaseous refrigerant leaves the evaporator. Under certain operating conditions, liquid drops can then be sucked into the AC compressor, this then leads to noises (liquid cannot be compressed).*

10 Replace components of the refrigerant circuit

⇒ “10.1 Replace parts on the refrigerant circuit - General instructions”, page 91

⇒ “10.2 Components of the refrigerant circuit leaking or damaged - the refrigerant circuit is absolutely empty”, page 92

⇒ “10.3 Components of the refrigerant circuit leaking or damaged - refrigerant is still in the refrigerant circuit”, page 93

⇒ “10.4 Replace AC compressor”, page 93

⇒ “10.5 Replace catch pan and throttle/fluid reservoir”, page 94

10.1 Replace parts on the refrigerant circuit - General instructions

- All the components of the refrigerant circuit, which are sent in for quality monitoring, must always be closed (use original screw caps of the original part).
- The original parts (AC compressor, catch pan, evaporator, condensor) were previously filled with nitrogen gas. This filling of nitrogen gas escapes uniformly, more specifically, the pressure of the nitrogen filling is now so low that when opening for the first time, it is no longer noticeable that gas escapes.
- On vehicles with an AC compressor without magnetic coupling, the engine must only be started if the refrigerant circuit is correctly assembled, see ⇒ “1.15.3 Additional work on vehicles with AC compressor without magnetic coupling ”, page 15 .
- So that the AC compressor with the regulating valve for compressor of air conditioning system - N280- suffers no damage when the refrigerant circuit is empty, it is fitted with a secured oil supply. This means that approx. 40 to 50 cm^3 of refrigerant oil remains in the AC compressor.

Two refrigerant circuit systems are installed:

- ♦ Refrigerant circuit with throttle and catch pan with integrated dessicator (Superb I)
- ♦ Refrigerant circuit with expansion valve and fluid reservoir with installed dessicator (all types except Superb I)

The catch pan / fluid reservoir / dessicator must not be replaced under the following conditions:

- ♦ After an accident, but without any visible damage to the catch pan / fluid reservoir, and if the refrigerant circuit was not opened.
- ♦ The repair (replacement of defective components) is performed for a short period and no humidity has penetrated (during the repair the components were immediately closed with screw caps after separating them in order to avoid any humidity from penetrating).

The catch pan / fluid reservoir / dessicator must be replaced under the following conditions:

Note

- *On vehicles with expansion valve the dessicator is arranged as a separate component and thus the reservoir must not be completely replaced yet, only the dessicator, see ⇒ Heating, Air Conditioning; Rep. gr. 87 and ⇒ Electronic Catalogue of Original Parts .*
- *The new generation of fluid reservoirs is directly installed on the condensor and is therefore inseparably connected to it.*

- The refrigerant circuit has been opened as of an undetermined time (creeping leakage).
- The repair extends beyond the normal repair time and humidity has penetrated.
- The refrigerant circuit was blown through with compressed air and nitrogen or was flushed with refrigerant R134a.
- The AC compressor has blocked (inner damage).
- The catch pan / fluid reservoir is damaged (accident).

10.2 Components of the refrigerant circuit leaking or damaged - the refrigerant circuit is absolutely empty

Note

- *If it is only a minor leakage and the refrigerant has creepingly escaped, the loss of the refrigerant oil and the penetration of humidity have nearly no influence on the function of the air conditioning system.*
- *Only carry out the work steps marked with an * for major leaks (e.g. after an accident).*

– Remove the defective component and replace it.

– Remove the A/C compressor. *

– If dirt penetrated into the AC compressor when the refrigerant circuit was opened (e.g. during an accident), the AC compressor must be replaced.*

– Remove the oil drain plug from the AC compressor (replace O-ring ⇒ Electronic Catalogue of Original Parts) and drain oil. In order to speed up the evacuation of the refrigerant oil, turn the AC compressor with the clutch disk of the magnetic coupling by hand (disposal of used oil ⇒ “3 Legal texts and legal regulations”, page 33).*

– Subsequently fill new refrigerant oil into the AC compressor (if it is not replaced). The oil quantity and the oil type correspond to the refrigerant oil volume in the new AC compressor, see ⇒ Heating, Air Conditioning; Rep. gr. 87 .*

– Flush the refrigerant circuit with the refrigerant R134a, if this is not possible, blow through with compressed air and then with nitrogen ⇒ “7 Removing contaminants from the refrigerant circuit”, page 52 .*

– Replace catch pan and throttle/fluid reservoir with dessicator (or only dessicator, specifically designed for vehicles)

⇒ “10.5 Replace catch pan and throttle/fluid reservoir”, page 94 .

– Assemble the refrigerant circuit, evacuate and fill again.

– Check the function of the air conditioning system.

10.3 Components of the refrigerant circuit leaking or damaged - refrigerant is still in the refrigerant circuit

– Empty the refrigerant circuit with the aid of the A/C service station.

– Remove defective component, blow through with compressed air and while doing so collect any refrigerant oil which flows out (disposal of used oil ⇒ “3 Legal texts and legal regulations”, page 33).

– The volume of refrigerant oil blown out must be filled into the new component as fresh refrigerant oil volume, plus:

♦ for the evaporator - 20 cm^3

♦ for the condenser, coolant pipes and refrigerant hoses - 10 cm^3.

– Vehicle with throttle - replace throttle.

– Assemble the refrigerant circuit, evacuate and fill again.

– Check the function of the air conditioning system.

10.4 Replace AC compressor

⇒ “10.4.1 When there is no need to eliminate impurities in the refrigerant circuit e.g. for external damage after an accident”, page 93

⇒ “10.4.2 An inner damage (e.g. noise or no performance)”, page 94

10.4.1 When there is no need to eliminate impurities in the refrigerant circuit e.g. for external damage after an accident

– Empty the refrigerant circuit with the aid of the A/C service station.

– Remove the air conditioning compressor.

– Unscrew the oil drain plug from the removed AC compressor (replace O-ring ⇒ Electronic Catalogue of Original Parts) and drain oil. In order to speed up the evacuation of the refrigerant oil, turn the AC compressor with the clutch disk of the magnetic coupling. Collect oil in a measuring vessel (disposal of used oil ⇒ “3 Legal texts and legal regulations”, page 33).

– Drain oil out of the new A/C compressor using the same method (attention - do not mix with the oil out of the removed A/C compressor) and fill in again an amount of refrigerant oil which corresponds to the oil quantity drained (the refrigerant oil drained from the original part A/C compressor maybe used).

Example:

If 70 cm^3 of refrigerant oil was drained out of the defective AC compressor and 140 cm^3 of refrigerant oil was drained out of the original part AC compressor (a small amount of refrigerant oil remains in the AC compressor). In this case, fill in 70 cm^3 of refrigerant oil into the installed AC compressor.

– Vehicle with throttle - replace throttle.

– Assemble the refrigerant circuit, evacuate and fill again.

– Check the function of the air conditioning system.

10.4.2 An inner damage (e.g. noise or no performance)

– Empty the refrigerant circuit with the aid of the A/C service station.

– Remove the air conditioning compressor.

– Flush the refrigerant circuit with the refrigerant R134a, if this is not possible, blow through with compressed air and then with nitrogen ⇒ page 52 .

– Replace catch pan and throttle/fluid reservoir with dessicator or only dessicator (specifically designed for vehicles).

– Assemble the refrigerant circuit, evacuate and fill again.

– Check the function of the air conditioning system.

10.5 Replace catch pan and throttle/fluid reservoir

⇒ “10.5.1 Because of humidity which has penetrated (the refrigerant circuit was opened over a longer period of time) (e.g. after an accident) or inner damage on the A/C compressor”, page 94

⇒ “10.5.2 Because of outer damage (e.g. caused by an accident), no refrigerant has flown out and no humidity and no dirt has penetrated into the circuit”, page 95

10.5.1 Because of humidity which has penetrated (the refrigerant circuit was opened over a longer period of time) (e.g. after an accident) or inner damage on the A/C compressor

– Empty the refrigerant circuit with the aid of the A/C service station.

– Remove the air conditioning compressor.

– Eliminate fault cause.

– Flush the refrigerant circuit with the refrigerant R134a, if this is not possible, blow through with compressed air and then with nitrogen
⇒ “7 Removing contaminants from the refrigerant circuit”, page 52 .

– Check expansion valve for dirt or corrosion, replace if necessary.

– Replace catch pan and throttle/fluid reservoir with dessicator or only dessicator (specifically designed for vehicles).

– If the AC compressor is not replaced:

♦ Unscrew the oil drain plug from the removed AC compressor (replace O-ring ⇒ Electronic Catalogue of Original Parts) and drain oil. In order to speed up the evacuation of the refrigerant oil, turn the AC compressor with the clutch disk of the magnetic coupling by hand (disposal of used oil
⇒ “3 Legal texts and legal regulations”, page 33).

- ♦ Fill the volume of new refrigerant oil, which corresponds to the refrigerant oil volume in the original part AC compressor, into the removed AC compressor ⇒ Heating, Air Conditioning; Rep. gr. 87 .
- – If the AC compressor is replaced:
- ♦ A new original part A/C compressor is filled with a refrigerant oil volume required for the complete refrigerant circuit.
- – Assemble the refrigerant circuit, evacuate and fill again.
- – Check the function of the air conditioning system.

10.5.2 Because of outer damage (e.g. caused by an accident), no refrigerant has flown out and no humidity and no dirt has penetrated into the circuit

- – Empty the refrigerant circuit with the aid of the A/C service station.
- – Vehicle with throttle - replace throttle.
- – Remove fluid reservoir/catch pan and remove any heavy dirt.
- – Weigh the removed and cleaned fluid reservoir/catch pan.
- – Fill as much refrigerant oil into the new fluid reservoir/catch pan until it has reached the weight of the removed reservoir.
- – Assemble the refrigerant circuit, evacuate and fill again.
- – Check the function of the air conditioning system.

11 Tools and materials, which are available from the importer

⇒ “11.1 Setting up tools and materials which are available from the importer”, page 96

⇒ “11.2 A/C service station”, page 97

⇒ “11.3 Flushing device for the refrigerant circuits 6337/1 or follow-up models (manufacturer Behr)”, page 98

⇒ “11.4 Flushing device for the refrigerant circuits 6336/1 or follow-up models (manufacturer Waeco)”, page 98

⇒ “11.5 Leak detector V.A.G 1796 ”, page 98

⇒ “11.6 Leak detection system VAS 6196 ”, page 98

⇒ “11.7 Leak detection system VAS 6201A ”, page 99

⇒ “11.8 Adapter case of motor car set VAS 6338/1 ”, page 99

⇒ “11.9 Case of release tools VAS 6127/3 ”, page 99

⇒ “11.10 Socket insert T10364 ”, page 99

⇒ “12.1 Setting up tools and materials which are available from a dealer”, page 100

⇒ “12.7 Tools, which you make yourself”, page 102

11.1 Setting up tools and materials which are available from the importer

This record serves as an overview of the test installations, A/C service stations, tools and materials necessary for the professional repair of the refrigerant circuit.

> ⚠ **Caution**
>
> *Non-approved tools or materials (e.g. stop leak additive) can cause damage/deterioration to the components of the refrigerant circuit or to the used service installations.*
>
> *Only tools and materials approved by the manufacturer may be used.*
>
> *There is no guarantee if non-approved tools or materials were used.*

Overview	Page
A/C service station, e.g. A/C service station with flushing device - VAS 6380A- or currently available service positions, see ⇒ Catalogue of factory equipment	⇒ “11.2 A/C service station”, page 97
Flushing device for the refrigerant circuits - 6337/1- (currently available flushing devices ⇒ Catalogue of factory equipment) ◆ Use on older A/C service stations for flushing the refrigerant circuit with refrigerant R134a. ◆ The reservoir volume in the A/C service station is at least 10 kg of refrigerant R134a.	⇒ “11.3 Flushing device for the refrigerant circuits 6337/1 or follow-up models (manufacturer Behr)”, page 98
Flushing device for the refrigerant circuits - 6336/1- (currently available flushing devices ⇒ Catalogue of factory equipment) ◆ Use on older A/C service stations for flushing the refrigerant circuit with refrigerant R134a. ◆ The reservoir volume in the A/C service station is at least 10 kg of refrigerant R134a.	⇒ “11.4 Flushing device for the refrigerant circuits 6336/1 or follow-up models (manufacturer Waeco)”, page 98

Overview	Page
Leak detector - V.A.G 1796-	⇒ “11.5 Leak detector V.A.G 1796 ”, page 98
Leak detection system - VAS 6196-	⇒ “11.6 Leak detection system VAS 6196 ”, page 98
Leak detection system - VAS 6201A-	⇒ “11.7 Leak detection system VAS 6201A ”, page 99
Leak detection additive, e. g. -VAS 6196/1-	not shown
Adapter case of motor car set - VAS 6338/1- ♦ for connecting the A/C service station to the refrigerant circuit and bridging certain components when flushing with refrigerant R134a or blowing through with compressed air and nitrogen	⇒ “11.8 Adapter case of motor car set VAS 6338/1 ”, page 99
Ultrasonic air conditioning system cleaning device - VAS 6189B- ♦ for eliminating unpleasant odours, caused by the air conditioning system (⇒ Catalogue of factory equipment)	not shown
Case of release tools - VAS 6127/3- ♦ for separating the quick couplings from the refrigerant lines	⇒ “11.9 Case of release tools VAS 6127/3 ”, page 99
Combination fine-filter unit for the compressed-air system, oil, dirt and water separator as is common for painting systems, see ⇒ Catalogue of factory equipment	not shown
O-rings ⇒ Electronic Catalogue of Original Parts	not shown
Refrigerant oil ⇒ Electronic Catalogue of Original Parts	not shown
Socket insert - T10364- ♦ for removing and installing the extractor and filler valves of the air-conditioning system	⇒ “11.10 Socket insert T10364 ”, page 99

11.2 A/C service station

Except the stated A/C service station with flushing device - VAS 6380A- , other service stations and flushing devices can also be used, which are approved by the company Škoda, see the current ⇒ Catalogue of factory equipment .

- ♦ Work procedure: testing, draining off (utilizing), delivering (evacuating) and filling must be carried out according to the enclosed operating instructions of the A/C service station.
- ♦ The installed filters and dessicators must be replaced at the latest after reaching the operating time specified in the related operating instructions and each time after emptying the A/C station (a new replacement filter must be available). Obtainable from the device manufacturer, see ⇒ Operating instructions .

11.3 Flushing device for the refrigerant circuits - 6337/1- or follow-up models (manufacturer Behr)

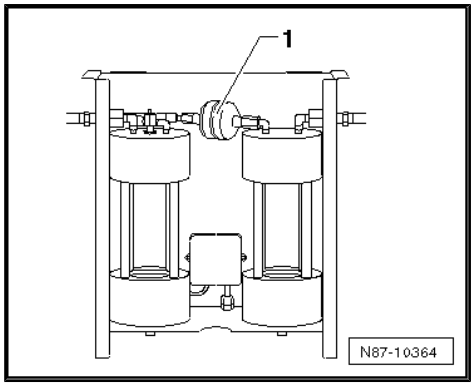

Note

- *With filter -1- and two cylindrical inspection glasses.*
- *Depending on the type and intensity of the contamination of the flushed refrigerant circuits, the filter in the flushing device for refrigerant circuits must be replaced no later than after 2 flushing cycles. If a very dirty refrigerant circuit is flushed out (the refrigerant oil from the refrigerant circuit is black and viscous or there is a lot of swarf in the refrigerant circuit), the filter is replaced after flushing the refrigerant circuit.*

11.4 Flushing device for the refrigerant circuits - 6336/1- or follow-up models (manufacturer Waeco)

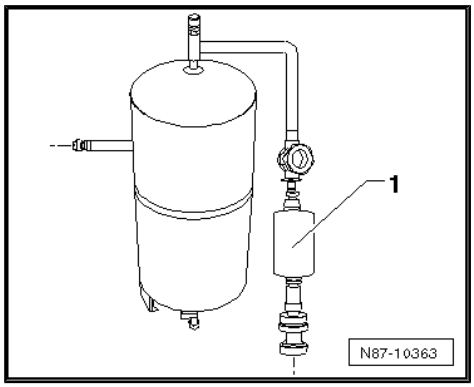

Note

- *With filter -1- and one inspection glass.*
- *Depending on the type and intensity of the contamination of the flushed refrigerant circuits, the filter in the flushing device for refrigerant circuits must be replaced no later than after 2 flushing cycles. If a very dirty refrigerant circuit is flushed out (the refrigerant oil from the refrigerant circuit is black and viscous or there is a lot of swarf in the refrigerant circuit), the filter is replaced after flushing the refrigerant circuit.*

11.5 Leak detector - V.A.G 1796-

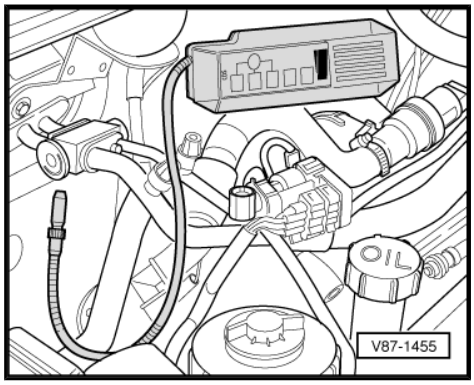

Note

The work sequence for the leak detection must be carried out according to the relevant operating instructions enclosed with the device.

11.6 Leak detection system - VAS 6196-

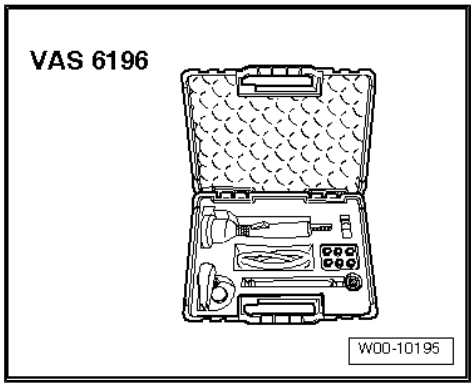

Note

The work sequence for the leak detection must be carried out according to the relevant operating instructions enclosed with the device.

11.7 Leak detection system - VAS 6201A-

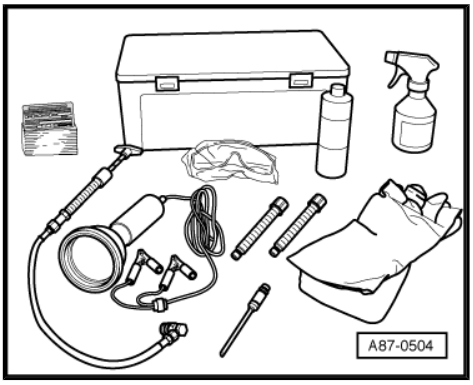

Note

The work sequence for the leak detection must be carried out according to the relevant operating instructions enclosed with the device.

11.8 Adapter case of motor car set - VAS 6338/1-

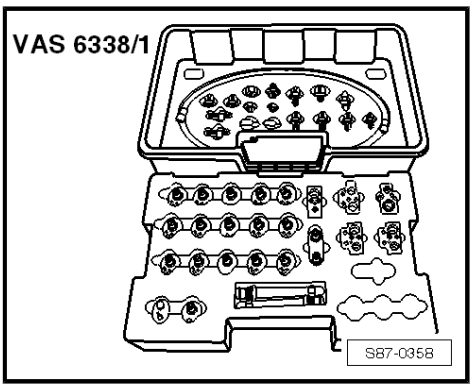

Note

Adapter for setting up the rinsing cycles (specifically designed for vehicles), see
⇒ "7.4 Adapter for setting up the rinsing cycles", page 61 .

11.9 Case of release tools - VAS 6127/3-

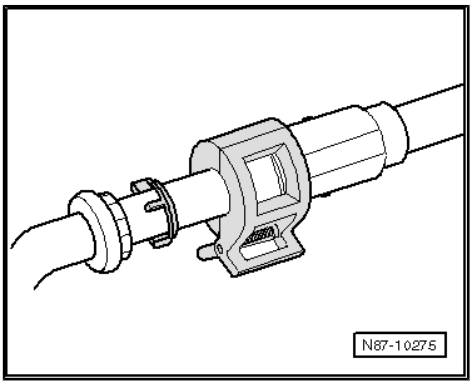

- green NW 8 for the high pressure line
- black NW 13 for the low pressure line

11.10 Socket insert - T10364-

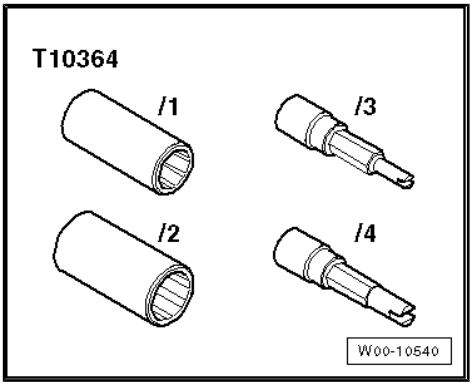

Note

Description of use
⇒ "2.2 Extractor, filler and measurement valves for quick couplings of the AC service station on the refrigerant circuit", page 22 .

12 Tools and materials, which are commercially available

⇒ “12.1 Setting up tools and materials which are available from a dealer”, page 100

⇒ “12.2 Filling hoses”, page 101

⇒ “12.3 Bottle connecting piece for pressure bottle”, page 101

⇒ “12.4 Valve caps with replacement gaskets ”, page 101

⇒ “12.5 Pressure gauge with pressure reducer for nitrogen”, page 102

⇒ “12.6 Quick-coupling adapter for service connections”, page 102

⇒ “12.7 Tools, which you make yourself”, page 102

12.1 Setting up tools and materials which are available from a dealer

Caution

Non-approved tools or materials (e.g. stop leak additive) can cause damage/deterioration to the components of the refrigerant circuit or to the used service installations.

Only tools and materials approved by the manufacturer may be used.

There is no guarantee if non-approved tools or materials were used.

Overview	Page
Filling hoses 5/8" - 18 UNF with valve opener	⇒ “12.2 Filling hoses”, page 101
Bottle connecting piece for pressure bottle for refrigerant and gasket ring with quick coupling connection or thread connection 5/8" - 18 UNF	⇒ “12.3 Bottle connecting piece for pressure bottle”, page 101
Valve caps 5/8" - 18 UNF	⇒ “12.4 Valve caps with replacement gaskets ”, page 101
Pressure gauge with pressure reducer for nitrogen	⇒ “12.5 Pressure gauge with pressure reducer for nitrogen”, page 102
2 pieces of quick-coupling adapters for service connections are included in the scope of delivery of the A/C service station	⇒ “12.6 Quick-coupling adapter for service connections”, page 102
Open ring spanner; the spanner sizes correspond to the bolted connections at the coolant pipes	not shown
Valve opener for filling hoses	not shown
Connecting nipple for conical surface seal 5/8" - 18 UNF	not shown
Compressed air pistol with rubber mouthpiece	not shown
Manual stop valve 5/8" - 18 UNF	not shown
Recycling bottle for refrigerant R134a	not shown

Overview	Page
Digital thermometer	not shown
Protective gloves	not shown
Protective goggles	not shown
Refrigerant R134a with pressure bottle (content as needed)	not shown
Nitrogen with pressure bottle	not shown
Strap wrench (oil filter) as counterholder for V-ribbed belt pulley	not shown

12.2 Filling hoses

Threads 5/8" - 18 UNF

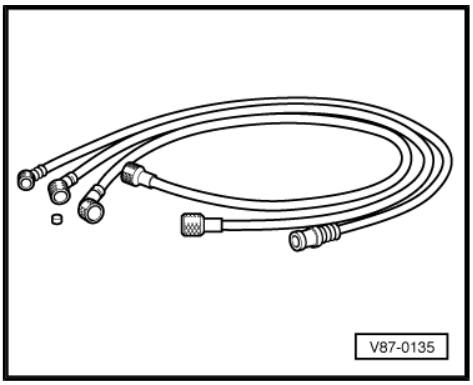

Note

Filling hoses of different colours can be used, 1800 mm long.

12.3 Bottle connecting piece for pressure bottle

For refrigerant with gasket ring, quick coupling connection or thread connection 5/8" -18 UNF.

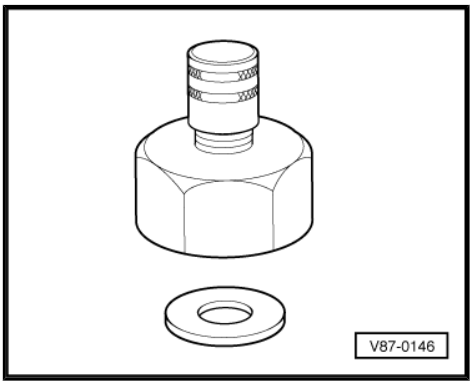

12.4 Valve caps with replacement gaskets

For threads 5/8" - 18 UNF.

Gaskets can also be used for filling hoses.

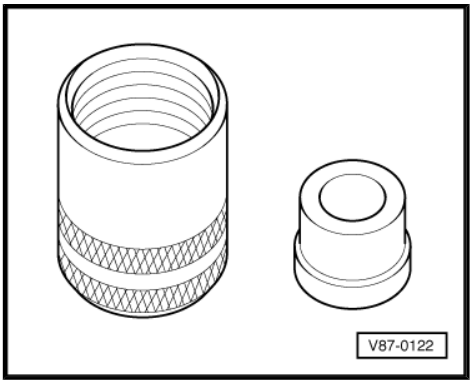

12.5 Pressure gauge with pressure reducer for nitrogen

Maximum reduced pressure: 15 bar.

1 - Pressure gauge with pressure reducer

2 - Pressure hose (inner diameter 5 mm, length 2 m) with hose fittings

3 - Nitrogen cylinder

4 - Hose fitting

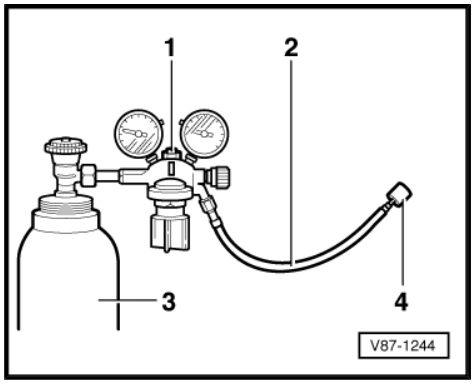

12.6 Quick-coupling adapter for service connections

- High-pressure side with nominal size 16 mm
- Low-pressure side with nominal size 13 mm

Note

These quick couplings are included in the scope of delivery of the A/C service station.

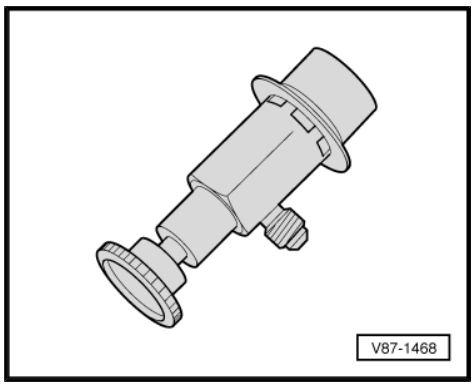

12.7 Tools, which you make yourself

Filling hose with connection for workshop compressed air system

A - Filling hose 5/8" - 18 UNF** (version with large inner diameter)

B - Connection for workshop compressed air system** (only operated with filter and dessicator for compressed air).
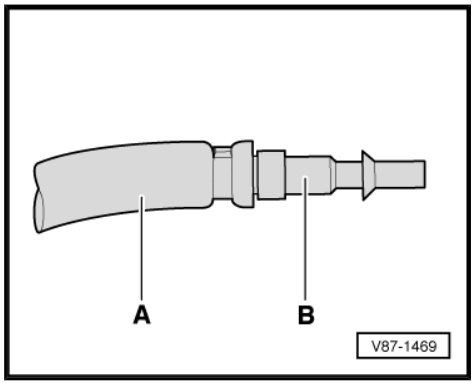
** Tools and materials, which are commercially available.