WWW.ALLTRANS.BY

AUDI, JETTA, PASSAT, 09G/09M

INDEX

GENERAL DESCRIPTION AND VEHICLE APPLICATION CHART 3
COMPONENT APPLICATION CHART 4
IDENTIFICATION TAG LOCATION AND INFORMATION 5
SPEED SENSOR INFORMATION 6
PRESSURE SWITCH AND FLUID TEMPERATURE SENSOR INFORMATION 8
SOLENOID LOCATIONS AND IDENTIFICATION 9
INDIVIDUAL SOLENOID FUNCTION AND FAILURE RESULT 10
SOLENOID OPERATION 11
SOLENOID APPLICATION CHART 13
PASS-THRU CASE CONNECTORS AND WIRE HARNESS' 14
CASE CONNECTOR TERMINAL IDENTIFICATION 16
CASE CONNECTOR INTERNAL COMPONENT RESISTANCE CHARTS 18
TCM CONNECTOR INTERNAL COMPONENT RESISTANCE CHARTS 19
TRANSAXLE RANGE SWITCH OPERATION AND DIAGNOSIS 20
STANDARD AND TIPTRONIC SHIFT QUADRANTS 22
TYPICAL WIRE SCHEMATIC 24
DIAGNOSTIC TROUBLE CODE DESCRIPTION 25
TORQUE CONVERTER CLUTCH OPERATION 27
PRESSURE TAP LOCATIONS AND IDENTIFICATION 28
PRESSURE SPECIFICATIONS 30
TRANSAXLE OIL COOLER INFORMATION 31
OIL PASSAGE IDENTIFICATION 32
CHECK FLUID LEVEL AND FLUID REQUIREMENTS 37
OIL PAN "STAND-PIPE" DIFFERENCES 38
OIL PAN AND OIL PAN GASKET DIFFERENCES 39
OIL FILTER DIFFERENCES 40
TRANSAXLE DISASSEMBLY 42
COMPONENT REBUILD
- *CONVERTER COVER ASSEMBLY* 62
- *TRANSAXLE CASE ASSEMBLY* 63
- *OIL PUMP ASSEMBLY* 65
- *K3 CLUTCH HOUSING ASSEMBLY* 69
- *K1 CLUTCH HOUSING ASSEMBLY* 72
- *K2 CLUTCH HOUSING ASSEMBLY* 76
- *REAR PLANETARY ASSEMBLY* 80
- *FRONT PLANETARY ASSEMBLY* 84
- *CENTER SUPPORT ASSEMBLY* 87
- *TRANSFER DRIVEN GEAR AND FINAL DRIVE ASSEMBLY* 88
- *VALVE BODY ASSEMBLY* 89

TRANSAXLE FINAL ASSEMBLY 100
B2 CLUTCH CLEARANCE MEASUREMENT 102
F1 ROLLER CLUTCH FREEWHEEL DIRECTION 102
B1 CLUTCH CLEARANCE MEASUREMENT 109
TRANSAXLE END-PLAY MEASUREMENT 110
CONVERTER INSTALLED MEASUREMENT 121
THRUST WASHER AND BEARING IDENTIFICATION 122
TORQUE SPECIFICATIONS 124
"UPDATED" TRANSAXLE CODE INFORMATION 124

AUTOMATIC TRANSMISSION SERVICE GROUP
18635 S.W. 107 AVENUE
CUTLER BAY, FLORIDA 33157
(305) 670-4161

Copyright © ATSG 2010

WWW.ALL-TRANS.BY

INTRODUCTION
AUDI, JETTA, PASSAT, 09G/09M Transaxle

1st Printing
March, 2010

The Japanese company AISIN Co., LTD is the manufacturer and developer of the Front Wheel Drive TF60SN transaxle, which is a 6 speed, fully automatic and electronic controlled transaxle. Volkswagen engineers were also involved, in conjunction with Aisin, in the development process for their vehicles and they gave it the 09G/09M designation. BMW gave it the designation 6F21WA for their Mini-Cooper.

The 09G/09M transaxle is used in a wide variety of applications and engine sizes. As a result, the number of friction plates, planetary ratios, intermediate ratios and final drive ratios will vary depending on torque load requirements of the specific vehicle. The TF60SN transaxle uses a gear ratio sensitive system, requiring the correct transaxle interchange. The TF60-SN is used in the BMW Mini Cooper, Volkswagen and Audi vehicles. This transaxle is referred to as the TF60-SN, 09G, 09M, 6F21WA and in some overseas vehicles as 09K. As a result there are a variety of different case and part configurations. Some of these units have the heat exchanger attached to the transmission while others use a remote heat exchanger. This alters the case, case cover and the valve body and if incorrect parts are used, severe planetary failure will occur. This manual covers these differences so that this mistake will not happen to you.

The 09G/09M transaxle uses a Lepelletier arrangement, using a simple planetary coupled with a Ravigneaux planetary. This arrangement makes six forward speeds and reverse possible, with only five clutch packs and one freewheel.

This manual contains the procedures necessary to diagnose, rebuild and/or repair the 09G/09M transaxle and is intended for automotive technicians that are familiar with the operation of automatic transmissions.

We wish to thank Volkswagen® for the information that has made this booklet possible.

No part of any ATSG publication may be reproduced, stored in any retrieval system or transmitted in any form or by any means, including but not limited to electronic, mechanical, photocopying, recording or otherwise, without ***written*** permission of Automatic Transmission Service Group. This includes all text illustrations, tables and charts.

The information and part numbers contained in this booklet have been carefully compiled from industry sources known for their reliability, but ATSG does not guarantee its accuracy.

Copyright © ATSG 2010

WAYNE COLONNA
PRESIDENT

GREG CATANZARO
TECHNICAL CONSULTANT

PETER LUBAN
TECHNICAL CONSULTANT

JON GLATSTEIN
TECHNICAL CONSULTANT

GERALD CAMPBELL
TECHNICAL CONSULTANT

DALE ENGLAND
FIELD SERVICE CONSULTANT

JIM DIAL
TECHNICAL CONSULTANT

ED KRUSE
TECHNICAL CONSULTANT

GREGORY LIPNICK
TECHNICAL CONSULTANT

DAVID CHALKER
TECHNICAL CONSULTANT

AUTOMATIC TRANSMISSION SERVICE GROUP
18635 S.W. 107 AVENUE
CUTLER BAY, FLORIDA 33157
(305) 670-4161

WWW.ALL-TRANS.BY

GENERAL DESCRIPTION

The Japanese company AISIN Co., LTD is the manufacturer and developer of the Front Wheel Drive TF-60SN transaxle, which is a 6 speed, fully automatic and electronic controlled transaxle. Volkswagen engineers were also involved, in conjunction with Aisin, in the development process for their vehicles and they gave it the 09G/09M designation. BMW's designation for the same unit is 6F21WA. US and Overseas Vehicle applications, known at time of printing, are shown in Figure 1.

The 09G/09M transaxle is used in a wide variety of applications and engine sizes. As a result, the number of friction plates, planetary ratios, three or four pinion carriers, transfer gear ratios and the final drive ratios will vary depending on torque load requirements of the specific vehicle. The 09G/09M transaxle uses a gear ratio sensitive system, ***requiring*** the correct transaxle interchange, if that becomes necessary.

There are also versions of this transaxle that have an "Integral Cooler" bolted directly to the transaxle converter cover and pipe engine coolant to the transaxle. Some versions have a "Remote" mounted cooler and pipe transaxle fluid to the cooler. This affects changes to the case, converter cover, valve body and spacer plate. None of these parts are interchangeable with one another.

This transaxle is very similar to the AF40-6 transmission but with 3 very significant differences. One is the B1 brake band has been eliminated and replaced with a B1 clutch pack. Second is the rear cover that gave access to the C/K2 clutch has been eliminated. Third the Transmission Control Module (TCM) is mounted external from the transaxle which makes typical electrical diagnosis available to the technician.

The TCM controls both shift timing and shift feel with the use of eight solenoids. The TCM monitors gear ratio through the input and output shaft hall effect speed sensors. It also can determine the rate of change and adapt the shifts as the friction elements wear.

All TF-60SN (09G) transaxles use a Lepelletier arrangement, which consists of a simple planetary with the sun gear splined to the pump stator and coupled with a Ravigneaux planetary. This allows the sun gears and the planetary pinions of the Ravigneaux planetary gear-set to be driven at different speeds. This arrangement makes six forward speeds and reverse possible, with only five clutch packs and one freewheel.

Refer to Figure 2 for the component locations and the clutch application chart for each gear.

VEHICLE APPLICATION CHART

VEHICLE	YEAR	ENGINE	VW	AISIN
AUDI A3	*2006-Up*	*2.0L*	*09G*	*TF60SN*
AUDI A4	*2006-Up*	*2.0L*	*09G*	*TF60SN*
AUDI TT	*2003-06*	*1.8L*	*09G*	*TF60SN*
AUDI TT	*2004-08*	*2.0L, 3.2L(V6)*	*09G*	*TF60SN*
BMW Mini Clubman	*2008-Up*	*1.6L*	*6F21WA*	*TF60SN*
BMW Mini Cooper	*2002-Up*	*1.6L*	*6F21WA*	*TF60SN*
SEAT Altea (Non US)	*2004-Up*	*1.4L, 1.6L, 2.0L,*	*09G*	*TF60SN*
SEAT Leon (Non US)	*2005-Up*	*1.4L, 1.6L, 2.0L,*	*09G*	*TF60SN*
SEAT Toledo (Non US)	*2004-Up*	*1.6L, 1.9L, 2.0L,*	*09G*	*TF60SN*
Volkswagen Beetle	*2004-Up*	*1.8L, 1.9L, 2.0L, 2.5L*	*09G*	*TF60SN*
Volkswagen Transporter	*2006-Up*	*1.9L, 2.0L, 2.5L*	*09K*	*TF60SN*
Volkswagen Jetta	*2005-Up*	*1.9L, 2.0L, 2.5L*	*09G*	*TF60SN*
Volkswagen Passat/Passat Wagon	*2006-Up*	*2.0L,*	*09G*	*TF60SN*
Volkswagen Passat/Passat Wagon	*2006-Up*	*3.6L,*	*09M*	*TF60SN*
Volkswagen Tiguan (Non US)	*2008-Up*	*1.4L, 2.0L*	*09M*	*TF60SN*
Volkswagen Touran (Non US)	*2003-Up*	*1.6L, 1.9L, 2.0L*	*09G*	*TF60SN*

Copyright © 2010 ATSG

Figure 1

WWW.ALL-TRANS.BY

COMPONENT APPLICATION CHART

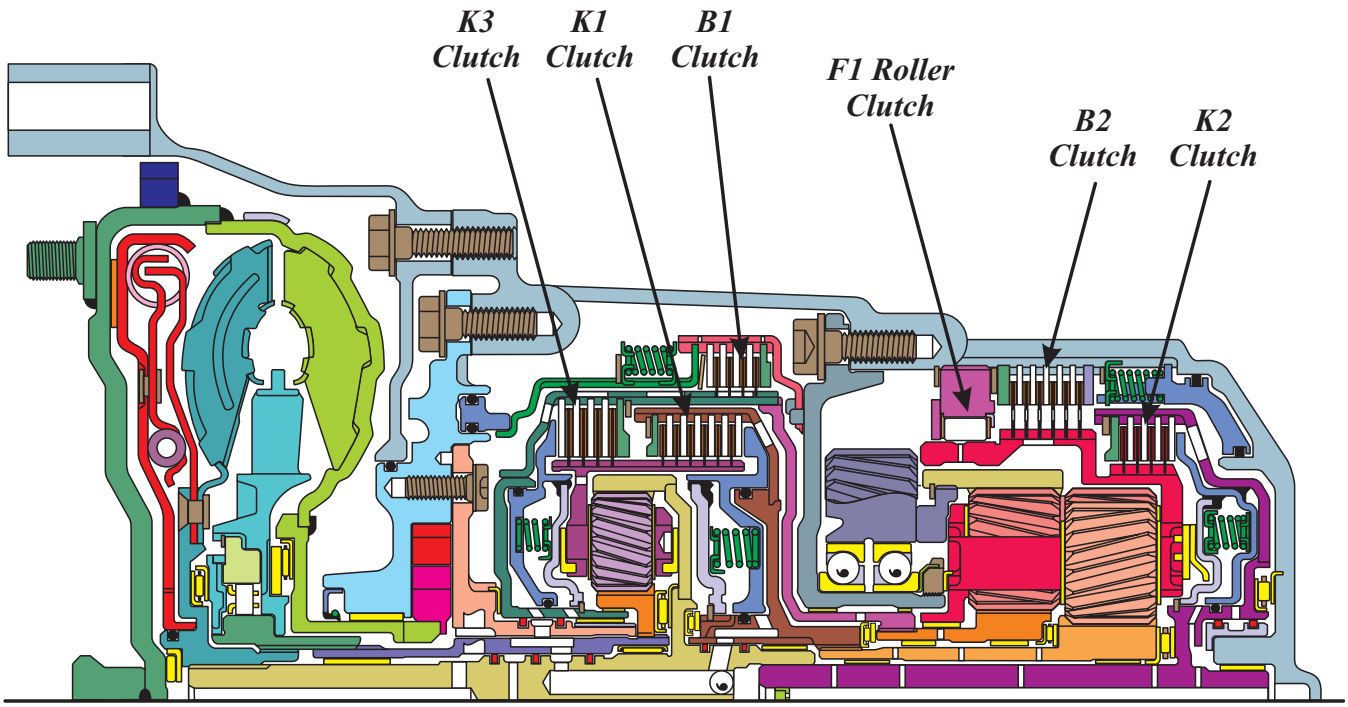

CLUTCH APPLICATION CHART

Gear	K-1 Clutch	K-2 Clutch	K-3 Clutch	B-1 Clutch	B-2 Clutch	F-1 Roller Clutch	Torque Conv. Clutch	Engine 1.6L, 2.0L Ratio***	Engine 1.8L, Ratio****
1st Gear	On				On*	Hold		4.148	4.044
2nd Gear	On			On			On**	2.370	2.371
3rd Gear	On		On				On**	1.556	1.556
4th Gear	On	On					On**	1.155	1.159
5th Gear		On	On				On**	0.859	0.852
6th Gear		On		On			On**	0.686	0.676
Rev Gear			On		On			3.394	3.193

* The B-2 Clutch is applied in "Tiptronic Mode" 1st gear, only for engine braking.
** During normal driving operation, the Torque Converter Clutch can be applied in each gear.
*** Transaxle Codes (GSY 1.6L) and (GJZ 2.0L).
**** Transaxle Code (FXA 1.8L).

Transfer Gear Ratio, Codes GSY, GJZ, FXA, (Driven=52T/Drive=49T) Ratio = 1.061

Final Drive Gear Ratio, Codes GSY, FXA, (15T/61T) Ratio = 4.067

Final Drive Gear Ratio, Codes GJZ, (15T/58T) Ratio = 3.867

Copyright © 2010 ATSG

Figure 2

WWW.ALL-TRANS.BY

TRANSAXLE IDENTIFICATION

The paper ID tag stuck to the side of the case, as shown in Figure 3, carries the OEM part number along with the build date and serial number. The only place we have found a "Transaxle Code" is ink stamped or etched on the transaxle case, in the location shown in Figure 3. In the example shown the transaxle code is "GGZ".

Note: For the newest transaxle code information that is available to us, See Page 124.

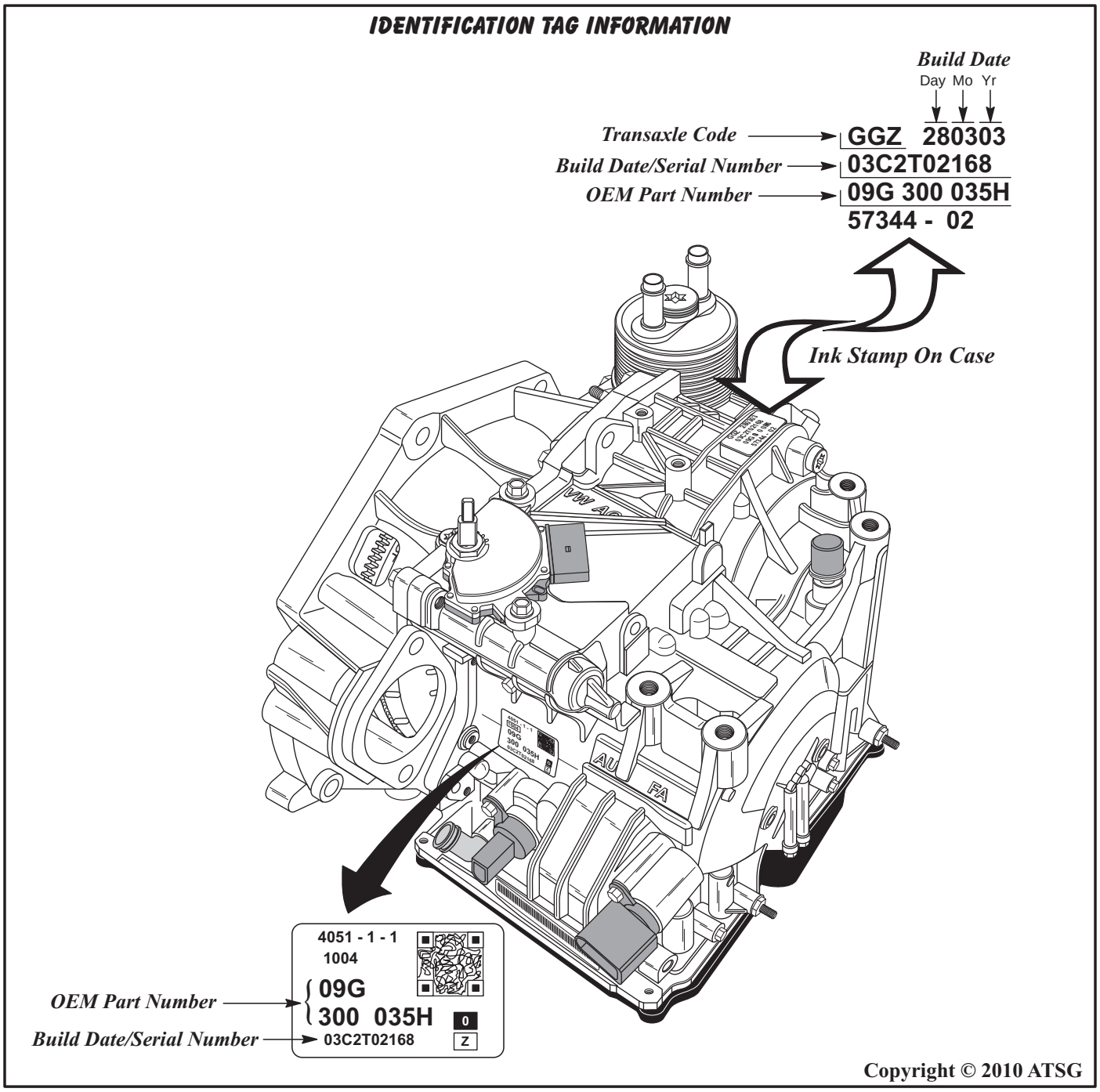

Figure 3

WWW.ALL-TRANS.BY

ELECTRONIC COMPONENTS

Input Speed Sensor (G182)

The Input Speed Sensor (G182) is located in the transaxle case below the valve body, as shown in Figure 6, and retained with a bolt. The ISS has a White connector that mounts on a bracket with a valve body bolt and goes through the 8-way case connector, also shown in Figure 6.

The ISS is triggered by the external lugs on the K-2 clutch housing to determine exact transaxle turbine speed. The TCM uses this information to control line pressure for garage shifts, control and monitor torque converter lock-up clutch, monitor gear ratios and diagnosis of shift components via the Dynamic Shift Program (DSP), which is VW,s name for the shift adapt feature in the TCM.

The ISS is based on the Hall Affect principle. The signal is a square-wave signal whose frequency is proportional to turbine shaft speed. Should the Input Speed Sensor fail, the engine RPM sensor is used as a back-up, no shift adapt operations, no controlled TCC lock-up (apply and release only) and no pressure control on garage shifts (N-D, N-R) harsh engagement.

The Input Speed Sensor is shown in Figure 4.

Output Speed Sensor (G195)

The Output Speed Sensor (G195) is located in the transaxle case below the valve body, as shown in Figure 6, and retained with a bolt. The OSS has a Blue connector that mounts on a bracket with a valve body bolt and goes through the 8-way case connector, also shown in Figure 6.

The OSS is triggered by the external lugs on the Parking Gear to determine exact transaxle output shaft speed. The TCM uses this information to determine shift points, control and monitor torque converter lock-up clutch, monitor gear ratios and diagnosis of shift components via the Dynamic Shift Program (DSP), which is VW,s name for the shift adapt feature in the TCM.

The OSS is based on the Hall Affect principle. The signal is a square-wave signal whose frequency is proportional to output shaft speed. Should the Output Speed Sensor fail, the speed signal from the ABS Control Module is used as back-up, with limited shift adapt capability.

The Output Speed Sensor is shown in Figure 5.

Special Note:

The ISS and OSS are Hall Affect Sensors and should be checked using a scope under operating conditions. The resistance values provided in the Figures below are from new sensors. Resistance checks on these type of sensors would, at best, inform you of either open or grounded circuits within the sensor itself.

INPUT SPEED SENSOR

5.0M Ohms Resistance at room temperature

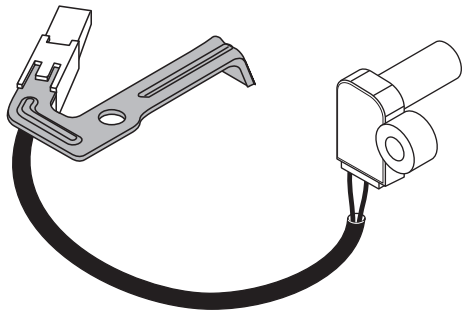

Copyright © 2010 ATSG

Figure 4

OUTPUT SPEED SENSOR

5.0M Ohms Resistance at room temperature

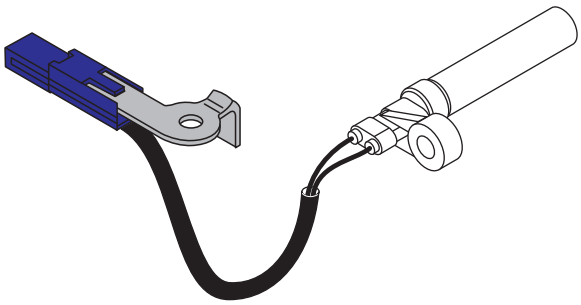

Copyright © 2010 ATSG

Figure 5

WWW.ALL-TRANS.BY

SPEED SENSOR LOCATIONS

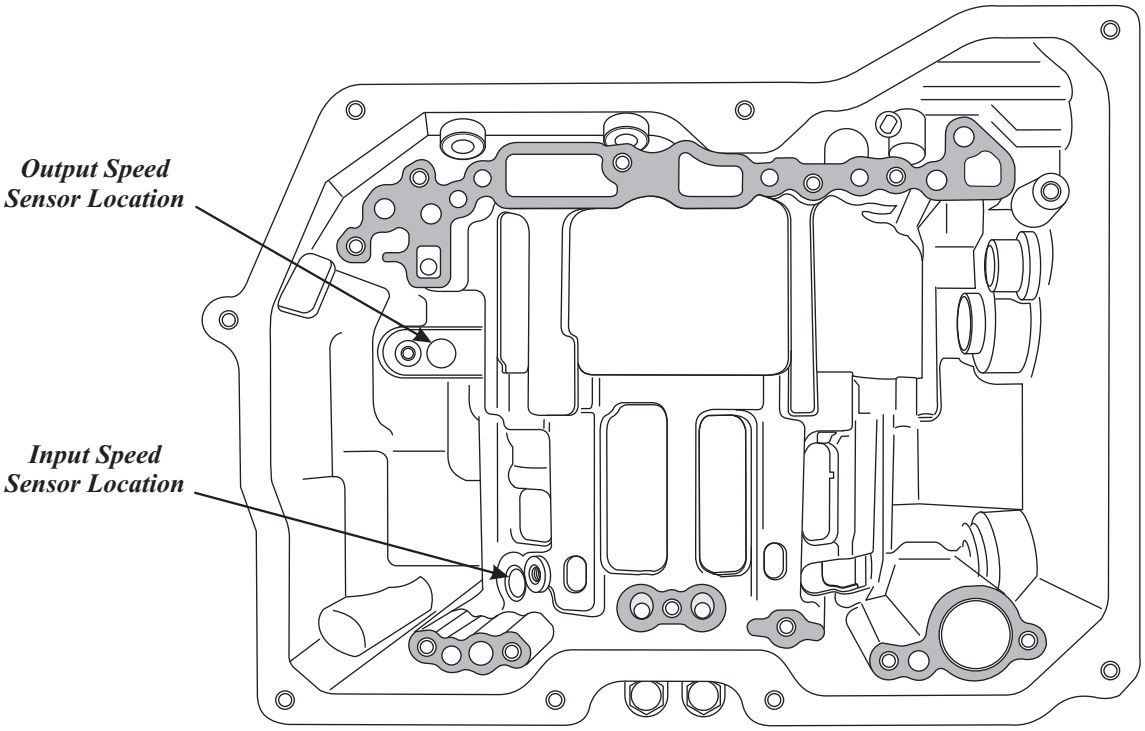

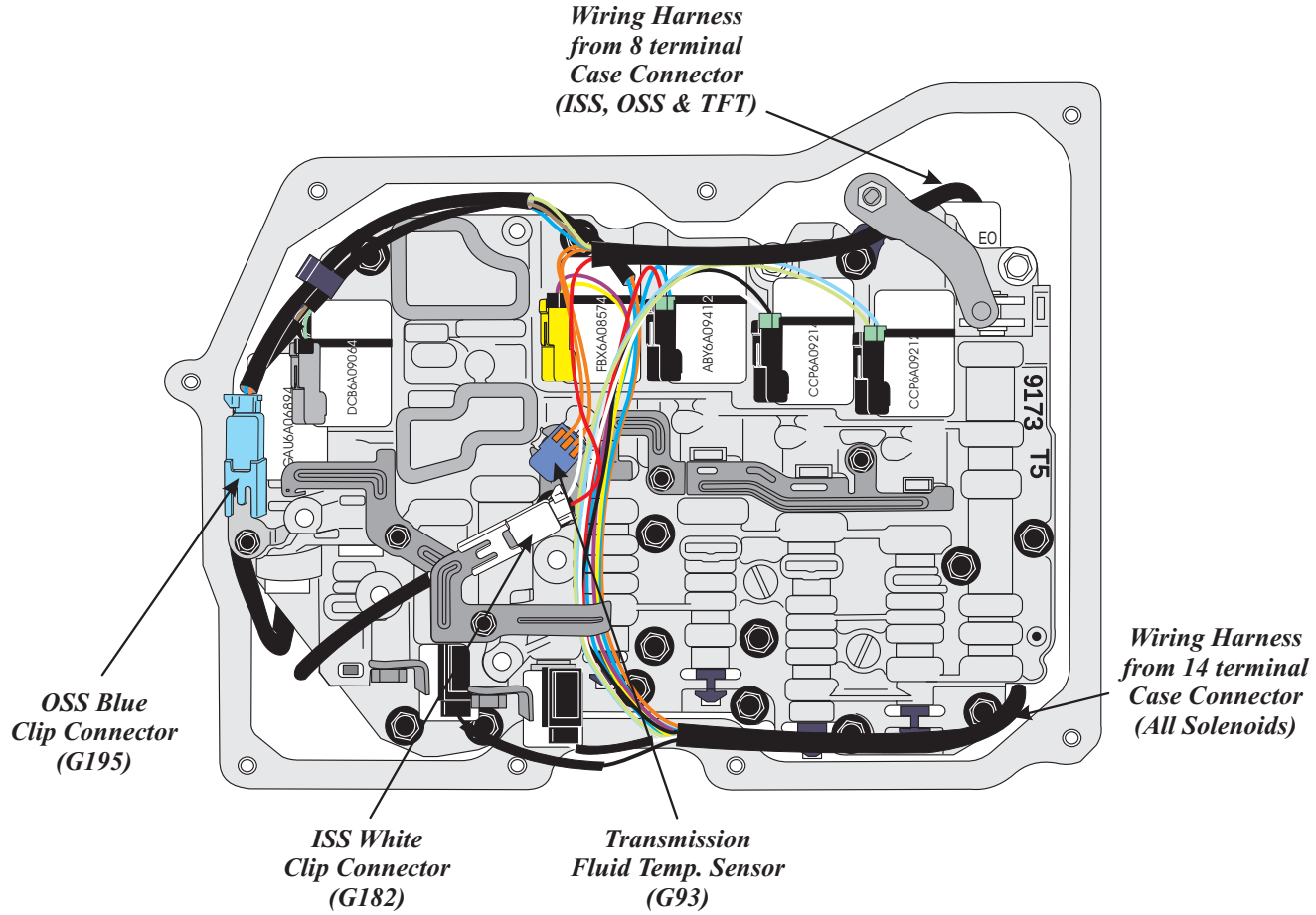

Copyright © 2010 ATSG

Figure 6

WWW.ALL-TRANS.BY

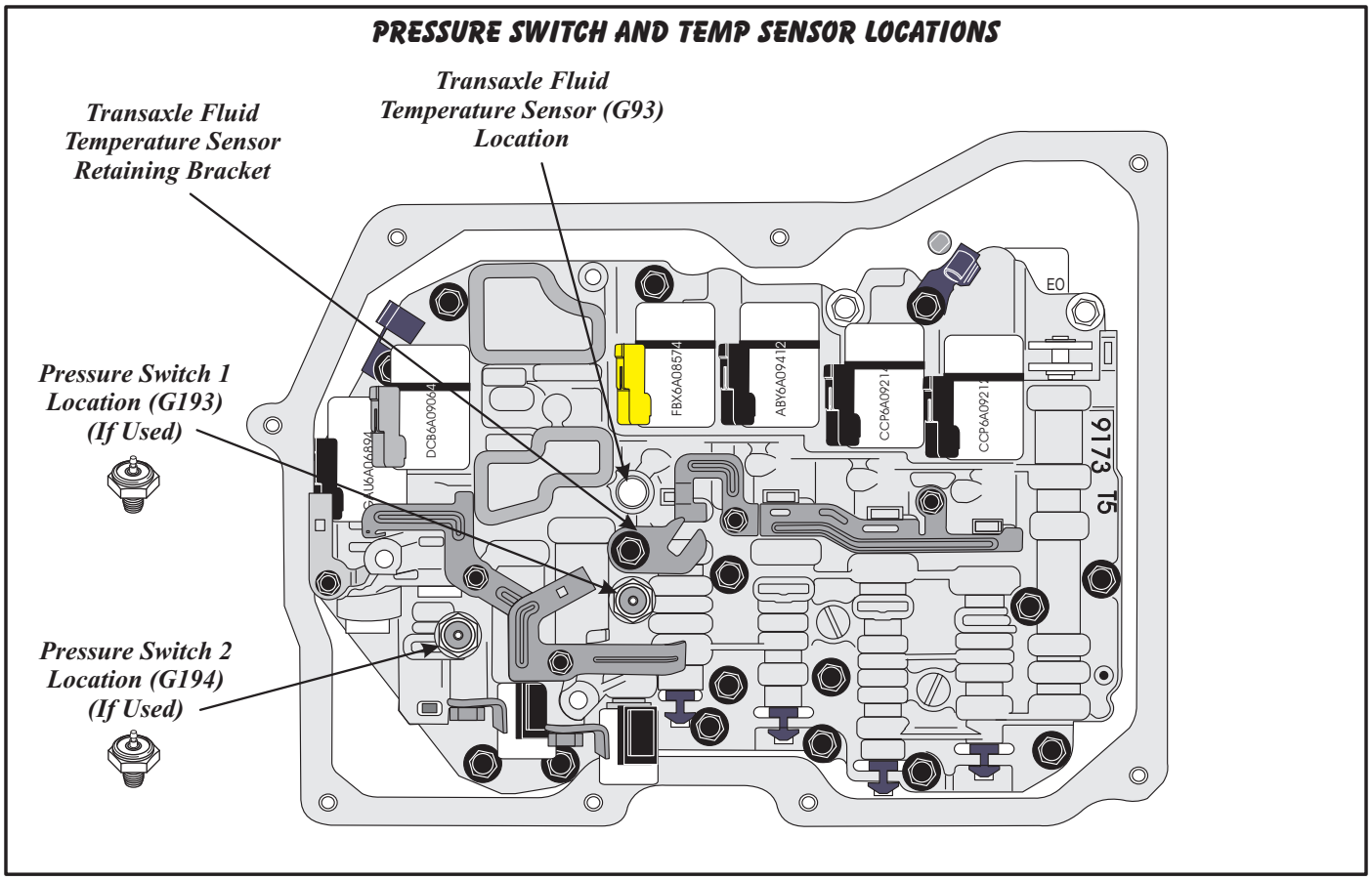

Figure 7

ELECTRONIC COMPONENTS (CONT'D)

Pressure Switches 1 (G193) And 2 (G194)

Some 09G/09M transaxles are equipped with two pressure switches that screw into the valve body casting in the locations shown in Figure 7. Both switches are "normally open" switches that connect to ground when pressure exceeds approx. 44 psi and are used to verify valve movement in the valve body assembly.

Pressure Switch 1 (G193) is used to verify activation of the K-1 clutch.

Pressure Switch 2 (G194) is used to verify activation of the B-2 clutch. Therefore, pressure switch 2 is closed in tiptronic mode only, 1st gear. The only other time the B-2 clutch is required is in reverse (R) gear. Pressure Switch 2 does not close in the reverse position, as reverse is engaged by the manual valve hydraulically.

Note: Both pressure switches were eliminated in all 09G transaxles from June 2004 on.

TRANSAXLE FLUID TEMP SENSOR (G93)

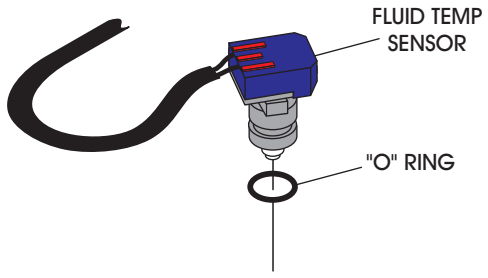

Temperature F° (C°)	Resistance
-22°F (-30°C)	37K - 51K Ohms
50°F (10°C)	5K - 8K Ohms
77°F (25°C)	3K - 5K Ohms
230°F (110°C)	230 - 265 Ohms
293°F (145°C)	100 - 120 Ohms

Copyright © 2010 ATSG

Figure 8

WWW.ALL-TRANS.BY

ELECTRONIC COMPONENTS (CONT'D)

Transaxle Fluid Temp Sensor (G93)

The Transaxle Fluid Temp Sensor (G93) is located in the valve body and is mounted with a retaining plate, as shown in Figure 7. Notice in Figure 8 that an "O" ring is required, as it is mounted into an oil passage. The TFT is an integral part of the 8-way case connector and wire harness assembly.

The TFT is a negative temperature coefficient sensor, which means that as temperature rises the resistence decreases, as shown in Figure 8.

Should the TFT fail, a substitute value is generated from the engine temperature and operating duration. There will be no controlled operation (ramping) of the converter clutch (ON or Off only) and no shift adapt pressures, which usually results in harsh engagements.

Solenoid Identification And Location

The 09G/09M uses a total of 8 different solenoids located in the valve body that are used to apply or release the clutches, control the main line pressure and apply or release the torque converter clutch. They are identified and their locations are shown in Figure 9.

There are three different types of solenoids used in this unit. There are two On/Off solenoids, one "Normally Vented" Pulse Width Modulated (PWM) solenoid, and the other five are "Normally Applied" Pulse Width Modulated (PWM) solenoids.

Refer to Figure 10 for their individual functions and Figure 9 for their locations in the valve body.

SOLENOID IDENTIFICATION

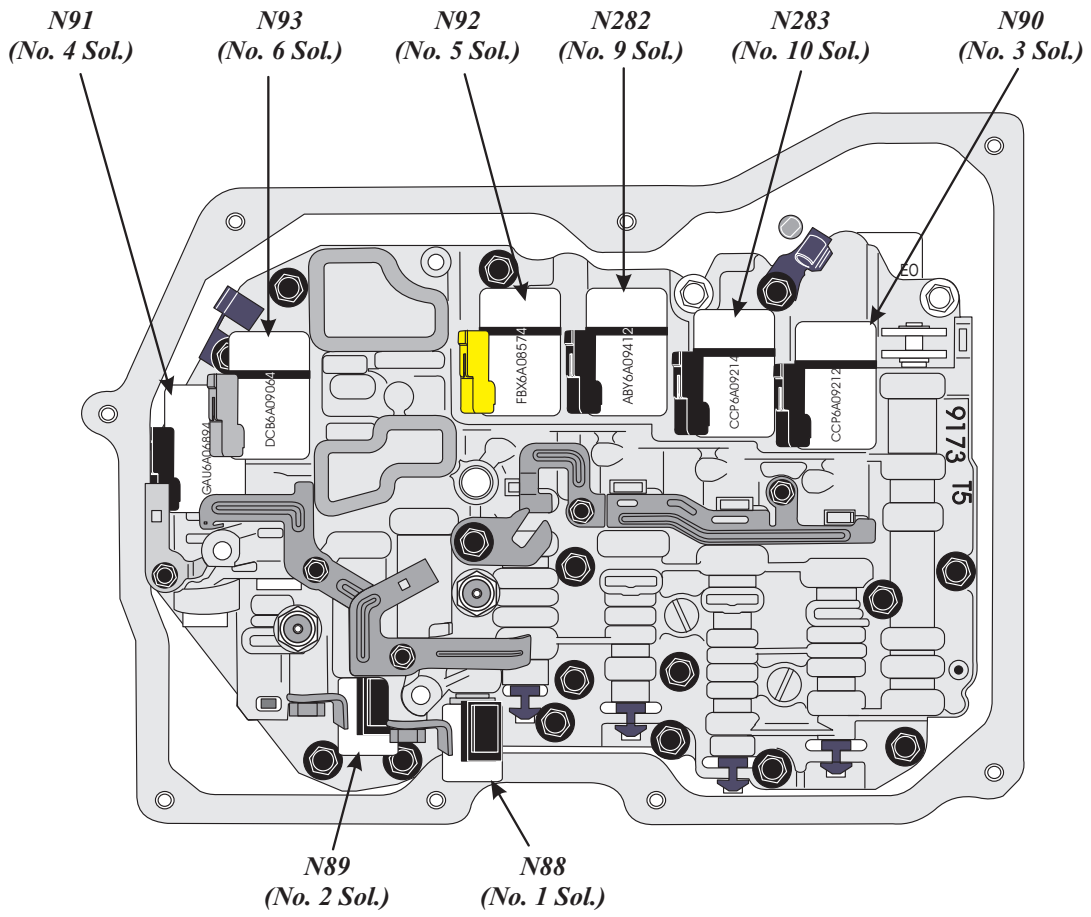

Copyright © 2010 ATSG

Figure 9

WWW.ALL-TRANS.BY

INDIVIDUAL SOLENOID FUNCTION AND RESULT OF FAILURE

N88 Solenoid (No. 1 Solenoid)
The N88 Solenoid is an ***On/Off*** solenoid and is On and Open in gears 4th through 6th. If this solenoid fails in the Closed (Off) position, 4th through 6th gear will not be available.

N89 Solenoid (No. 2 Solenoid)
The N89 Solenoid is also an ***On/Off*** solenoid and is On and Open, to allow the apply of the torque converter clutch. When both the N88 and N89 solenoids are energized at the same time, the B2 brake clutch is applied in Tiptronic 1st Gear (Manual Low). If the N89 Solenoid fails in the Closed (Off) position, there will be no torque converter clutch apply and no engine braking in Tiptronic 1st gear (Manual Low).

N90 Solenoid (No. 3 Solenoid)
The N90 Solenoid is a ***normally applied***, pulse width modulated solenoid controlling the apply and release of the K3 Clutch. When this solenoid is fully Off, the K3 clutch is fully applied. If this solenoid fails in the Off (Normally Applied) position, 3rd, 5th and Reverse shifts may be firm.

N91 Solenoid (No. 4 Solenoid)
The N91 Solenoid is a ***normally vented***, pulse width modulated solenoid controlling the apply and release of the converter clutch, with the ability to ramp the apply and release. When this solenoid is fully Off, the converter clutch is fully released. If this solenoid fails in the Off (Normally Vented) position, there will be no converter clutch application.

Solenoid N92 (No. 5 Solenoid)
The N92 Solenoid is a ***normally applied,*** pulse width modulated solenoid controlling the apply and release of the K1 Clutch. When this solenoid is fully Off, the K1 clutch is fully applied. If this solenoid fails in the Off (Normally Applied) position, 1st through 4th shifts may be firm.

Solenoid N93 (No. 6 Solenoid)
The N93 Solenoid is a ***normally applied***, pulse width modulated solenoid and controls the main line pressure. When this solenoid is fully Off, maximum line pressure is the result. If this solenoid fails in the Off (Normally Applied) position, all shifts will be harsh.

Solenoid N282 (No. 9 Solenoid)
The N282 Solenoid is a ***normally applied***, pulse width modulated solenoid controlling the apply and release of the K2 Clutch. When this solenoid is fully Off, the K2 clutch is fully applied. If this solenoid fails in the Off (Normally Applied) position, 4th, 5th and 6th shifts may be firm.

Solenoid N283 (No. 10 Solenoid)
The N283 Solenoid is a ***normally applied***, pulse width modulated solenoid controlling the apply and release of the B1 Clutch. When this solenoid is fully Off, the B1 clutch is fully applied. If this solenoid fails in the Off (Normally Applied) position, 2nd and 6th shifts may be firm.

Note: Refer to Figure 14 for Solenoid Application chart and Clutch Application chart for each gear. You will also find an observed Amperage chart from the actual vehicle that you can use for comparison. This should make the diagnosis process much easier for the vehicle that you are repairing.

Copyright © 2010 ATSG

Figure 10

WWW.ALL-TRANS.BY

ELECTRONIC COMPONENTS (CONT'D)

SOLENOID OPERATION

On/Off Solenoids (N88), (N89)

These solenoids both operate in exactly the same manner, as shown in Figure 11, based on commands from the TCM. Both of the On/Off solenoids are "Normally Closed".

These two solenoids operate in conjunction with the Pulse Width Modulated (PWM) solenoids to provide the proper gear ratio for the current road conditions.

Refer to Figure 11 for operational checks. Check these solenoids for proper resistance with the positive lead of Ohm Meter to the terminal and the negative lead to the case of the solenoid. When comparing On/Off solenoids, resistance should be within .5 Ohms of one another.

PWM Solenoid (N91)

PWM Solenoid (N91) operates exactly the opposite of the other PWM solenoids, in that it is "Normally Vented", as shown in Figure 12.

Notice that the solenoid feed oil is fed through a .032" orifice, down the side of the solenoid and back through a passage to either TCC feed or to exhaust, depending on whether the solenoid is On or Off, as shown in Figure 12. Check these solenoids for proper resistance with the leads of the Ohm Meter across the terminals. When comparing PWM solenoids, resistance should be within .5 Ohms of one another.

PWM Solenoids (N90), (N92), (N93), (N282), (N283)

PWM Solenoids (N90), (N92), (N93), (N282), and (N283) operate exactly the opposite of the (N91) PWM solenoid, as they are "Normally Applied", as shown in Figure 13.

Notice that the solenoid feed oil is fed through a .032" orifice, down the side of the solenoid and back through a passage to solenoids assigned component or to exhaust, depending on whether the solenoid is On or Off, as shown in Figure 13. Check these solenoids for proper resistance with the leads of the Ohm Meter across the terminals.

Refer to Figure 10 for the component assigned to each of these PWM solenoids. When comparing PWM solenoids, resistance should be within .5 Ohms of one another.

Note: Refer to Figure 14 for Solenoid Application chart and Clutch Application chart for each gear. You will also find an observed Amperage chart from the actual vehicle that you can use for comparison. This should make the diagnosis process much easier for the vehicle that you are repairing.

Electronic Components Continued on Page 14

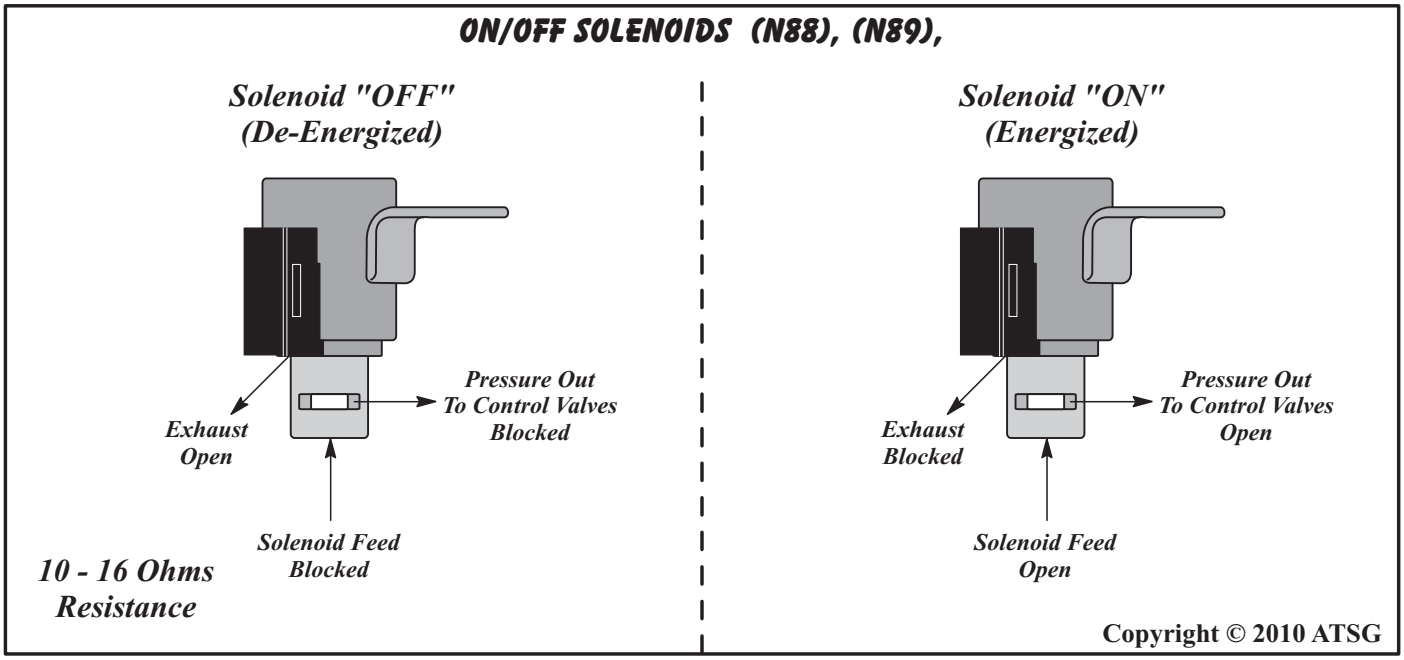

Figure 11

WWW.ALL-TRANS.BY

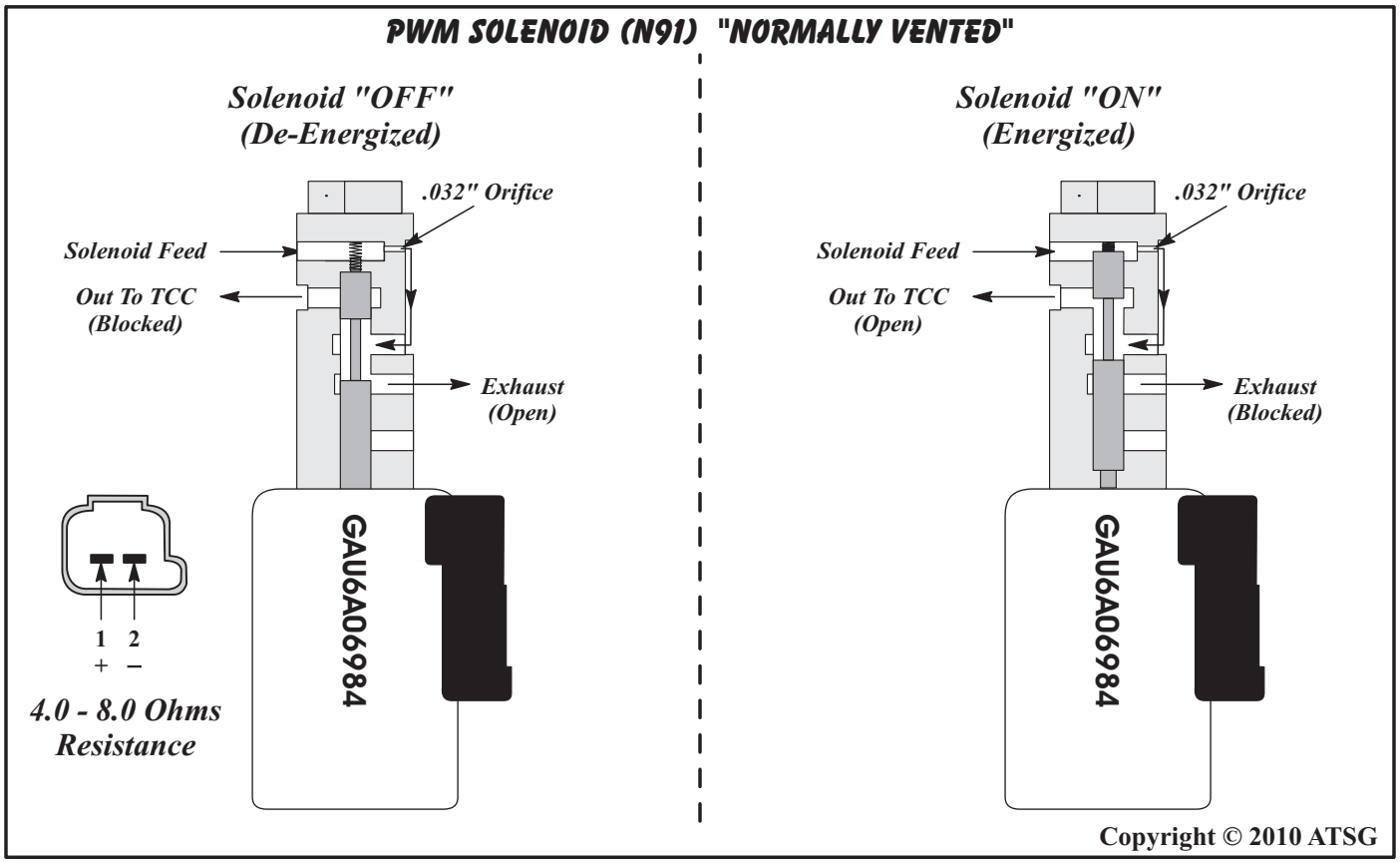

Figure 12

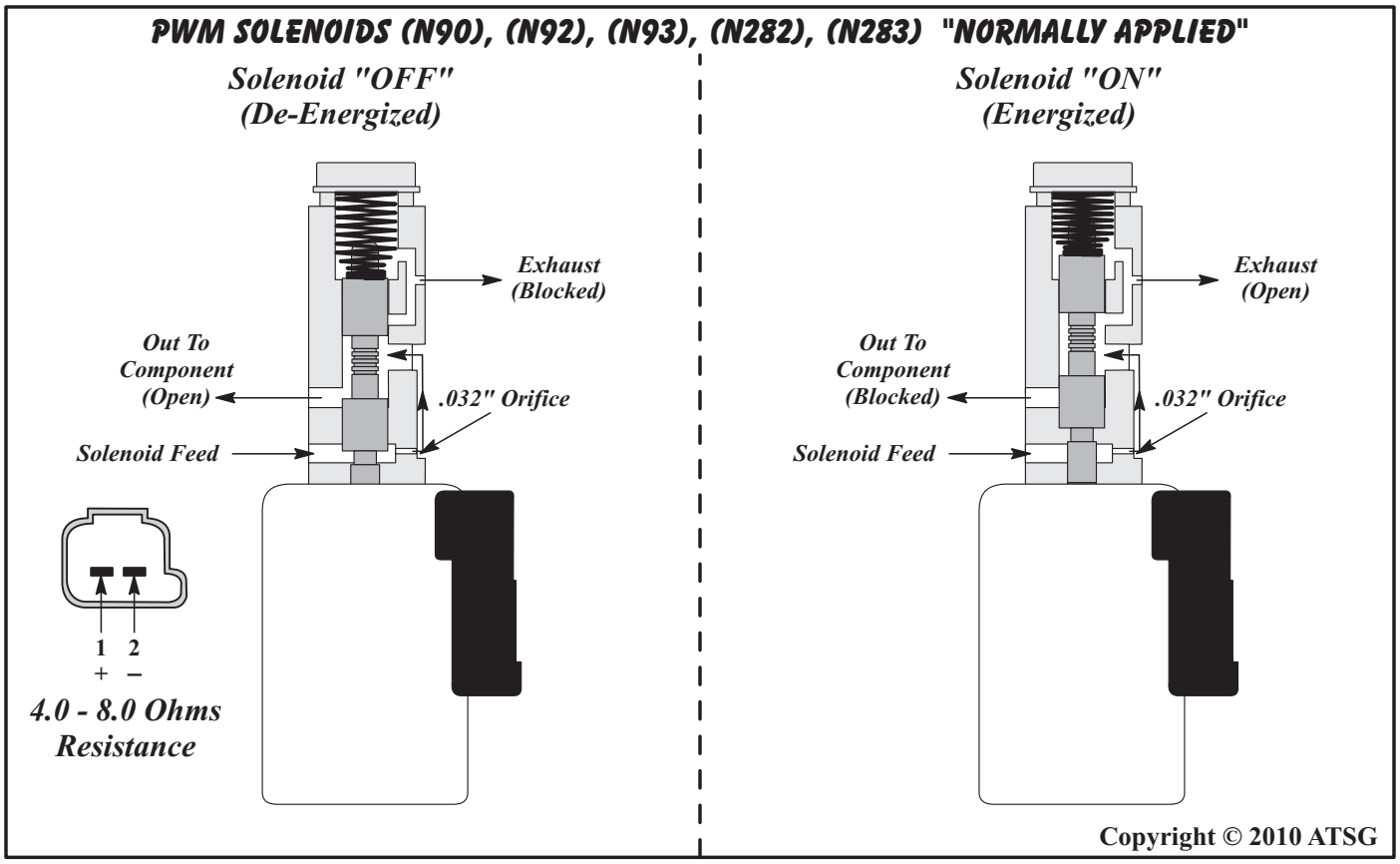

Figure 13

WWW.ALL-TRANS.BY

SHIFT SOLENOID AND CLUTCH APPLICATION CHART

Gear Shift Position	Solenoid Shift Sequence								Clutch Application Chart					
	On/Off Solenoids		Pressure Control Solenoids						Clutch and Freewheel Components					
	N89 SV-2	N88 SV-1	N92 SV-5	N282 SV-9	N90 SV-3	N283 SV-10	N93 SV-6	N91 SV-4	K1	K2	K3	B1	B2	F1
Park			OFF	OFF	ON	ON	PWM							
Neutral			ON	ON	ON	ON	PWM							
Reverse			ON	ON	OFF	ON	PWM				ON		ON	
1st Gear	T	T	OFF	ON	ON	ON	PWM		ON					ON
2nd Gear			OFF	ON	ON	OFF	PWM	PWM	ON			ON		
3rd Gear	T/To	To	OFF	ON	OFF	ON	PWM	PWM	ON		ON			
4th Gear	T/To	To	OFF	OFF	ON	ON	PWM	PWM	ON	ON				
5th Gear	T/To	To	ON	OFF	OFF	ON	PWM	PWM		ON	ON			
6th Gear	ON	To	ON	OFF	ON	OFF	PWM	PWM		ON		ON		

T = On in Tiptronic Mode
To = Solenoid is toggled On to Off

SOLENOID OBSERVED AMPERAGE CHART

SOLENOID	RANGE				GEAR					
	Park	Reverse	Neut	Drive 1	Manual 1	2	3H 3M	4H 4M	5H 5M	6H 6M
SV5-N92 (K1)	.100A	.980A	.980A	.100A	.100A	.100A	.100A	.100A	.980A	.980A
SV9-N282 (K2)	.100A	.980A	.980A	.980A	.980A	.980A	.980A	.100A	.100A	.100A
SV3-N90 (K3)	.980A	.100A	.980A	.980A	.980A	.980A	.100A	.980A	.100A	.980A
SV10-N283 (B1)	.980A	.980A	.980A	.980A	.980A	.100A	.980A	.980A	.980A	.100A
SV6-N93 (LP)	.980A	.980A	.980A	.980A	.740A	.860A	.980A	.980A	.740A	.740A
SV4-N91 (TCC)	.200A	.200A	.200A	.200A	.200A	.200A	.200A .990A	.200A .990A	.200A .990A	.200A .990A
SV2-N89	0	0	0	0	1	0	3H=0 3M=1	4H=0 4M=1	5H=0 5M=1	6H=0 6M=1
SV1-N88	0	0	0	0	1	0	0*-1	0*-1	0*-1	0*-1

.100A= Very Low amperage Solenoid OFF
.980A= Very High amperage Solenoid ON

SV1&2-N88&89
0 =OFF
1=ON
0-1= OFF or ON during shift transitions*

3H = 3rd Gear TCC OFF
3M = 3rd Gear TCC ON (This applies to gears 3-6)

Solenoids SV3, 5, 9 and 10 are Normally Applied, which applies their assigned component when they are Off. They are Energized (On) to release their assigned component. These solenoids are also Modulated, to control their assigned component apply and release rates. Consult the charts above to compare the amperage to clutch application.

Solenoid SV6 (N93) is modulated based on engine load to control main line pressure. Amperage will decrease to increase main line pressure.

Solenoid SV4 (N91) is modulated to control Torque Converter Clutch (TCC) apply and release rates, but dependends on the SV2 (N89) solenoid to be On to stroke the TCC switch valve so that N91 can complete its assigned task. There will be situations during Manual Tiptronic shifts, SV4 (N91) amperage will indicate .500 - .700 amps and the TCC will be Off, as SV2 (N89) is "0" which indicates Off.

Copyright © 2010 ATSG

Figure 14

WWW.ALL-TRANS.BY

ELECTRONIC COMPONENTS (CONT'D)

Pass-Thru Case Connectors

There are 2 pass-thru case connectors and internal wire harness assemblies used on these units. One is an 8-way connector that serves all of the internal sensors and one 14-way connector that serves all of the solenoids, as shown in Figure 15.

As stated previously, the transaxle temp sensor is an integral part of the 8-way connector and wire harness assembly, as shown in Figure 15.

Continued on Page 15

8-WAY AND 14-WAY PASS-THRU CASE CONNECTORS AND HARNESS ASSEMBLIES

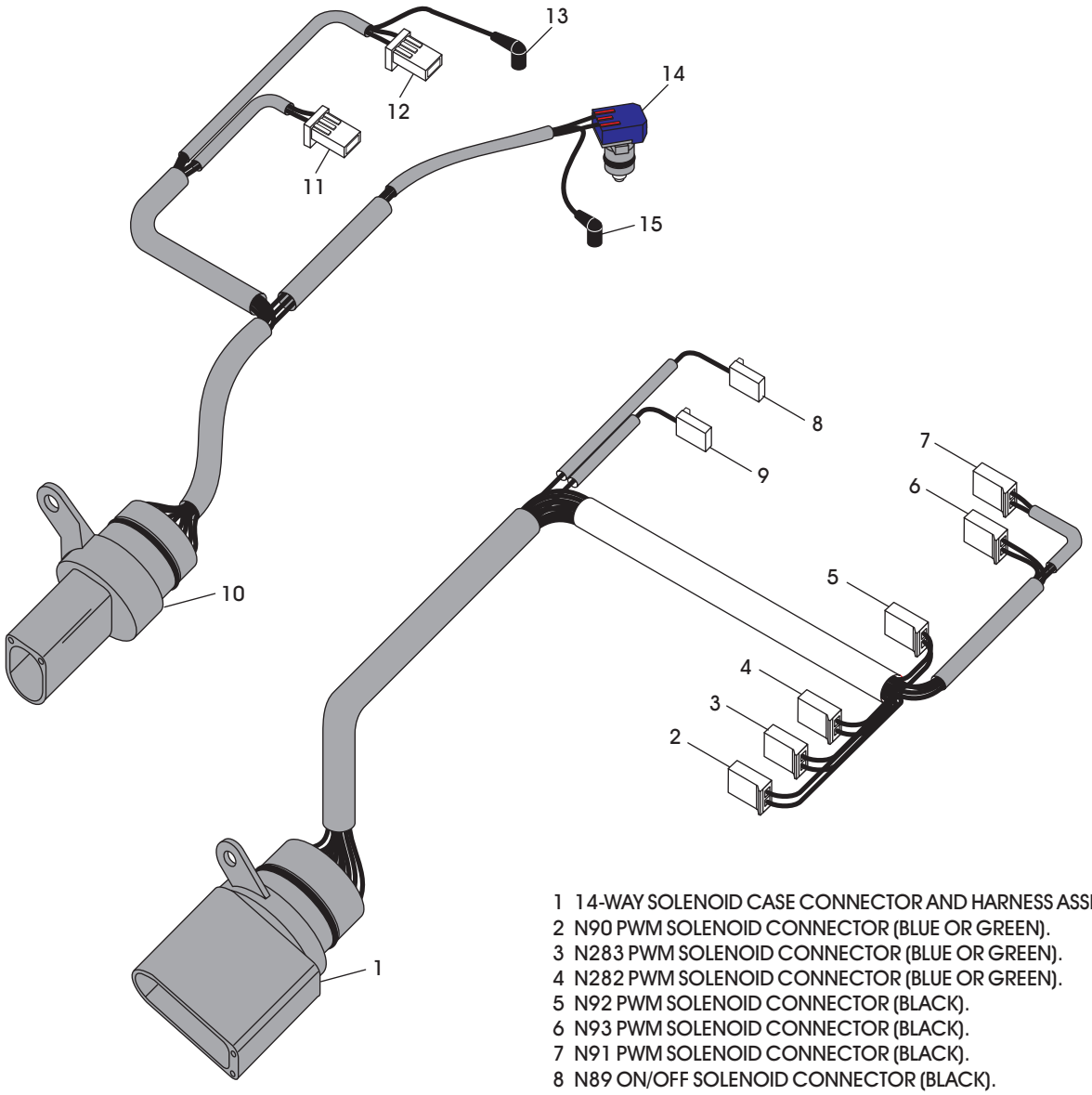

1 14-WAY SOLENOID CASE CONNECTOR AND HARNESS ASSEMBLY.
2 N90 PWM SOLENOID CONNECTOR (BLUE OR GREEN).
3 N283 PWM SOLENOID CONNECTOR (BLUE OR GREEN).
4 N282 PWM SOLENOID CONNECTOR (BLUE OR GREEN).
5 N92 PWM SOLENOID CONNECTOR (BLACK).
6 N93 PWM SOLENOID CONNECTOR (BLACK).
7 N91 PWM SOLENOID CONNECTOR (BLACK).
8 N89 ON/OFF SOLENOID CONNECTOR (BLACK).
9 N88 ON/OFF SOLENOID CONNECTOR (BLACK).
10 8-WAY SENSOR CASE CONNECTOR AND HARNESS ASSEMBLY.
11 INPUT SPEED SENSOR CONNECTOR (WHITE).
12 OUTPUT SPEED SENSOR CONNECTOR (BLUE).
13 NUMBER 2 PRESSURE SWITCH CONNECTOR (SOME MODELS).
14 TRANSAXLE FLUID TEMPERATURE SENSOR.
15 NUMBER 1 PRESSURE SWITCH CONNECTOR (SOME MODELS).

Wire Harness' Vary Depending On Model And Year

Copyright © 2010 ATSG

Figure 15

WWW.ALL-TRANS.BY

ELECTRONIC COMPONENTS (CONT'D)

Pass-Thru Case Connectors (Cont'd)

The connectors however are not always in the same locations. The 09G, 09K, and Mini-Cooper will all have the 8-way sensor connector located in the left front location and the 14-way solenoid connector in the left rear location, as shown in Figure 16. Notice, also in Figure 16, that the 09M transaxle has the 8-way sensor exiting the rear of the case and the 14-way solenoid connector located where the 8-way connector is usually located. The usual location for the 14-way solenoid connector, is not used on the 09M transaxle, as it is cast closed.

The numbers that are shown in Figure 16, are the actual part numbers of the transaxle observed. Keep in mind that we have not seen all of them.

Pass-Thru Case Connectors (Cont'd)

The connectors also have a variety of different configurations and case mounting brackets. The mounting bracket is molded into the case connector as it is manufactured.

The Mini-Cooper has an 8-way connector that turns 90 degrees in upward direction after it comes out of the case, and the bracket bolts to case in the 9-O-Clock position, as shown in Figure 17. The 14-way connector is also rotated in a different configuration than the VW models.

The Volkswagen 09K transaxle observed, has the connector configurations shown in Figure 18.

Continued on Page 16

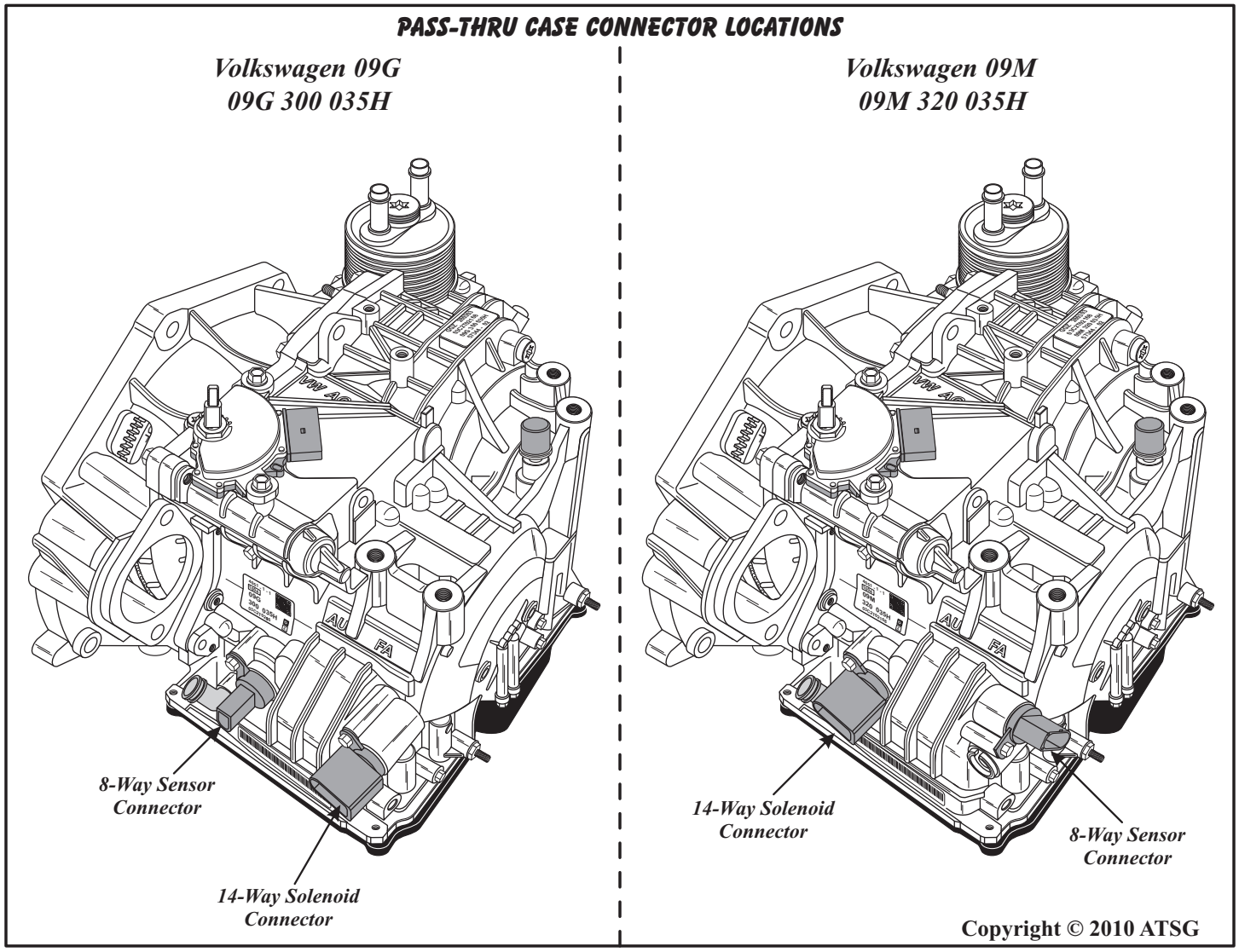

Figure 16

WWW.ALL-TRANS.BY

ELECTRONIC COMPONENTS (CONT'D)

Pass-Thru Case Connectors (Cont'd)

The Volkswagen 09G transaxles observed are shown in Figure 19. Notice on these models there are 2 different mountings for the 8-way connector to the case. "Some" cases are equipped with both mounting holes, so mark the location before you disassemble.

The 09M transaxle observed has the 8-way connector going straight out the rear, with the 14-way mounted in the left front location, as shown in Figure 20.

Note: Regardless of the direction that connector is rotated during the manufacturing process the terminal numbers will remain the same, as the numbers are rotated along with the connector on all models. Terminal number 1 will always be at the square end of the connector, as shown in the illustrations.

Refer to Figure 17, 18, 19, and 20 for case connector terminal identification of your model.

Electronic Components
Continued on Page 18

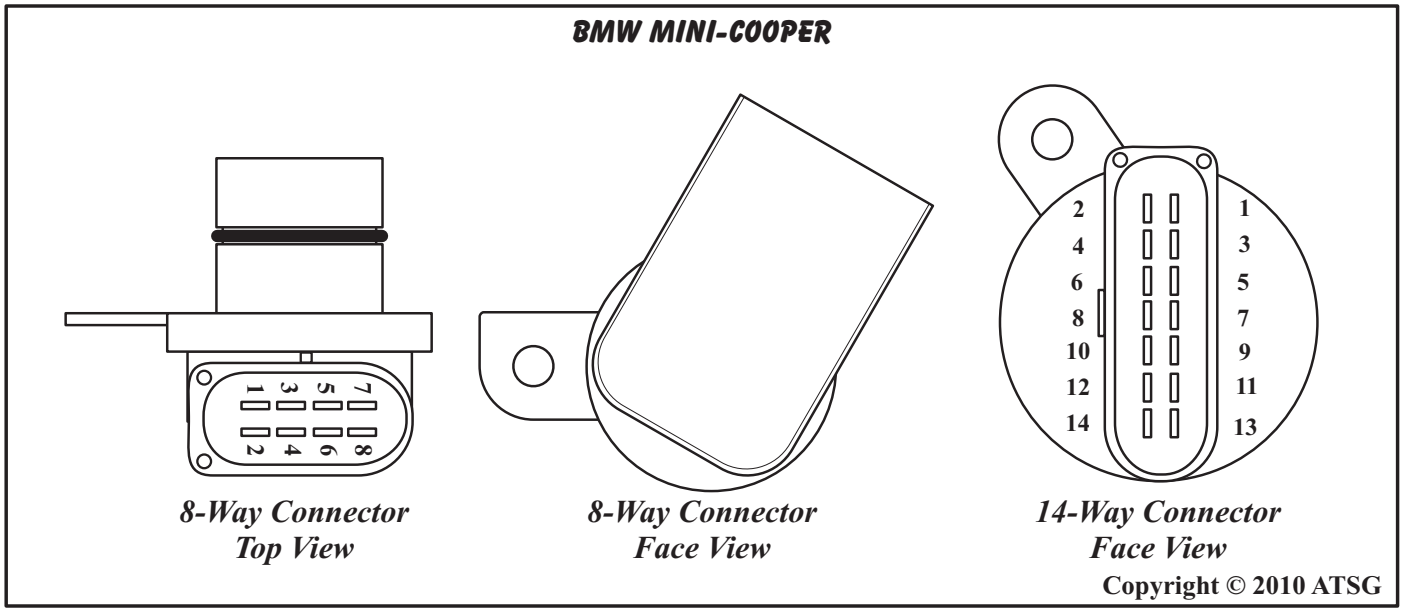

Figure 17

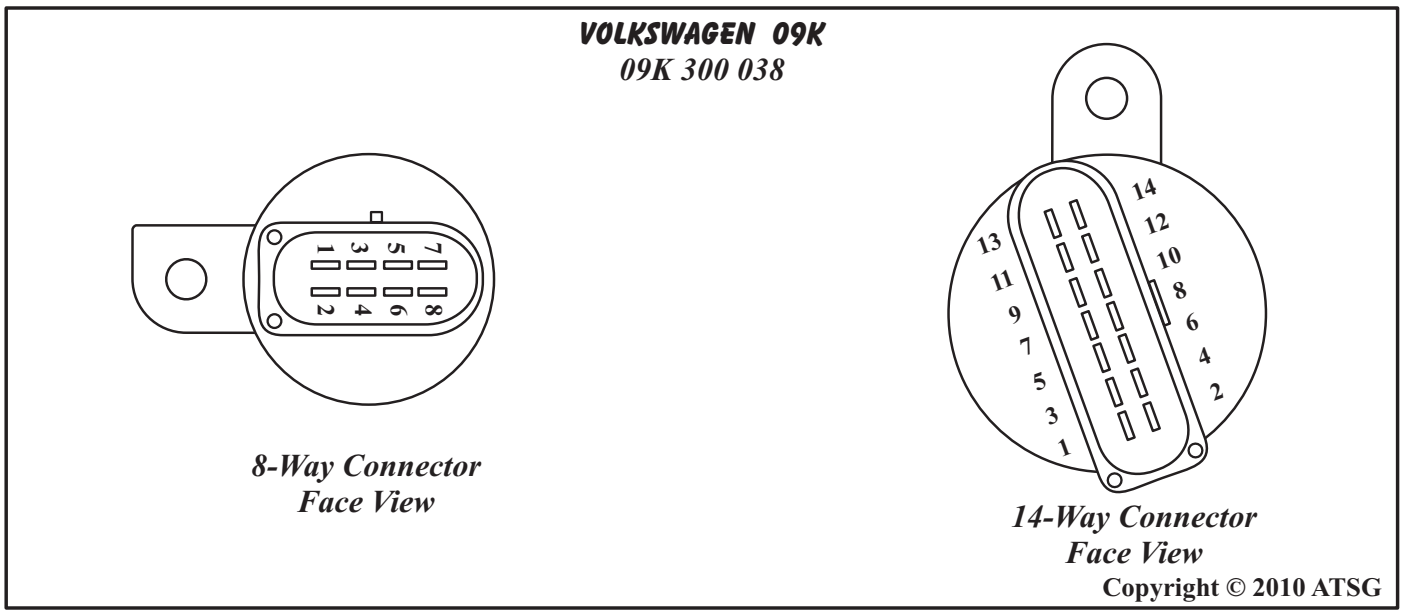

Figure 18

WWW.ALL-TRANS.BY

VOLKSWAGEN 09G
09G 300 035H

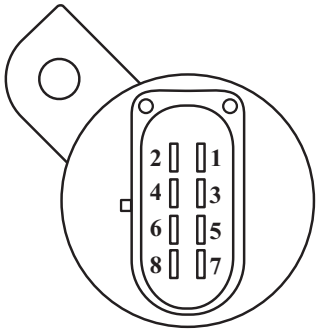

8-Way Connector Face View

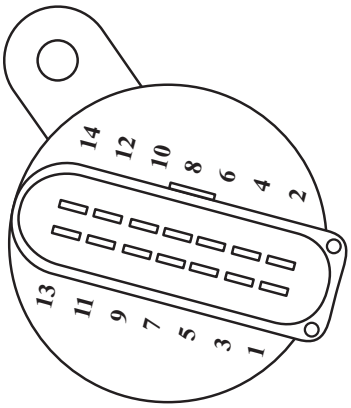

14-Way Connector Face View

VOLKSWAGEN 09G
09G 300 035P

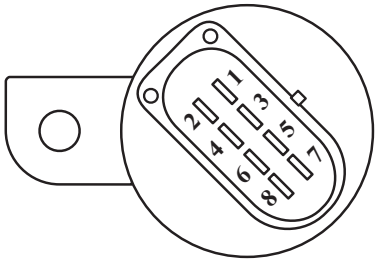

8-Way Connector Face View

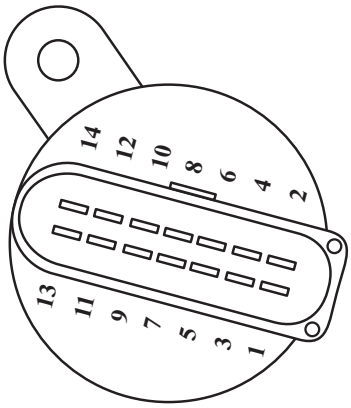

14-Way Connector Face View

Figure 19

VOLKSWAGEN 09M
09M 320 035H

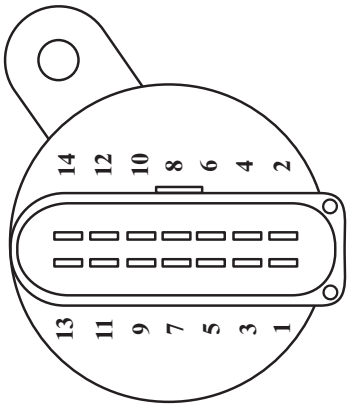

14-Way Connector Face View

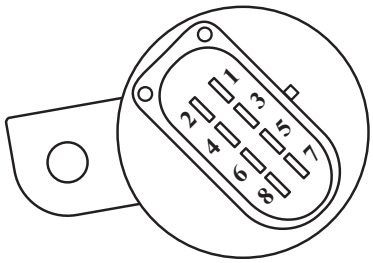

8-Way Connector Face View

Copyright © 2010 ATSG

Figure 20

WWW.ALL-TRANS.BY

RESISTANCE CHART THROUGH 14-WAY CASE CONNECTOR

Solenoid Number (Name)	*Positive Meter Lead Terminal No. (Wire Color)*	*Negative Meter Lead Terminal No. (Wire Color)*	**Ohms Resistance**
Solenoid No. 1 (N88)	**1 (White)**	**Case Ground**	***10.0 - 16.0***
Solenoid No. 2 (N89)	**2 (Black)**	**Case Ground**	***10.0 - 16.0***
Solenoid No. 3 (N90)	**7 (Lt. Blue)**	**8 (Lt. Green)**	***4.0 - 8.0***
Solenoid No. 4 (N91)	**11 (Lt. Green)**	**12 (Brown)**	***4.0 - 8.0***
Solenoid No. 5 (N92)	**3 (Yellow)**	**4 (Purple)**	***4.0 - 8.0***
Solenoid No. 6 (N93)	**13 (Green)**	**14 (Grey)**	***4.0 - 8.0***
Solenoid No. 9 (N282)	**5 (Red)**	**6 (Blue)**	***4.0 - 8.0***
Solenoid No. 10 (N283)	**9 (White)**	**10 (Black)**	***4.0 - 8.0***

When comparing resistance readings of On/Off solenoids, the resistance should be within .5 Ohms of one another.
When comparing resistance readings of PWM solenoids, the resistance should be within .5 Ohms of one another.

RESISTANCE CHART THROUGH 8-WAY CASE CONNECTOR

Sensor ID (Name)	*Positive Lead Term. No. (Color)*	*Negative Lead Term. No. (Color)*	*Temperature F° (C°)*	*Ohms Resistance*
TFT (G93)	**1 (Orange)**	**2 (Orange)**	***-22°F (-30°C)***	***37K - 51K Ohms***
			50°F (10°C)	***5K - 8K Ohms***
			77°F (25°C)	***3K - 5K Ohms***
			230°F (110°C)	***230 - 265 Ohms***
			293°F (145°C)	***100 - 120 Ohms***
ISS (G182)	**3 (White)**	**4 (Red)**	***77°F (25°C)***	***5.0M Ohms****
OSS (G195)	**5 (Tan)**	**6 (Blue)**	***77°F (25°C)***	***5.0M Ohms****
PS1 (G193)	**7 (N/A)****	**Case Ground**		***0 = Open***
PS2 (G194)	**8 (N/A)****	**Case Ground**		***0 = Open***

*** The ISS and OSS are Hall Affect Sensors and should be checked using a scope under operating conditions. The resistance values provided in the chart are from new sensors. Resistance checks on these type of sensors would, at best, inform you of either open or grounded circuits within the sensor itself.***

**** Both pressure switches were eliminated in all 09G transaxles from June 2004 on.***

Wire colors provided in these charts are "Internal" colors.

Copyright © 2010 ATSG

Figure 21

WWW.ALL-TRANS.BY

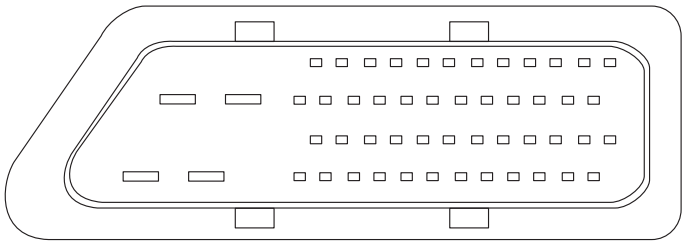

View looking into the TCM (J217)

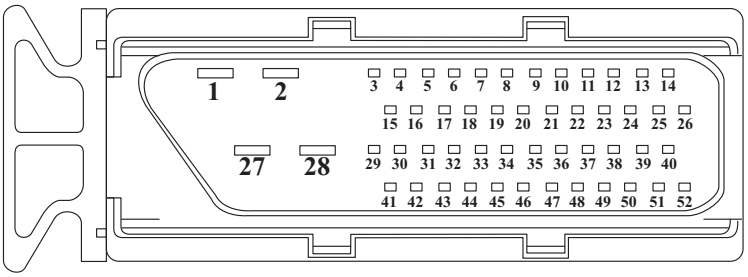

View looking into the 52 pin TCM (J217) Connector

RESISTANCE CHART THROUGH TCM 52-WAY CONNECTOR

Solenoid Number (Name)	*Positive Meter Lead Terminal No. (Wire Color)*	*Negative Meter Lead Terminal No. (Wire Color)*	*Ohms Resistance*
Solenoid No. 1 (N88)	41 (Violet/Blue)	1 or 2 (Brown)	10 - 16
Solenoid No. 2 (N89)	15 (Violet/Green)	1 or 2 (Brown)	10 - 16
Solenoid No. 3 (N90)	18 (Violet/Gray)	30 (Yellow/Gray)	4.0-8.0
Solenoid No. 4 (N91)	5 (Brown)	43 (Gray/Black)	4.0-8.0
Solenoid No. 5 (N92)	42 (Yellow/Violet)	6 (Blue/White)	4.0-8.0
Solenoid No. 6 (N93)	31 (Blue/Violet)	17 (Green/Blue)	4.0-8.0
Solenoid No. 9 (N282)	16 (Yellow/Green)	32 (Violet)	4.0-8.0
Solenoid No. 10 (N283)	4 (Green)	44 (Yellow/Black)	4.0-8.0
TFT (G93)	45 (Blue/Brown)	8 (Blue/Black)	See Figure 21
ISS (G182)	51 (Green)	39 (Black)	5.0M
OSS (G195)	38 (Black/Brown)	50 (White)	5.0M
PS-1 (G193)	24 (Green/Blue)	1 or 2 (Brown)	0 = Open
PS-2 (G194)	25 (Blue/Green)	1 or 2 (Brown)	0 = Open

External Harness wire colors provided in the chart above are from 2004 Audi TT, and may vary depending on the year, make and model of the vehicle.

Copyright © 2010 ATSG

Figure 22

WWW.ALL-TRANS.BY

ELECTRONIC COMPONENTS (CONT'D)

Transaxle Range Switch (Mulit-function Switch)

The Transaxle Range Switch (TRS) is located on the top of the transaxle, as shown in Figure 23. The TRS is a mechanical multi-position switch with 6 sliding contacts, four selector position switches, one reverse switch and one switch for positions P/N, for starting control.

Diagnosis

The only ignition voltage sent to the switch goes in at terminal 10 and goes through only the reverse switch, as shown in Figure 24. Voltage exits through terminal 8 and is sent to the reverse lamps and the TCM. This is easy to diagnos using a volt meter.

The remainder of the switches provide a ground signal for the starter relay through the P/N switch and ground signal to the TCM through the position switches, as shown in Figure 24. These switches

Diagnosis (Cont'd)

must be checked with the DVOM set to Ohms. Notice in Figure 24 that terminals 3 and 4 provide the ground into the switches. Use the Ohm meter across terminals 4 and 2 to check for the Park and Neutral positions, as shown in the chart provided in Figure 24. With the Ohm meter on terminal 3, you should have continuity across the terminals shown in the chart in Figure 24, related to the position of the gear selector lever.

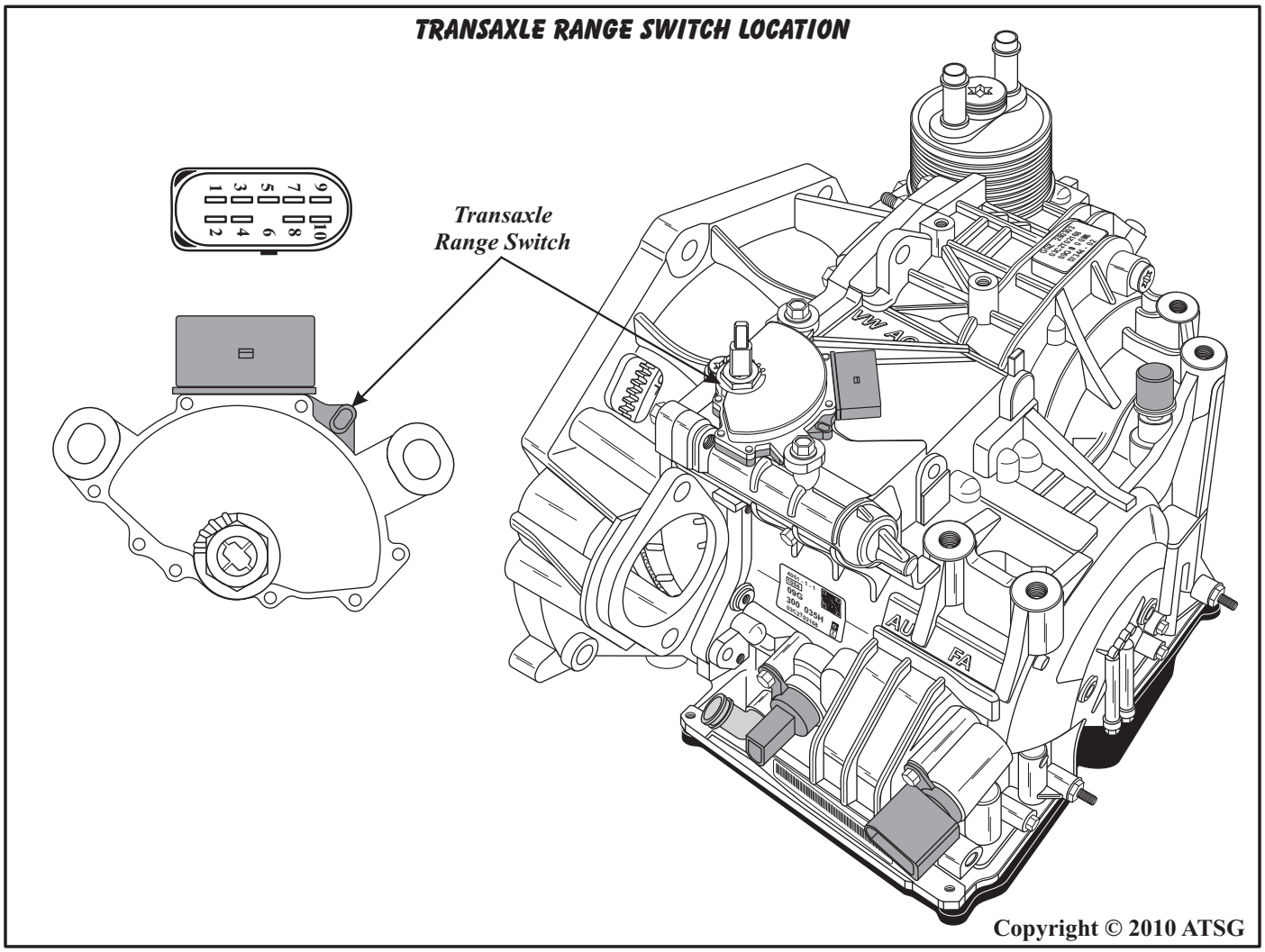

Figure 23

WWW.ALL-TRANS.BY

TRANSAXLE RANGE SWITCH SCHEMATIC FROM 2004 AUDI

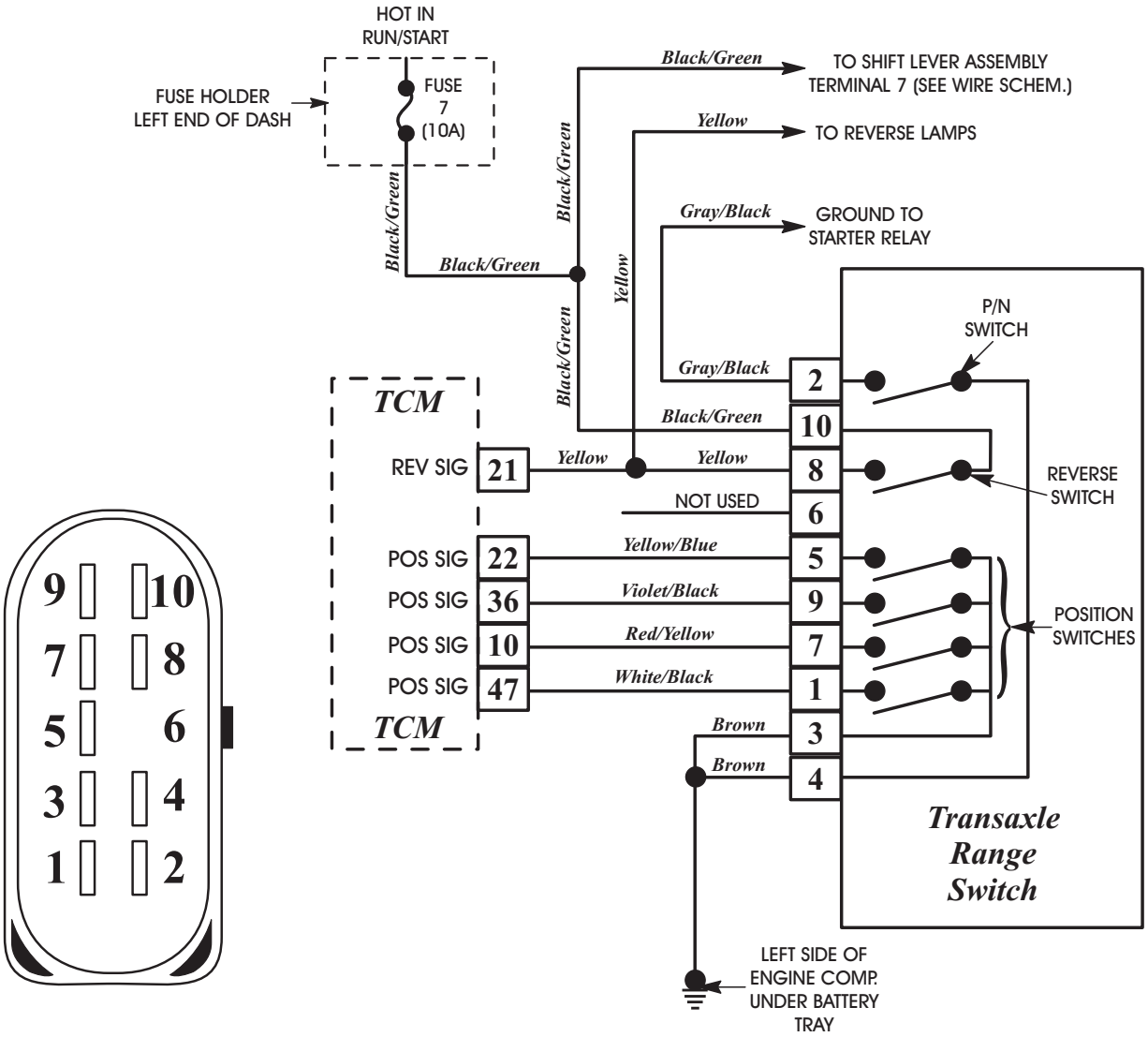

Lever	P/N Signal		Rev Signal		Position Signal					Data Block 9.4 Value	
	2	4	10	8	3	1	7	9	5	Switch Position	Transition Position
P	●	●			●	●			●	1001	
											1101
R			●	●	●	●	●			1101	
											1101
N	●	●			●		●		●	0101	
											0111
D					●	●	●	●		0110	
											0111
S					●	●	●	●	●	1111	

Copyright © 2010 ATSG

Figure 24

WWW.ALL-TRANS.BY

SHIFT QUADRANTS

Selector Lever

The appearance of the selector lever, as shown in Figure 25, will vary between the different vehicle applications. However, the operation and function remains the same with the use of the TF-60SN.

Steering Wheel Paddles

Steering wheel paddles are available as options,as shown in Figure 25, and they also will vary in appearance with the different vehicle applications. However, operation and function remains the same with the TF-60SN.

Selector Lever Positions

P When the "Park" position is selected, there is no powerflow through the transaxle. The parking pawl is engaged which locks the output shaft to the case. The engine can be started and the ignition key can be removed.

R When the "Reverse" position is selected, the vehicle can be operated in a rearward direction at a reduced gear ratio.

N When the "Neutral" position is selected, there is no powerflow through the transaxle. The output shaft is not held and is free to rotate and the engine can be started. This position can also be selected while the vehicle is moving, to restart the engine if that becomes necessary.

D The "Drive" position is the normal position for most forward gear operations. The Drive position provides automatic upshifts and downshifts, apply and release of the converter clutch, and maximum fuel economy during normal operation. Drive range allows the transaxle to operate in each of the six forward gear ratios. Downshifts are available for safe passing, by depressing the accelerator.

S When the "Sport" position is selected, the lock button must be pressed to shift into "S", the TCM will select only 1st thru 5th gears automatically using a performance-oriented shifting program.

When the Manual position is selected, shift lever in the "S" position and moved into the right hand selector gate, it enables the driver to select the range of gears by tapping the selector lever towards the "-" or "+" to cause the transaxle to downshift or upshift. These ranges can be used for conditions where it may be desirable to control the selection of gear ratios.

S - Cont'd

On models equipped with the steering wheel paddles, the paddles are used to upshift and downshift the transaxle manually, instead of the shift lever.

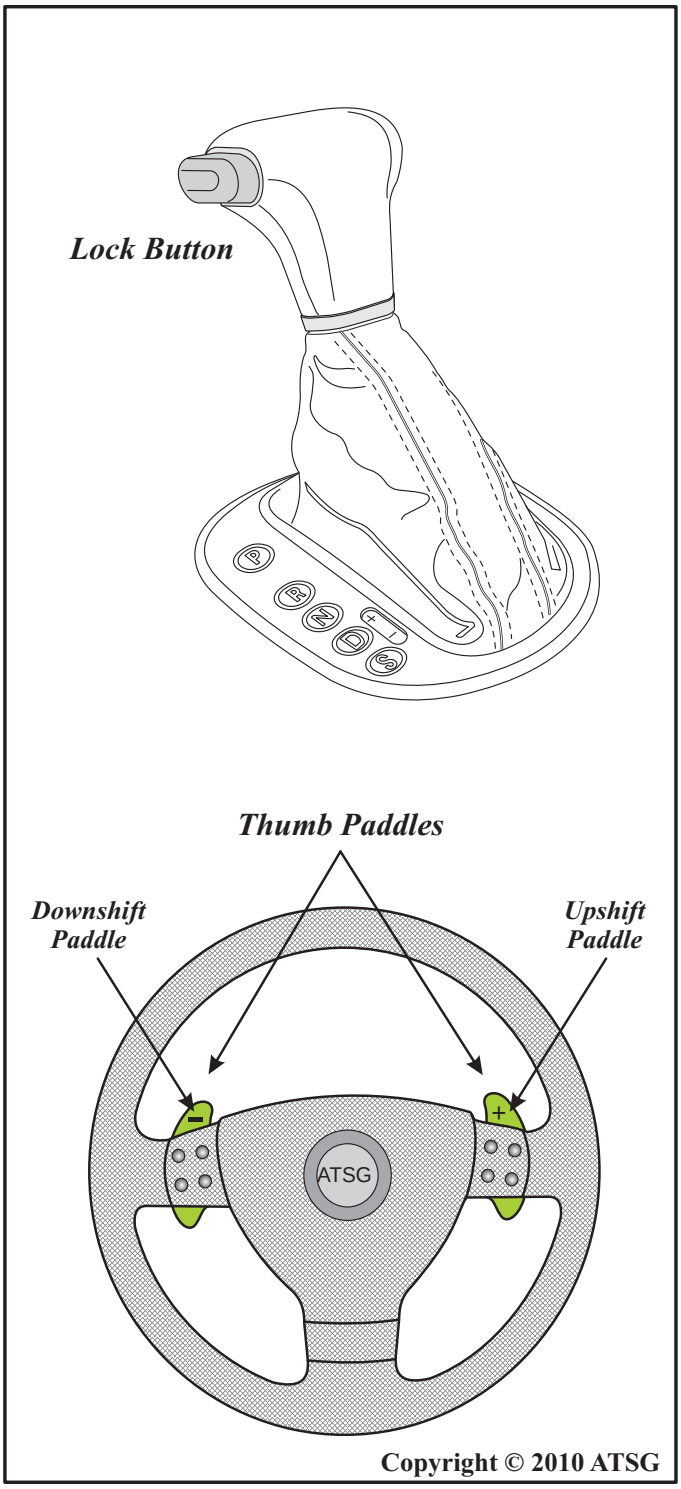

Figure 25

WWW.ALL-TRANS.BY

TIPTRONIC UPSHIFT AND DOWNSHIFT

Steering Wheel Paddles

Steering wheel paddles are available as options,as shown in Figure 25, and they also will vary in appearance with the different vehicle applications. However, operation and function remains the same with the TF-60SN. These operational paddles are found in the steering wheel on the left and right hand side, as shown in Figure 25.

Upshifts and downshifts occur by tapping the appropriate paddle. The shift signals are an input to the TCM, which in turn carries out the request.

If the Tiptronic paddles in the steering wheel are operated while in automatic mode, the TCM enters "Tiptronic Mode". If the paddles are not operated, the TCM returns to the automatic mode after a preprogramed amount of time.

In case of a signal failure, no Tiptronic functions are possible using the steering wheel paddles.

Tiptronic Shifting Strategy

- - Automatic upshifts when the maximum RPM is reached.
- - Automatic downshifts when the RPM falls below the programed minimum RPM.
- - Kickdown shifting available.
- - Acceleration from standing start in second gear by selecting 2nd before accelerating.
- - Upshift or downshift prevention.

LED Display On Instrument Panel

These vehicles are also equipped with and LED display on the instrument panel that will display the gear selected with the selector lever, as shown in Figure 26.

When the vehicle is first started, the display will be "P", as shown in Figure 26. If reverse is selected the "R" will be displayed.

When Drive is selected for the automatic forward mode the "D" will be displayed momentarily and will then go to "1", as you are still in first gear. As you are driving, the gear that the transaxle is in will be displayed on the instrument panel.

When in the Tiptronic Mode, the gear selected by pressing the paddles will be displayed in the instrument panel. Keep in mind that 2nd gear starts can be achieved using this feature. 3rd gear standing starts are not allowed.

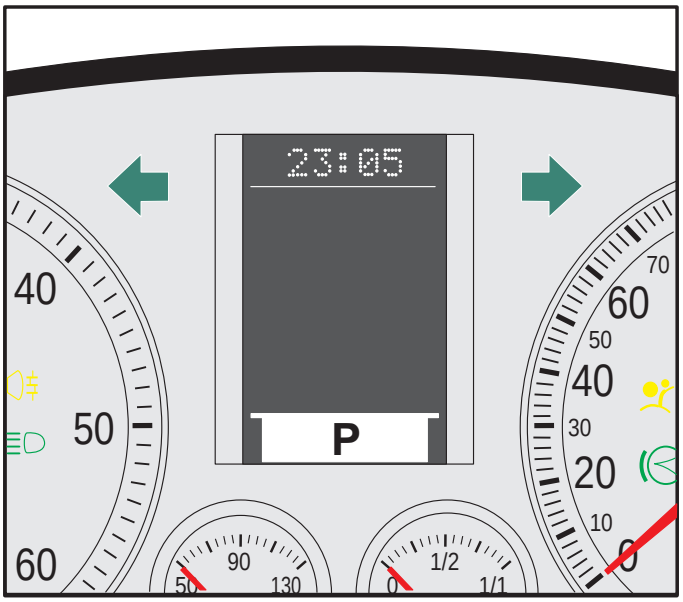

Figure 26

Emergency "Limp" Mode

In mechanical emergency running mode, 3rd gear is always engaged. If the transmission is already in 4th, 5th or 6th gear, the current gear is maintained until the selector lever is placed into the neutral position the engine is stopped.

When starting off, 3rd gear is always engaged whether the selector lever is in the D or S position. Reverse is available (R-gear locking is not active).

System pressure is controlled to the maximum value; the shifting elements are pressurized to maximum shifting pressure. This results in a hard shift when engaging the driving mode. The torque converter lock-up clutch remains off.

Towing Restrictions

When towing, the ATF pump is not operated, and therefore rotating components are not lubricated. To avoid severe damage to the transaxle, the following conditions ***must*** be met:

- - The selector lever must be in the “N” Neutral position.
- - Towing speed must not exceed 31 mph (50km/h).
- - Vehicle must not be towed further than 31 miles (50 km).

NOTE: For Jetta and Passat, if the battery is disconnected or discharged, the selector lever emergency release must be operated to shift the selector lever out of “P” into “N”.

Copyright © 2010 ATSG

WWW.ALL-TRANS.BY

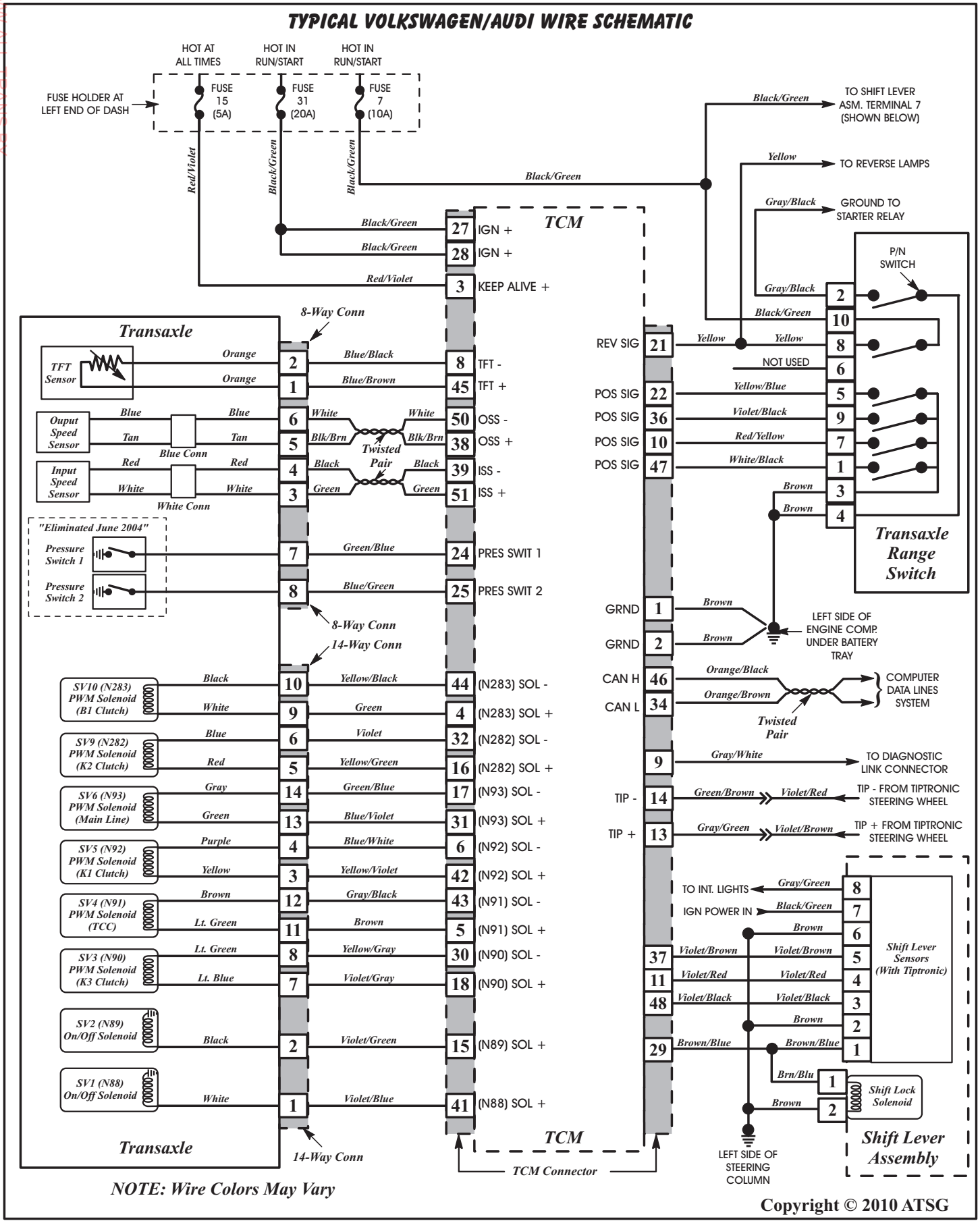

Figure 27

WWW.ALL-TRANS.BY

VOLKSWAGEN "VAG" DIAGNOSTIC TROUBLE CODES	
DTC	**DESCRIPTION**
00258	*N88-SV1 Shift Solenoid 1, Circuit Error (Open or Short)*
00260	*N89-SV2 Shift Solenoid 2, Circuit Error (Open or Short)*
00262	*N90- SV3 K3 Control Solenoid Circuit Error (Open or Short)*
00264	*N91-SV4 Torque Converter Clutch PWM Solenoid, Circuit Error (Open or Short)*
00266	*N92-SV5, K1 Control Solenoid Circuit Error (Open or Short)*
00268	*N93-SV6 Pressure Control Solenoid, Circuit Error (Open or Short)*
00293	*Transaxle Range (TR) switch F125, circuit malfunction (Implausible signal)*
00300	*Transmission Fluid Temp, (G93) circuit malfunction (Open or Short)*
00348	*N282-SV9, K2 Control Solenoid Circuit Error (Open or Short)*
00349	*N283-SV10, B1 Control Solenoid Circuit Error (Open or Short)*
00364	*System Voltage to Low*
00453	*Function restriction because of excess Trans Fluid Temp.*
00529	*TCM to ECM Error, No Engine Speed Signal G28*
00541	*ATF temp to high*
00777	*Throttle Position Sensor, No Signal CAN bus connection interupted*
01045	*Tiptronic Switch F189 implausible signal*
01166	*Engine Torque signal no signal from ECM*
01192	*Torque Converter Clutch mechanical fault (slip)*
01236	*Selector Lever Lock Solenoid, Circuit Error N110 (Open or Short)*
01312	*Drive Train Data Bus Fault, No Communication*
01314	*Engine Control Module, DTC present*
01316	*ABS Module, No Communication, or ignition switched on with TCM unplugged*
01679	*Speed signal from ABS Front Left wheel implausible*
01680	*Speed signal from ABS Front Right wheel implausible*
01681	*Speed signal from ABS Rear Left wheel implausible*
01682	*Speed signal from ABS Rear Right wheel implausible*
01683	*Wheel speed signals/vehicle speed implausible*
65535	*Control Module Faulty, (TCM)*

Copyright © 2010 ATSG

Figure 28

WWW.ALL-TRANS.BY

VOLKSWAGEN "VAG" TO OBD11 DIAGNOSTIC TROUBLE CODES		
VAG	OBD11	DESCRIPTION
16988	P0604	TCM faulty
16989	P0605	TCM faulty
16997	P0613	TCM faulty
17084	P0700	TCM faulty
17089	P0705	Multifunction Trans Range sensor F125 electrical fault
17090	P0706	Multifunction Trans Range sensor F125 implausible signal
17095	P0711	Trans Fluid Temp G93 fault in electrical circuit
17096	P0712	Trans Fluid Temp G93 signal too low
17097	P0713	Trans Fluid Temp G93 signal too high
17099	P0715	Input Speed sensor G182 circuit fault
17100	P0716	Input Speed sensor G182 Implausible signal
17101	P0717	Input Speed sensor G182 no signal
17105	P0721	Output Speed sensor G195 circuit fault
17109	P0725	Engine Speed sensor G28 circuit fault from ECM
17113	P0729	Clutch of indicated gear is faulty (wrong ratio, slip)
17114	P0730	Clutch of indicated gear is faulty (wrong ratio, slip)
17115	P0731	1st Gear (wrong ratio, slip)
17116	P0732	2nd Gear (wrong ratio, slip)
17117	P0733	3rd Gear (wrong ratio, slip)
17118	P0734	4th Gear (wrong ratio, slip)
17119	P0735	5th Gear (wrong ratio, slip)
17132	P0748	N91-SV4 Torque Converter Clutch PWM Solenoid, Circuit (Open or Short)
17135	P0751	N88-SV1 Shift Solenoid 1, Circuit Error (Open or Short to ground)
17136	P0752	N88-SV1 Shift Solenoid 1, Circuit Error (Short to Battery voltage)
17137	P0753	N88-SV1 Shift Solenoid 1, Electrical Circuit fault
17140	P0756	N89-SV2 Shift Solenoid 2, Circuit Error (Open or Short to ground)
17141	P0757	N89-SV2 Shift Solenoid 2, Circuit Error (Short to Battery voltage)
17182	P0798	N93-SV6 Pressure control Circuit Error (Open or Short)
17195	P0811	Heavy Clutch Slip
17224	P0840	Trans pressure sensor 1 G193 mechanical fault (model dependant)
17225	P0841	Trans pressure sensor 1 G193 open or short/implausible (model dependant)
17226	P0842	Trans pressure sensor 1 G193 short to ground (model dependant)
17299	P0845	Trans pressure sensor 2 G194 mechanical fault (model dependant)
17230	P0846	Trans pressure sensor 2 G194 open or short/implausible (model dependant)
17231	P0847	Trans pressure sensor 2 G194 short to ground (model dependant)
		Copyright © 2010 ATSG

Figure 29

WWW.ALL-TRANS.BY

VOLKSWAGEN "VAG" TO OBD11 DIAGNOSTIC TROUBLE CODES		
VAG	OBD11	DESCRIPTION
18010	P1602	Voltage supply too low
18255	P1847	DTC in ABS problem
18554	P2122	Throttle position sensor signal too low G79
19146	P2714	N91-SV4 Torque Converter Clutch PWM Solenoid, Circuit (Open or Short)
19147	P2715	N91-SV4 Torque Converter Clutch PWM Solenoid, Circuit (short to B+)
19148	P2716	N91-SV4 Torque Converter Clutch PWM Solenoid, electrical circuit fault
19155	P2723	N92-SV5 K1 Clutch control Solenoid, Circuit (Open or Short)
19156	P2724	N92-SV5 K1 Clutch control Solenoid, Circuit (short to B+)
19157	P2725	N92-SV5 K1 Clutch control Solenoid, electrical circuit fault
19164	P2732	N93-SV6 Pressure control Solenoid, Circuit (Open or Short)
19165	P2733	N93-SV6 Pressure control Solenoid, Circuit (short to B+)
19166	P2734	N93-SV6 Pressure control Solenoid, electrical circuit fault
		Copyright © 2010 ATSG

Figure 30

TCC Operation

Depending on driving mode, engine load and vehicle speed, the torque converter lock-up clutch is first regulated with a minimal slip and subsequently completely applied. During regulated operation, fuel consumption is reduced when compared to a released torque converter clutch and driving comfort is improved compared to a fully applied clutch. Refer to the chart in Figure 31.

Using Tiptronic in “S” mode, the torque converter lock-up clutch is applied as soon as possible. The direct power connection between the engine and transaxle improves the "sporty" driving feel.

In a climbing mode, the torque converter lock-up clutch applies in 2nd gear.

When ATF temperature is above 130º C, the regulated apply feature is prohibited and an immediate apply occurs. This helps in cooling the fluid down to a normal operating temperature.

Refer to Figure 31 for the location of the torque converter identification code.

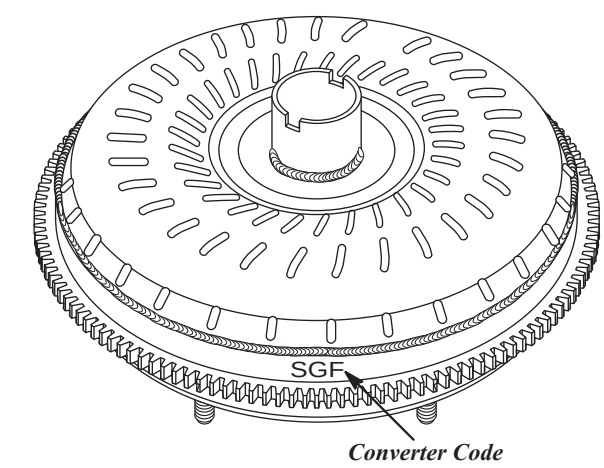

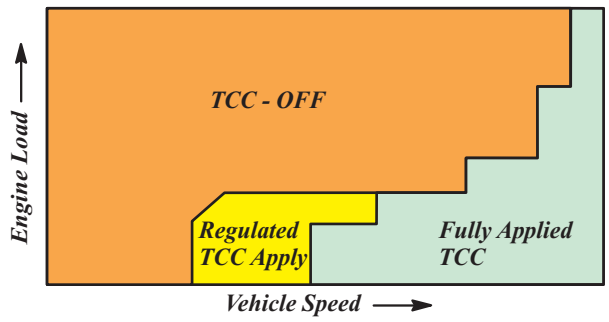

Copyright © 2010 ATSG

Figure 31

WWW.ALL-TRANS.BY

COOLER INFORMATION

Integral Cooler

Some models use an ATF cooler that is mounted on the converter housing and integrated into the engine cooling circuit, as shown in Figure 33. With this arrangement cooler fluid is sent directly into the cooler and returned to the lube circuit. Engine coolant is piped to the integral cooler and returned to the cooling system with a constant circulation.

Remote Mounted Cooler

Some models use an ATF cooler that is mounted in a remote location and cooler fluid must be sent via traditional cooler lines to the cooler. This requires entry and exit points and they are located in the transaxle case in the positions shown in Figure 32.

PRESSURE TAP INFORMATION

Pressure Tap Locations

Pressure tap locations and identification are shown in Figure 32 and 33. Only some models have the lube tap located by the integral cooler, as shown in Figure 33. All transaxles have a differential lube tap located just above the right axle seal in the case that is not shown in Figure 33.

Pressure Specifications

Observed pressure specifications are shown in Figure 34 on Page 30.

PRESSURE TAP LOCATIONS AND "REMOTE COOLER" INFORMATION

Cooler line positions shown are used "Only" in models that have a cooler mounted in a remote location and pipe transaxle fluid to the cooler. Cooler line pockets are in the main case and cooler lines are retained in the pockets with a cooler line bracket.

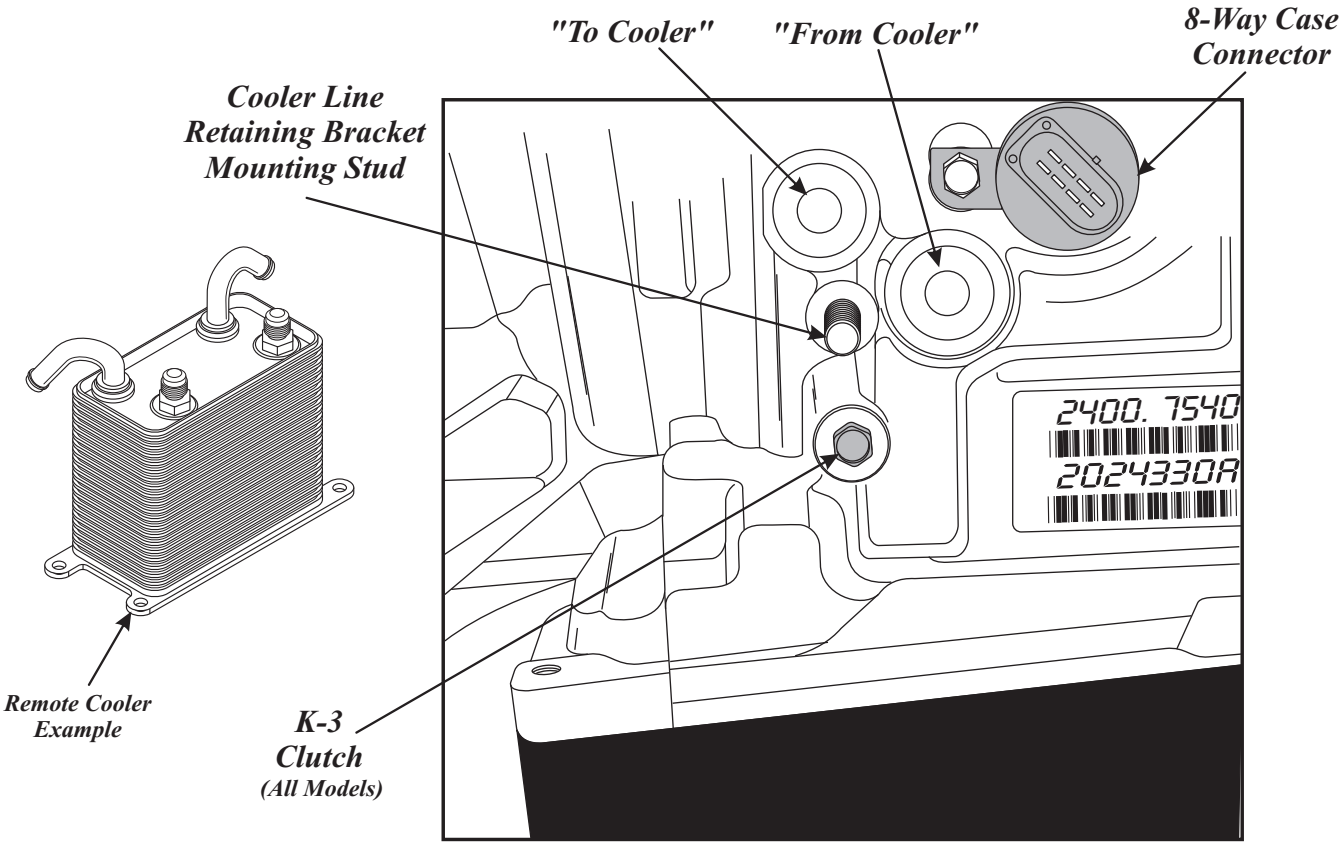

Copyright © 2010 ATSG

Figure 32

WWW.ALL-TRANS.BY

PRESSURE TAP LOCATIONS AND "INTEGRAL COOLER" INFORMATION

Models that use the "Integral Cooler" use air flow to cool the engine coolant that is sent to the integral cooler and then returned to the cooling system. The transaxle cooler fluid is fed directly into the cooler and returned to the lubrication circuit.

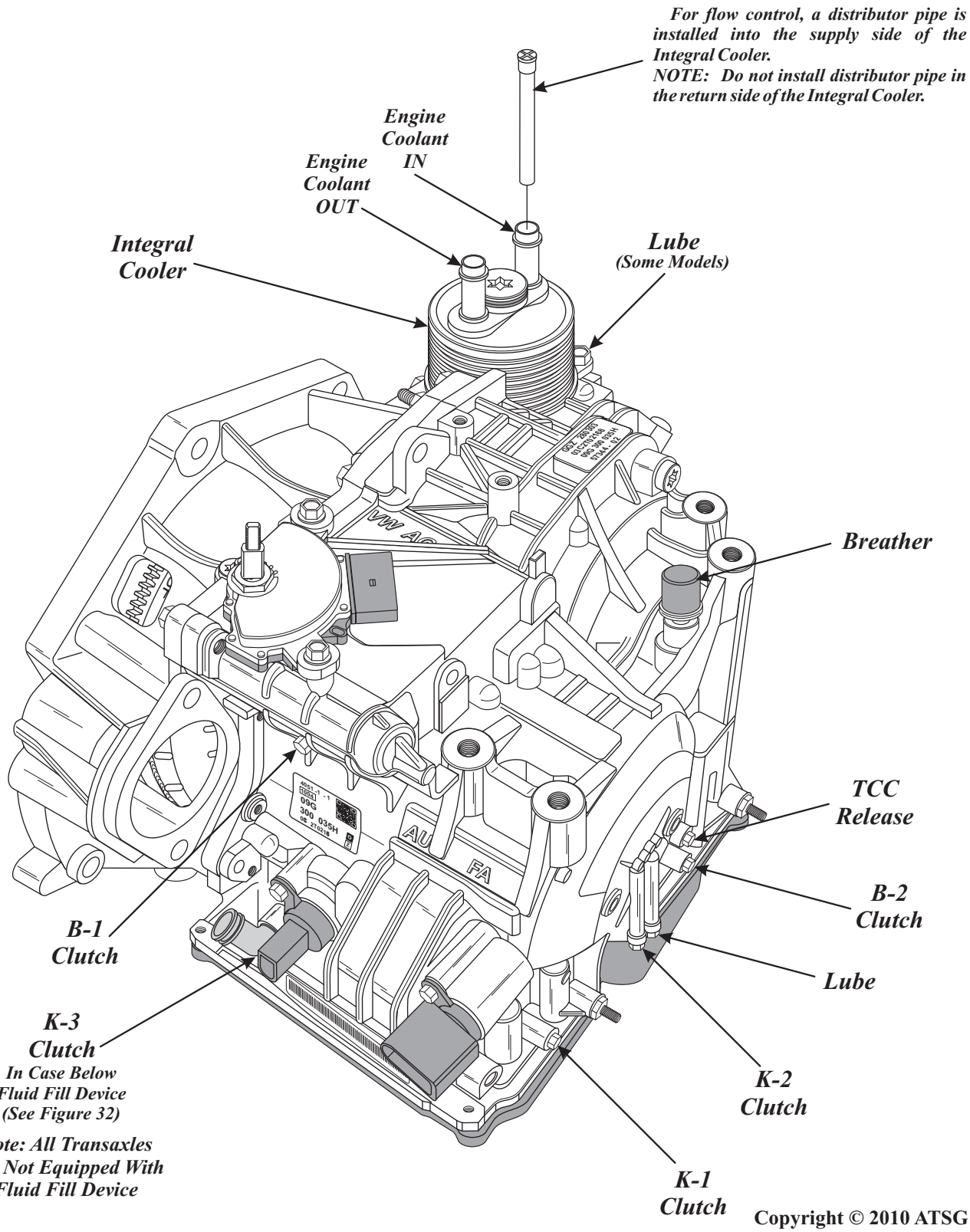

Copyright © 2010 ATSG

Figure 33

WWW.ALL-TRANS.BY

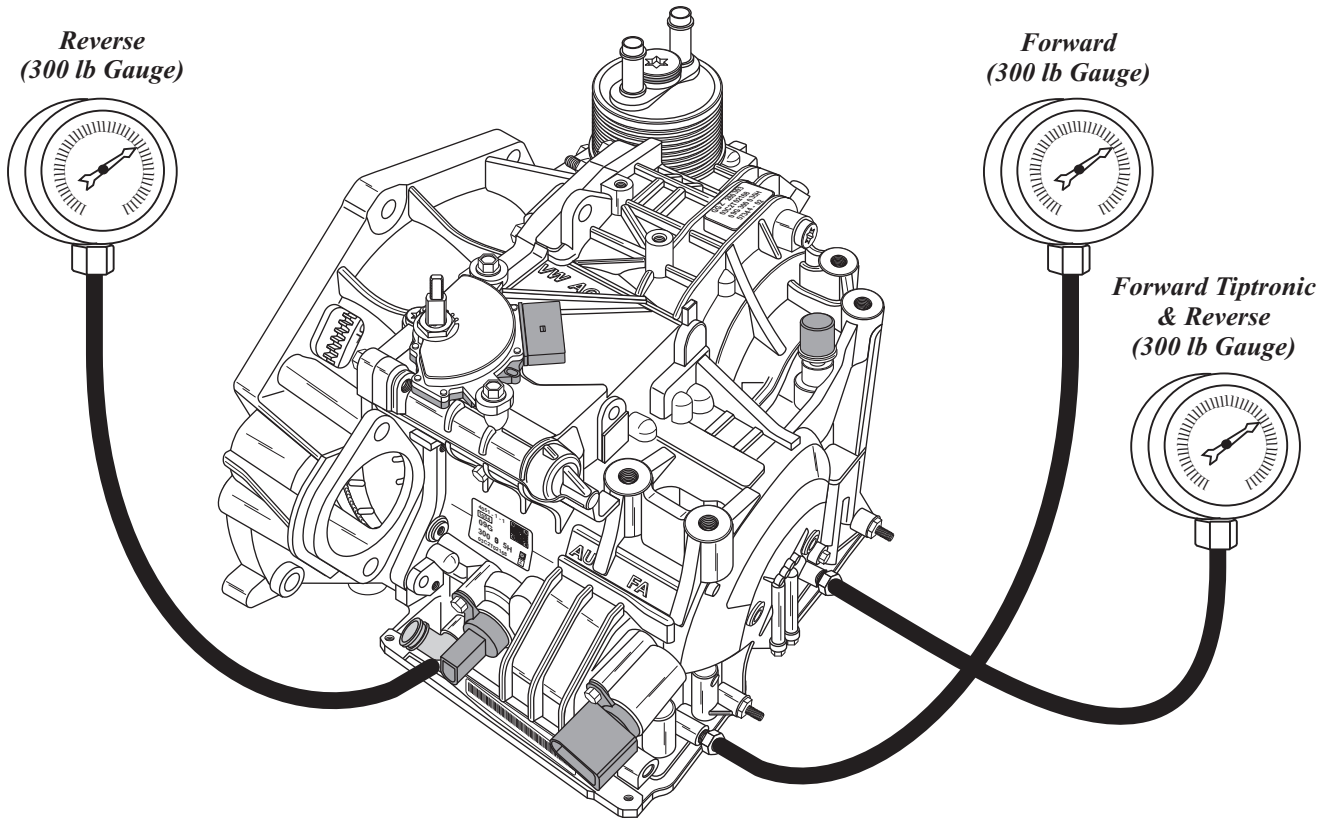

LINE PRESSURE SPECIFICATIONS

"Observed" Pressure Specifications

Many Thanks To; Jesse Zacharias For Providing Us With These Specs To Share

Selector Lever	Taps Required	Specifications in psi K1	K3	B2
"D" Idle	K1 & B2	54-60		0.9
"D" Idle (Tiptronic)	K1 & B2	104-106		23-28
"D" Stall*	K1 & B2	146-160		0.9
"D" Stall (Tiptronic)*	K1 & B2	187-190		53-55
"R" Idle	K3 & B2		80-85	80-85
"R" Stall*	K3 & B2		270-275	270-275
* "D" & "R" Stall, at approx 2300 rpm, the PCM cuts fuel to engine.				
Other "Observed" Pressures				
Lube Pressure 4-8 psi, 8-10 psi in 6th gear				
TCC Release 80-90 psi in Reverse				

Many Thanks To; Jesse Zacharias For Providing Us With These Specs To Share

"Observed" K1 and K2 Pressures, at operating temperature with a new valve body installed.
Initial engagement N to D; K1 pressure at idle is 56-60 psi.
Under acceleration in D; K1 pressure is 75-80 psi.
Before the 1-2 shift in D; K1 pressure raises to 140-150 psi.
When shift is completed; K1 pressure settles at 80-90 psi in 2nd gear.
Before the 2-3 shift in D; K1 pressure raises to 95-100 during 2-3 shift and settles at 70 psi in 3rd.
Before the 3-4 shift in D; K1 pressure raises to 140 psi, K2 pressure still under 4 psi. Then K1 pressure begins to drop and K2 pressure begins to rise with both settling at 85-90 psi in 4th gear.
During 4-5 shift in D; K2 pressure raises to 190-200 psi, K1 pressure raises to 155-160 psi, then K1 drops to 40 psi, (While K2 is 170), then drops gradually to less than 2 psi, and K2 settles at 140 psi in 5th gear.
During 5-6 shift in D; K2 pressure drops to 110-120 in 6th gear.

Copyright © 2010 ATSG

Figure 34

WWW.ALL-TRANS.BY

COOLER INFORMATION

There are two distinctly different style lubrication systems used in TF-60SN (09G/09M) transaxles. As a result, there are 2 different transaxle cases, 2 different converter housings and 2 different valve body to case spacer plates.

Integral Cooler

Some models use an ATF cooler that is mounted on the converter housing and integrated into the engine cooling circuit, as shown in Figure 35. With this arrangement, cooler fluid is sent directly into the cooler and returned to the lube circuit.

Engine coolant is piped to the integral cooler and returned to the cooling system with a constant circulation.

Remote Mounted Cooler

Some models use an ATF cooler that is mounted in a remote location, also shown in Figure 35, and cooler fluid must be sent via traditional cooler lines to the cooler. This requires entry and exit points located in the transaxle case, and their locations are shown in Figure 35.

Caution: If a mis-match of any of these parts occur, lubrication fluid is lost causing immediate failure of the transaxle drive train.

Pay very close attention to the passage ID section that follows, as it provides a way to identify these parts, to avoid disaster.

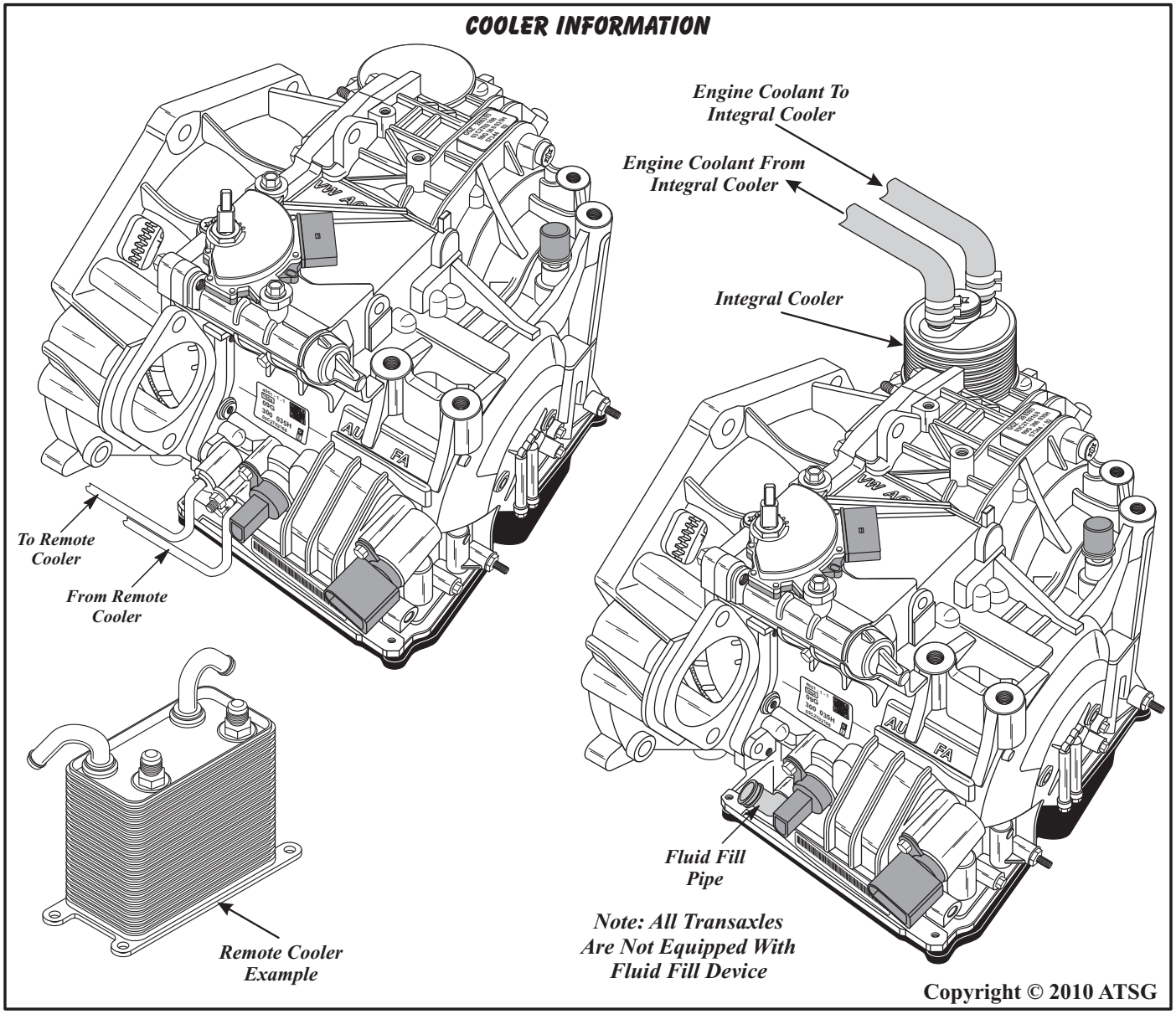

Figure 35

WWW.ALL-TRANS.BY

CASE PASSAGE IDENTIFICATION (VALVE BODY SIDE) WITH "INTEGRAL COOLER"

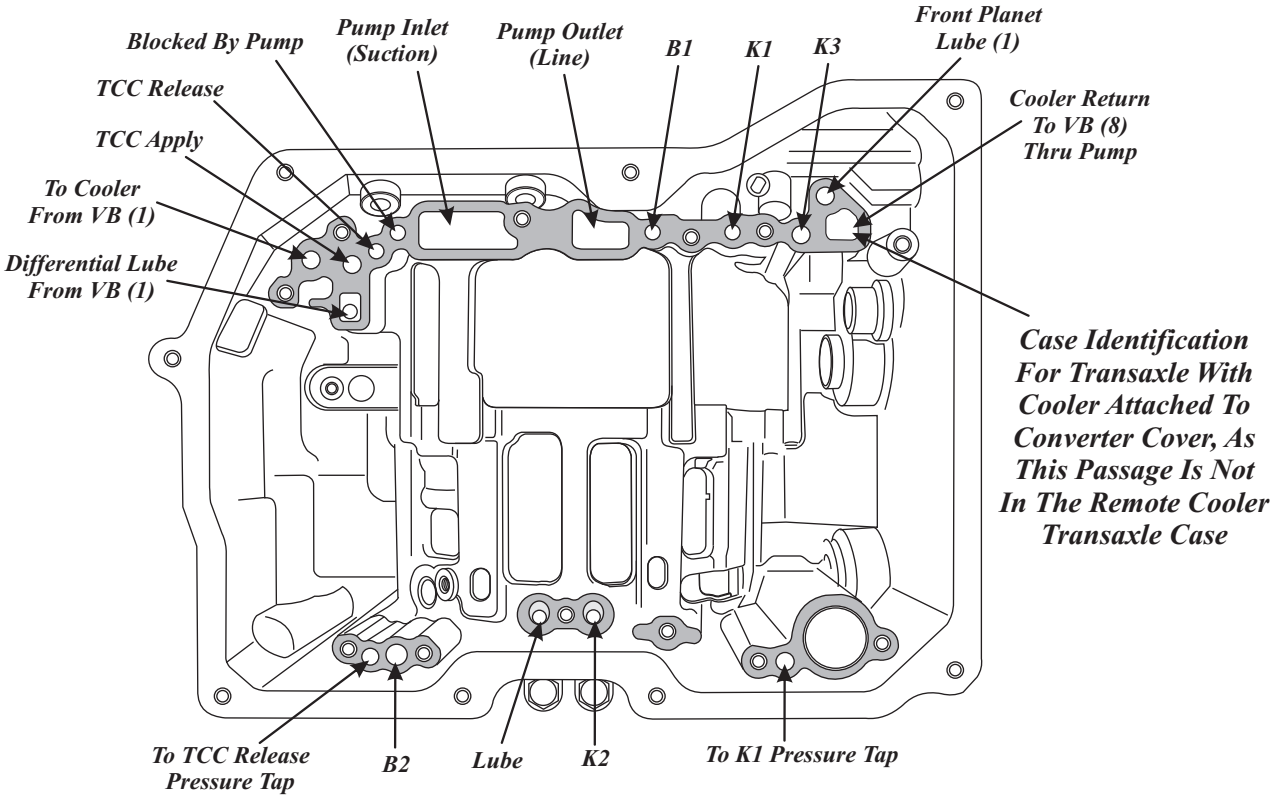

CASE PASSAGE IDENTIFICATION (VALVE BODY SIDE) WITH "REMOTE COOLER"

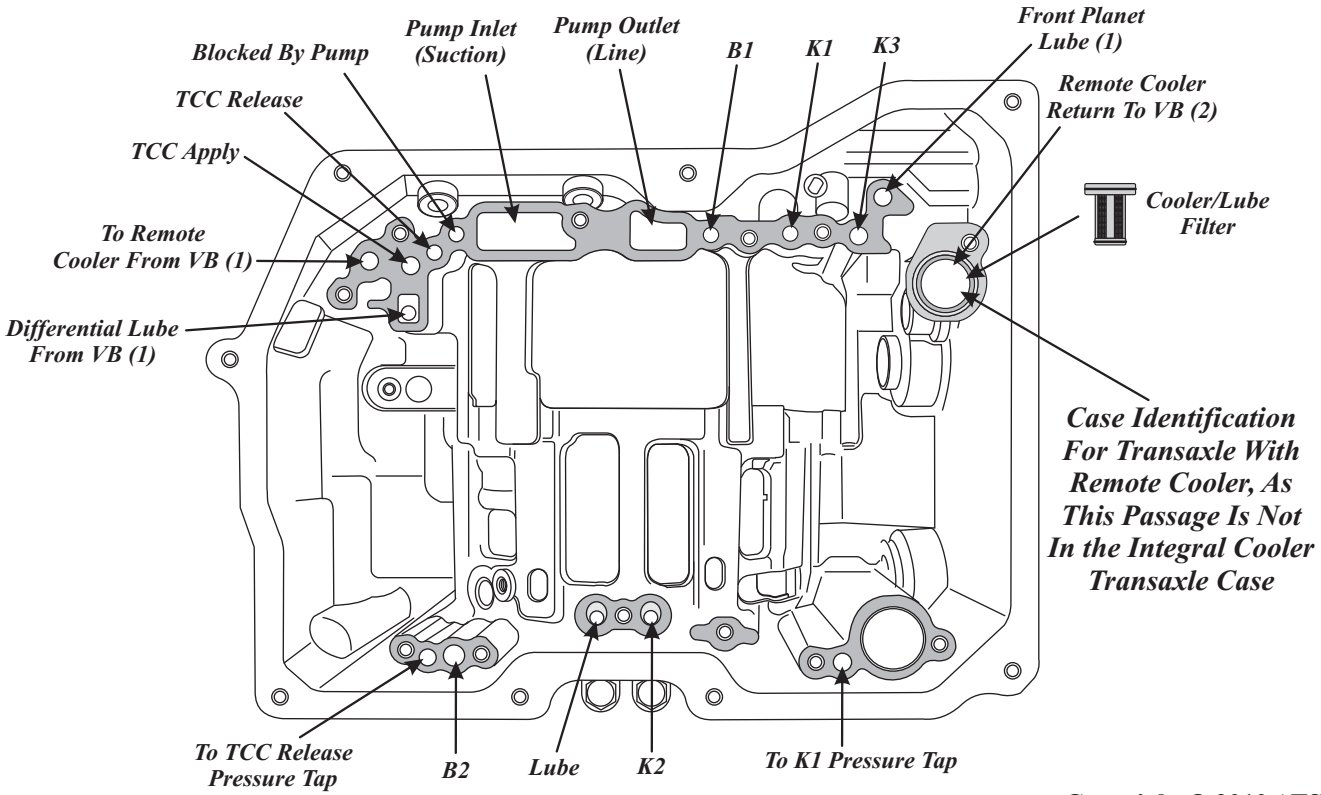

Copyright © 2010 ATSG

Figure 36

WWW.ALL-TRANS.BY

CONVERTER COVER PASSAGE IDENTIFICATION WITH "INTEGRAL COOLER"

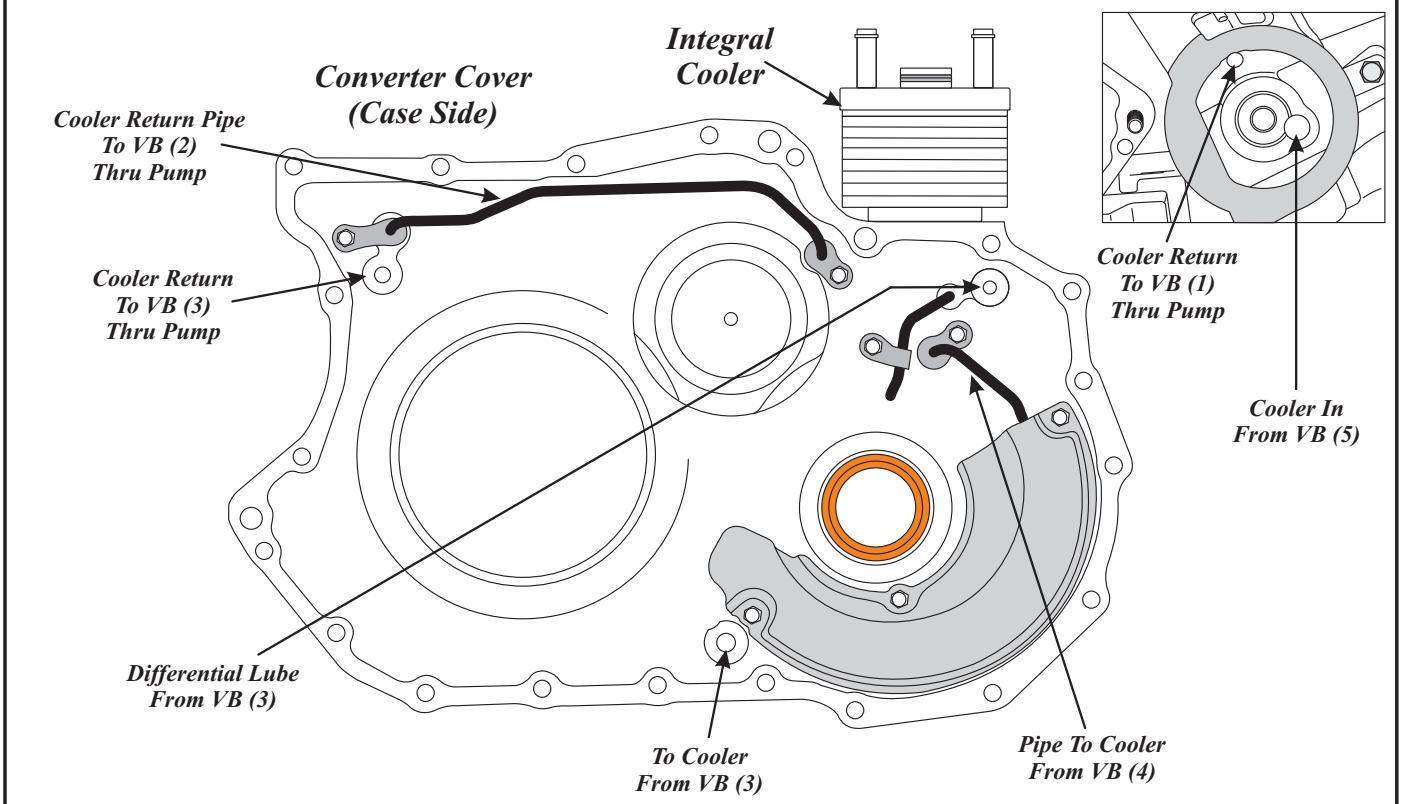

CONVERTER COVER PASSAGE IDENTIFICATION WITH "REMOTE COOLER"

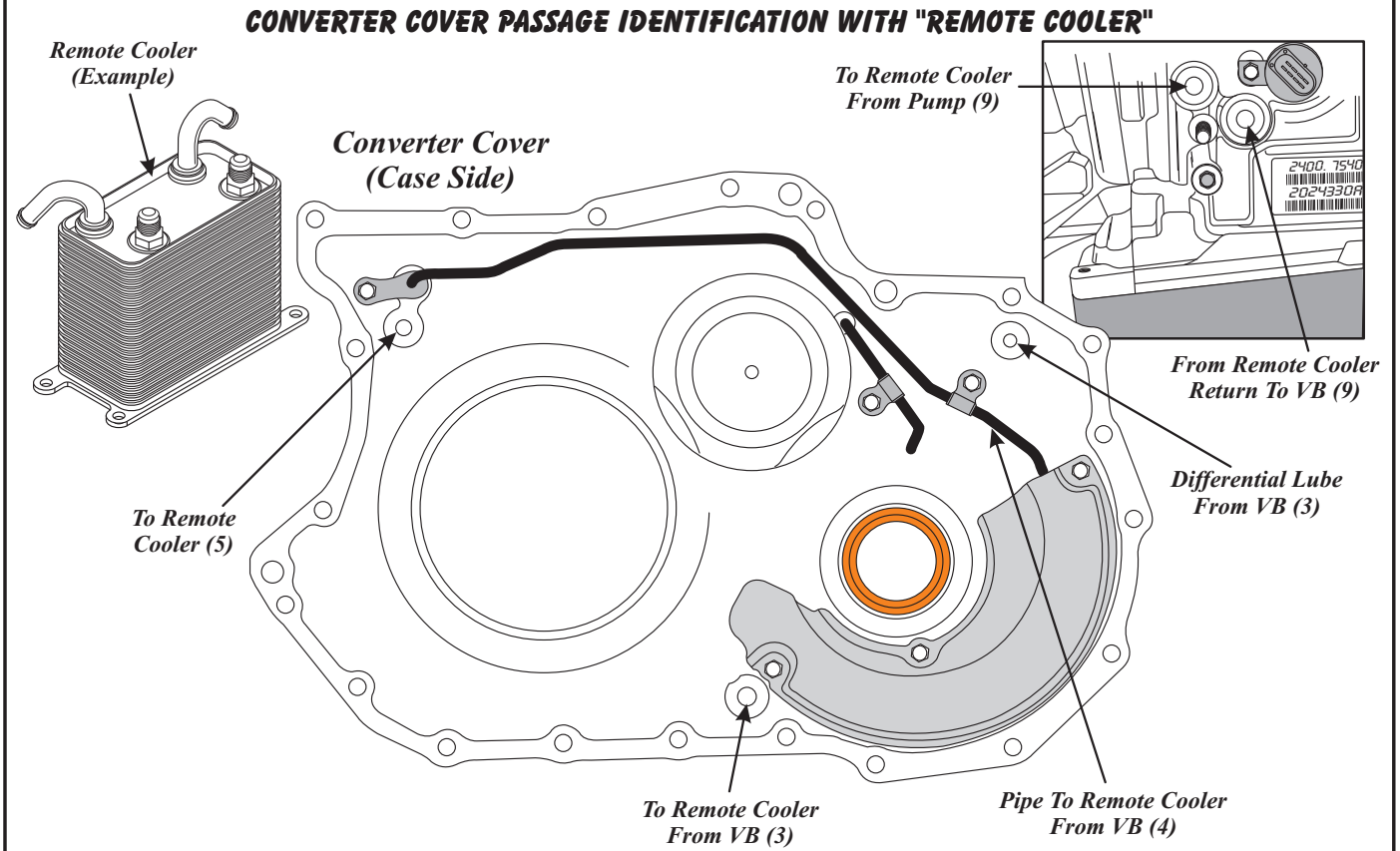

Copyright © 2010 ATSG

Figure 37

WWW.ALL-TRANS.BY

CASE AND VALVE BODY SPACER PLATE IDENTIFICATION WITH "INTEGRAL COOLER"

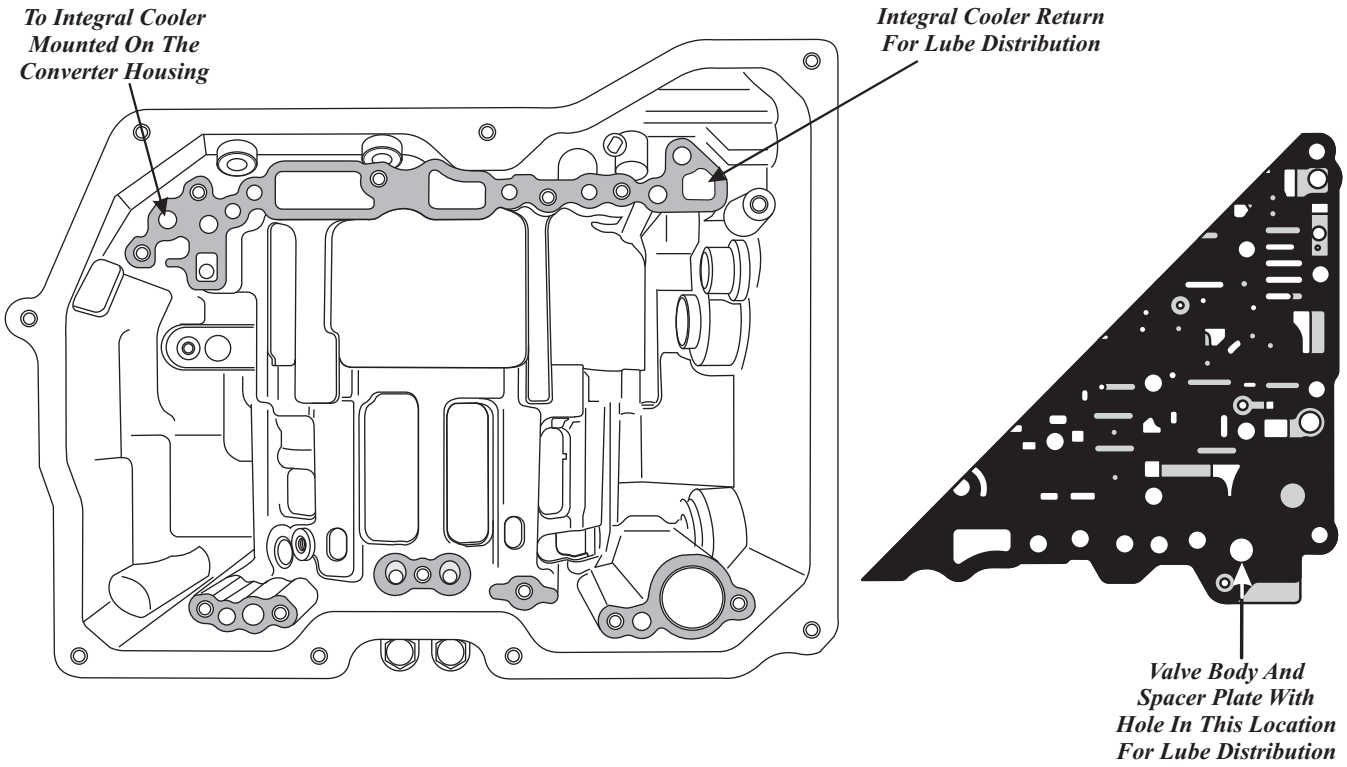

CASE AND VALVE BODY SPACER PLATE IDENTIFICATION WITH "REMOTE COOLER"

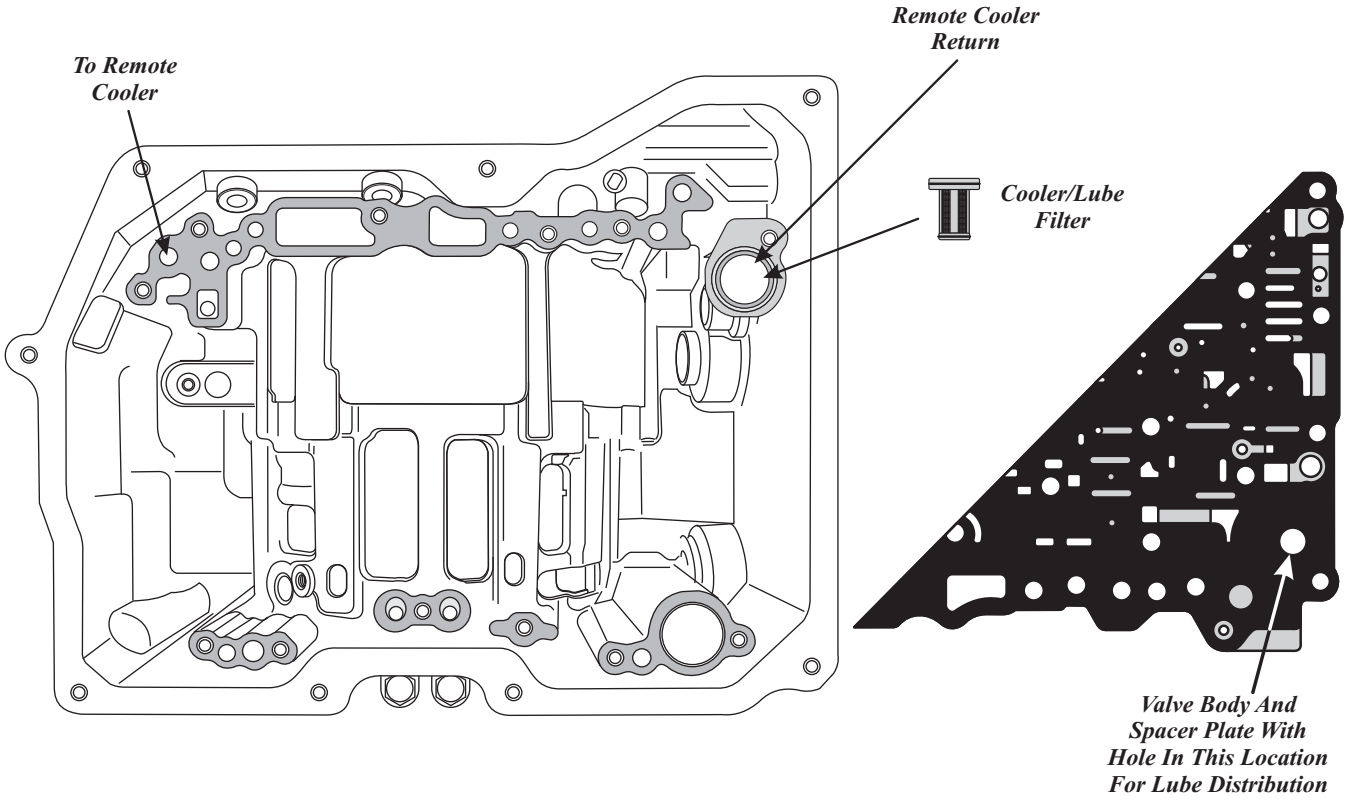

Copyright © 2010 ATSG

Figure 38

WWW.ALL-TRANS.BY

CASE PASSAGE IDENTIFICATION WITH "INTEGRAL COOLER"

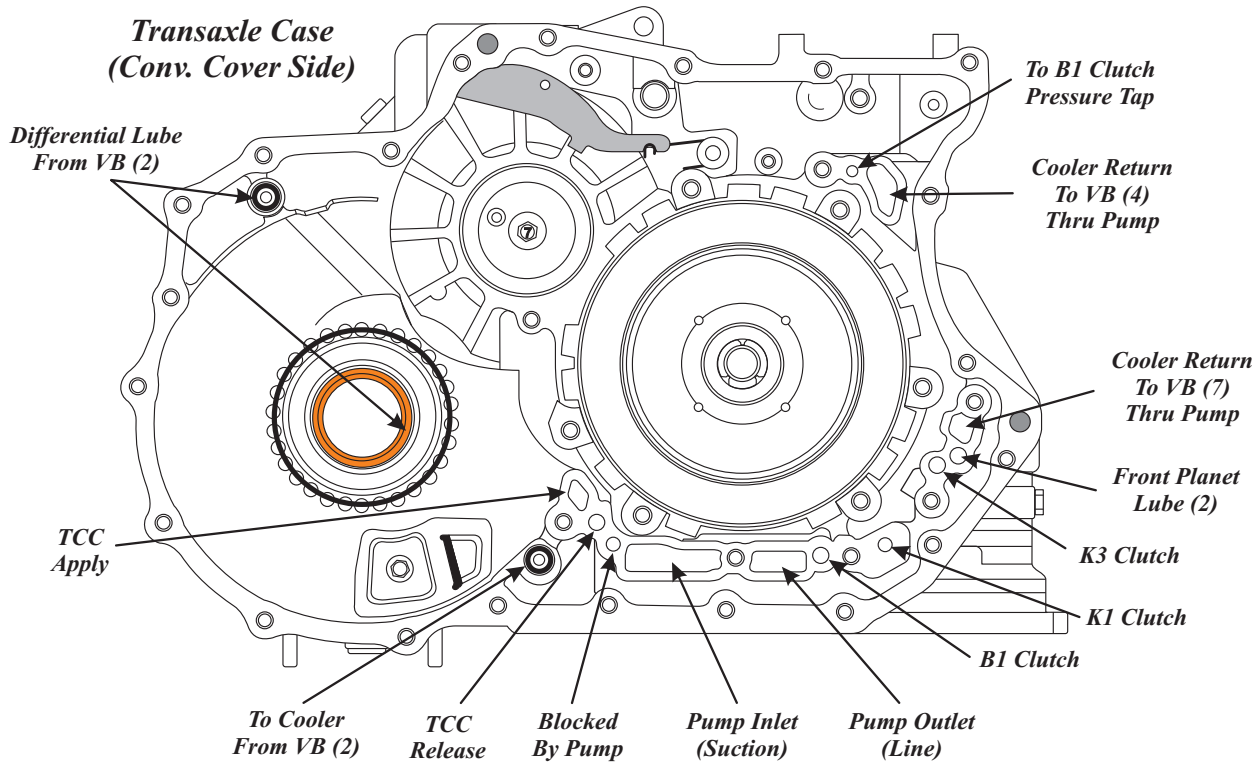

CASE PASSAGE IDENTIFICATION WITH "REMOTE COOLER"

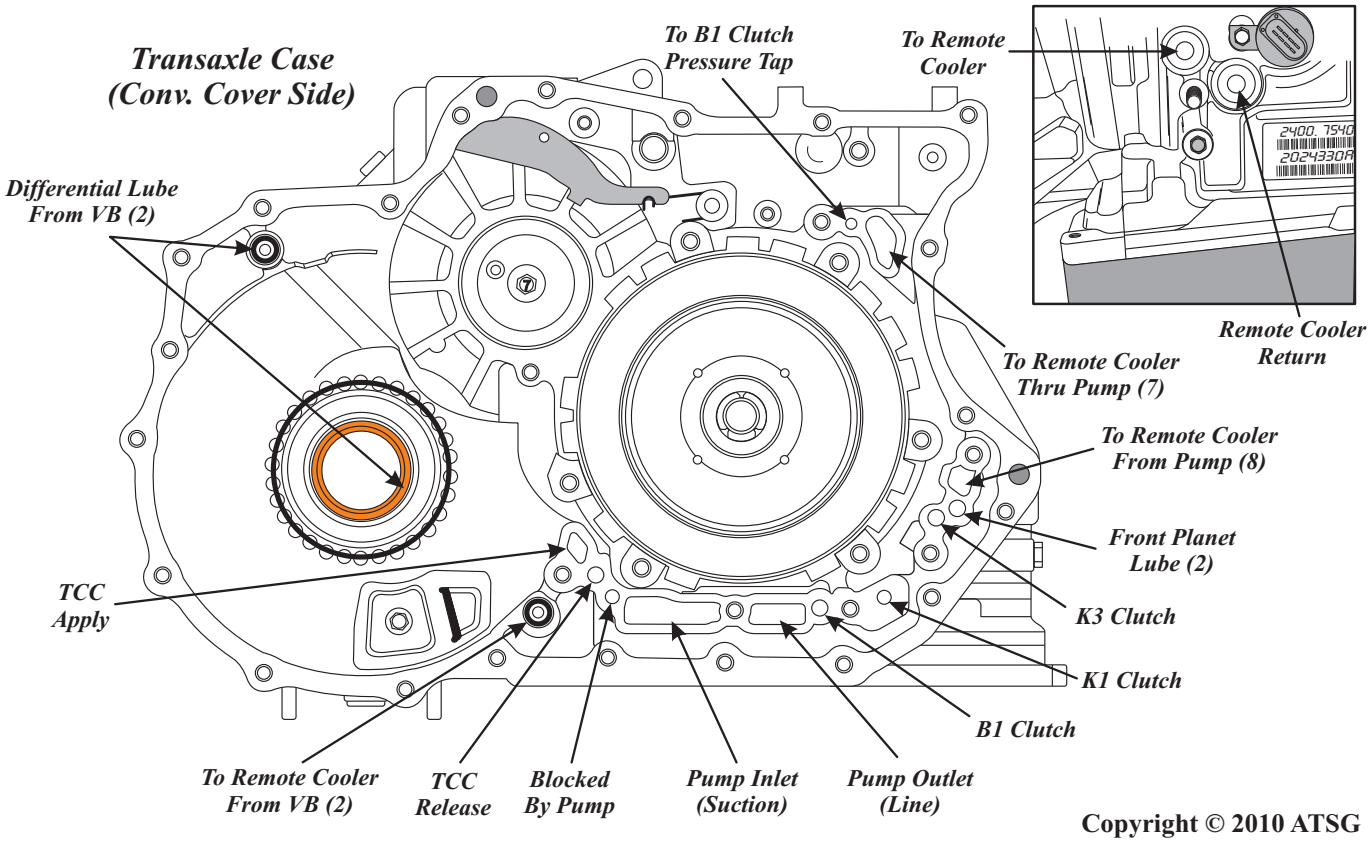

Copyright © 2010 ATSG

Figure 39

WWW.ALL-TRANS.BY

PUMP PASSAGE IDENTIFICATION (CONV. COVER SIDE) WITH "INTEGRAL COOLER"

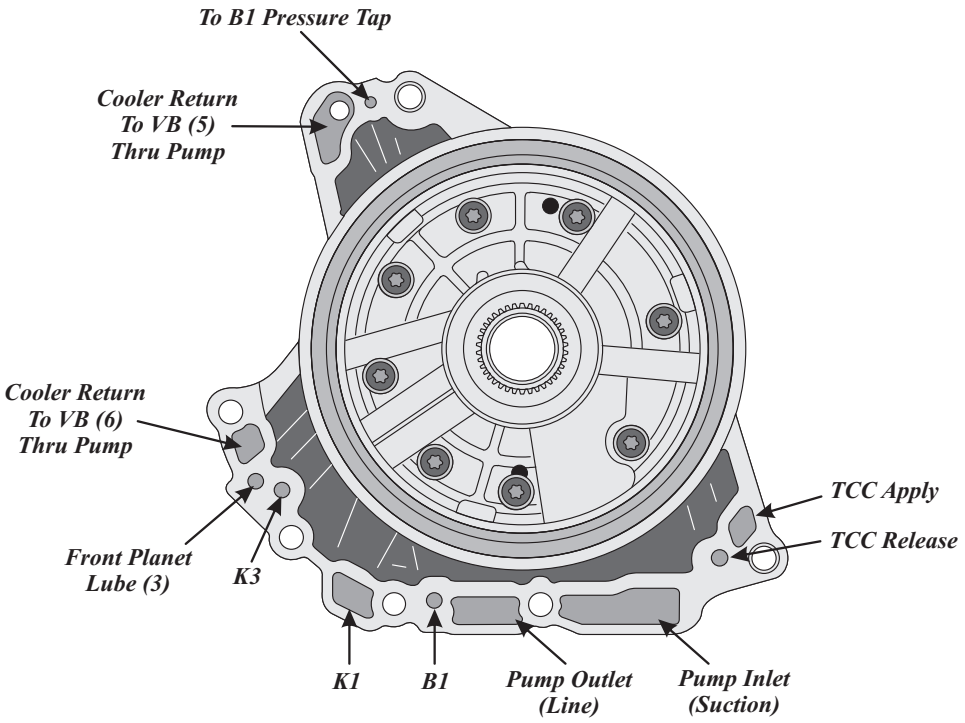

PUMP PASSAGE IDENTIFICATION (CONV. COVER SIDE) WITH "REMOTE COOLER"

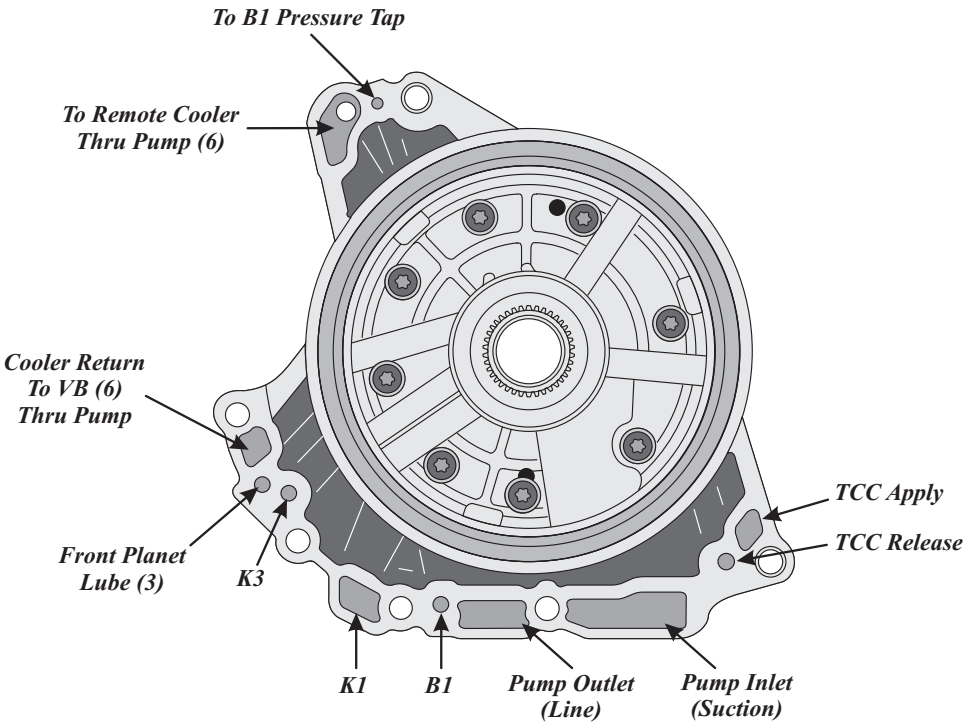

Copyright © 2010 ATSG

Figure 40

WWW.ALL-TRANS.BY

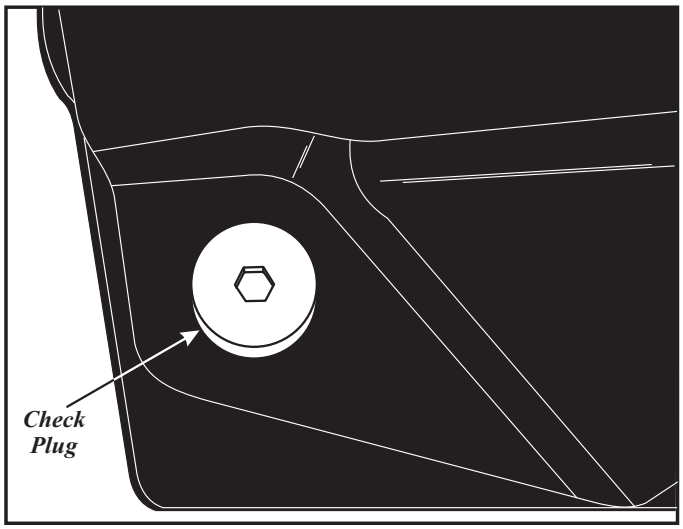

Figure 41

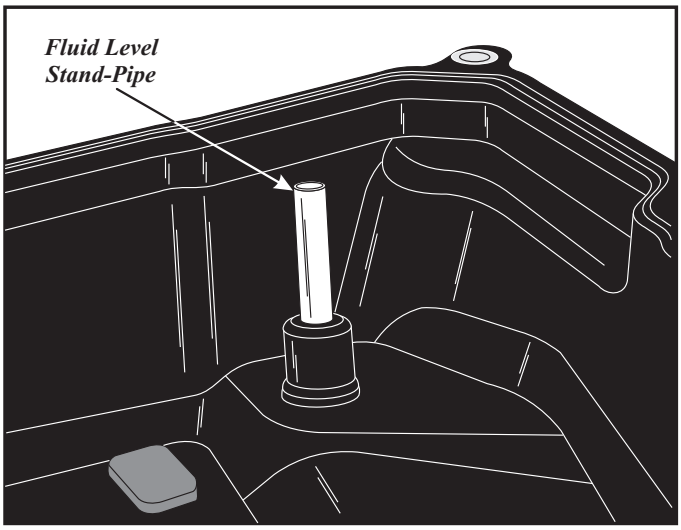

Figure 42

CHECK FLUID LEVEL AND SPECIFICATION

To ***"Check"*** for the correct fluid level, you must remove the check plug, which is located in the corner of the pan, and is removed with a 10 mm allen wrench, as shown in Figure 41.

We have provided you with a cut-away drawing of the bottom oil pan and the check plug so that you will understand how this system works. Notice that the oil pan actually has a "stand-pipe", as shown in Figure 42, that screws into the check plug hole and extends up into the bottom pan, which is our way to establish the proper fluid level in the transaxle. By removing the "Check" plug from the oil pan, the fluid should just trickle over the "stand-pipe" and out through the center of the stand-pipe in the oil pan, as shown in Figure 43.

The "stand-pipe" can be removed with the 10mm allen socket to facilitate draining the transaxle fluid from the bottom pan.

Note: If the "stand-pipe" is removed, it must be installed by hand tightening only with the allen socket and ensure it is completely seated. If not, the fluid level will not be correct and the bottom of the check plug may seat against the stand-pipe instead of seating on check plug sealing washer.

To ***"Fill"*** or ***"Add"*** fluid to the transaxle you must use the fill pipe, usually located by the front case connector, as shown in Figure 35. Some units have a plug in this location and some units have neither, usually the remote cooler models.

If your unit does not have a fill pipe, the only alternative is to use a pump and fill through the check plug and stand pipe. Only the approved type of ATF fluid should be used, as shown below.

Fluid Requirements
VW Part No. G 052 025 A2
BMW Part No. M-83220416600
(Esso JWS 3309) Lifetime Fluid

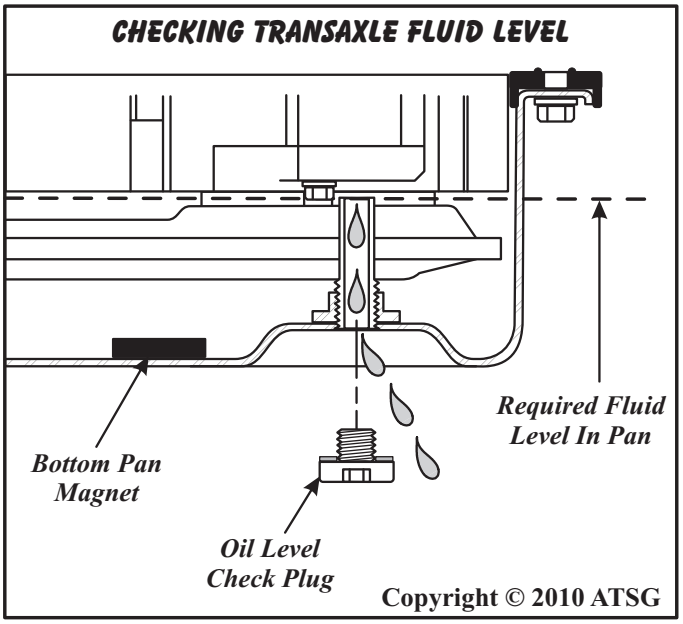

Figure 43

WWW.ALL-TRANS.BY

CAUTION:

There are 3 different lengths of the "stand-pipe" for VW, depending on vehicle and/or model. If the wrong oil pan or "stand-pipe are installed, the result will be a transaxle that is slipping, or a transaxle that is over-filled. Either way, it is a concern. At the time of this printing we have seen only 1 "stand-pipe" for the BMW Mini-Cooper with the 09G. The various lengths, colors and part numbers that were available at time of printing, are listed in Figure 44, and "will not" interchange.

Component	Color	Overall Length	Part Number	Application
Stand-Pipe	White	49.6 mm (1.953")	09G-321-361	VW 09G
Stand-Pipe	Dark Brown	35.7 mm (1.408")	09G-321-361-D	VW 09G
Stand-Pipe	Red			VW 09K
Stand-Pipe	Blue	41.0 mm (1.615")		Mini-Cooper

Copyright © 2010 ATSG

Figure 44

Many Thanks to Meenan Transmission for assisting in ID of the various stand-pipes.

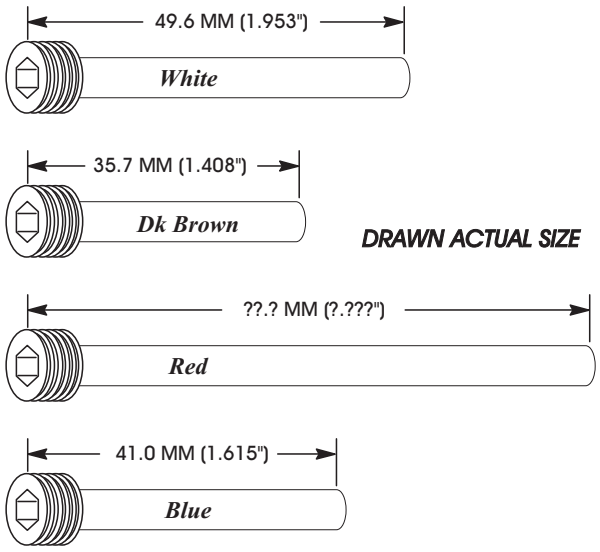

Copyright © 2010 ATSG

Figure 45

Note: If the "stand-pipe" is removed, it must be installed by hand tightening only with the allen socket and ensure it is completely seated. If not, the fluid level will not be correct and the bottom of the check plug may seat against the stand-pipe instead of seating on check plug sealing washer.

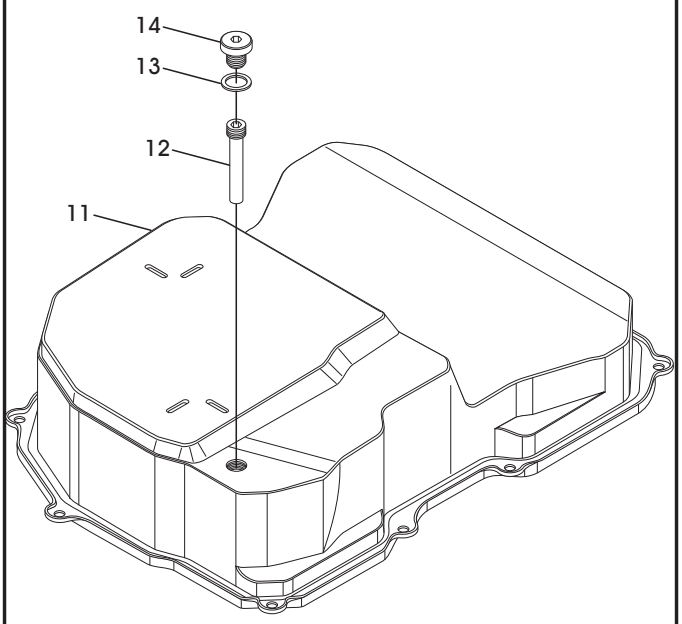

11 BOTTOM OIL PAN (MODEL DEPENDANT).
12 OIL PAN "STAND-PIPE" (MODEL DEPENDANT).
13 OIL LEVEL CHECK PLUG SEALING WASHER.
14 OIL LEVEL CHECK PLUG.

Copyright © 2010 ATSG

Figure 46

WWW.ALL-TRANS.BY

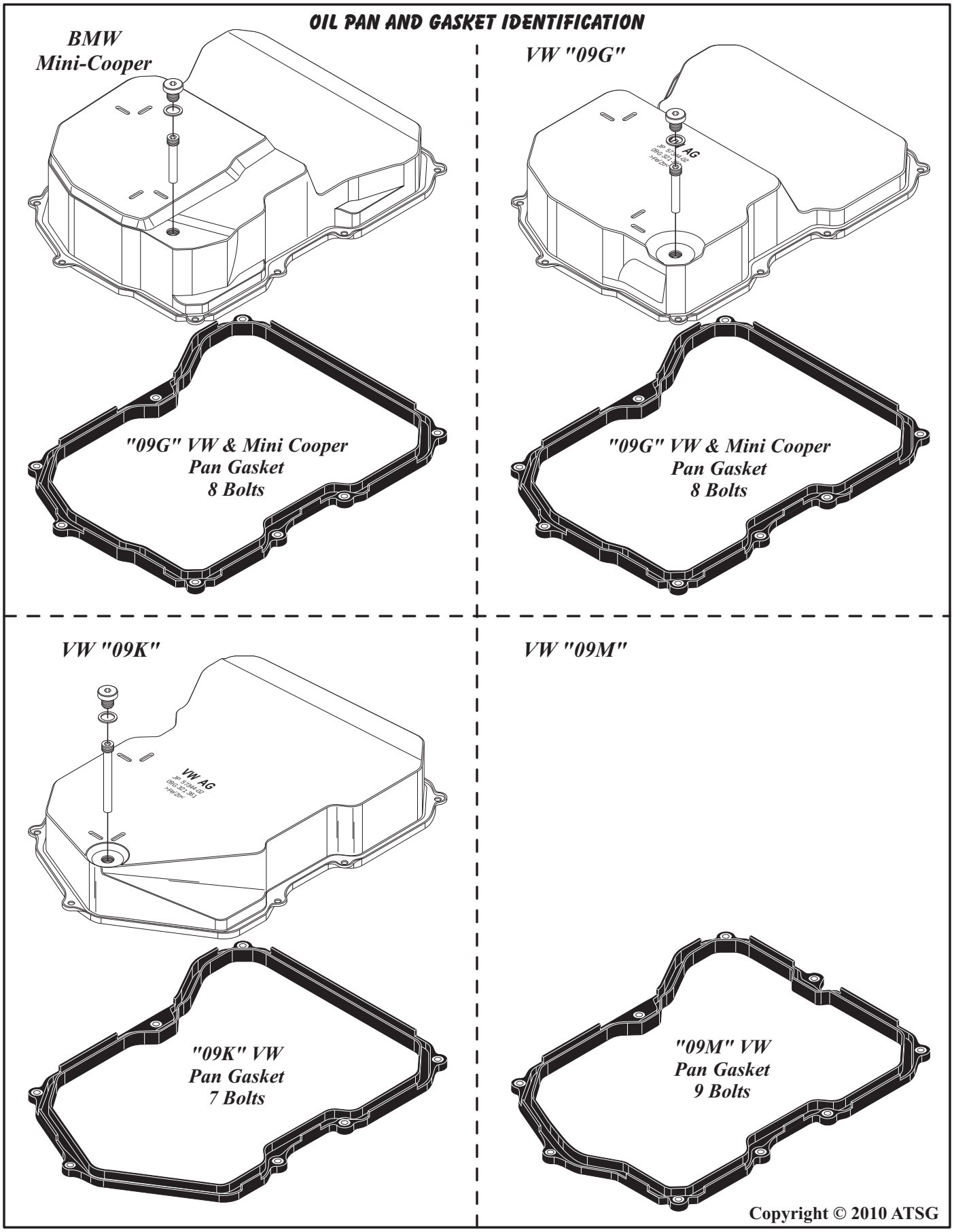

Figure 47

WWW.ALL-TRANS.BY

OIL PAN AND GASKET IDENTIFICATION

The various oil pans and oil pan gaskets are identified for you in Figure 47, on Page 39 and they ***will not*** interchange. Notice that the 8 bolt gasket is used on the 09G and the Mini-Cooper. Gaskets are the same but the pans, filters and stand-pipe are different.

OIL FILTER IDENTIFICATION

The various oil filters are identified for you in Figure 48 and 49 and again, the filters ***will not*** interchange from model to model. You must have the proper filter that matches pan depth.

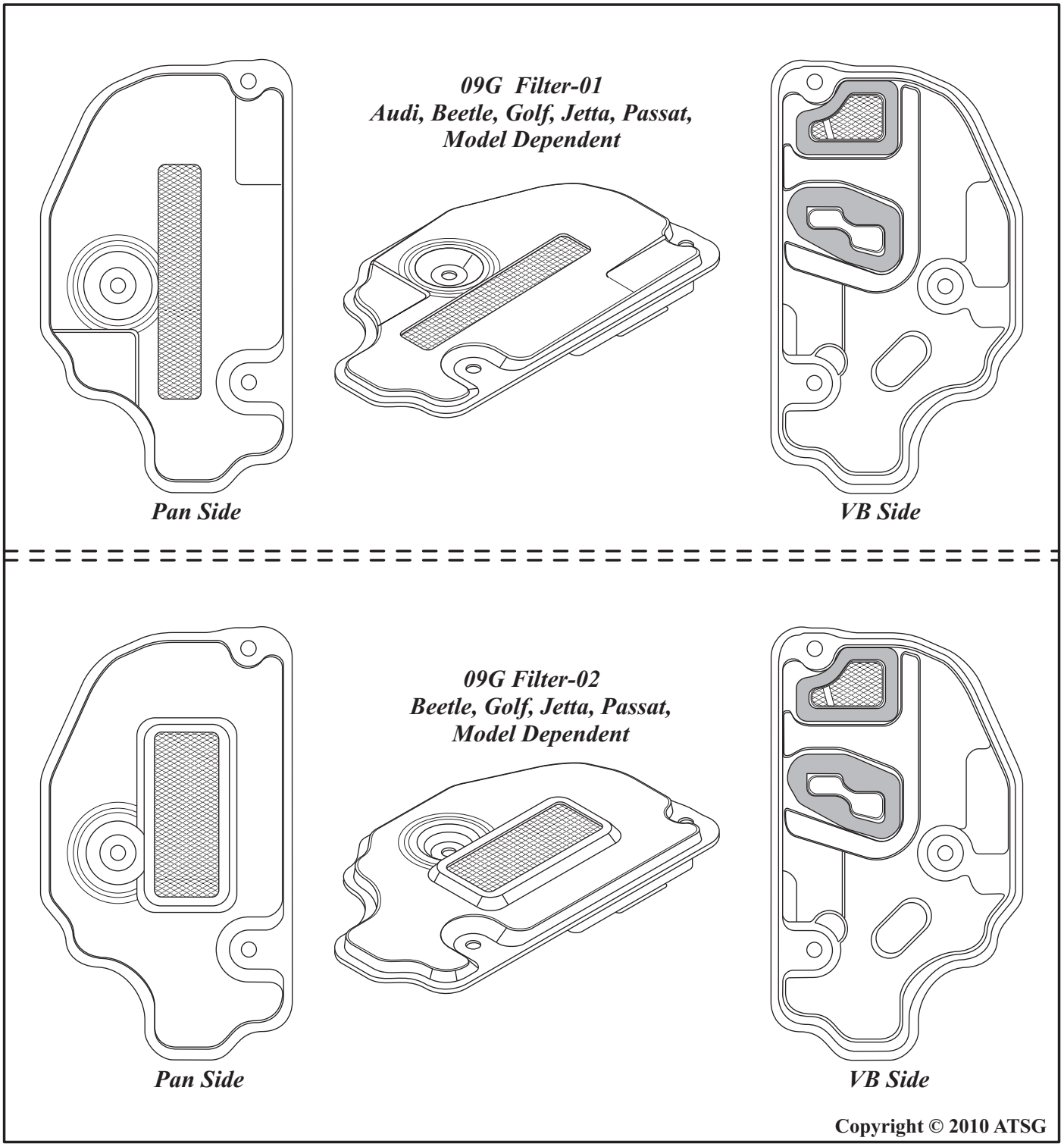

Figure 48

WWW.ALL-TRANS.BY

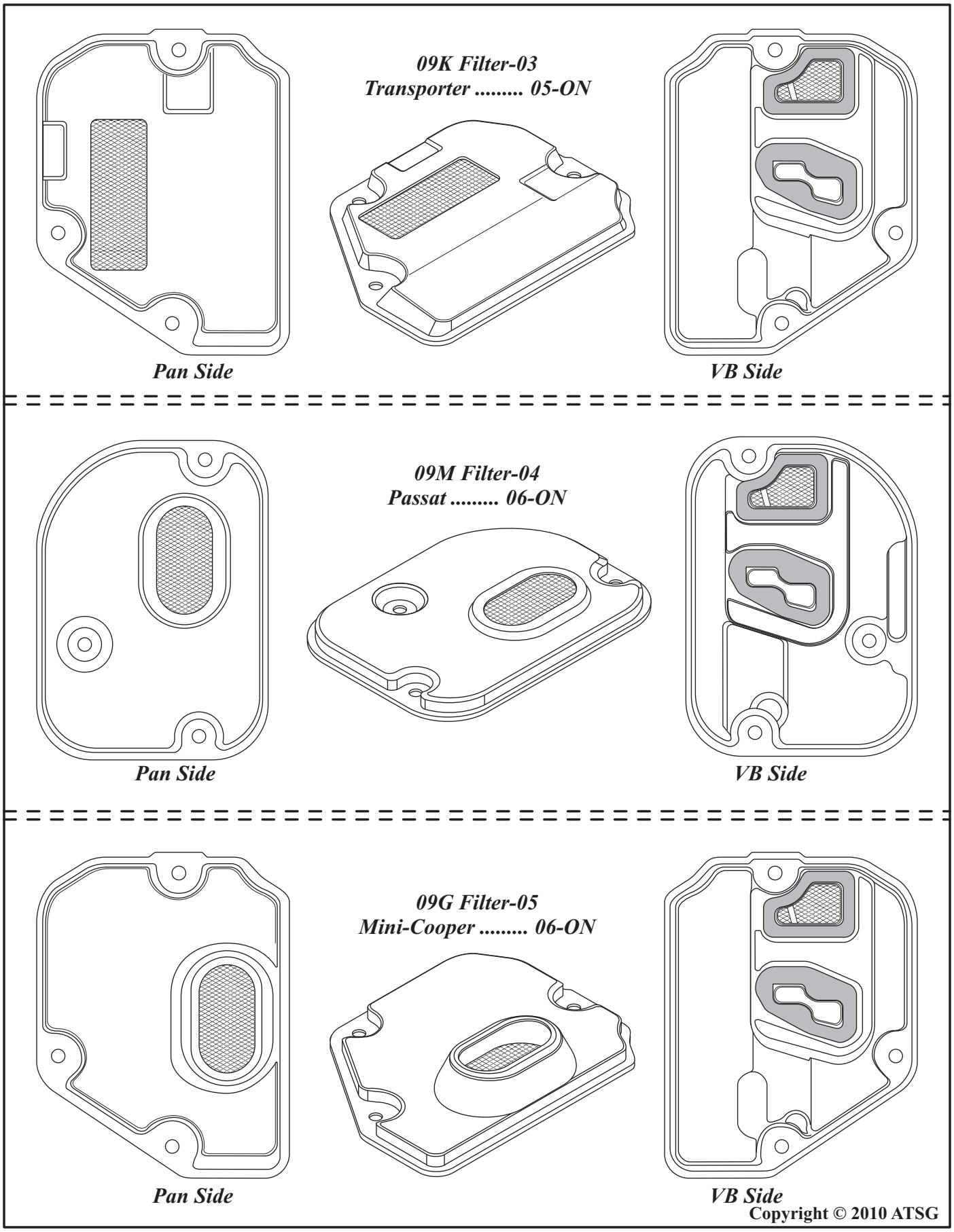

Figure 49

WWW.ALL-TRANS.BY

SAFETY PRECAUTIONS

Service information provided in this manual by ATSG is intended for use by professional, qualified technicians. Attempting repairs or service without the appropriate training, tools and equipment could cause injury to you or others.

The service procedures we recommend and describe in this manual are effective methods of performing service and repair on this unit. Some of the procedures require the use of special tools that are designed for specific purposes.

This manual contains CAUTIONS that you must observe carefully in order to reduce the risk of injury to yourself or others. This manual also contains NOTES that must be carefully followed in order to avoid improper service that may damage the vehicle, tools and/or equipment.

WARNING: There are not any new "hard parts" available from the manufacturer for this unit. Only source will be used aftermarket suppliers.

TRANSAXLE DISASSEMBLY

Note: The illustrations provided in the Assembly and Disassembly section, are of a VW "09G" model with the integral cooler, but procedures are the same on "09K" and "09M" models.

1. The transaxle should be steam cleaned on the outside, to remove any dirt and grease before disassembly begins.
2. This transaxle can be disassembled very easily on a work bench without the benefit of holding fixture for rotation.
3. Remove the torque converter from transaxle, as shown in Figure 50.
   Caution: Use care when removing the torque converter, to avoid personal injury and/or damage to converter, as it is heavy.
4. Record the torque converter code letters, as shown in Figure 50, for future reference.

Continued on Page 43

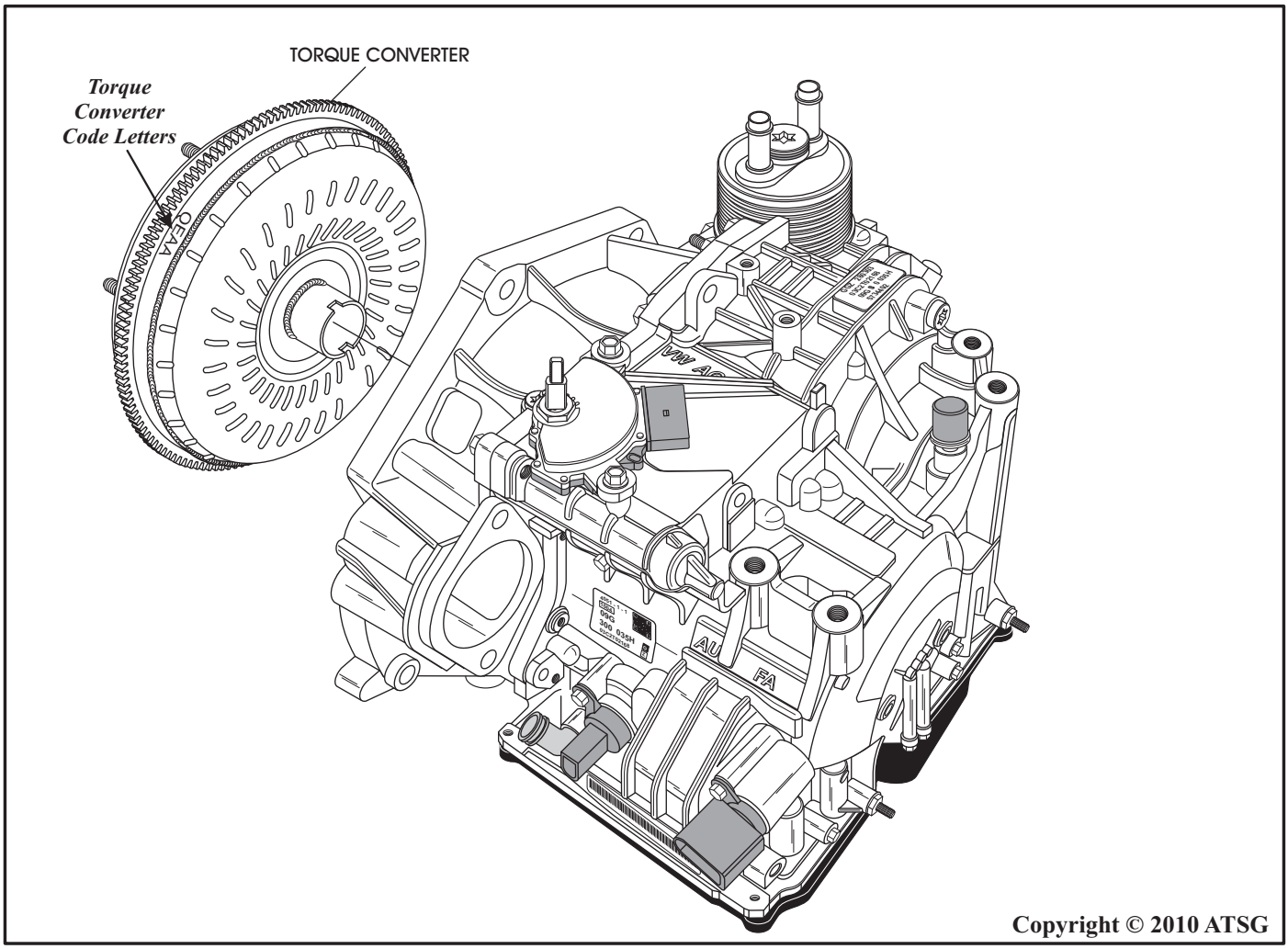

Copyright © 2010 ATSG

Figure 50

WWW.ALL-TRANS.BY

TRANSAXLE DISASSEMBLY (CONT'D)

5. Remove the 2 transaxle range switch retaining bolts and range switch, as shown in Figure 51.
   Note: The contact lever adjusting nut must not be loosened (See Figure 51).
6. Remove the integral cooler (if equipped) and set aside for flushing.
7. Remove and discard the 2 filter seals (4) & (6), as shown in Figure 51.
   Note: Notice that some models are equipped with a flow control distributor pipe in the supply side of cooler, as shown in Figure 51.

Continued on Page 44

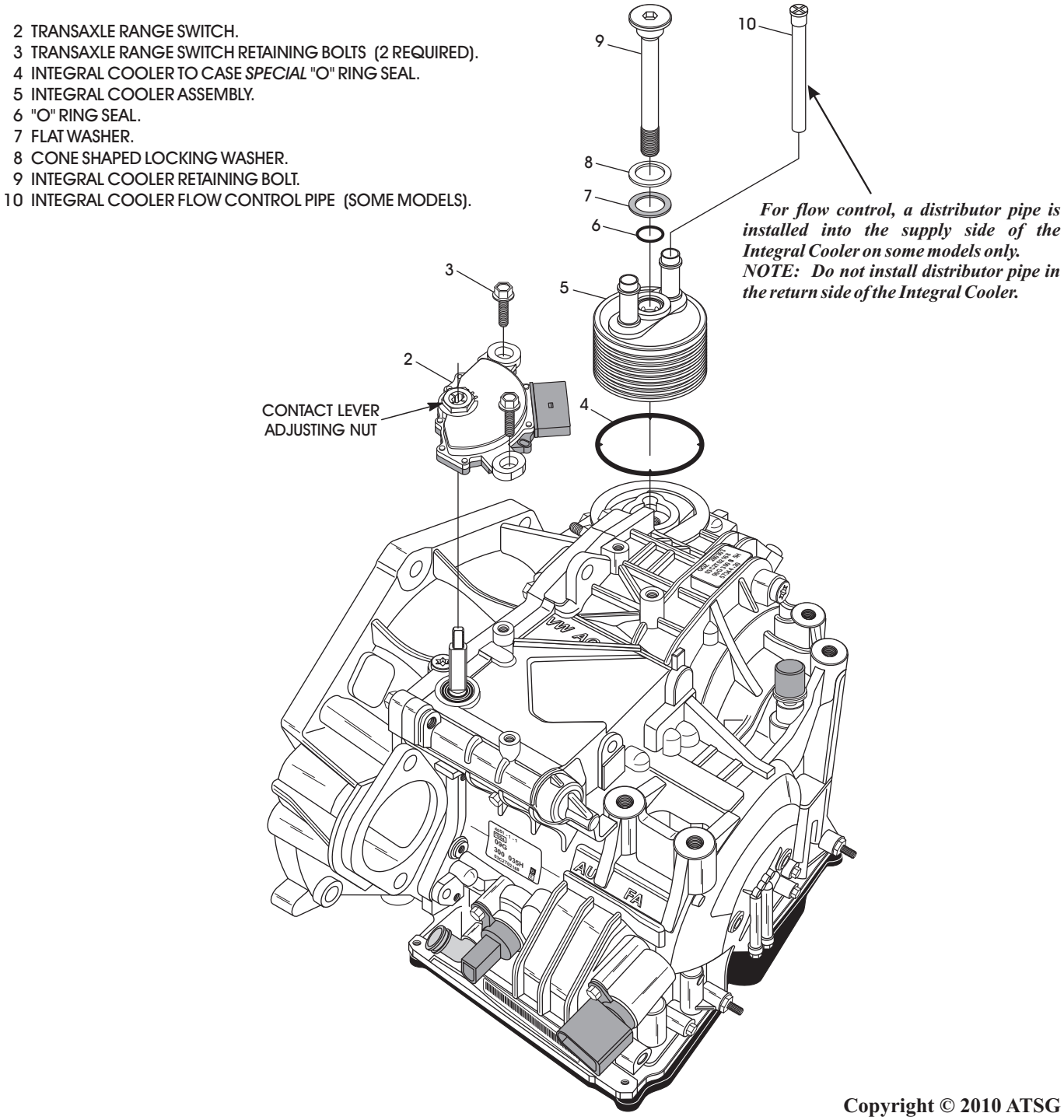

Copyright © 2010 ATSG

Figure 51

WWW.ALL-TRANS.BY

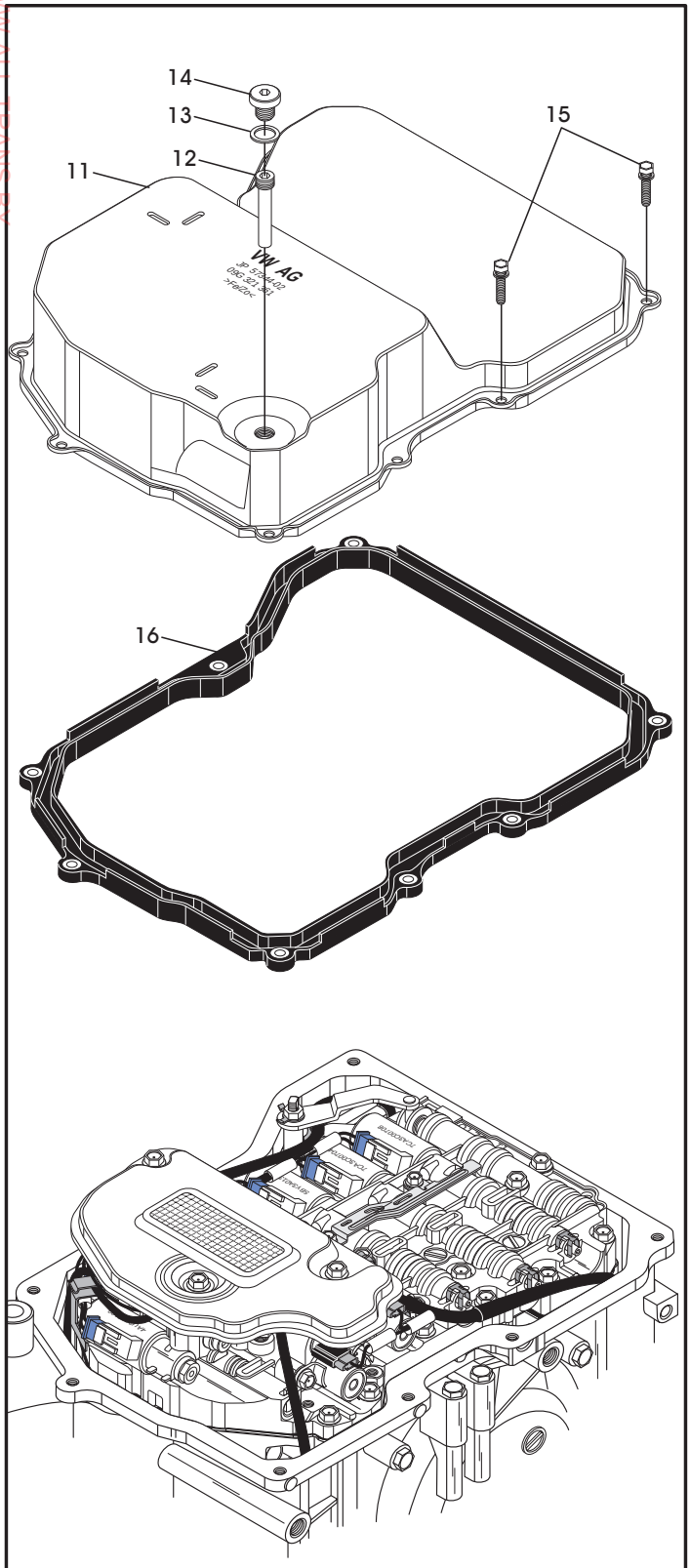

11 BOTTOM OIL PAN (MODEL DEPENDANT).
12 OIL PAN "STAND-PIPE" (MODEL DEPENDANT).
13 OIL LEVEL CHECK PLUG SEALING WASHER.
14 OIL LEVEL CHECK PLUG.
15 OIL PAN BOLTS (8 REQUIRED ON "09G").
16 OIL PAN GASKET.

Copyright © 2010 ATSG

Figure 52

TRANSAXLE DISASSEMBLY (CONT'D)

8. Remove the bottom oil pan bolts (8 on "09G") and remove the bottom oil pan, as shown in Figure 52.
9. Remove and discard the bottom oil pan gasket, as shown in Figure 52.
10. Remove the three oil filter retaing bolts and remove the oil filter, as shown in Figure 53.
11. If the filter is to be re-used, remove and discard the filter gaskets as shown in Figure 54, as the filter gaskets are included in Transtec® kit. ***Note: Replacing the filter is recommended on every unit and the gaskets come with the new filter, already glued in place. If the filter is to be replaced, discard the entire filter.***

Continued on Page 36

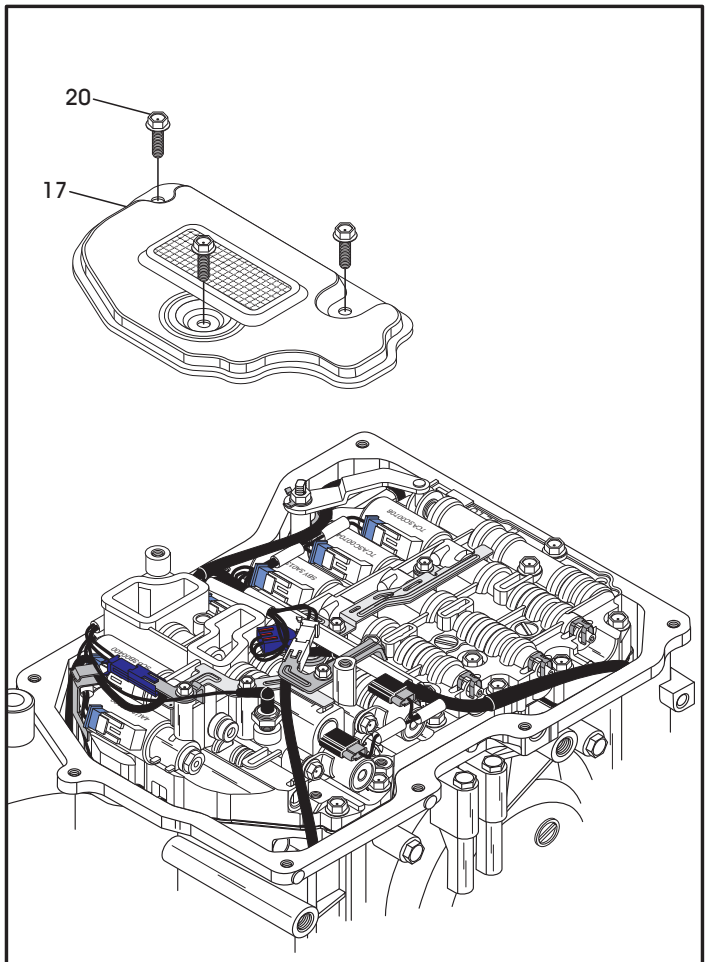

17 OIL FILTER (MODEL DEPENDANT).
20 OIL FILTER RETAINING BOLTS (3 REQUIRED).

Copyright © 2010 ATSG

Figure 53

WWW.ALL-TRANS.BY

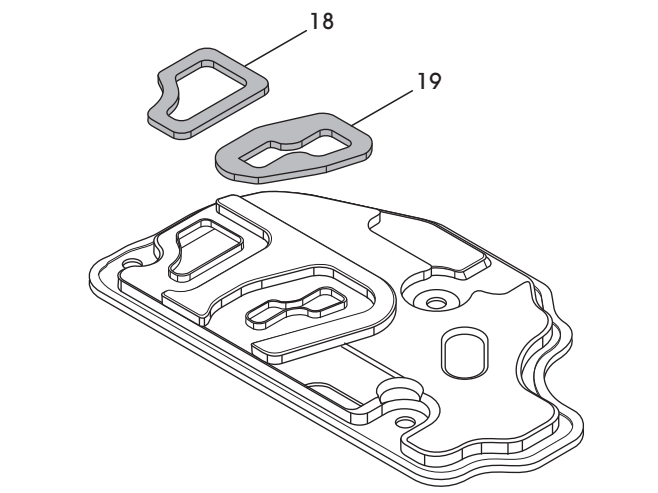

18 OIL FILTER GASKET.
19 OIL FILTER GASKET.

Copyright © 2010 ATSG

Figure 54

TRANSAXLE DISASSEMBLY (CONT'D)

CAUTION, CAUTION, CAUTION, CAUTION

Before proceeding with the disassembly process it is "Imperative" that you now log the color of the wires going to each and every solenoid to use as a reference for final assembly. The wire colors are different between models and year of manufacture.

12. Remove the internal manual shift lever retaining nut, using pliers or vice-grip to hold shift lever, as shown in Figure 55.
    Note: There are two different designs of the manual lever nut, as shown in Figure 56, one of which has a locking tab washer.
13. Remove the internal manual shift lever from the manual shaft, as shown in Figure 56.

Continued on Page 46

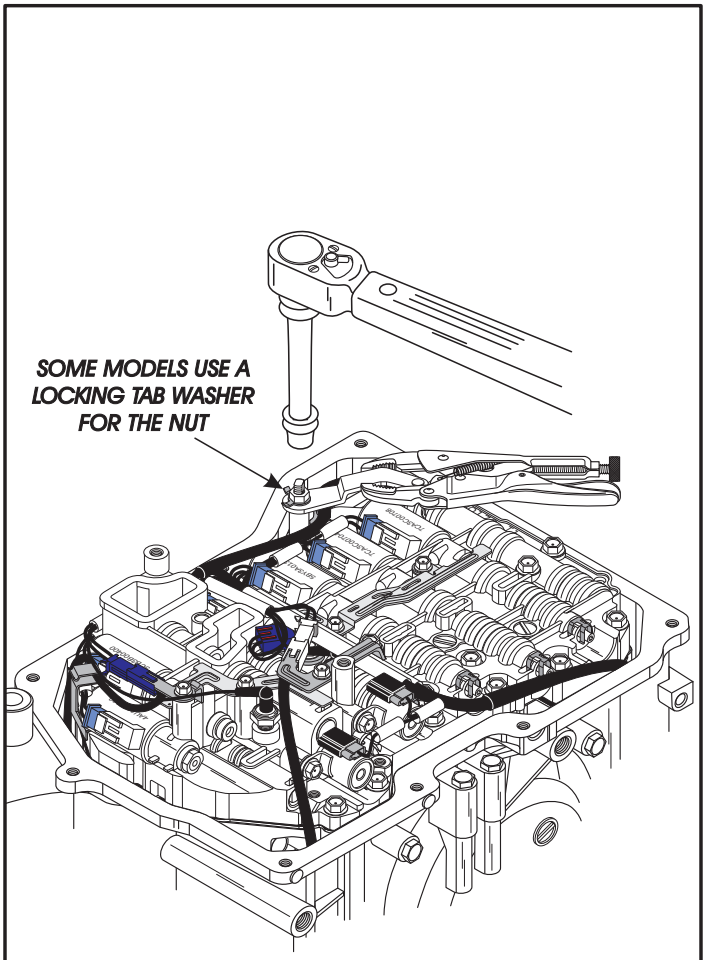

Copyright © 2010 ATSG

Figure 55

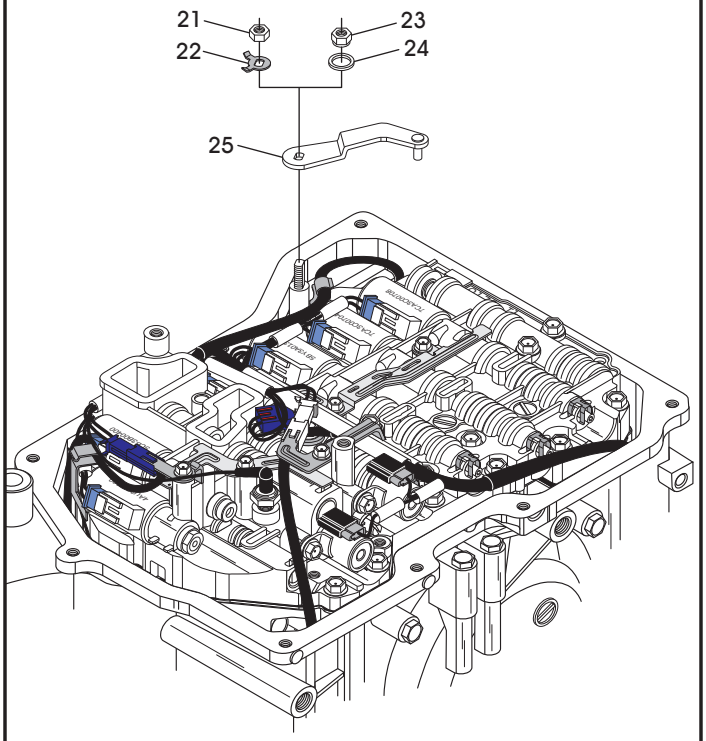

21 MANUAL SHAFT LEVER RETAINING NUT (SOME MODELS).
22 RETAINING NUT LOCKING TAB WASHER (SOME MODELS).
23 MANUAL SHAFT LEVER NUT WITH SHOULDER (SOME MODELS).
24 MANUAL SHAFT LEVER CENTERING WASHER (SOME MODELS).
25 INTERNAL MANUAL SHAFT LEVER.

Copyright © 2010 ATSG

Figure 56

WWW.ALL-TRANS.BY

TRANSAXLE DISASSEMBLY (CONT'D)

14. Remove the bolts retaining the blue connector output speed sensor bracket and white connector input speed sensor brackets (See Figure 57).
15. Remove the bolt retaining the TFT sensor and the retaining bracket, as shown in Figure 57.
16. Remove the connectors from both speed sensors, both pressure switches (if used), as shown in Figure 57.
17. Lay the sensor and switch harness from 8 way connector over the pan rail (See Figure 57).
18. Lay the output speed sensor harness over the pan rail, as shown in Figure 57.
19. Lay the input speed sensor harness over the pan rail, as shown in Figure 57.
20. Remove all eight solenoid connectors from their respective solenoids (See Figure 58).
    Caution: Now is another chance to log color of wires going to each and every solenoid before disconnecting them.
21. Lay the solenoid wire harness from the 14 way connector over the pan rail (See Figure 58).

Continued on Page 47

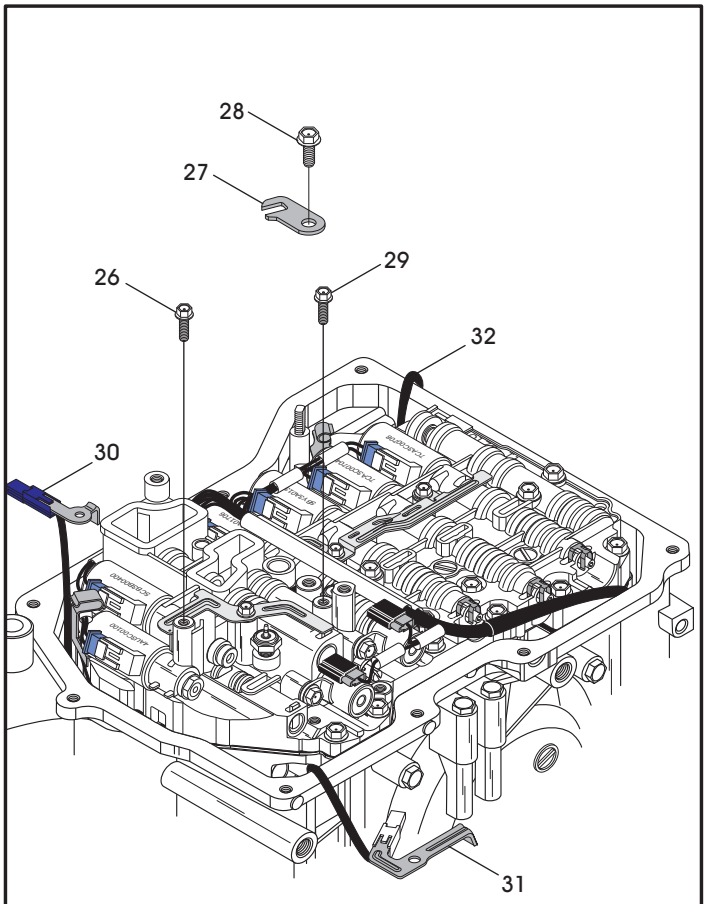

26 OUTPUT SPEED SENSOR BRACKET BOLT (11 MM LENGTH).
27 TFT SENSOR RETAINING BRACKET.
28 TFT SENSOR RETAINING BRACKET BOLT (11 MM LENGTH).
29 INPUT SPEED SENSOR BRACKET BOLT (11 MM LENGTH).
30 OUTPUT SPEED SENSOR HARNESS OVER PAN RAIL.
31 INPUT SPEED SENSOR HARNESS OVER PAN RAIL.
32 SENSOR AND SWITCH HARNESS OVER PAN RAIL.

Copyright © 2010 ATSG

Figure 57

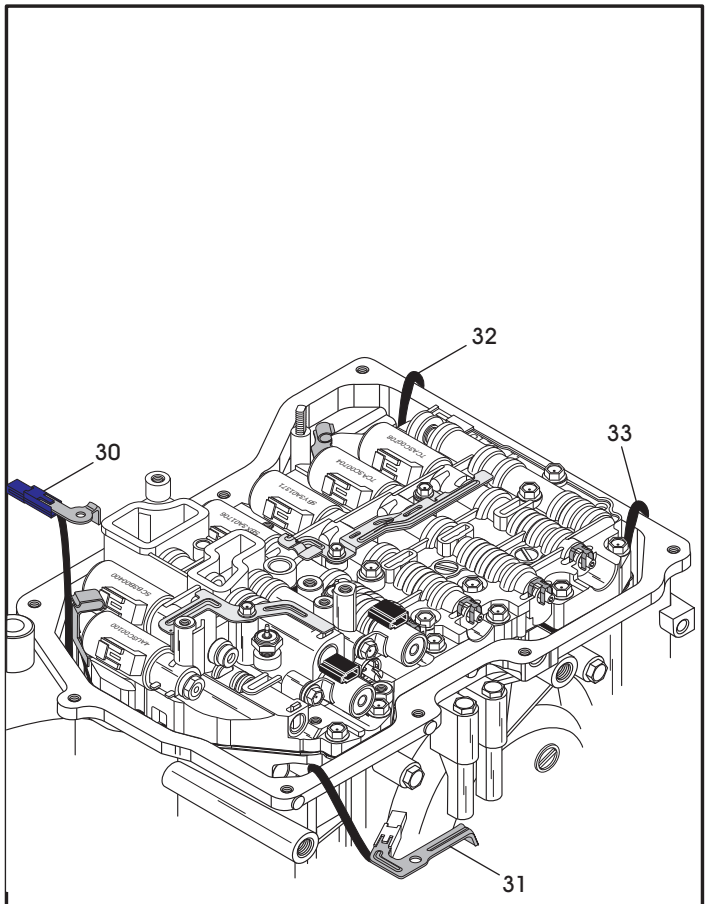

30 OUTPUT SPEED SENSOR HARNESS OVER PAN RAIL.
31 INPUT SPEED SENSOR HARNESS OVER PAN RAIL.
32 SENSOR AND SWITCH HARNESS OVER PAN RAIL.
33 14 WAY SOLENOID HARNESS OVER PAN RAIL.

Copyright © 2010 ATSG

Figure 58

WWW.ALL-TRANS.BY

TRANSAXLE DISASSEMBLY (CONT'D)

22. Remove only the 12 valve body to case bolts that are identified in Figure 59.
    Note: Valve body retaining bolts may vary in length from model to model.
23. Remove the wire harness retaining brackets, as shown in Figure 60.
    Note: Wire harness retaining brackets will vary from model to model.
24. Remove the valve body assembly, as shown in Figure 60.
25. Set valve body assembly aside for component rebuild section.

Continued on Page 48

VALVE BODY TO CASE BOLTS

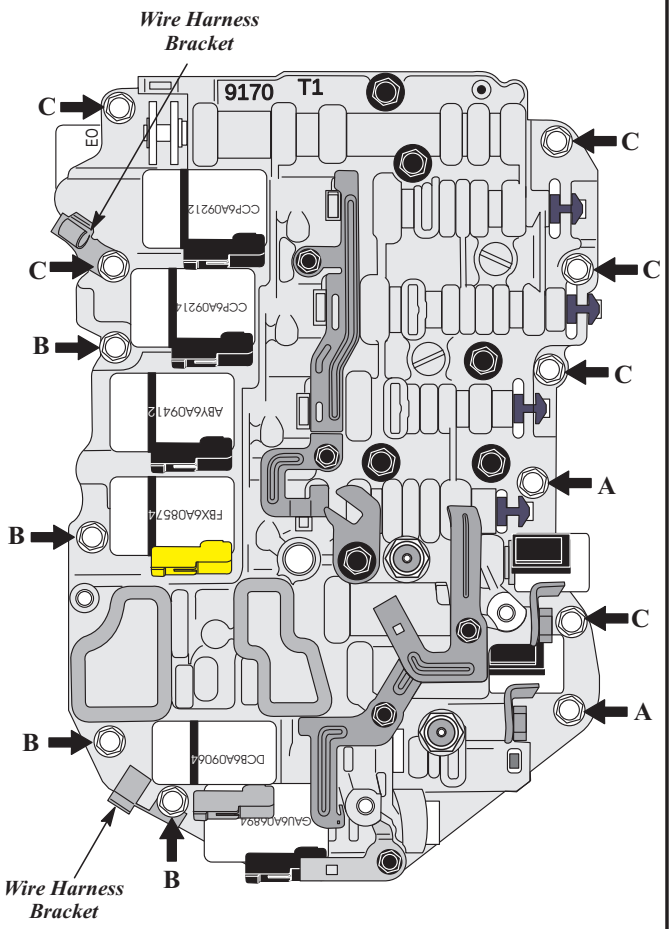

A = 16 mm Length
B = 28 mm Length
C = 21 mm Length

Copyright © 2010 ATSG

Figure 59

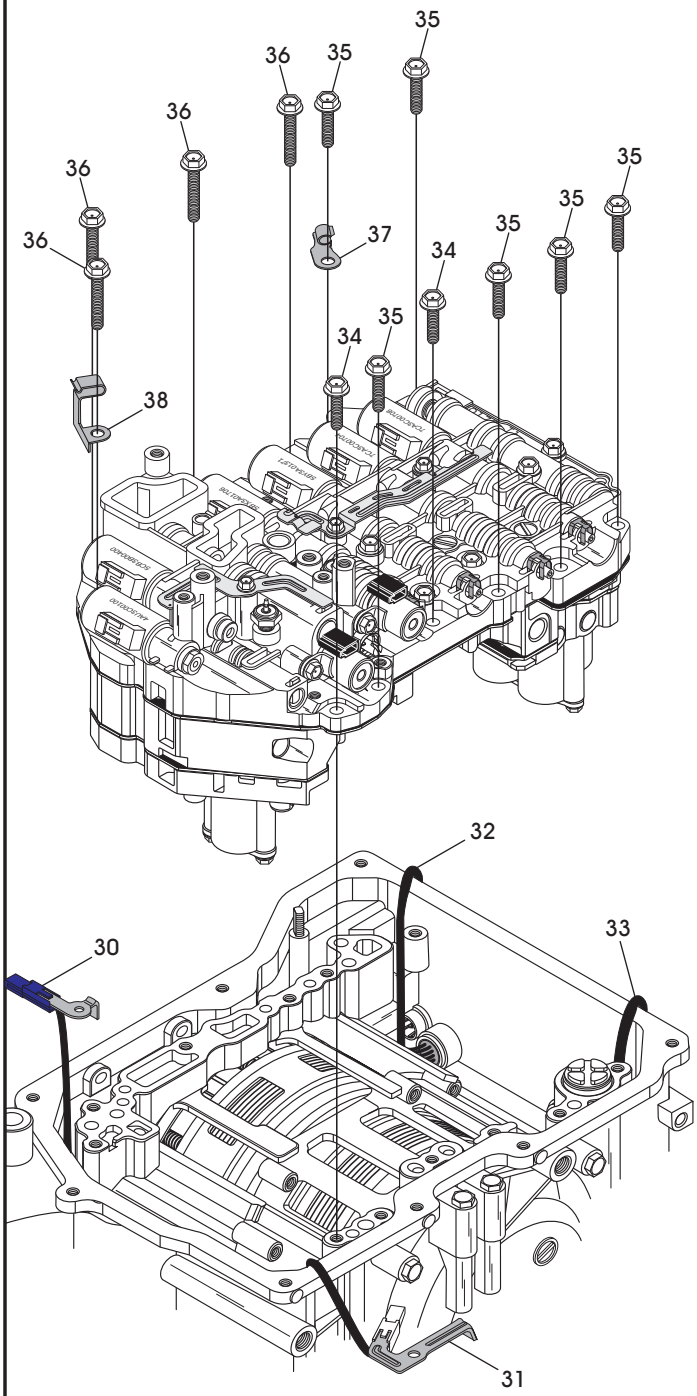

30 OUTPUT SPEED SENSOR HARNESS OVER PAN RAIL.
31 INPUT SPEED SENSOR HARNESS OVER PAN RAIL.
32 SENSOR AND SWITCH HARNESS OVER PAN RAIL.
33 14 WAY SOLENOID HARNESS OVER PAN RAIL.
34 VALVE BODY TO CASE BOLT (16 MM LENGTH).
35 VALVE BODY TO CASE BOLT (21 MM LENGTH).
36 VALVE BODY TO CASE BOLT (28 MM LENGTH).
37 WIRE HARNESS RETAINING BRACKET.
38 WIRE HARNESS RETAINING BRACKET.

Copyright © 2010 ATSG

Figure 60

WWW.ALL-TRANS.BY

TRANSAXLE DISASSEMBLY (CONT'D)

26. Remove the B1 accumulator piston and springs from transaxle case, as shown in Figure 61.
    Note: The number of B1 accumulator springs vary depending on year and model. Best is to tag springs for identification.
27. Remove the output speed sensor retaining bolt and output sensor, as shown in Figure 62.
    Note: This bolt has 8 mm head, 18 mm long.
28. Remove the input speed sensor retaining bolt and the input sensor, as shown in Figure 62.
    Note: This bolt has 10 mm head, 21 mm long.

Continued on Page 49

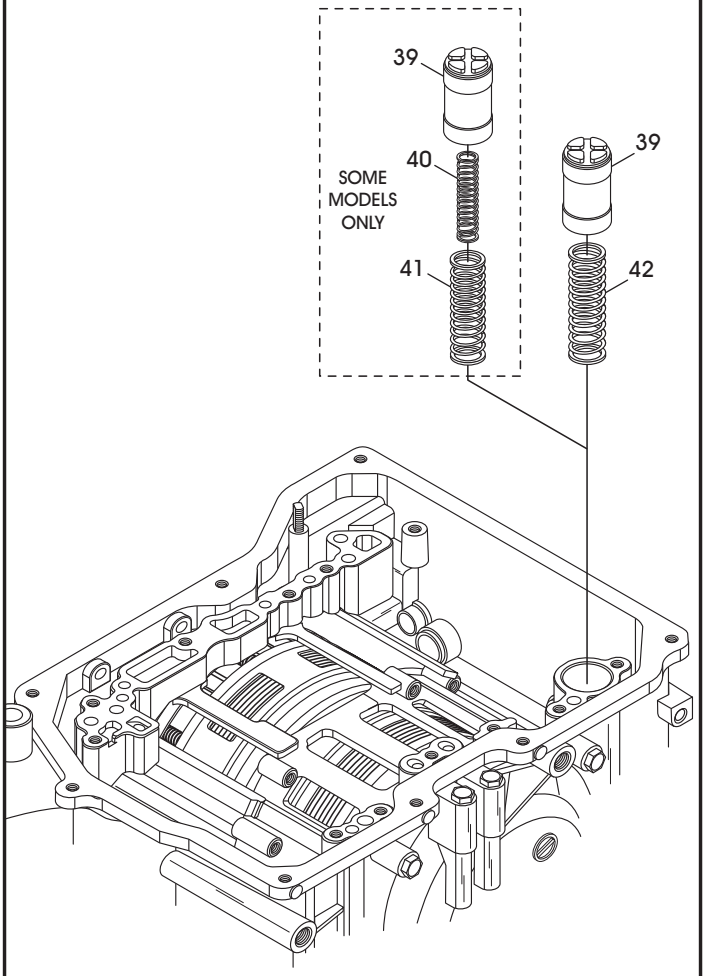

39 B1 ACCUMULATOR PISTON.
40 B1 ACCUMULATOR PISTON INNER SPRING (SOME MODELS).
41 B1 ACCUMULATOR PISTON OUTER SPRING.
42 B1 ACCUMULATOR PISTON SPRING.

Copyright © 2010 ATSG

Figure 61

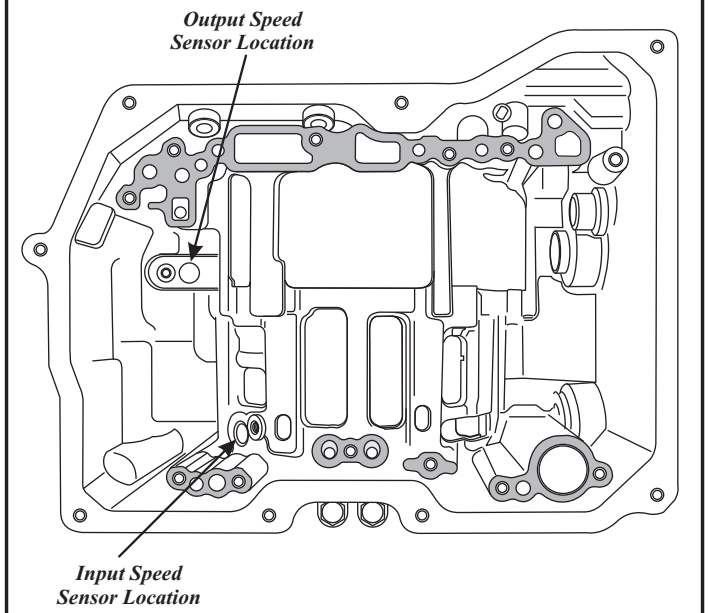

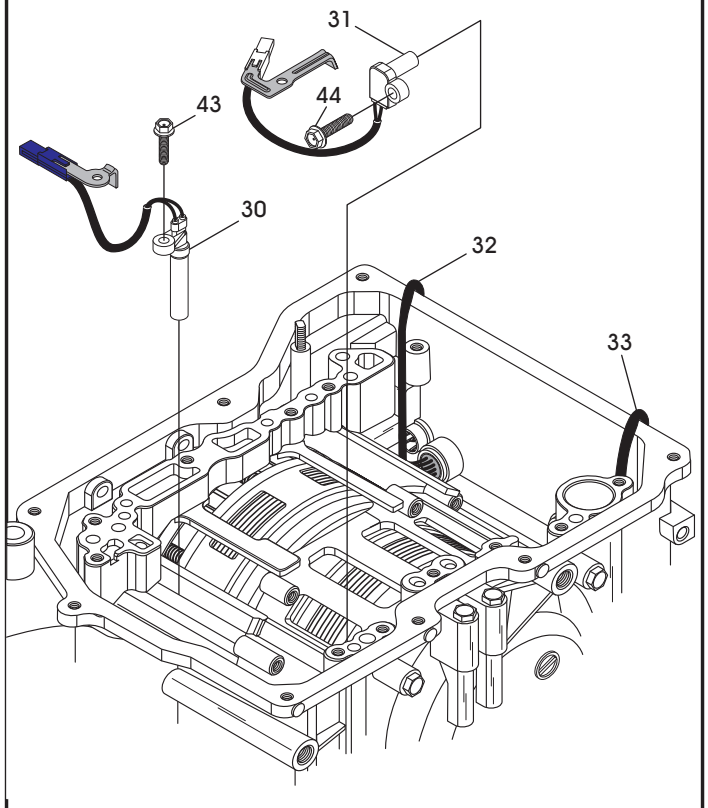

30 OUTPUT SPEED SENSOR AND HARNESS ASSEMBLY.
31 INPUT SPEED SENSOR AND HARNESS ASSEMBLY.
32 SENSOR AND SWITCH HARNESS OVER PAN RAIL.
33 14 WAY SOLENOID HARNESS OVER PAN RAIL.
43 OUTPUT SPEED SENSOR RETAINING BOLT (18 MM LENGTH).
44 INPUT SPEED SENSOR RETAINING BOLT (22 MM LENGTH).

Copyright © 2010 ATSG

Figure 62

WWW.ALL-TRANS.BY

TRANSAXLE DISASSEMBLY (CONT'D)

29. Remove the retaining bolt from 8-way connector and carefully remove the 8-way connector and wiring harness assembly, through the case bore, as shown in Figure 63.
    Note: Remove and discard the case connector "O" ring and temp sensor "O" ring.
30. Remove retaining bolt from 14-way connector and carefully remove the 14-way connector and wiring harness assembly through the case bore, as shown in Figure 63.
    Note: Remove and discard the case connector "O" ring.

Continued on Page 50

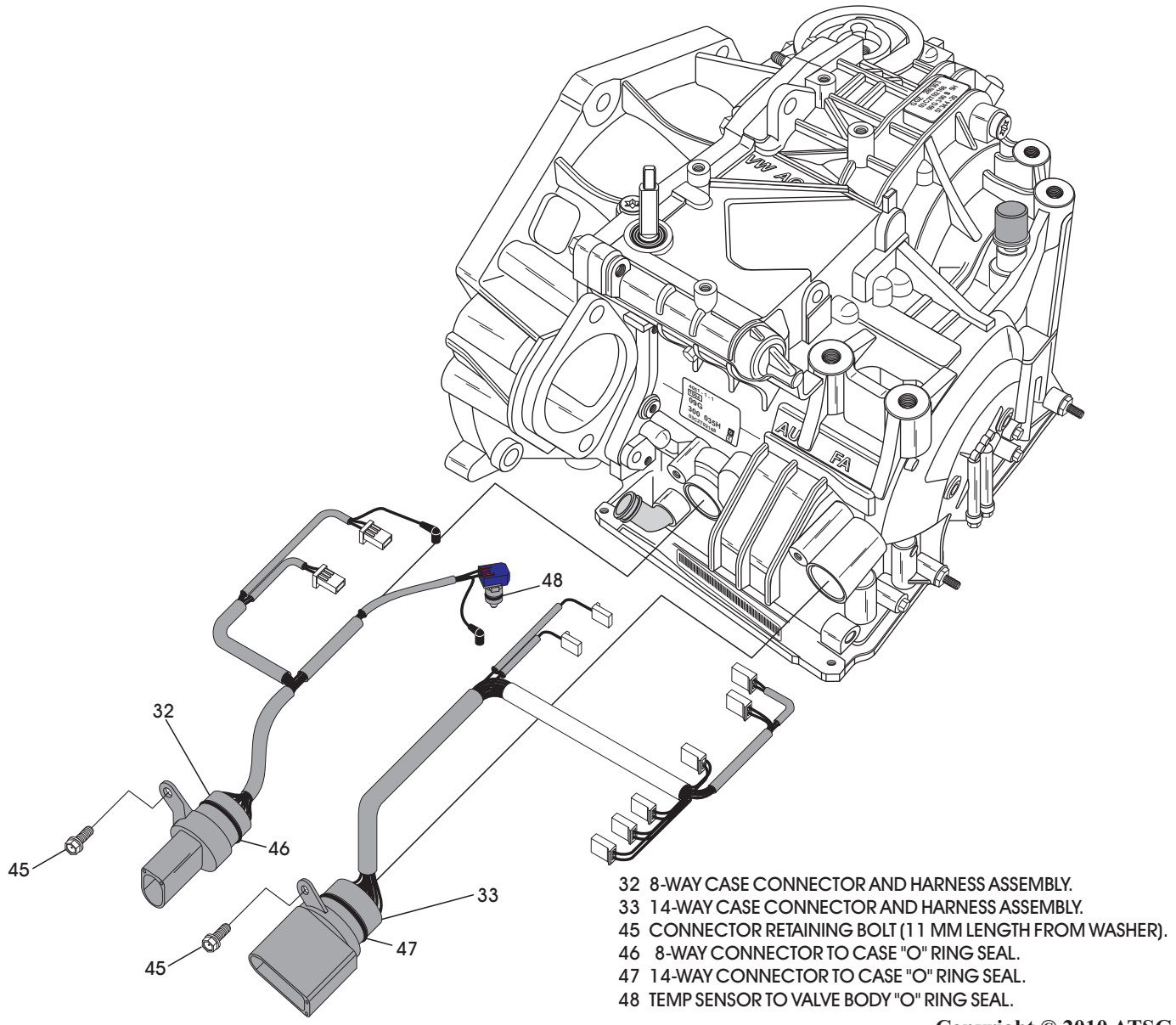

Copyright © 2010 ATSG

Figure 63

WWW.ALL-TRANS.BY

TRANSAXLE DISASSEMBLY (CONT'D)

31. Position transaxle so that converter housing is facing up, as shown in Figure 64.
32. Remove the 21 converter housing bolts shown in Figure 65, using a 12 mm socket or wrench.
    Note: Converter housing bolt configuration will vary depending on model and year. Some locations have "stud" bolts (See Figure 65).

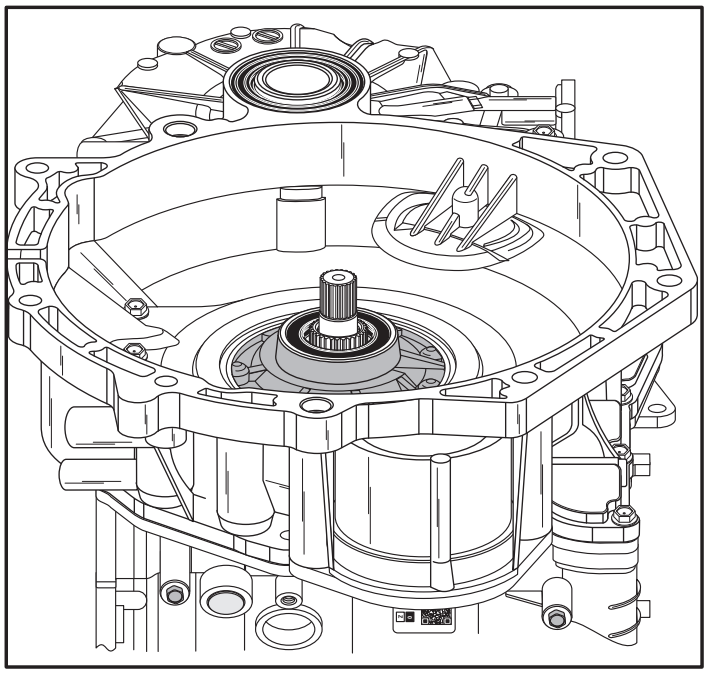

Figure 64

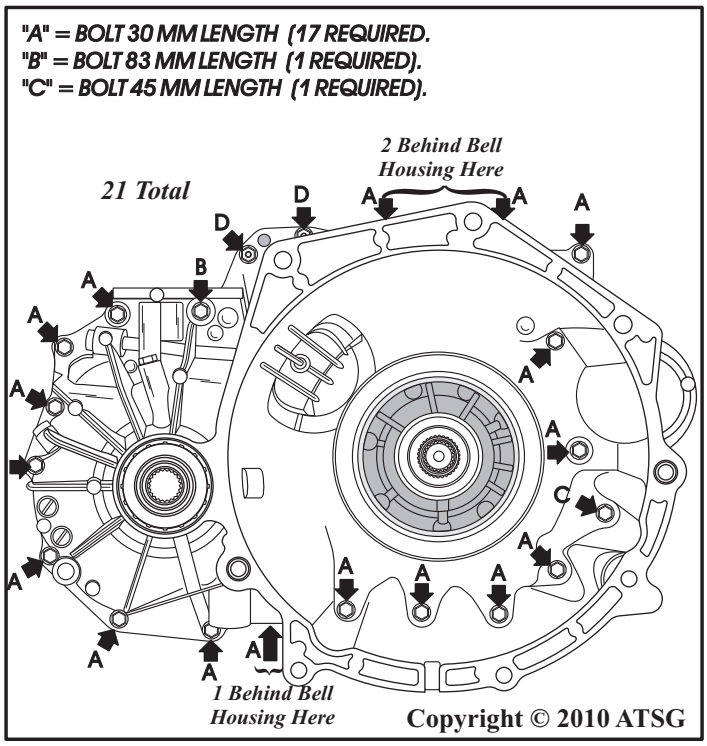

Figure 65

TRANSAXLE DISASSEMBLY (CONT'D)

33. Remove the converter housing from transaxle case by tapping with a mallet to loosen housing from dowels and sealant (See Figure 66).
34. Set the converter housing aside for component rebuild section.

Continued on Page 51

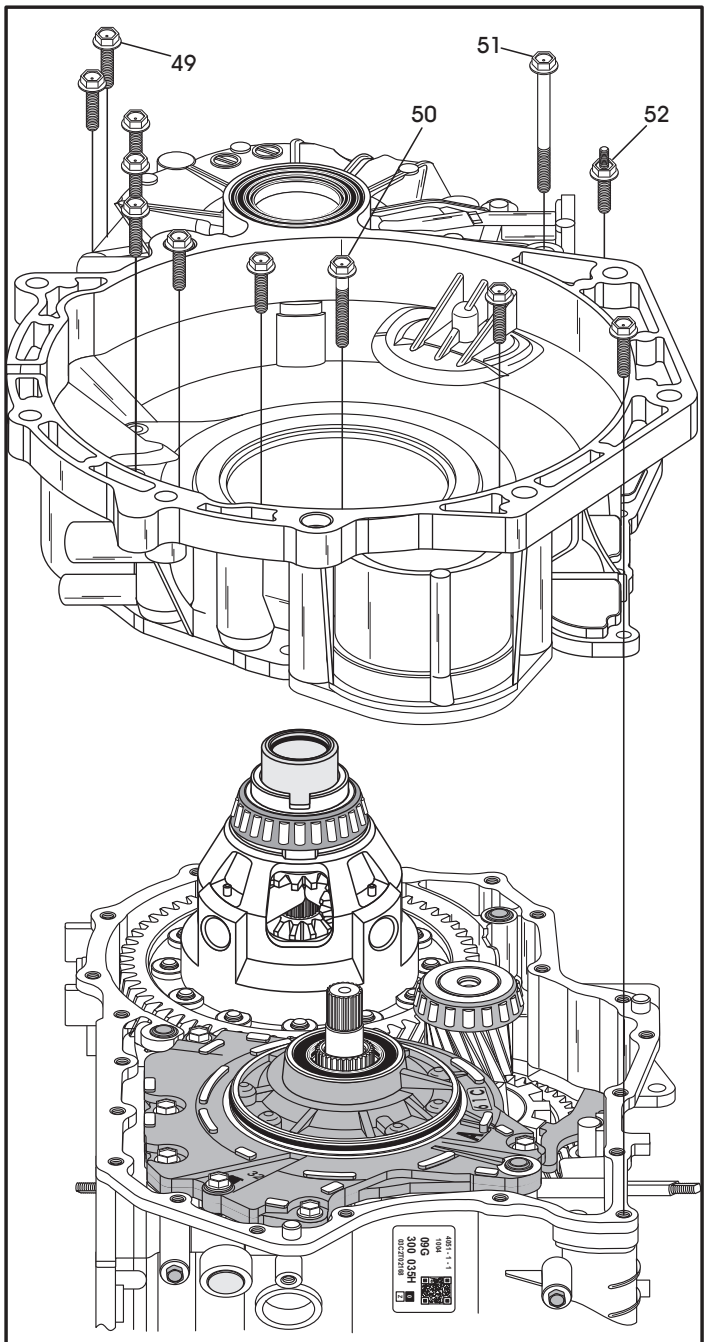

Figure 66

WWW.ALL-TRANS.BY

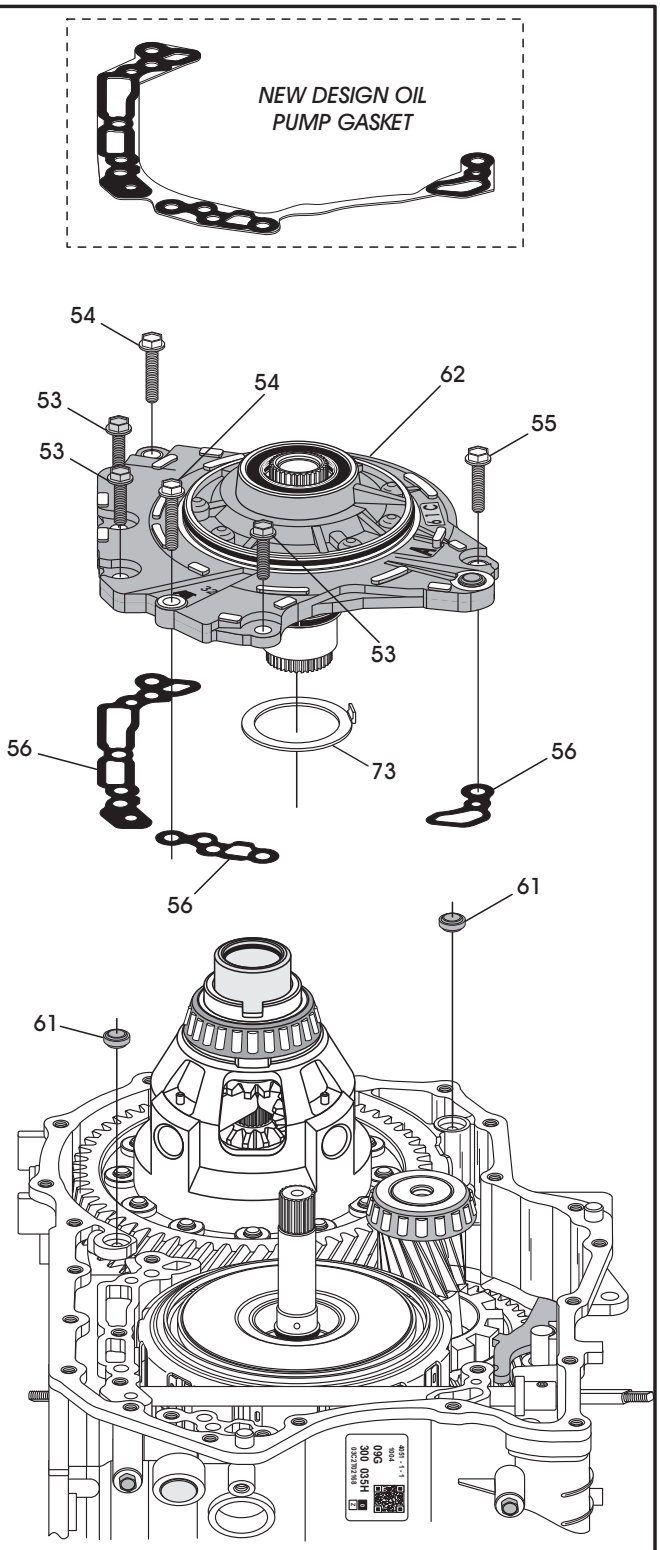

53 OIL PUMP RETAINING BOLT (22 MM LENGTH, 3 REQUIRED).
54 OIL PUMP RETAINING BOLT (30 MM LENGTH, 2 REQUIRED).
55 OIL PUMP RETAINING BOLT (25 MM LENGTH, 1 REQUIRED).
56 OIL PUMP TO CASE GASKETS (EARLY DESIGN).
61 CONVERTER COVER TO CASE SEALS (2 REQUIRED).
62 OIL PUMP ASSEMBLY.
73 OIL PUMP TO K3 CLUTCH HOUSING THRUST WASHER (NO. 1).

Copyright © 2010 ATSG

Figure 67

TRANSAXLE DISASSEMBLY (CONT'D)

35. Remove the six oil pump retaining bolts, as shown in Figure 67.
    Note: There are 3 different lengths and position is critical. Label if necessary.
36. Remove the oil pump assembly, as shown in Figure 67, and set aside for component rebuild.
    Note: Number 1 thrust washer may be stuck to back of oil pump (See Figure 67).
37. Remove and discard the three oil pump to case gaskets, as shown in Figure 67.
    Note: New design pump gasket with all three gaskets mounted on steel core is included in Trans-Tec® gasket set (See Figure 67).
38. Remove and discard the two case to converter cover seals, as shown in Figure 67.
39. Measure the distance from case pump surface to the washer surface on the K3 clutch housing, as shown in Figure 68, using a straight edge and ruler, or a depth micrometer.
    Note: Record this measurement to use in the reassembly process.

Continued on Page 52

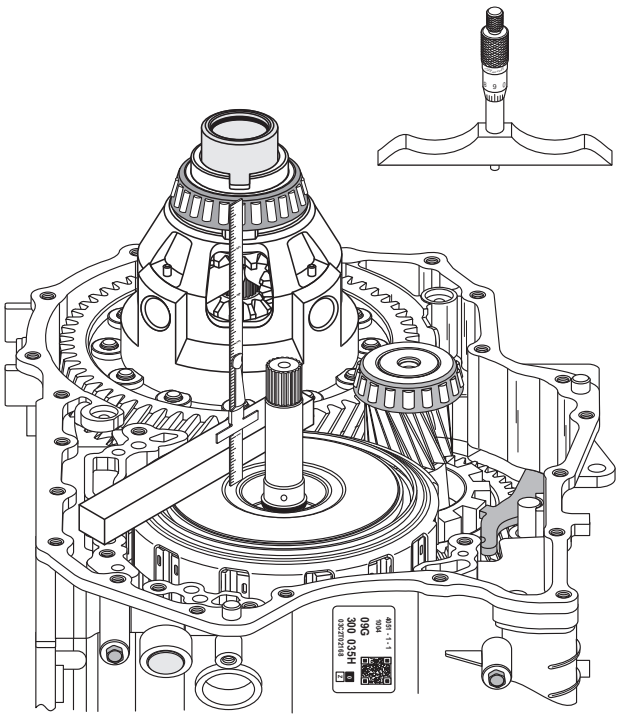

Copyright © 2010 ATSG

Figure 68

WWW.ALL-TRANS.BY

TRANSAXLE DISASSEMBLY (CONT'D)

40. Remove the "rolled" pin from the inside detent lever using a 3/16" punch and hammer, as shown in Figure 69.
    Note: There is a safety band around the inside detent lever that must be removed first. Only way to get it off is to break it and discard it. The safety band will not be reused.
41. Remove the manual shaft from the top side of the transaxle, as shown in Figure 70, by sliding out through the inside detent lever and the case bore.
42. Remove the inside detent lever and park rod, as shown in Figure 70.
43. Remove and discard the manual shaft seal in the case, as shown in Figure 70.

Continued on Page 53

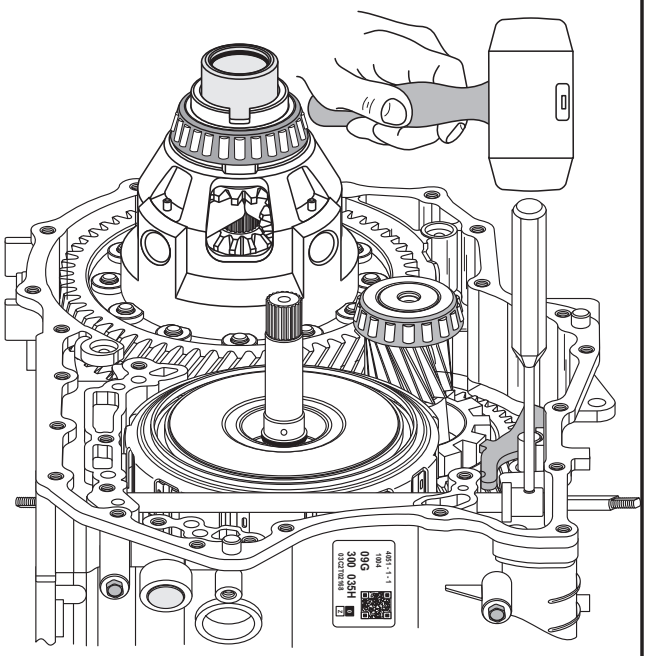

Copyright © 2010 ATSG

Figure 69

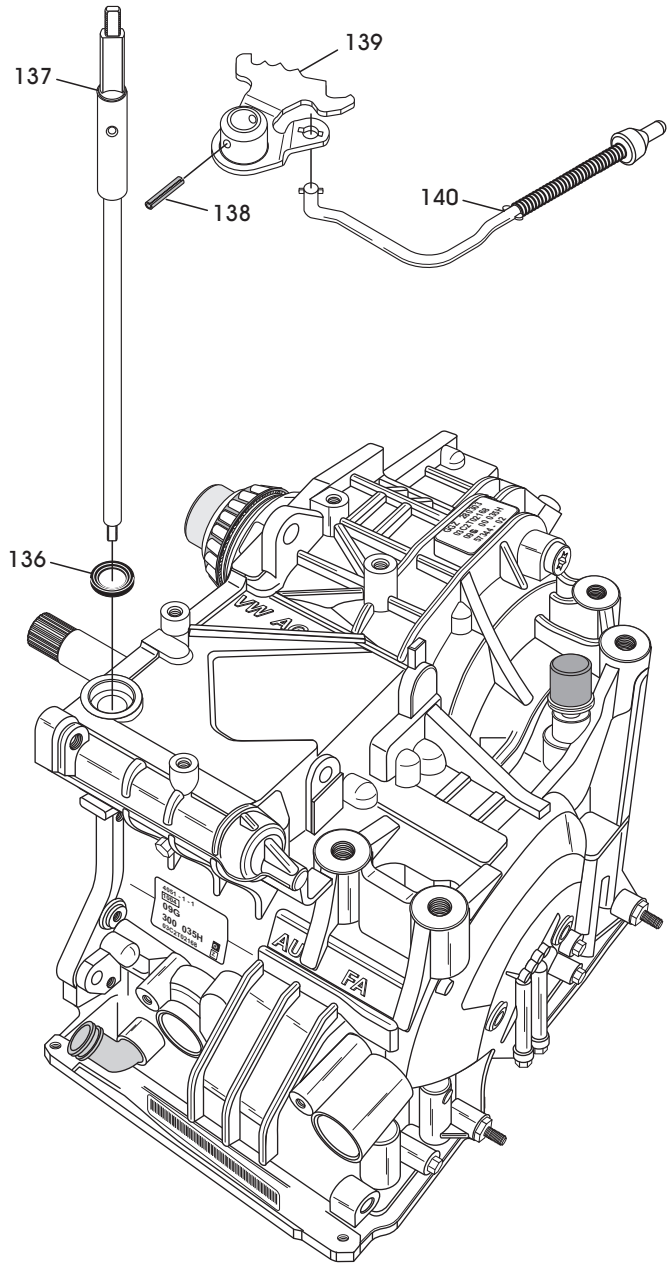

136 MANUAL SHAFT SEAL.
137 MANUAL SHAFT.
138 ROLLED PIN.
139 INSIDE DETENT LEVER.
140 PARKING ROD.

Copyright © 2010 ATSG

Figure 70

WWW.ALL-TRANS.BY

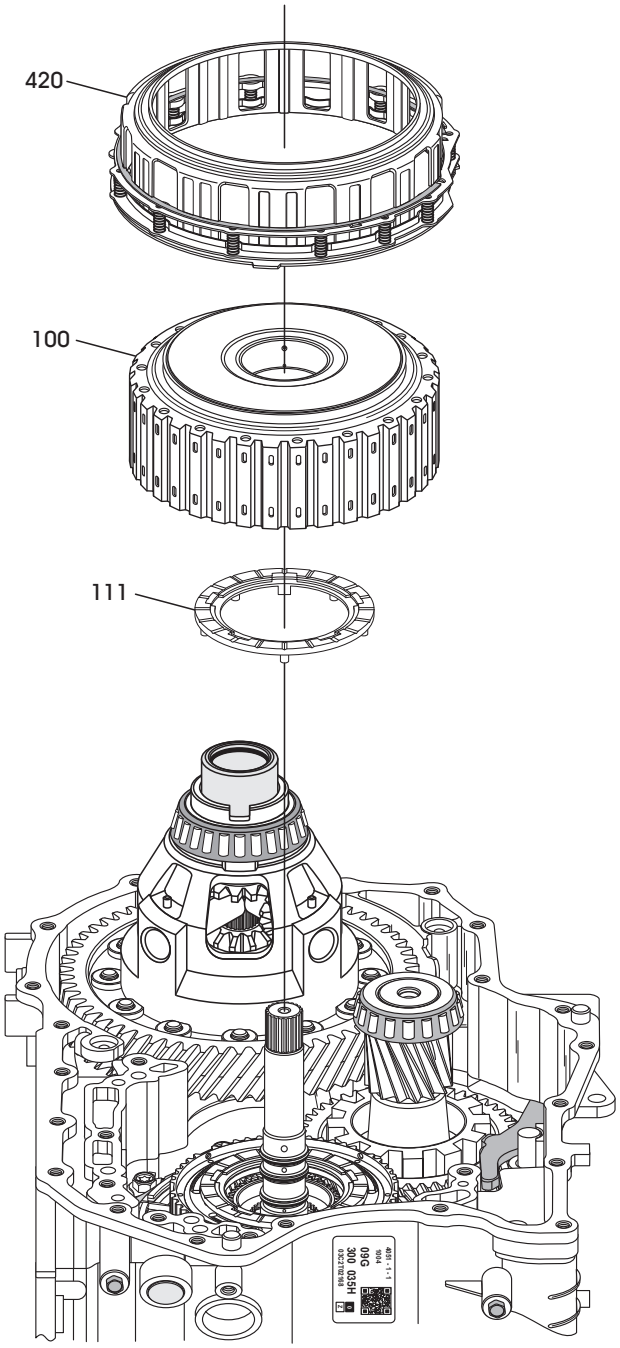

100 K3 CLUTCH HOUSING ASSEMBLY.
111 NUMBER 2 THRUST WASHER.
420 B1 CLUTCH APPLY RING AND RETURN SPRING ASSEMBLY.

Copyright © 2010 ATSG

Figure 71

TRANSAXLE DISASSEMBLY (CONT'D)

44. Remove the B1 clutch apply ring and return spring assembly, as shown in Figure 71.
45. Remove the K3 clutch housing assembly, as shown in Figure 71, and set aside for the component rebuild section.
    Note: Number 2 thrust washer may be stuck to back of K3 clutch housing.
46. Remove the front planetary as an assembly, by lifting assembly straight up using the input shaft, as shown in Figure 72.

Continued on Page 54

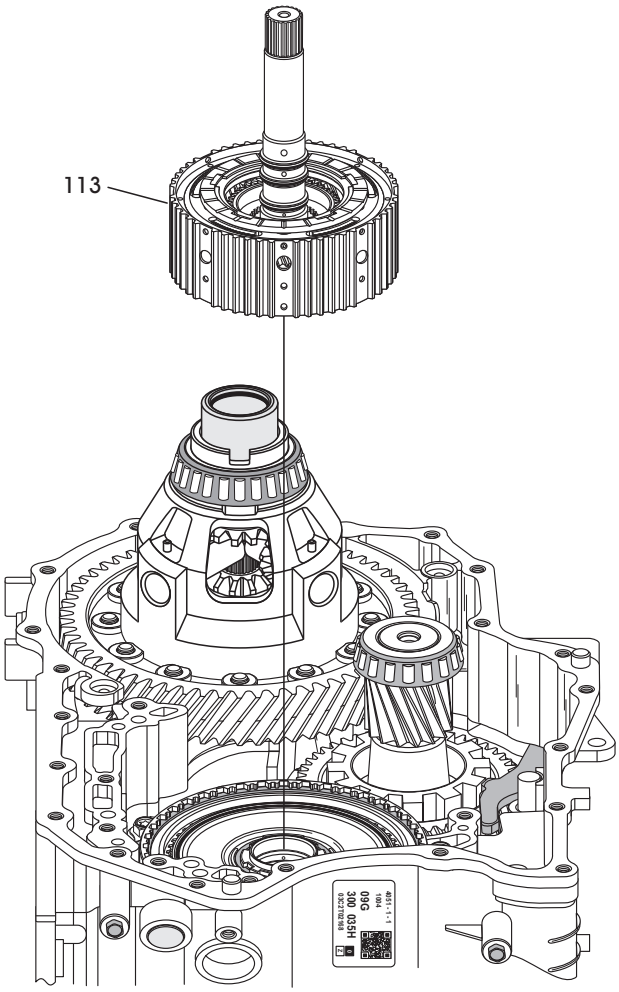

113 FRONT PLANETARY ASSEMBLY.

Copyright © 2010 ATSG

Figure 72

WWW.ALL-TRANS.BY

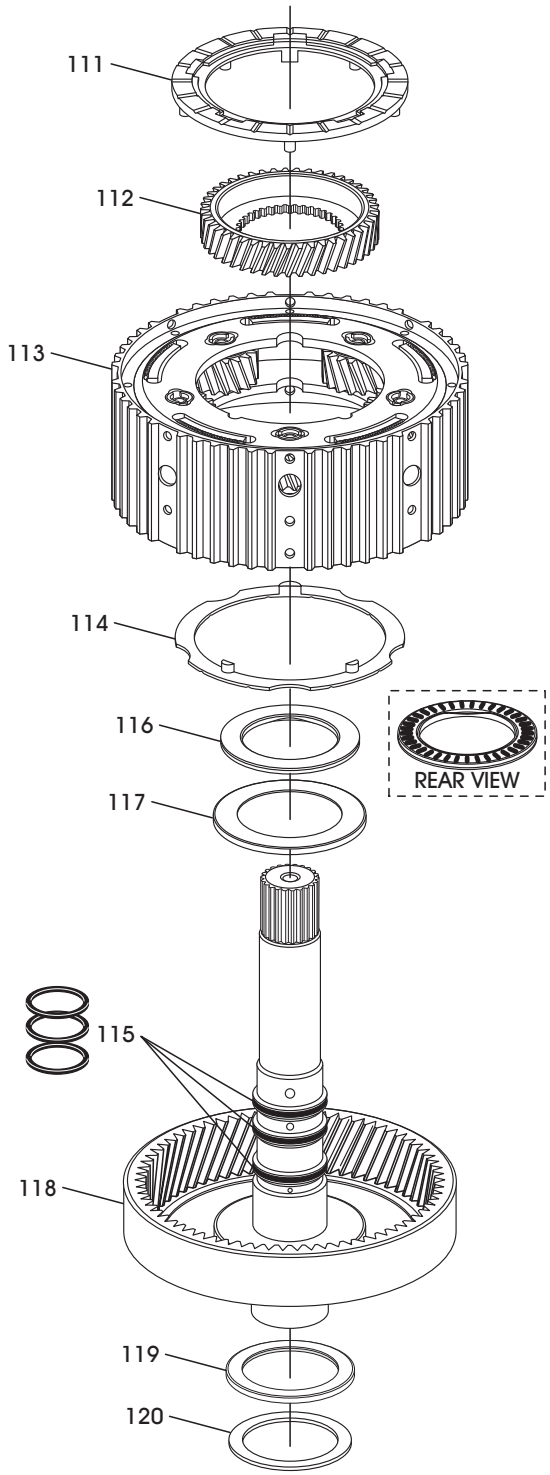

111 NUMBER 2 THRUST WASHER.
112 FRONT PLANETARY SUN GEAR.
113 FRONT PLANETARY CARRIER ASSEMBLY.
114 NUMBER 4 THRUST WASHER.
115 INPUT SHAFT SEALING RINGS (3 REQUIRED).
116 NUMBER 3 THRUST BEARING.
117 NUMBER 3 THRUST BEARING RACE.
118 FRONT PLANETARY RING GEAR AND INPUT SHAFT ASSEMBLY.
119 NUMBER 5 THRUST BEARING.
120 NUMBER 5 THRUST BEARING RACE.

Copyright © 2010 ATSG

Figure 73

TRANSAXLE DISASSEMBLY (CONT'D)

47. Seperate and inspect front planetary components, as shown in Figure 73.
48. Remove K1 clutch housing assembly, as shown in Figure 74, and set aside for the component rebuild section.
49. Remove the K3 clutch housing drive hub, as shown in Figure 74, along with the number 6 thrust bearing and bearing race.

Continued on Page 55

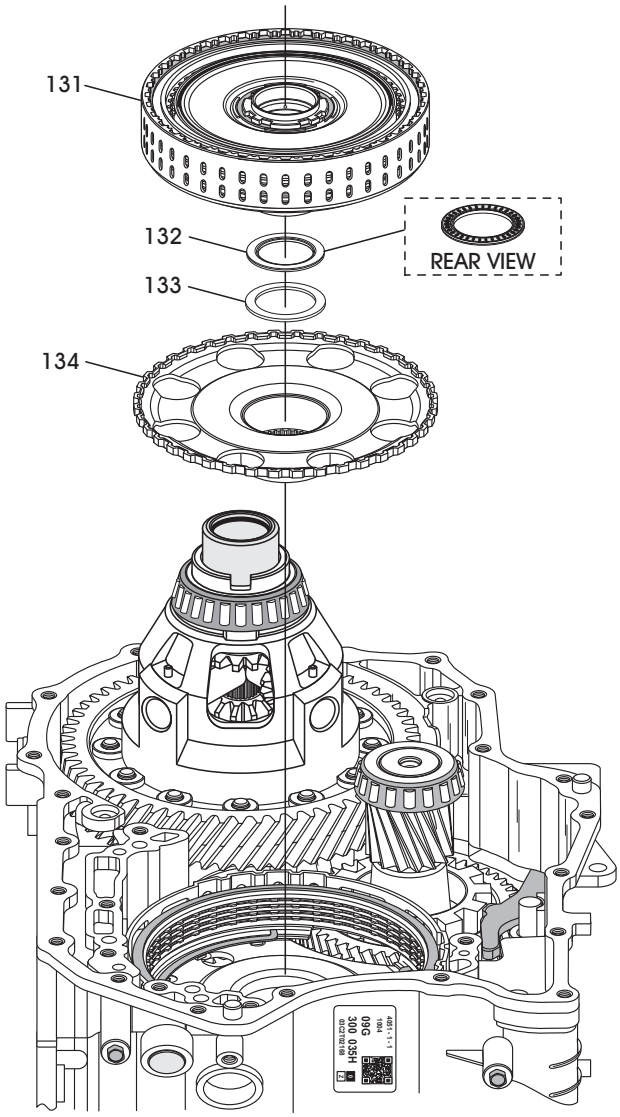

131 K1 CLUTCH HOUSING ASSEMBLY.
132 NUMBER 6 THRUST BEARING.
133 NUMBER 6 THRUST BEARING RACE.
134 K3 CLUTCH HOUSING DRIVE HUB.

Copyright © 2010 ATSG

Figure 74

WWW.ALL-TRANS.BY

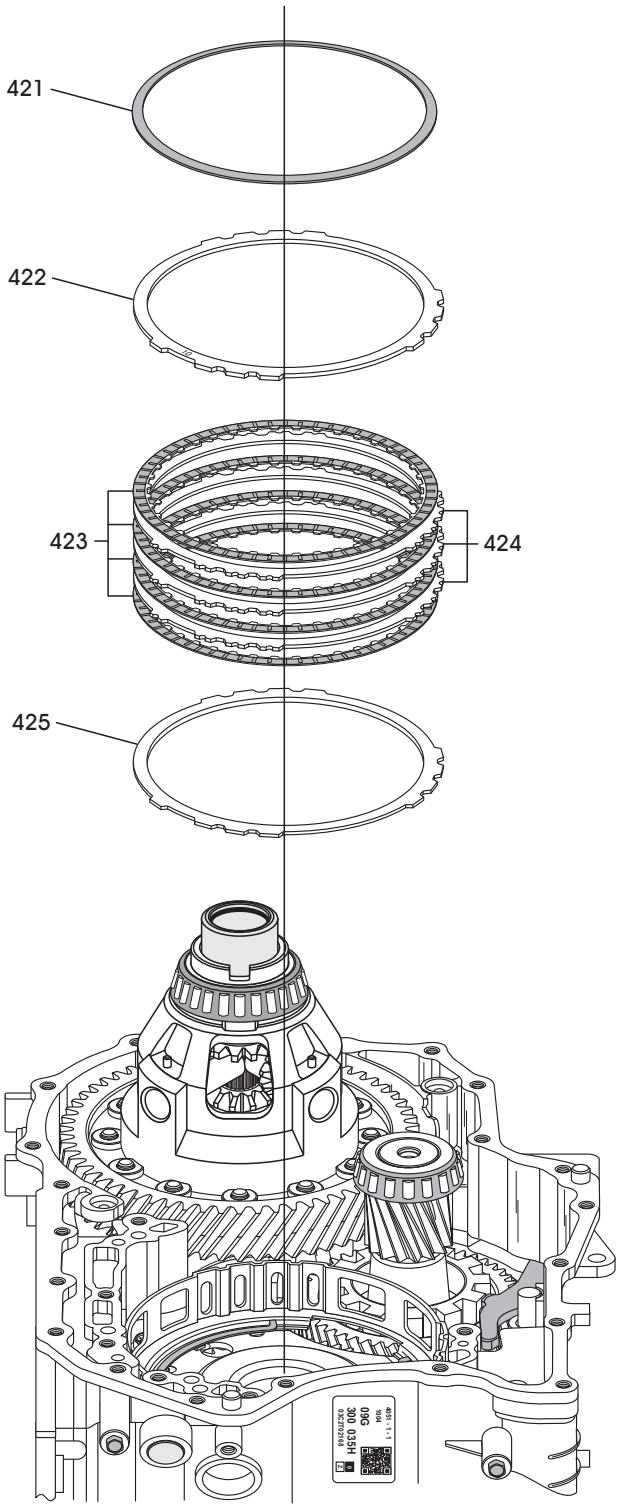

421 B1 CLUTCH "BELLVILLE" CUSHION SPRING.
422 B1 CLUTCH BACKING PLATE.
423 B1 CLUTCH FRICTION PLATES (QTY MAY VARY).
424 B1 CLUTCH STEEL PLATES (QTY MAY VARY).
425 B1 CLUTCH PRESSURE PLATE.

Copyright © 2010 ATSG

Figure 75

TRANSAXLE DISASSEMBLY (CONT'D)

50. Remove the B1 clutch pack from the B1 clutch housing, as shown in Figure 75.
51. Remove the B1 clutch housing retaining snap ring, as shown in Figure 76, and remove the B1 clutch housing.
    Note: This snap ring is identified by two small "turn-outs" at snap ring ends, as shown in Figure 76.

Continued on Page 56

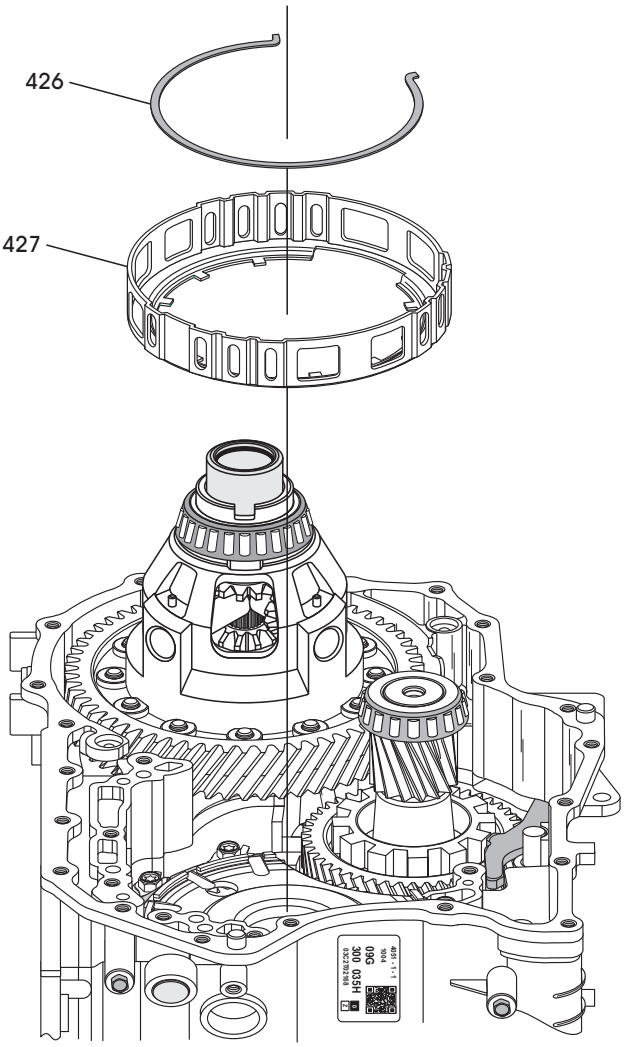

426 B1 CLUTCH HOUSING RETAINING SNAP RING.
427 B1 CLUTCH HOUSING.

Copyright © 2010 ATSG

Figure 76

WWW.ALL-TRANS.BY

TRANSAXLE DISASSEMBLY (CONT'D)

52. Remove the 2 parking rod guide retaining bolts using a 10mm socket, as shown in Figure 78, and remove parking rod guide.
    Note: It is not necessary to remove the inside detent spring unless it is damaged.
53. Remove the park pawl pivot pin case plug from rear of case, as shown in Figure 77.
54 Remove and discard case plug "O" ring seal, as shown in Figure 77.
55. Remove the park pawl pivot pin, using a small pocket magnet, through the case plug bore, as shown in Figure 77.

Continued on Page 57

PARK LINKAGE EXPLODED VIEW

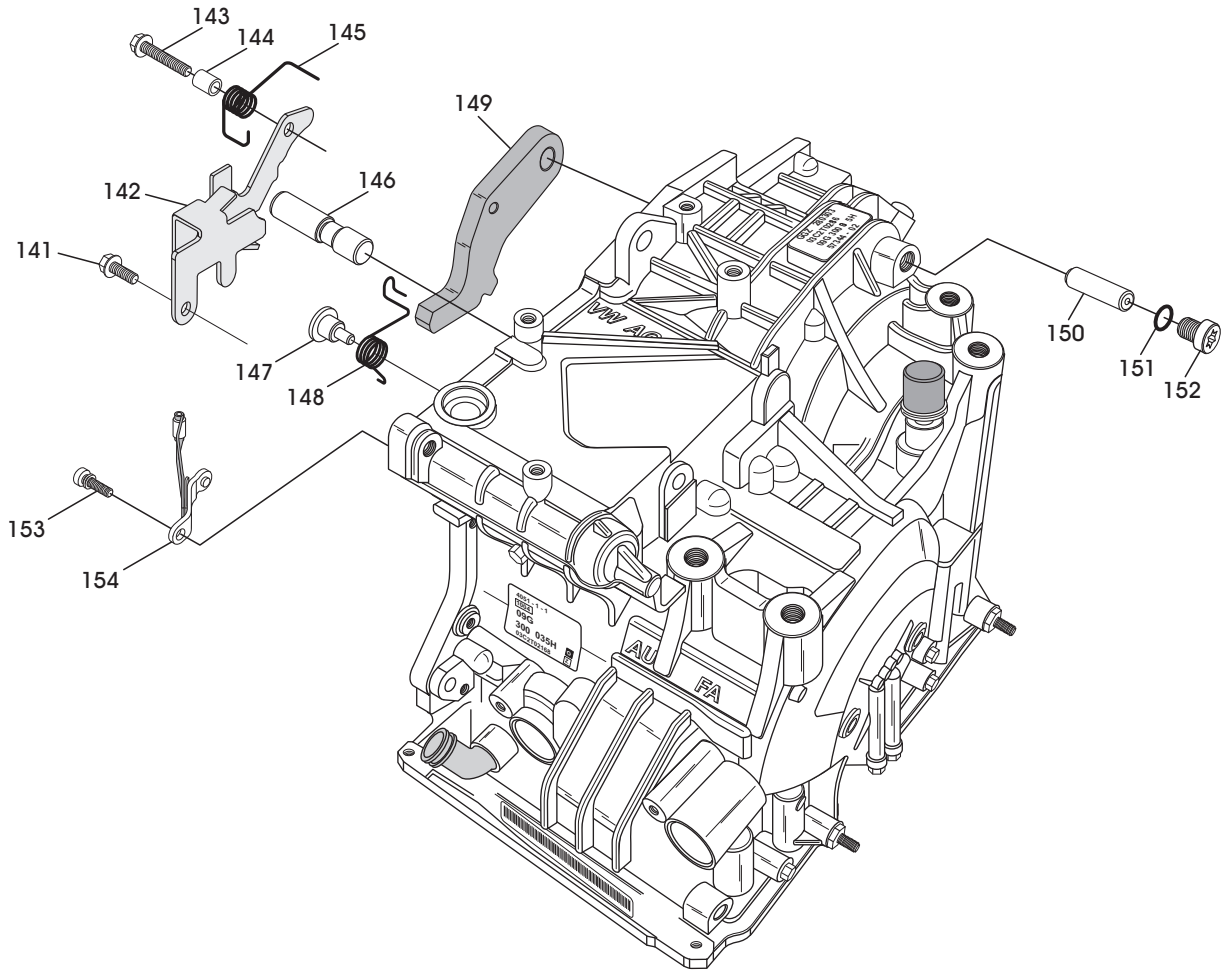

141 PARK ROD GUIDE RETAINING BOLT (14 MM LENGTH).
142 PARK ROD GUIDE.
143 PARK ROD GUIDE RETAINING BOLT (28 MM LENGTH).
144 PARK PAWL RETURN SPRING SLEEVE.
145 PARK PAWL RETURN SPRING.
146 PARK ROD ROLLER AND PIN ASSEMBLY.
147 PARK PAWL ANTI-RATTLE SPRING PIVOT PIN.
148 PARK PAWL ANTI-RATTLE SPRING.
149 PARK PAWL.
150 PARK PAWL PIVOT PIN.
151 PARK PAWL CASE PLUG "O" RING SEAL
152 PARK PAWL CASE PLUG.
153 INSIDE DETENT SPRING RETAINING BOLT.
154 INSIDE DETENT SPRING.

Copyright © 2010 ATSG

Figure 77

WWW.ALL-TRANS.BY

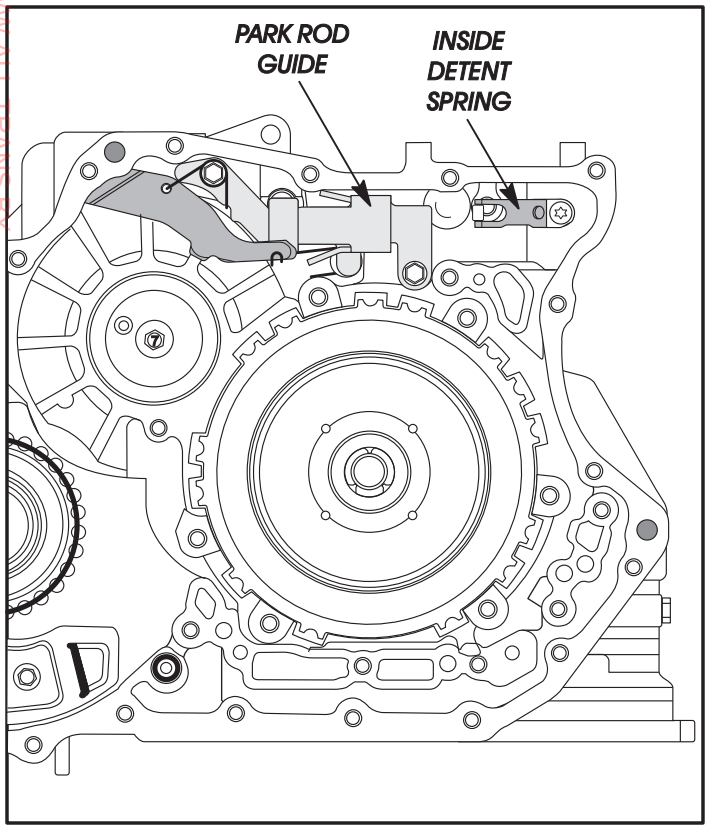

Figure 78

TRANSAXLE DISASSEMBLY (CONT'D)

56. Remove park pawl anti-rattle spring and pivot pin, as shown in Figure 79.
57. Remove the park rod roller and pin assembly, as shown in Figure 79.
58. Remove the park pawl as shown in Figure 79.

Continued on Page 58

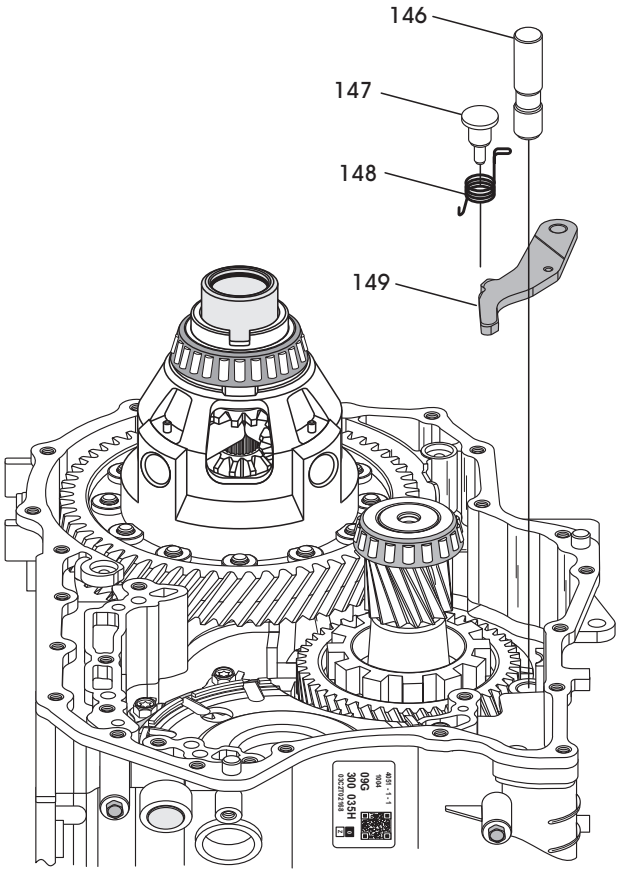

146 PARK ROD ROLLER AND PIN ASSEMBLY.
147 PARK PAWL ANTI-RATTLE SPRING PIVOT PIN.
148 PARK PAWL ANTI-RATTLE SPRING.
149 PARK PAWL.

Copyright © 2010 ATSG

Figure 79

WWW.ALL-TRANS.BY

TRANSAXLE DISASSEMBLY (CONT'D)

59. With the parking pawl removed, you can now remove the transfer driven gear and pinion gear assembly and the final drive assembly, as shown in Figure 80, and set aside for the component rebuild section.
60. Remove the six center support retaining bolts, as shown in Figure 81, using a T-50 Torx bit or a 14mm socket.
    Note: These six bolts are equipped with locking tab washers that must have the locking tab bent down before removing.
61. Remove the center support assembly from the transaxle, as shown in Figure 81, and set the assembly aside for component rebuild.

Continued on Page 59

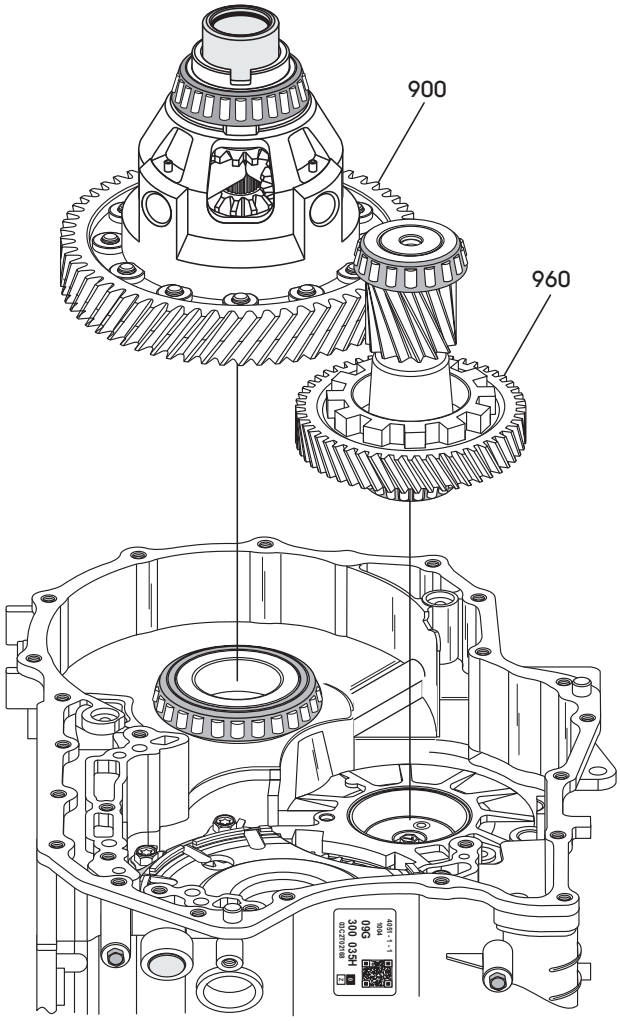

900 FINAL DRIVE ASSEMBLY.
960 TRANSFER DRIVEN GEAR AND PINION GEAR ASSEMBLY.

Copyright © 2010 ATSG

Figure 80

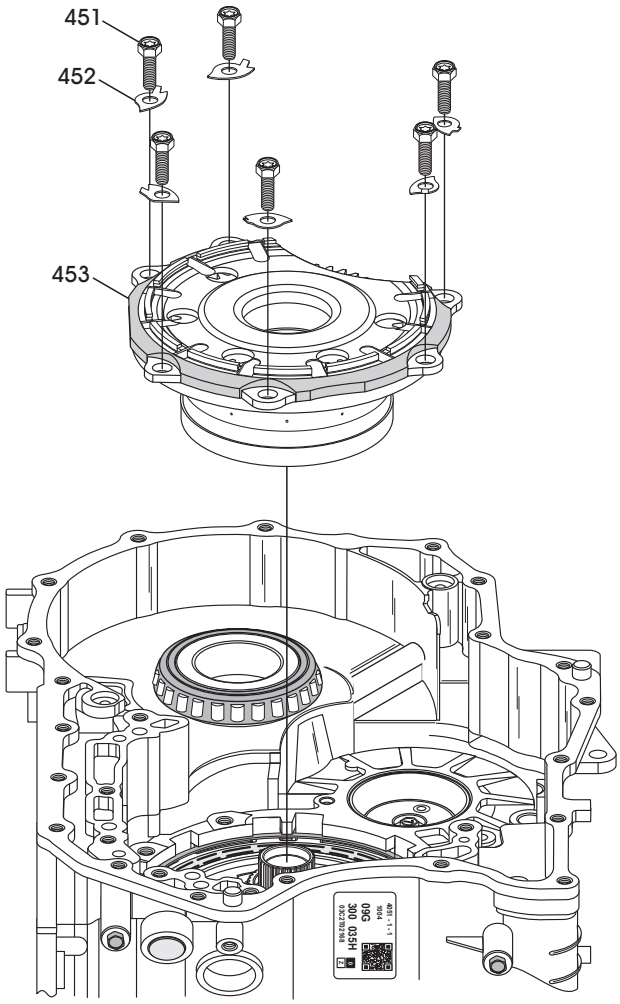

451 CENTER SUPPORT RETAINING BOLTS (6 REQUIRED).
452 CENTER SUPPORT BOLT LOCKING TABS (6 REQUIRED).
453 CENTER SUPPORT ASSEMBLY.

Copyright © 2010 ATSG

Figure 81

WWW.ALL-TRANS.BY

TRANSAXLE DISASSEMBLY (CONT'D)

62. Remove the snap ring retaining F1 roller clutch, as shown in Figure 82.
    Note: This snap ring is .050" in thickness.

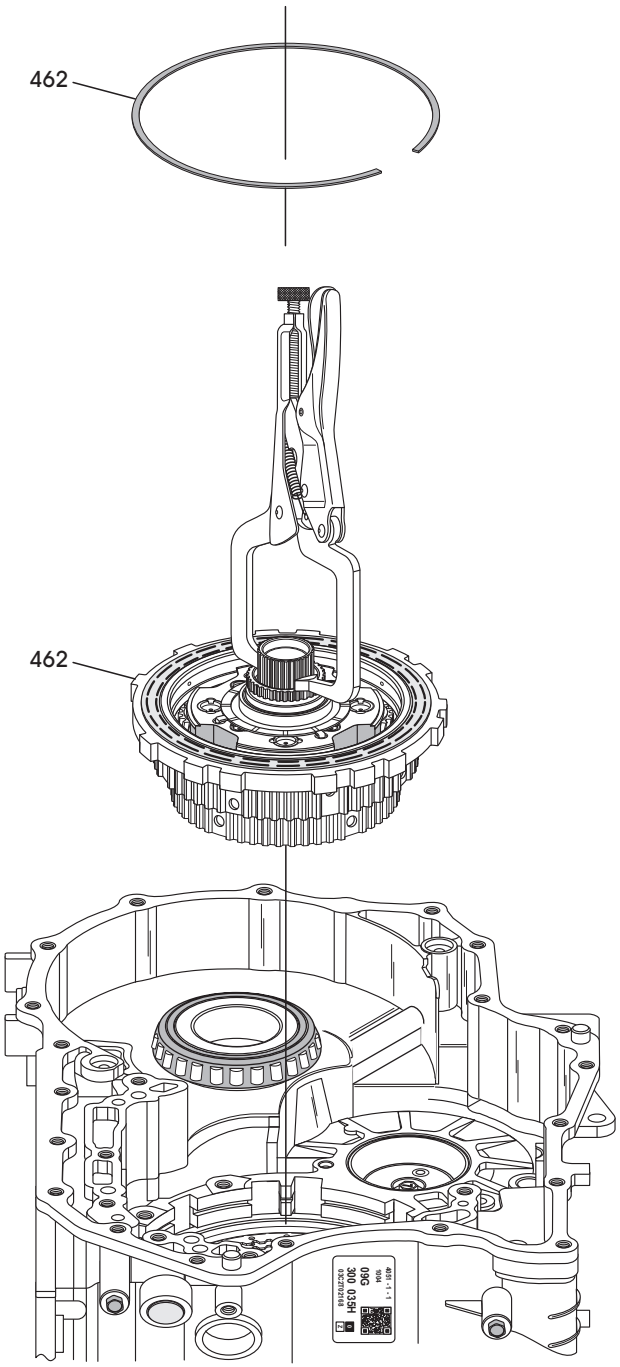

462 F1 ROLLER CLUTCH SNAP RING (.050" THICKNESS).
463 F1 ROLLER CLUTCH AND REAR GEAR SET ASSEMBLY.

Copyright © 2010 ATSG

Figure 82

63. Carefully install the style of vice-grips that are shown in Figure 82, to the splines of the small sun gear.
64. Use the vice-grips as a handle to remove the F1 roller clutch and rear planetary gear-set as an assembly, as shown in Figure 82, and set aside for the component rebuild section.
65. Remove the B2 clutch backing plate snap ring, as shown in Figure 83.
66. Remove the complete B2 clutch pack from the transaxle case, as shown in Figure 83.

Continued on Page 60

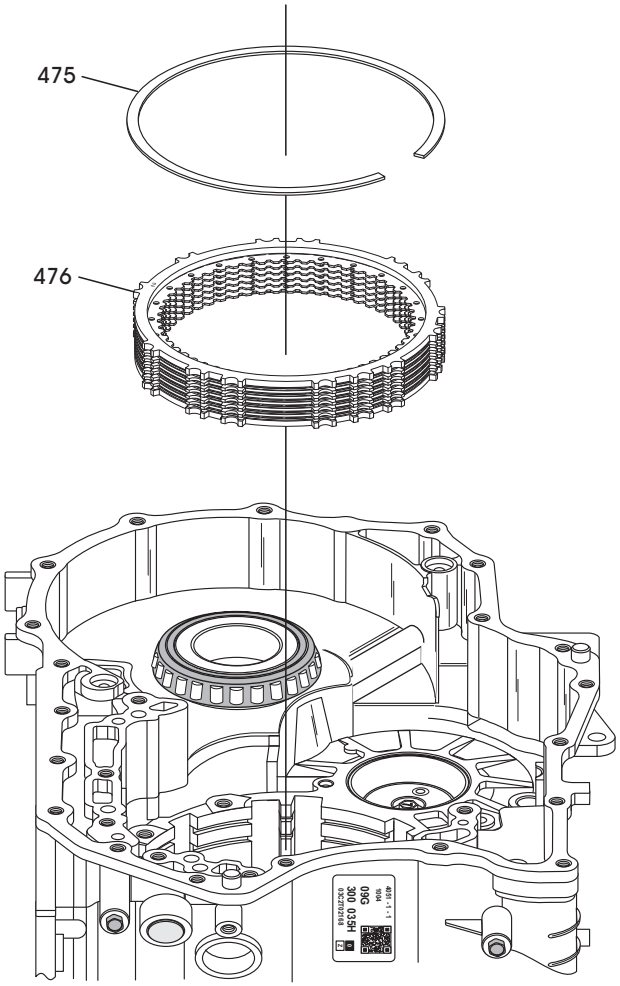

475 B2 CLUTCH BACKING PLATE SNAP RING.
476 B2 CLUTCH COMPLETE ASSEMBLY.

Copyright © 2010 ATSG

Figure 83

WWW.ALL-TRANS.BY

TRANSAXLE DISASSEMBLY (CONT'D)

67. Remove the K2 clutch housing assembly along with the number 9 thrust bearing and races, as shown in Figure 84, and set aside for component rebuild section.
    Note: Number 9 front thrust bearing race may be stuck to the small sun gear in rear gear-set.
68. Remove the number 11 thrust bearing and race, as shown in Figure 84.
    Note: Number 11 thrust bearing may be stuck to rear of K2 clutch housing.
69. Remove the B2 clutch return spring retaining snap ring, as shown in Figure 85.
70. Remove the B2 clutch return spring assembly, as shown in Figure 85.

Continued on Page 61

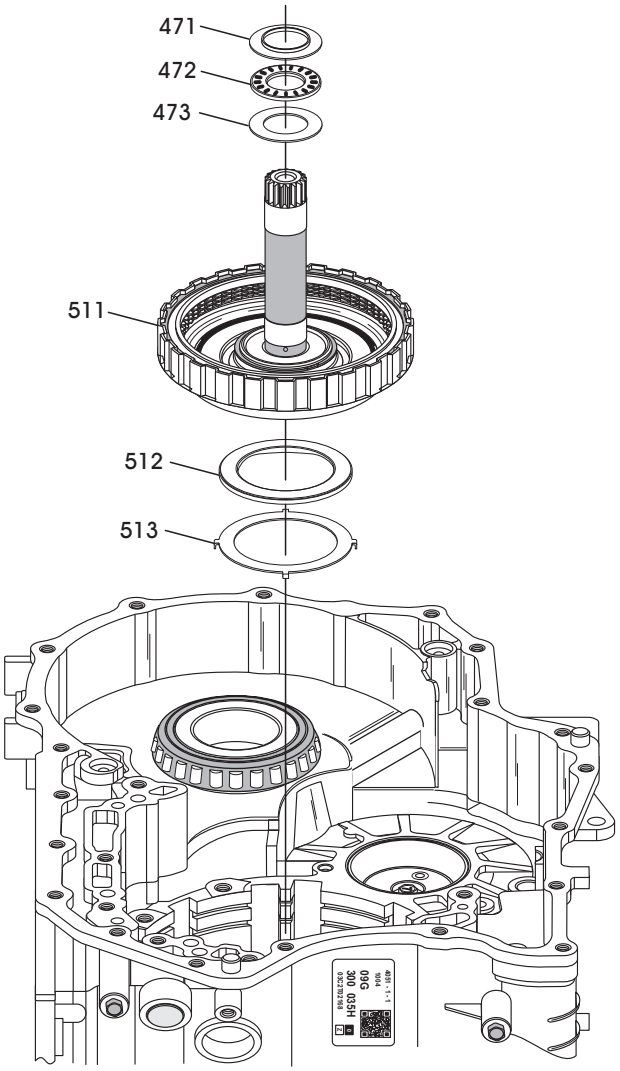

471 NUMBER 9 "FRONT" THRUST BEARING RACE.
472 NUMBER 9 THRUST BEARING.
473 NUMBER 9 "REAR" THRUST BEARING RACE.
511 K2 CLUTCH HOUSING ASSEMBLY.
512 NUMBER 11 THRUST BEARING.
513 NUMBER 11 THRUST BEARING RACE.

Copyright © 2010 ATSG

Figure 84

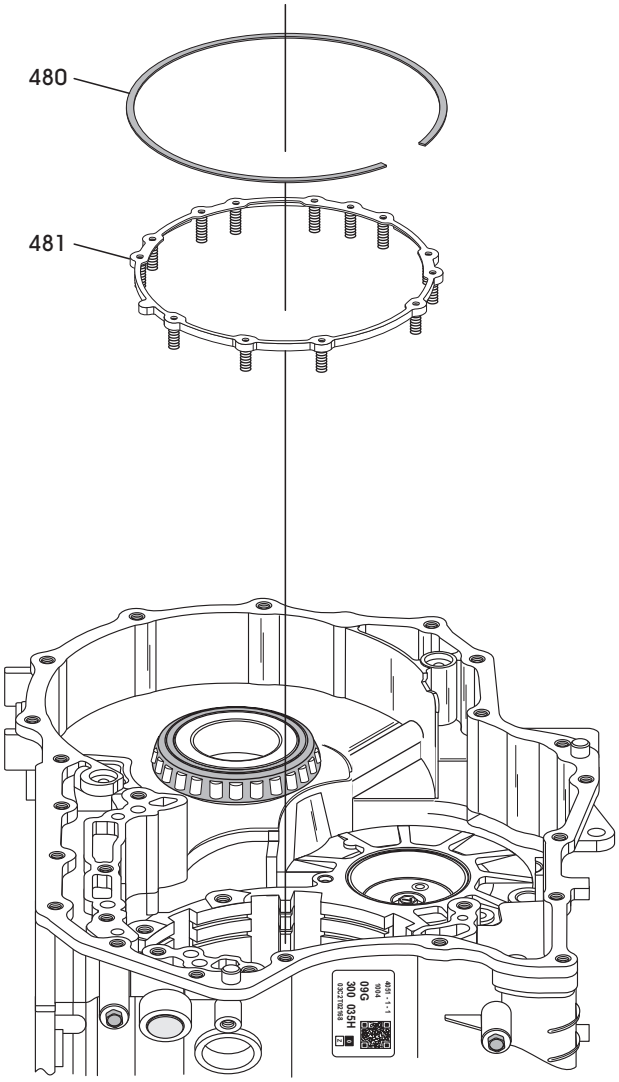

480 B2 CLUTCH RETURN SPRING SNAP RING (.048" THICKNESS).
481 B2 CLUTCH APPLY PISTON RETURN SPRING ASSEMBLY.

Copyright © 2010 ATSG

Figure 85

WWW.ALL-TRANS.BY

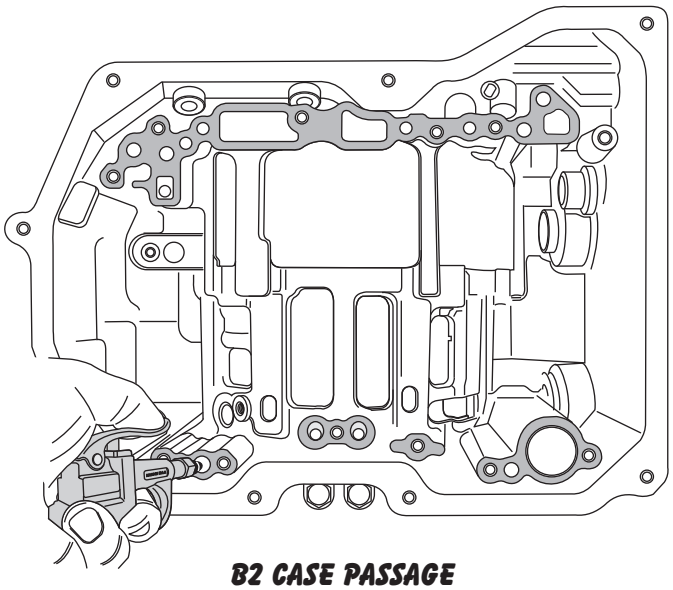

B2 CASE PASSAGE

Copyright © 2010 ATSG

Figure 86

TRANSAXLE DISASSEMBLY (CONT'D)

71. Apply compressed air to the B2 clutch passage in the case, as shown in Figure 86, to loosen the B2 clutch piston.
72. Remove the B2 clutch piston from transaxle case as shown in Figure 87.
73. Remove and discard the inner and outer "O" ring seals, as shown in Figure 88.
74. This completes transaxle disassembly.

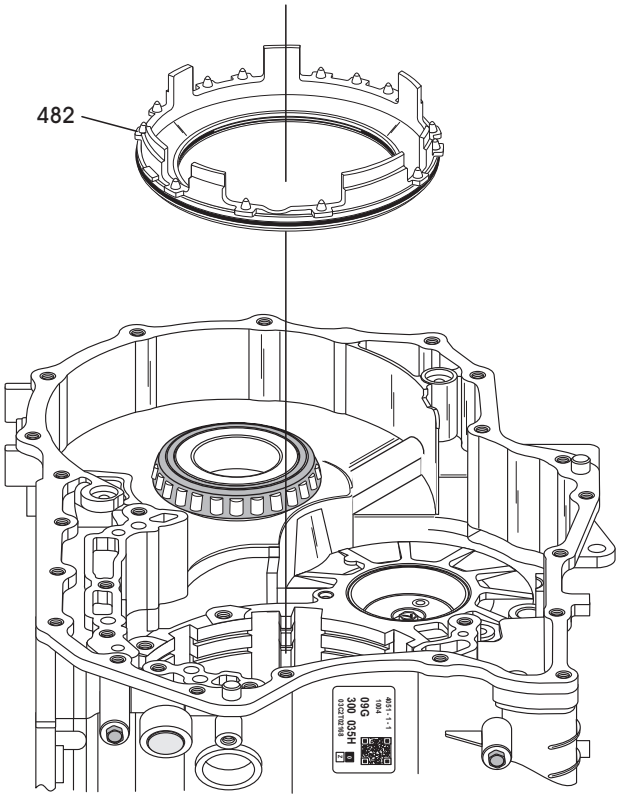

482 B2 CLUTCH APPLY PISTON.

Copyright © 2010 ATSG

Figure 87

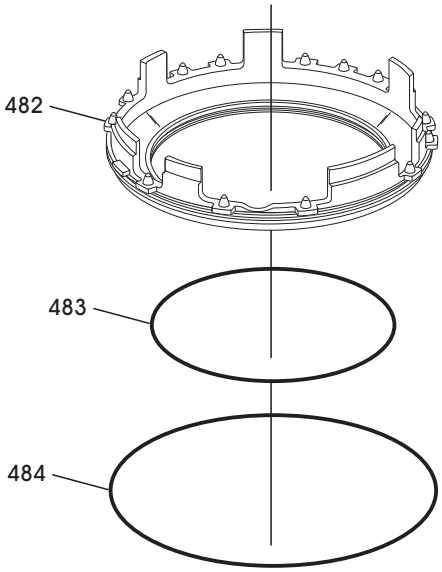

482 B2 CLUTCH APPLY PISTON.
483 B2 CLUTCH APPLY PISTON INNER "O" RING SEAL.
484 B2 CLUTCH APPLY PISTON OUTER "O" RING SEAL.

Copyright © 2010 ATSG

Figure 88

WWW.ALL-TRANS.BY

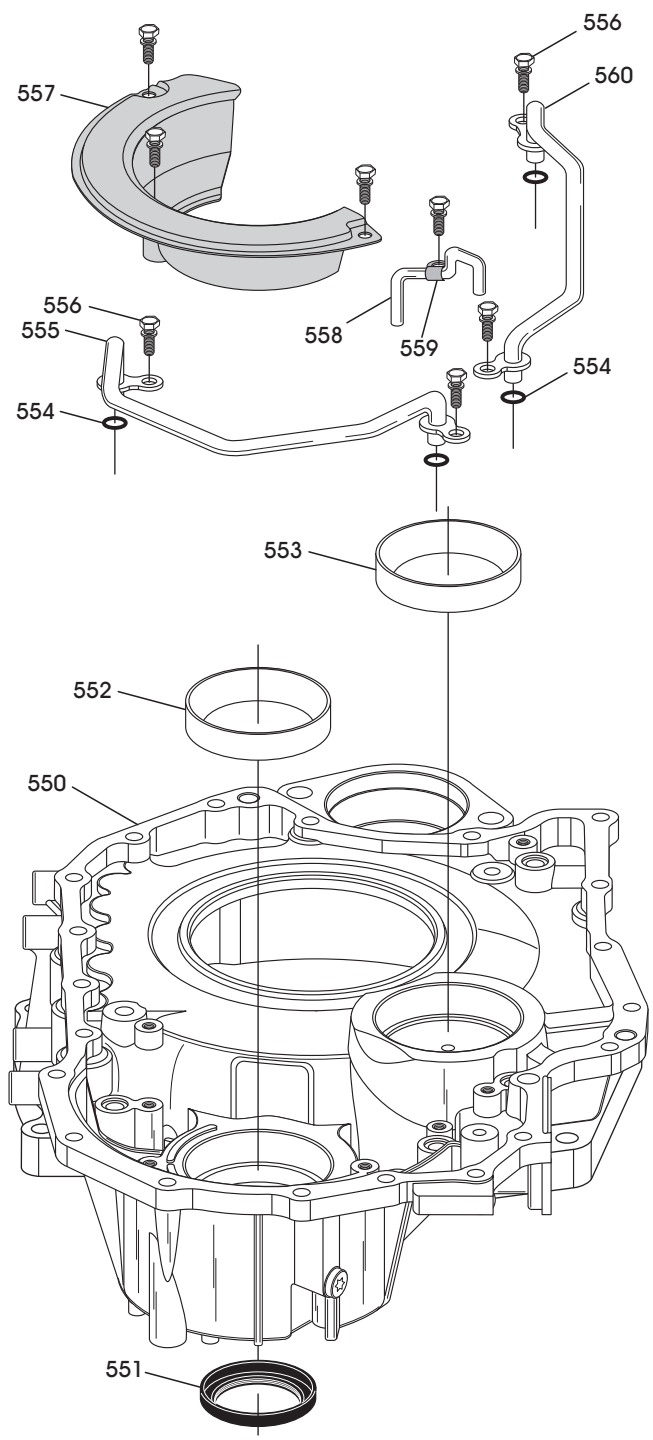

550 CONVERTER COVER ASSEMBLY.
551 RIGHT HAND AXLE SEAL.
552 TAPERED ROLLER BEARING RACE (FINAL DRIVE).
553 TAPERED ROLLER BEARING RACE (TRANSFER/PINION SHAFT).
554 OIL PIPE "O" RING SEALS (4 REQUIRED).
555 LOWER OIL PIPE ASSEMBLY.
556 RETAINING BOLTS WITH WASHER, 11MM LONG (8 REQUIRED).
557 FINAL DRIVE OIL BAFFLE.
558 CENTER OIL PIPE.
559 CENTER OIL PIPE RETAINING BRACKET.
560 UPPER OIL PIPE ASSEMBLY.

Copyright © 2010 ATSG

Figure 89

COMPONENT REBUILD

CONVERTER COVER ASSEMBLY

1. Disassemble the converter cover parts using Figure 89 as a guide.
2. Clean all converter cover parts thoroughly and dry with compressed air.
3. Inspect all converter cover parts thoroughly and replace as necessary.

WARNING: At time of this printing, there are not any new "hard parts" available from the manufacturer for this unit. The only source will be used aftermarket suppliers.

4. Install new "O" ring seals on the 2 large diameter oil pipes, as shown in Figure 89, and lube with a small amount of Trans-Jel®.
5. Install the two large diameter pipes, as shown in Figure 89,and torque the four retaining bolts to 8 N·m (70 in.lb.).
6. Install the center oil pipe by pressing into place, as shown in Figure 89, and torque the retaining bolt to 8 N·m (70 in.lb.).
7. Install the final drive oil baffle, as shown in Figure 89, and torque bolts to 8 N·m (70 in.lb.).
8. Install new right hand axle seal, as shown in Figure 89, using the proper seal driver.
9. Lube the inside diameter of the axle seal with a small amount of Trans-Jel.
10. Install new tapered roller bearing races as necessary.
11. Set the completed converter cover assembly aside for final transaxle assembly.

Component Rebuild
Continued on Page 63

WWW.ALL-TRANS.BY

COMPONENT REBUILD (CONT'D)

TRANSAXLE CASE ASSEMBLY

1. Clean all transaxle case parts thoroughly and dry with compressed air.
2. Inspect all case parts thoroughly and replace as necessary.

WARNING: At time of this printing, there are not any new "hard parts" available from the manufacturer for this unit. The only source will be used aftermarket suppliers.

3. Inspect the steel sleeve in the rear of case very closely, as shown in Figure 90.
   Note: This sleeve contains sealing rings for the K2 clutch and sleeve is prone to "spinning" on the case, creating cross-leaks.
   There is a replacement sleeve available from Sonnax® under part number 15759-01K with improved retention and includes installation instructions for 09G, 09K, 09M.
4. Install two new sealing rings into the grooves in the steel sleeve at rear of case (See Figure 90) and lube with small amount of Trans-Jel®.
5. Install tapered roller bearing and roller bearing race as necessary, as shown in Figure 91.
   Note: Shims under the tapered roller bearing and the roller bearing race are used to set the pre-load for final drive and transfer/pinion gear shaft, which should be 4 to 6 inch pounds of rotating torque.
6. Install new inner and outer "O" ring seals into B2 clutch piston grooves, as shown in Figure 92, and lube with small amount of Trans-Jel.

Continued on Page 64

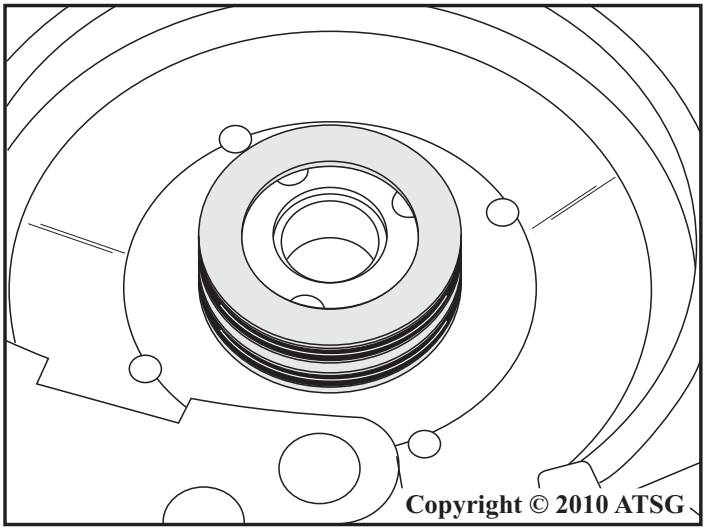

Figure 90

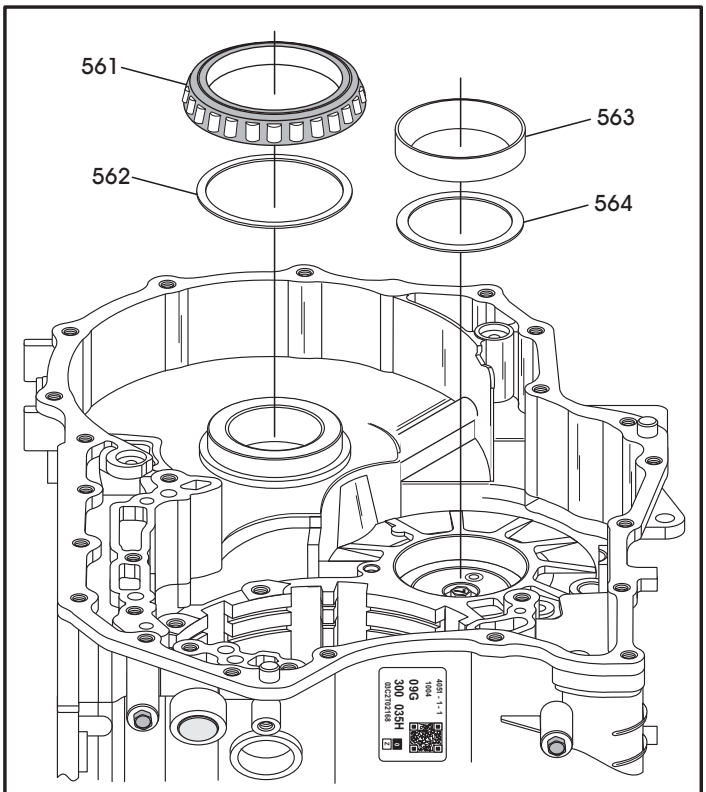

561 TAPERED ROLLER BEARING (FINAL DRIVE).
562 ROLLER BEARING SHIM (SETS FINAL DRIVE PRE-LOAD).
563 TAPERED ROLLER BEARING RACE (TRANSFER/PINION GEAR).
564 BEARING RACE SHIM (SETS TRANSFER/PINION PRE-LOAD).

Copyright © 2010 ATSG

Figure 91

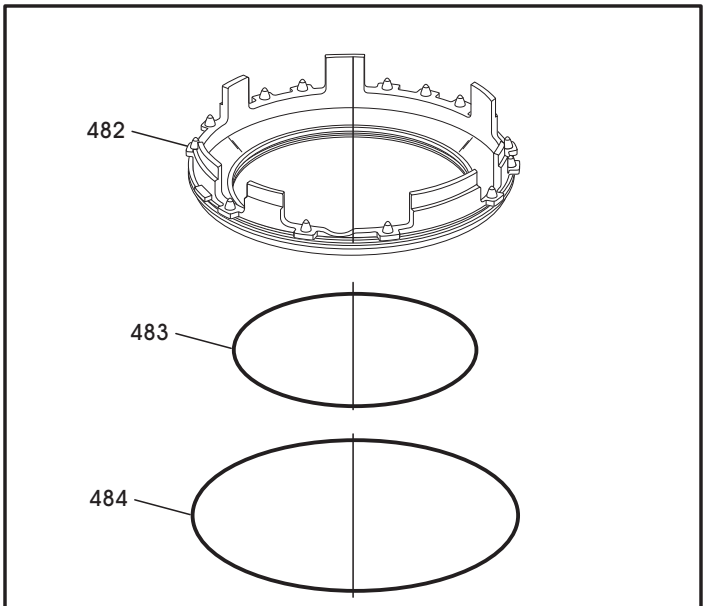

482 B2 CLUTCH APPLY PISTON.
483 B2 CLUTCH APPLY PISTON INNER "O" RING SEAL.
484 B2 CLUTCH APPLY PISTON OUTER "O" RING SEAL.

Copyright © 2010 ATSG

Figure 92

WWW.ALL-TRANS.BY

COMPONENT REBUILD (CONT'D)

TRANSAXLE CASE ASSEMBLY (CONT'D)

7. Lubricate the "O" ring seal surfaces of the case with a liberal amount of Trans-Jel®.
8. Install the B2 clutch apply piston into the case, as shown in Figure 93.
   Note: This piston must be oriented properly as it installs in one direction only. The piston tab without spring seal must be installed into slot as shown in Figure 93.
9. Use ***extra care*** installing this piston as the seal is ***easily damaged*** during the install process.
10. Install the B2 clutch return spring assembly, as shown in Figure 94.
    Note: The return spring assembly must also be oriented properly, as shown in Figure 94. Ensure that each of the springs are properly seated on the tabs and over the centering cones.
11. Compress the return spring and install the snap ring, as shown in Figure 94, and ensure it is fully seated in the case groove.
    Note: This snap ring is .048" thick and the opening goes toward the transfer gear.
12. Install the number 11 thrust bearing into rear of case, as shown in Figure 94, and retain with a small amount of Trans-Jel®.
    Note: Ensure tabs are engaged in case slots.
13. Set transaxle case aside for the final assembly process.

Component Rebuild
Continued on Page 65

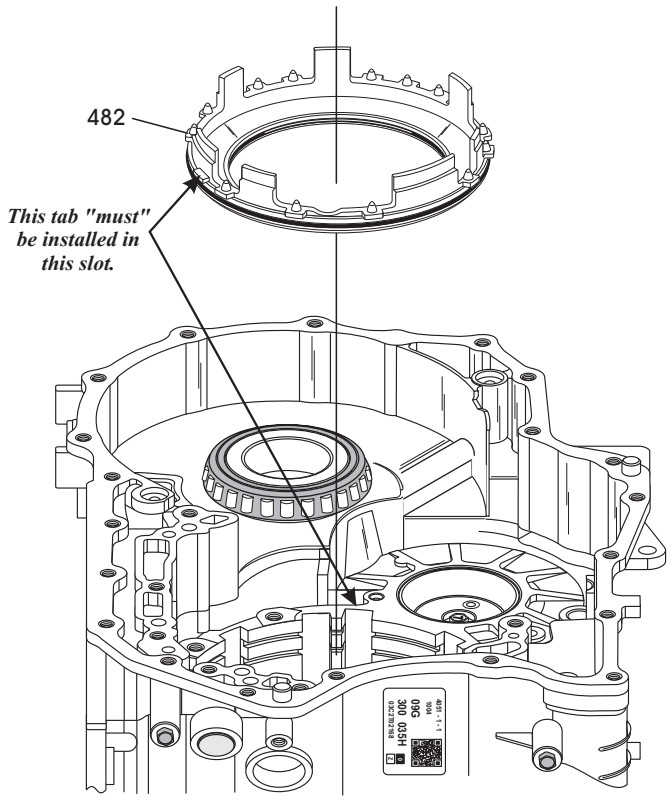

482 B2 CLUTCH APPLY PISTON.

Copyright © 2010 ATSG

Figure 93

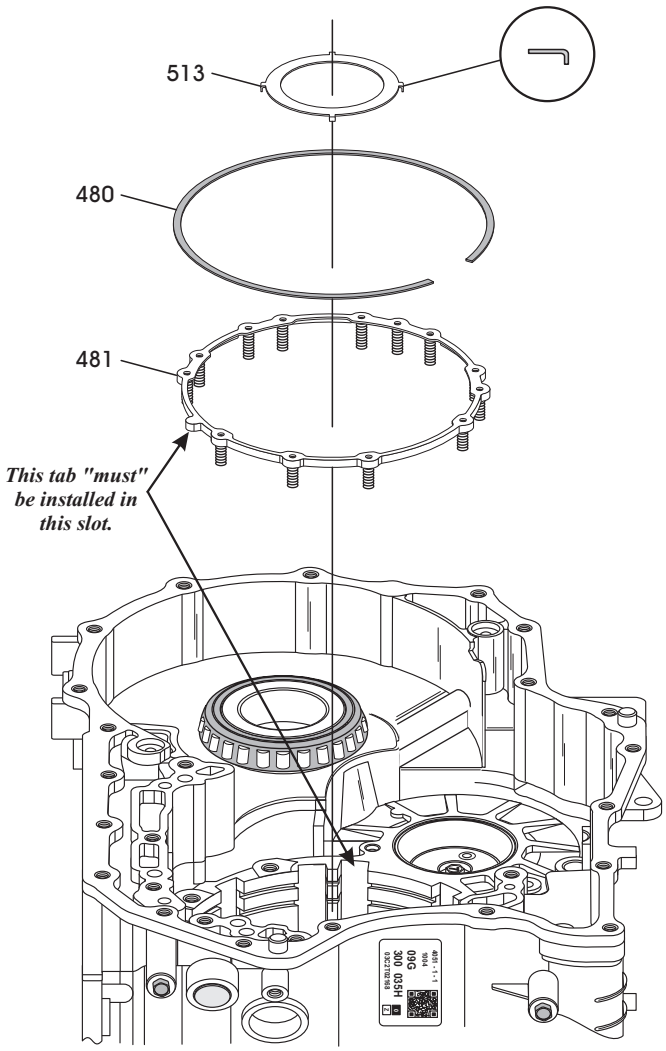

480 B2 CLUTCH RETURN SPRING SNAP RING (.048" THICKNESS).
481 B2 CLUTCH APPLY PISTON RETURN SPRING ASSEMBLY.
513 NUMBER 11 THRUST BEARING RACE.

Copyright © 2010 ATSG

Figure 94

WWW.ALL-TRANS.BY

COMPONENT REBUILD (CONT'D)

OIL PUMP ASSEMBLY

1. Disassemble the oil pump using Figure 95 as a guide.
2. Clean all oil pump assembly parts thoroughly and dry with compressed air.
3. Inspect all oil pump assembly parts thoroughly and replace as necessary.

WARNING: At time of this printing, there are not any new "hard parts" available from the manufacturer for this unit. The only source will be used aftermarket suppliers.

Continued on Page 66

OIL PUMP ASSEMBLY EXPLODED VIEW

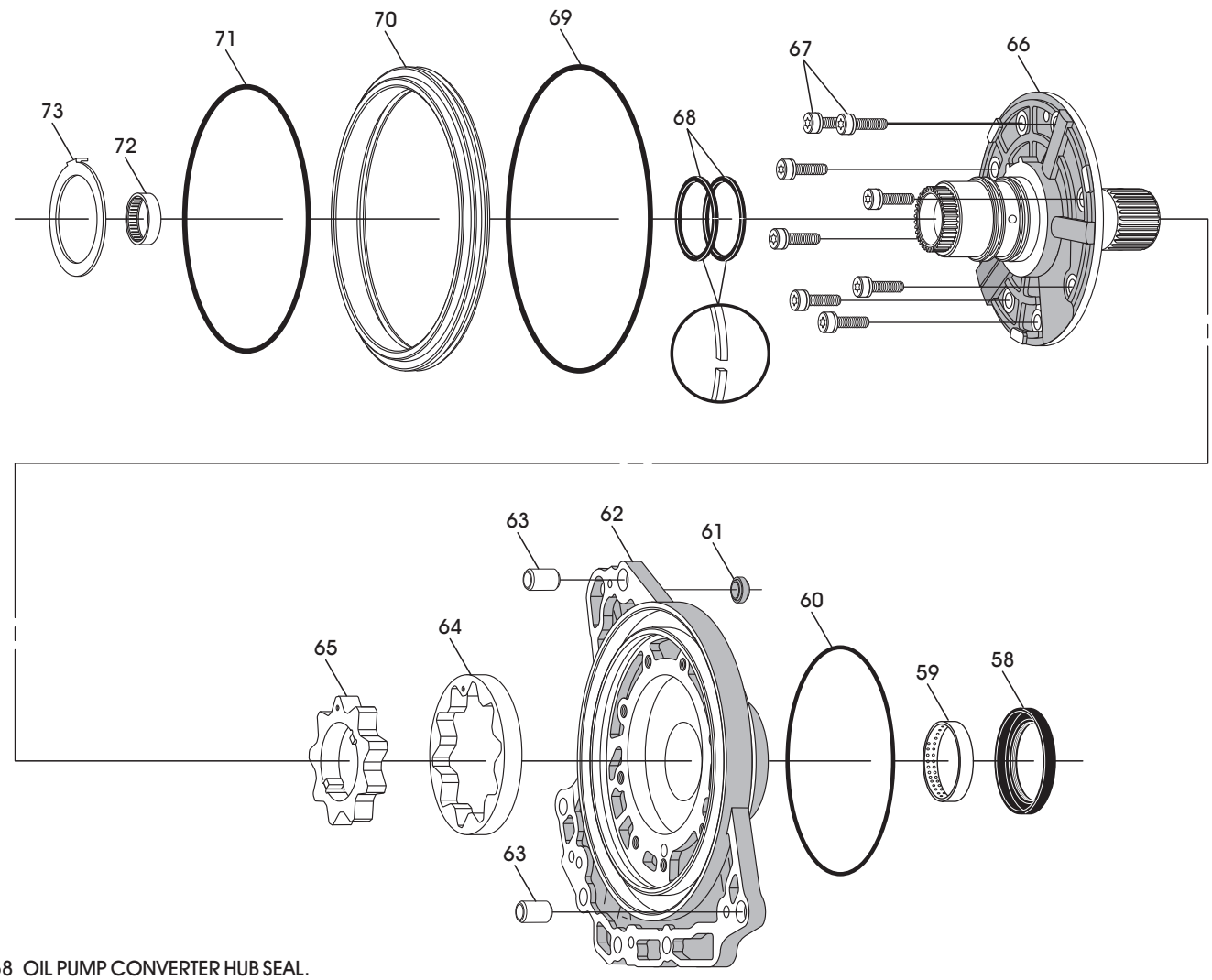

58 OIL PUMP CONVERTER HUB SEAL.
59 OIL PUMP CONVERTER HUB BUSHING.
60 OIL PUMP TO CONVERTER COVER "O" RING SEAL .
61 OIL PUMP TO CONVERTER COVER SEAL .
62 OIL PUMP BODY.
63 OIL PUMP HOLLOW ALIGNMENT DOWELS (2 REQUIRED).
64 OIL PUMP OUTER GEAR, GEROTOR STYLE.
65 OIL PUMP INNER GEAR, GEROTOR STYLE.
66 OIL PUMP COVER AND STATOR SHAFT ASSEMBLY.
67 PUMP COVER RETAINING BOLTS & WASHERS (8 REQUIRED).
68 OIL PUMP COVER, BUTT-CUT, SEAL RINGS (2 REQUIRED).
69 B-1 CLUTCH PISTON OUTER "O" RING SEAL.
70 B-1 CLUTCH PISTON.
71 B-1 CLUTCH PISTON INNER "O" RING SEAL.
72 OIL PUMP COVER CAGED NEEDLE BEARING.
73 NUMBER 1 THRUST WASHER.

Copyright © 2010 ATSG

Figure 95

WWW.ALL-TRANS.BY

COMPONENT REBUILD (CONT'D)

OIL PUMP ASSEMBLY (CONT'D)

4. Install new "O" ring seals into the grooves on B1 clutch apply piston, as shown in Figure 96, and lube with small amount of Trans-Jel®.
5. Install new pump body to converter housing "O" ring seal, as shown in Figure 97, and lube with small amount of Trans-Jel®.
6. Install new pump body bushing as necessary using the proper driver (See Figure 97).
7. Install new converter hub seal into pump body, as shown in Figure 97, using proper driver.
8. Install new pump body to converter cover seal (61), as shown in Figure 97, and retain with a small amount of Trans-Jel®.
   Note: This step can wait until you have the oil pump installed on transaxle, if you wish.
9. Inspect the caged needle bearing in the pump cover, as shown in Figure 98.
   Note: This bearing is not serviced and pump cover will require replacement if damaged.

Continued on Page 67

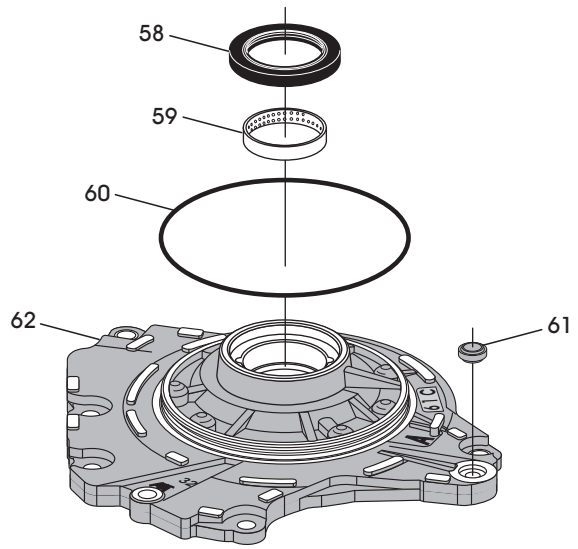

58 OIL PUMP CONVERTER HUB SEAL.
59 OIL PUMP CONVERTER HUB BUSHING.
60 OIL PUMP TO CONVERTER COVER "O" RING SEAL.
61 OIL PUMP TO CONVERTER COVER SEAL ASSEMBLY.
62 OIL PUMP BODY.

Copyright © 2010 ATSG

Figure 97

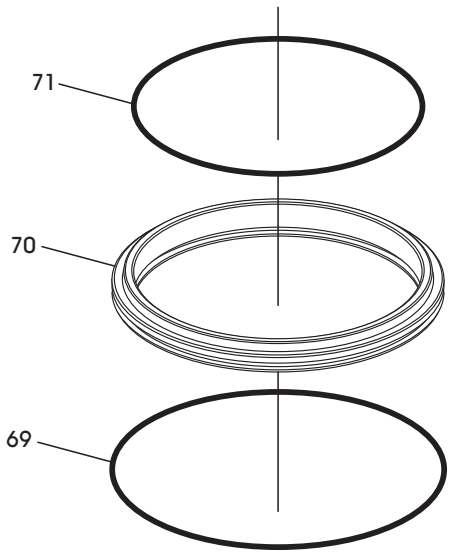

69 B1 CLUTCH APPLY PISTON OUTER "O" RING SEAL.
70 B1 CLUTCH APPLY PISTON.
71 B1 CLUTCH APPLY PISTON INNER "O" RING SEAL.

Copyright © 2010 ATSG

Figure 96

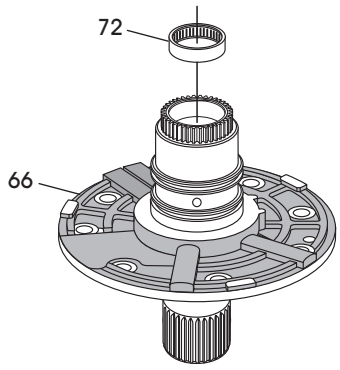

66 OIL PUMP COVER AND STATOR SHAFT ASSEMBLY.
72 OIL PUMP COVER CAGED NEEDLE BEARING.

Copyright © 2010 ATSG

Figure 98

WWW.ALL-TRANS.BY

COMPONENT REBUILD (CONT'D)

OIL PUMP ASSEMBLY (CONT'D)

10. Install the oil pump body alignment dowels, as shown in Figure 99, if removed.
11. Install the oil pump inner and outer gears into the pump body, as shown in Figure 99, with the "dots" facing up.
12. Lubricate the gears with small amount proper transaxle fluid.
13. Measure the gear to face clearance on both the inner and outer gears using a feeler gage or a depth micrometer, as shown in Figure 100. ***Note: Oil Pump Specifications are also shown in Figure 100.***
14. Install the oil pump cover into the oil pump body, as shown in Figure 101, and install the eight bolts and washers.

Continued on Page 68

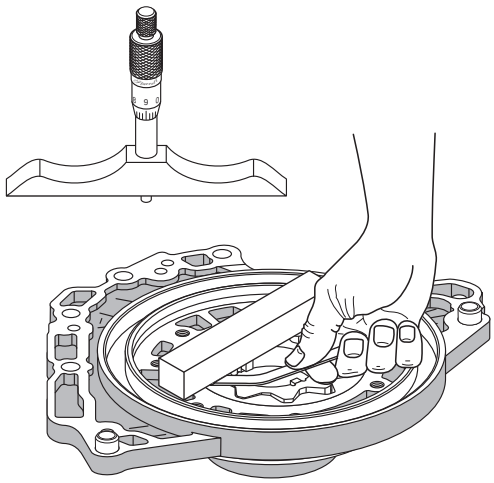

Oil Pump Specifications

COMPONENT	*SPECIFICATION*
INNER GEAR TO FACE	.0008" - .0015"
OUTER GEAR TO FACE	.0008" - .002"
OUTER GEAR TO BODY	.003" - .005"

Figure 100

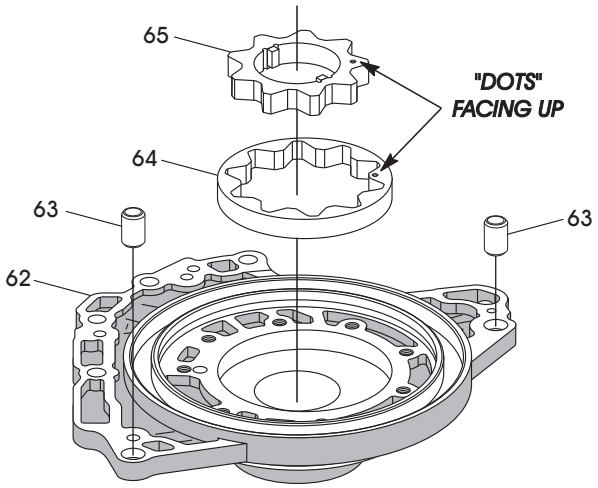

62 OIL PUMP BODY.
63 OIL PUMP HOLLOW ALIGNMENT DOWELS (2 REQUIRED).
64 OIL PUMP OUTER GEAR, GEROTOR STYLE.
65 OIL PUMP INNER GEAR, GEROTOR STYLE.

Copyright © 2010 ATSG

Figure 99

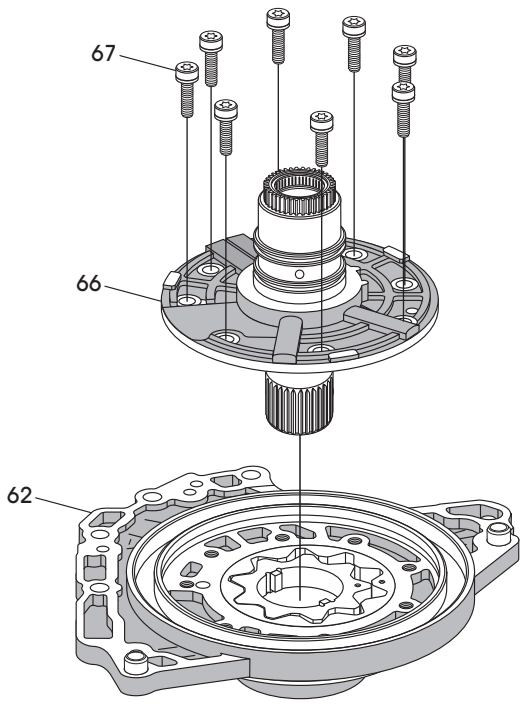

62 OIL PUMP BODY.
66 OIL PUMP COVER AND STATOR SHAFT ASSEMBLY.
67 PUMP COVER RETAINING BOLTS & WASHERS (8 REQUIRED).

Copyright © 2010 ATSG

Figure 101

WWW.ALL-TRANS.BY

COMPONENT REBUILD (CONT'D)
OIL PUMP ASSEMBLY (CONT'D)

15. Torque the eight oil pump cover to pump body bolts down to 11 N·m (97 in.lb.), as shown in Figure 102, using a criss-cross pattern.
16. Lubricate the "O" ring seal surfaces in the oil pump cover with small amount of Trans-Jel®.
17. Install the B1 clutch apply piston into the oil pump cover, as shown in Figure 103.
18. Install the number 1 thrust washer onto back of pump cover, as shown in Figure 104, and retain with small amount of Trans-Jel®. ***Note: This thrust washer is included in the Trans-Tec® gasket pack.***
19. Install two new sealing rings into grooves of the pump cover, as shown in Figure 104, and ensure butt ends meet.
20. Lubricate seal rings with transaxle fluid and set completed oil pump aside for final assembly, as shown in Figure 105.

Component Rebuild Continued on Page 69

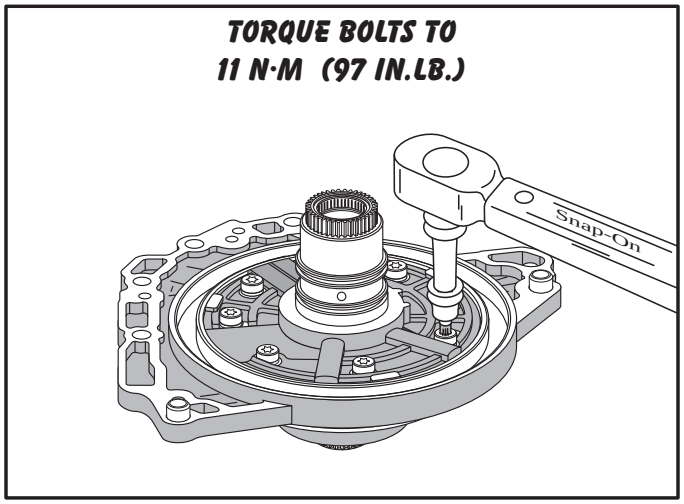

Figure 102

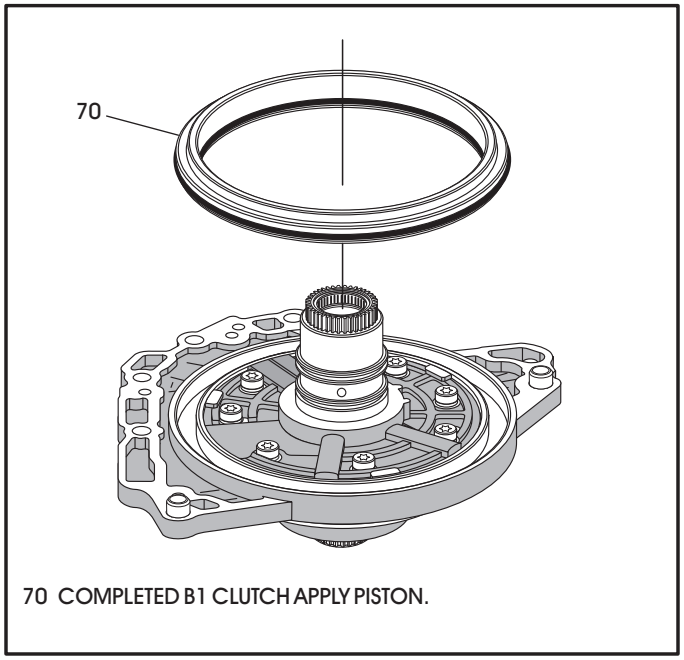

Figure 103

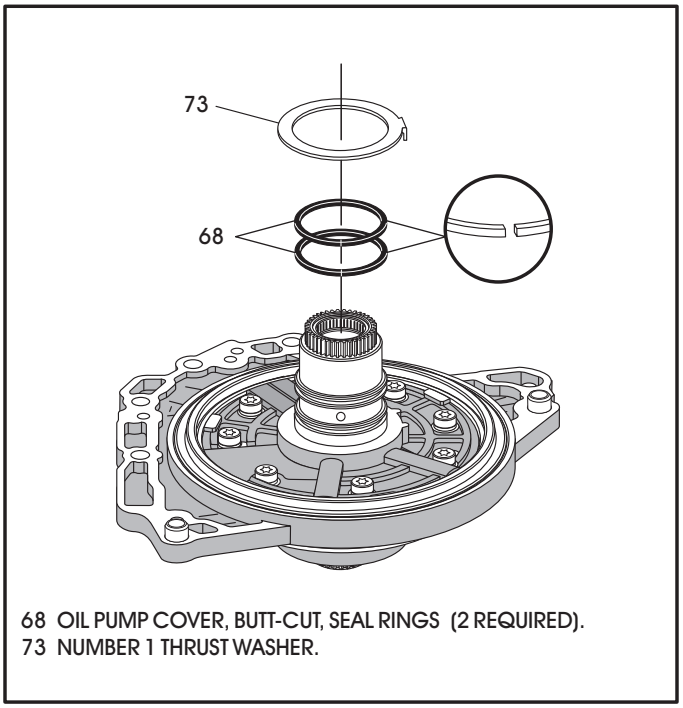

Figure 104

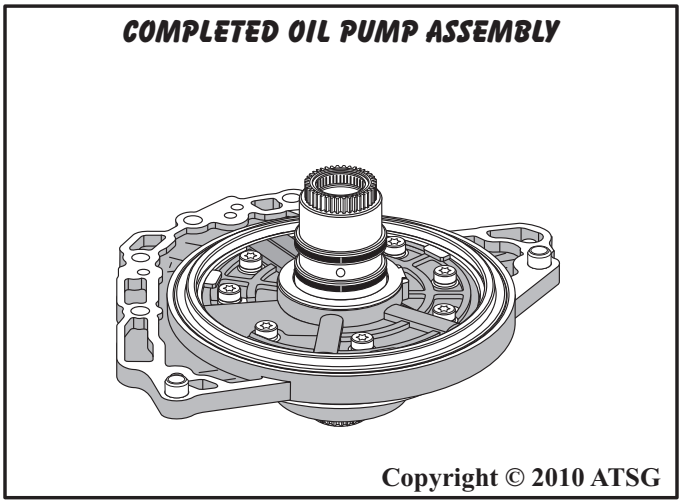

Copyright © 2010 ATSG

Figure 105

WWW.ALL-TRANS.BY

COMPONENT REBUILD (CONT'D)

K3 CLUTCH HOUSING ASSEMBLY

1. Disassemble the K3 clutch housing assembly using Figure 106 as a guide.
2. Clean all K3 clutch housing parts thoroughly and dry with compressed air.
3. Inspect all K3 clutch housing parts thoroughly for wear and/or damage, replace as necessary.

WARNING: At time of this printing, there are not any new "hard parts" available from the manufacturer for this unit. The only source will be used aftermarket suppliers.

Continued on Page 70

K3 CLUTCH EXPLODED VIEW

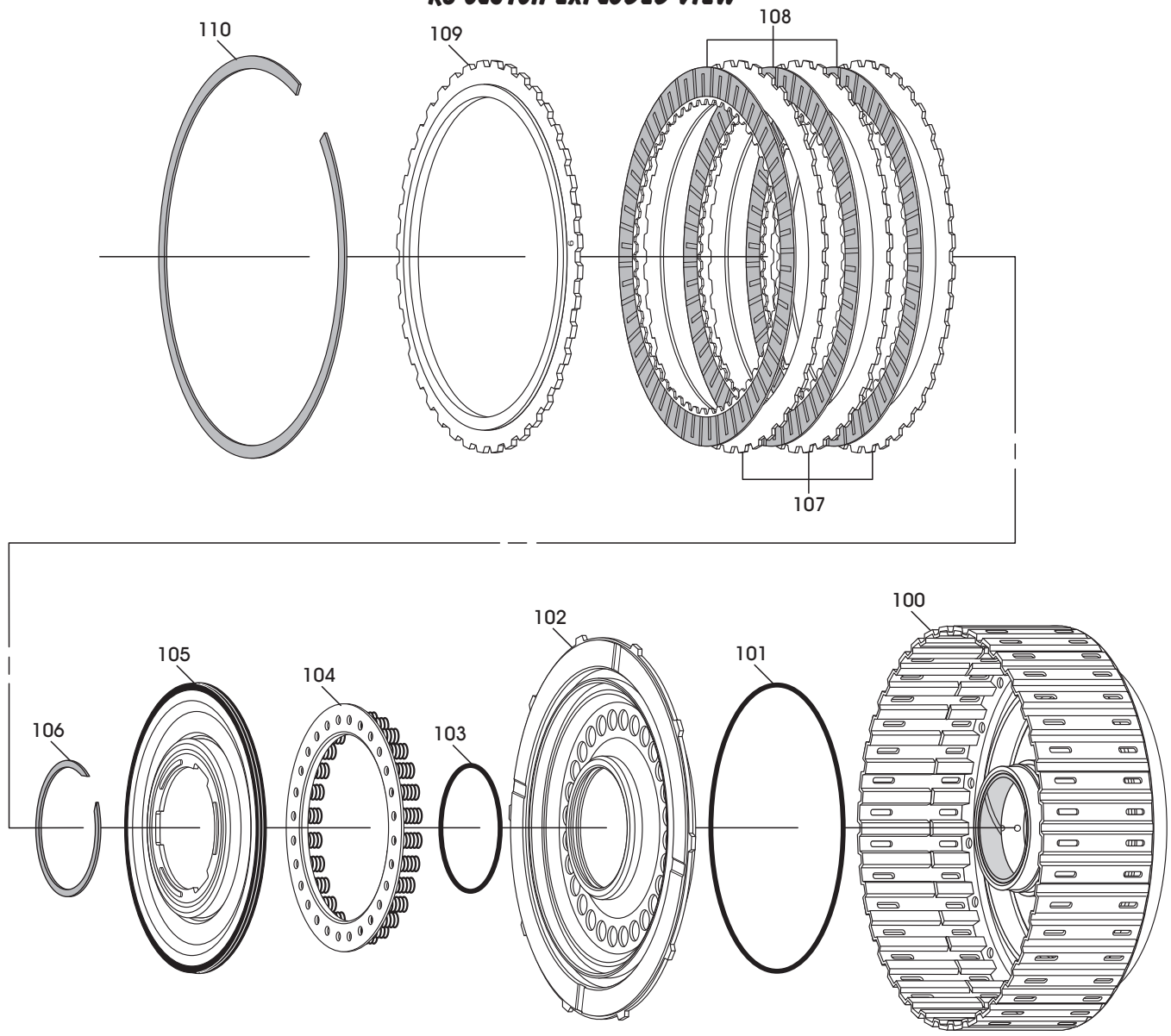

100 K3 CLUTCH HOUSING ASSEMBLY.
101 K3 CLUTCH PISTON OUTER "O" RING SEAL.
102 K3 CLUTCH APPLY PISTON.
103 K3 CLUTCH PISTON INNER "O" RING SEAL.
104 K3 CLUTCH PISTON RETURN SPRING ASSEMBLY.
105 K3 CLUTCH BALANCE PISTON.
106 K3 CLUTCH BALANCE PISTON SNAP RING.
107 K3 CLUTCH STEEL PLATES.
108 K3 CLUTCH FRICTION PLATES.
109 K3 CLUTCH BACKING PLATE.
110 K3 CLUTCH BACKING PLATE SNAP RING (.064" THICK).

Copyright © 2010 ATSG

Figure 106

WWW.ALL-TRANS.BY

COMPONENT REBUILD (CONT'D)
K3 CLUTCH HOUSING ASSEMBLY (CONT'D)

4. Install new inner and outer "O" ring seals in the grooves of the K3 clutch apply piston, as shown in Figure 107.
5. Lubricate both seals with a small amount of Trans-Jel® and install K3 clutch apply piston into K3 housing, as shown in Figure 108.
6. Install the return spring assembly into the K3 clutch housing, as shown in Figure 108.
   Note: Ensure springs are seated in cavitys of the piston (See Figure 108).
7. Lube the balance piston seal with small amount of Trans-Jel® and install the balance piston, as shown in Figure 108.
8. Compress the balance piston and install the snap ring, as shown in Figure 108.

Continued on Page 71

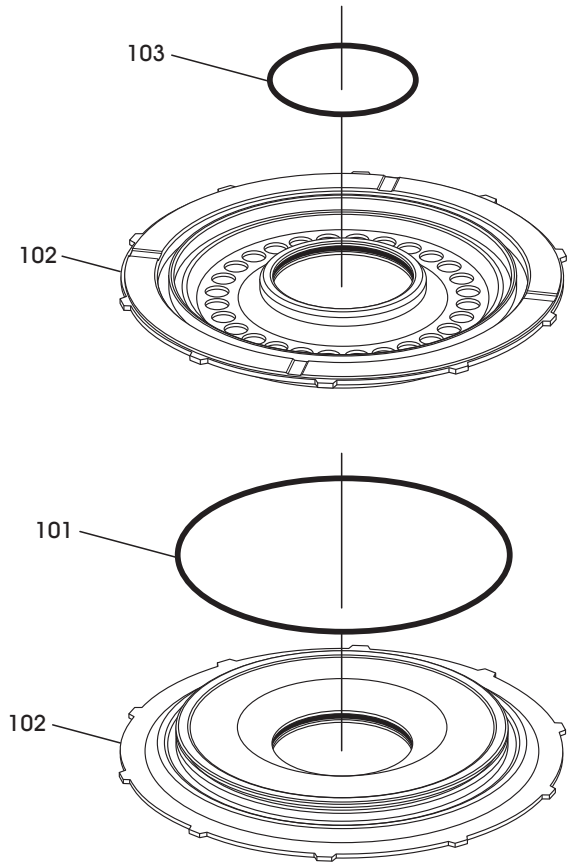

101 K3 CLUTCH PISTON OUTER "O" RING SEAL.
102 K3 CLUTCH APPLY PISTON.
103 K3 CLUTCH PISTON INNER "O" RING SEAL.

Copyright © 2010 ATSG

Figure 107

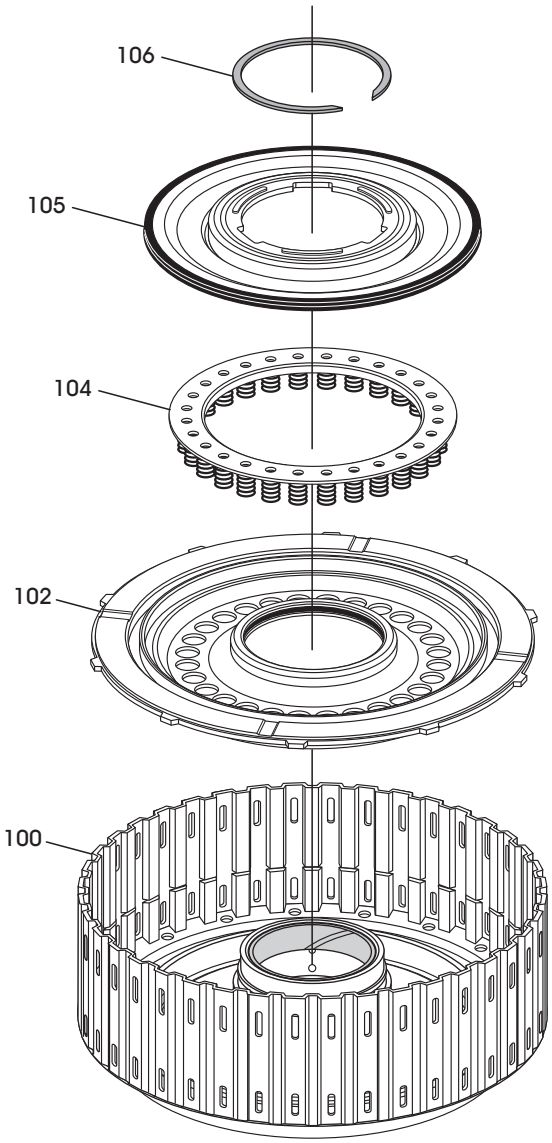

100 K3 CLUTCH HOUSING ASSEMBLY.
102 K3 CLUTCH APPLY PISTON WITH "O" RING SEALS.
104 K3 CLUTCH PISTON RETURN SPRING ASSEMBLY.
105 K3 CLUTCH BALANCE PISTON.
106 K3 CLUTCH BALANCE PISTON SNAP RING.

Copyright © 2010 ATSG

Figure 108

WWW.ALL-TRANS.BY

K3 CLUTCH HOUSING ASSEMBLY (CONT'D)

9. Install K3 clutch pack beginning with a steel plate and alternating with frictions, as shown in Figure 109, until you have installed the proper quantity, as the quantity may vary.
   Note: All friction plates should be soaked in proper fluid for 30 minutes before installing.

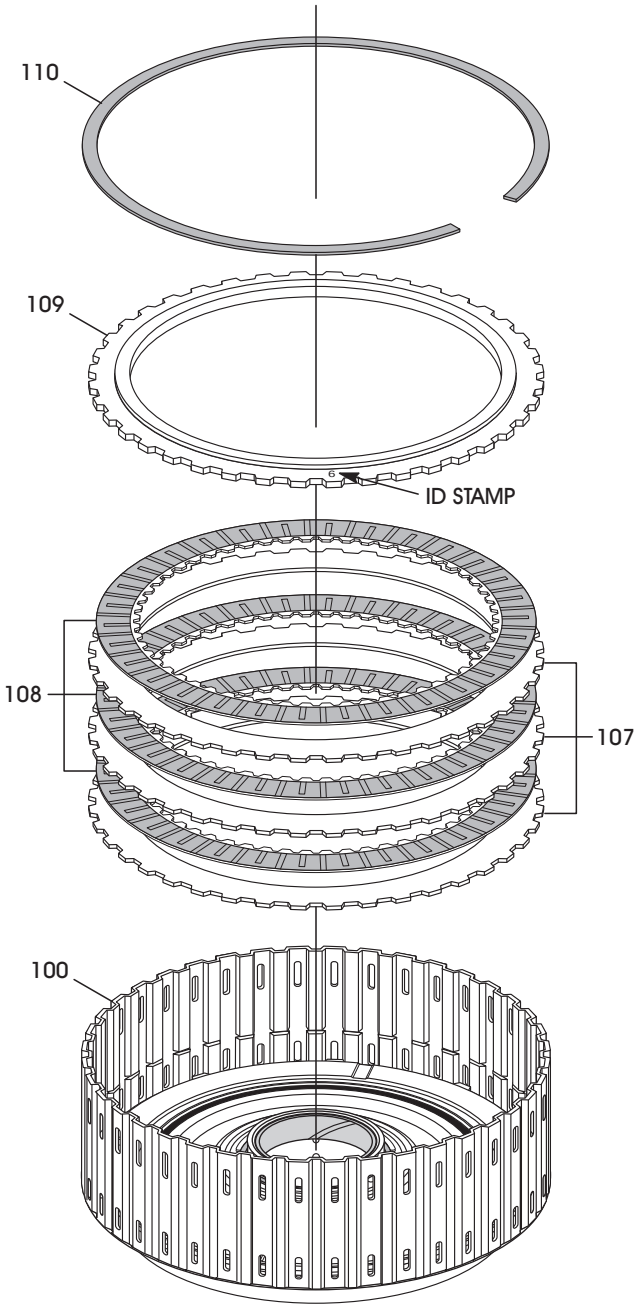

100 K3 CLUTCH HOUSING ASSEMBLY.
107 K3 CLUTCH STEEL PLATES (QUANTITY MAY VARY).
108 K3 CLUTCH FRICTION PLATES (QUANTITY MAY VARY).
109 K3 CLUTCH BACKING PLATE.
110 K3 CLUTCH BACKING PLATE SNAP RING (.064" THICK).

Copyright © 2010 ATSG

Figure 109

10. Install the K3 clutch backing plate on top of the last friction, as shown in Figure 109, with step side facing up.
    Note: Notice the number stamped on top side of backing plate, which is an indicator that it is selective, but no selectives available as yet.
11. Install the K3 clutch backing plate snap ring, as shown in Figure 109.
    Note: This snap ring is .064" thick.
12. Measure the K3 clutch clearance with a feeler gauge between the backing plate and friction plate, as shown in Figure 110.
    Note: There are no factory clutch clearance specifications available, but the clearances were the "traditional" .010" per friction plate through-out this unit. Refer to Figure 110 for K3 clutch clearance with 3 frictions.
13. Set the completed K3 clutch housing assembly aside for the final assembly process.

Component Rebuild
Continued on Page 72

Factory K3 Clutch Clearance
Was 0.66 MM (.026")
With 3 Frictions

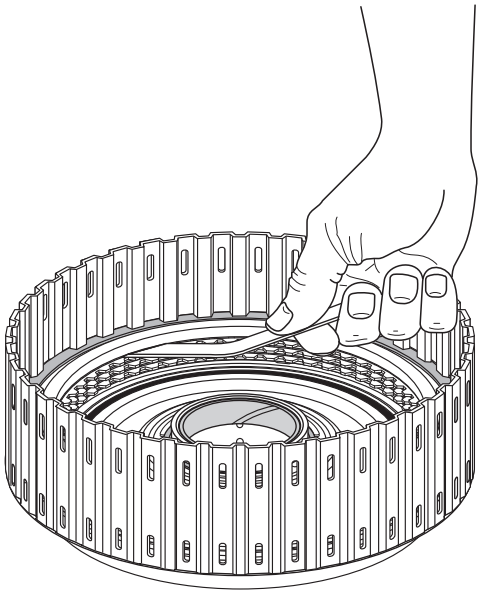

Copyright © 2010 ATSG

Figure 110

WWW.ALL-TRANS.BY

COMPONENT REBUILD (CONT'D)

K1 CLUTCH HOUSING ASSEMBLY

1. Disassemble the K1 clutch housing assembly using Figure 111 as a guide.
2. Clean all K1 clutch housing parts thoroughly and dry with compressed air.
3. Inspect all K1 clutch housing parts thoroughly for wear and/or damage, replace as necessary.

WARNING: At time of this printing, there are not any new "hard parts" available from the manufacturer for this unit. The only source will be used aftermarket suppliers.

Continued on Page 73

K1 CLUTCH HOUSING AND RELATED PARTS, EXPLODED VIEW

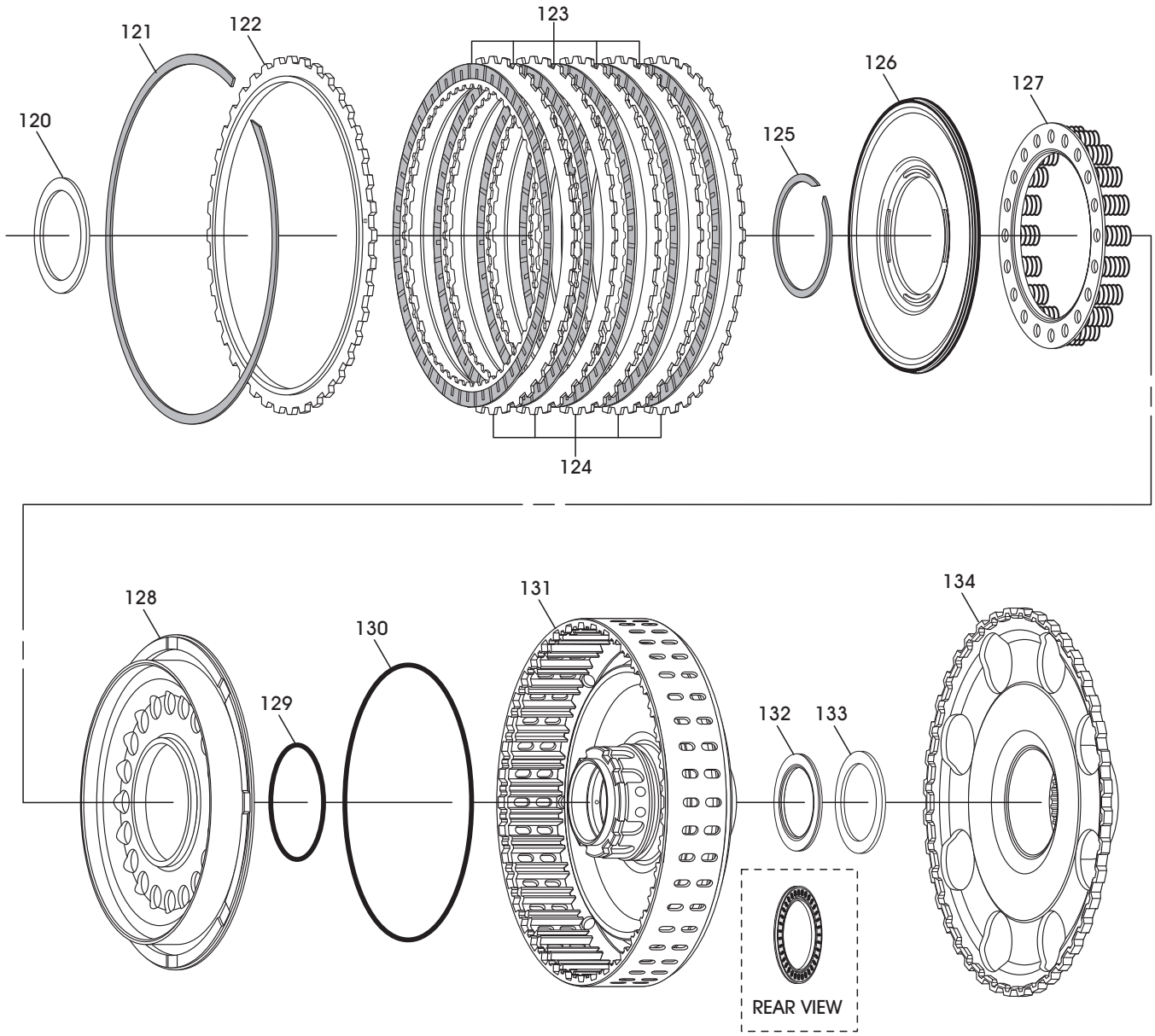

120 NUMBER 5 THRUST BEARING RACE.
121 K1 CLUTCH BACKING PLATE SNAP RING, 1.62MM (.064") THICK.
122 K1 CLUTCH BACKING PLATE.
123 K1 CLUTCH FRICTION PLATES (QUANTITY WILL VARY).
124 K1 CLUTCH STEEL PLATES (QUANTITY WILL VARY).
125 K1 CLUTCH BALANCE PISTON SNAP RING.
126 K1 CLUTCH BALANCE PISTON.
127 K1 CLUTCH APPLY PISTON RETURN SPRING ASSEMBLY.
128 K1 CLUTCH APPLY PISTON.
129 K1 CLUTCH INNER "O" RING SEAL.
130 K1 CLUTCH OUTER "O" RING SEAL.
131 K1 CLUTCH HOUSING ASSEMBLY.
132 NUMBER 6 THRUST BEARING.
133 NUMBER 6 THRUST BEARING RACE.
134 K3 CLUTCH HOUSING DRIVE HUB.

Copyright © 2010 ATSG

Figure 111

WWW.ALL-TRANS.BY

COMPONENT REBUILD (CONT'D)
K1 CLUTCH HOUSING ASSEMBLY (CONT'D)

4. Install the number 6 thrust bearing race into the K3 clutch housing drive hub, as shown in Figure 112.
5. Install the number 6 thrust bearing into the K3 clutch housing drive hub with needles facing down, as shown in Figure 112.
6. Set the completed K3 clutch housing drive hub assembly aside for the minute.

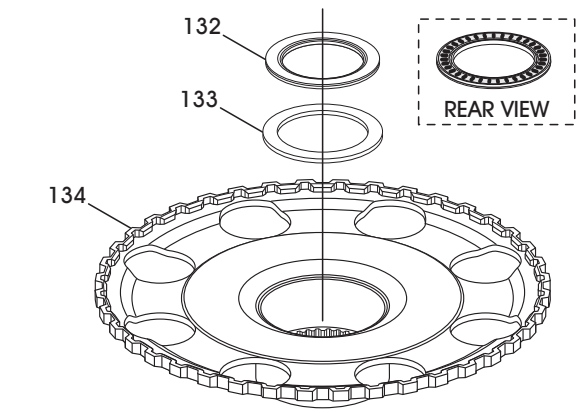

132 NUMBER 6 THRUST BEARING.
133 NUMBER 6 THRUST BEARING RACE.
134 K3 CLUTCH HOUSING DRIVE HUB.

Copyright © 2010 ATSG

Figure 112

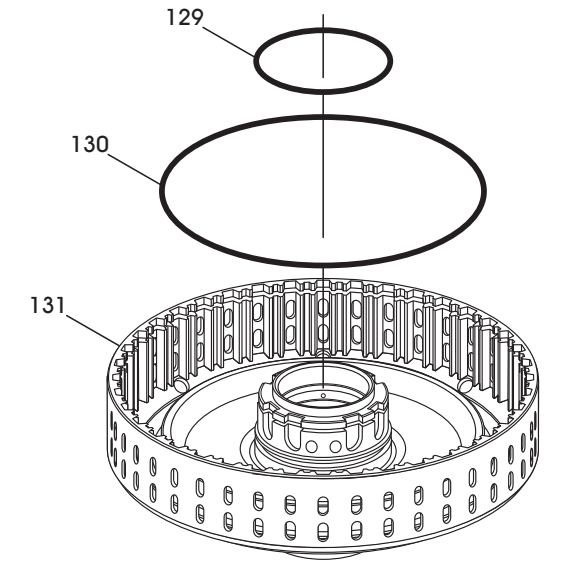

129 K1 CLUTCH INNER "O" RING SEAL.
130 K1 CLUTCH OUTER "O" RING SEAL.
131 K1 CLUTCH HOUSING ASSEMBLY.

Copyright © 2010 ATSG

Figure 113

7. Install K1 clutch apply piston inner and outer "O" ring seals into the grooves in K1 clutch housing, as shown in Figure 113, and lube with a small amount of Trans-Jel®.
8. The K1 clutch apply piston is inclined to rotate in, and damage the K1 clutch housing.
   Note: There has been a new K1 clutch apply piston developed by "DB Automobile" that eliminates the rotation of the piston and saves the damaged K1 clutch housing.
   The new design K1 clutch housing piston is shown in Figure 114, and is available from your after-market supplier.

Continued on Page 74

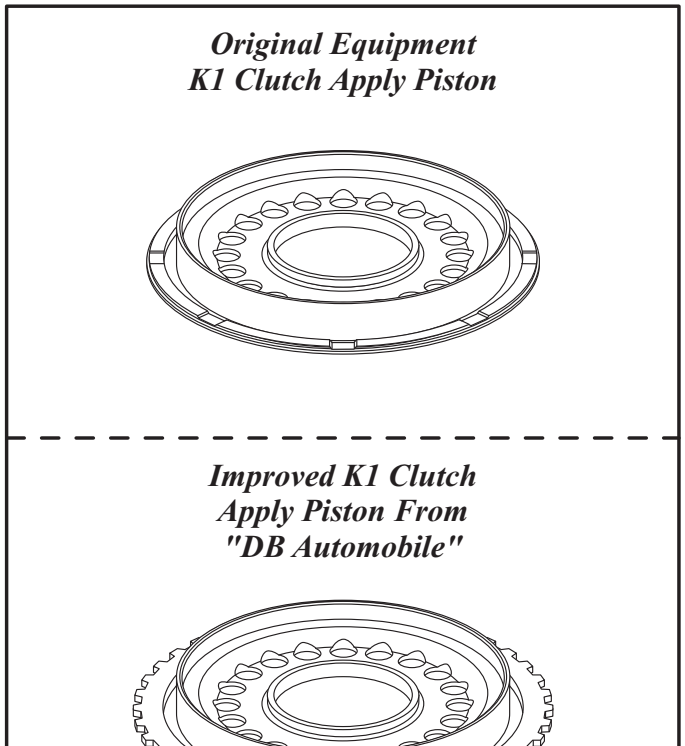

Copyright © 2010 ATSG

Figure 114

WWW.ALL-TRANS.BY

COMPONENT REBUILD (CONT'D)
K1 CLUTCH HOUSING ASSEMBLY (CONT'D)

9. Lubricate the seal surfaces of K1 clutch apply piston and install the piston into K1 clutch housing, as shown in Figure 115
10. Install the K1 clutch apply piston return spring, as shown in Figure 115, and ensure springs are engaged in apply piston spring pockets.
11. Lube the balance piston seal and install piston, as shown in Figure 115.
12. Compress the balance piston and install the snap ring, as shown in Figure 115.
13. Install K1 clutch pack beginning with a steel plate and alternating with frictions, as shown in Figure 116, until you have installed the proper quantity, as the quantity may vary.
Note: All friction plates should be soaked in proper fluid for 30 minutes before installing.

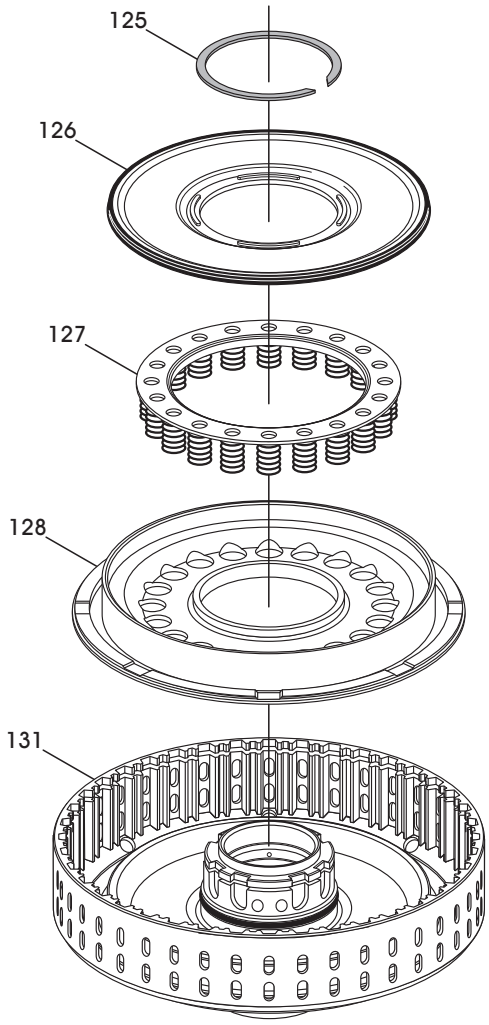

125 K1 CLUTCH BALANCE PISTON SNAP RING.
126 K1 CLUTCH BALANCE PISTON.
127 K1 CLUTCH APPLY PISTON RETURN SPRING ASSEMBLY.
128 K1 CLUTCH APPLY PISTON.
131 K1 CLUTCH HOUSING ASSEMBLY.

Copyright © 2010 ATSG

Figure 115

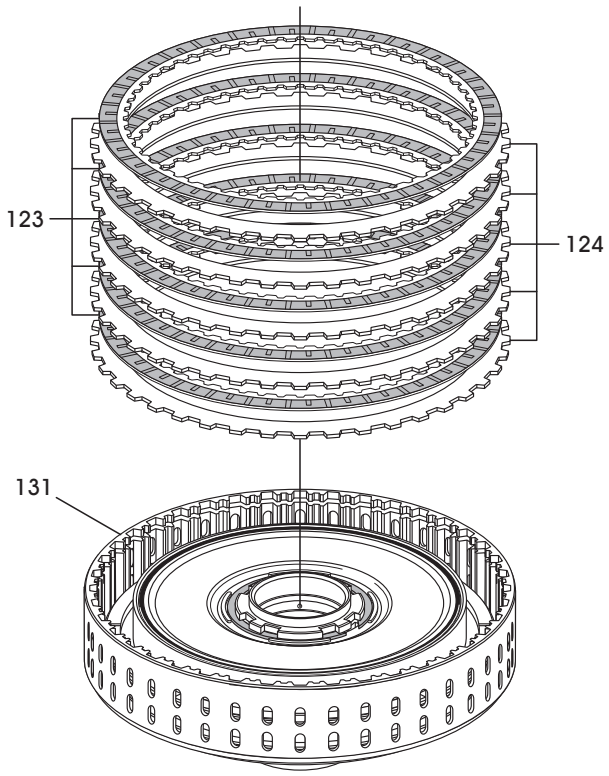

123 K1 CLUTCH FRICTION PLATES (QUANTITY MAY VARY).
124 K1 CLUTCH STEEL PLATES (QUANTITY MAY VARY).
131 K1 CLUTCH HOUSING ASSEMBLY.

Copyright © 2010 ATSG

Figure 116

WWW.ALL-TRANS.BY

COMPONENT REBUILD (CONT'D)
K1 CLUTCH HOUSING ASSEMBLY (CONT'D)

14. Install the K1 clutch backing plate on top of the last friction, as shown in Figure 117, with step side facing up.
    Note: Notice the number stamped on top side of backing plate, which is an indicator that it is selective, but as yet, no selectives available.
15. Install the K1 clutch backing plate snap ring, as shown in Figure 117.
    Note: This snap ring is .064" thick.
16. Measure the K1 clutch clearance with a feeler gauge between the backing plate and friction plate, as shown in Figure 118.
    Note: There are no factory clutch clearance specifications available, but the clearances were the "traditional" .010" per friction plate through-out this unit. Refer to Figure 118 for K1 clutch clearance with 5 frictions.
17. Install number 5 thrust bearing race on the hub of K1 clutch housing, as shown in Figure 117, and retain with Trans-Jel®.
18. Install completed K1 clutch housing into the completed K3 clutch housing drive hub, as shown in Figure 119 and set aside for the final assembly process.

Component Rebuild
Continued on Page 76

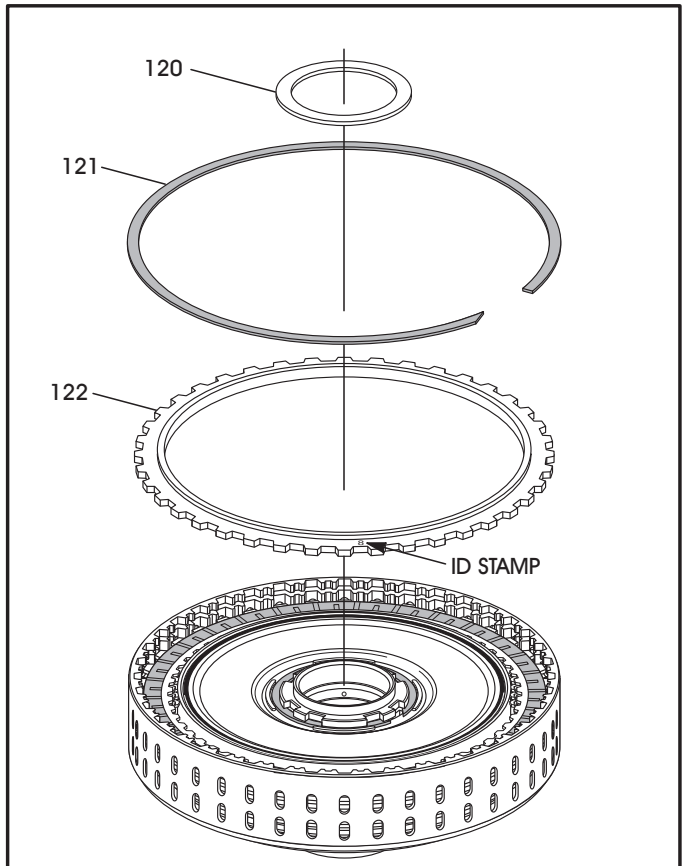

120 NUMBER 5 THRUST BEARING RACE.
121 K1 CLUTCH BACKING PLATE SNAP RING, 1.62MM (.064") THICK.
122 K1 CLUTCH BACKING PLATE.

Copyright © 2010 ATSG

Figure 117

Factory K1 Clutch Clearance Was 1.42 MM (.056") With 5 Frictions

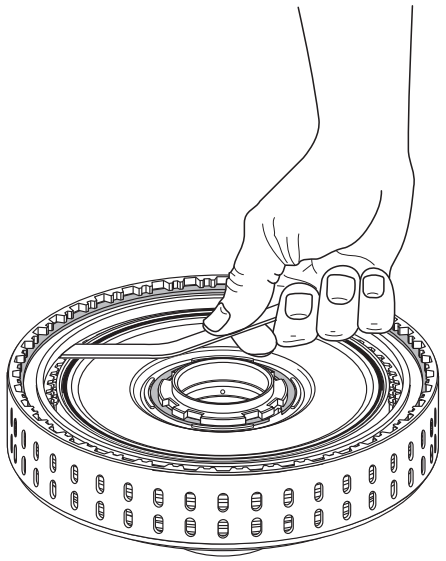

Copyright © 2010 ATSG

Figure 118

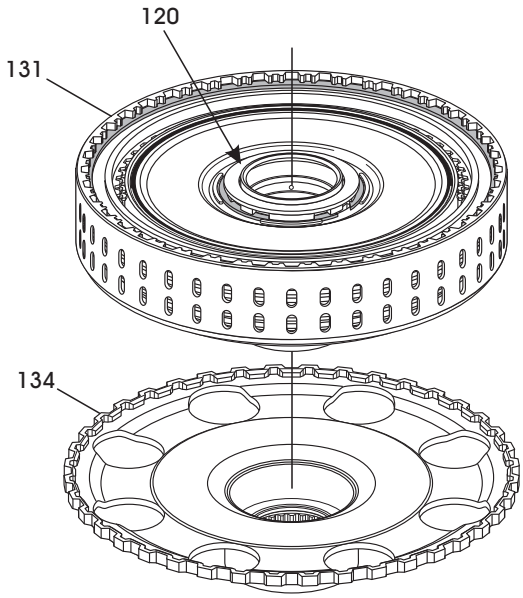

120 NUMBER 5 THRUST BEARING RACE.
131 COMPLETED K1 CLUTCH HOUSING.
134 COMPLETED K3 CLUTCH HOUSING DRIVE HUB.

Copyright © 2010 ATSG

Figure 119

WWW.ALL-TRANS.BY

COMPONENT REBUILD (CONT'D)

K2 CLUTCH HOUSING ASSEMBLY

1. Disassemble the K2 clutch housing assembly using Figure 120 as a guide.
2. Clean all K2 clutch housing parts thoroughly and dry with compressed air.
3. Inspect all K2 clutch housing parts thoroughly for wear and/or damage, replace as necessary.

WARNING: At time of this printing, there are not any new "hard parts" available from the manufacturer for this unit. The only source will be used aftermarket suppliers.

Continued on Page 77

K2 CLUTCH AND ASSOCIATED PARTS, EXPLODED VIEW

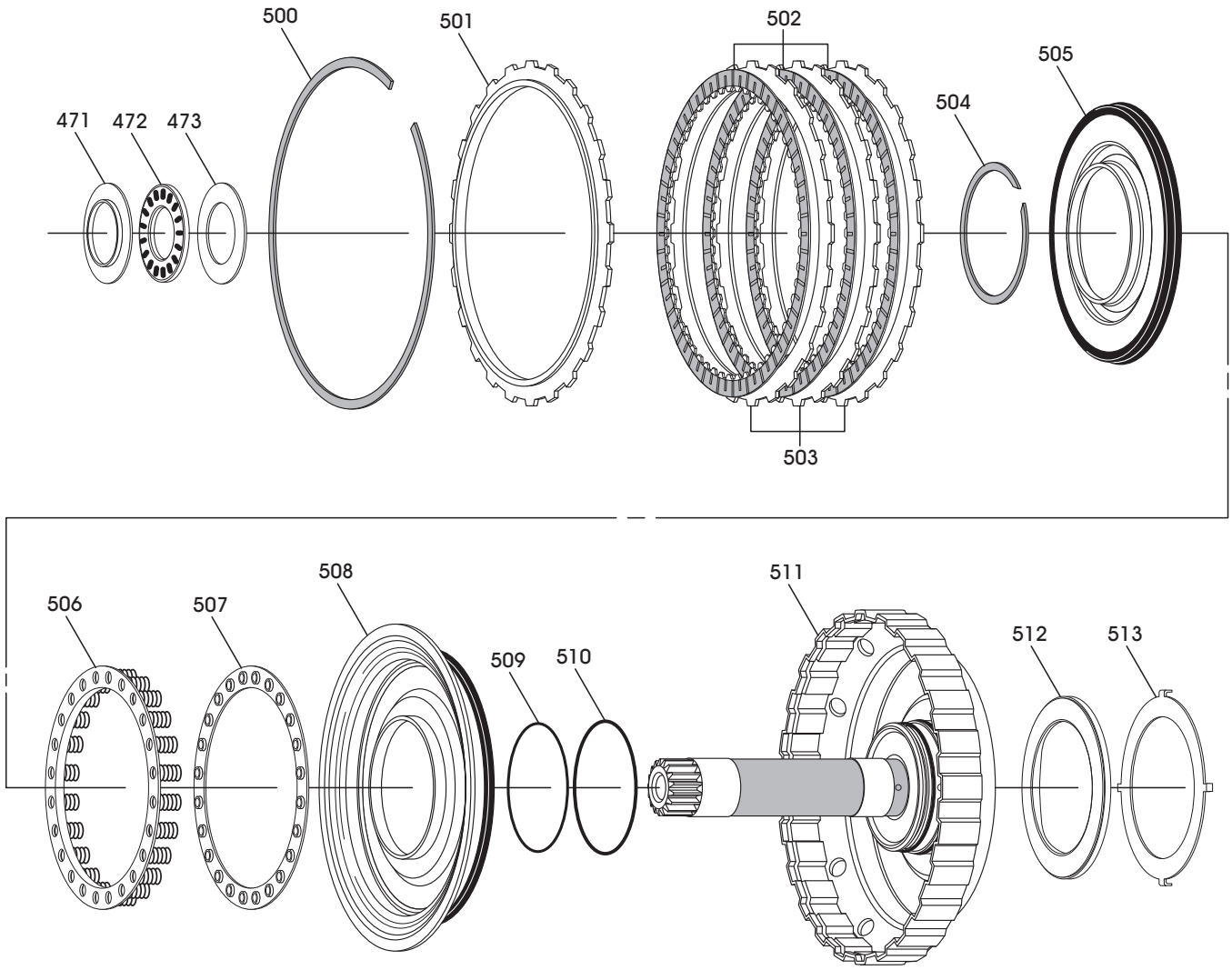

471 NUMBER 9 "FRONT" THRUST BEARING RACE.
472 NUMBER 9 THRUST BEARING.
473 NUMBER 9 "REAR" THRUST BEARING RACE.
500 K2 CLUTCH BACKING PLATE SNAP RING (.065" THICKNESS).
501 K2 CLUTCH BACKING PLATE, .114".
502 K2 CLUTCH FRICTION PLATES (QUANTITY MAY VARY).
503 K2 CLUTCH STEEL PLATES , .071" (QUANTITY MAY VARY).
504 K2 CLUTCH BALANCE PISTON SNAP RING.
505 K2 CLUTCH "MOULDED" BALANCE PISTON.
506 K2 CLUTCH APPLY PISTON RETURN SPRING ASSEMBLY.
507 K2 CLUTCH APPLY PISTON RETURN SPRING SEAT.
508 K2 CLUTCH "MOULDED" APPLY PISTON.
509 K2 CLUTCH BALANCE PISTON INNER "O" RING SEAL (THIN).
510 K2 CLUTCH APPLIY PISTON INNER "O" RING SEAL (THICK).
511 K2 CLUTCH HOUSING ASSEMBLY.
512 NUMBER 11 THRUST BEARING.
513 NUMBER 11 THRUST BEARING RACE.

Copyright © 2010 ATSG

Figure 120

WWW.ALL-TRANS.BY

COMPONENT REBUILD (CONT'D)

K2 CLUTCH HOUSING ASSEMBLY (CONT'D)

4. Install the K2 apply piston inner "O" ring seal in the bottom groove of housing, as shown in Figure 121.
   Note: Body of this "O" ring measures .105".
5. Install the K2 balance piston inner "O" ring seal in the center groove of housing, as shown in Figure 121.
   Note: Body of this "O" ring measures .055".
6. Install the K2 return spring assembly to the spring seat, as shown in Figure 122, and retain with Trans-Jel®.
7. Lubricate the seal surfaces of K2 clutch apply piston and install the piston into K2 clutch housing, as shown in Figure 123
8. Install K2 clutch piston return spring assembly, as shown in Figure 123.
9. Lube the balance piston seal and install piston, as shown in Figure 123.
10. Compress the balance piston and install the snap ring, as shown in Figure 123.

Continued on Page 78

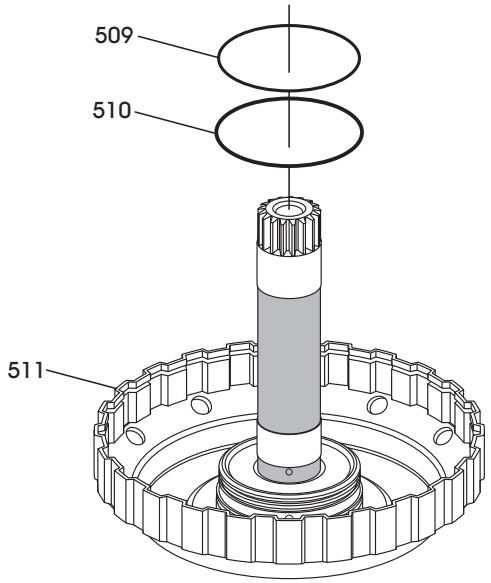

509 K2 CLUTCH BALANCE PISTON INNER "O" RING SEAL (THIN).
510 K2 CLUTCH APPLIY PISTON INNER "O" RING SEAL (THICK).
511 K2 CLUTCH HOUSING ASSEMBLY.

Copyright © 2010 ATSG

Figure 121

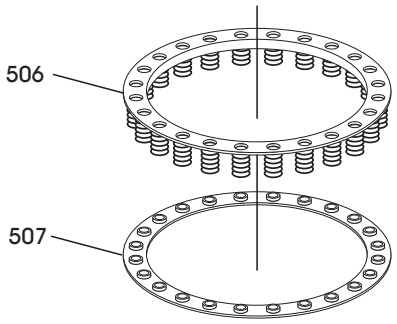

506 K2 CLUTCH APPLY PISTON RETURN SPRING ASSEMBLY.
507 K2 CLUTCH APPLY PISTON RETURN SPRING SEAT.

Copyright © 2010 ATSG

Figure 122

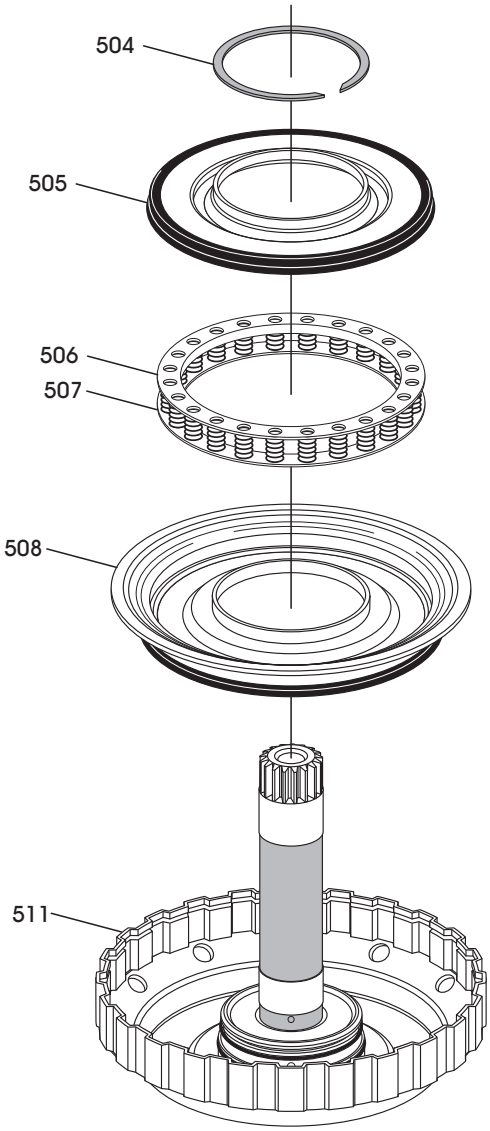

504 K2 CLUTCH BALANCE PISTON SNAP RING.
505 K2 CLUTCH "MOULDED" BALANCE PISTON.
506 K2 CLUTCH APPLY PISTON RETURN SPRING ASSEMBLY.
507 K2 CLUTCH APPLY PISTON RETURN SPRING SEAT.
508 K2 CLUTCH "MOULDED" APPLY PISTON.
511 K2 CLUTCH HOUSING ASSEMBLY.

Copyright © 2010 ATSG

Figure 123

WWW.ALL-TRANS.BY

COMPONENT REBUILD (CONT'D)

K2 CLUTCH HOUSING ASSEMBLY (CONT'D)

11. Install the K2 clutch pack beginning with a steel plate and alternating with frictions, as shown in Figure 124, until you have installed the proper quantity, as the quantity may vary.
    Note: All friction plates should be soaked in proper fluid for 30 minutes before installing.
12. Install the K2 clutch backing plate on top of the last friction, as shown in Figure 124, with step side facing up.
13. Install the K2 clutch backing plate snap ring, as shown in Figure 124.
    Note: This snap ring is .065" thick.
14. Measure the K2 clutch clearance with a feeler gauge between the backing plate and friction plate, as shown in Figure 125.
    Note: There are no factory clutch clearance specifications available, but the clearances were the "traditional" .010" per friction plate through-out this unit. Refer to Figure 125 for K2 clutch clearance with 3 frictions.

Continued on Page 79

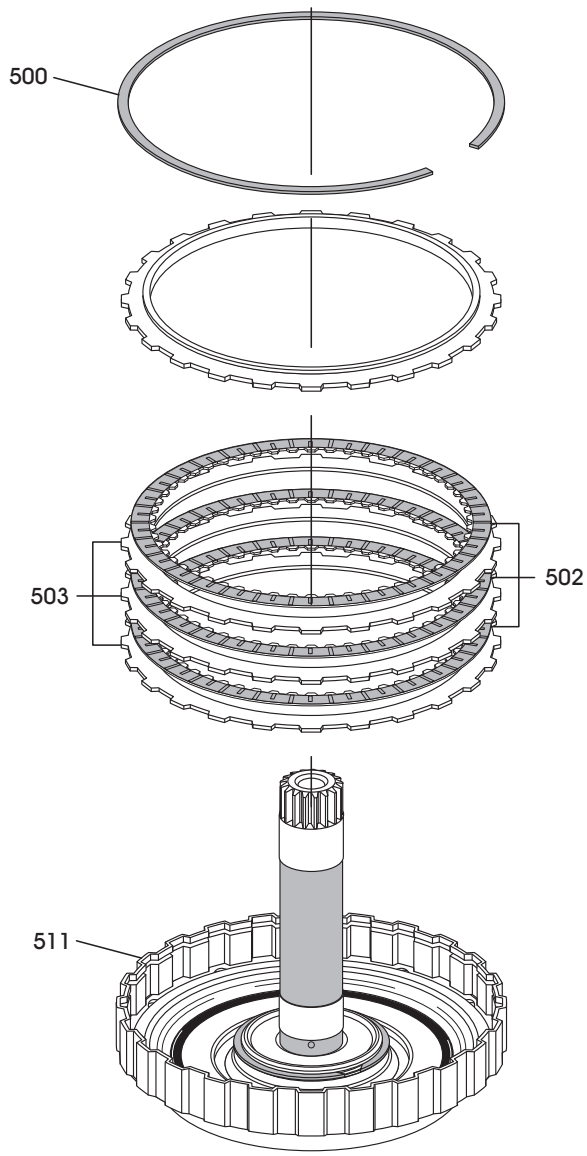

500 K2 CLUTCH BACKING PLATE SNAP RING (.065" THICKNESS).
501 K2 CLUTCH BACKING PLATE.
502 K2 CLUTCH FRICTION PLATES (QUANTITY MAY VARY).
503 K2 CLUTCH STEEL PLATES (QUANTITY MAY VARY).
511 K2 CLUTCH HOUSING ASSEMBLY.

Copyright © 2010 ATSG

Figure 124

Factory K2 Clutch Clearance Was 0.74 MM (.029") With 3 Frictions

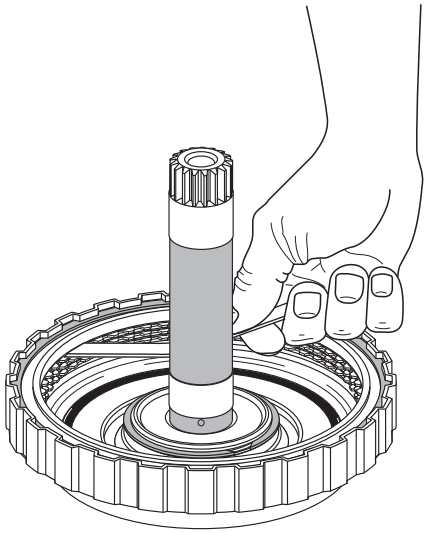

Copyright © 2010 ATSG

Figure 125

WWW.ALL-TRANS.BY

COMPONENT REBUILD (CONT'D)
K2 CLUTCH HOUSING ASSEMBLY (CONT'D)

15. Turn the K2 clutch housing assembly over and install the number 11 thrust bearing, as shown in Figure 126, with the needles facing up.
16. Retain the number 11 thrust bearing with liberal amount of Trans-Jel®.
17. Turn the K2 clutch housing assembly over again and install the number 9 "rear" thrust bearing race, as shown in Figure 127, and retain with a small amount of Trans-Jel®.
18. Install the K2 clutch housing number 9 thrust bearing, as shown in Figure 127, and retain with Trans-Jel®.
    Note: "Do Not" install the number 9 "front" thrust bearing race (471) illustrated in Figure 127. This will be installed on the rear sun gear of the rear planetary.
19. Set the completed K2 clutch housing aside for the final assembly process.

Component Rebuild
Continued on Page 80

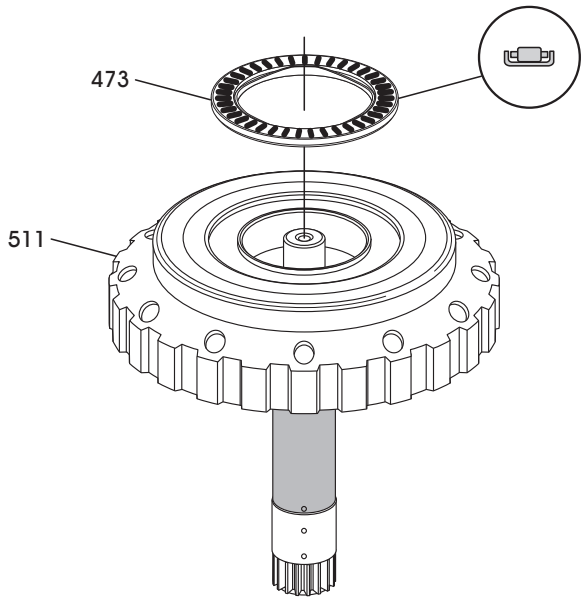

511 K2 CLUTCH HOUSING ASSEMBLY.
512 NUMBER 11 THRUST BEARING.

Copyright © 2010 ATSG

Figure 126

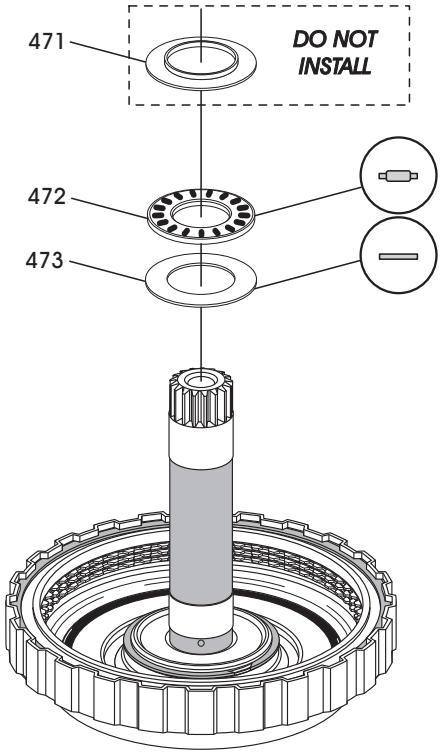

471 NUMBER 9 "FRONT" THRUST BEARING RACE.
472 NUMBER 9 THRUST BEARING.
473 NUMBER 9 "REAR" THRUST BEARING RACE.
511 K2 CLUTCH HOUSING ASSEMBLY.

Copyright © 2010 ATSG

Figure 127

COMPLETED K2 CLUTCH HOUSING

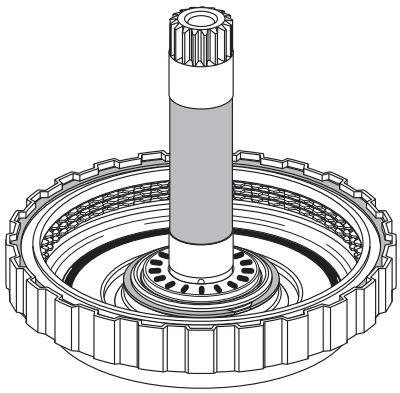

Copyright © 2010 ATSG

Figure 128

WWW.ALL-TRANS.BY

COMPONENT REBUILD (CONT'D)

REAR PLANETARY ASSEMBLY

1. Disassemble the rear planetary assembly using Figure 129 as a guide.
   Note: Front sun gear is captured and cannot be removed from rear planetary carrier.
3. Clean all rear planetary parts thoroughly and dry with compressed air.
3. Inspect all rear planetary parts thoroughly for any wear and/or damage, replace as necessary.

WARNING: At time of this printing, there are not any new "hard parts" available from the manufacturer for this unit. The only source will be used aftermarket suppliers.

Continued on Page 81

REAR PLANETARY GEAR SET AND ASSOCIATED PARTS, EXPLODED VIEW

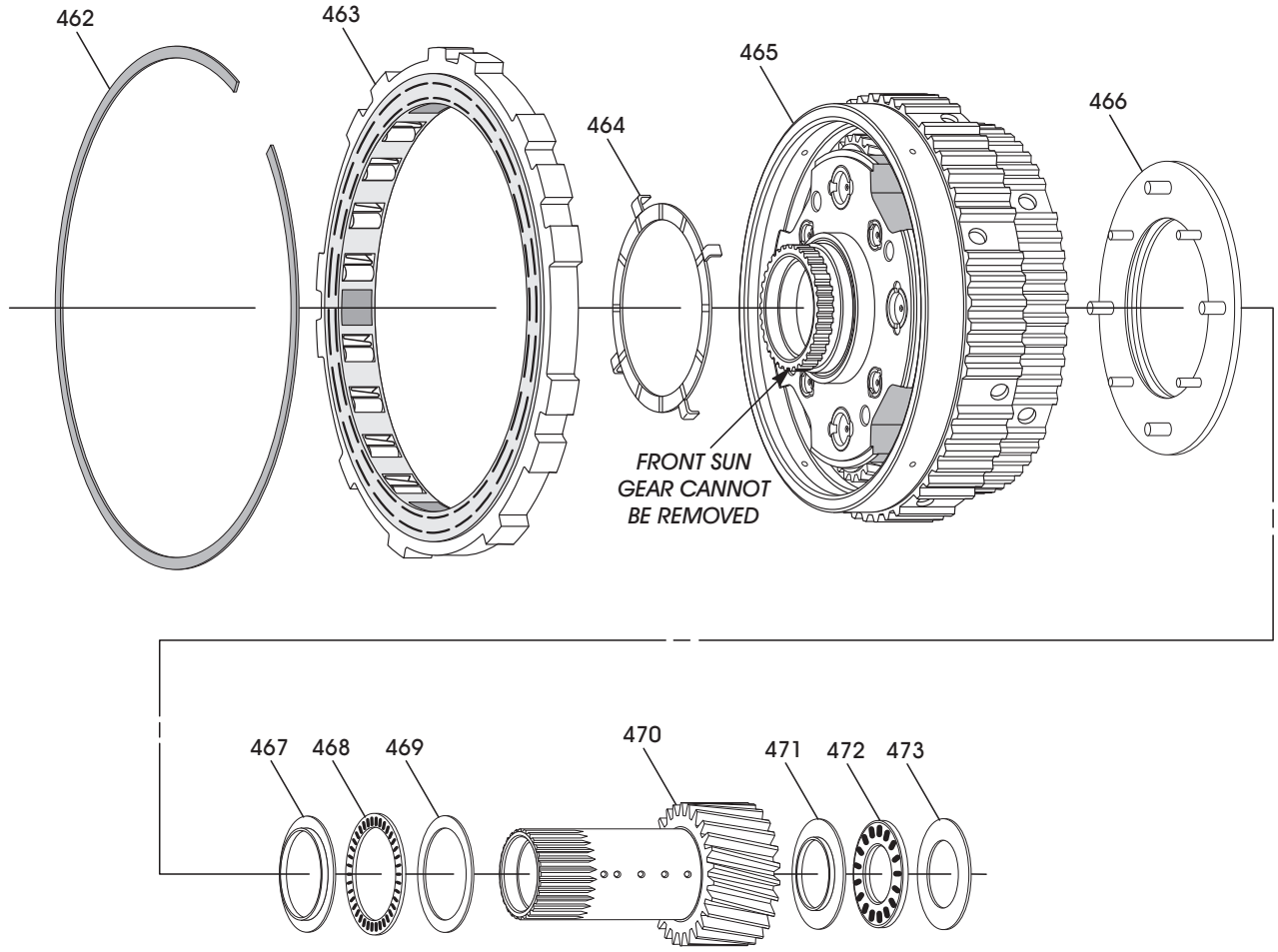

462 F1 ROLLER CLUTCH SNAP RING (.048" THICKNESS).
463 F1 ROLLER CLUTCH ASSEMBLY.
464 NUMBER 7 THRUST WASHER (BRONZE).
465 REAR PLANETARY "RAVIGNEAUX" GEAR SET.
466 NUMBER 10 THRUST WASHER (PLASTIC).
467 NUMBER 8 "FRONT" THRUST BEARING RACE.
468 NUMBER 8 THRUST BEARING.
469 NUMBER 8 "REAR" THRUST BEARING RACE.
470 REAR SUN GEAR.
471 NUMBER 9 "FRONT" THRUST BEARING RACE.
472 NUMBER 9 THRUST BEARING.
473 NUMBER 9 "REAR" THRUST BEARING RACE.

Copyright © 2010 ATSG

Figure 129

WWW.ALL-TRANS.BY

COMPONENT REBUILD (CONT'D)

REAR PLANETARY ASSEMBLY (CONT'D)

4. Place the rear planetary carrier on a flat work surface, as shown in Figure 130.
5. Install the number 7 thrust washer, as shown in Figure 130, and retain with Trans-Jel®.
   Note: This is the only "bronze" washer.
6. Install the F1 roller clutch onto the planetary carrier, as shown in Figure 130, by rotating carefully in a counter-clockwise direction until fully seated.
7. Turn the rear carrier assembly over and place on a set of appropriate blocks with front side facing down, as shown in Figure 131.
   Note: The rear carrier must be placed on the blocks as shown, to allow the front sun gear and shaft to seat on the inside of the carrier. If sun gear is not down, the number 8 thrust bearing and front race will not seat properly, and it must seat into a pocket cut in the front sun gear.
   Refer to the cut-away in Figure 132.

Continued on Page 82

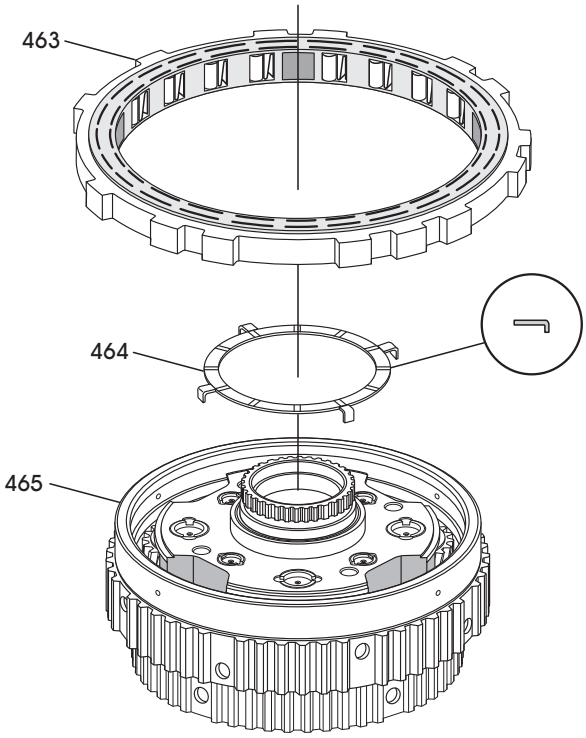

463 F1 ROLLER CLUTCH ASSEMBLY.
464 NUMBER 7 THRUST WASHER (BRONZE).
465 REAR PLANETARY "RAVIGNEAUX" GEAR SET.

Copyright © 2010 ATSG

Figure 130

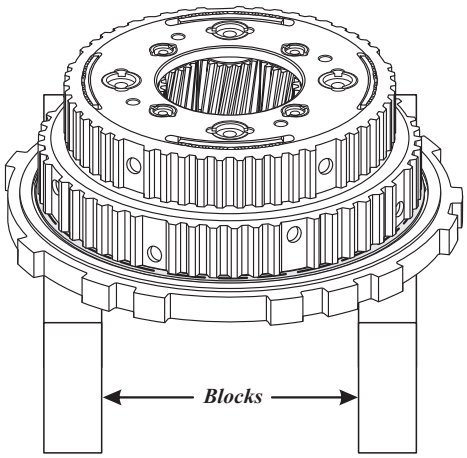

Copyright © 2010 ATSG

Figure 131

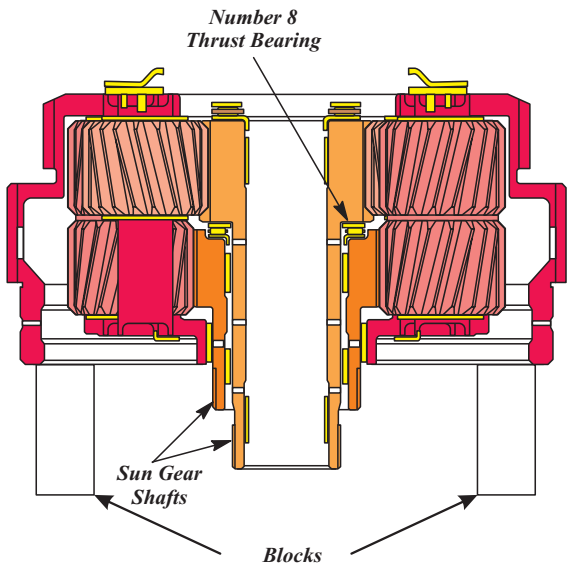

Copyright © 2010 ATSG

Figure 132

WWW.ALL-TRANS.BY

COMPONENT REBUILD (CONT'D)

REAR PLANETARY ASSEMBLY (CONT'D)

8. Install the number 8 "front" thrust bearing race into the pocket of front sun gear in planetary carrier, as shown in Figure 133.
9. Install the number 8 thrust bearing into carrier, as shown in Figure 133.
10. Install the number 8 "rear" thrust bearing race on the front side of rear sun gear, as shown in Figure 134, and retain with Trans-Jel®.
11. Install the number 9 "front" thrust bearing race on the rear side of rear sun gear, as shown in Figure 134, and retain with Trans-Jel®.

Continued on Page 83

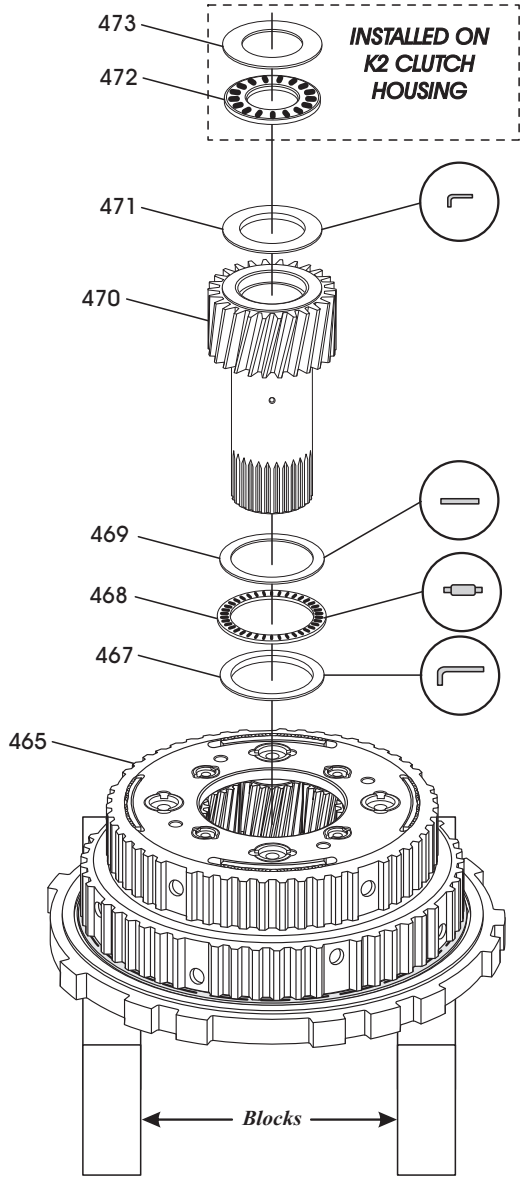

465 REAR PLANETARY "RAVIGNEAUX" GEAR SET.
467 NUMBER 8 "FRONT" THRUST BEARING RACE.
468 NUMBER 8 THRUST BEARING.
469 NUMBER 8 "REAR" THRUST BEARING RACE.
470 REAR SUN GEAR.
471 NUMBER 9 "FRONT" THRUST BEARING RACE.
472 NUMBER 9 THRUST BEARING.
473 NUMBER 9 "REAR" THRUST BEARING RACE.

Copyright © 2010 ATSG

Figure 133

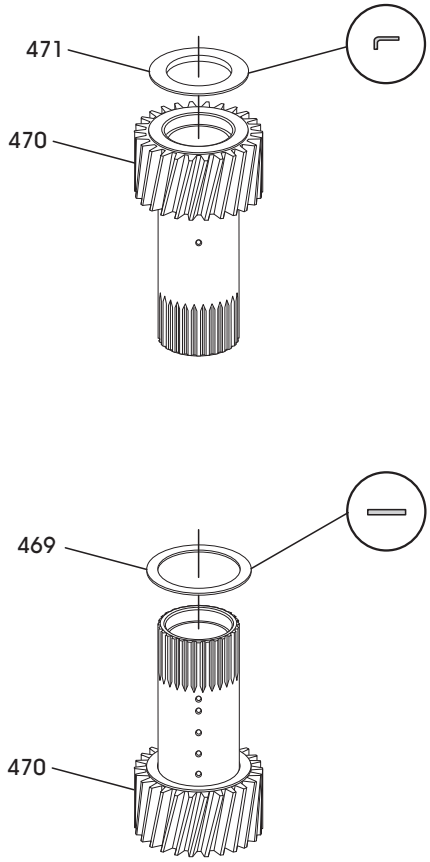

469 NUMBER 8 "REAR" THRUST BEARING RACE.
470 REAR SUN GEAR.
471 NUMBER 9 "FRONT" THRUST BEARING RACE.

Copyright © 2010 ATSG

Figure 134

WWW.ALL-TRANS.BY

COMPONENT REBUILD (CONT'D)

REAR PLANETARY ASSEMBLY (CONT'D)

12. Install the completed sun gear assembly into rear planetary carrier, as shown in Figure 135, by rotating into position.
13. Place a 1-1/8", 1/2" drive socket on the rear sun gear, as shown in Figure 136.
14. Gently roll the complete assembly over while holding the socket in place until the planetary assembly is setting upright on the socket, as shown in Figure 137.
    Note: This will retain the seated position of the two sun gears.
15. Carefully place the vice-grips on the splines of rear sun gear and against the shoulder of the front sun gear, as shown in Figure 137, and set the complete assembly aside for final assembly.

Component Rebuild
Continued on Page 84

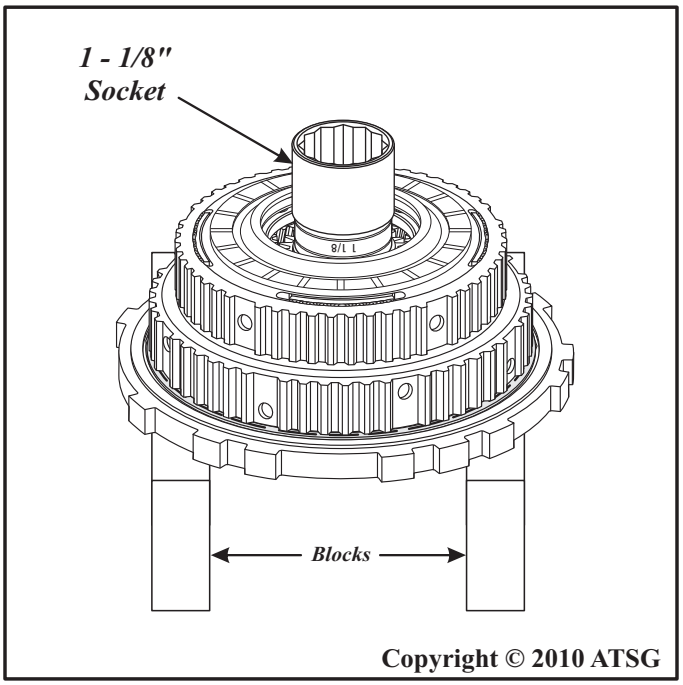

Figure 136

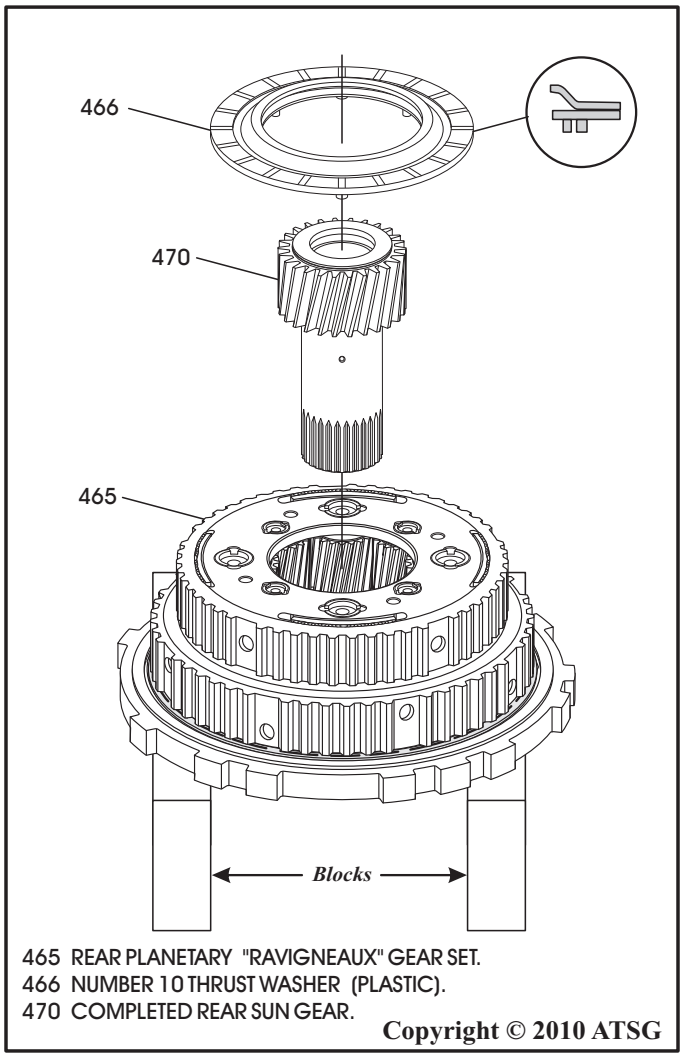

Figure 135

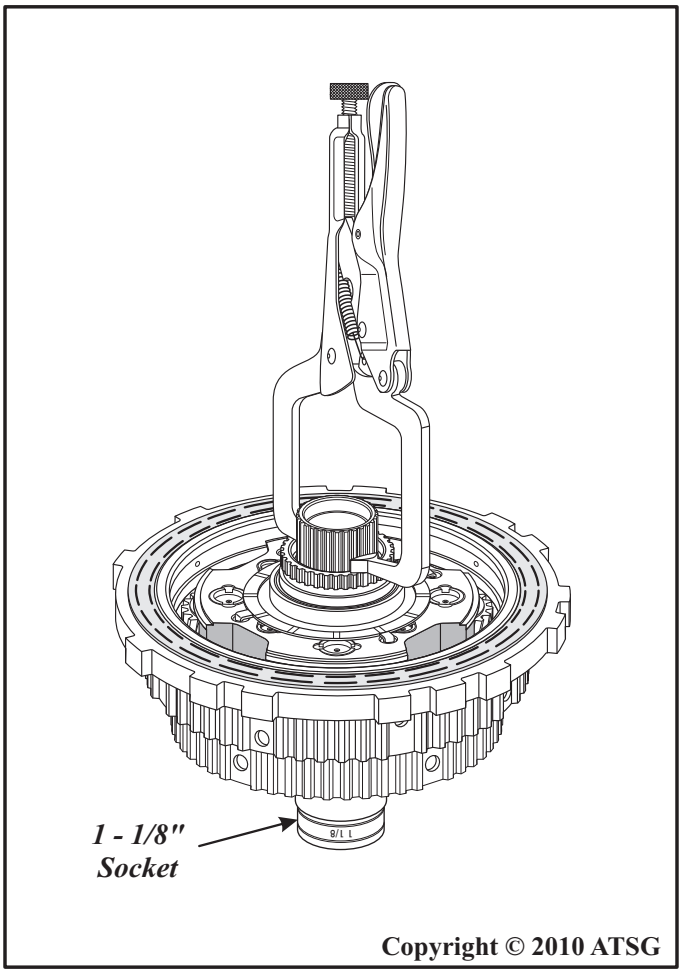

Figure 137

WWW.ALL-TRANS.BY

COMPONENT REBUILD (CONT'D)

FRONT PLANETARY ASSEMBLY

1. Disassemble the front planetary assembly using Figure 129 as a guide.
3. Clean all front planetary parts thoroughly and dry with compressed air.
3. Inspect all front planetary parts thoroughly for any wear and/or damage, replace as necessary.

WARNING: At time of this printing, there are not any new "hard parts" available from the manufacturer for this unit. The only source will be used aftermarket suppliers.

Continued on Page 85

FRONT PLANETARY AND ASSOCIATED PARTS, EXPLODED VIEW

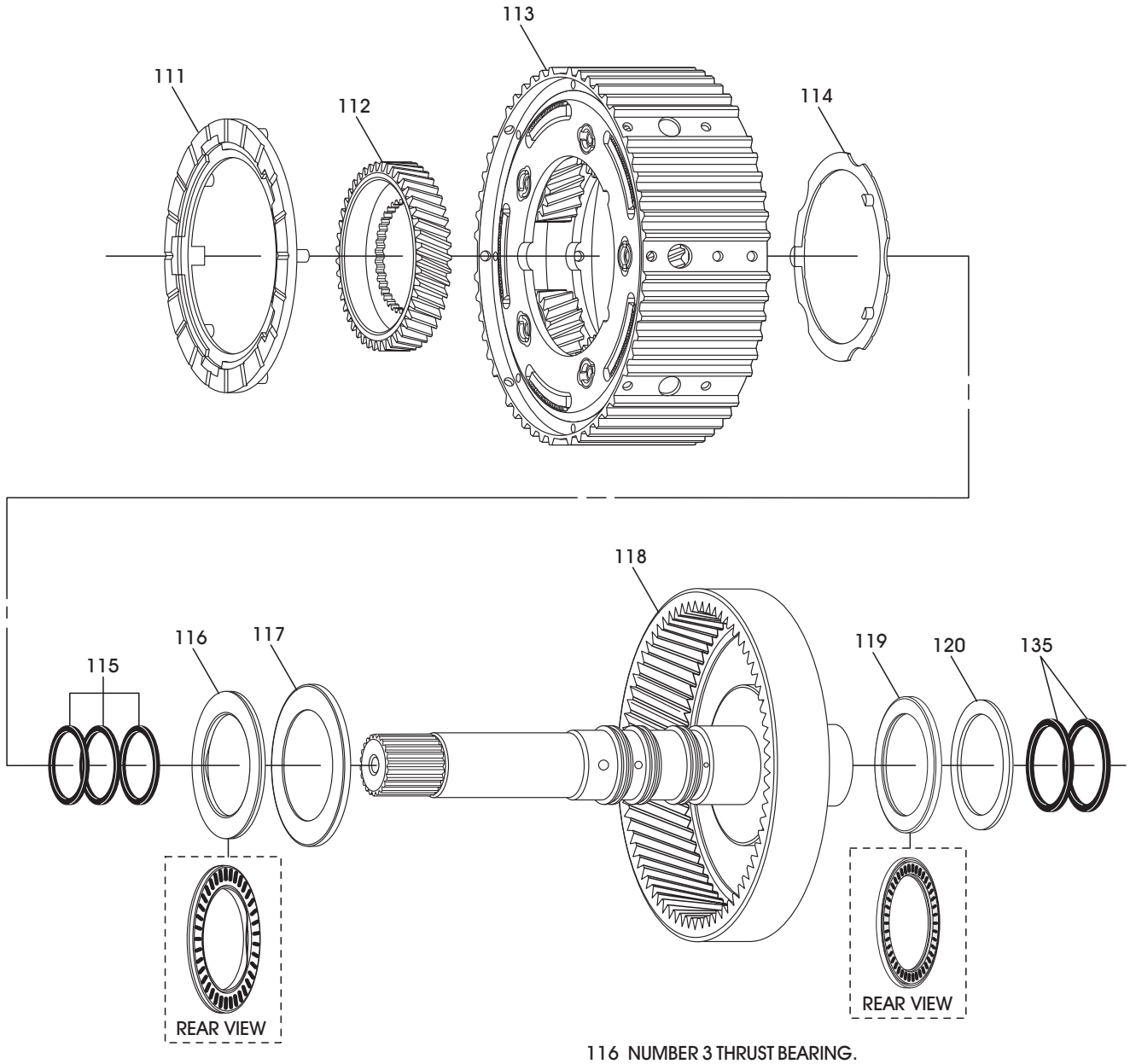

111 NUMBER 2 THRUST WASHER.
112 FRONT PLANETARY SUN GEAR.
113 FRONT PLANETARY CARRIER ASSEMBLY.
114 NUMBER 4 THRUST WASHER.
115 INPUT SHAFT SEALING RINGS (3 REQUIRED).
116 NUMBER 3 THRUST BEARING.
117 NUMBER 3 THRUST BEARING RACE.
118 FRONT PLANETARY RING GEAR AND INPUT SHAFT ASSEMBLY.
119 NUMBER 5 THRUST BEARING.
120 NUMBER 5 THRUST BEARING RACE.
135 K1 CLUTCH SEALING RINGS (2 REQUIRED).

Copyright © 2010 ATSG

Figure 138

WWW.ALL-TRANS.BY

COMPONENT REBUILD (CONT'D)

FRONT PLANETARY ASSEMBLY (CONT'D)

4. Install the number 5 thrust bearing onto back side of input shaft and front planet ring gear, as shown in Figure 139, with needles facing up and retain with Trans-Jel®.
   Note: Number 5 thrust bearing race already installed on K1 clutch housing.
5. Install two new sealing rings into the grooves of input shaft, as shown in Figure 139.
6. Turn assembly over and install the number 3 thrust bearing race, as shown in Figure 140, and retain with Trans-Jel®.
7. Install number 4 thrust washer on back side of front planetary carrier, as shown in Figure 141, and retain with Trans-Jel®.
   Note: This washer is included in Trans-Tec® rebuild kit.

Continued on Page 86

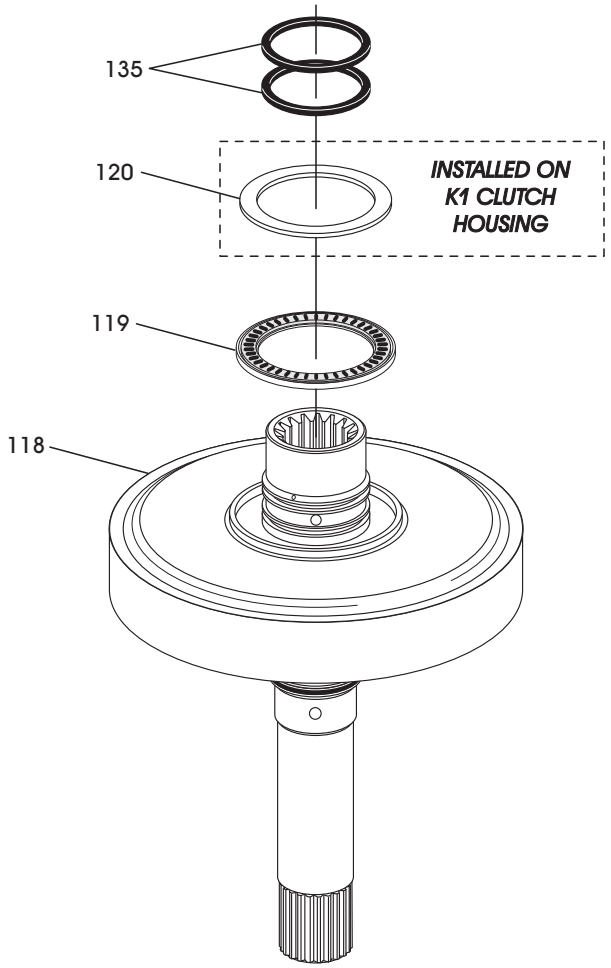

118 FRONT PLANETARY RING GEAR AND INPUT SHAFT ASSEMBLY.
119 NUMBER 5 THRUST BEARING.
120 NUMBER 5 THRUST BEARING RACE.
135 K1 CLUTCH SEALING RINGS (2 REQUIRED).

Copyright © 2010 ATSG

Figure 139

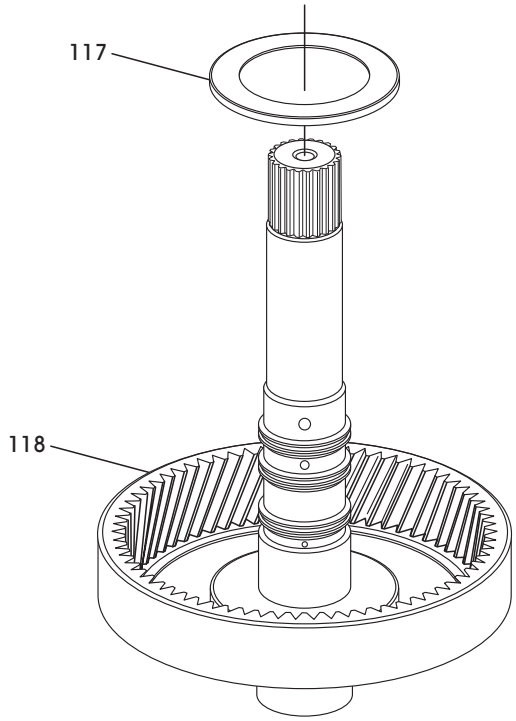

117 NUMBER 3 THRUST BEARING RACE.
118 FRONT PLANETARY RING GEAR AND INPUT SHAFT ASSEMBLY.

Copyright © 2010 ATSG

Figure 140

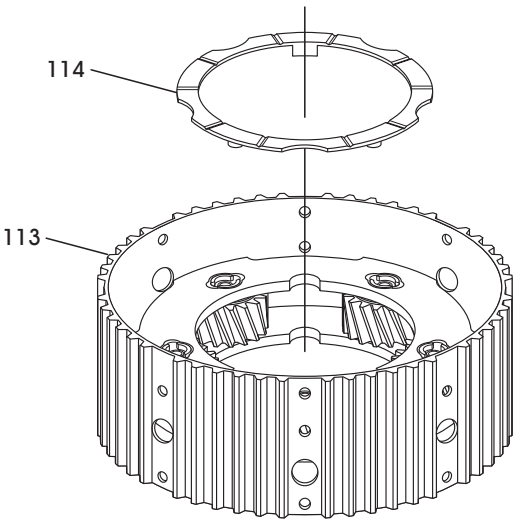

113 FRONT PLANETARY CARRIER ASSEMBLY.
114 NUMBER 4 THRUST WASHER.

Copyright © 2010 ATSG

Figure 141

WWW.ALL-TRANS.BY

COMPONENT REBUILD (CONT'D)

FRONT PLANETARY ASSEMBLY (CONT'D)

8. Install three new sealing rings in the grooves of input shaft, as shown in Figure 142.
9. Install the front planetary carrier assembly into planetary ring gear, as shown in Figure 143, by rotating into position.
   Note: Ensure number 4 thrust washer and number 3 thrust bearing race are in place.
10. Install the number 3 thrust bearing, as shown in Figure 143, with needles facing down.
11. Install the front planetary sun gear, as shown in Figure 143, by rotating into position.
12. Install the number 2 thrust washer, as shown in Figure 143, and retain with Trans-Jel®.
13. Set the completed front planetary assembly aside for the final assembly process, as shown in Figure 144.

Componet Rebuild
Continued on Page 87

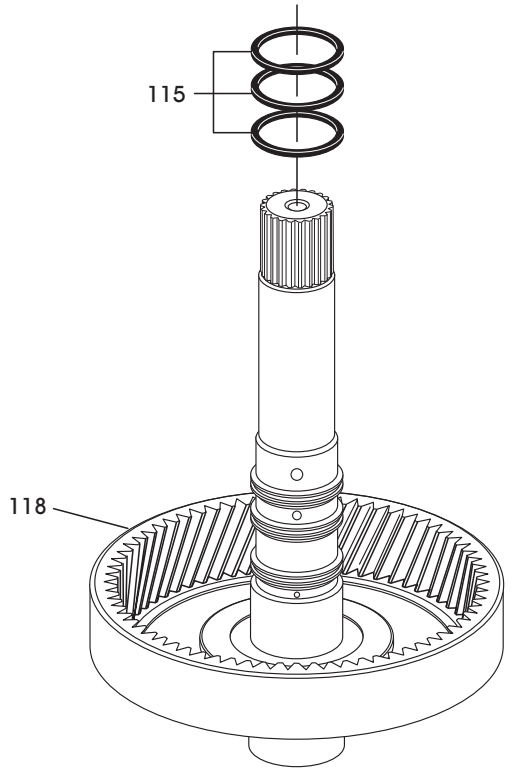

115 INPUT SHAFT SEALING RINGS (3 REQUIRED).
118 FRONT PLANETARY RING GEAR AND INPUT SHAFT ASSEMBLY.

Figure 142

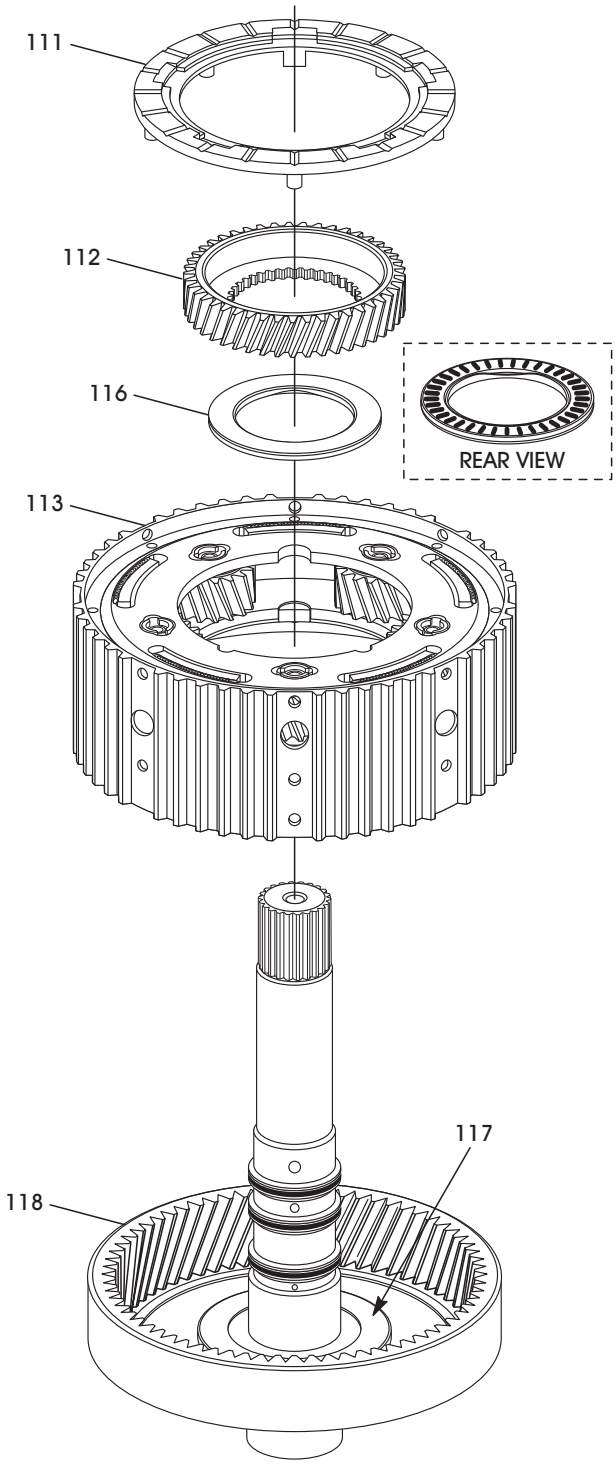

111 NUMBER 2 THRUST WASHER.
112 FRONT PLANETARY SUN GEAR.
113 FRONT PLANETARY CARRIER ASSEMBLY.
116 NUMBER 3 THRUST BEARING.
117 NUMBER 3 THRUST BEARING RACE.
118 FRONT PLANETARY RING GEAR AND INPUT SHAFT ASSEMBLY.

Copyright © 2010 ATSG

Figure 143

WWW.ALL-TRANS.BY

COMPLETED FRONT PLANETARY ASSEMBLY

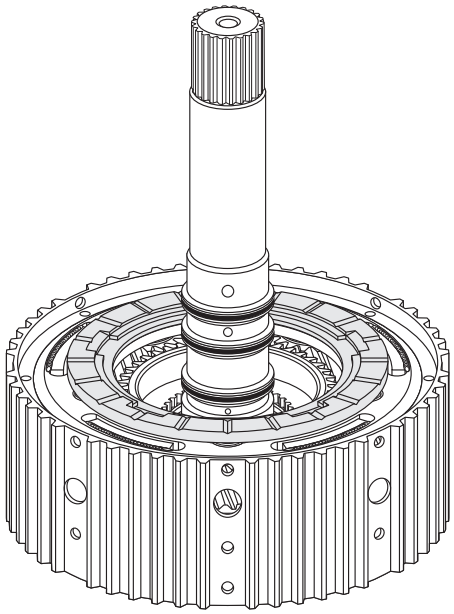

Copyright © 2010 ATSG

Figure 144

COMPONENT REBUILD (CONT'D)

CENTER SUPPORT ASSEMBLY

1. You can disassemble center support assembly using Figure 145 as a guide.
   Note: It is not necessary nor recommended to disassemble center support, as visual damage would require complete replacement anyway. If replacement is necessary, ensure that you recieve the proper tooth count for transfer drive gear.
3. Clean all center support parts thoroughly and dry with compressed air.
3. Inspect all center support parts thoroughly for any wear and/or damage, replace as necessary.

WARNING: At time of this printing, there are not any new "hard parts" available from the manufacturer for this unit. The only source will be used aftermarket suppliers.

4. The torque specification on the retaining nut is approximately 34 N·m (25 ft.lb.).
5. Set completed center support assembly aside for the final assembly process.

Component Rebuild
Continued on Page 88

CENTER SUPPORT AND ASSOCIATED PARTS, EXPLODED VIEW

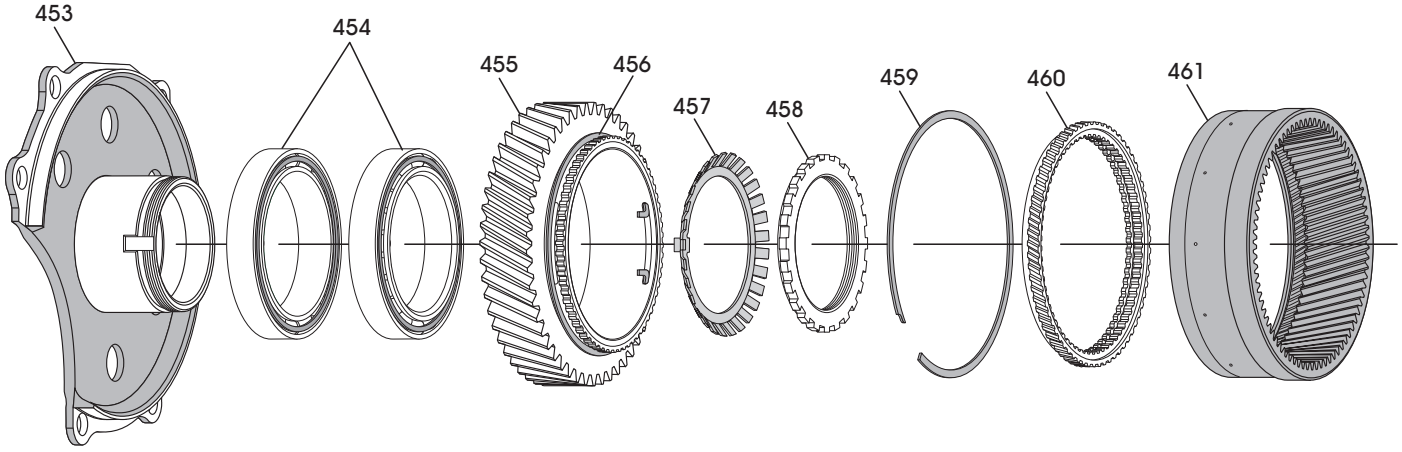

453 CENTER SUPPORT CASTING.
454 CENTER SUPPORT BALL BEARINGS (2 REQUIRED).
455 TRANSFER DRIVE GEAR.
456 REAR PLANETARY RING GEAR INTERNAL SNAP RING.
457 CENTER SUPPORT NUT LOCKING TAB.
458 CENTER SUPPORT DRIVE GEAR RETAINING NUT.
459 REAR PLANETARY RING GEAR HUB RETAINING SNAP RING.
460 REAR PLANETARY RING GEAR HUB.
461 REAR PLANETARY INTERNAL RING GEAR.

Copyright © 2010 ATSG

Figure 145

WWW.ALL-TRANS.BY

COMPONENT REBUILD (CONT'D)

TRANSFER/PINION GEAR ASSEMBLY

1. Disassemble transfer driven gear/pinion gear assembly, using Figure 146 as a guide.
   Note: Press is required to remove the tapered roller bearings.
3. Clean all transfer driven gear/pinion gear parts thoroughly and dry with compressed air.
3. Inspect all transfer driven gear/pinion gear parts thoroughly for any wear and/or damage, replace as necessary.
   Note: If replacement is necessary, verify the tooth count on transfer gear and pinion gear.

WARNING: At time of this printing, there are not any new "hard parts" available from the manufacturer for this unit. The only source will be used aftermarket suppliers.

4. Install new tapered roller bearings as necessary as shown in Figure 146.
5. Set transfer driven gear/pinion gear assembly aside for the final assembly process.

COMPONENT REBUILD (CONT'D)

FINAL DRIVE ASSEMBLY

1. The final drive assembly is illustrated for you in Figure 147.
   Note: It is not necessary nor recommended to disassemble final drive, as visual damage would require complete replacement anyway. If replacement is necessary, ensure that you recieve the proper tooth count for ring gear.
3. Clean all final drive parts thoroughly and dry with compressed air.
3. Inspect all final drive parts thoroughly for any wear and/or damage, replace as necessary.

WARNING: At time of this printing, there are not any new "hard parts" available from the manufacturer for this unit. The only source will be used aftermarket suppliers.

4. Set the completed final drive assembly aside for the final assembly process.

Component Rebuild
Continued on Page 89

TRANSFER/PINION GEAR EXPLODED VIEW

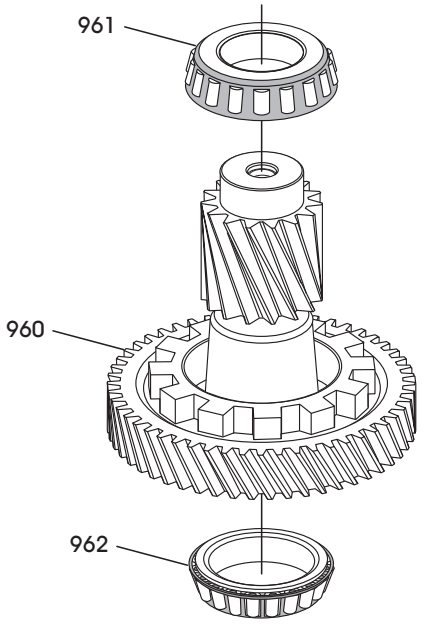

960 TRANSFER DRIVEN GEAR/PINION GEAR SHAFT.
961 TAPERED ROLLER BEARING (CONVERTER COVER SIDE).
962 TAPERED ROLLER BEARING (CASE SIDE).

Copyright © 2010 ATSG

Figure 146

COMPLETED FINAL DRIVE ASSEMBLY

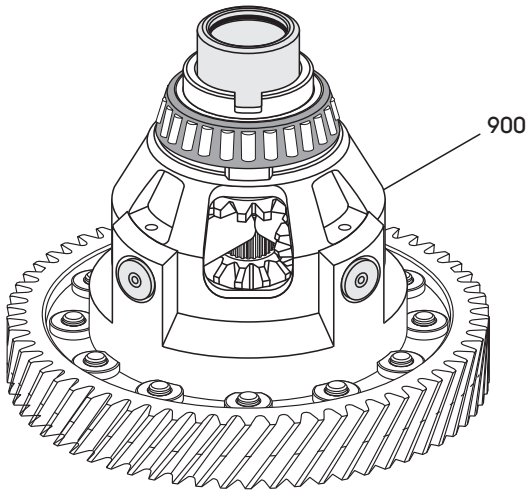

900 FINAL DRIVE ASSEMBLY.

Copyright © 2010 ATSG

Figure 147

WWW.ALL-TRANS.BY

COMPONENT REBUILD (CONT'D)

VALVE BODY ASSEMBLY

1. Disassemble the main valve body components using Figure 148 and 149 as a guide.
   Note: All valve body bolt lengths are found in the legend and must be positioned properly.
2. Clean all valve body components thoroughly and dry with compressed air.
   Note: Do not submerge solenoids in solvent.
3. Inspect all valve body components thoroughly for any damage.

Continued on Page 91

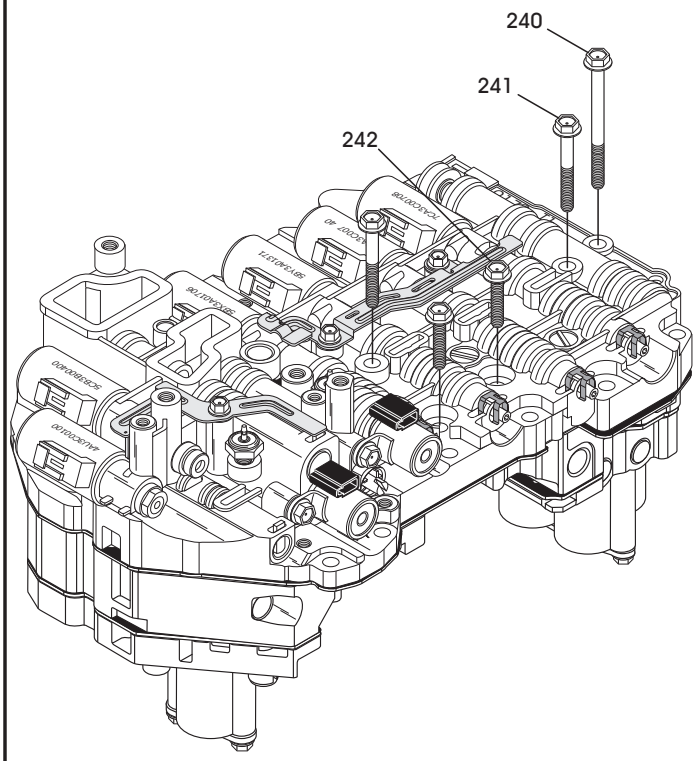

240 LOWER V.B. TO ACCUMULATOR HOUSING 2 BOLT (70 MM LENGTH).
241 LOWER V.B. TO UPPER V.B. BOLT (39.5 MM LENGTH).
242 LOWER V.B. TO UPPER V.B. BOLT (28 MM LENGTH).
243 ACCUMULATOR 2 HOUSING TO UPPER V.B. (64 MM LENGTH)(3 REQ).
244 ACCUMULATOR-2 HOUSING TO UPPER V.B. (52 MM LENGTH)(4 REQ).
245 ACCUMULATOR-1 HOUSING TO UPPER V.B. (52 MM LENGTH)(4 REQ).
246 ACCUMULATOR-1 HOUSING TO UPPER V.B. (64 MM LENGTH)(2 REQ).
247 ACCUMULATOR-2 HOUSING ASSEMBLY.
248 ACCUMULATOR-2 ASSEMBLY SPACER PLATE.
249 ACCUMULATOR-1 HOUSING ASSEMBLY.
250 ACCUMULATOR-1 ASSEMBLY SPACER PLATE.
251 UPPER V.B. TO LOWER V.B. BOLTS (21 MM LENGTH)(10 REQUIRED).
252 UPPER VALVE BODY ASSEMBLY.
254 LOWER VALVE BODY ASSEMBLY.
300 MAIN VALVE BODY SPACER PLATE.

Copyright © 2010 ATSG

Figure 148

"09G" VALVE BODY EXPLODED VIEW

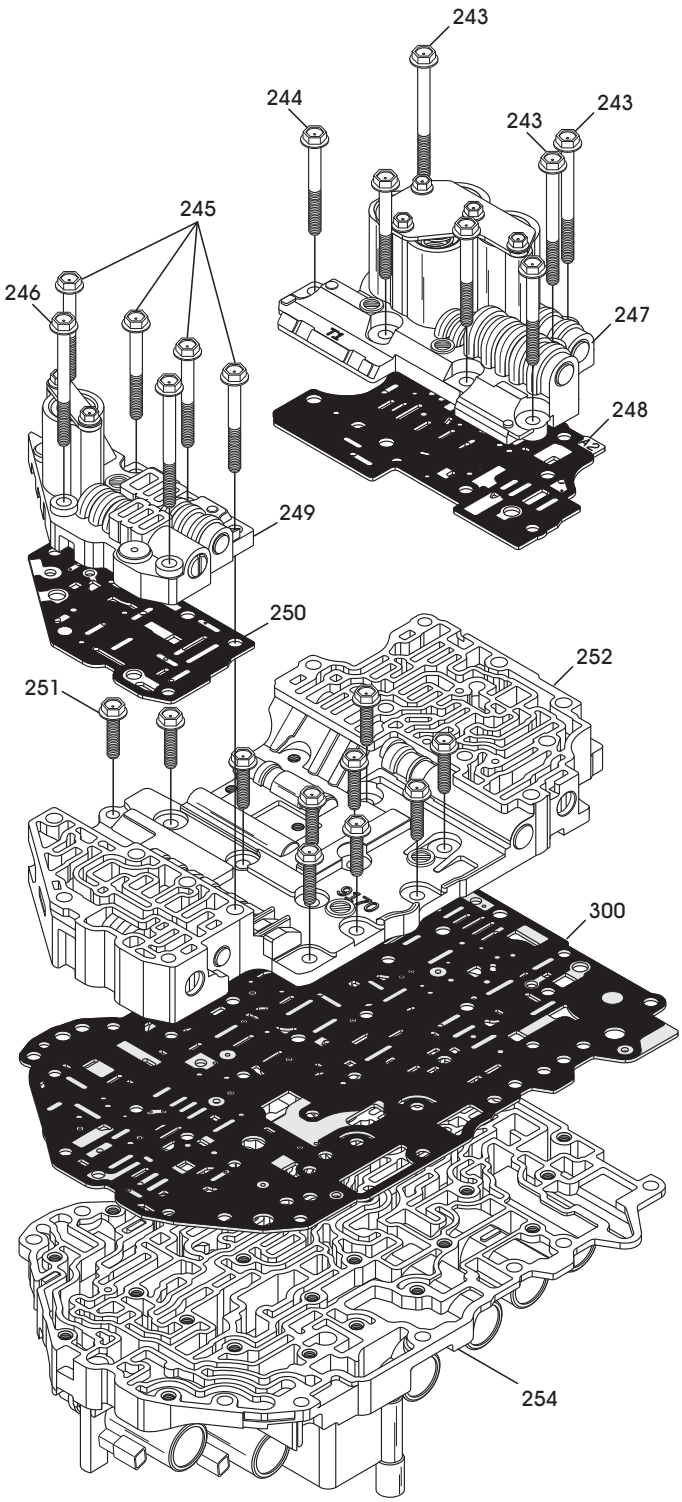

See Legnd in Figure 148

Copyright © 2010 ATSG

Figure 149

WWW.ALL-TRANS.BY

"09G" LOWER VALVE BODY ASSEMBLY, EXPLODED VIEW

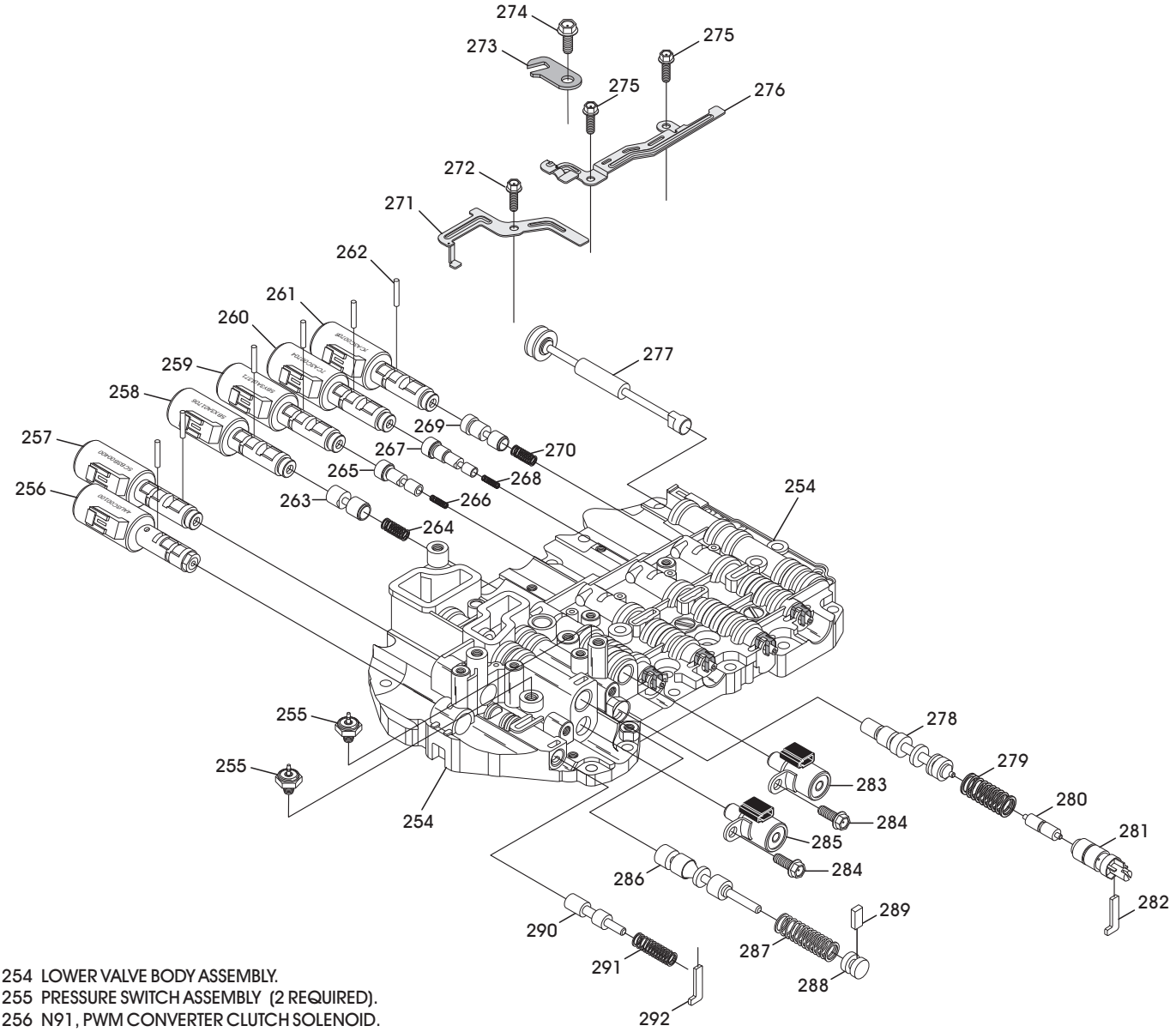

254 LOWER VALVE BODY ASSEMBLY.
255 PRESSURE SWITCH ASSEMBLY (2 REQUIRED).
256 N91, PWM CONVERTER CLUTCH SOLENOID.
257 N93, PWM LINE PRESSURE CONTROL SOLENOID.
258 N92, PWM K1 CLUTCH CONTROL SOLENOID.
259 N282, PWM K2 CLUTCH CONTROL SOLENOID.
260 N283, PWM B1 CLUTCH CONTROL SOLENOID.
261 N90, PWM K3 CLUTCH CONTROL SOLENOID.
262 PWM SOLENOID RETAINING PINS (6 REQUIRED)
263 K1 CLUTCH REGULATOR VALVE.
264 K1 CLUTCH REGULATOR VALVE SPRING.
265 K2 CLUTCH REGULATOR VALVE.
266 K2 CLUTCH REGULATOR VALVE SPRING.
267 B1 CLUTCH REGULATOR VALVE.
268 B1 CLUTCH REGULATOR VALVE SPRING.
269 K3 CLUTCH REGULATOR VALVE.
270 K3 CLUTCH REGULATOR VALVE SPRING.
271 N91 AND N93 SOLENOID PIN RETAINING BRACKET.
272 SOLENOID PIN RETAING BRACKET BOLT.
273 TRANSAXLE FLUID TEMPERATURE SENSOR RETAINING BRACKET.
274 TFT SENSOR RETAINING BRACKET BOLT.
275 SOLENOID PIN RETAINING BRACKET BOLTS (2 REQUIRED).
276 N92, N282, N283, N90 SOLENOID PIN RETAINING BRACKET.
277 MANUAL VALVE.
278 PRIMARY PRESSURE REGULATOR VALVE.
279 PRIMARY PRESSURE REGULATOR VALVE SPRING.
280 PRIMARY PRESSURE REGULATOR BOOST VALVE.
281 PRIMARY PRESSURE REGULATOR BOOST VALVE SLEEVE.
282 PRIMARY REGULATOR BOOST SLEEVE RETAINER.
283 N88, ON/OFF SOLENOID.
284 SOLENOID RETAINING BOLT (2 REQUIRED).
285 N89, ON/OFF SOLENOID.
286 SECONDARY PRESSURE REGULATOR VALVE.
287 SECONDARY PRESSURE REGULATOR SPRING.
288 SECONDARY PRESSURE REGULATOR BORE PLUG.
289 SECONDARY PRESSURE REGULATOR BORE PLUG RETAINER.
290 N88, N89, N90, N282, N283 SOLENOID REGULATOR VALVE.
291 SOLENOID REGULATOR VALVE SPRING.
292 SOLENOID REGULATOR VALVE SPRING RETAINER.

Copyright © 2010 ATSG

Figure 150

WWW.ALL-TRANS.BY

COMPONENT REBUILD (CONT'D)

VALVE BODY ASSEMBLY (CONT'D)

4. Disassemble lower valve body and place valves, springs and retainers on appropriate trays exactly as they were removed, as shown in Figure 150. Small parts are shown in Figure 151.
   Note: Tag the "Linear" solenoids on removal, as they are position sensitive.
5. Clean all lower valve body parts thoroughly and dry with compressed air.
   Note: Do not submerge solenoids in solvent.
6. Inspect all lower valve body parts thoroughly for any wear and/or damage.
   Note: Sonnax® has several kits available for bore wear and restoring bore integrity.
7. Assemble the lower valve body parts ***exactly*** as shown in Figure 150, and lube with the proper ATF as they are installed. Torque the solenoid retaining bracket bolts to 7 N·m (62 in.lb.).
   Note: Use a small amount of Trans-Jel® on the flat retainers, to prevent them from falling out, as all valves are not spring loaded.
8. Install the worm track small parts into the lower valve body exactly as shown in Figure 151.
   Note: VW check valve diameters are provided in Figure 151 legend. Spring specs are not provided as they vary by model.

Continued on Page 92

"09G" LOWER VALVE BODY SMALL PARTS, EXPLODED VIEW

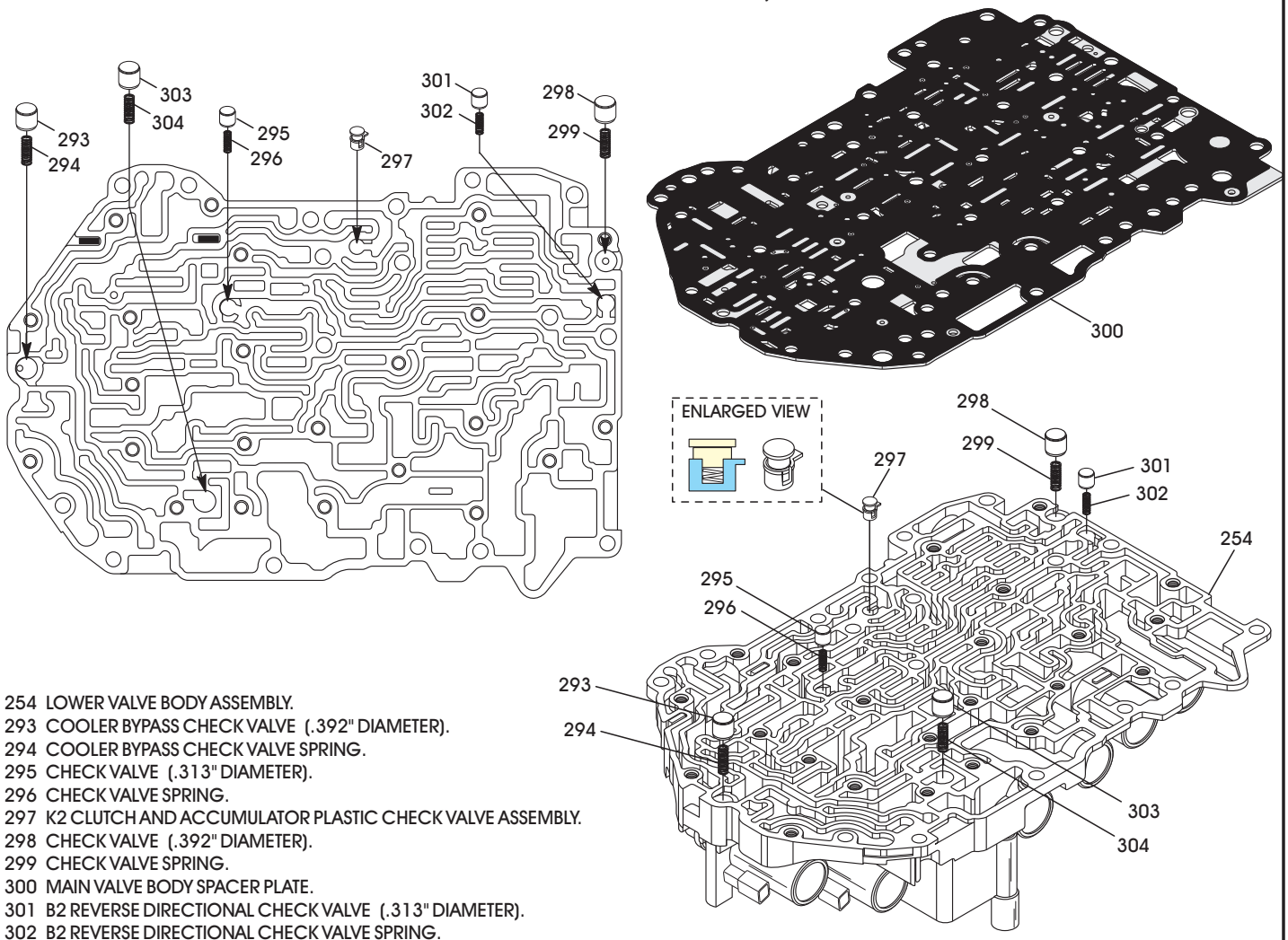

254 LOWER VALVE BODY ASSEMBLY.
293 COOLER BYPASS CHECK VALVE (.392" DIAMETER).
294 COOLER BYPASS CHECK VALVE SPRING.
295 CHECK VALVE (.313" DIAMETER).
296 CHECK VALVE SPRING.
297 K2 CLUTCH AND ACCUMULATOR PLASTIC CHECK VALVE ASSEMBLY.
298 CHECK VALVE (.392" DIAMETER).
299 CHECK VALVE SPRING.
300 MAIN VALVE BODY SPACER PLATE.
301 B2 REVERSE DIRECTIONAL CHECK VALVE (.313" DIAMETER).
302 B2 REVERSE DIRECTIONAL CHECK VALVE SPRING.
303 COOLER LUBE LIMIT CHECK VALVE (.392" DIAMETER).
304 COOLER LUBE LIMIT CHECK VALVE SPRING.

Copyright © 2010 ATSG

Figure 151

WWW.ALL-TRANS.BY

"09G" UPPER VALVE BODY ASSEMBLY, EXPLODED VIEW

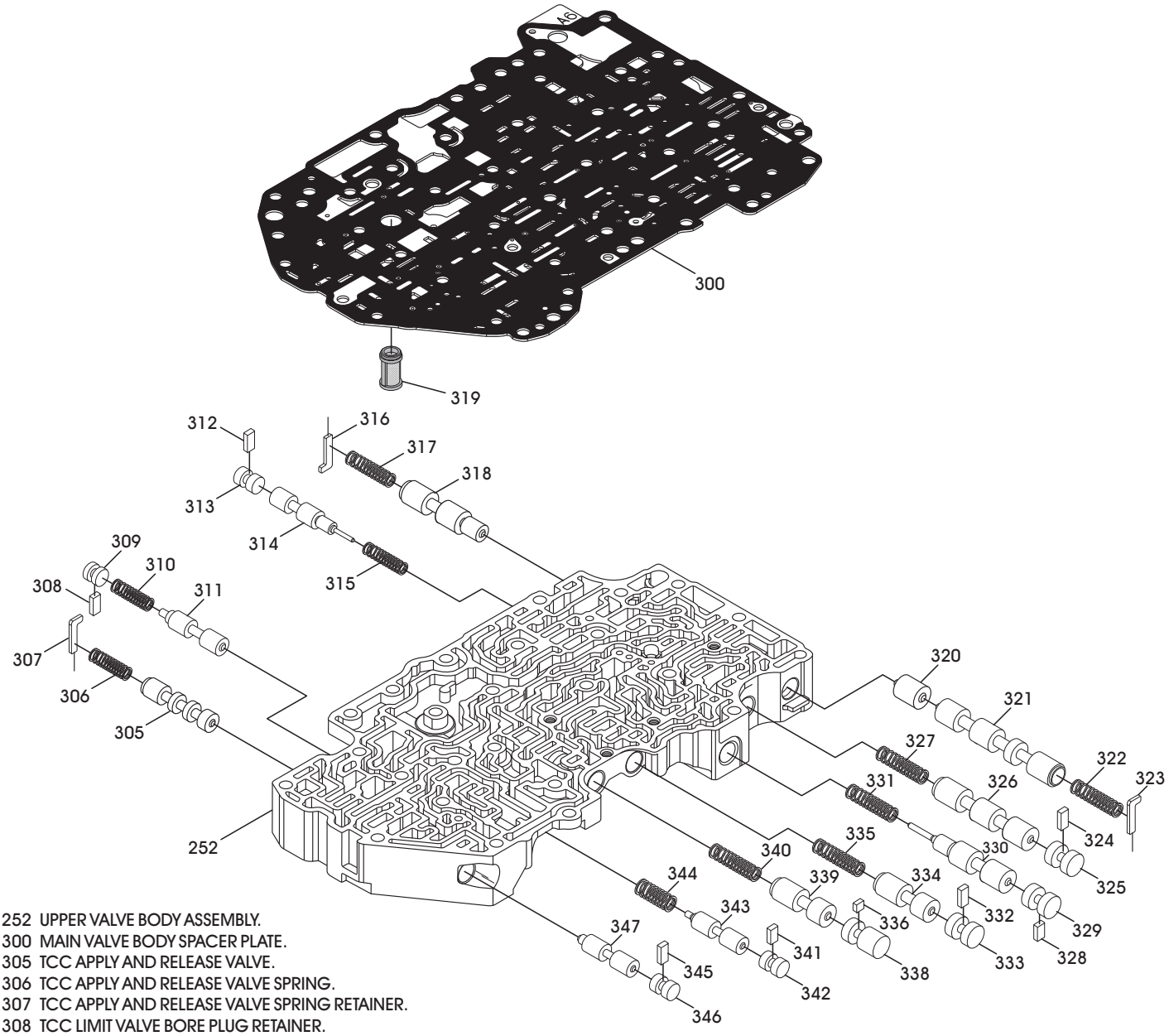

252 UPPER VALVE BODY ASSEMBLY.
300 MAIN VALVE BODY SPACER PLATE.
305 TCC APPLY AND RELEASE VALVE.
306 TCC APPLY AND RELEASE VALVE SPRING.
307 TCC APPLY AND RELEASE VALVE SPRING RETAINER.
308 TCC LIMIT VALVE BORE PLUG RETAINER.
309 TCC LIMIT VALVE BORE PLUG.
310 TCC LIMIT VALVE SPRING.
311 TCC LIMIT VALVE.
312 NUMBER 14 VALVE BORE PLUG RETAINER.
313 NUMBER 14 VALVE BORE PLUG.
314 NUMBER 14 VALVE.
315 NUMBER 14 VALVE SPRING.
316 NUMBER 13 VALVE SPRING RETAINER.
317 NUMBER 13 VALVE SPRING.
318 NUMBER 13 VALVE.
319 SCREEN FOR BOTH SOLENOID REGULATOR VALVES.
320 K1, K2, K3, AND B2 CLUTCH RELAY VALVE PLUG.
321 K1, K2, K3, AND B2 CLUTCH RELAY VALVE.
322 K1, K2, K3, AND B2 CLUTCH RELAY VALVE SPRING.
323 K1, K2, K3, AND B2 CLUTCH RELAY VALVE SPRING RETAINER.
324 NUMBER 7 VALVE BORE PLUG RETAINER.
325 NUMBER 7 VALVE BORE PLUG.
326 NUMBER 7 VALVE.
327 NUMBER 7 VALVE SPRING.
328 NUMBER 8 VALVE BORE PLUG RETAINER.
329 NUMBER 8 VALVE BORE PLUG.
330 NUMBER 8 VALVE.
331 NUMBER 8 VALVE SPRING.
332 N88, 89, 90, 282, 283,SOLENOID FEED ACCUM. VALVE RETAINER.
333 N88, 89, 90, 282, 283,SOLENOID FEED ACCUM. VALVE BORE PLUG.
334 N88, 89, 90, 282, 283,SOLENOID FEED ACCUM. VALVE.
335 N88, 89, 90, 282, 283,SOLENOID FEED ACCUM. VALVE SPRING.
336 N91, N92, N93 SOLENOID FEED ACCUMULATOR VALVE RETAINER.
338 N91, N92, N93 SOLENOID FEED ACCUMULATOR VALVE BORE PLUG.
339 N91, N92, N93 SOLENOID FEED ACCUMULATOR VALVE.
340 N91, N92, N93 SOLENOID FEED ACCUMULATOR VALVE SPRING.
341 B2 SWITCH VALVE BORE PLUG RETAINER.
342 B2 SWITCH VALVE BORE PLUG.
343 B2 SWITCH VALVE.
344 B2 SWITCH VALVE SPRING.
345 NUMBER 12 VALVE BORE PLUG RETAINER.
346 NUMBER 12 VALVE BORE PLUG.
347 NUMBER 12 VALVE.

Copyright © 2010 ATSG

Figure 152

WWW.ALL-TRANS.BY

COMPONENT REBUILD (CONT'D)

VALVE BODY ASSEMBLY (CONT'D)

9. Disassemble upper valve body and place valves, springs and retainers on appropriate trays exactly as they were removed, as shown in Figure 152. Small parts are shown in Figure 153.
10. Clean all upper valve body parts thoroughly and dry with compressed air.
11. Inspect all upper valve body parts thoroughly for any wear and/or damage.
    Note: Sonnax® has several kits available for bore wear and restoring bore integrity.
12. Assemble the upper valve body parts ***exactly*** as shown in Figure 152, and lube with the proper ATF as they are installed.
    Note: Use a small amount of Trans-Jel® on the flat retainers, to prevent them from falling out, as all valves are not spring loaded.
13. Install the worm track small parts into the upper valve body exactly as shown in Figure 153.
    Note: VW check valve diameters are provided in Figure 153 legend. Spring specs are not provided as they vary by model.

Continued on Page 94

"09G" UPPER VALVE BODY SMALL PARTS, EXPLODED VIEW

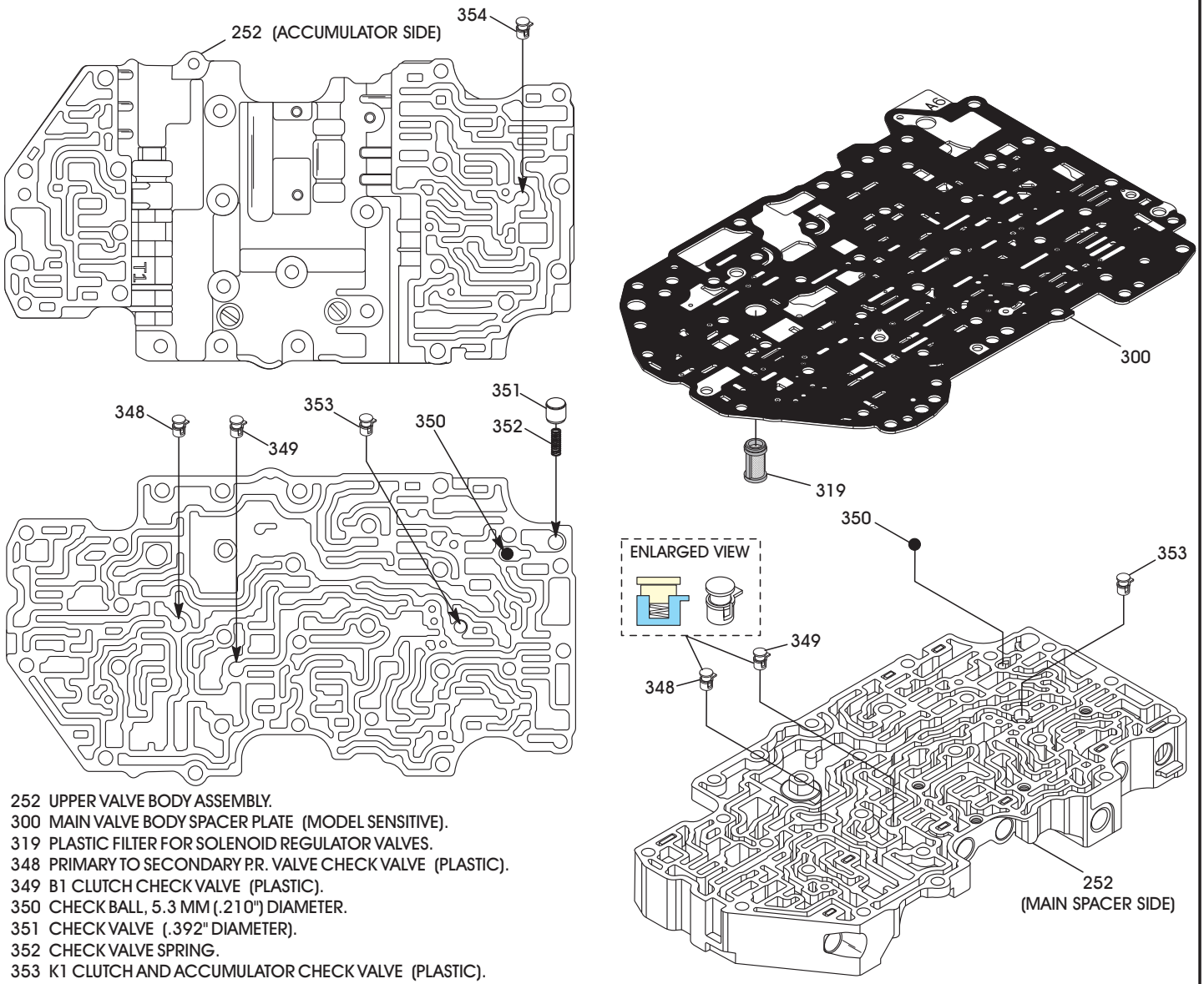

252 UPPER VALVE BODY ASSEMBLY.
300 MAIN VALVE BODY SPACER PLATE (MODEL SENSITIVE).
319 PLASTIC FILTER FOR SOLENOID REGULATOR VALVES.
348 PRIMARY TO SECONDARY P.R. VALVE CHECK VALVE (PLASTIC).
349 B1 CLUTCH CHECK VALVE (PLASTIC).
350 CHECK BALL, 5.3 MM (.210") DIAMETER.
351 CHECK VALVE (.392" DIAMETER).
352 CHECK VALVE SPRING.
353 K1 CLUTCH AND ACCUMULATOR CHECK VALVE (PLASTIC).
354 K3 CLUTCH AND ACCUMULATOR CHECK VALVE (PLASTIC).
NOTE: SMALL PLASTIC CHECK VALVES INCLUDED IN TRANS-TEC® KIT.

Copyright © 2010 ATSG

Figure 153

WWW.ALL-TRANS.BY

VALVE BODY ASSEMBLY (CONT'D)

14. Install the plastic filter into the valve body spacer plate, as shown in Figure 154, with the open end towards spacer plate.
    Note: Gaskets are moulded to all spacer plates.
15. Temporarily install two of the long accumulator housing bolts through bottom of upper valve body, as shown in Figure 154, for alignment of the spacer plate.
16. With all small parts in place, carefully install the spacer plate and filter assembly over alignment bolts, as shown in Figure 154.
17. Place the completed lower valve body on a flat work surface with an appropriate size block to hold the lower valve body level, as shown in Figure 155.
18. Install two "manufactured" (4T60-E pump bolt) alignment dowels in the positions shown in Figure 155.
19. Clamp the spacer plate to upper valve body with your hands and very carefully turn the assembly over, as shown in Figure 155.
20. With the small parts installed in the lower valve body, hands clamping small parts in place in the upper valve body, very carefully install the upper valve body and spacer plate over the alignment dowels and onto the lower valve body, as shown in Figure 155.

Continued on Page 95

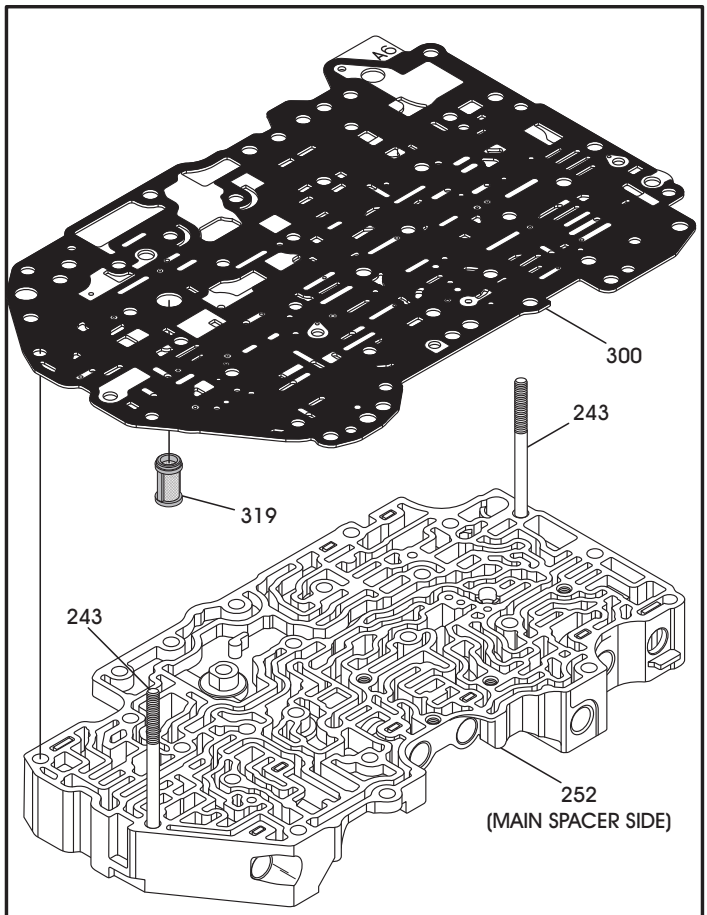

243 ACCUMULATOR 2 HOUSING TO UPPER V.B. (64 MM LENGTH)
252 UPPER VALVE BODY ASSEMBLY.
300 MAIN VALVE BODY SPACER PLATE.
319 PLASTIC FILTER FOR SOLENOID REGULATOR VALVES.

Copyright © 2010 ATSG

Figure 154

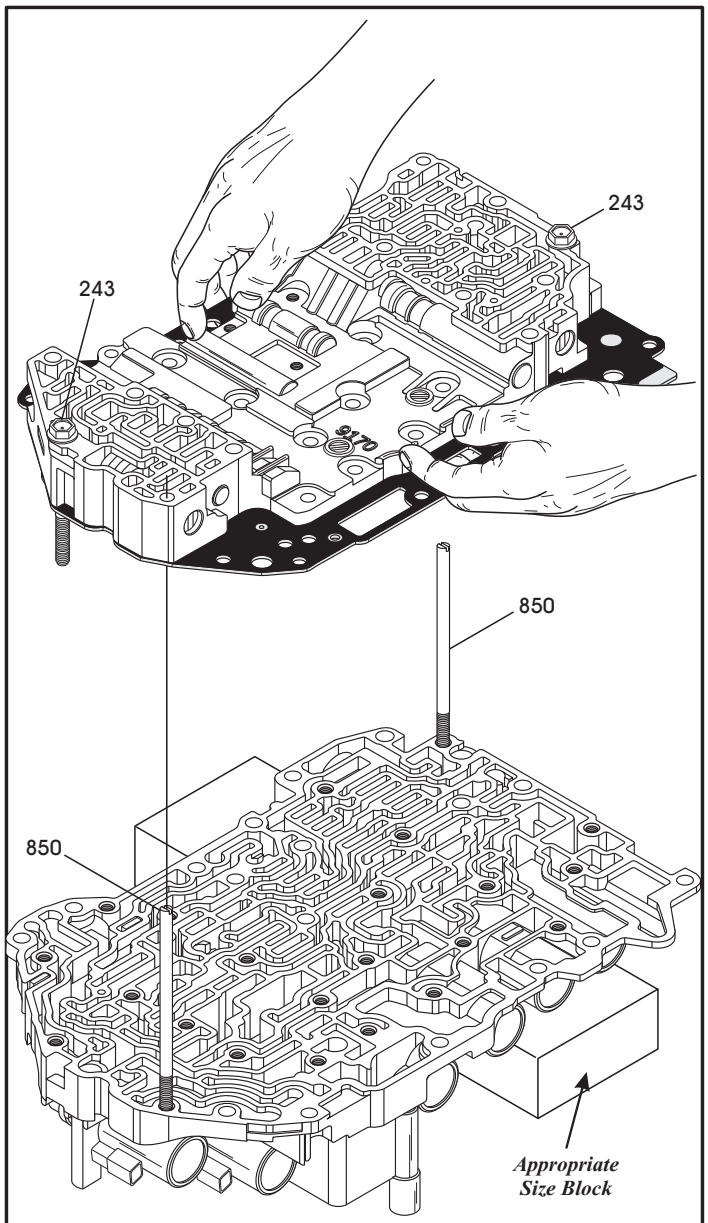

243 ACCUMULATOR 2 HOUSING TO UPPER V.B. (64 MM LENGTH)
850 'MANUFACTURED" (4T60-E PUMP BOLTS) ALIGNMENT DOWELS.

Copyright © 2010 ATSG

Figure 155

WWW.ALL-TRANS.BY

COMPONENT REBUILD (CONT'D)

VALVE BODY ASSEMBLY (CONT'D)

21. As you lower the upper valve body and spacer plate assembly into place, temporarily installed accumulator bolts will start to automatically start to move out, as shown in Figure 156.
22. With all of temporary alignment dowels still in place, hold upper valve body and spacer plate against the lower valve body, ensuring all small parts are in place, and then install ten retaining bolts, as shown in Figure 156.
    Note: "Snug" the bolts only, at this time.
23. Start the two temporary accumulator bolts into the threads below.
24. With all alignment dowels in place, torque the 10 installed valve body bolts to 9 N·m (80 in.lb.), as shown in Figure 157, beginning in the center and working outward in a circle.
25. Remove the four alignment dowels and install plastic check valve in the upper valve body, as shown in Figure 158.

Continued on Page 96

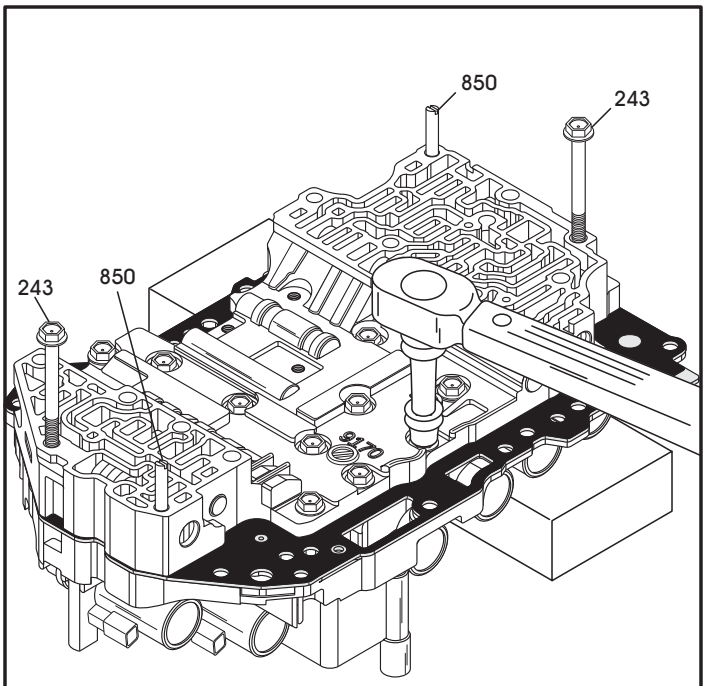

243 ACCUMULATOR 2 HOUSING TO UPPER V.B. (64 MM LENGTH)
850 'MANUFACTURED" ALIGNMENT DOWELS.

Copyright © 2010 ATSG

Figure 157

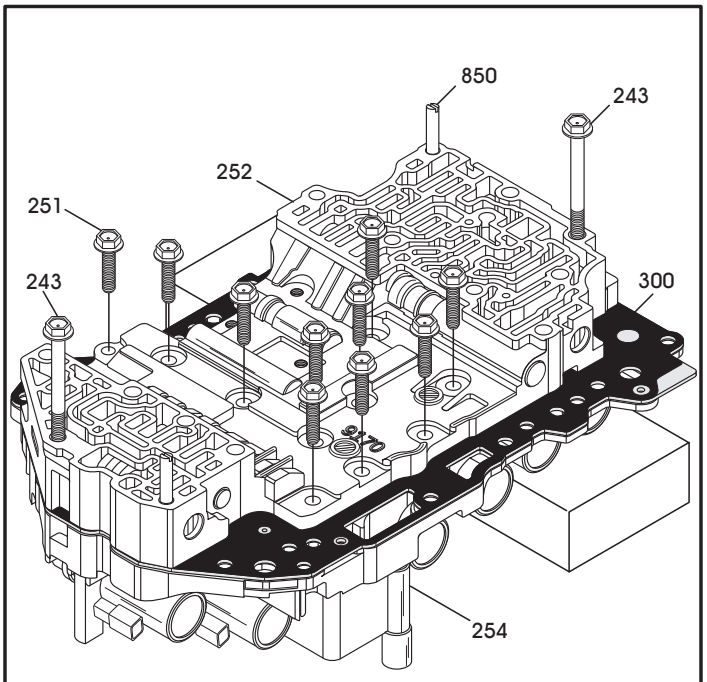

251 UPPER V.B. TO LOWER V.B. BOLTS (21 MM LENGTH)(10 REQUIRED).
252 UPPER VALVE BODY ASSEMBLY.
254 LOWER VALVE BODY ASSEMBLY.
300 MAIN VALVE BODY SPACER PLATE.
850 'MANUFACTURED" (440-T4 PUMP BOLTS) ALIGNMENT DOWELS.

Copyright © 2010 ATSG

Figure 156

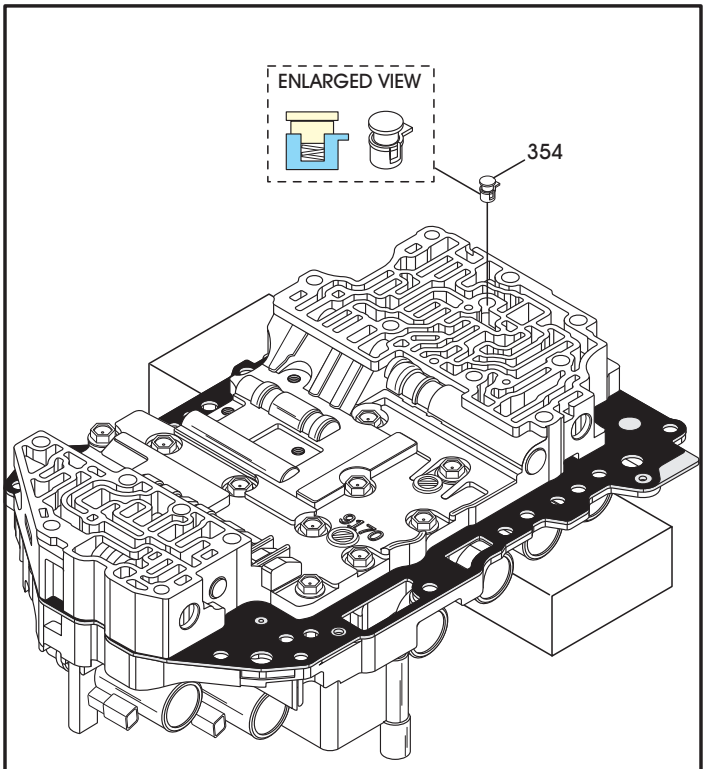

354 K3 CLUTCH AND ACCUMULATOR CHECK VALVE (PLASTIC).

Copyright © 2010 ATSG

Figure 158

WWW.ALL-TRANS.BY

COMPONENT REBUILD (CONT'D)

VALVE BODY ASSEMBLY (CONT'D)

26. Disassemble the accumulator 1 valve body and place valves, springs and retainers on appropriate trays exactly as they were removed, as shown in Figure 159.
    Note: All accumulator body pistons are the same, but the accumulator springs should be tagged for identification.
27. Clean all accumulator body parts thoroughly and dry with compressed air.
28. Inspect all accumulator body parts thoroughly for any wear and/or damage.
29. Assemble the valves, springs, bore plugs and retainers exactly as shown in Figure 159, and lube with proper ATF as they are installed.
    Note: Use small amount of Trans-Jel® on the flat retainers, to prevent them from falling out, as all valves are not spring loaded.

Continued on Page 97

"09G" ACCUMULATOR 1, EXPLODED VIEW

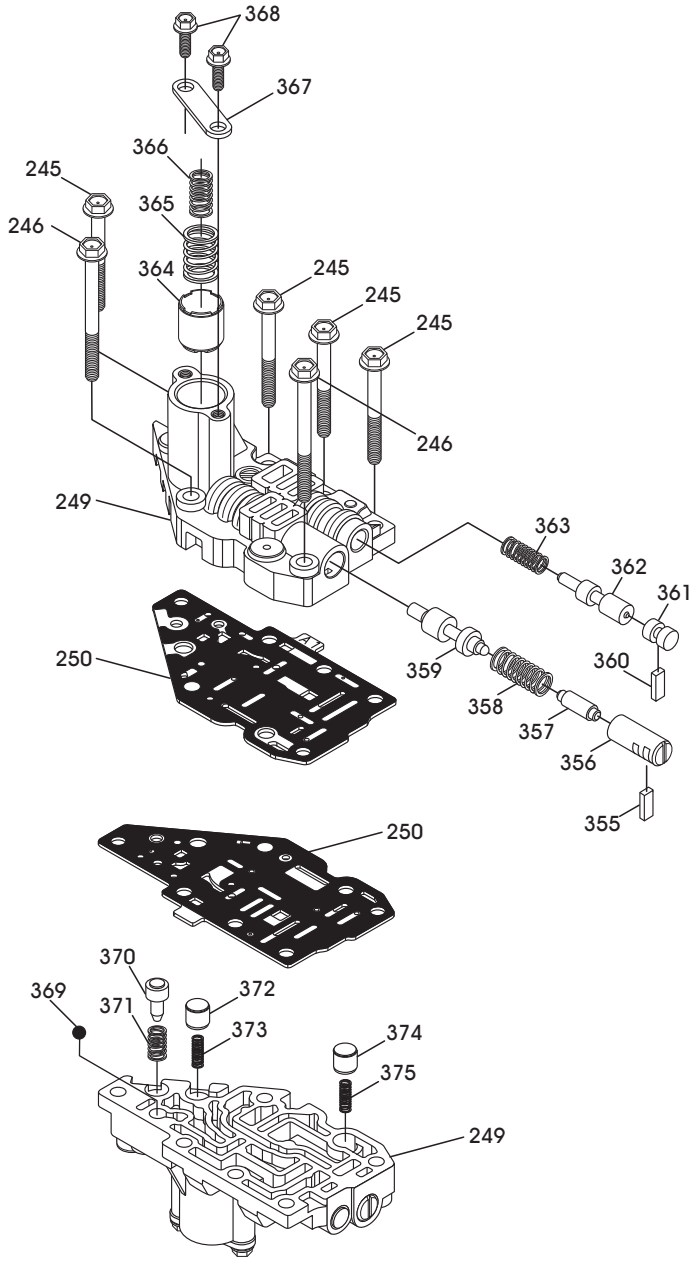

245 ACCUMULATOR-1 HOUSING TO UPPER V.B. (52 MM LENGTH)(4 REQ).
246 ACCUMULATOR-1 HOUSING TO UPPER V.B. (64 MM LENGTH)(2 REQ).
249 ACCUMULATOR-1 HOUSING ASSEMBLY.
250 ACCUMULATOR-1 ASSEMBLY SPACER PLATE.
355 TCC REGULATOR BOOST VALVE SLEEVE RETAINER.
356 TCC REGULATOR BOOST VALVE SLEEVE.
357 TCC REGULATOR BOOST VALVE.
358 TCC REGULATOR VALVE SPRING.
359 TCC REGULATOR VALVE.
360 SOLENOID REGULATOR VALVE BORE PLUG RETAINER.
361 SOLENOID REGULATOR VALVE BORE PLUG.
362 SOLENOID REGULATOR VALVE FOR N91, N92, N93.
363 SOLENOID REGULATOR VALVE SPRING.
364 LINE PRESSURE ACCUMULATOR PISTON.
365 LINE PRESSURE ACCUMULATOR PISTON OUTER SPRING.
366 LINE PRESSURE ACCUMULATOR PISTON INNER SPRING.
367 LINE PRESSURE ACCUMULATOR SPRING RETAINER PLATE.
368 ACCUMULATOR PISTON RETAINER BOLTS (11 MM LENGTH).
369 CHECK BALL, 5.3 MM (.210") DIAMETER.
370 PRESSURE CONTROL SOLENOID (N93) LIMIT VALVE.
371 PRESSURE CONTROL SOLENOID (N93) LIMIT VALVE SPRING.
372 B1 CLUTCH PRESSURE LIMIT VALVE (.392" DIAMETER).
373 B1 CLUTCH PRESSURE LIMIT VALVE SPRING.
374 COOLER PRESSURE LIMIT VALVE (.392" DIAMETER).
375 COOLER PRESSURE LIMIT VALVE SPRING.

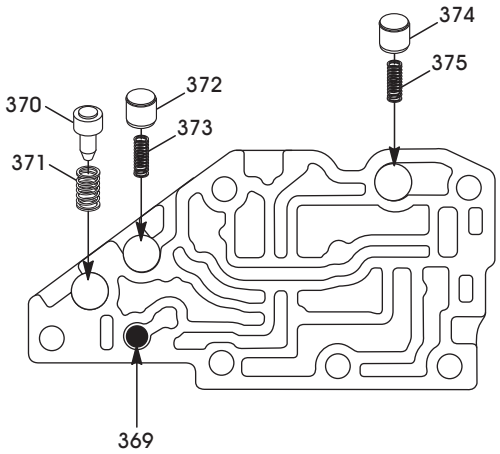

Copyright © 2010 ATSG

Figure 159

WWW.ALL-TRANS.BY

COMPONENT REBUILD (CONT'D)

VALVE BODY ASSEMBLY (CONT'D)

30. The TCC regulator boost valve sleeve has a slot for the retainer on only one side of the sleeve, as shown in Figure 160, and must be rotated to the proper position to accept the retainer.
31. Turn the accumulator body over and install the check valves and the check ball, as shown in Figure 159.
32. With the small parts in place, install the spacer plate onto the accumulator body, as shown in Figure 159.
33. Again using your hand as a clamp, hold spacer plate against the accumulator body, turn the assembly over and install it onto upper valve body, as shown in Figure 161, and install proper retaining bolts.
    Note: Valve body bolt lengths are shown in the legend.
34. Just "snug" the retaining bolts at this time, as shown in Figure 162.

Continued on Page 99

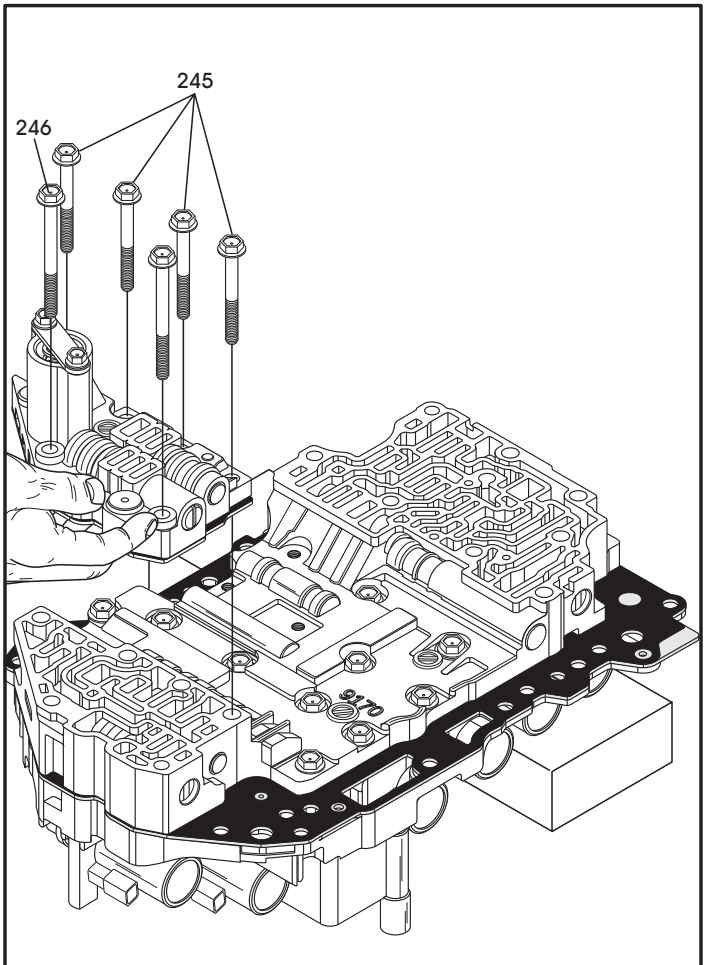

245 ACCUMULATOR-1 HOUSING TO UPPER V.B. (52 MM LENGTH)(4 REQ).
246 ACCUMULATOR-1 HOUSING TO UPPER V.B. (64 MM LENGTH)(2 REQ).

Copyright © 2010 ATSG

Figure 161

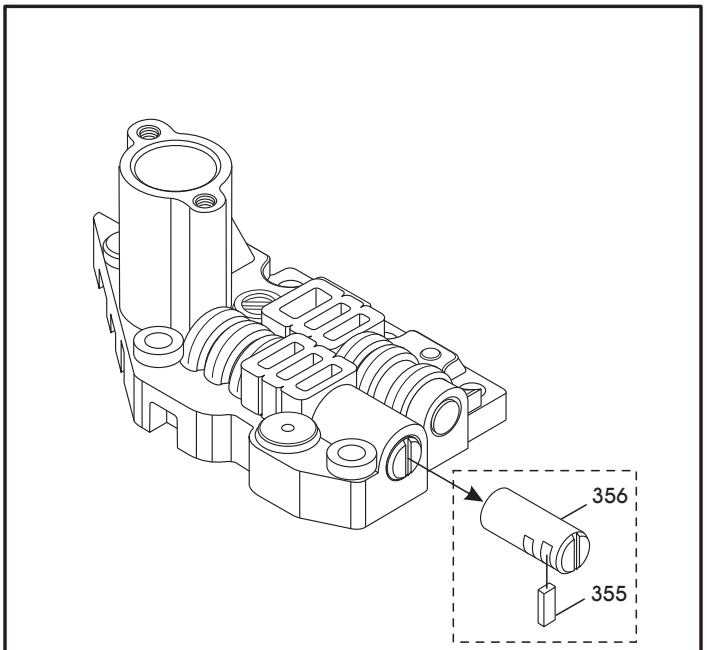

355 TCC REGULATOR BOOST VALVE SLEEVE RETAINER.
356 TCC REGULATOR BOOST VALVE SLEEVE.

Copyright © 2010 ATSG

Figure 160

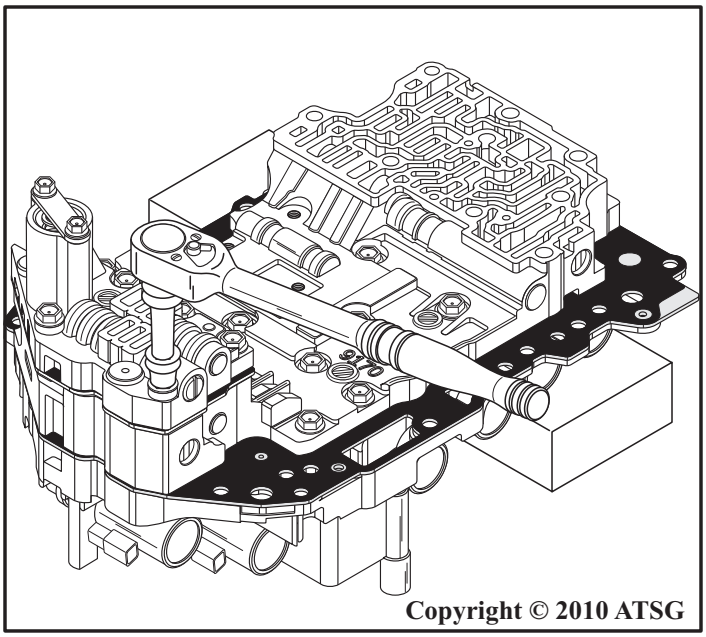

Copyright © 2010 ATSG

Figure 162

WWW.ALL-TRANS.BY

"09G" ACCUMULATOR 2, EXPLODED VIEW

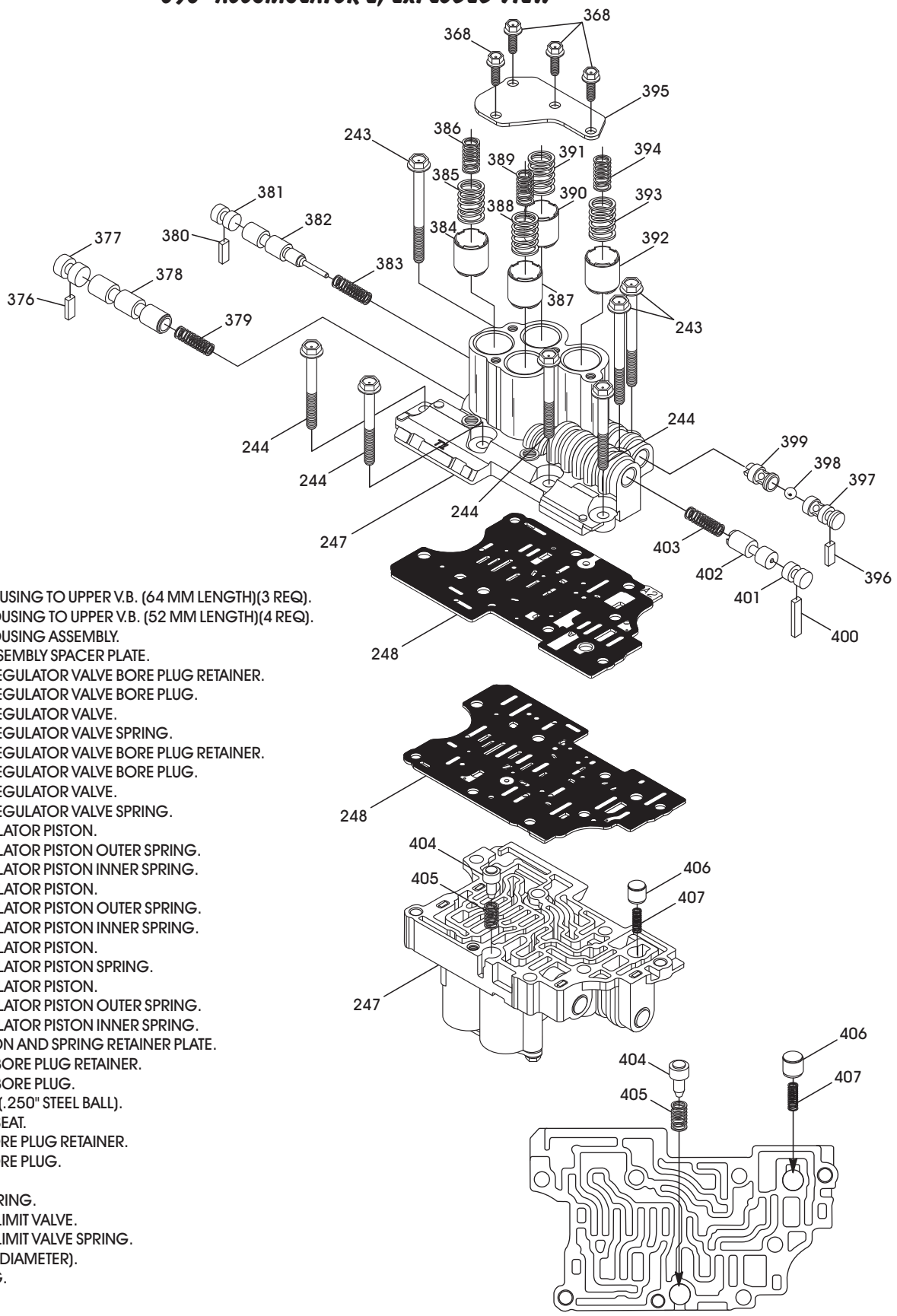

243 ACCUMULATOR 2 HOUSING TO UPPER V.B. (64 MM LENGTH)(3 REQ).
244 ACCUMULATOR-2 HOUSING TO UPPER V.B. (52 MM LENGTH)(4 REQ).
247 ACCUMULATOR-2 HOUSING ASSEMBLY.
248 ACCUMULATOR-2 ASSEMBLY SPACER PLATE.
376 K3 ACCUMULATOR REGULATOR VALVE BORE PLUG RETAINER.
377 K3 ACCUMULATOR REGULATOR VALVE BORE PLUG.
378 K3 ACCUMULATOR REGULATOR VALVE.
379 K3 ACCUMULATOR REGULATOR VALVE SPRING.
380 K1 ACCUMULATOR REGULATOR VALVE BORE PLUG RETAINER.
381 K1 ACCUMULATOR REGULATOR VALVE BORE PLUG.
382 K1 ACCUMULATOR REGULATOR VALVE.
383 K1 ACCUMULATOR REGULATOR VALVE SPRING.
384 B2 CLUTCH ACCUMULATOR PISTON.
385 B2 CLUTCH ACCUMULATOR PISTON OUTER SPRING.
386 B2 CLUTCH ACCUMULATOR PISTON INNER SPRING.
387 K3 CLUTCH ACCUMULATOR PISTON.
388 K3 CLUTCH ACCUMULATOR PISTON OUTER SPRING.
389 K3 CLUTCH ACCUMULATOR PISTON INNER SPRING.
390 K1 CLUTCH ACCUMULATOR PISTON.
391 K1 CLUTCH ACCUMULATOR PISTON SPRING.
392 K2 CLUTCH ACCUMULATOR PISTON.
393 K2 CLUTCH ACCUMULATOR PISTON OUTER SPRING.
394 K2 CLUTCH ACCUMULATOR PISTON INNER SPRING.
395 ACCUMULATOR PISTON AND SPRING RETAINER PLATE.
396 B1/K3 CHECK VALVE BORE PLUG RETAINER.
397 B1/K3 CHECK VALVE BORE PLUG.
398 B1/K3 CHECK VALVE (.250" STEEL BALL).
399 B1/K3 CHECK VALVE SEAT.
400 NUMBER 20 VALVE BORE PLUG RETAINER.
401 NUMBER 20 VALVE BORE PLUG.
402 NUMBER 20 VALVE.
403 NUMBER 20 VALVE SPRING.
404 MAIN LINE PRESSURE LIMIT VALVE.
405 MAIN LINE PRESSURE LIMIT VALVE SPRING.
406 CHECK VALVE (.392" DIAMETER).
407 CHECK VALVE SPRING.

Copyright © 2010 ATSG

Figure 163

WWW.ALL-TRANS.BY

COMPONENT REBUILD (CONT'D)

VALVE BODY ASSEMBLY (CONT'D)

35. Disassemble the accumulator 2 valve body and place valves, springs and retainers on appropriate trays exactly as they were removed, as shown in Figure 163.
    Note: All accumulator body pistons are the same, but the accumulator springs should be tagged for identification.
36. Clean all accumulator body parts thoroughly and dry with compressed air.
37. Inspect all accumulator body parts thoroughly for any wear and/or damage.
38. Assemble the valves, springs, bore plugs and retainers exactly as shown in Figure 163, and lube with proper ATF as they are installed.
    Note: Use small amount of Trans-Jel® on the flat retainers, to prevent them from falling out, as all valves are not spring loaded.
39. Install the accumulator pistons and springs, as shown in Figure 163, install the retainer plate and "snug" the bolts at this time.
40. Turn the accumulator body over and install the check valves, as shown in Figure 163.
41. With the small parts in place, install the spacer plate onto the accumulator 2 body, as shown in Figure 163.
42. Again using your hand as a clamp, hold spacer plate against the accumulator body, turn the assembly over and install it onto upper valve body, as shown in Figure 164, and install proper retaining bolts.
43. Torque all accumulator housing retaining bolts on both accumulator housings as follows:
    Retaining Bolts = 9 N·m (80 in.lb.).
    Piston Retainer Bolts = 7 N·m (62 in.lb.).

Continued on Page 100

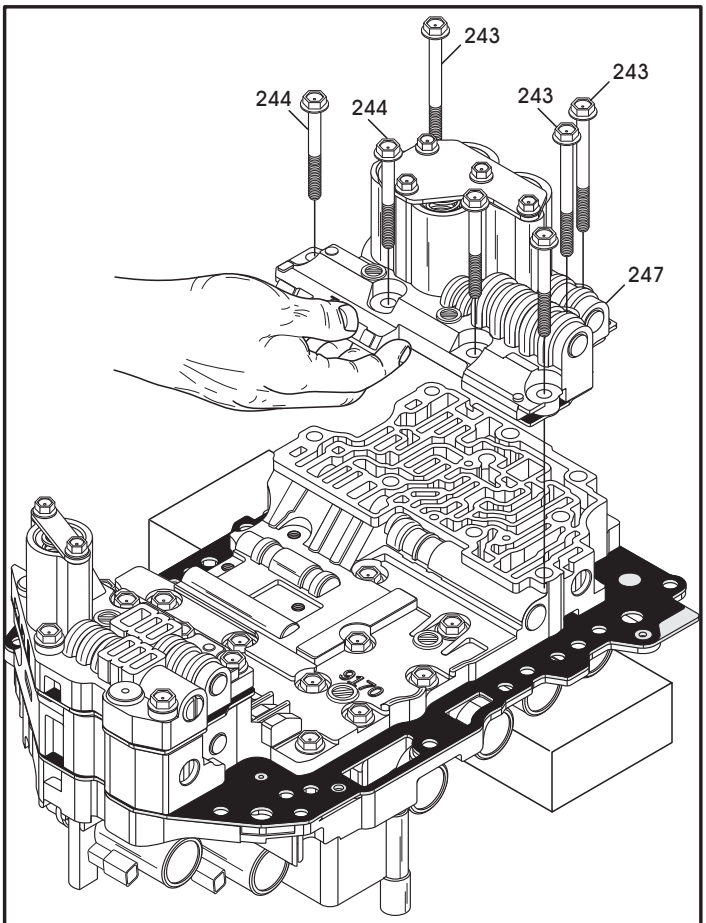

243 ACCUMULATOR 2 HOUSING TO UPPER V.B. (64 MM LENGTH)(3 REQ).
244 ACCUMULATOR-2 HOUSING TO UPPER V.B. (52 MM LENGTH)(4 REQ).
247 ACCUMULATOR-2 HOUSING AND SPACER PLATE ASSEMBLY.

Copyright © 2010 ATSG

Figure 164

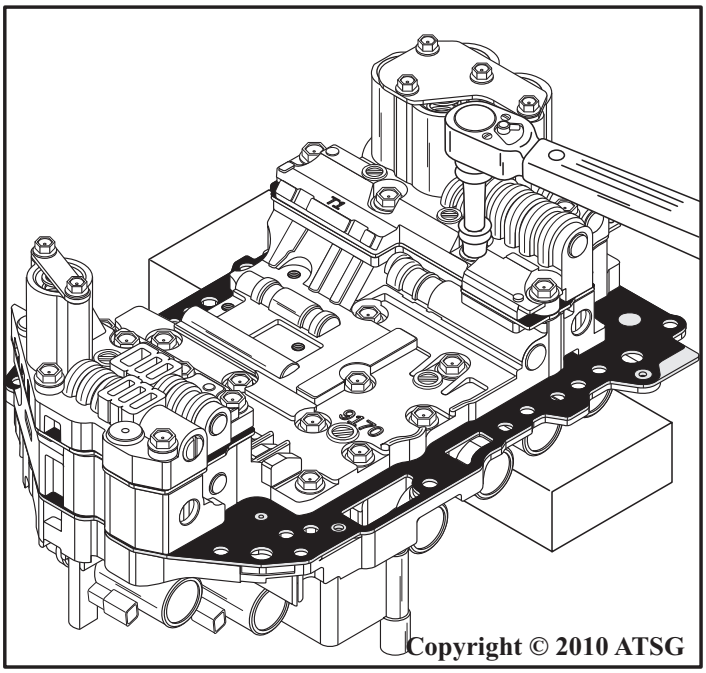

Copyright © 2010 ATSG

Figure 165

WWW.ALL-TRANS.BY

COMPONENT REBUILD (CONT'D)

VALVE BODY ASSEMBLY (CONT'D)

44. Turn the valve body assembly over, as shown in Figure 166, and install the five lower valve body to upper valve body retaining bolts.
45. Torque lower valve body to upper valve body bolts to 9 N·m (80 in.lb.).
46. Set the completed valve body assembly aside for the final assembly process.

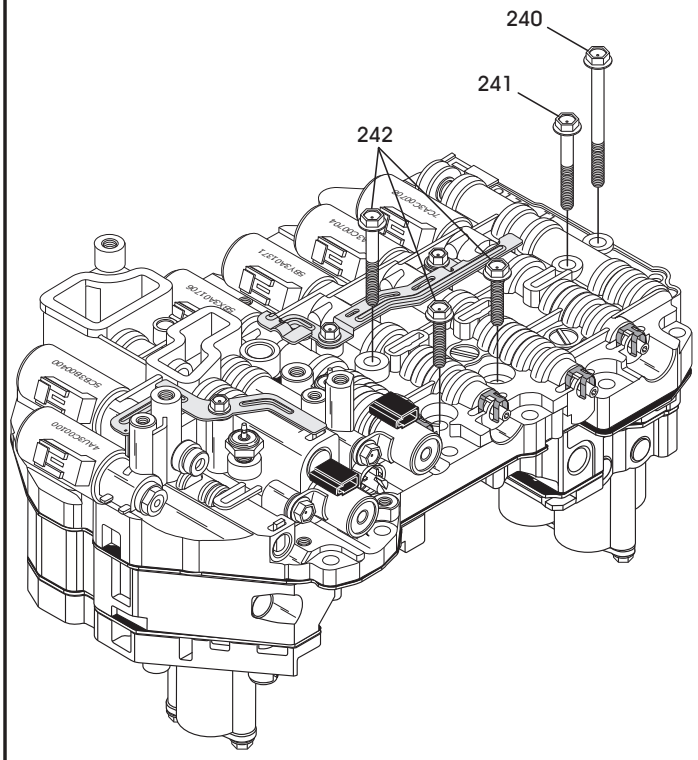

240 LOWER V.B. TO ACCUMULATOR HOUSING 2 BOLT (70 MM LENGTH).
241 LOWER V.B. TO UPPER V.B. BOLT (39.5 MM LENGTH).
242 LOWER V.B. TO UPPER V.B. BOLT (28 MM LENGTH).

Copyright © 2010 ATSG

Figure 166

TRANSAXLE FINAL ASSEMBLY

1. Position transaxle case as shown in Figure 167 and ensure number 11 thrust bearing race is still installed in case.
   Note: The B2 clutch piston, return spring and snap ring should have been installed during case component rebuild.
2. Ensure number 9 thrust bearing and race are still in place and number 11 thrust bearing is still in place on the K2 clutch housing and install the completed K2 clutch housing into the transaxle case, as shown in Figure 167.

Continued on Page 101

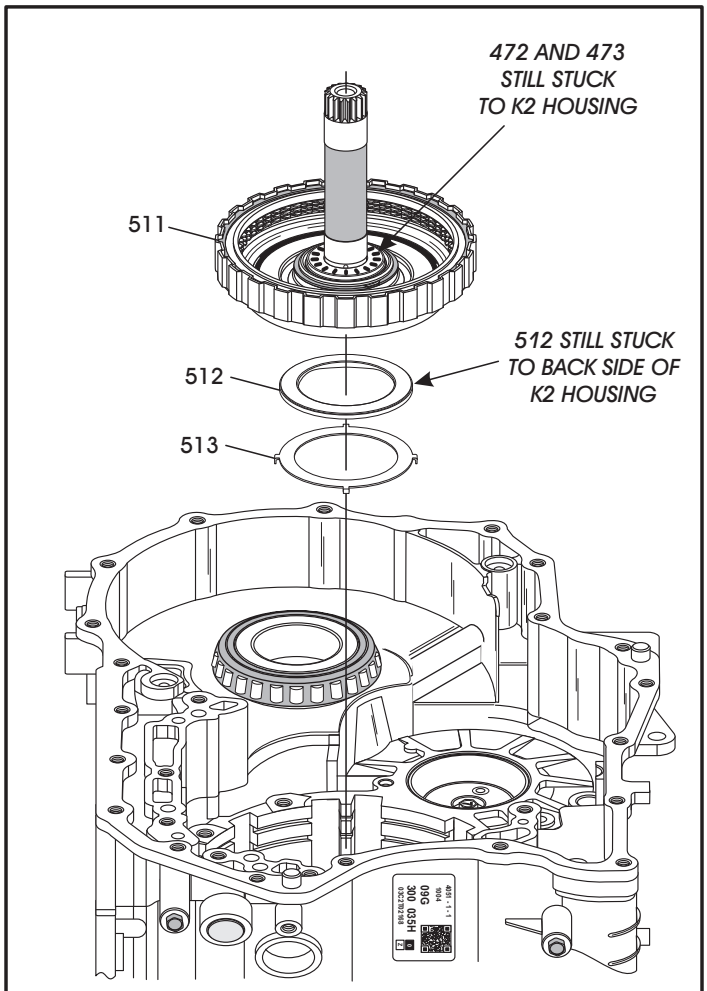

472 NUMBER 9 THRUST BEARING.
473 NUMBER 9 "REAR" THRUST BEARING RACE.
511 K2 CLUTCH HOUSING ASSEMBLY.
512 NUMBER 11 THRUST BEARING.
513 NUMBER 11 THRUST BEARING RACE.

Copyright © 2010 ATSG

Figure 167

WWW.ALL-TRANS.BY

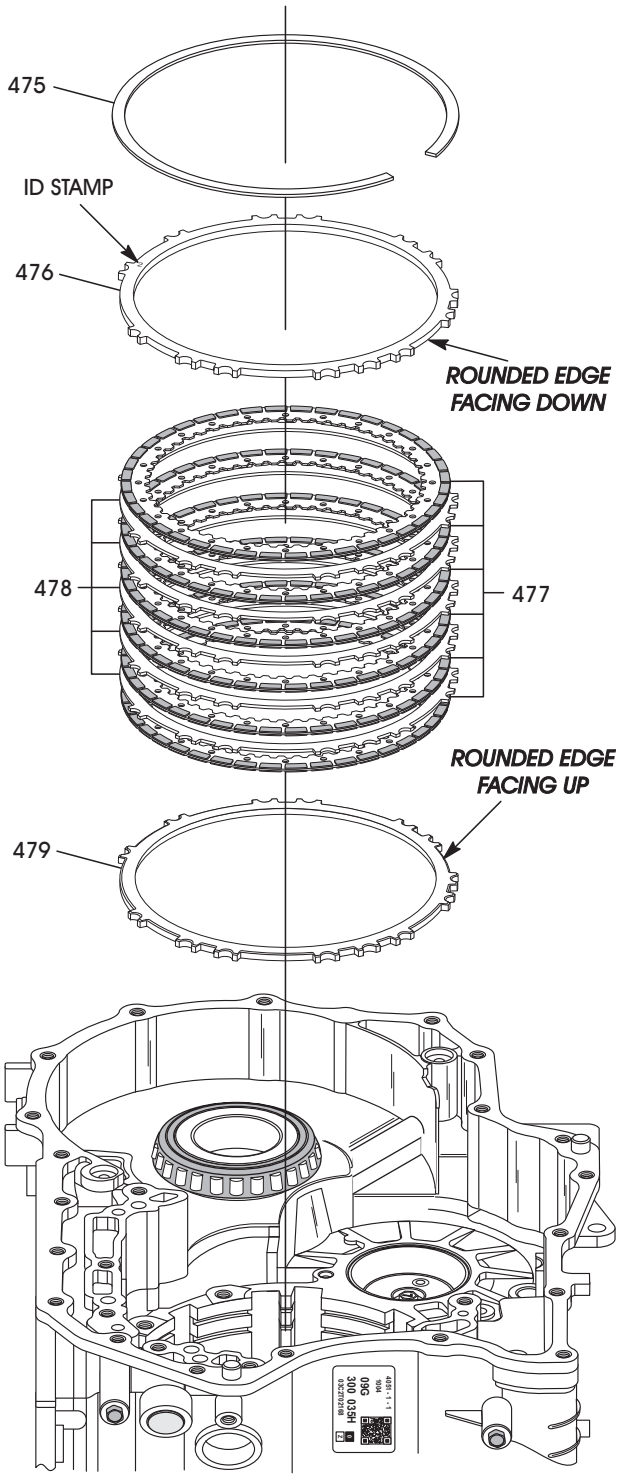

475 B2 CLUTCH BACKING PLATE SNAP RING (.064" THICKNESS).
476 B2 CLUTCH BACKING PLATE, STAMP "2", 3.6 MM (.142") THICK.
477 B2 CLUTCH FRICTION PLATES (QUANTITY MAY VARY).
478 B2 CLUTCH STEEL PLATES, 1.8 MM (.071") (QTY MAY VARY).
479 B2 CLUTCH APPLY PLATE, 3.0 MM (.119") THICK.

Copyright © 2010 ATSG

Figure 168

TRANSAXLE FINAL ASSEMBLY (CONT'D)

3. Install the B2 clutch apply plate, as shown in Figure 168, with the rounded edge facing up.
4. Install B2 clutch pack beginning with a friction plate onto the apply plate and alternating with a steel plate, as shown in Figure 168, until you have installed the proper quantity, as quantity may vary.
   Note: All friction plates should be soaked in proper fluid for 30 minutes before installing.
5. Install the B2 clutch backing plate on top of the last friction, as shown in Figure 168, with the rounded edge facing the friction.
   Note: Notice the number stamped on top side of backing plate, which is an indicator that it is selective, but no selectives available as yet.
6. Install the B2 clutch backing plate snap ring, as shown in Figure 168, with snap ring opening toward the transfer bearing race.
   Note: This snap ring is .064" in thickness.
7. Apply air pressure to the B2 clutch circuit, as shown in Figure 169, to test the integrity and this will also move the snap ring to top of the snap ring groove in case, to prepare for measurement of B2 clutch clearance.

Continued on Page 102

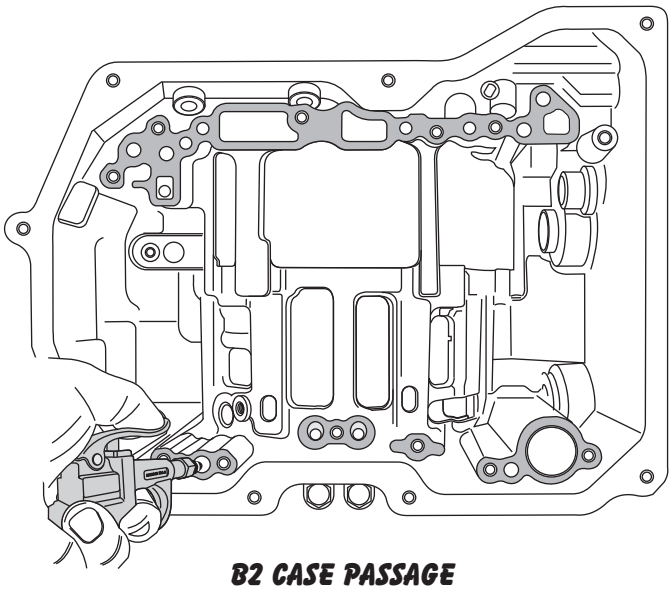

B2 CASE PASSAGE

Copyright © 2010 ATSG

Figure 169

WWW.ALL-TRANS.BY

TRANSAXLE FINAL ASSEMBLY (CONT'D)

8. Measure the B2 clutch clearance with a feeler gauge between the backing plate and friction plate, as shown in Figure 170.
   Note: There are no factory clutch clearance specifications available, but the clearances were the "traditional" .010" per friction plate through-out this unit. Refer to Figure 170 for B2 clutch clearance with 6 frictions.
9. Install the pre-assembled F1 roller clutch and rear planetary gear set, as shown in Figure 171, by rotating back and forth until fully seated.
   Note: The F1 roller clutch outer race lugs go into case in only one position. The rear planet must be rotated to engage the K2 clutch plates and the B2 clutch plates. The assembly is fully seated when the snap ring groove is visable.
10. Once the assembly is fully seated, remove the vice-grips and install F1 roller clutch snap ring, as shown in Figure 171, with snap ring opening toward the transfer gear bearing race.
    Note: This snap is .048" in thickness.

CAUTION: After installation, with your fingers in the planetary carrier pockets, the carrier should freewheel in a clockwise direction and lock in a counter-clockwise direction (See Figure 171).

Continued on Page 103

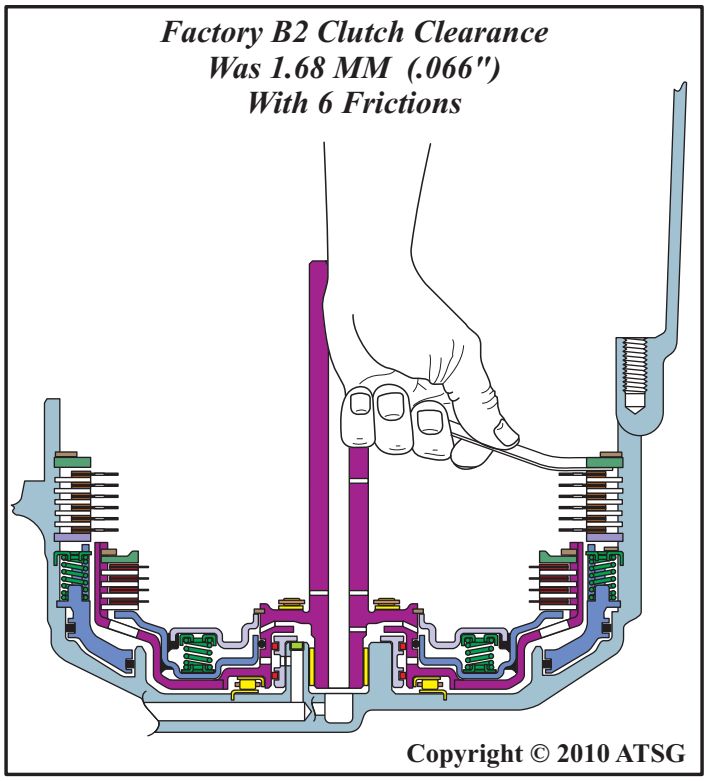

Figure 170

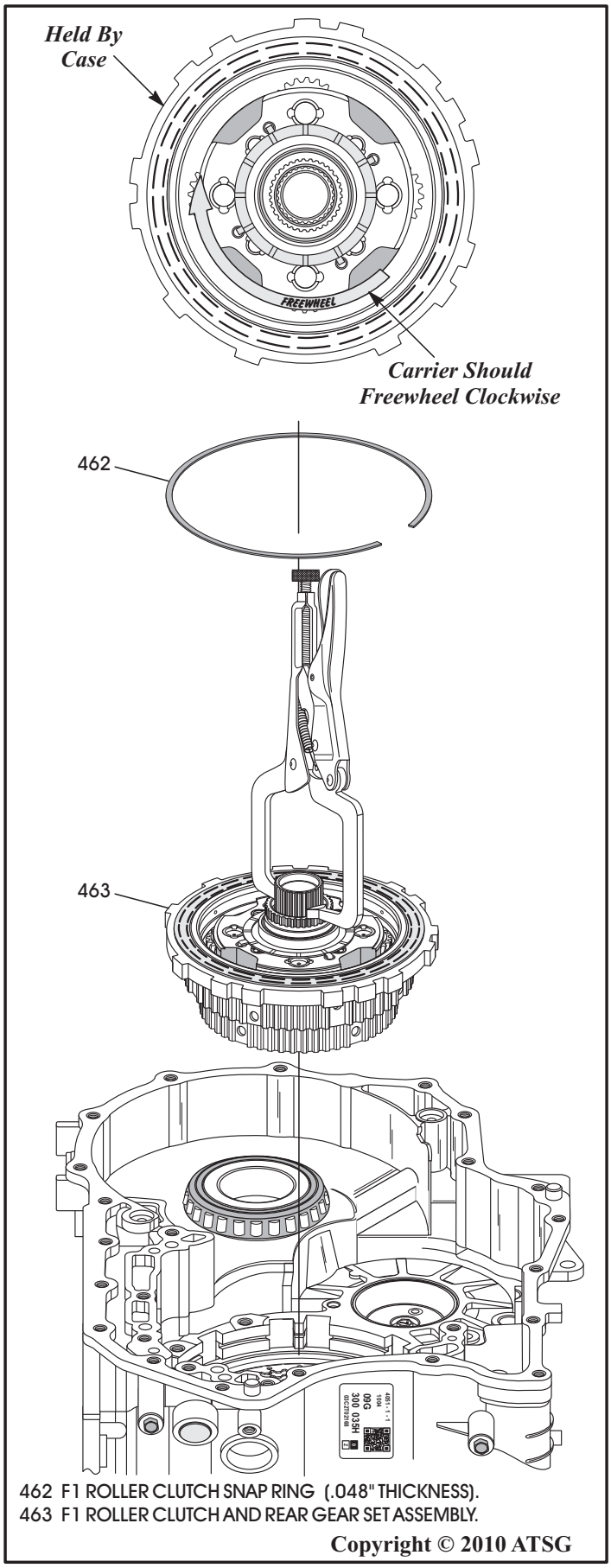

Figure 171

WWW.ALL-TRANS.BY

TRANSAXLE FINAL ASSEMBLY (CONT'D)

11. Install the completed center support assembly, as shown in Figure 172, by rotating back and forth into position.
12. Install five of the six center support retaining shown in Figure 172, and hand tighten only the five installed bolts.
    Note: The sixth bolt cannot be installed until the park rod guide is installed, as the guide must go under the parking pawl. We will install the last bolt and torque all bolts, after the park rod guide is installed.
13. Install the completed final drive assembly, as shown in Figure 173.
14. Install the completed transfer gear/pinion gear assembly, as shown in Figure 173.

Continued on Page 104

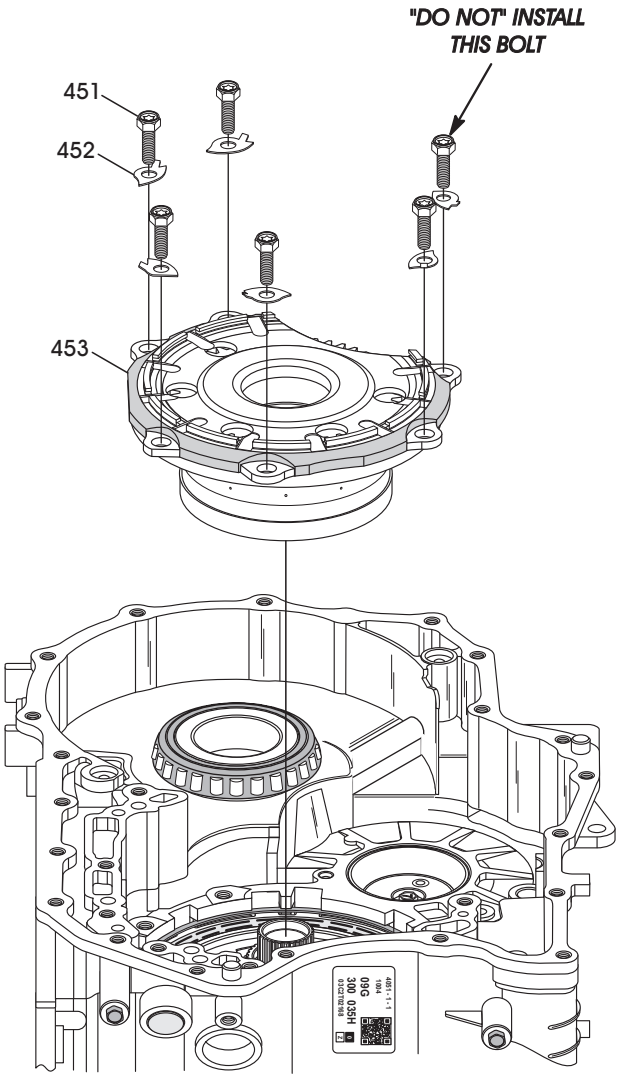

451 CENTER SUPPORT RETAINING BOLTS (6 REQUIRED).
452 CENTER SUPPORT BOLT LOCKING TABS (6 REQUIRED).
453 CENTER SUPPORT ASSEMBLY.

Copyright © 2010 ATSG

Figure 172

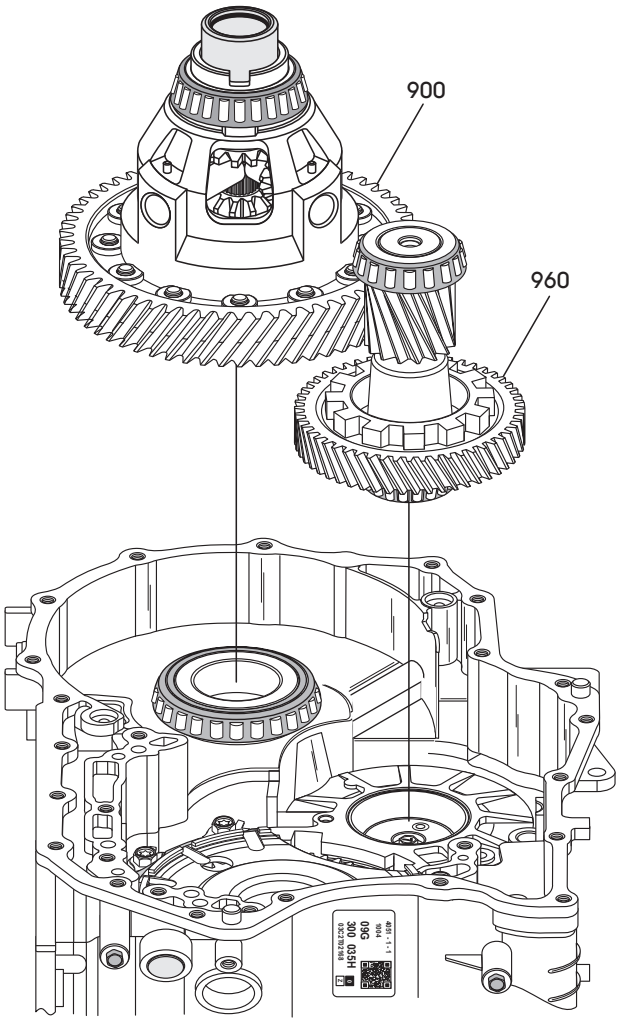

900 FINAL DRIVE ASSEMBLY.
960 TRANSFER DRIVEN GEAR AND PINION GEAR ASSEMBLY.

Copyright © 2010 ATSG

Figure 173

WWW.ALL-TRANS.BY

TRANSAXLE FINAL ASSEMBLY (CONT'D)

15. Install the parking pawl into the slot in transaxle case, as shown in Figure 174 and 175.
16. Install the parking pawl pivot pin through access hole in rear of case, as shown in Figure 176, using a small magnet.
17. Install new "O" ring onto parking pawl pivot pin case plug, as shown in Figure 176.
18. Install the parking pawl pivot pin case plug and torque to 14 N·m (10 ft.lb.), using a 55 Torx bit.
19. Install the park rod roller and pin assembly into case bore, as shown in Figure 174.
20. Install the inside detent spring (if removed), as shown in Figure 176.
21. Torque the inside detent spring retaining bolt to 14 N·m (10 ft.lb.), using a 30 Torx bit.
22. Install the park pawl anti-rattle pivot pin and spring, as shown in Figure 174.
    Note: Parking pawl anti-rattle spring gets hooked on bottom side of the parking pawl, as shown in Figure 175.
23. Install the park rod guide and park pawl return spring assembly, as shown in Figure 175 & 176.
    Note: Parking pawl return spring hooks in the hole in parking pawl, as shown in Figure 175.
24. Torque park rod guide bolts to 14 N·m (10 ft.lb.).
    Note: Do Not install the manual shaft yet.
25. Now install the last center support retaining bolt, as shown in Figure 172, and torque all six bolts to 22 N·m (16 ft.lb.), using a 50 Torx bit.
    Note: Notice that the center support bolts are equipped with locking tab washers that must have the tabs bent up to lock the bolts in place.

Continued on Page 106

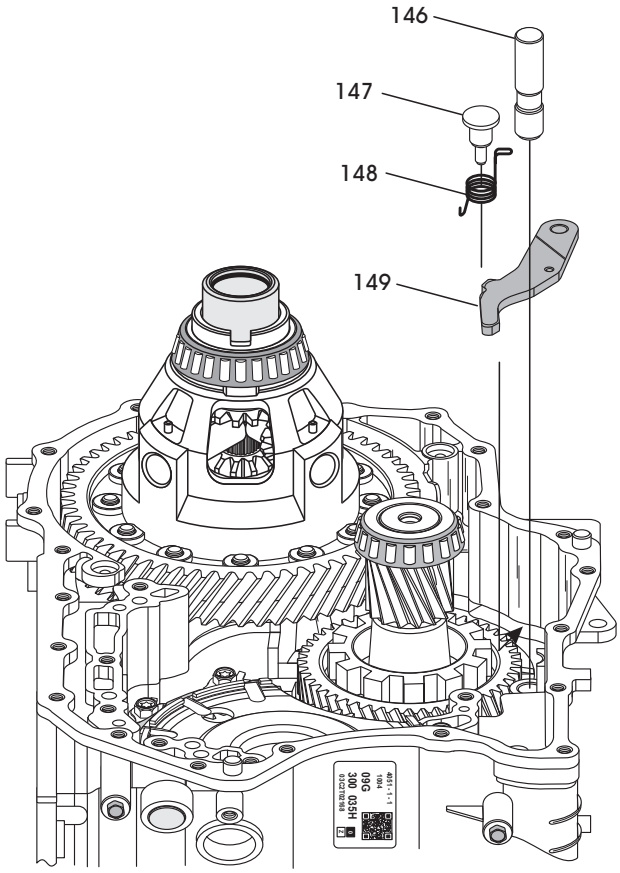

146 PARK ROD ROLLER AND PIN ASSEMBLY.
147 PARK PAWL ANTI-RATTLE SPRING PIVOT PIN.
148 PARK PAWL ANTI-RATTLE SPRING.
149 PARK PAWL.

Copyright © 2010 ATSG

Figure 174

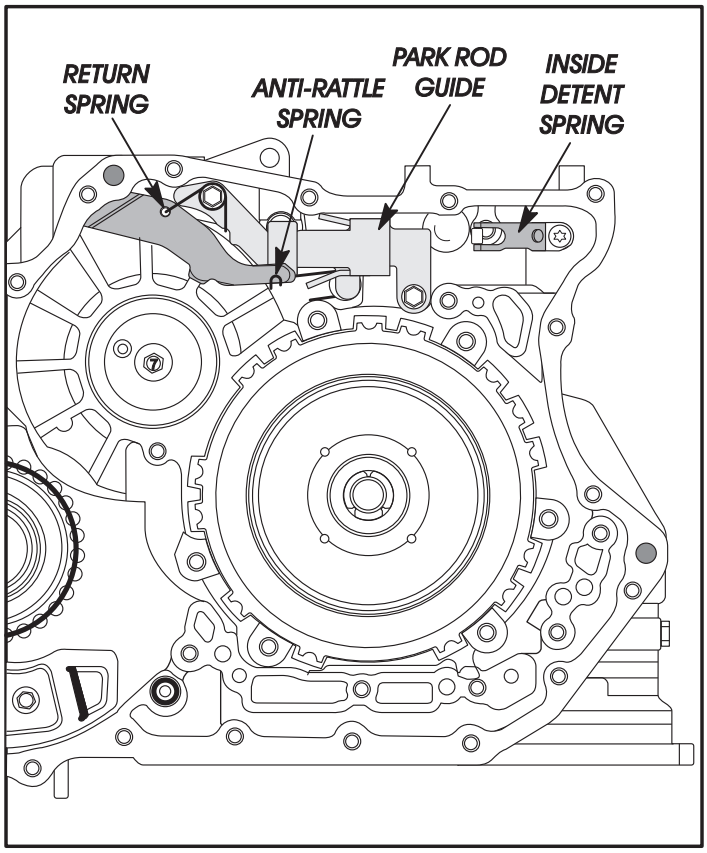

Figure 175

WWW.ALL-TRANS.BY

PARK LINKAGE EXPLODED VIEW

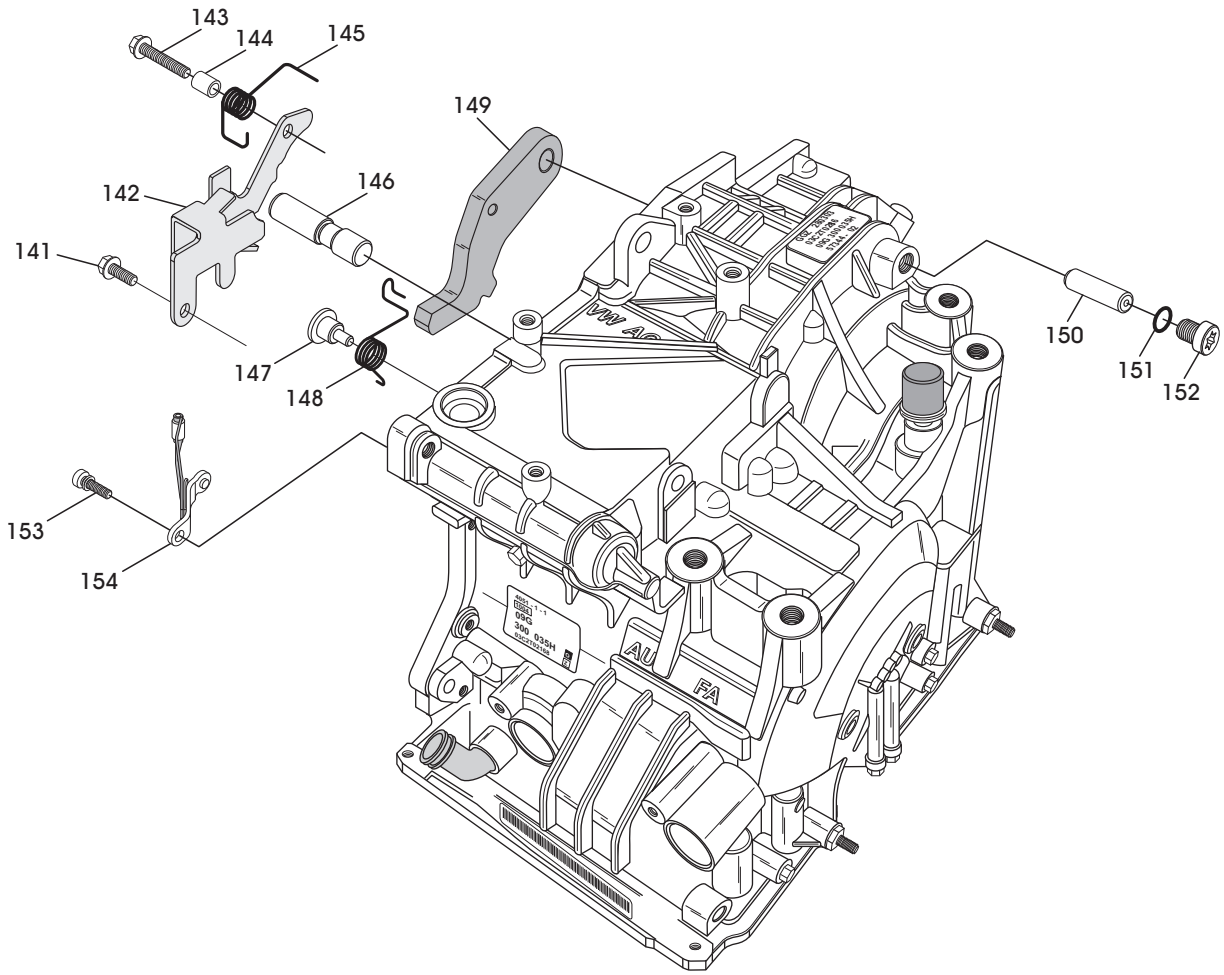

141 PARK ROD GUIDE RETAINING BOLT (14 MM LENGTH).
142 PARK ROD GUIDE.
143 PARK ROD GUIDE RETAINING BOLT (28 MM LENGTH).
144 PARK PAWL RETURN SPRING SLEEVE.
145 PARK PAWL RETURN SPRING.
146 PARK ROD ROLLER AND PIN ASSEMBLY.
147 PARK PAWL ANTI-RATTLE SPRING PIVOT PIN.
148 PARK PAWL ANTI-RATTLE SPRING.
149 PARK PAWL.
150 PARK PAWL PIVOT PIN.
151 PARK PAWL PIVOT PIN CASE PLUG "O" RING SEAL
152 PARK PAWLPIVOT PIN CASE PLUG.
153 INSIDE DETENT SPRING RETAINING BOLT.
154 INSIDE DETENT SPRING.

Copyright © 2010 ATSG

Figure 176

WWW.ALL-TRANS.BY

TRANSAXLE FINAL ASSEMBLY (CONT'D)

26. Install the B1 clutch housing with the opening towards the transfer driven gear, as shown in Figure 177, and insure lugs are engaged in slots in the center support.
27. Install the B1 clutch housing retaining snap ring with opening towards the transfer gear, as shown in Figure 177, and ensure it is fully seated in the center support.
    Note: This snap ring is identified by two small "turn-outs" at the snap ring ends, as shown in Figure 177.

Continued on Page 107

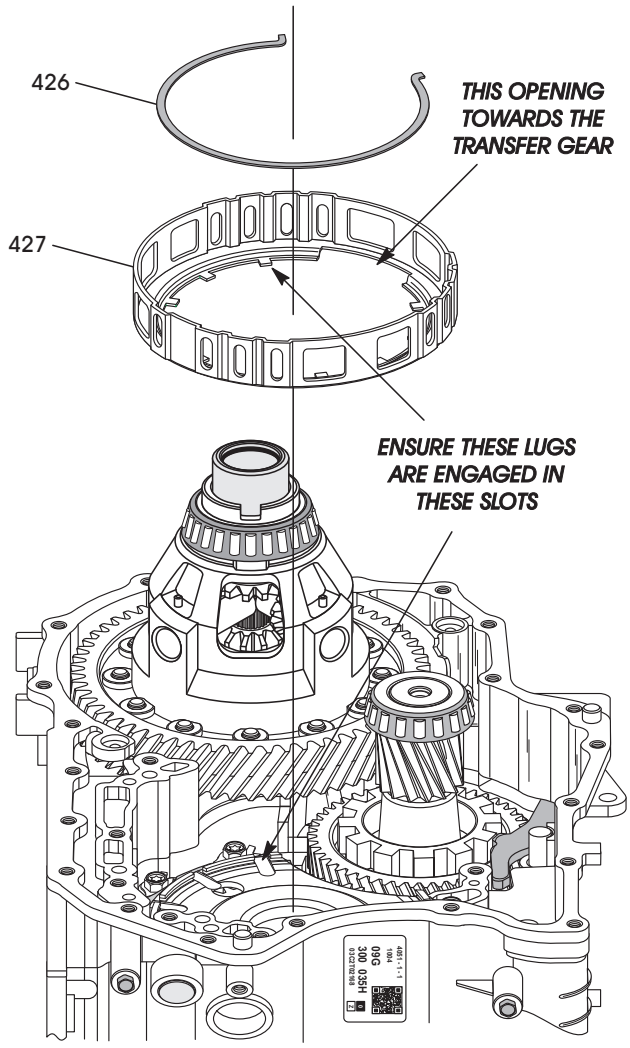

426 B1 CLUTCH HOUSING RETAINING SNAP RING.
427 B1 CLUTCH HOUSING.

Copyright © 2010 ATSG

Figure 177

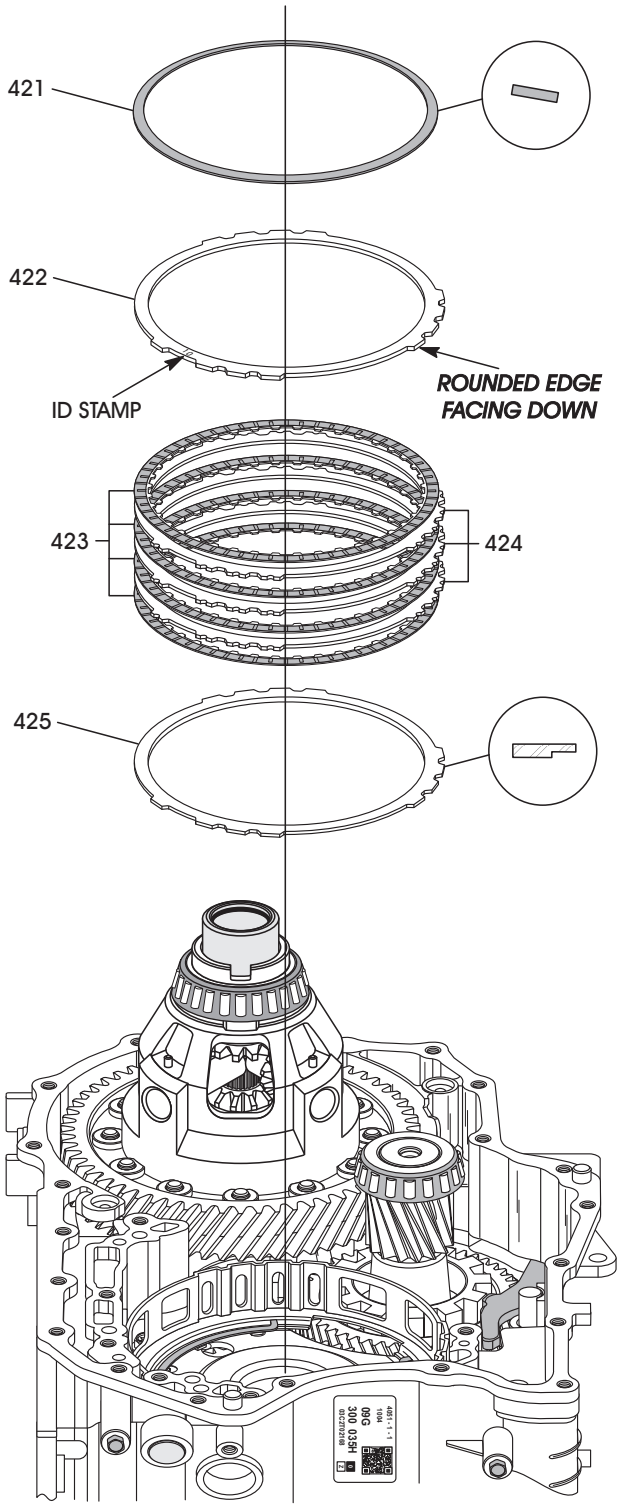

421 B1 CLUTCH "BELLVILLE" CUSHION SPRING.
422 B1 CLUTCH BACKING PLATE, STAMP 10, 2.52MM (.099") THICK.
422 B1 CLUTCH BACKING PLATE, STAMP 3, 2.4MM (.095") THICK.
423 B1 CLUTCH FRICTION PLATES (QTY MAY VARY).
424 B1 CLUTCH STEEL PLATES, 1.8MM (.071") (QTY MAY VARY).
425 B1 CLUTCH "*STEPPED*" PRESSURE PLATE, 2.9MM (.114") THICK.

Copyright © 2010 ATSG

Figure 178

WWW.ALL-TRANS.BY

TRANSAXLE FINAL ASSEMBLY (CONT'D)

28. Install the B1 clutch "stepped" pressure plate, as shown in Figure 178, with "step" facing down.
29. Install B1 clutch pack beginning with a friction plate onto the pressure plate and alternating with a steel plate, as shown in Figure 178, until you have installed the proper quantity, as the quantity may vary.
    Note: All friction plates should be soaked in proper fluid for 30 minutes before installing.
30. Install the B1 clutch backing plate on top of the last friction, as shown in Figure 178, with the rounded edge facing the friction.
    Note: Notice the number stamped on top side of backing plate, which is an indicator that it is selective, but no selectives available as yet.
31. Install the B1 clutch "bellville" cushion plate in the direction shown in Figure 178.
    Note: There is no backing plate snap ring for the B1 clutch pack. We will check B1 clutch clearance before installing oil pump, as the apply piston is in the oil pump assembly. The apply piston caged return spring assembly sits between the piston and cushion plate, retaining the B1 clutch pack.
32. Install K3 clutch housing drive hub, as shown in Figure 179, and engage on splines of sun gear.
33. Install the number 6 thrust bearing race into the drive hub, as shown in Figure 179.
34. Install the number 6 thrust bearing with needles facing down, as shown in Figure 179.
35. Install completed K1 clutch housing, as shown in Figure 179.
36. Ensure that number 5 thrust bearing race is still in place on K1 clutch housing, as shown in Figure 179.

Continued on Page 108

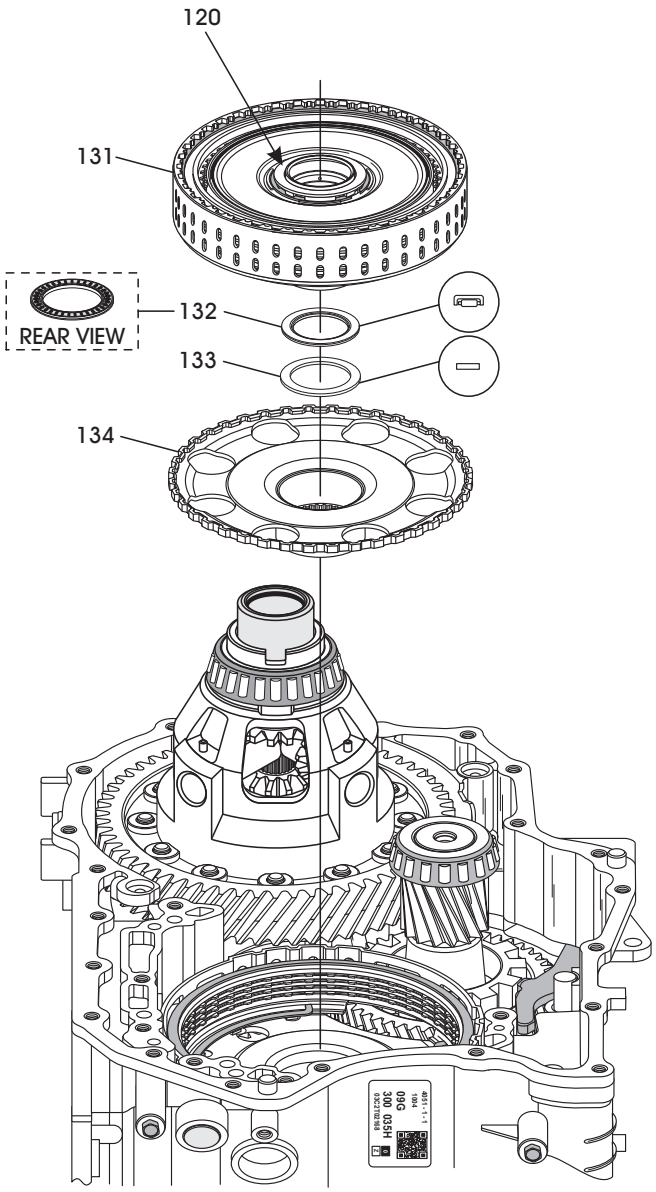

120 NUMBER 5 THRUST BEARING RACE.
131 K1 CLUTCH HOUSING ASSEMBLY.
132 NUMBER 6 THRUST BEARING.
133 NUMBER 6 THRUST BEARING RACE.
134 K3 CLUTCH HOUSING DRIVE HUB.

Copyright © 2010 ATSG

Figure 179

WWW.ALL-TRANS.BY

TRANSAXLE FINAL ASSEMBLY (CONT'D)

37. Install the completed front planetary assembly, as shown in Figure 180, ensuring that number 5 thrust bearing and number 2 thrust washer are still in place.
38. Front planetary assembly must be rotated back and forth to engage K1 clutch frictions into the planetary hub until fully seated.
39. Install K3 clutch housing assembly, as shown in Figure 181, by rotating back and forth until it is fully seated.
    Note: K3 clutch frictions must engage on the front planet hub, K3 clutch housing must be engaged into B1 frictions and drive hub.
40. Install the B1 clutch apply ring and return spring assembly, as shown in Figure 181.
    Note: Return spring assembly goes around the outside diameter of K3 clutch housing and seats on B1 clutch cushion spring.

Continued on Page 109

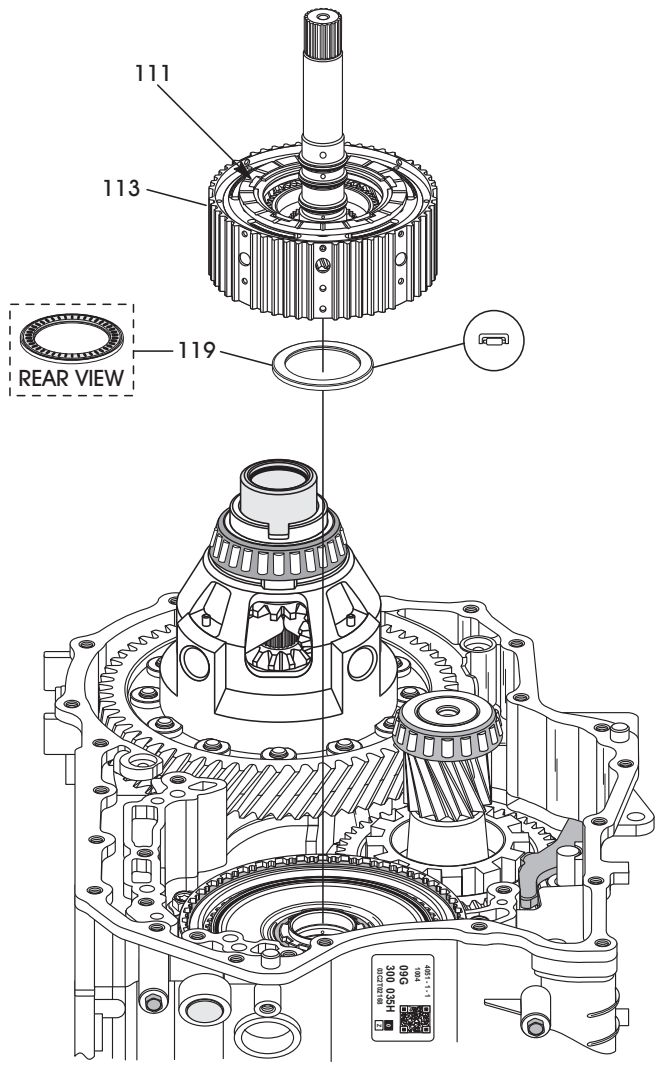

111 NUMBER 2 THRUST WASHER.
113 FRONT PLANETARY ASSEMBLY.
119 NUMBER 5 THRUST BEARING.

Copyright © 2010 ATSG

Figure 180

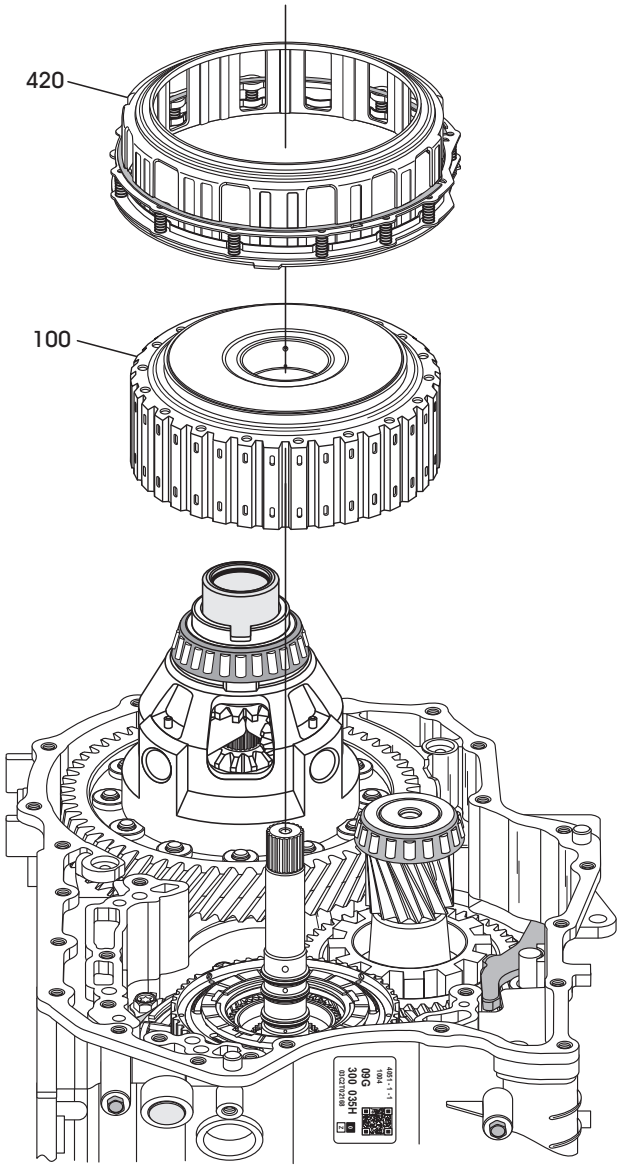

100 K3 CLUTCH HOUSING ASSEMBLY.
420 B1 CLUTCH APPLY RING AND RETURN SPRING ASSEMBLY.

Copyright © 2010 ATSG

Figure 181

WWW.ALL-TRANS.BY

TRANSAXLE FINAL ASSEMBLY (CONT'D)

41. Measure the distance from case pump surface to the washer surface on the K3 clutch housing, as shown in Figure 182, using a straight edge and ruler, or a depth micrometer.
    Note: This measurement should match the measurement taken on disassembly to ensure that K3 clutch housing is fully seated.
42. Install "H" gage on transaxle pump surface, as shown in Figure 183, lower the adjustment rod to the piston surface (See Inset in Figure 183) of the B1 apply ring/return spring assembly and tighten the adjustment rod locking knob.
43. Now turn the "H" gage over and set it on the completed oil pump assembly, ***"with"*** the new design gasket, as shown in Figure 184.
44. Measure with feeler gauge between adjustment rod and B1 clutch piston to determine the B1 clutch clearance.
45. B1 clutch clearance should be approximately 0.26 mm (.010") per friction plate installed.

Continued on Page 110

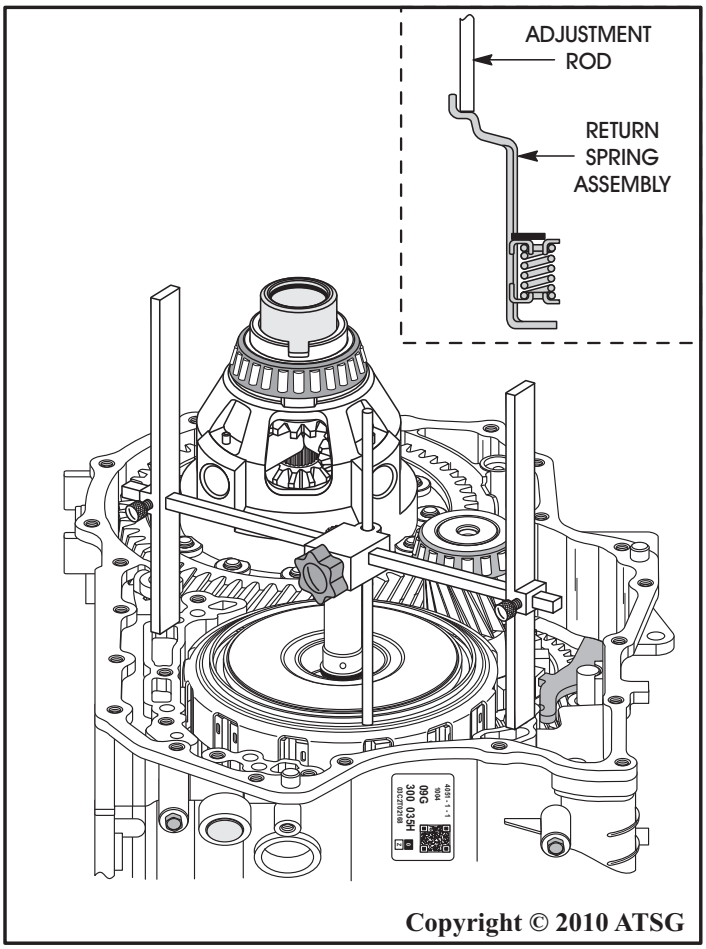

Figure 183

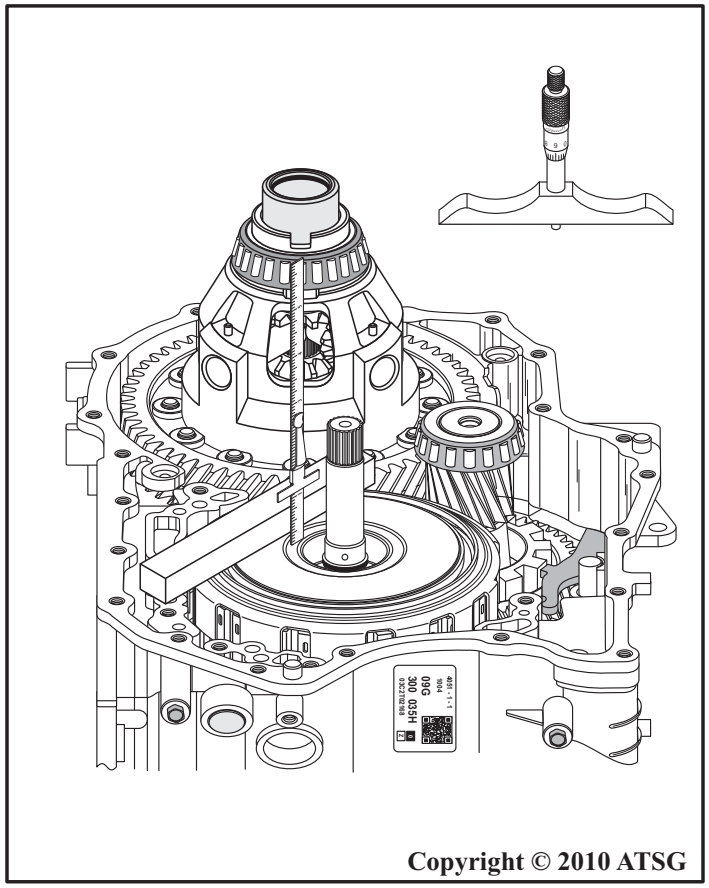

Figure 182

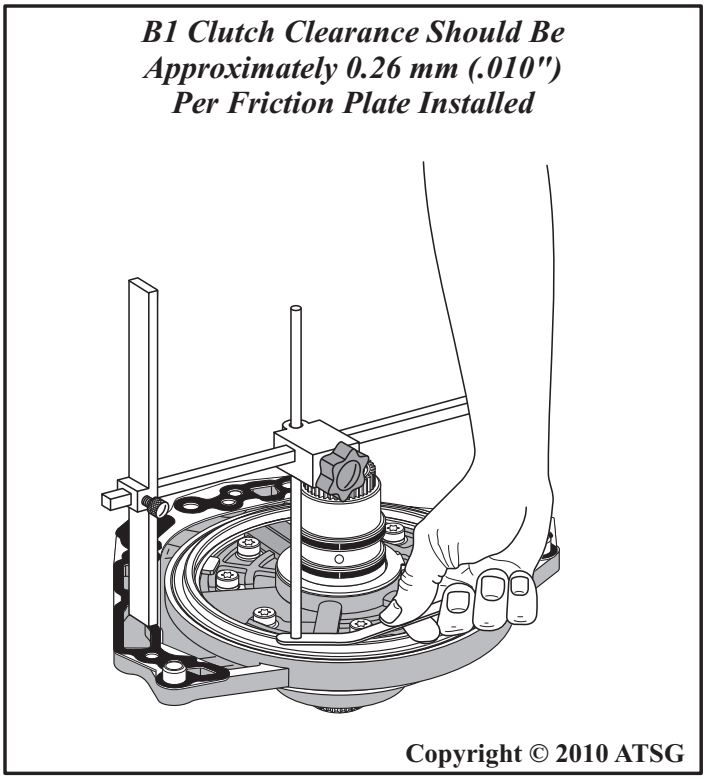

Figure 184

WWW.ALL-TRANS.BY

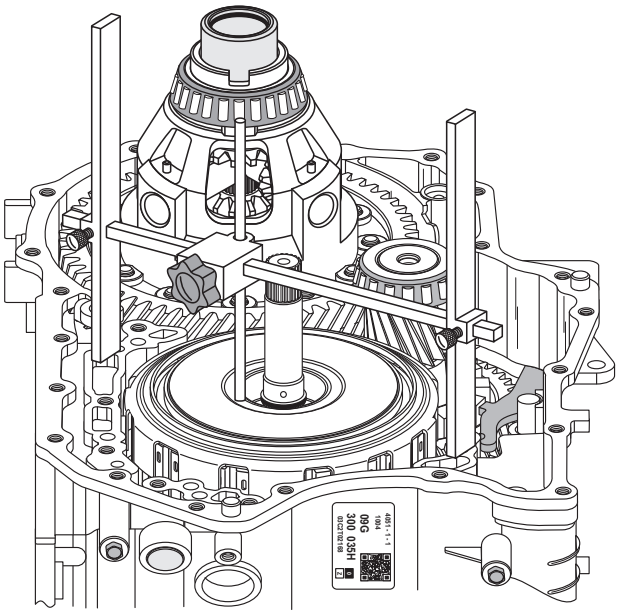

Copyright © 2010 ATSG

Figure 185

TRANSAXLE FINAL ASSEMBLY (CONT'D)

46. Install "H" gage on transaxle pump surface, as shown in Figure 185, lower the adjustment rod to the surface of the number 1 thrust washer on the K3 clutch housing and tighten adjustment rod locking knob.
47. Now turn the "H" gage over and set it on the completed oil pump assembly, ***"with"*** the new design gasket and number 1 thrust washer in place, as shown in Figure 186.
48. Measure with feeler gauge between adjustment rod and the number 1 thrust washer, as shown in Figure 186, to determine transaxle end-play.
49. Transaxle end-play should be approximately 0.52 MM (.020").
    Note: Currently there are no selective thrust washers available.
50. Install new manual shaft seal using the proper seal driver (See Figure 187).

Continued on Page 111

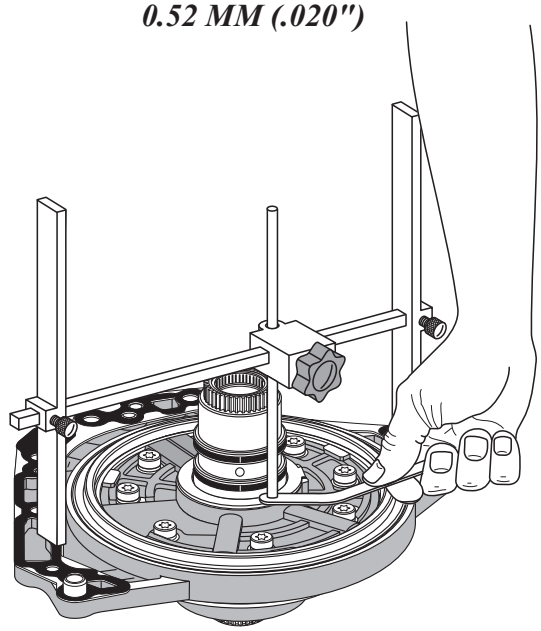

Copyright © 2010 ATSG

Figure 186

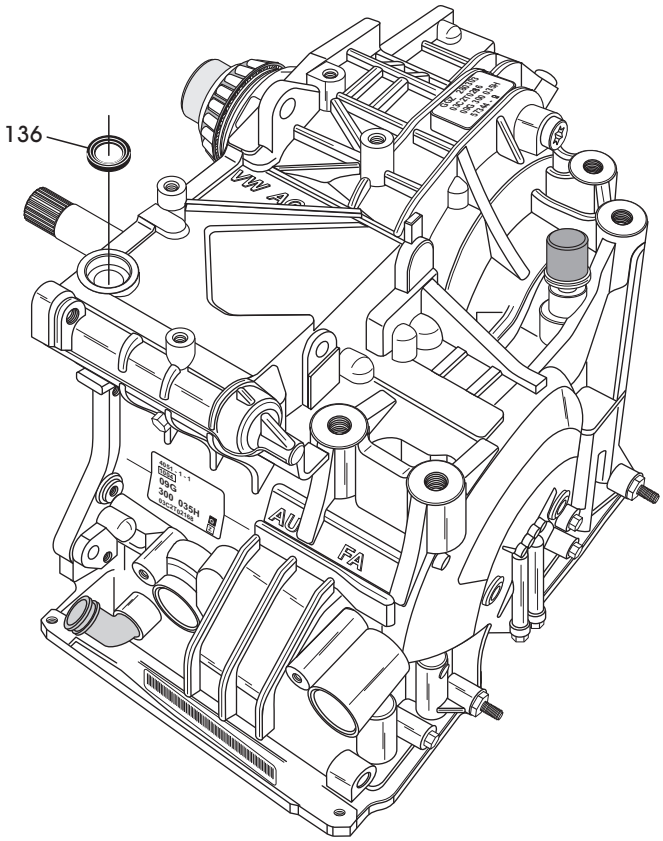

136 MANUAL SHAFT SEAL.

Copyright © 2010 ATSG

Figure 187

WWW.ALL-TRANS.BY

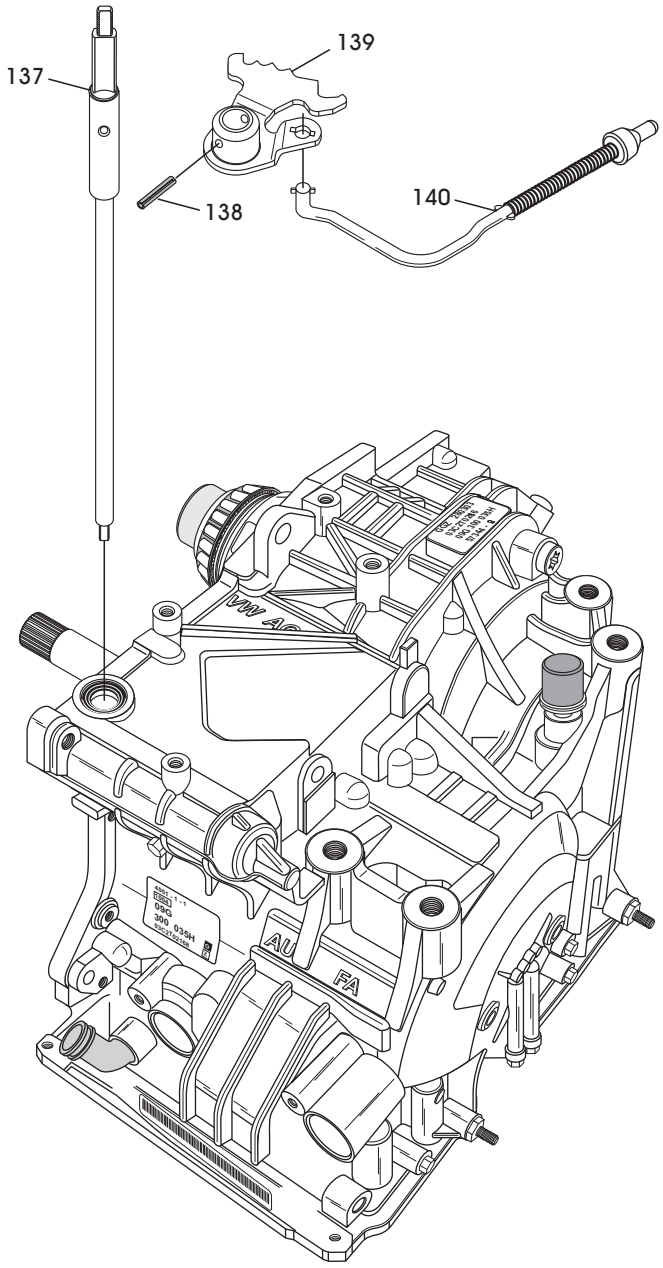

137 MANUAL SHAFT.
138 ROLLED PIN.
139 INSIDE DETENT LEVER.
140 PARKING ROD.

Copyright © 2010 ATSG

Figure 188

TRANSAXLE FINAL ASSEMBLY (CONT'D)

51. Assemble the park rod to the inside detent lever, as shown in Figure 188.
52. Install the inside detent lever and park rod into transaxle with park rod going through the park rod guide.
53. Install the manual shaft through the case bore, through the inside detent lever, as shown in Figure 188.
54. Align the holes in the inside detent lever and the manual shaft and install the rolled pin using a hammer and punch, as shown in Figure 189.

Continued on Page 112

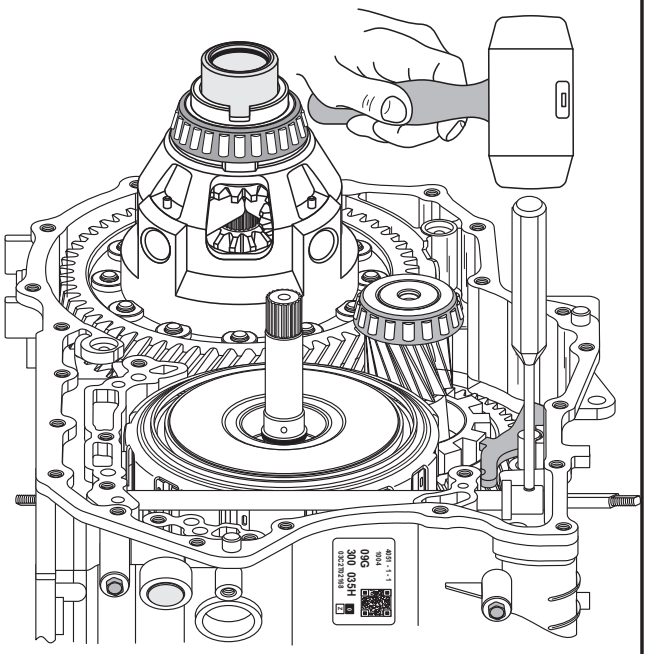

Copyright © 2010 ATSG

Figure 189

WWW.ALL-TRANS.BY

TRANSAXLE FINAL ASSEMBLY (CONT'D)

55. Install new design pump to case gasket over the dowels on oil pump, as shown in Figure 191, and retain with a small amount of Trans-Jel®.
56. Install two new case to converter cover seals in the case pockets, as shown in Figure 190, and retain with small amount of Trans-Jel®.
57. Install the oil pump and gasket assembly, as shown in Figure 190.
    Note: Rotate the input shaft to engage oil pump into front sun gear splines.
58. Install the 6 oil pump retaining bolts, as shown in Figure 190.
    Note: Pay close attention to the length of bolts as positioning is critical.
59. Torque all 6 oil pump bolts to 19 N·m (14 ft.lb.), as shown in Figure 192.

Continued on Page 113

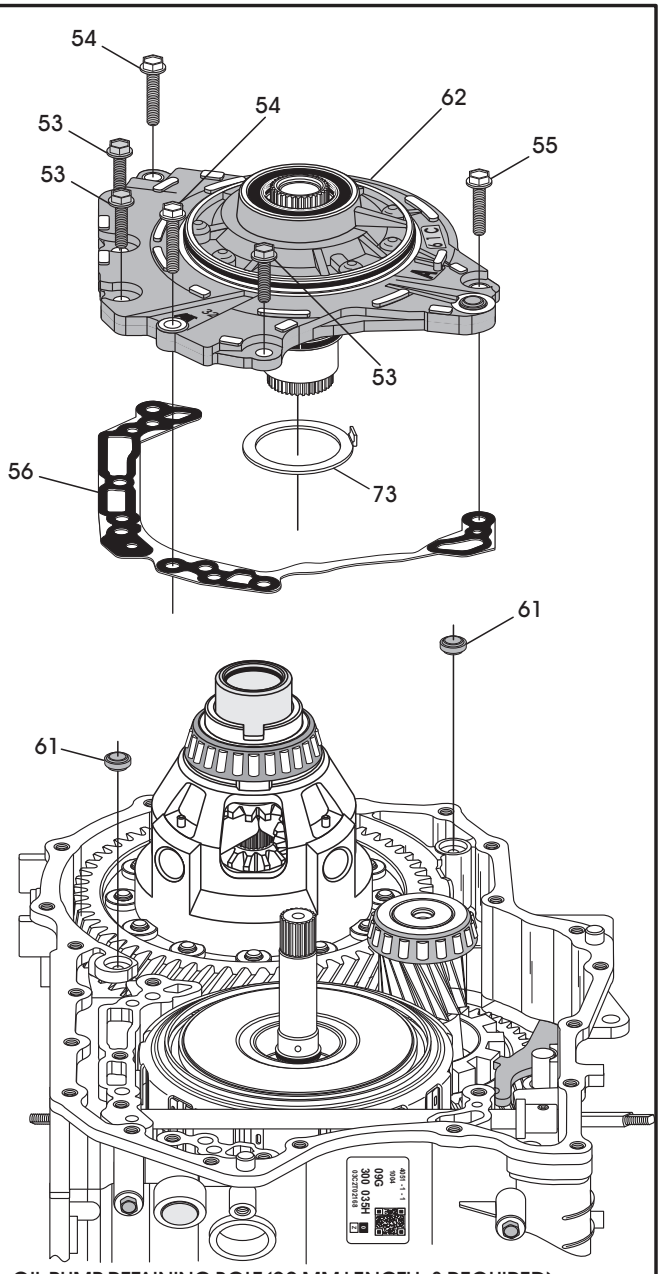

53 OIL PUMP RETAINING BOLT (22 MM LENGTH, 3 REQUIRED).
54 OIL PUMP RETAINING BOLT (30 MM LENGTH, 2 REQUIRED).
55 OIL PUMP RETAINING BOLT (25 MM LENGTH, 1 REQUIRED).
56 OIL PUMP TO CASE GASKETS (LATE DESIGN).
61 CONVERTER COVER TO CASE SEALS (2 REQUIRED).
62 OIL PUMP ASSEMBLY.
73 OIL PUMP TO K3 CLUTCH HOUSING THRUST WASHER (NO. 1).

Copyright © 2010 ATSG

Figure 190

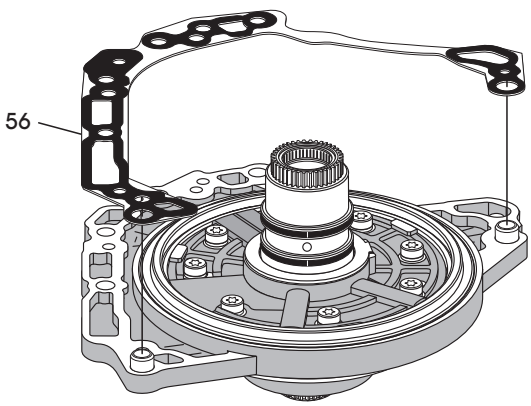

56 OIL PUMP TO CASE GASKET (LATE DESIGN).

Copyright © 2010 ATSG

Figure 191

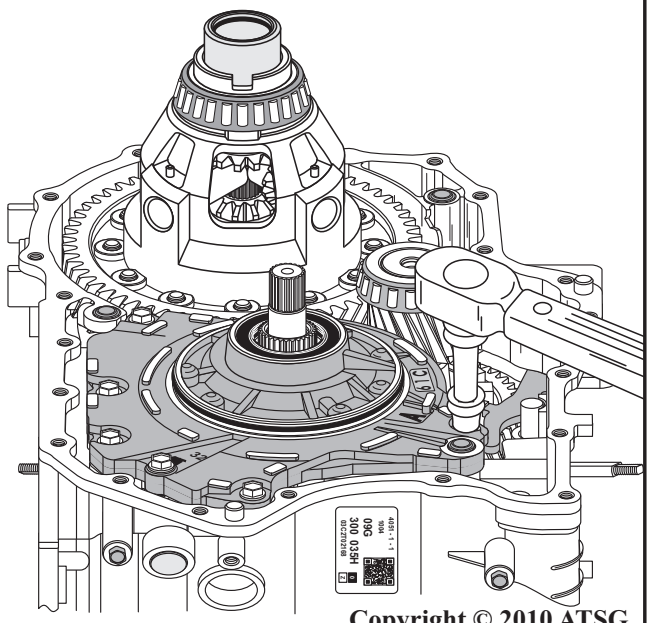

Copyright © 2010 ATSG

Figure 192

WWW.ALL-TRANS.BY

TRANSAXLE FINAL ASSEMBLY (CONT'D)

60. Lube oil pump "O" ring and seal surface of the converter cover with Trans-Jel®.
61. Apply 1/8 inch bead of RTV sealant to converter cover, as shown in Figure 193.
62. Ensure oil pump to converter cover seal is still in place, as shown in Figure 195.
63. Install the converter cover assembly, as shown in Figure 195, using the chart in Figure 194 for the bolt locations.
64. Torque all converter housing retaining bolts to 19 N·m (14 ft.lb.).

Continued on Page 114

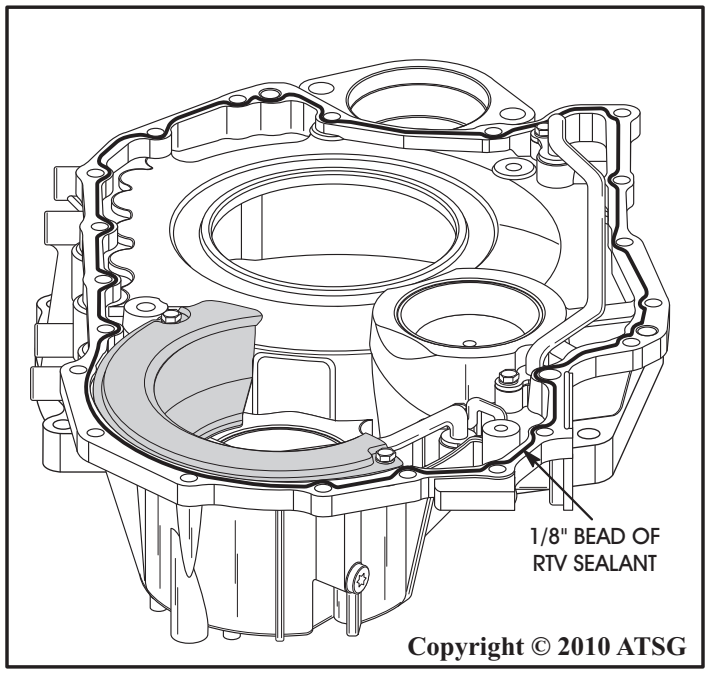

Figure 193

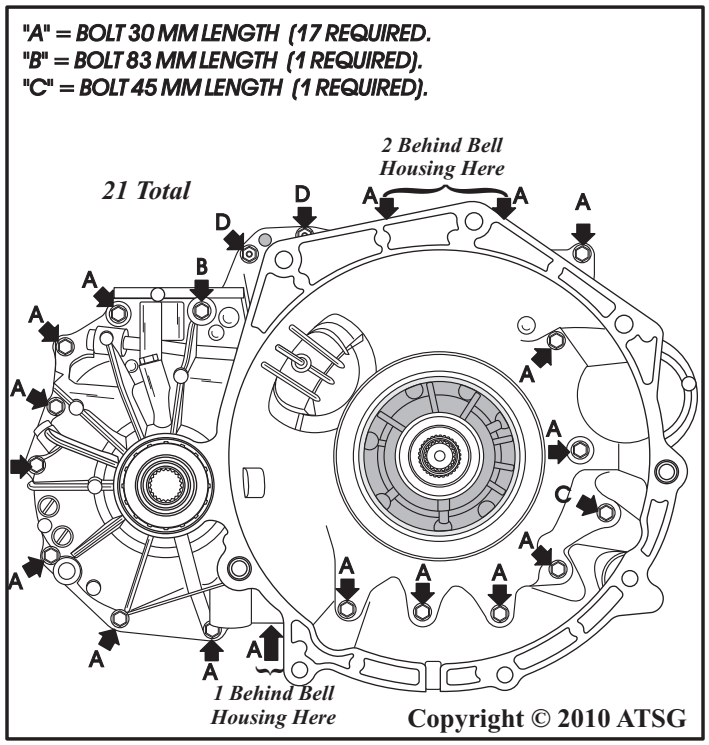

Figure 194

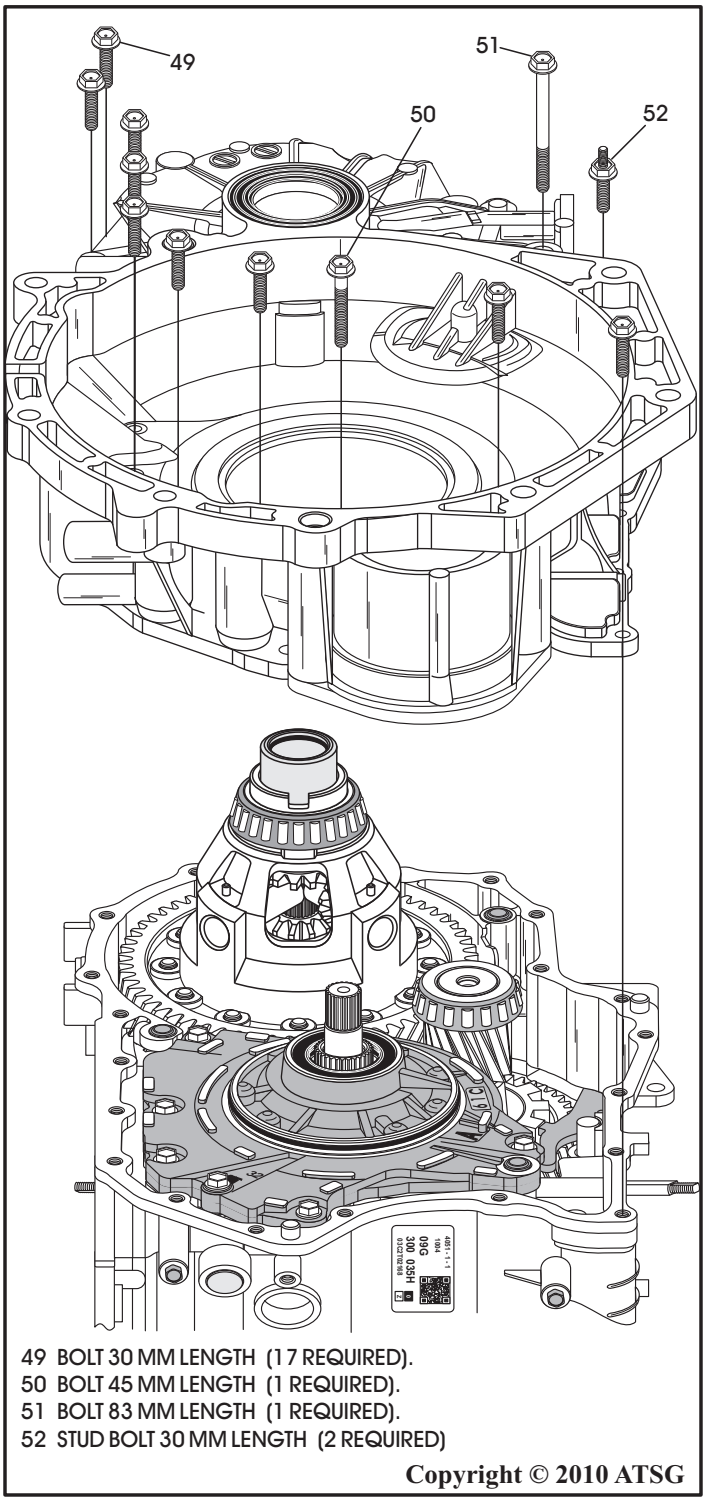

Figure 195

WWW.ALL-TRANS.BY

TRANSAXLE FINAL ASSEMBLY (CONT'D)

65. Install new "O" ring seal onto the 8-way case connector, as shown in Figure 196, lube with a small amount of Trans-Jel®.
66. Install new "O" ring seal onto the 14-way case connector, as shown in Figure 196, lube with a small amount of Trans-Jel®.
67. Install new "O" ring seal onto the temp sensor, as shown in Figure 196, lube with small amount of Trans-Jel®.
68. Install both case connectors into transaxle case bores, as shown in Figure 196, and torque the retaining bolts to 10 N·m (88 in.lb.)
69. Position the case as shown in Figure 197 and lay wiring harness' over pan rail as shown.

Continued on Page 115

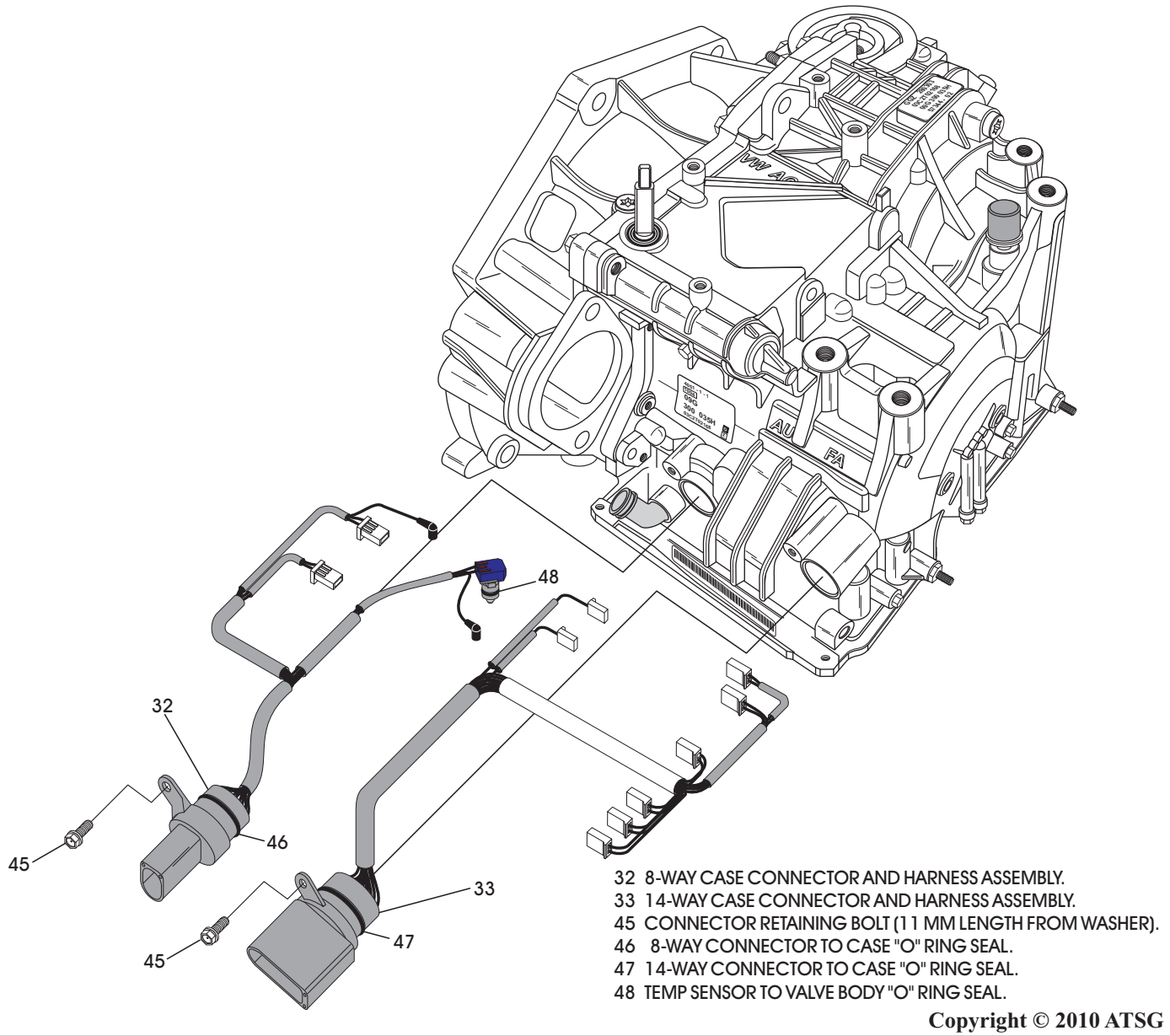

Copyright © 2010 ATSG

Figure 196

WWW.ALL-TRANS.BY

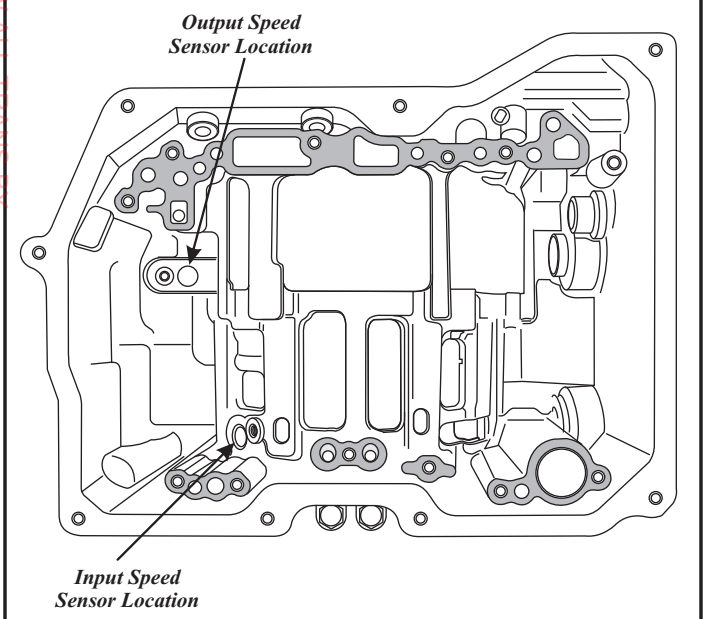

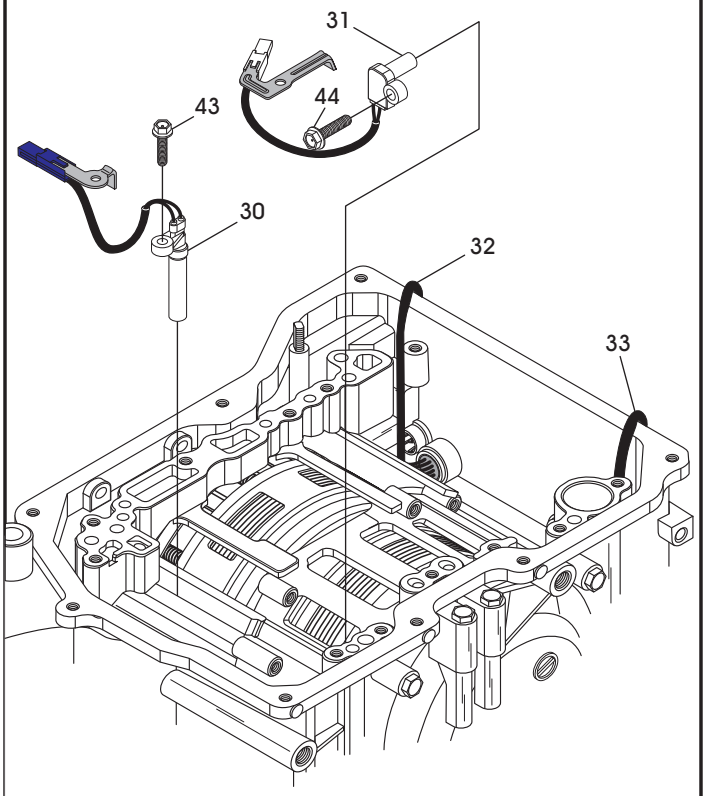

30 OUTPUT SPEED SENSOR AND HARNESS ASSEMBLY.
31 INPUT SPEED SENSOR AND HARNESS ASSEMBLY.
32 SENSOR AND SWITCH HARNESS OVER PAN RAIL.
33 14 WAY SOLENOID HARNESS OVER PAN RAIL.
43 OUTPUT SPEED SENSOR RETAINING BOLT (18 MM LENGTH).
44 INPUT SPEED SENSOR RETAINING BOLT (22 MM LENGTH).

Copyright © 2010 ATSG

Figure 197

TRANSAXLE FINAL ASSEMBLY (CONT'D)

70. Install the output speed sensor, as shown in Figure 197, and torque bolt to 7 N·m (62 in.lb.).
    Note: This bolt has 8 mm head, 18 mm long.
71. Install the input speed sensor, as shown in Figure 197, and torque bolt to 10 N·m (88 in.lb.).
    Note: This bolt has 10 mm head, 21 mm long.
72. Install the B1 accumulator springs and piston into the case as shown in Figure 198.
    Note: The number of B1 accumulator springs will vary depending on year and model.

Continued on Page 116

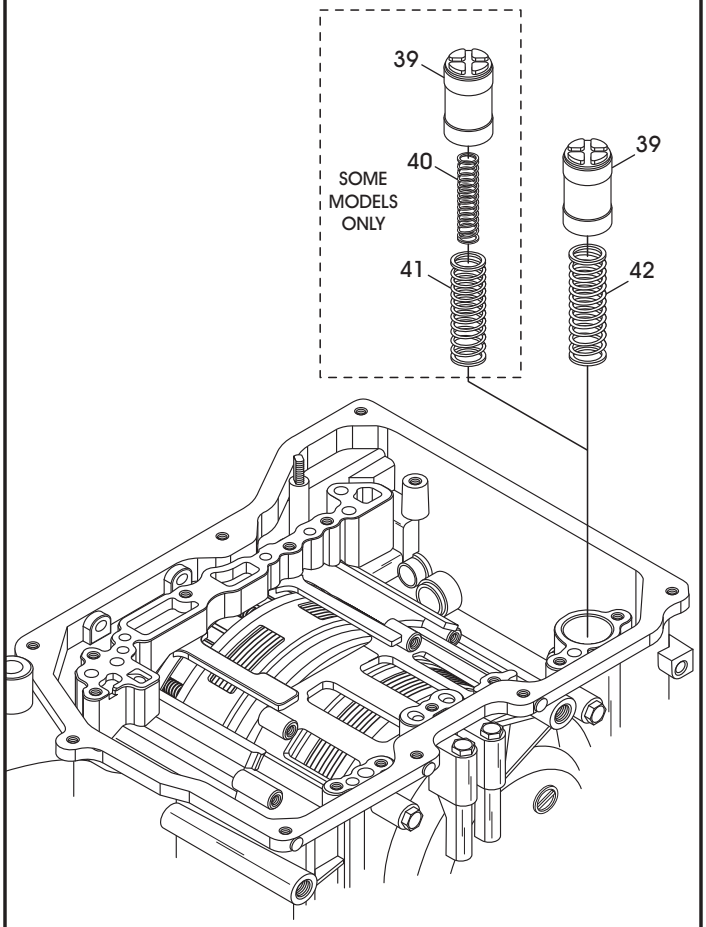

39 B1 ACCUMULATOR PISTON.
40 B1 ACCUMULATOR PISTON INNER SPRING (SOME MODELS).
41 B1 ACCUMULATOR PISTON OUTER SPRING.
42 B1 ACCUMULATOR PISTON SPRING.

Copyright © 2010 ATSG

Figure 198

WWW.ALL-TRANS.BY

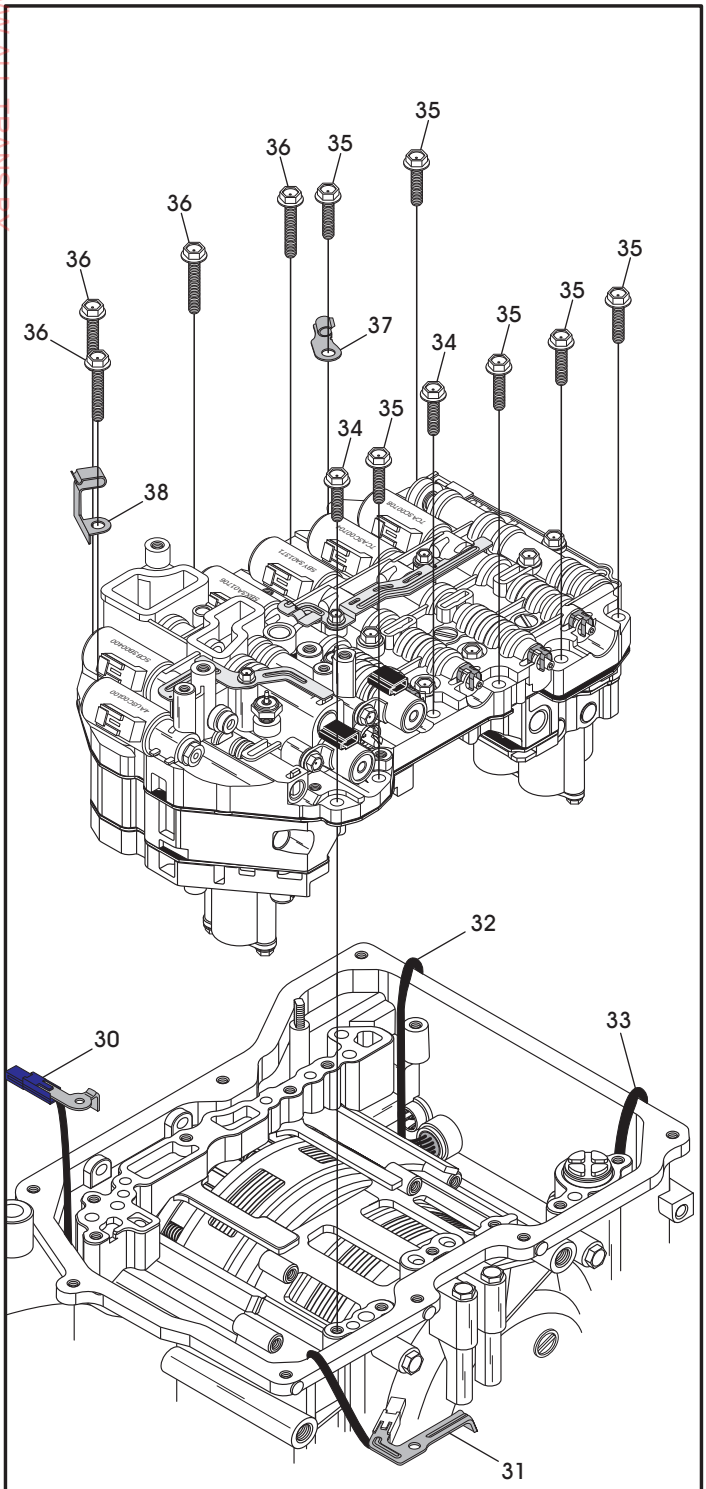

30 OUTPUT SPEED SENSOR HARNESS OVER PAN RAIL.
31 INPUT SPEED SENSOR HARNESS OVER PAN RAIL.
32 SENSOR AND SWITCH HARNESS OVER PAN RAIL.
33 14 WAY SOLENOID HARNESS OVER PAN RAIL.
34 VALVE BODY TO CASE BOLT (16 MM LENGTH).
35 VALVE BODY TO CASE BOLT (21 MM LENGTH).
36 VALVE BODY TO CASE BOLT (28 MM LENGTH).
37 WIRE HARNESS RETAINING BRACKET.
38 WIRE HARNESS RETAINING BRACKET.

Copyright © 2010 ATSG

Figure 199

TRANSAXLE FINAL ASSEMBLY (CONT'D)

73. With all wire harness' laid over pan rail, install the completed valve body assembly onto case, as shown in Figure 199.
74. Install the 12 valve body to case bolts and wire the wire harness retaining brackets, as shown in Figure 199.
    Note: Wire harness retaining brackets will vary from model to model.
75. Torque all valve body to case retaining bolts to 9 N·m (80 in.lb.) (See Figure 200).

Continued on Page 116

VALVE BODY TO CASE BOLTS

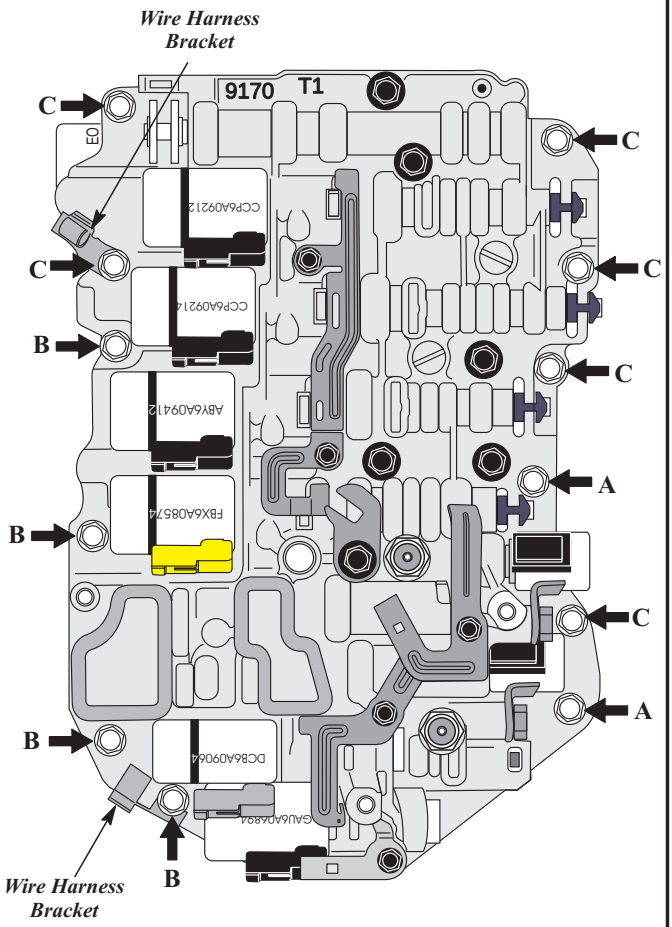

A = 16 mm Length
B = 28 mm Length
C = 21 mm Length

Copyright © 2010 ATSG

Figure 200

WWW.ALL-TRANS.BY

TRANSAXLE FINAL ASSEMBLY (CONT'D)

76. Install the temp sensor into the valve body bore, install retaining bracket and torque the retaining bolt to 11 N·m (97 in.lb.) (See Figure 199).
77. Install the output speed sensor "blue" connector to valve body, as shown in Figure 201, torque the retaining bolt to 7 N·m (62 in.lb.).
78. Install the input speed sensor "white" connector to valve body, as shown in Figure 201, torque the retaining bolt to 7 N·m (62 in.lb.).
79. Connect all 8 solenoid connectors to the proper solenoids, as shown in Figure 202, using the list of the wire colors to each of the solenoids that you prepared during the disassembly process.
    Note: Ensure that the harness' are in retaining brackets and no wires are pinched.
80. Connect wire connectors to both speed sensors, as shown in Figure 202.
81. Connect both hydraulic switches (if used), as shown in Figure 202.
82. Install the internal manual shift lever to manual shaft as shown in Figure 202, and ensure lever engages into manual valve properly.
83. Install the internal manual shift lever retaining nut, as shown in Figure 202.
    Note: There are two different designs of the manual lever nut, as shown in Figure 202.

Continued on Page 118

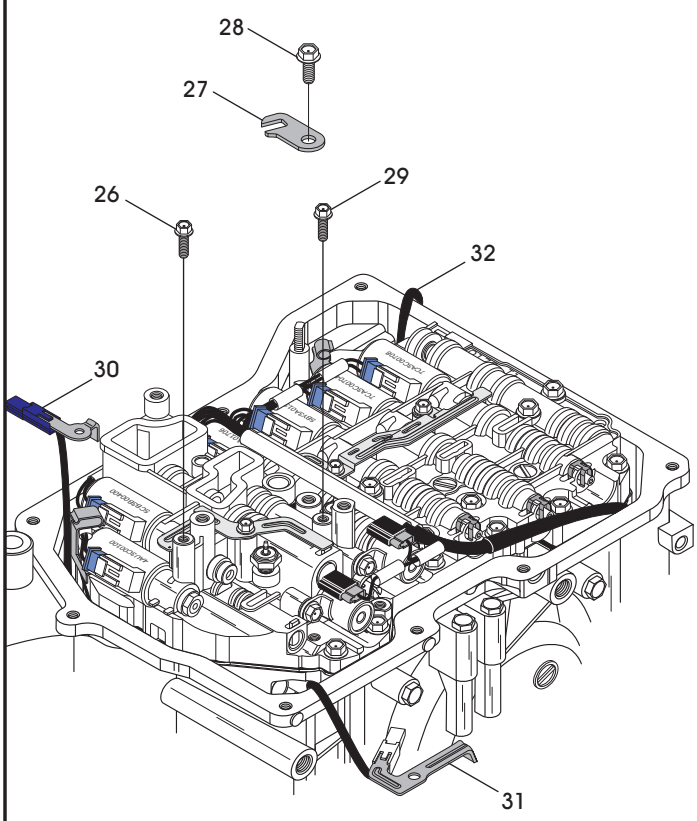

26 OUTPUT SPEED SENSOR BRACKET BOLT (11 MM LENGTH).
27 TFT SENSOR RETAINING BRACKET.
28 TFT SENSOR RETAINING BRACKET BOLT (11 MM LENGTH).
29 INPUT SPEED SENSOR BRACKET BOLT (11 MM LENGTH).
30 OUTPUT SPEED SENSOR HARNESS OVER PAN RAIL.
31 INPUT SPEED SENSOR HARNESS OVER PAN RAIL.
32 SENSOR AND SWITCH HARNESS OVER PAN RAIL.

Copyright © 2010 ATSG

Figure 201

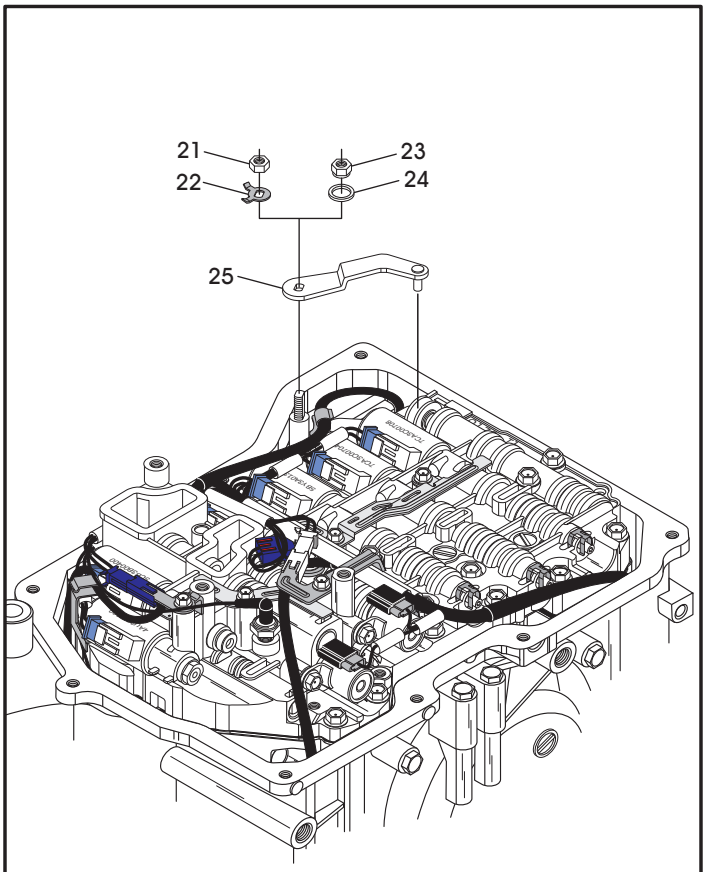

21 MANUAL SHAFT LEVER RETAINING NUT (SOME MODELS).
22 RETAINING NUT LOCKING TAB WASHER (SOME MODELS).
23 MANUAL SHAFT LEVER NUT WITH SHOULDER (SOME MODELS).
24 MANUAL SHAFT LEVER CENTERING WASHER (SOME MODELS).
25 INTERNAL MANUAL SHAFT LEVER.

Copyright © 2010 ATSG

Figure 202

WWW.ALL-TRANS.BY

TRANSAXLE FINAL ASSEMBLY (CONT'D)

84. Some models use a locking tab washer and some models use a self locking nut with a centering washer below the nut. The models with the self locking nut have a shoulder on the nut that faces down toward the "centering" washer, as shown in Figure 204.
85. Using a pair of vice-grips to hold inside manual lever, as shown in Figure 203, torque the manual lever nut to 7 N·m (62 in.lb.).
86. Install new oil filter, as shown in Figure 205 and torque the three bolts to 11 N·m (97 in.lb.).

Continued on Page 119

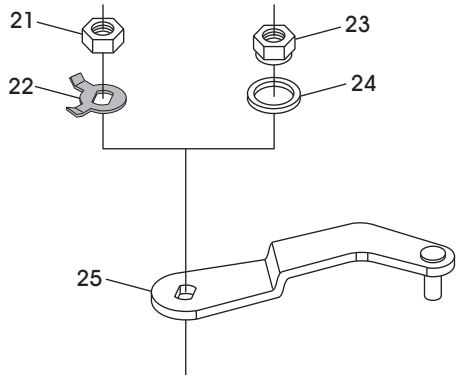

21 MANUAL SHAFT LEVER RETAINING NUT (SOME MODELS).
22 RETAINING NUT LOCKING TAB WASHER (SOME MODELS).
23 MANUAL SHAFT LEVER NUT WITH SHOULDER (SOME MODELS).
24 MANUAL SHAFT LEVER CENTERING WASHER (SOME MODELS).
25 INTERNAL MANUAL SHAFT LEVER.

Copyright © 2010 ATSG

Figure 204

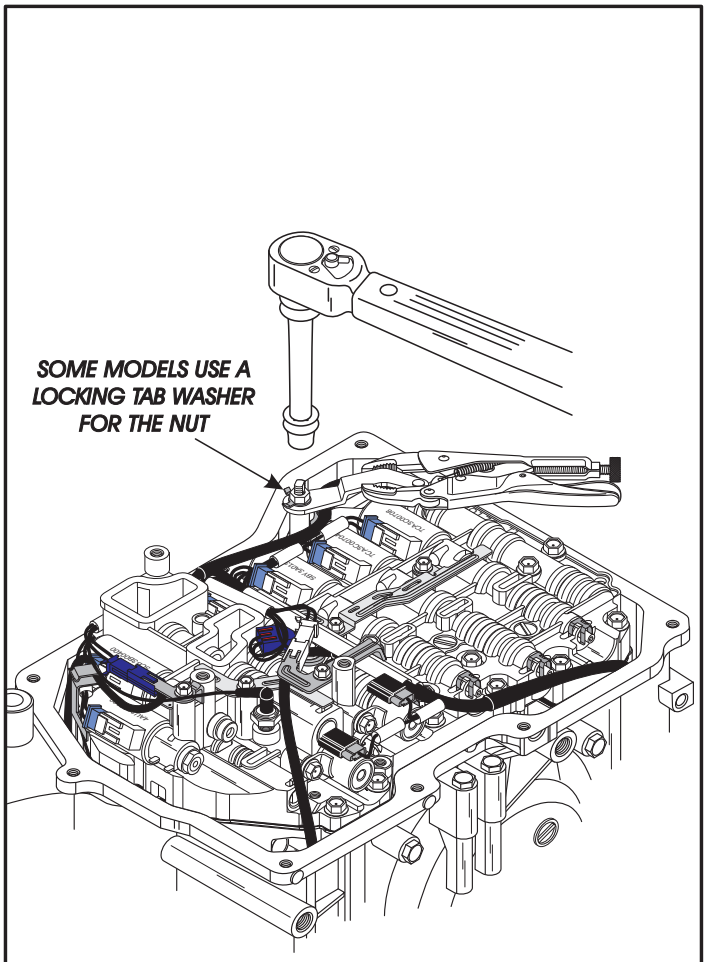

Copyright © 2010 ATSG

Figure 203

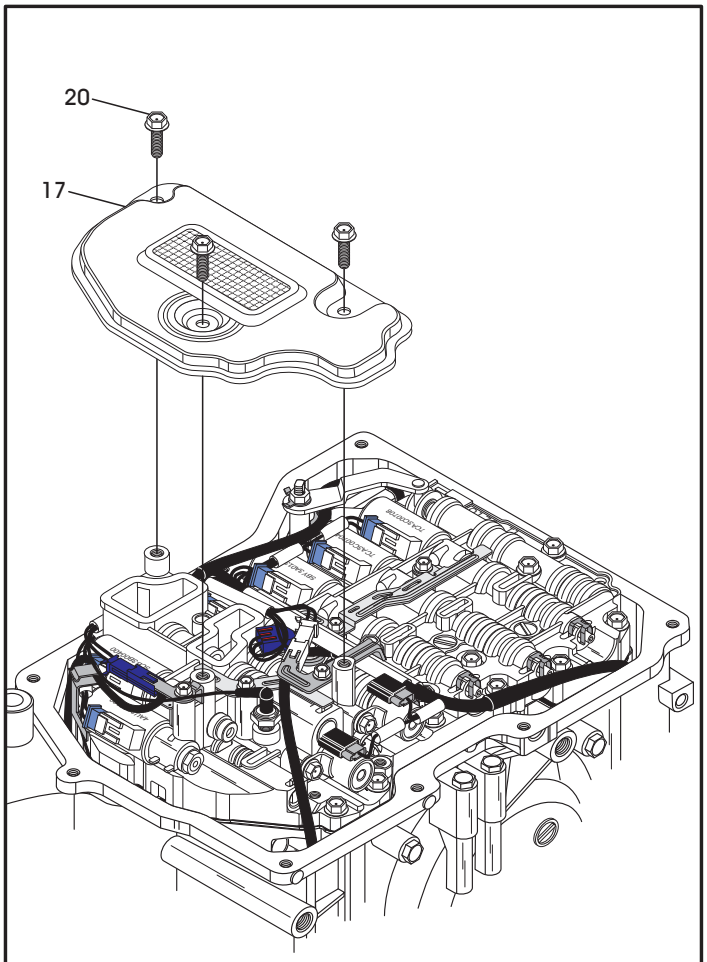

17 OIL FILTER (MODEL DEPENDANT).
20 OIL FILTER RETAINING BOLTS (3 REQUIRED).

Copyright © 2010 ATSG

Figure 205

WWW.ALL-TRANS.BY

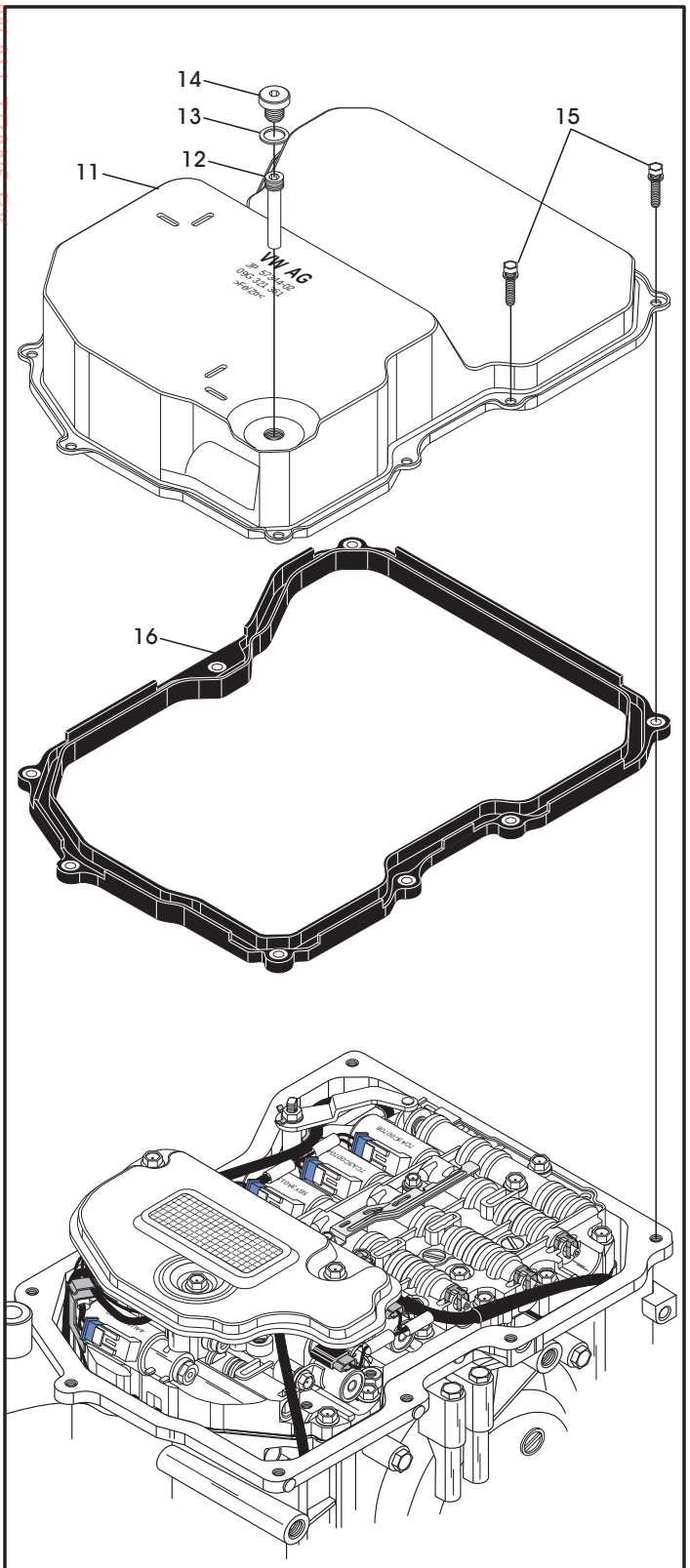

11 BOTTOM OIL PAN (MODEL DEPENDANT).
12 OIL PAN "STAND-PIPE" (MODEL DEPENDANT).
13 OIL LEVEL CHECK PLUG SEALING WASHER.
14 OIL LEVEL CHECK PLUG.
15 OIL PAN BOLTS (8 REQUIRED ON "09G").
16 OIL PAN GASKET.

Copyright © 2010 ATSG

Figure 206

TRANSAXLE FINAL ASSEMBLY (CONT'D)

87. Install new oil pan gasket to oil pan, as shown in Figure 206.
    Note: Pan gaskets have spacers incorporated in the gasket to prevent over-torque, and must be in place for all pan bolts.

CAUTION: Now is the time to recheck all of the electrical connections, all harness' in their proper retainers, no pinched wires, filter in place, etc.....

88. Install oil pan and gasket on transaxle, as shown in Figure 206 and install oil pan bolts.
    Note: Refer to Pages 38 and 39 for the various stand -pipes and oil pans on the various models.
89. Torque the oil pan bolts to 7 N·m (62 in.lb.), as shown in Figure 207.
90. Torque oil pan drain plug to 27 N·m (20 ft.lb.).

Continued on Page 120

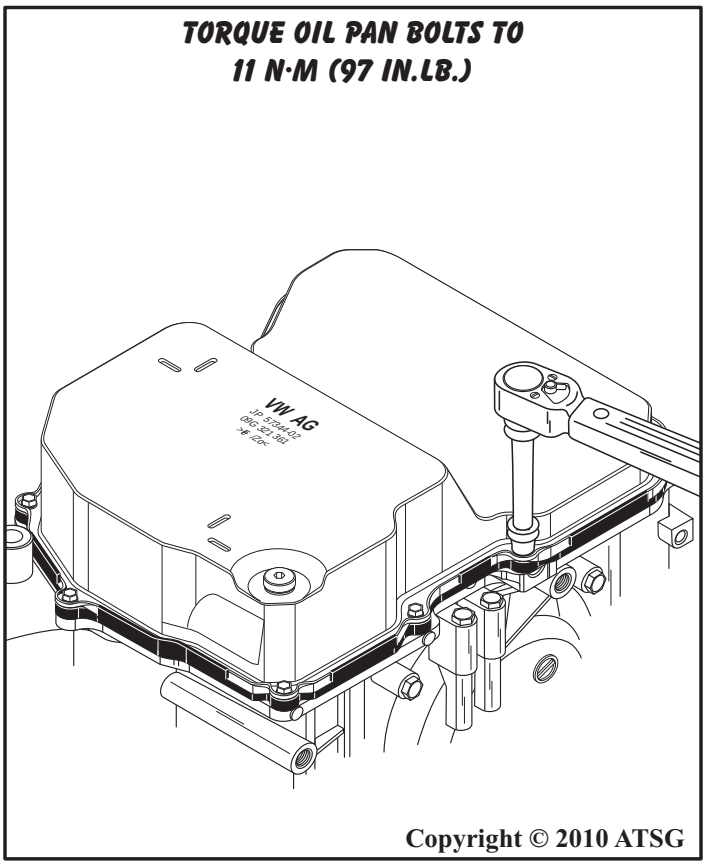

Copyright © 2010 ATSG

Figure 207

WWW.ALL-TRANS.BY

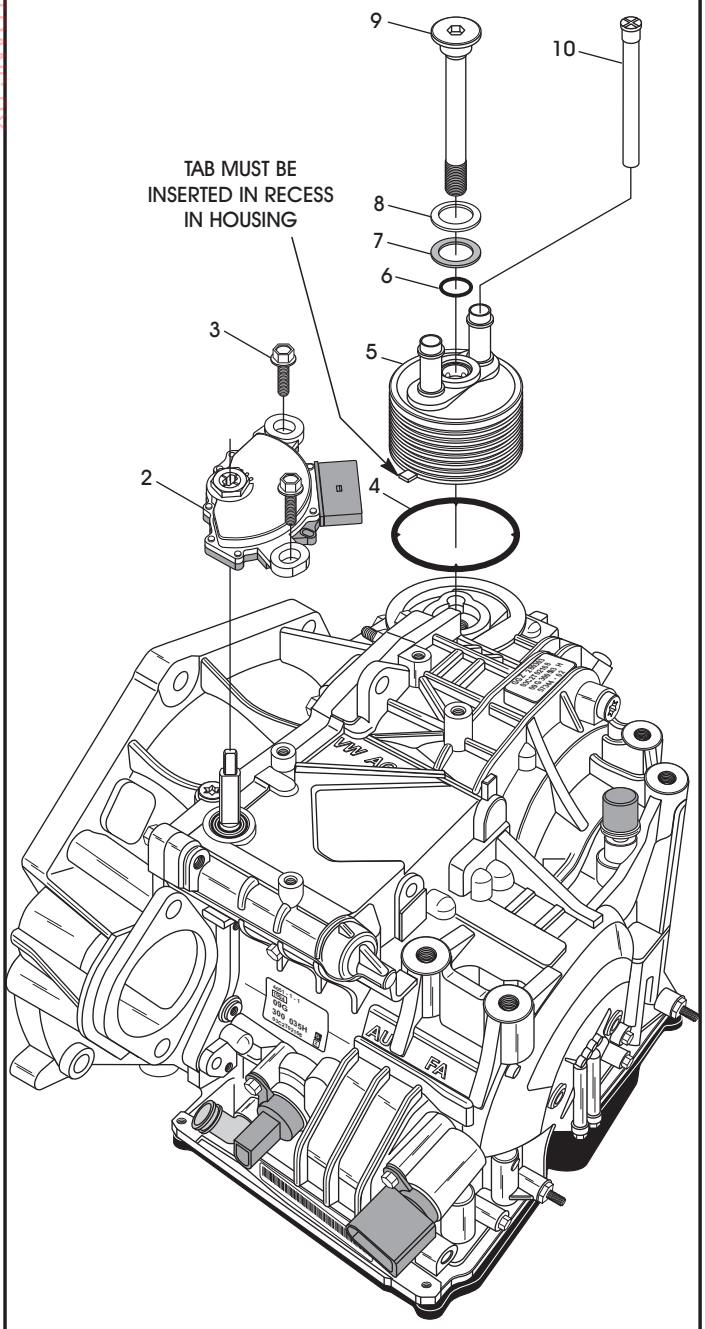

2 TRANSAXLE RANGE SWITCH.
3 TRANSAXLE RANGE SWITCH RETAINING BOLTS (2 REQUIRED).
4 INTEGRAL COOLER TO CASE *SPECIAL* "O" RING SEAL.
5 INTEGRAL COOLER ASSEMBLY.
6 "O" RING SEAL.
7 FLAT WASHER.
8 CONE SHAPED LOCKING WASHER.
9 INTEGRAL COOLER RETAINING BOLT.
10 INTEGRAL COOLER FLOW CONTROL PIPE (SOME MODELS).

Copyright © 2010 ATSG

Figure 208

TRANSAXLE FINAL ASSEMBLY (CONT'D)

91. Install the transaxle range switch, as shown in Figure 208, torque bolts to 11 N·m (97 in.lb.).
92. Install new special "O" ring seal on bottom of integral cooler, as shown in Figure 209, retain with small amount of Trans-Jel®.
    Note: This "O" ring seal has centering tabs cast into the inside diameter (See Figure 209).
93. Install the integral cooler assembly on converter housing, as shown in Figure 208.
    Note: Cooler has a tab that must be inserted in recess of converter cover. All models are not equipped with this recess (See Figure 208).
94. Install flat washer on integral cooler retaining bolt first, then install cone shaped washer on the retaining bolt, as shown in Figure 208.
95. Install new "O" ring seal and install the integral cooler retaining bolt, as shown in Figure 208.
96. Torque the integral cooler retaining bolt to 35 N·m (26 ft.lb.), using 10 mm allen socket..
97. Install the integral cooler flow control pipe into cooler inlet pipe, if used, as shown in Figure 208.
    Note: For flow control, a distributor pipe is installed into the supply side of the integral cooler on some models only. Do not install flow control pipe in the return side of the integral cooler.

Continued on Page 121

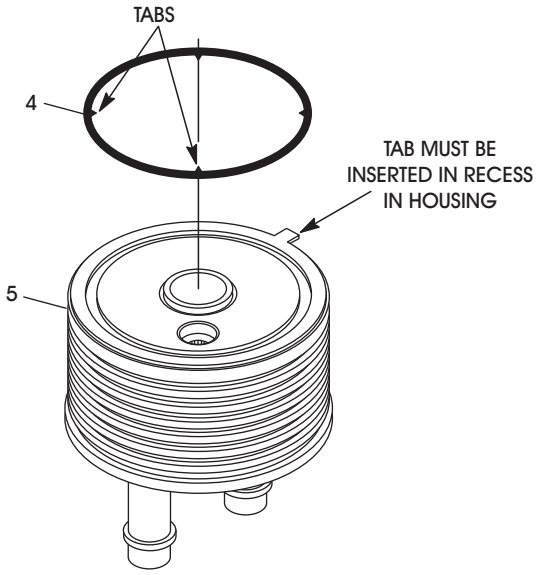

4 INTEGRAL COOLER TO CASE *SPECIAL* "O" RING SEAL.
5 INTEGRAL COOLER ASSEMBLY.

Copyright © 2010 ATSG

Figure 209

WWW.ALL-TRANS.BY

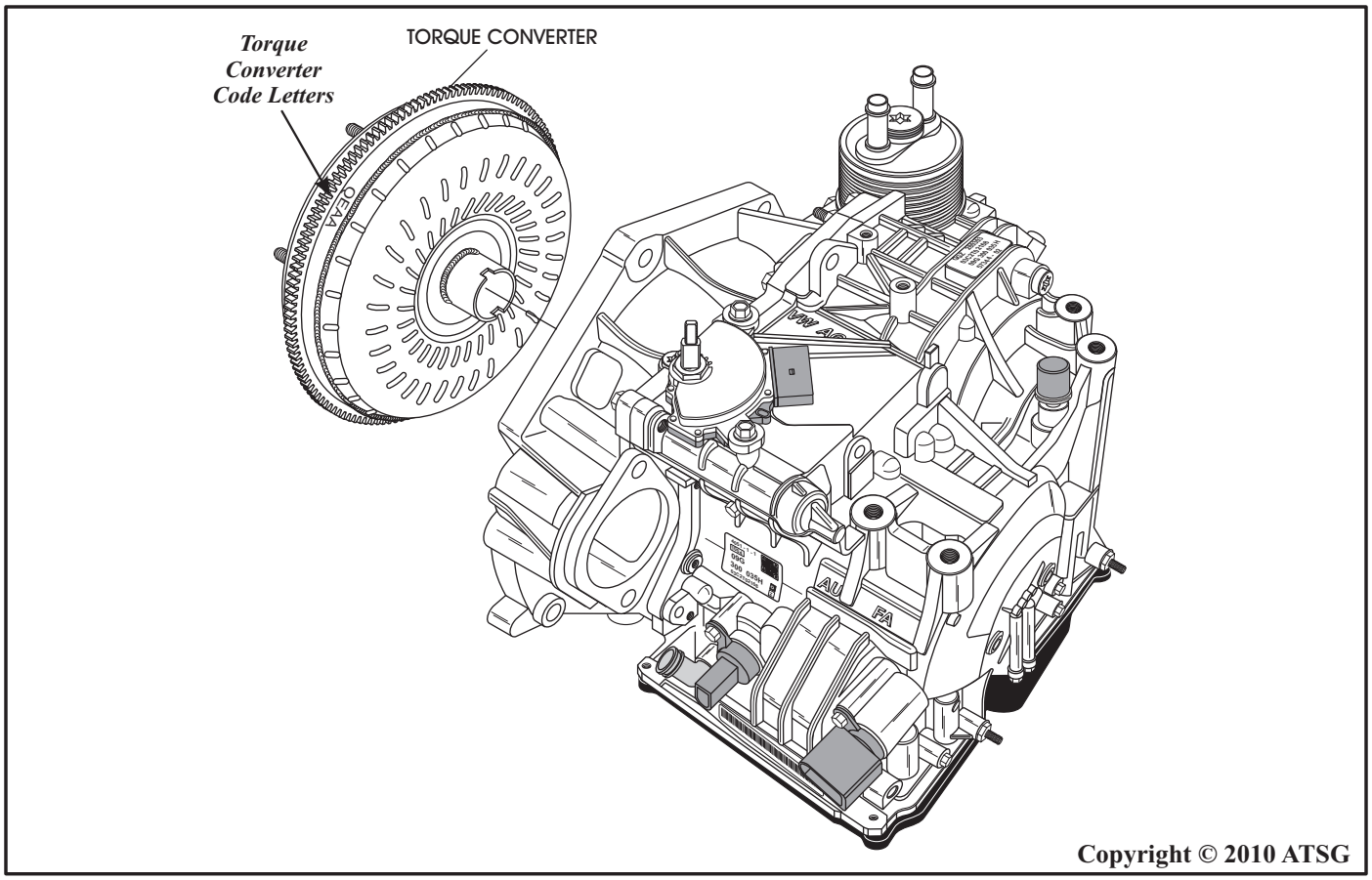

Figure 210

TRANSAXLE FINAL ASSEMBLY (CONT'D)

98. Lubricate the outside diameter of the converter hub with small amount of Trans-Jel®, and install torque converter, as shown in Figure 210.
99. Measure distance "A" from the torque converter pad to the face of converter housing, as shown in Figure 211.
100. If converter is properly installed, distance "A" will be approximately 20.5mm (0.800").

CONGRATULATIONS
YOU ARE FINISHED!

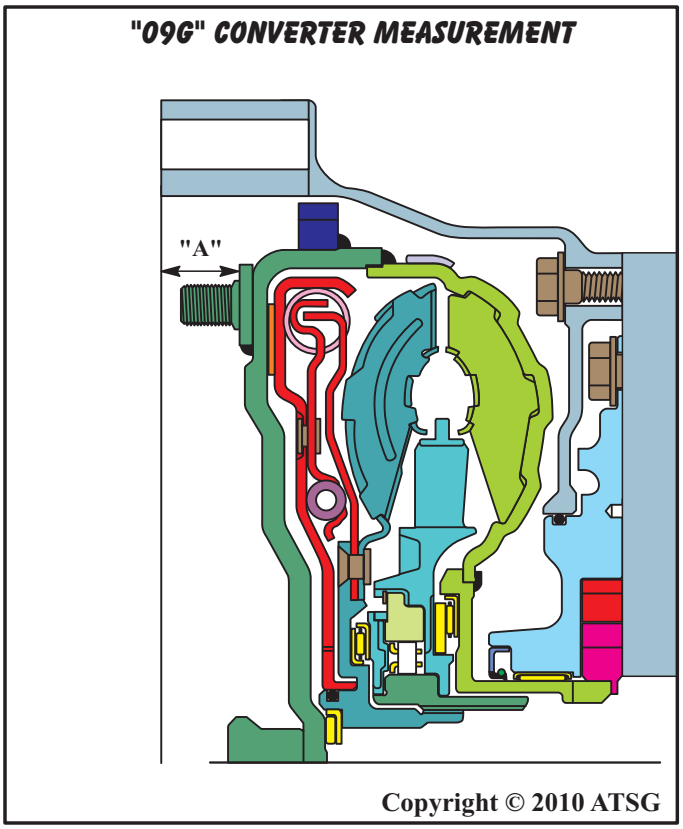

Figure 211

WWW.ALL-TRANS.BY

BEARING AND WASHER LOCATIONS

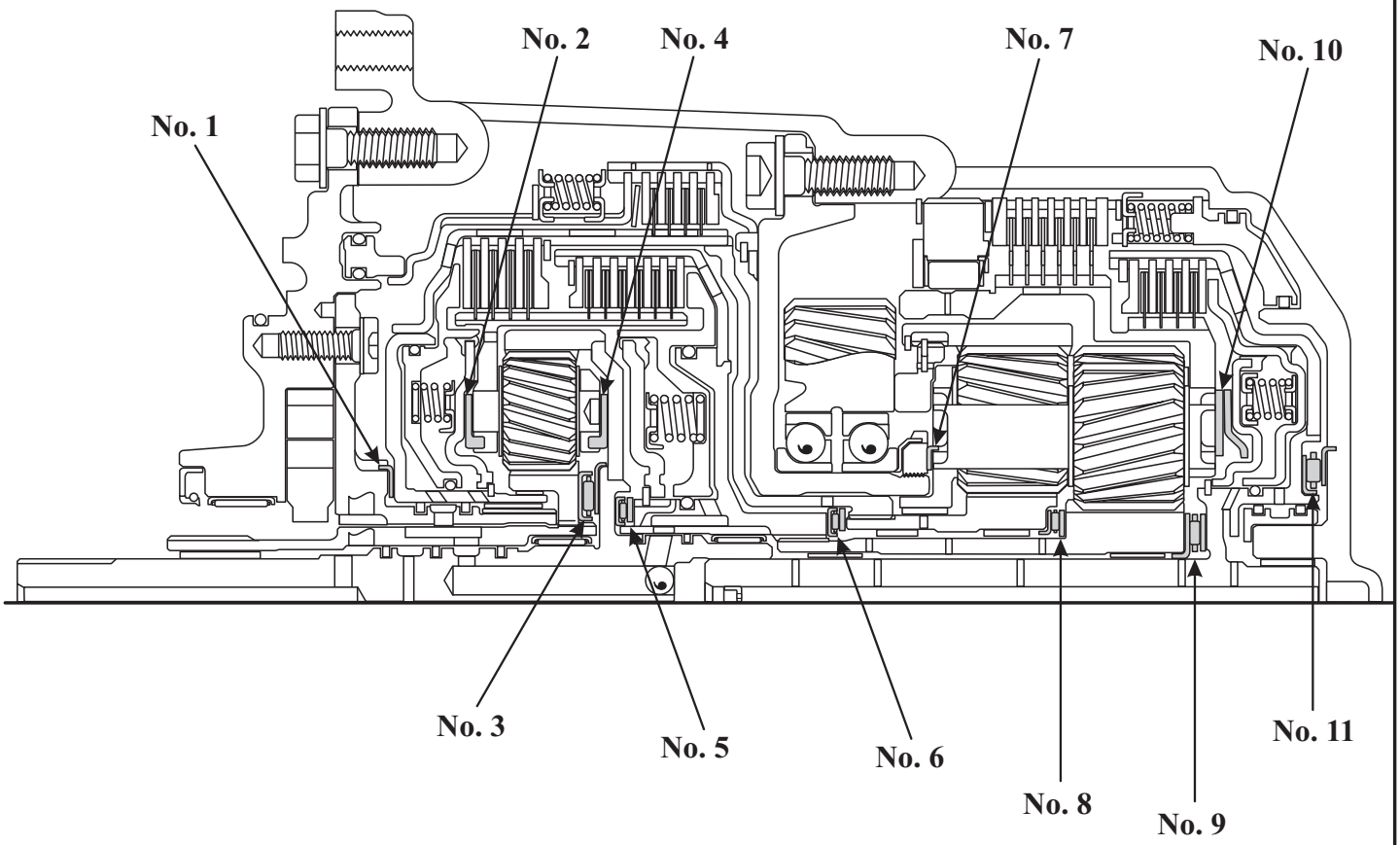

NUMBER 1 THRUST WASHER: OIL PUMP TO K3 CLUTCH HOUSING. (PLASTIC)
NUMBER 2 THRUST WASHER: K3 CLUTCH HOUSING TO FRONT PLANETARY CARRIER.
NUMBER 3 THRUST BEARING: FRONT PLANETARY SUN GEAR TO FRONT PLANETARY RING GEAR.
NUMBER 4 THRUST WASHER: FRONT PLANETARY CARRIER TO FRONT PLANETARY RING GEAR. (PLASTIC)
NUMBER 5 THRUST BEARING: FRONT PLANETARY RING GEAR TO K1 CLUTCH HOUSING.
NUMBER 6 THRUST BEARING: K1 CLUTCH HOUSING TO CENTER SUN GEAR AND SHAFT.
NUMBER 7 THRUST WASHER: CENTER SUPPORT TO REAR PLANETARY CARRIER. (BRONZE)
NUMBER 8 THRUST BEARING: CENTER SUN GEAR TO REAR SUN GEAR.
NUMBER 9 THRUST BEARING: REAR SUN GEAR TO K2 CLUTCH HOUSING.
NUMBER 10 THRUST WASHER: REAR PLANETARY CARRIER TO K2 CLUTCH HOUSING. (PLASTIC)
NUMBER 11 THRUST BEARING: K2 CLUTCH HOUSING TO CASE.

Copyright © 2010 ATSG

Figure 212

WWW.ALL-TRANS.BY

BEARING AND WASHER IDENTIFICATION

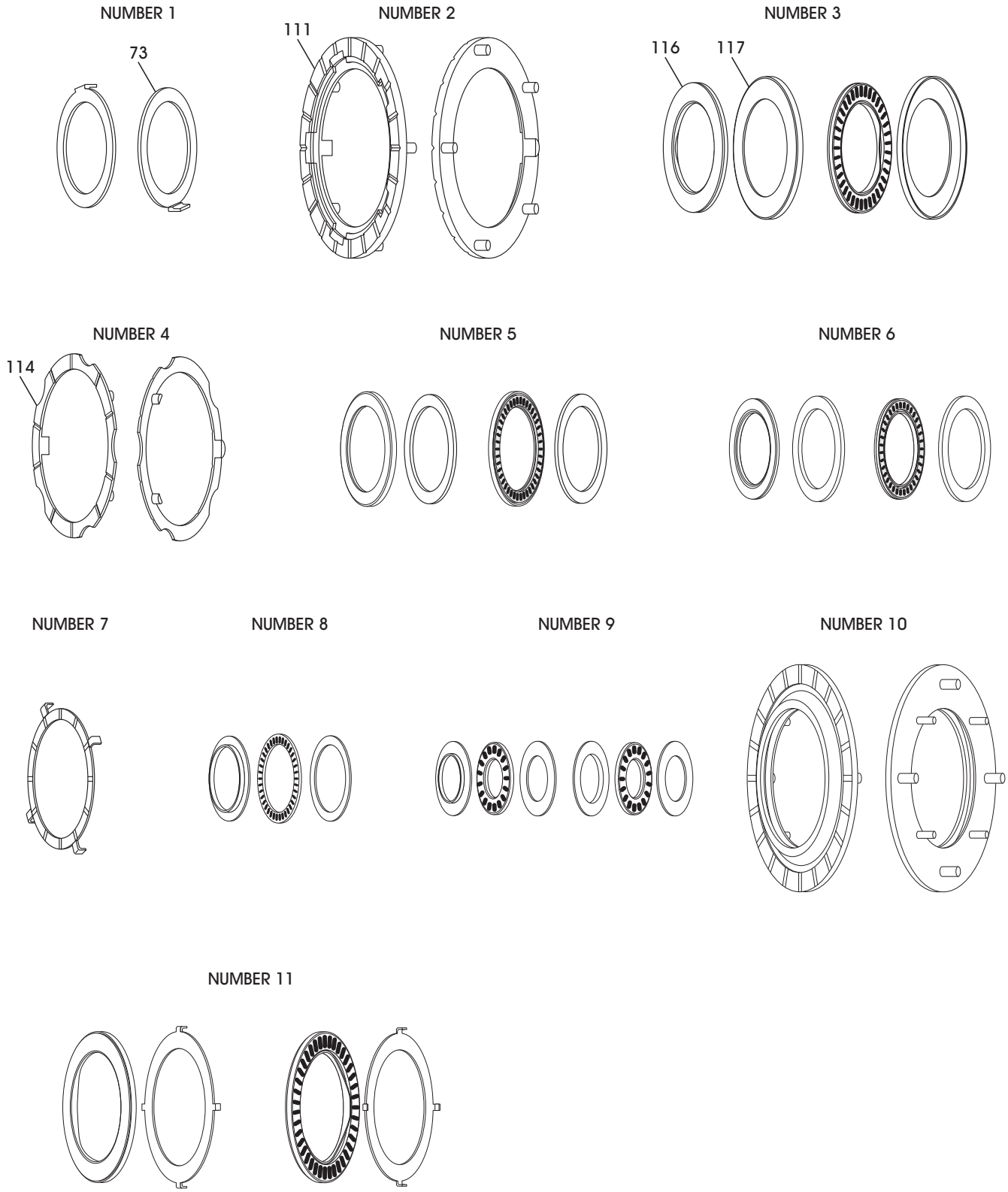

Copyright © 2010 ATSG

Figure 213

WWW.ALL-TRANS.BY

TORQUE SPECIFICATIONS			
Component	N•m	Ft.Lb.	In.Lb.
Converter Housing to Case	19	14	
Oil Pump to Case	19	14	
Oil Pump Cover to Pump Body	11		97
Valve Body and On/Off Solenoid Bolts (10 mm Head)	9		80
Valve Body and Linear Solenoid Brackets (8 mm Head)	7		62
Inside Detent Spring to Case	14	10	
Park Rod Guide to Case	14	10	
Valve Body to Case Bolts	9		80
8-Way and 14-Way Case Connectors to Case	10		88
Temp Sensor to Valve Body	11		97
Oil Pan Drain Plug	27	20	
Oil Pan to Case	7		62
Oil Screen to Valve Body	11		97
Converter Cover Oil Baffle	8		71
Converter Cover Oil Pipes	11		97
Inside Manual Shaft Lever Nut	7		62
Output Speed Sensor to Case	7		62
Input Speed Sensor to Case	10		88
Input and Output Speed Sensor Connector Brackets to Valve Body	7		62
Center Support to Case	22	16	
Center Support Shaft Nut	34	25	
Park Pawl Pivot Pin Plug	14	10	
Transaxle Range Switch to Case	11		97
Integral Cooler to Converter Cover Bolt	35	26	

Note: Some torque specifications are based on the findings in a the virgin unit that was torn down. The manufacturer does not provide any factory torque specifications.

Copyright © 2010 ATSG

Figure 214

"UPDATED" TRANSAXLE CODE INFORMATION			
VEHICLE	YEAR	ENGINE	"09G" TRANSAXLE CODES
Golf Variant,	*2007-1010*	*2.5L*	*HDN, HFU, HRM, JUJ, KBV, KGL,*
Jetta,	*2005-Up*	*2.5L*	*HDN, HFU, HRM, JUJ, KBV, KGL,*
New Beetle,	*1998-Up*	*1.8L*	*GHE, HGA, HTT,*
New Beetle,	*1998-Up*	*2.0L*	*GGZ, HFZ, HMD,*
New Beetle,	*1998-Up*	*2.5L*	*HHG, HTU,*
New Beetle Cabrio,	*2003-Up*	*1.8L*	*GHE, HGA, HTT,*
New Beetle Cabrio,	*2003-Up*	*2.0L*	*GGZ, HFZ, HMD,*
New Beetle Cabrio,	*2003-Up*	*2.5L*	*HHG, HTU,*

"09G" Transaxle Code Location is shown on Page 5.

Figure 215