ENGINE 3 SECTION

This service manual has been prepared to provide SUBARU service personnel with the necessary information and data for the correct maintenance and repair of SUBARU vehicles.
This manual includes the procedures for maintenance, disassembling, reassembling, inspection and adjustment of components and diagnostics for guidance of experienced mechanics.
Please peruse and utilize this manual fully to ensure complete repair work for satisfying our customers by keeping their vehicle in optimum condition. When replacement of parts during repair work is needed, be sure to use SUBARU genuine parts.

All information, illustration and specifications contained in this manual are based on the latest product information available at the time of publication approval.

FUJI HEAVY INDUSTRIES LTD.

FUEL INJECTION (FUEL SYSTEMS)	FU(H6DO)
EMISSION CONTROL (AUX. EMISSION CONTROL DEVICES)	EC(H6DO)
INTAKE (INDUCTION)	IN(H6DO)
MECHANICAL	ME(H6DO)
EXHAUST	EX(H6DO)
COOLING	CO(H6DO)
LUBRICATION	LU(H6DO)
SPEED CONTROL SYSTEMS	SP(H6DO)
IGNITION	IG(H6DO)
STARTING/CHARGING SYSTEMS	SC(H6DO)
ENGINE (DIAGNOSTICS)	EN(H6DO) (diag)
GENERAL DESCRIPTION	GD(H6DO)

G2480BE4

GETtheMANUALS.org

FUEL INJECTION (FUEL SYSTEMS)

FU(H6DO)

		Page
1.	General Description	2
2.	Throttle Body	19
3.	Intake Manifold	21
4.	Engine Coolant Temperature Sensor	29
5.	Crankshaft Position Sensor	31
6.	Camshaft Position Sensor	34
7.	Knock Sensor	37
8.	Throttle Position Sensor	38
9.	Manifold Absolute Pressure Sensor	39
10.	Mass Air Flow and Intake Air Temperature Sensor	41
11.	EGR Valve	42
12.	Fuel Injector	44
13.	Oil Flow Control Solenoid Valve	47
14.	Oil Temperature Sensor	49
15.	Front Oxygen (A/F) Sensor	50
16.	Rear Oxygen Sensor	52
17.	Engine Control Module (ECM)	54
18.	Main Relay	55
19.	Fuel Pump Relay	56
20.	Electronic Throttle Control Relay	57
21.	Fuel Pump Control Unit	58
22.	Fuel	59
23.	Fuel Tank	61
24.	Fuel Filler Pipe	68
25.	Fuel Pump	71
26.	Fuel Level Sensor	73
27.	Fuel Sub Level Sensor	75
28.	Fuel Filter	77
29.	Fuel Damper	79
30.	Fuel Delivery and Evaporation Lines	80
31.	Fuel System Trouble in General	86

GETtheMANUALS.org

1. General Description

A: SPECIFICATION

Fuel tank	Capacity	70 ℓ (18.5 US gal, 15.4 Imp gal)
	Location	Rear floor under
Fuel pump	Type	Impeller
	Shutoff discharge pressure	850 kPa (8.67 kg/cm^2, 123.3 psi), or less
	Discharge rate	155 ℓ (41 US gal, 34.1 Imp gal)/h or more [12 V at 300 kPa (3.06 kg/cm^2, 43.5 psi)]
Fuel filter		In-tank type

GETtheMANUALS.org

B: COMPONENT

1. INTAKE MANIFOLD

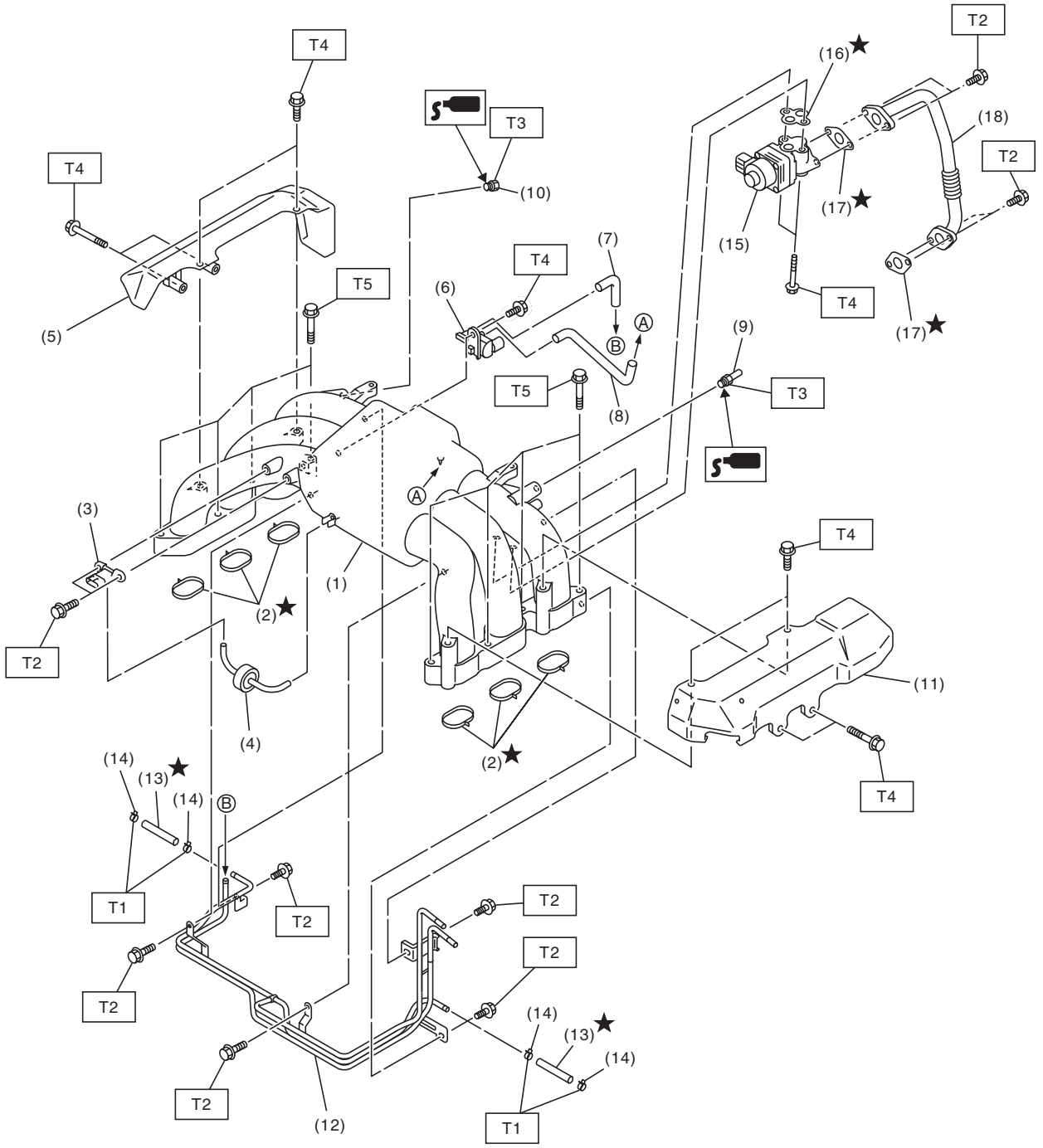

FU-06469

GETtheMANUALS.org

(1)	Intake manifold	(10)	Plug
(2)	O-ring	(11)	Fuel pipe protector LH
(3)	Manifold absolute pressure sensor	(12)	Fuel pipe ASSY
(4)	Filter	(13)	Fuel hose
(5)	Fuel pipe protector RH	(14)	Clamp
(6)	Purge control solenoid valve	(15)	EGR valve
(7)	Hose	(16)	Gasket
(8)	Hose	(17)	Gasket
(9)	Nipple	(18)	EGR pipe

Tightening torque:N·m (kgf-m, ft-lb)	
T1:	***1.25 (0.1, 0.9)***
T2:	***6.4 (0.7, 4.7)***
T3:	***17 (1.7, 12.5)***
T4:	***19 (1.9, 14.0)***
T5:	***25 (2.5, 18.4)***

GETtheMANUALS.org

2. FUEL INJECTOR

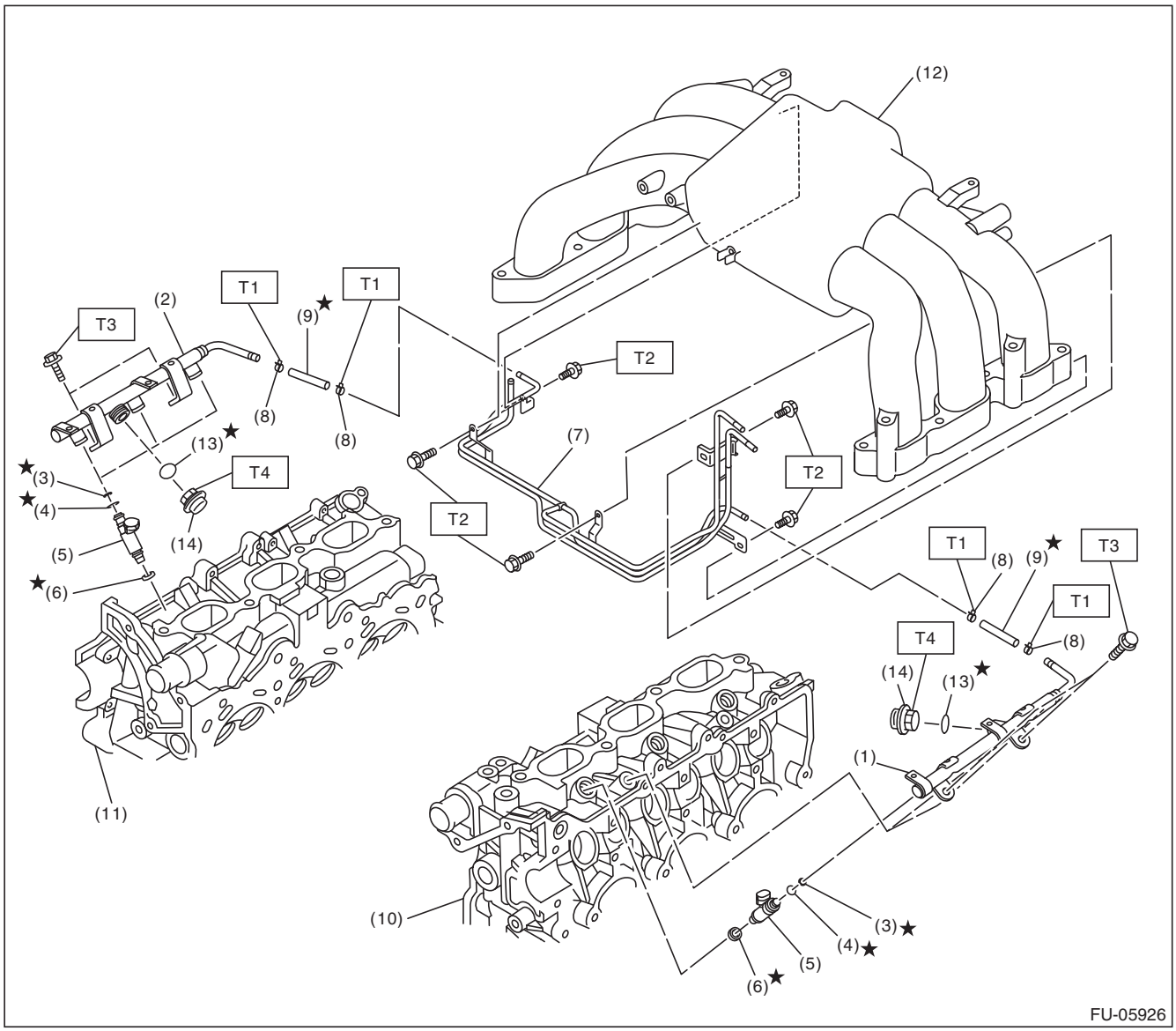

(1)	Fuel injector pipe LH	(8)	Clamp
(2)	Fuel injector pipe RH	(9)	Fuel hose
(3)	O-ring	(10)	Cylinder head LH
(4)	Injection rubber	(11)	Cylinder head RH
(5)	Fuel injector	(12)	Intake manifold
(6)	Seal ring	(13)	Gasket
(7)	Fuel pipe ASSY	(14)	Pulsation damper

Tightening torque:N·m (kgf-m, ft-lb)

T1: 1.25 (0.1, 0.9)
T2: 6.4 (0.7, 4.7)
T3: 19 (1.9, 14.0)
T4: 21.6 (2.2, 15.9)

GETtheMANUALS.org

3. AIR INTAKE SYSTEM

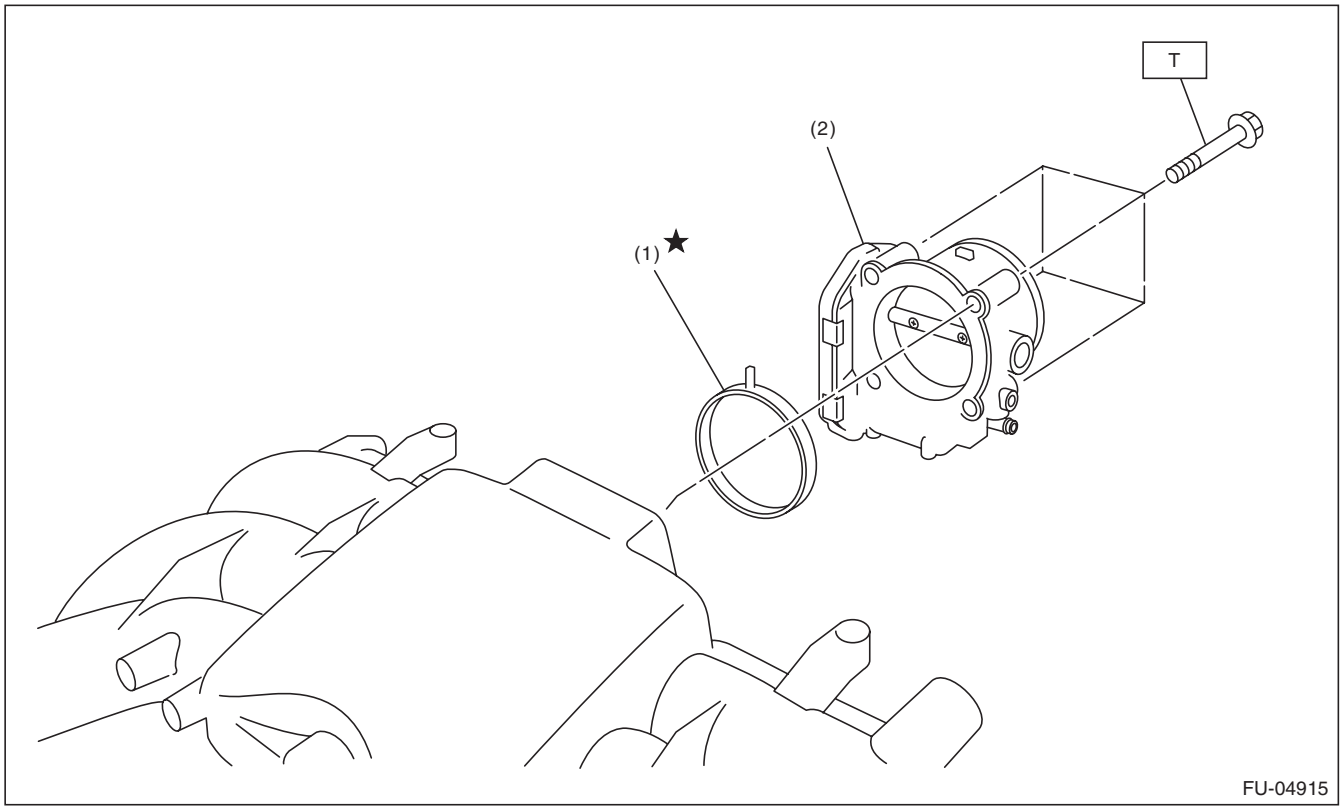

(1) O-ring

(2) Throttle body

Tightening torque:N·m (kgf-m, ft-lb)
T: 8 (0.8, 5.9)

GETtheMANUALS.org

4. SENSOR

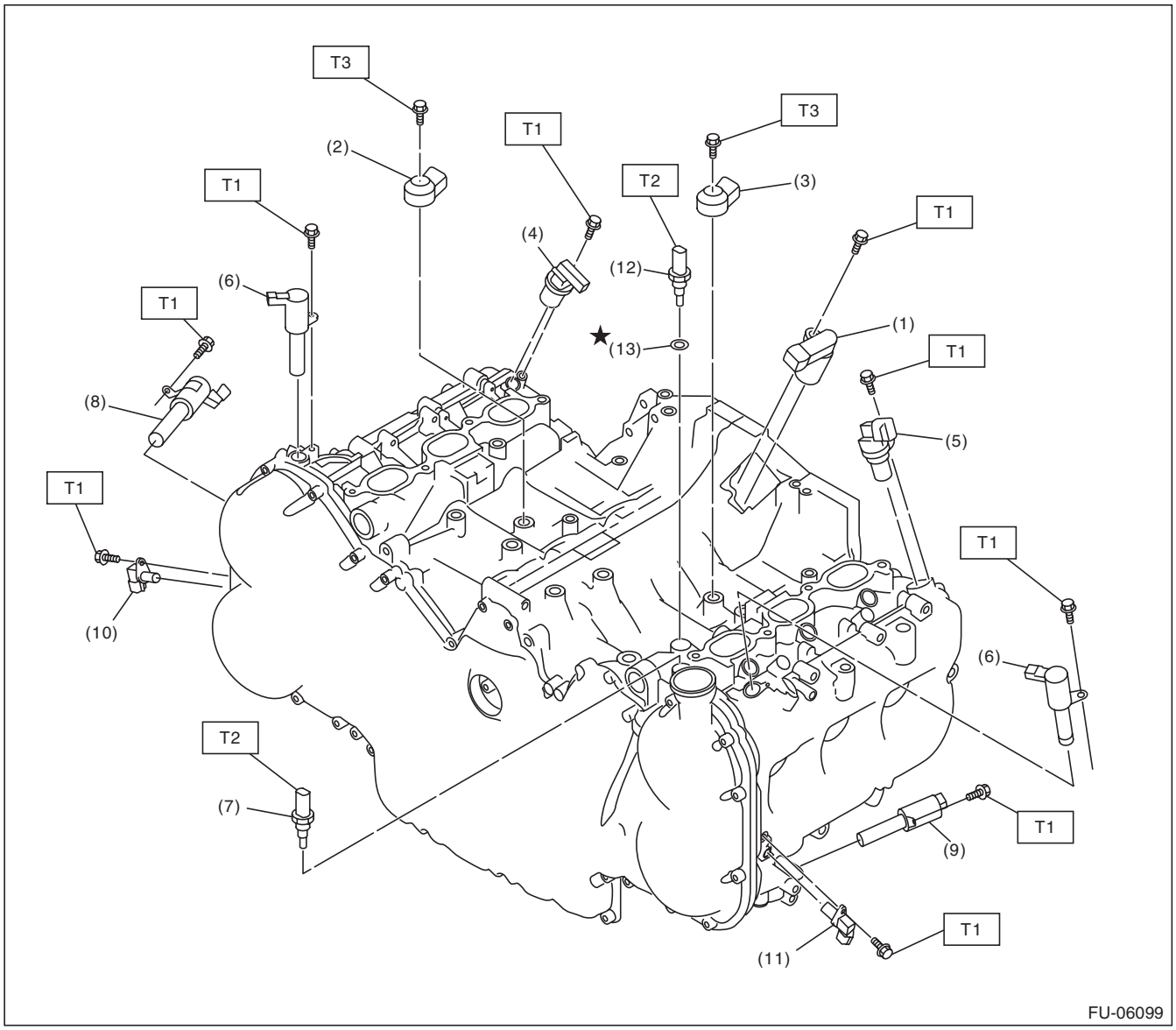

(1)	Crankshaft position sensor	(7)	Oil temperature sensor	(13)	Gasket
(2)	Knock sensor RH	(8)	Exhaust oil flow control solenoid valve RH		
(3)	Knock sensor LH	(9)	Exhaust oil flow control solenoid valve LH		
(4)	Intake camshaft position sensor RH	(10)	Exhaust camshaft position sensor RH		
(5)	Intake camshaft position sensor LH	(11)	Exhaust camshaft position sensor LH		
(6)	Intake oil flow control solenoid valve	(12)	Engine coolant temperature sensor		

Tightening torque:N·m (kgf-m, ft-lb)

T1: 6.4 (0.7, 4.7)

T2: 22 (2.2, 16.2)

T3: 25 (2.5, 18.4)

GETtheMANUALS.org

5. ENGINE HARNESS

Engine harness assembly diagram 1

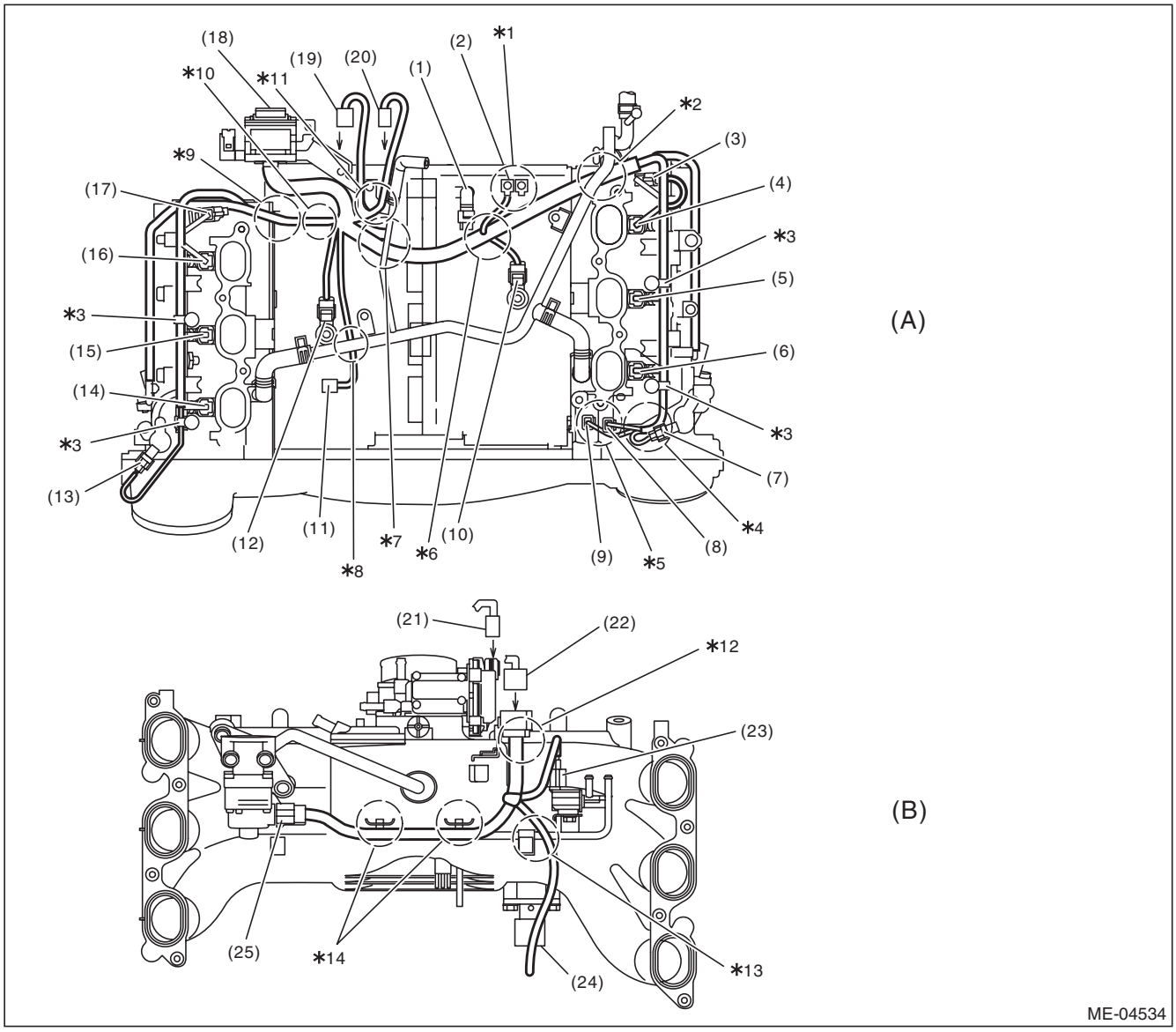

GETtheMANUALS.org

(A)	Cylinder block upper face	(B)	Intake manifold back surface		
(1)	Crankshaft position sensor connector	(10)	Knock sensor LH connector	(19)	Upper/lower connection connector (to intake manifold)
(2)	Engine ground	(11)	Power steering switch connector	(20)	Electronic throttle control connector (to intake manifold)
(3)	Intake camshaft position sensor LH connector	(12)	Knock sensor RH connector	(21)	Electronic throttle control connector (from upper part of the cylinder block)
(4)	#6 injector connector	(13)	Intake oil flow control solenoid valve RH connector	(22)	Upper/lower connection connector (from upper part of the cylinder block)
(5)	#4 injector connector	(14)	#1 injector connector	(23)	Purge control solenoid valve connector
(6)	#2 injector connector	(15)	#3 injector connector	(24)	Manifold absolute pressure sensor connector
(7)	Intake oil flow control solenoid valve LH connector	(16)	#5 injector connector	(25)	EGR valve connector
(8)	Oil temperature sensor connector	(17)	Intake camshaft position sensor RH connector		
(9)	Engine coolant temperature sensor connector	(18)	Engine harness docking connector		

*1: Install so that engine ground terminals face the rear side of vehicle.
*2: Route under the heater pipe.
*3: Attach the engine harness fixing clip to the fuel pipe stay.
*4: Route from the cutout portion on the fuel pipe protector LH.
*5: Be careful not to mix up the connectors of oil temperature sensor and engine coolant temperature sensor.
*6: Route between crankshaft position sensor and knock sensor LH.
*7: Route under the heater pipe.
*8: Route under the heater pipe.
*9: Route under the fuel pipe.
*10: Attach the engine harness fixing clip to the fixing boss on the cylinder block.
*11: Route over the heater pipe stay.
*12: Securely install the engine harness fixing stay.
*13: Route outside the fuel pipe.
*14: Attach the engine harness fixing clip to the fixing stay on the intake manifold.

GETtheMANUALS.org

Engine harness assembly diagram 2

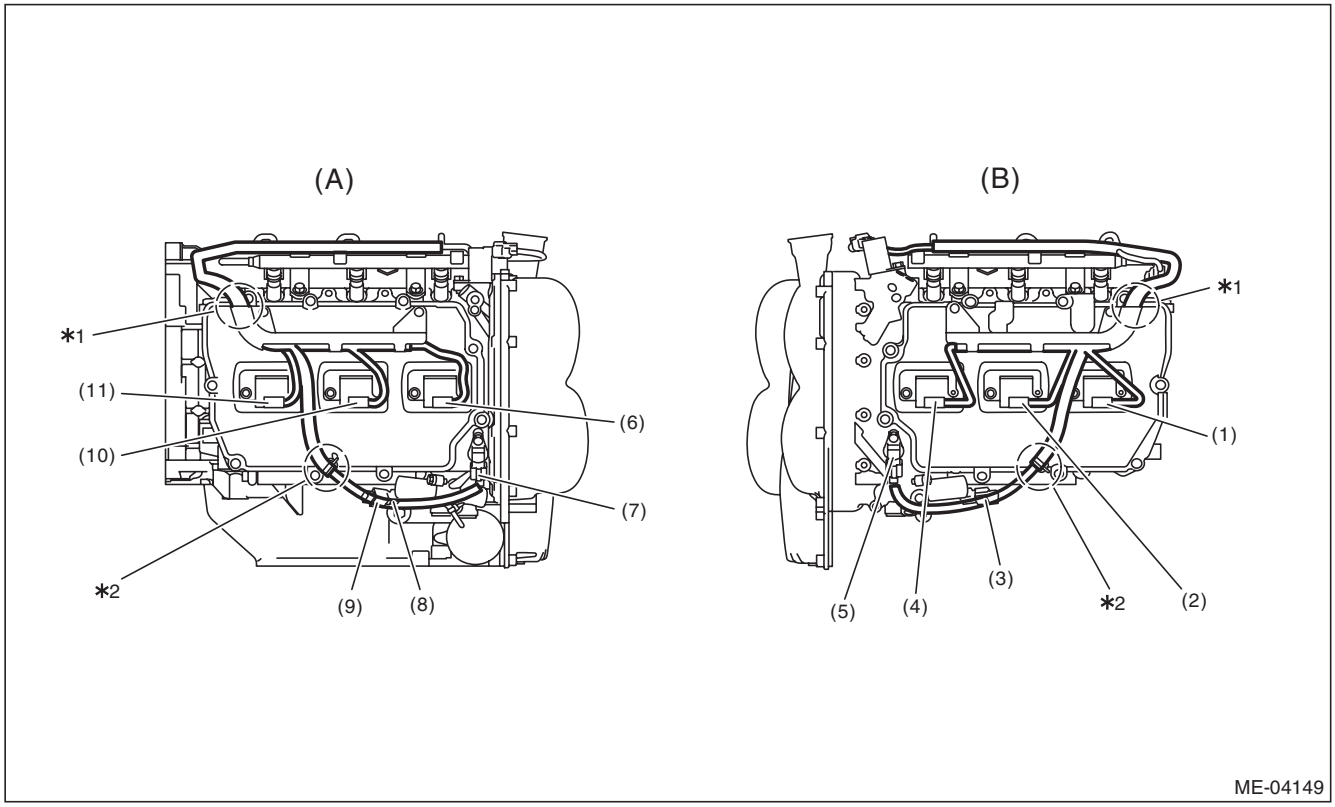

(A)	Right side of the engine	(B)	Left side of the engine		
(1)	#6 ignition coil connector	(5)	Exhaust camshaft position sensor LH connector	(9)	Exhaust oil flow control valve solenoid RH connector
(2)	#4 ignition coil connector	(6)	#1 injector connector	(10)	#3 ignition coil connector
(3)	Exhaust oil flow control valve solenoid LH connector	(7)	Exhaust camshaft position sensor RH connector	(11)	#5 ignition coil connector
(4)	#2 ignition coil connector	(8)	Oil pressure switch connector		

*1: Align the engine harness stay end with the end of engine harness identification tape.
*2: Attach the engine harness fixing clip to the fixing boss on the rocker cover.

GETtheMANUALS.org

6. FUEL TANK

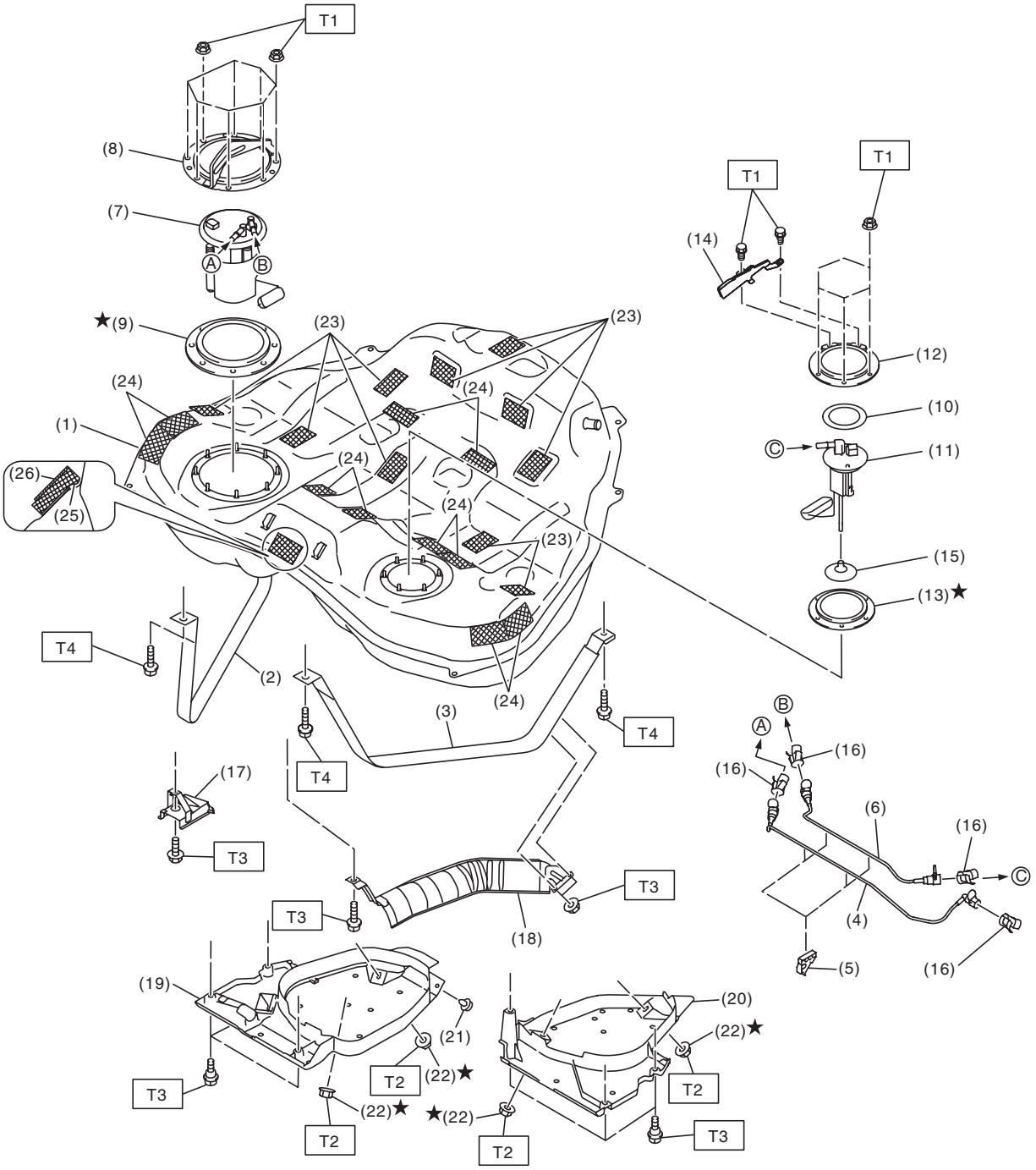

FU-06684

GETtheMANUALS.org

(1) Fuel tank
(2) Fuel tank band RH
(3) Fuel tank band LH
(4) Fuel delivery tube
(5) Tube clamp
(6) Fuel sub delivery tube
(7) Fuel pump assembly
(8) Fuel pump upper plate
(9) Fuel pump gasket
(10) Fuel sub level sensor upper plate cushion
(11) Fuel sub level sensor
(12) Fuel sub level sensor upper plate
(13) Fuel sub level sensor gasket
(14) Fuel sub level sensor protector
(15) Fuel sub level sensor filter
(16) Retainer
(17) Stopper
(18) Heat shield cover
(19) Fuel tank protector RH
(20) Fuel tank protector LH
(21) Clip
(22) Self-locking nut
(23) Cushion
(24) Cushion
(25) Cushion
(26) Cushion

Tightening torque:N·m (kgf-m, ft-lb)

T1: 4.4 (0.4, 3.2)
T2: 9 (0.9, 6.6)
T3: 18 (1.8, 13.3)
T4: 33 (3.4, 24.3)

GETtheMANUALS.org

7. FUEL LINE

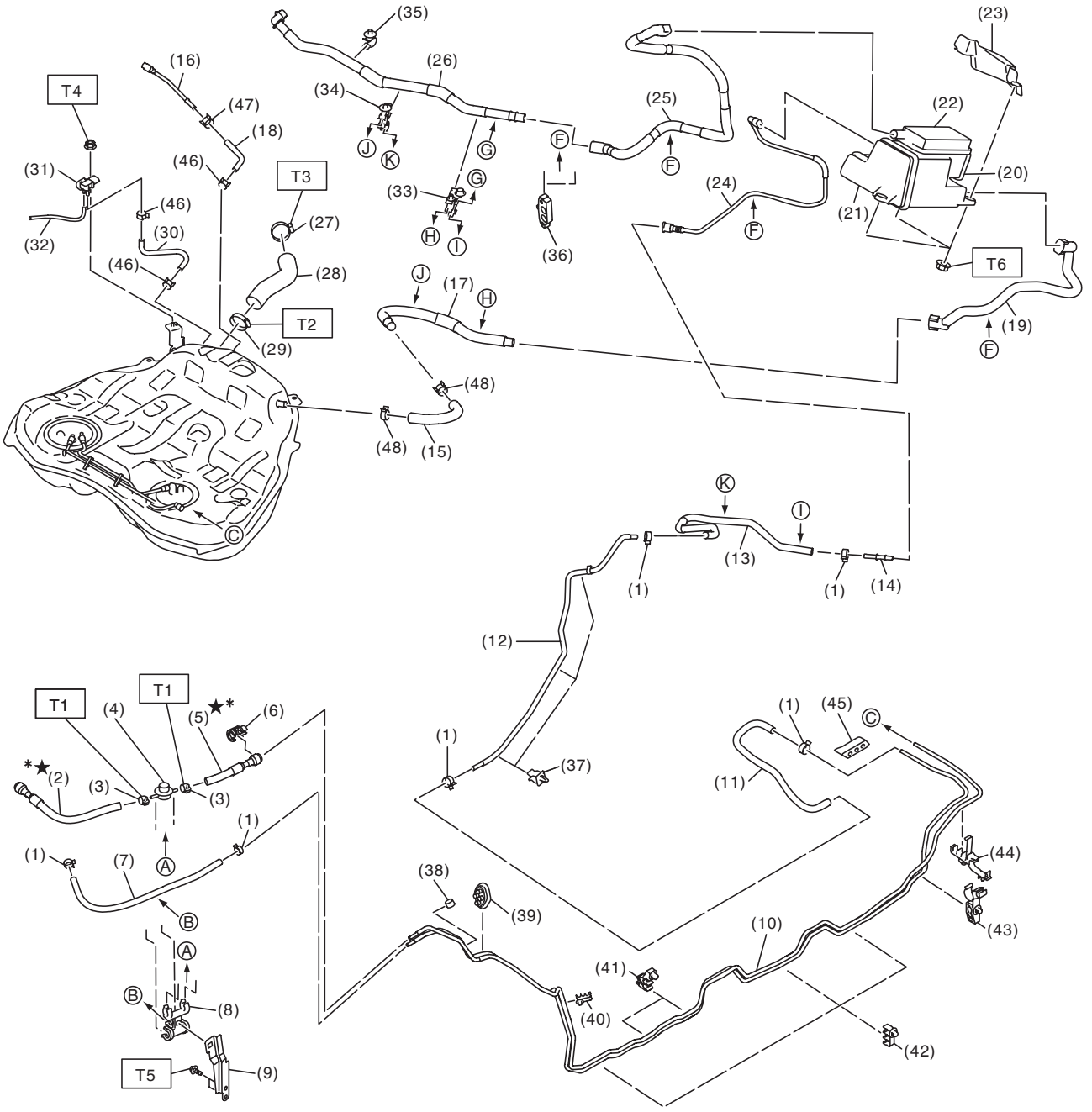

FU-06712

GETtheMANUALS.org

(1) Clip
(2) Fuel delivery hose A
(3) Clamp
(4) Fuel damper
(5) Fuel delivery hose B
(6) Connect check cover
(7) Evaporation hose
(8) Fuel damper holder
(9) Damper bracket
(10) Fuel pipe ASSY
(11) Purge hose A
(12) Purge pipe
(13) Purge hose B
(14) Connector
(15) Air vent hose A
(16) Circulate tube
(17) Air vent tube
(18) Circulate hose
(19) Vent tube
(20) Drain valve
(21) Canister
(22) Drain filter
(23) Canister protector
(24) Charge tube
(25) Canister drain tube
(26) Drain tube ASSY
(27) Clamp
(28) Fuel filler hose
(29) Clamp
(30) Pressure hose
(31) Fuel tank pressure sensor
(32) Vacuum hose
(33) Tube clamp
(34) Tube clamp
(35) Tube clamp
(36) Tube clamp
(37) Pipe clamp
(38) Bushing
(39) Fuel pipe front grommet
(40) Pipe clamp
(41) Pipe clamp
(42) Pipe clamp
(43) Pipe clamp
(44) Pipe clamp
(45) Fuel pipe rear grommet
(46) Clip
(47) Clip
(48) Clip

Tightening torque:N·m (kgf-m, ft-lb)	
T1:	***1.25 (0.1, 2.9)***
T2:	***2 (0.2, 1.5)***
T3:	***2.5 (0.3, 1.8)***
T4:	***7.35 (0.7, 5.4)***
T5:	***7.5 (0.8, 5.5)***
T6:	***8 (0.8, 5.9)***

*: It can be reused if the quick connector side is disconnected.

GETtheMANUALS.org

8. FUEL FILLER PIPE

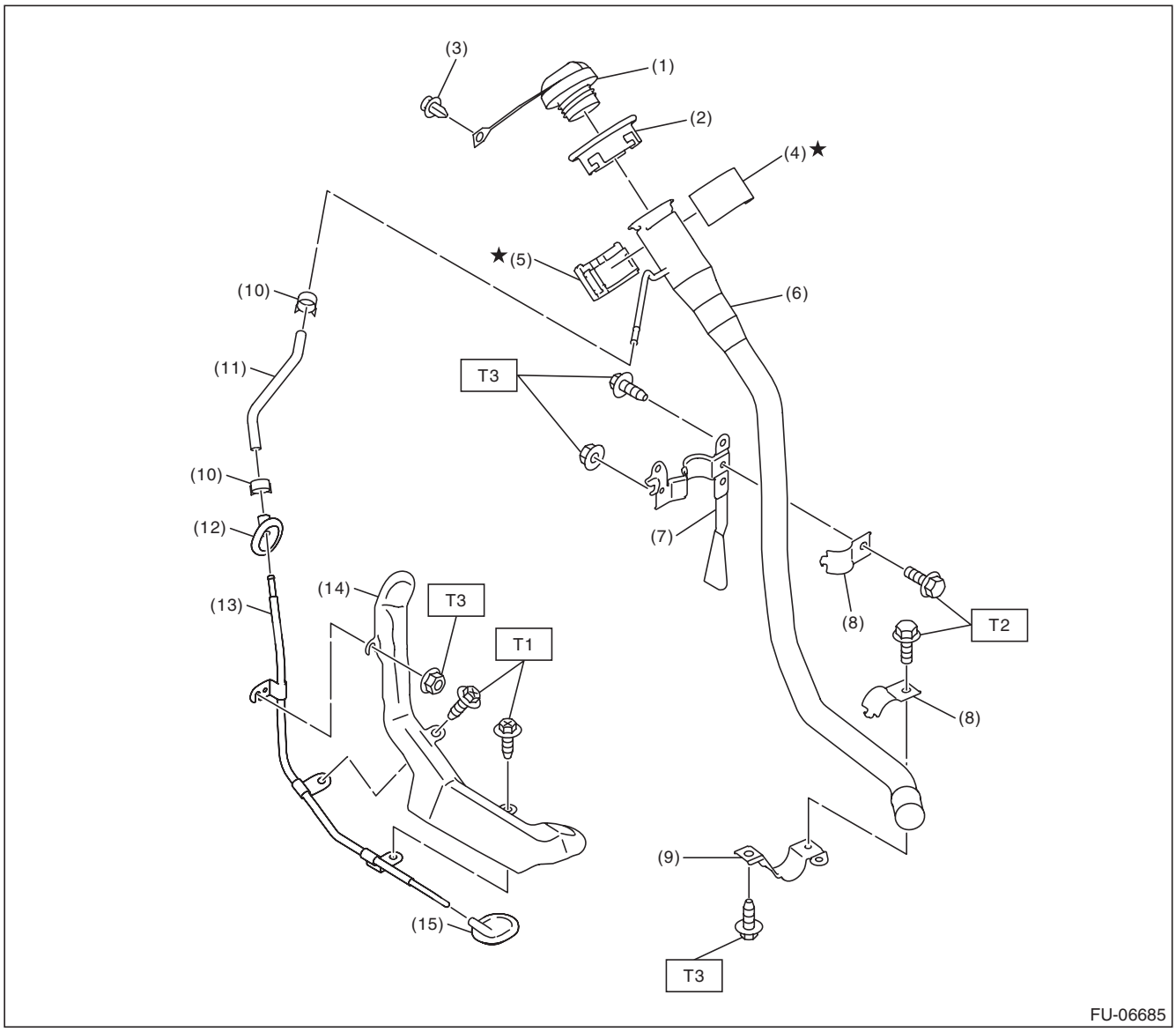

(1) Fuel filler cap
(2) Fuel filler pipe protector
(3) Clip
(4) Neck holder A
(5) Neck holder B
(6) Fuel filler pipe
(7) Fuel filler pipe bracket A
(8) Fuel filler pipe bracket B
(9) Fuel filler pipe bracket C
(10) Clip
(11) Evaporation hose
(12) Grommet
(13) Evaporation pipe
(14) Evaporation pipe protector
(15) Grommet

Tightening torque:N·m (kgf-m, ft-lb)	
T1:	***1 (0.1, 0.7)***
T2:	***7.35 (0.7, 5.4)***
T3:	***7.5 (0.8, 5.5)***

GETtheMANUALS.org

9. FUEL PUMP

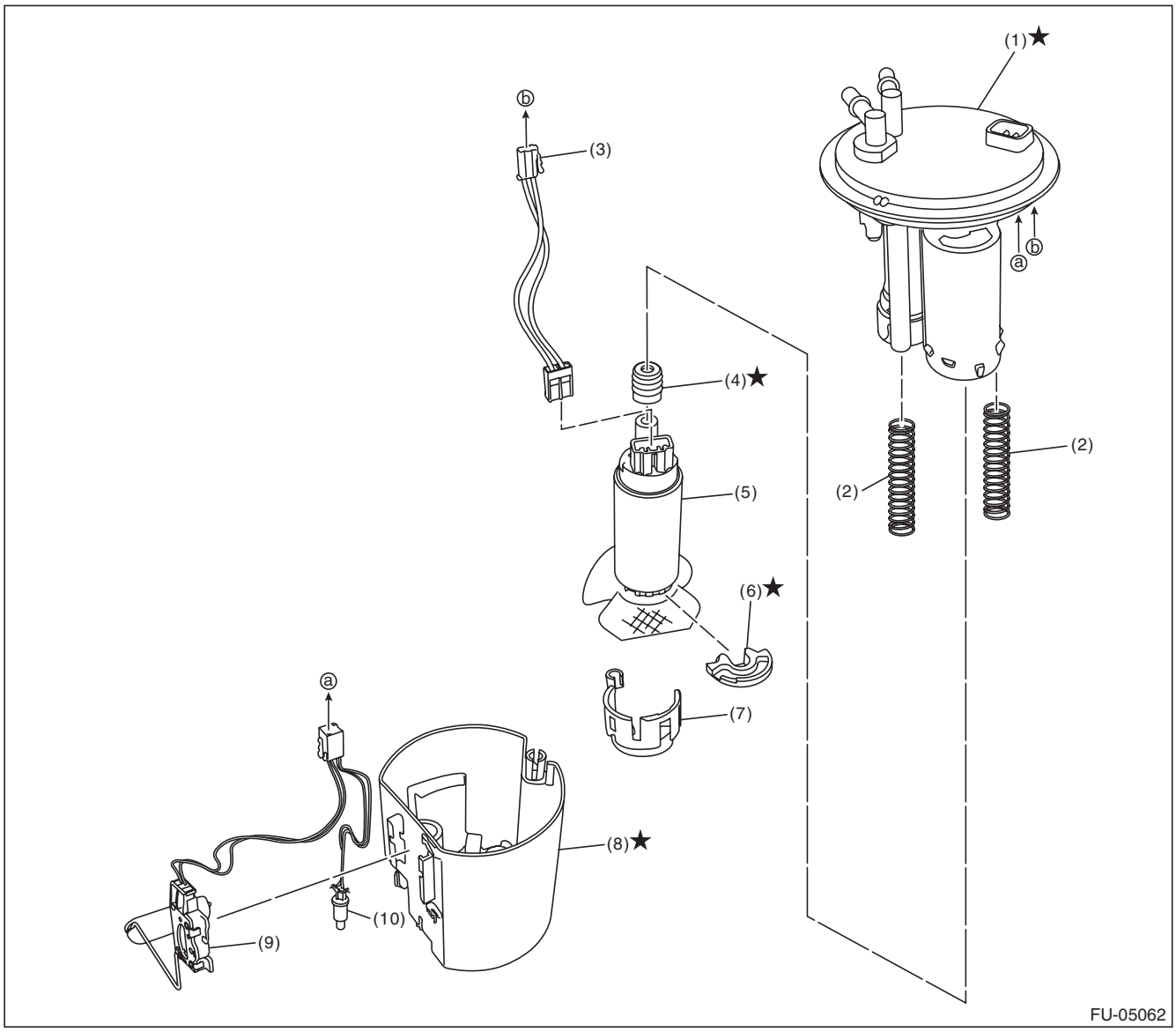

(1)	Fuel filter assembly	(5)	Fuel pump	(9)	Fuel level sensor
(2)	Pump module spring	(6)	Support rubber cushion	(10)	Fuel temperature sensor
(3)	Fuel pump harness	(7)	Fuel pump holder		
(4)	Gasket spacer	(8)	Fuel chamber ASSY		

GETtheMANUALS.org

C: CAUTION

- Wear appropriate work clothing, including a cap, protective goggles and protective shoes when performing any work.
- Remove contamination including dirt and corrosion before removal, installation or disassembly.
- Keep the disassembled parts in order and protect them from dust and dirt.
- Before removal, installation or disassembly, be sure to clarify the failure. Avoid unnecessary removal, installation, disassembly and replacement.
- Vehicle components are extremely hot after driving. Be wary of receiving burns from heated parts.
- Be sure to tighten fasteners including bolts and nuts to the specified torque.
- Place shop jacks or rigid racks at the specified points.
- Before disconnecting connectors of sensors or units, be sure to disconnect the ground cable from battery.
- Place “NO OPEN FLAMES” signs near the working area.
- Prepare a container and cloth to prevent scattering of fuels when performing work where fuels can be spilled. If the oil spills, wipe it off immediately to prevent from penetrating into floor or flowing out for environmental protection.
- Follow all government and local regulations concerning disposal of refuse when disposing fuel.

GETtheMANUALS.org

D: PREPARATION TOOL

1. SPECIAL TOOL

ILLUSTRATION	TOOL NUMBER	DESCRIPTION	REMARKS
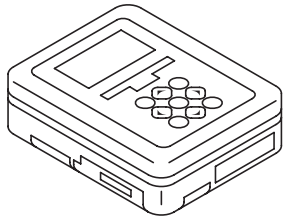 ST1B022XU0	1B022XU0	SUBARU SELECT MONITOR III KIT	Used for draining fuel and each inspection.
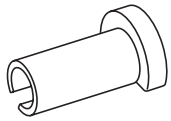 ST42099AE000	42099AE000	QUICK CONNECTOR RELEASE	Used for removing the quick connector.
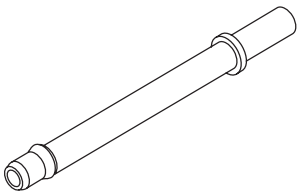 ST18471AA000	18471AA000	FUEL PIPE ADAPTER	Used for draining fuel.

2. GENERAL TOOL

TOOL NAME	REMARKS
Circuit tester	Used for measuring resistance and voltage.
Oscilloscope	Used for inspecting the waveform of each sensor.

GETtheMANUALS.org

2. Throttle Body

A: REMOVAL

1) Remove the collector cover.

NOTE:
Follow the steps below when removing the collector cover.
(1) Pull up the two points at the rear (A).
(2) Pull up the two points at the front (B) while moving them forward.

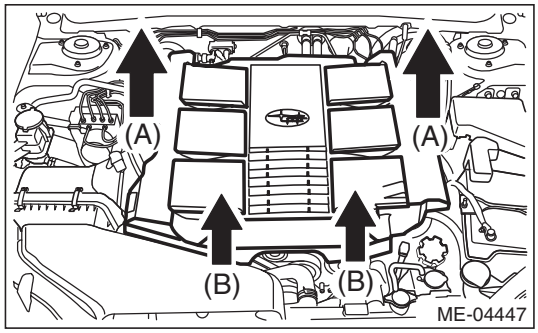

2) Disconnect the ground cable from battery.
3) Loosen the clamp (A) which connects the air intake boot assembly.
4) Loosen the bolt (B) which secures the air intake boot assembly to the collector cover bracket.

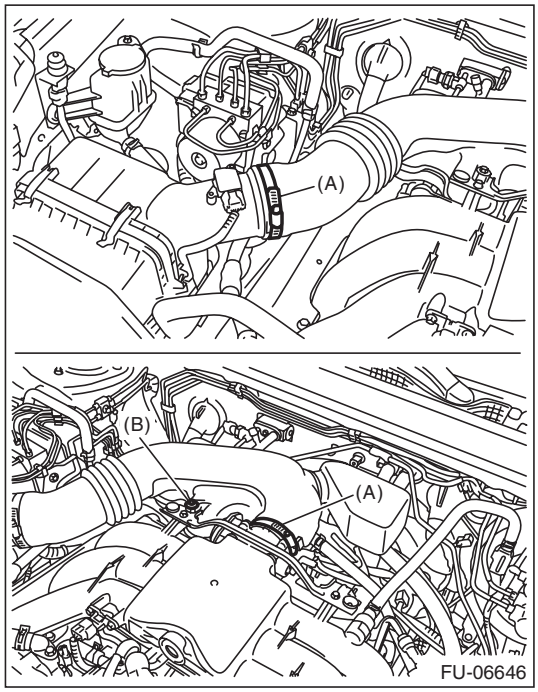

5) Remove the air intake boot assembly, and move it to the left side wheel apron.

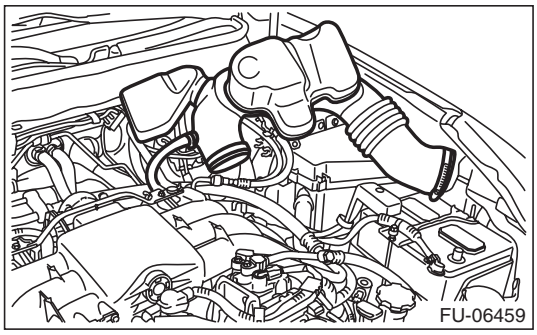

6) Disconnect the connector from the throttle body.

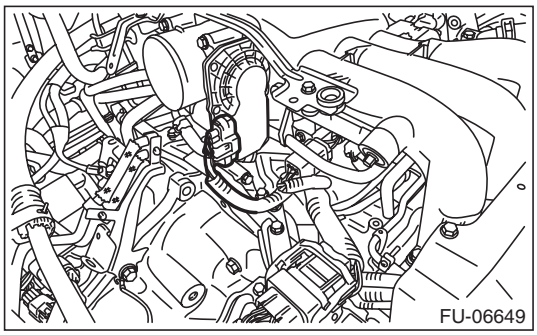

7) Disconnect the engine coolant hoses (A) from throttle body.
8) Remove the bolts which secure the throttle body to the intake manifold.

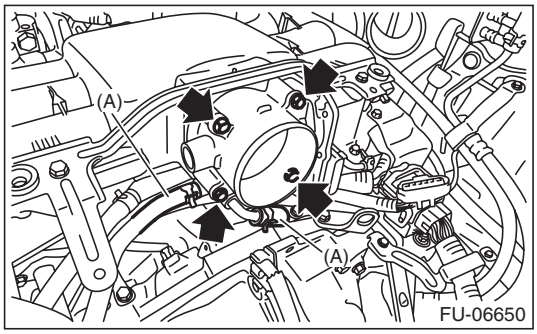

GETtheMANUALS.org

B: INSTALLATION

Install in the reverse order of removal.

NOTE:
Use new O-rings.

Tightening torque:
8 N·m (0.8 kgf-m, 5.9 ft-lb)

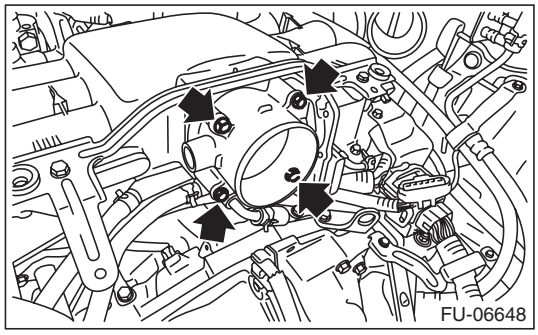

Tightening torque:
Clamp (A)
3 N·m (0.3 kgf-m, 2.2 ft-lb)
Bolt (B)
6.5 N·m (0.7 kgf-m, 4.8 ft-lb)

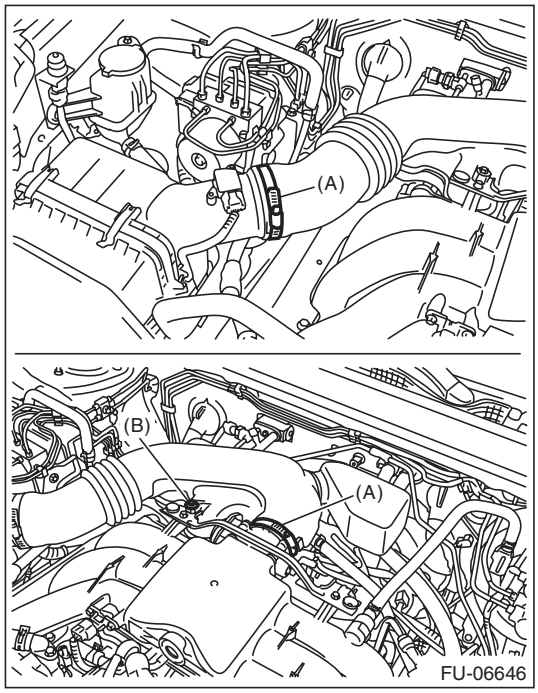

C: INSPECTION

1. THROTTLE SENSOR (METHOD WITH CIRCUIT TESTER)

1) Remove the glove box lid assembly. <Ref. to EI-66, REMOVAL, Glove Box.>
2) Turn the ignition switch to ON. (engine OFF)
3) Measure the voltage between ECM connector terminals.

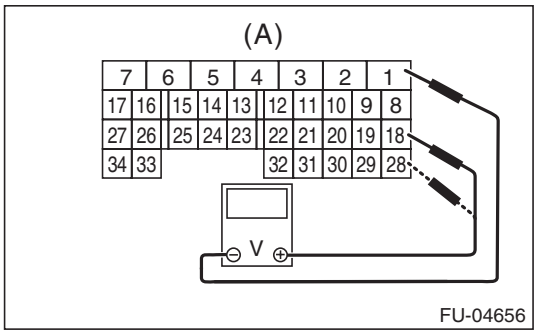

(A) To ECM connector

Throttle sensor	Accelerator pedal	Terminal No.	Standard
Main	Not depressed (Full closed)	18 (+) and 1 (–)	Approx. 0.6 V
	Depressed (Full opened)		Approx. 4.04 V
Sub	Not depressed (Full closed)	28 (+) and 1 (–)	Approx. 1.48 V
	Depressed (Full opened)		Approx. 4.23 V

4) After inspection, install the related parts in the reverse order of removal.

2. THROTTLE SENSOR (METHOD WITH SUBARU SELECT MONITOR)

1) Turn the ignition switch to ON. (engine OFF)
2) Read the throttle opening angle signal and voltage of throttle sensor using Subaru Select Monitor. <Ref. to EN(H6DO)(diag)-35, READ CURRENT DATA FOR ENGINE (NORMAL MODE), OPERATION, Subaru Select Monitor.>

Throttle sensor	Throttle opening angle signal	Standard
Main	0.0%	Approx. 0.6 V
	100.0%	Approx. 4.04 V
Sub	0.0%	Approx. 1.48 V
	100.0%	Approx. 4.23 V

3. OTHER INSPECTIONS

1) Check that the throttle body has no deformation, cracks or other damages.
2) Check that the engine coolant hose has no cracks, damage or loose part.

GETtheMANUALS.org

3. Intake Manifold

A: REMOVAL

1) Remove the collector cover.

NOTE:
Follow the steps below when removing the collector cover.
(1) Pull up the two points at the rear (A).
(2) Pull up the two points at the front (B) while moving them forward.

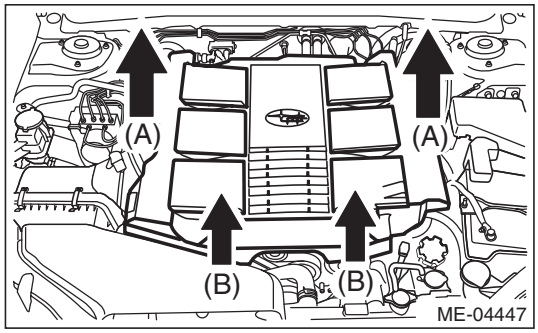

2) Release the fuel pressure. <Ref. to FU(H6DO)-59, RELEASING OF FUEL PRESSURE, PROCEDURE, Fuel.>
3) Remove the battery and battery carrier. <Ref. to SC(H4SO)-28, REMOVAL, Battery.>
4) Open the fuel filler lid and remove the fuel filler cap.
5) Disconnect the brake booster vacuum hose.

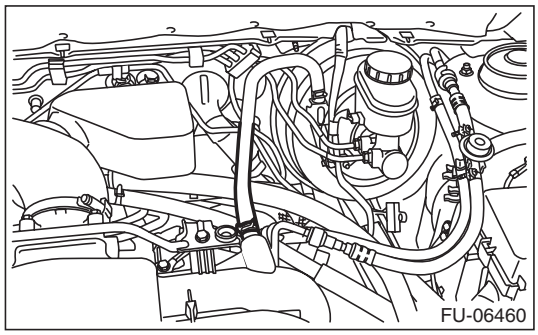

6) Loosen the clamp (A) which connects the air intake boot assembly.

7) Loosen the bolt (B) which secures the air intake boot assembly to the collector cover bracket.

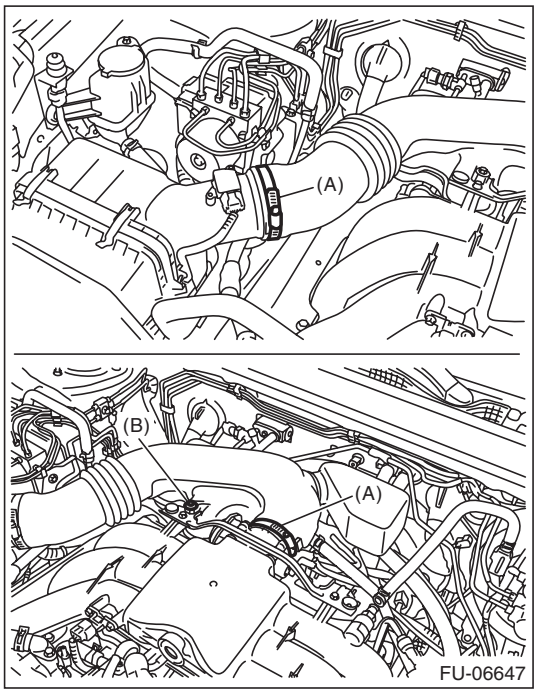

8) Remove the air intake boot assembly, and move it to the left side wheel apron.

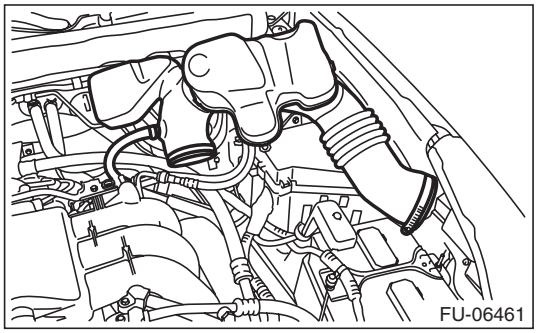

9) Remove the air cleaner case. <Ref. to IN(H6DO)-5, REMOVAL, Air Cleaner Case.>
10) Disconnect the following connector.
(1) Remove the securing clips from the two locations on the fuel pipe protector LH.

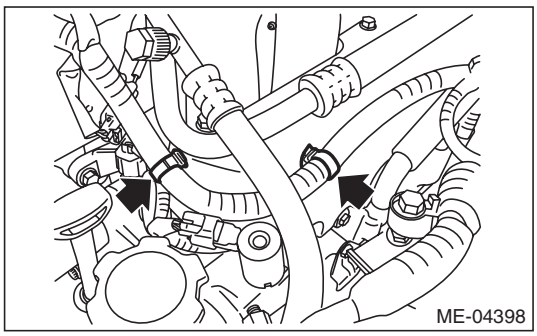

(2) Generator connector
(3) Generator terminal B

GETtheMANUALS.org

(4) Remove the harness cover from collector cover bracket.
(5) A/C compressor solenoid connector
(6) Flow sensor connector

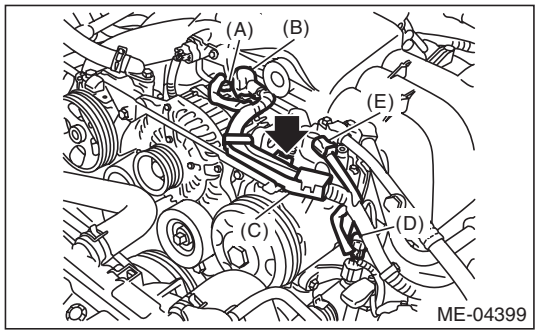

(A) Generator connector
(B) Terminal B
(C) Harness cover
(D) A/C compressor solenoid connector
(E) Flow sensor connector

(7) Slide the harness and connector to the battery side.

11) Disconnect the PCV hose.

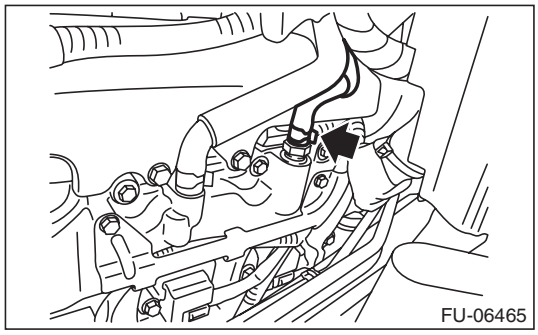

12) Disconnect the connector (A) from throttle body.

13) Disconnect the engine harness connector (B).

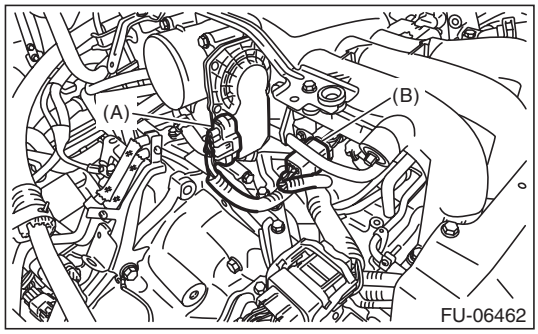

14) Remove the throttle body from the intake manifold.

NOTE:
Do not disconnect the inlet and outlet hoses of engine coolant.

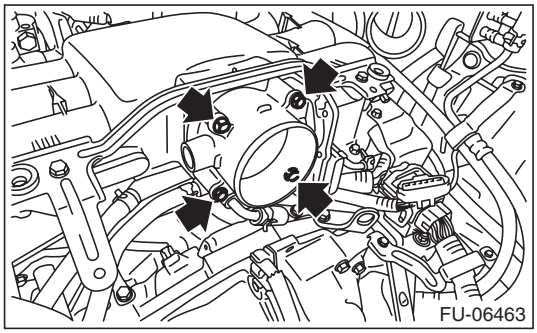

15) Disconnect the fuel delivery hose and evaporation hose.

CAUTION:
- **Be careful not to spill fuel.**
- **Catch the fuel from hoses using a container or cloth.**

(1) Attach ST to the fuel delivery pipe and push ST in the direction of arrow mark to disconnect the quick connector of the fuel delivery hose.

ST 42099AE000 QUICK CONNECTOR RELEASE

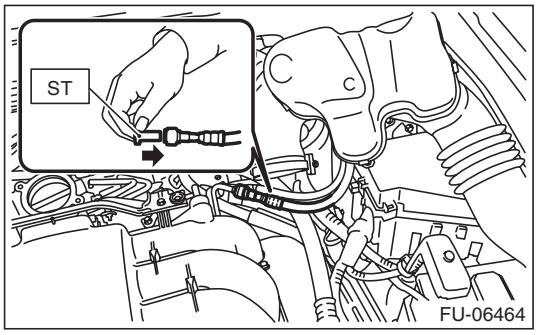

(2) Remove the clip and disconnect the evaporation hose.

16) Remove the fuel pipe protector LH.

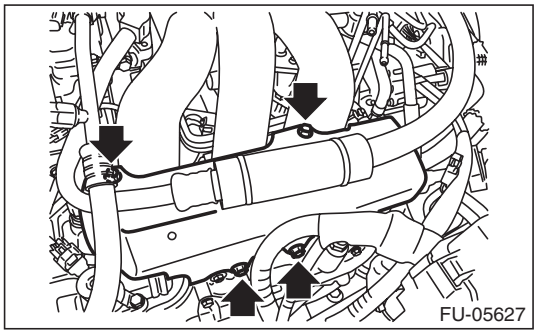

17) Disconnect #2, #4, and #6 fuel injector connectors.

GETtheMANUALS.org

18) Disconnect the connectors of the oil temperature sensor, engine coolant temperature sensor and intake oil flow control solenoid valve LH.

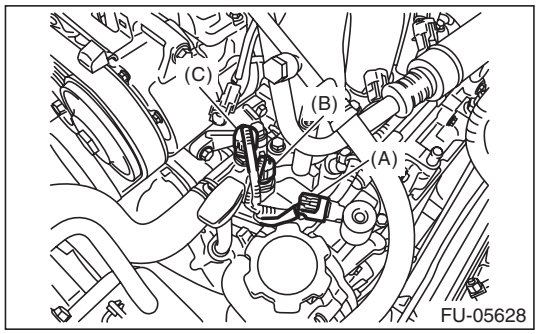

(A) Intake oil flow control solenoid valve LH
(B) Oil temperature sensor
(C) Engine coolant temperature sensor

19) Remove the bolts which hold fuel injector pipe LH to cylinder head.

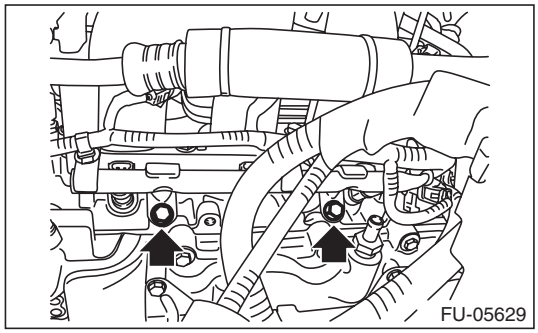

20) Disconnect the connectors of the intake oil flow control solenoid valve RH.

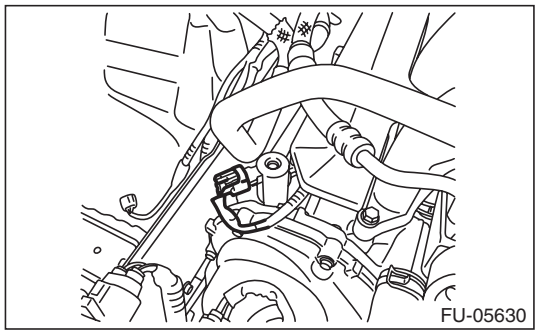

21) Remove the fuel pipe protector RH.

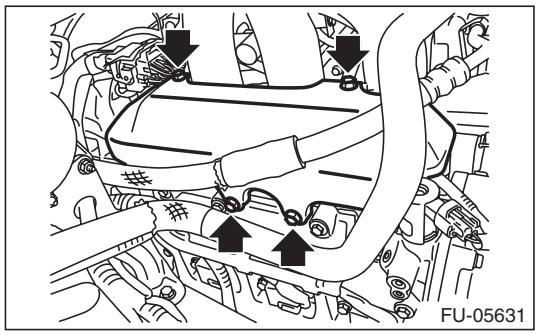

22) Disconnect #1, #3, and #5 fuel injector connectors.
23) Remove the bolts which hold the fuel injector pipe RH to the cylinder head.

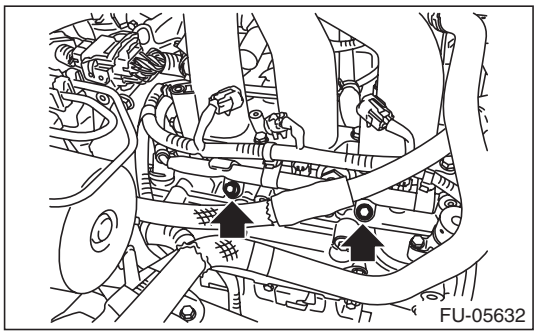

24) Remove the bolts which hold the intake manifold to the cylinder head.

- LH side

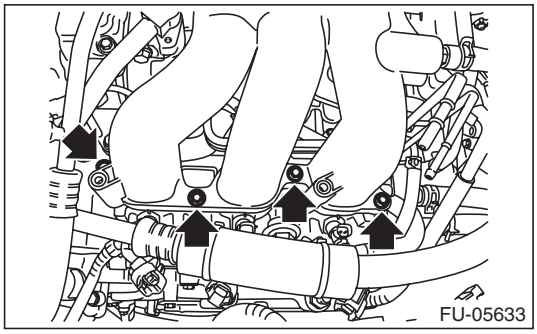

- RH side

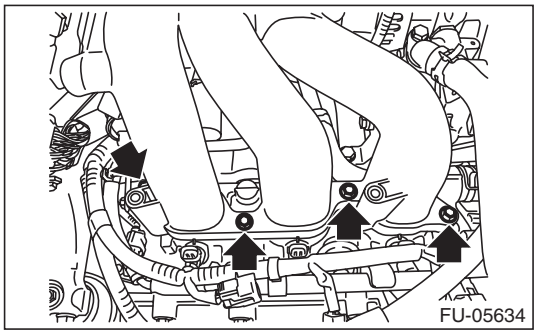

25) Remove the EGR pipe securing bolt.

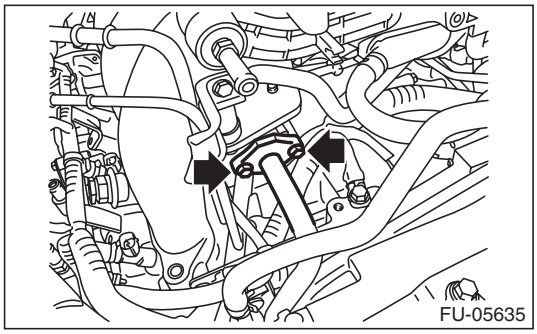

GETtheMANUALS.org

26) Remove the engine harness from the fuel injector pipe RH.

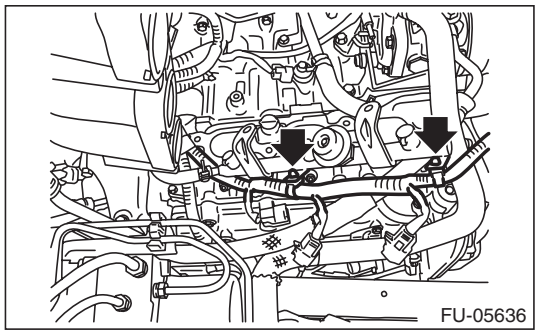

27) Remove the engine harness from the fuel injector pipe LH.

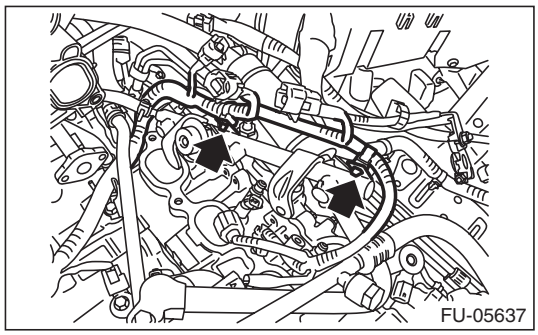

28) Remove the intake manifold.

B: INSTALLATION

1) Install the engine harness to fuel injector pipe LH.

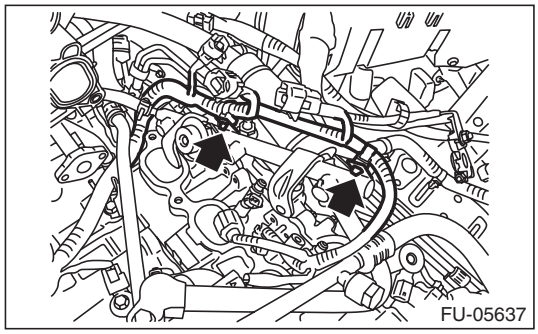

2) Install the engine harness to fuel injector pipe RH.

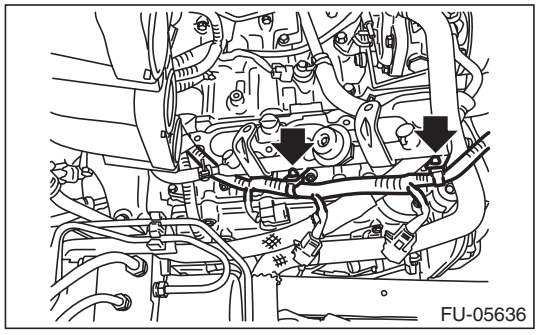

3) Install the intake manifold onto cylinder heads.

NOTE:
Use new O-rings.

Tightening torque:
25 N·m (2.5 kgf-m, 18.4 ft-lb)

- RH side

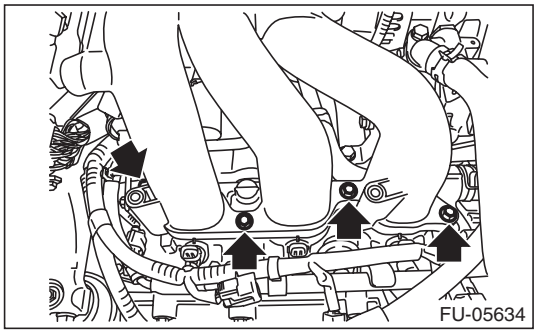

- LH side

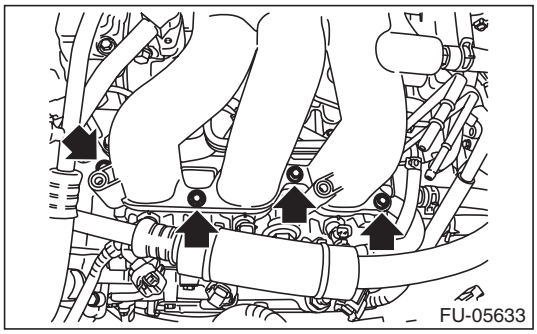

4) Install the EGR pipe securing bolt.

NOTE:
Use a new gasket.

Tightening torque:
6.4 N·m (0.7 kgf-m, 4.7 ft-lb)

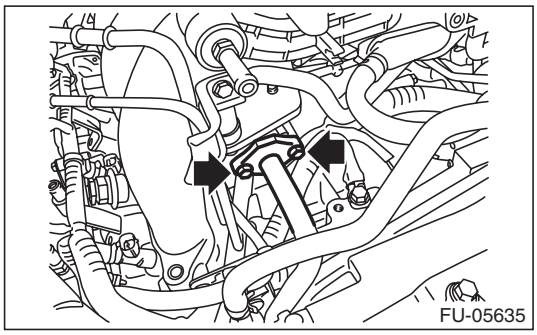

GETtheMANUALS.org

5) Install the bolts which hold fuel injector pipe RH to cylinder head.

NOTE:
Use new O-rings, injection rubbers, and seal rings.

Tightening torque:
19 N·m (1.9 kgf-m, 14.0 ft-lb)

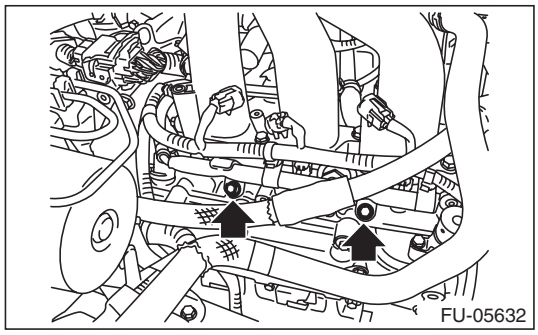

6) Connect #1, #3, and #5 fuel injector connectors.
7) Install the fuel pipe protector RH.

Tightening torque:
19 N·m (1.9 kgf-m, 14.0 ft-lb)

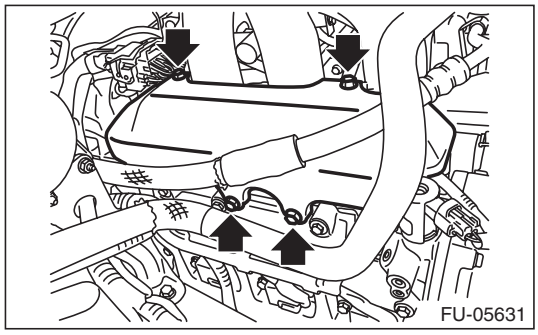

8) Connect the connectors of the intake oil flow control solenoid valve RH.

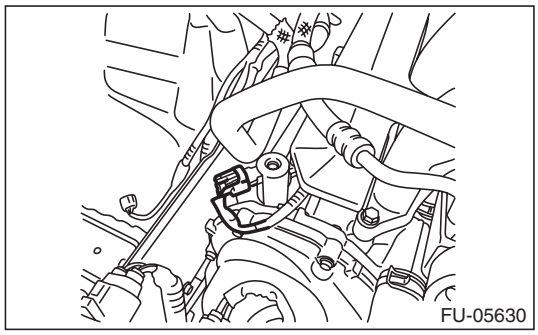

9) Install the bolts which hold fuel injector pipe LH to cylinder head.

NOTE:
Use new O-rings, injection rubbers, and seal rings.

Tightening torque:
19 N·m (1.9 kgf-m, 14.0 ft-lb)

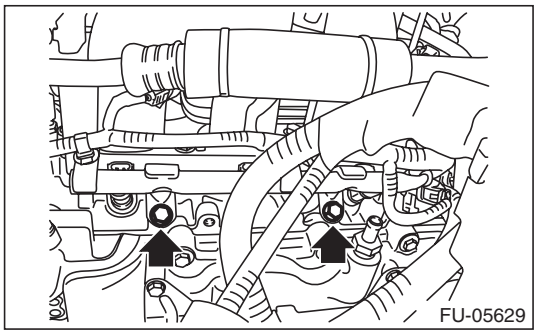

10) Connect the connectors of the oil temperature sensor, engine coolant temperature sensor and intake oil flow control solenoid valve LH.

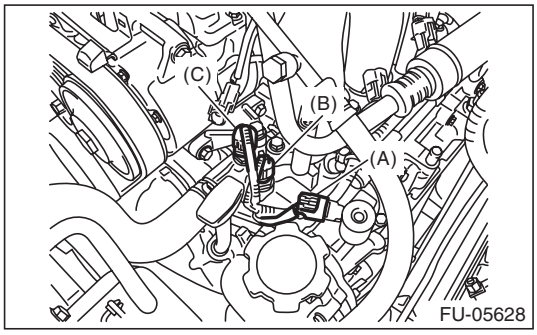

(A) Intake oil flow control solenoid valve LH
(B) Oil temperature sensor
(C) Engine coolant temperature sensor

11) Connect #2, #4, and #6 fuel injector connectors.
12) Install the fuel pipe protector LH.

Tightening torque:
19 N·m (1.9 kgf-m, 14.0 ft-lb)

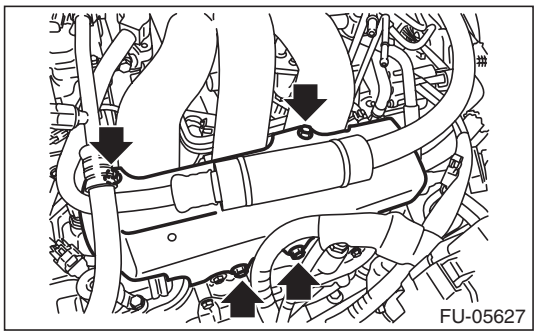

GETtheMANUALS.org

13) Connect the fuel delivery hose (A) and evaporation hose (B).

NOTE:
If fuel hoses or clamps are damaged, replace them with new parts.

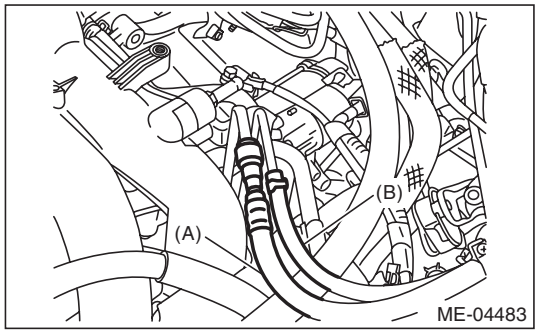

14) Install the throttle body to the intake manifold.

NOTE:
Use new O-rings.

Tightening torque:
8 N·m (0.8 kgf-m, 5.9 ft-lb)

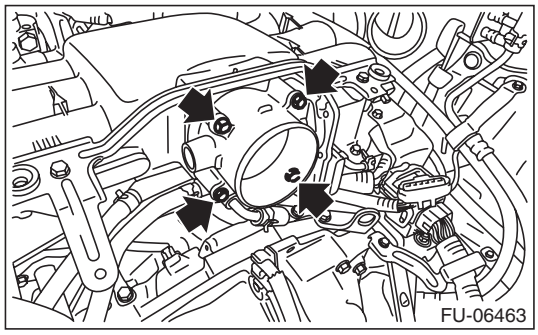

15) Connect the connector (A) to throttle body.
16) Connect the engine harness connector (B).

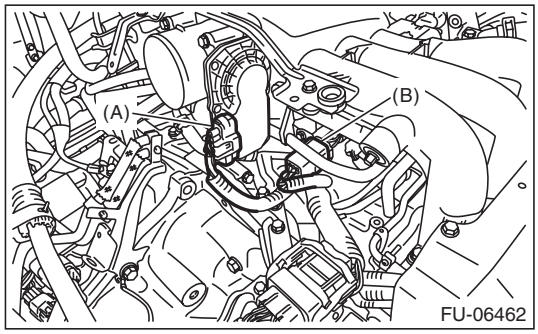

17) Connect the PCV hose.

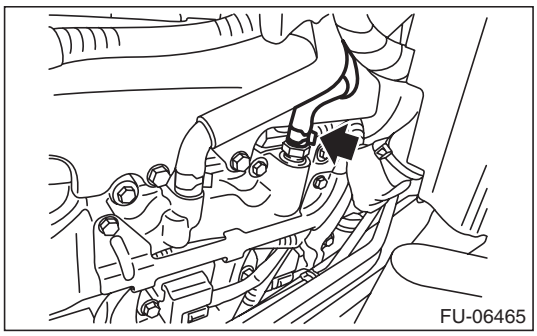

18) Connect the following connectors.
(1) Install the securing clips to the two locations on the fuel pipe protector LH.

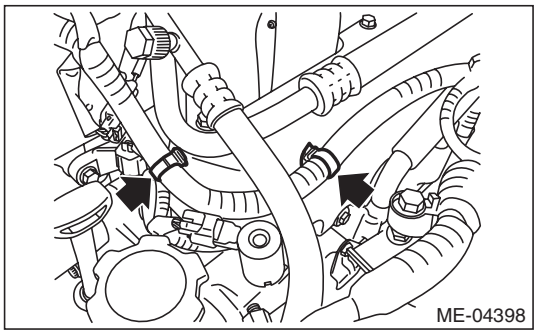

(2) Generator connector
(3) Generator terminal B

Tightening torque:
16 N·m (1.6 kgf-m, 11.8 ft-lb)

(4) Install the harness cover to the collector cover bracket.
(5) A/C compressor solenoid connector
(6) Flow sensor connector

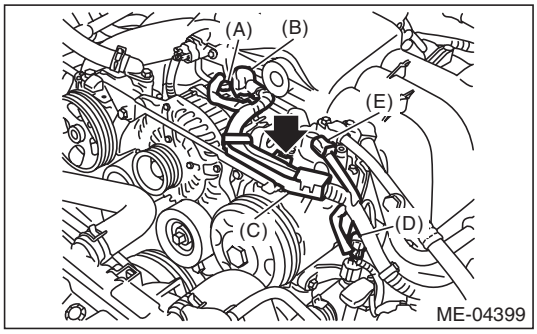

(A) Generator connector
(B) Terminal B
(C) Harness cover
(D) A/C compressor solenoid connector
(E) Flow sensor connector

19) Install the air cleaner case. <Ref. to IN(H6DO)-5, INSTALLATION, Air Cleaner Case.>

GETtheMANUALS.org

20) Install the air intake boot assembly.

Tightening torque:
Clamp (A)
3 N·m (0.3 kgf-m, 2.2 ft-lb)
Bolt (B)
6.5 N·m (0.7 kgf-m, 4.8 ft-lb)

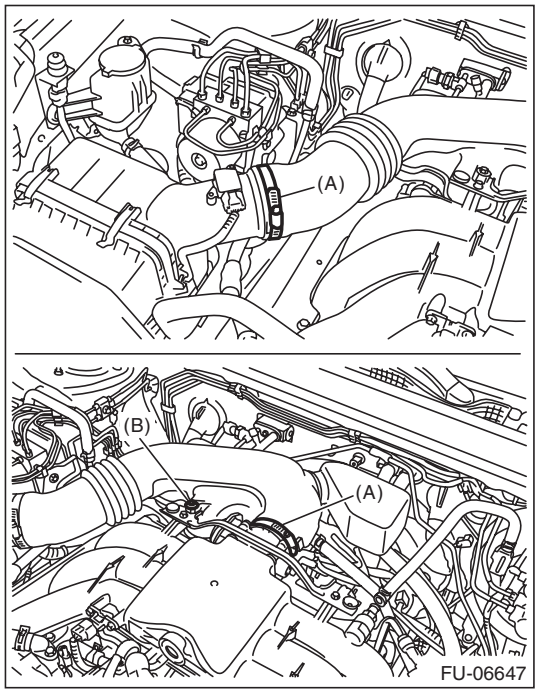

21) Connect the brake booster vacuum hose.

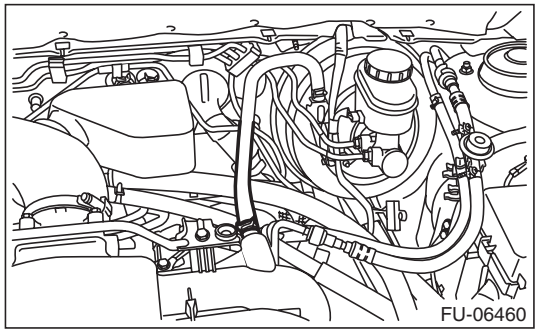

22) Install the battery and battery carrier. <Ref. to SC(H4SO)-28, INSTALLATION, Battery.>
23) Install the collector cover.

C: DISASSEMBLY

1) Remove the engine harness from intake manifold. <Ref. to FU(H6DO)-8, ENGINE HARNESS, COMPONENT, General Description.>

2) Remove the fuel injector pipe and the fuel hose.

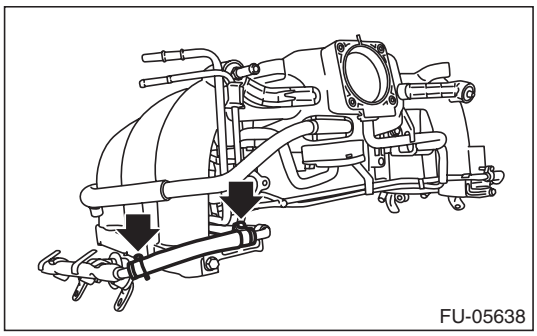

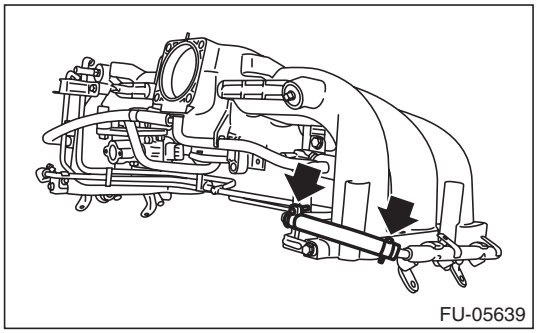

3) Remove the fuel pipe assembly.

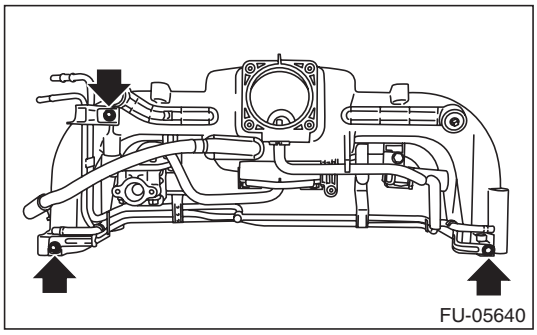

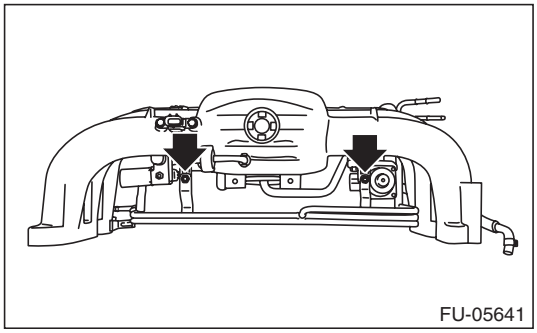

4) Remove the EGR valve. <Ref. to FU(H6DO)-42, REMOVAL, EGR Valve.>
5) Remove the manifold absolute pressure sensor. <Ref. to FU(H6DO)-39, REMOVAL, Manifold Absolute Pressure Sensor.>
6) Remove the purge control solenoid valve. <Ref. to EC(H6DO)-10, REMOVAL, Purge Control Solenoid Valve.>

GETtheMANUALS.org

D: ASSEMBLY

NOTE:
When assembling the nipple, apply liquid gasket.

Liquid gasket:
THREE BOND 1105 (Part No. 004403010) or equivalent

Tightening torque:
17 N·m (1.7 kgf-m, 12.5 ft-lb)

1) Install the purge control solenoid valve. <Ref. to EC(H6DO)-10, INSTALLATION, Purge Control Solenoid Valve.>
2) Install the manifold absolute pressure sensor. <Ref. to FU(H6DO)-39, INSTALLATION, Manifold Absolute Pressure Sensor.>
3) Install the EGR valve. <Ref. to FU(H6DO)-43, INSTALLATION, EGR Valve.>
4) Install the fuel pipe assembly.

Tightening torque:
6.4 N·m (0.7 kgf-m, 4.7 ft-lb)

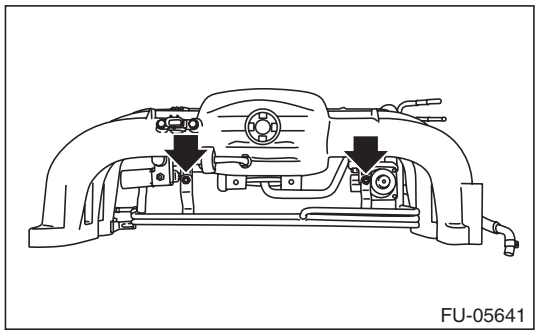
FU-05641

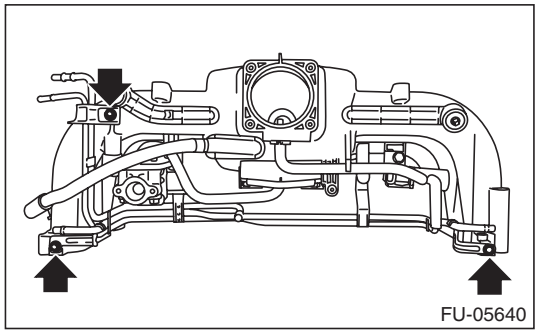
FU-05640

5) Install the fuel injector pipe and the fuel hose.

Tightening torque:
1.25 N·m (0.1 kgf-m, 0.9 ft-lb)

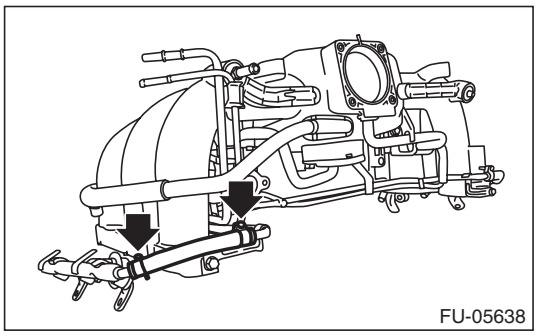
FU-05638

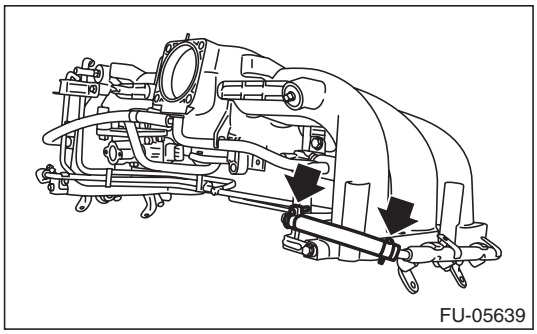
FU-05639

6) Install the engine harness to the intake manifold. <Ref. to FU(H6DO)-8, ENGINE HARNESS, COMPONENT, General Description.>

E: INSPECTION

1) Check that the intake manifold and fuel pipe have no deformation, cracks and other damages.
2) Check that the hose has no cracks, damage or loose part.

GETtheMANUALS.org

4. Engine Coolant Temperature Sensor

A: REMOVAL

1) Remove the collector cover.

NOTE:
Follow these procedures for removal of the collector cover.
(1) Lift up the rear side holding two positions (A).
(2) Lift up the front side holding two positions (B) while moving it in the forward direction of the vehicle.

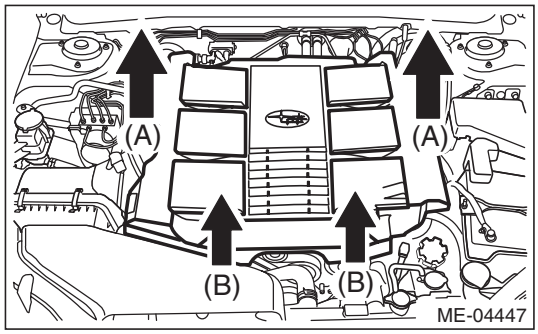

2) Disconnect the ground cable from battery.
3) Drain engine coolant. <Ref. to CO(H6DO)-12, DRAINING OF ENGINE COOLANT, REPLACEMENT, Engine Coolant.>
4) Disconnect the connectors from the engine coolant temperature sensor.

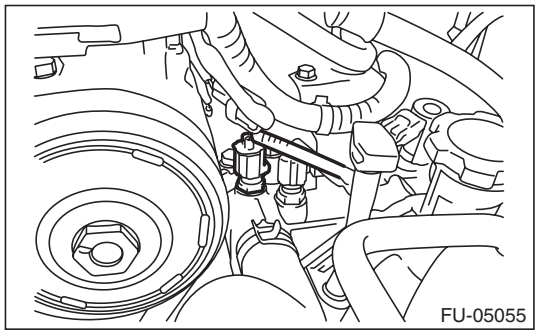

5) Remove the engine coolant temperature sensor.

B: INSTALLATION

Install in the reverse order of removal.

Tightening torque:
22 N·m (2.2 kgf-m, 16.2 ft-lb)

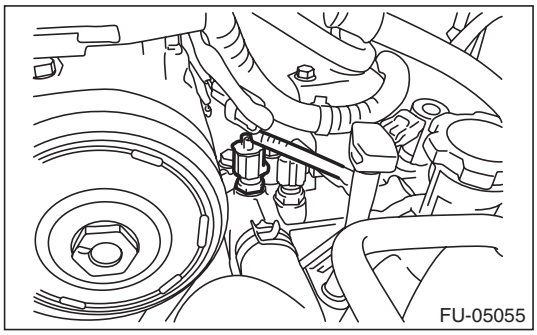

C: INSPECTION

1) Check that the engine coolant temperature sensor has no deformation, cracks or other damages.
2) Immerse the engine coolant temperature sensor and a thermometer in water.

CAUTION:
Take care not to allow water to get into the engine coolant temperature sensor connector. Completely remove any water inside.

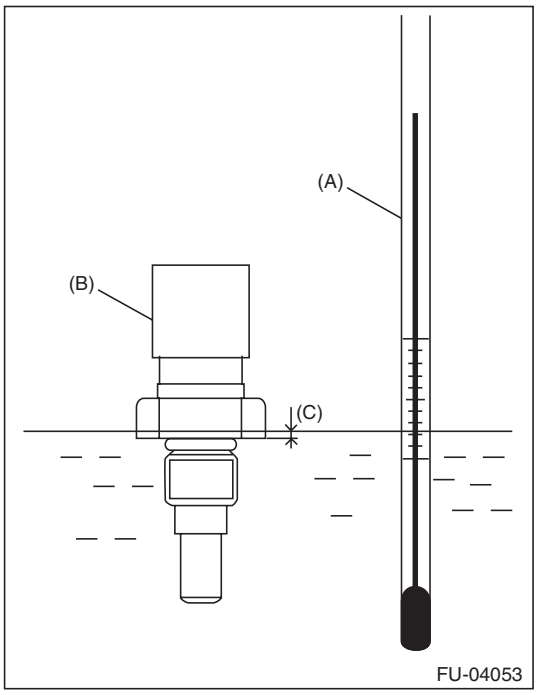

(A) Thermometer
(B) Engine coolant temperature sensor
(C) Hexagonal part height: To approx. $^{1}/_{3}$

GETtheMANUALS.org

3) Raise water temperature gradually, measure the resistance between the engine coolant temperature sensor terminals when the temperature is 20°C (68°F) and 80°C (176°F).

NOTE:
Agitate the water for even temperature distribution.

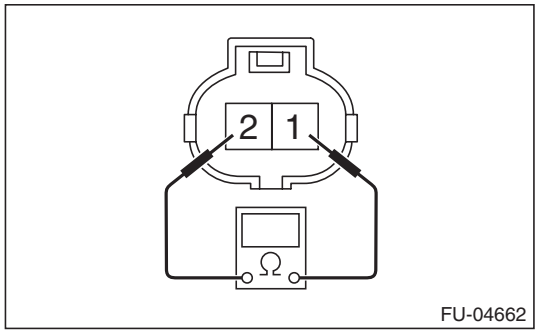

Water temperature	Terminal No.	Standard
20°C (68°F)	1 and 2	2.45±0.2 kΩ
80°C (176°F)		0.318±0.013 kΩ

GETtheMANUALS.org

5. Crankshaft Position Sensor

A: REMOVAL

1) Remove the collector cover.

NOTE:
Follow the steps below when removing the collector cover.
(1) Pull up the two points at the rear (A).
(2) Pull up the two points at the front (B) while moving them forward.

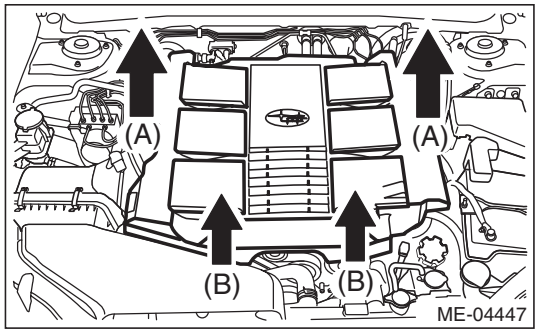

2) Disconnect the ground cable from battery.
3) Loosen the clamp (A) which connects the air intake boot assembly.
4) Loosen the bolt (B) which secures the air intake boot assembly to the collector cover bracket.

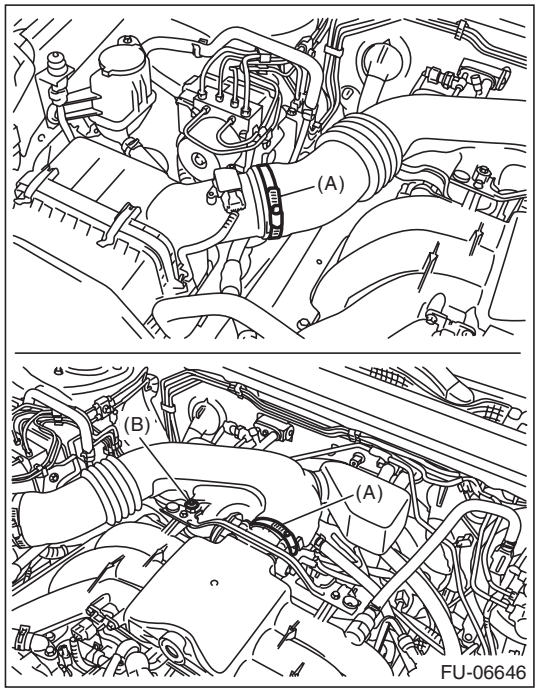

5) Remove the air intake boot assembly, and move it to the left side wheel apron.

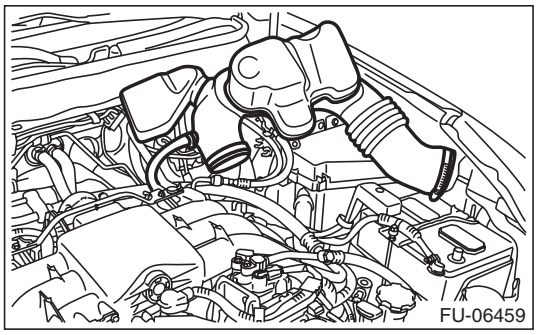

6) Remove the throttle body from the intake manifold.

NOTE:
Do not disconnect the inlet and outlet hoses of engine coolant.

7) Remove the service hole plug.

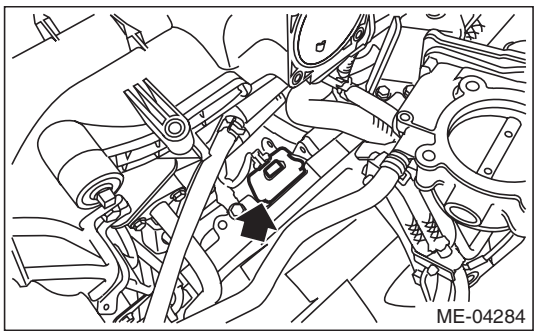

8) Remove the crankshaft position sensor.

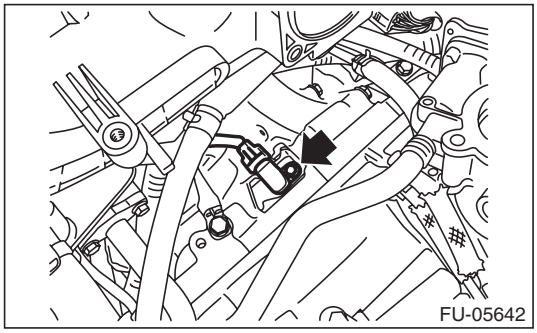

9) Disconnect the connector from the crankshaft position sensor.

GETtheMANUALS.org

B: INSTALLATION

Install in the reverse order of removal.

Tightening torque:
6.4 N·m (0.7 kgf-m, 4.7 ft-lb)

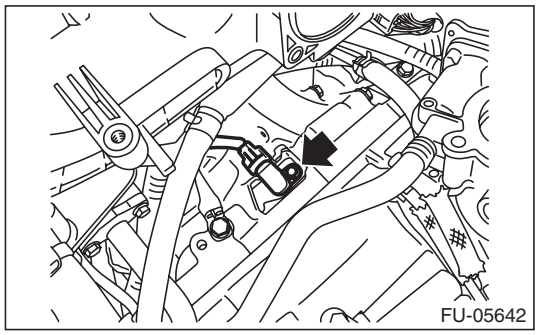

Tightening torque:
Clamp (A)
3 N·m (0.3 kgf-m, 2.2 ft-lb)
Bolt (B)
6.5 N·m (0.7 kgf-m, 4.8 ft-lb)

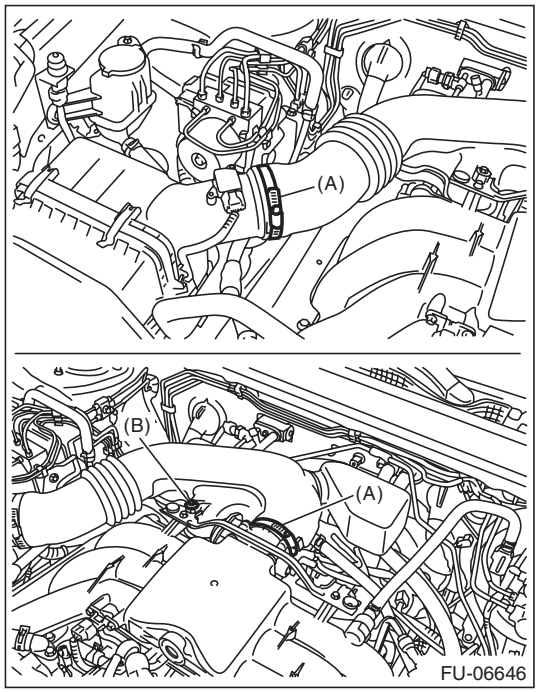

C: INSPECTION

1. CRANKSHAFT POSITION SENSOR (METHOD WITH CIRCUIT TESTER)

Measure the resistance between crankshaft position sensor terminals.

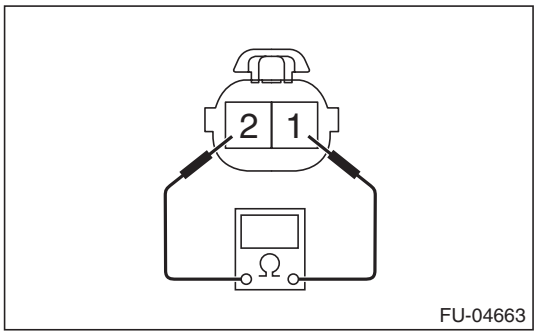

Terminal No.	Standard
1 and 2	1.86±0.186 kΩ

2. CRANKSHAFT POSITION SENSOR (METHOD WITH OSCILLOSCOPE)

1) Prepare an oscilloscope.
2) Remove the glove box lid assembly. <Ref. to EI-66, REMOVAL, Glove Box.>
3) Connect the probe to ECM connector.

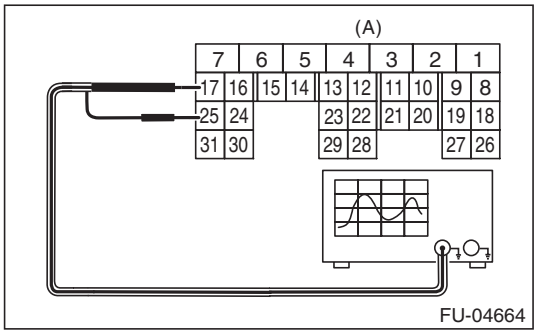

(A) To ECM connector

Terminal No.	Probe
17	+
25	–

4) Start the engine and let it idle.

GETtheMANUALS.org

5) Check that the pattern is the same as the waveform and voltage shown below.

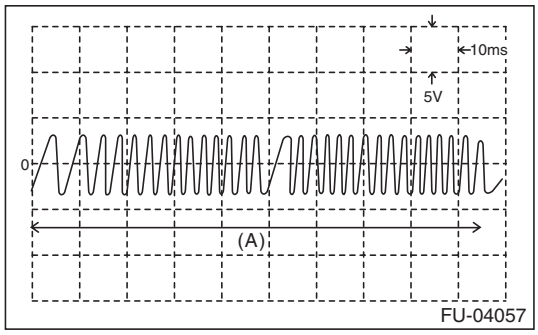

(A) One crankshaft rotation

6) After inspection, install the related parts in the reverse order of removal.

3. OTHER INSPECTIONS

Check that the crankshaft position sensor has no deformation, cracks or other damages.

GETtheMANUALS.org

6. Camshaft Position Sensor

A: REMOVAL

1. INTAKE SIDE

1) Remove the collector cover.

NOTE:
Follow the steps below when removing the collector cover.
(1) Pull up the two points at the rear (A).
(2) Pull up the two points at the front (B) while moving them forward.

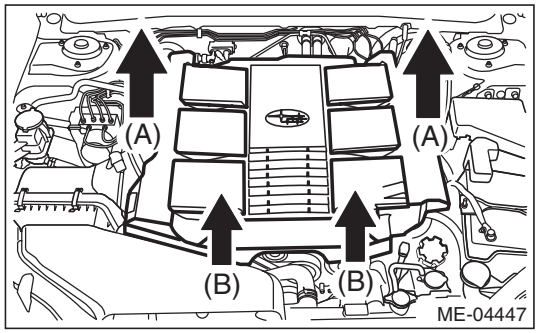

2) Release the fuel pressure. <Ref. to FU(H6DO)-59, RELEASING OF FUEL PRESSURE, PROCEDURE, Fuel.>
3) Remove the battery and battery carrier. <Ref. to SC(H4SO)-28, REMOVAL, Battery.>
4) Open the fuel filler lid and remove the fuel filler cap.
5) Remove the securing clips from the two locations on the fuel pipe protector LH.

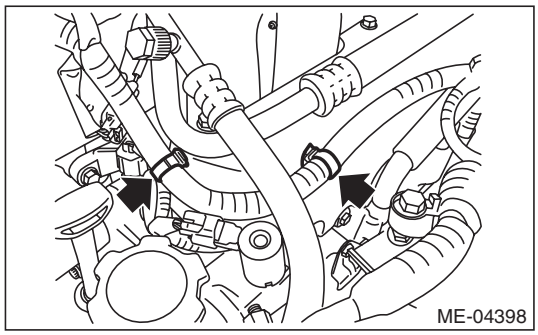

6) Disconnect the PCV hose.

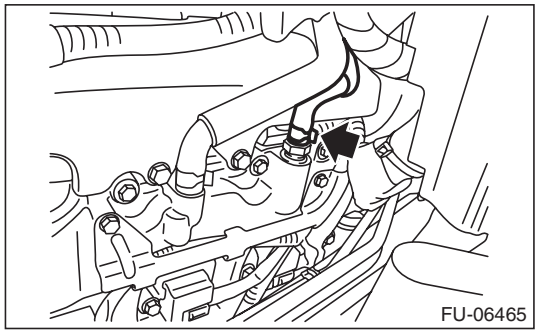

7) Remove the fuel pipe protector LH.

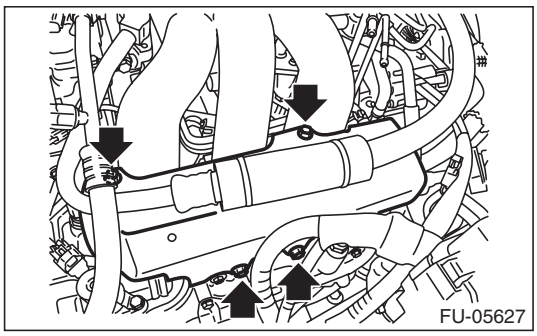

8) Disconnect the connectors of the oil temperature sensor, engine coolant temperature sensor and intake oil flow control solenoid valve LH.

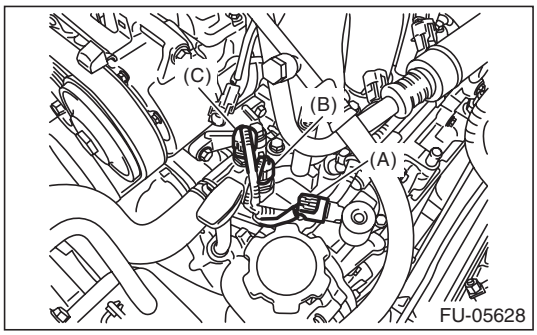

(A) Intake oil flow control solenoid valve LH
(B) Oil temperature sensor
(C) Engine coolant temperature sensor

9) Remove the bolts which hold fuel injector pipe LH to cylinder head.

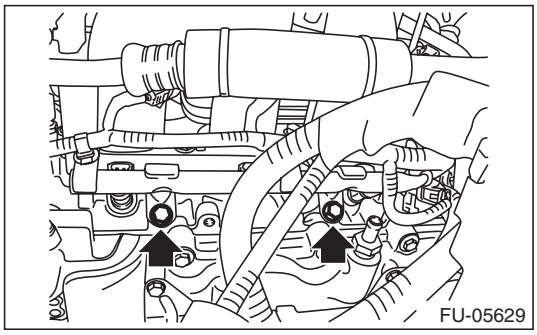

10) Slightly raise the fuel injector pipe LH.
11) Disconnect the connector from intake camshaft position sensor LH.

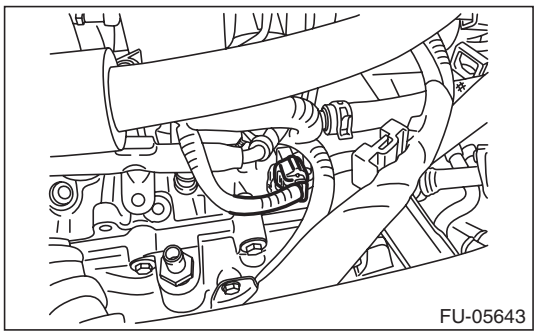

GETtheMANUALS.org

12) Remove the intake camshaft position sensor LH.

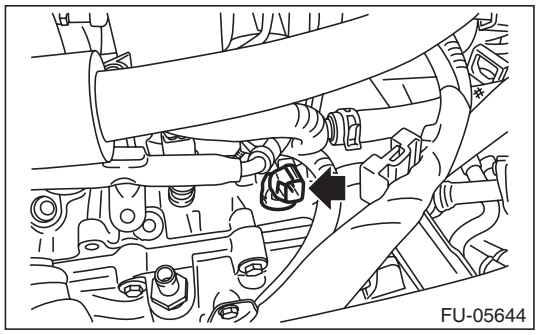

13) Remove the intake camshaft position sensor RH in the same procedure as LH side.

2. EXHAUST SIDE

1) Disconnect the ground cable from battery.
2) Lift up the vehicle.
3) Remove the under cover. <Ref. to EI-35, REMOVAL, Front Under Cover.>
4) Disconnect the connector from exhaust camshaft position sensor LH.

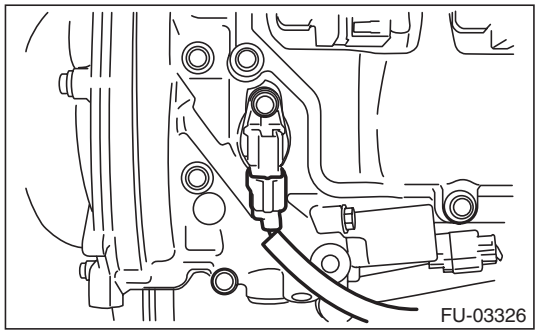

5) Remove the exhaust camshaft position sensor LH.

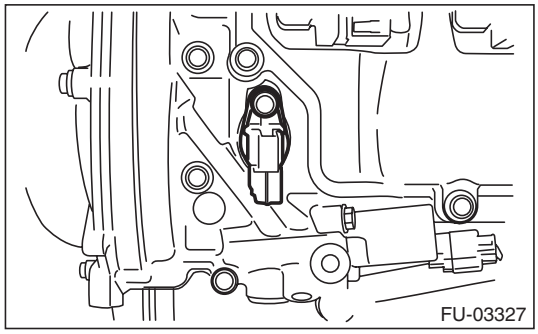

6) Remove the exhaust camshaft position sensor RH in the same procedure as LH side.

B: INSTALLATION

1. INTAKE SIDE

Install in the reverse order of removal.

Tightening torque:
Intake camshaft position sensor
6.4 N·m (0.7 kgf-m, 4.7 ft-lb)
Fuel pipe protector
19 N·m (1.9 kgf-m, 14.0 ft-lb)

2. EXHAUST SIDE

Tightening torque:
Exhaust camshaft position sensor
6.4 N·m (0.7 kgf-m, 4.7 ft-lb)

C: INSPECTION

1. CAMSHAFT POSITION SENSOR (METHOD WITH OSCILLOSCOPE)

1) Prepare an oscilloscope.
2) Remove the glove box lid assembly. <Ref. to EI-66, REMOVAL, Glove Box.>
3) Connect the probe to ECM connector.
- Intake camshaft position sensor

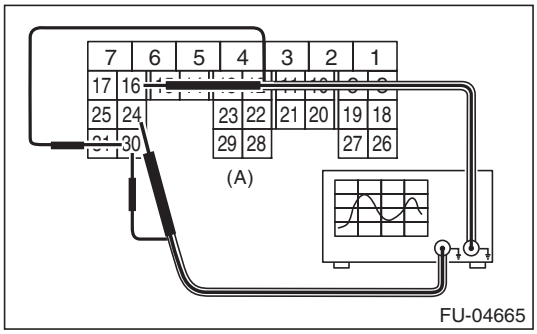

(A) To ECM connector

Camshaft position sensor	Terminal No.	Probe
RH	24	+
LH	16	+
RH and LH	30	–

GETtheMANUALS.org

- Exhaust camshaft position sensor

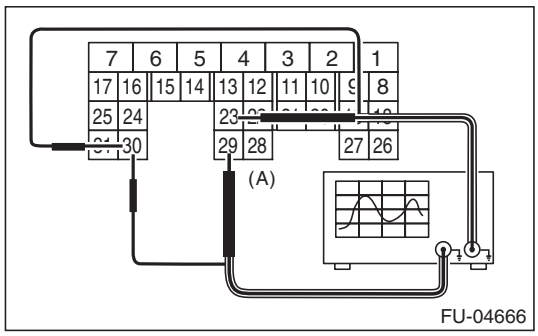

(A) To ECM connector

Camshaft position sensor	Terminal No.	Probe
RH	23	+
LH	29	+
RH and LH	30	–

4) Start the engine and let it idle.
5) Check that the pattern is the same as the waveform and voltage shown below.

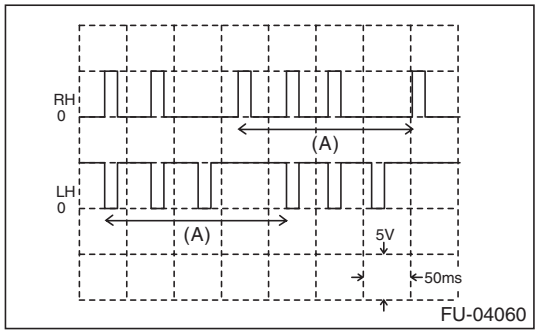

(A) One camshaft rotation

6) After inspection, install the related parts in the reverse order of removal.

2. OTHER INSPECTIONS

Check that the camshaft position sensor has no deformation, cracks or other damages.

GETtheMANUALS.org

7. Knock Sensor

A: REMOVAL

1) Remove the collector cover.

NOTE:
Follow these procedures for removal of the collector cover.
(1) Lift up the rear side holding two positions (A).
(2) Lift up the front side holding two positions (B) while moving it in the forward direction of the vehicle.

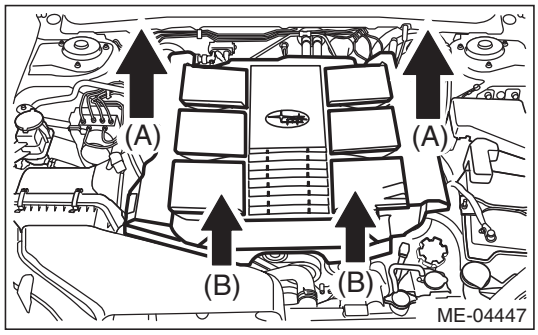

2) Disconnect the ground cable from battery.
3) Remove the intake manifold. <Ref. to FU(H6DO)-21, REMOVAL, Intake Manifold.>
4) Disconnect the knock sensor connector.
5) Remove the knock sensor from cylinder block.

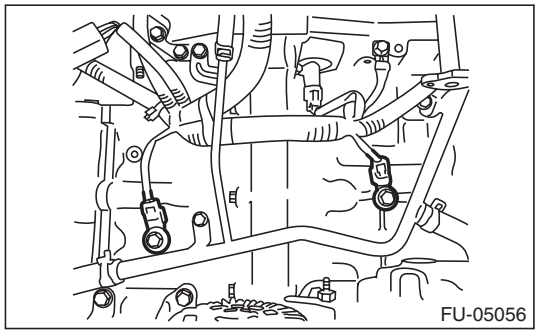

B: INSTALLATION

1) Install the knock sensor to the cylinder block.

Tightening torque:
25 N·m (2.5 kgf-m, 18.4 ft-lb)

NOTE:
For the knock sensor installation angle, refer to the figure below.

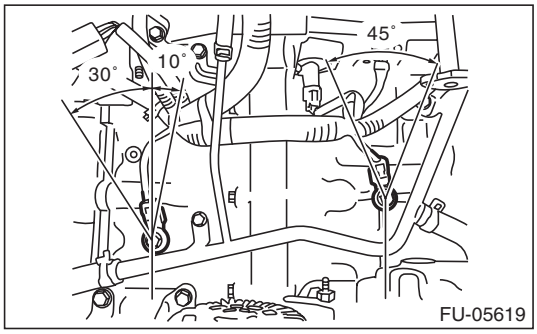

2) Connect the knock sensor connector.
3) Install the intake manifold. <Ref. to FU(H6DO)-24, INSTALLATION, Intake Manifold.>
4) Connect the battery ground terminal.
5) Install the collector cover.

C: INSPECTION

1) Check that the knock sensor has no deformation, cracks or other damages.
2) Measure the resistance between knock sensor terminals.

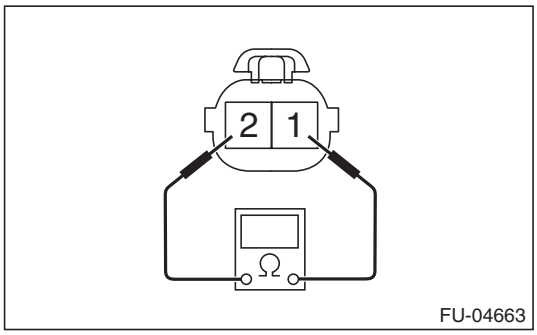

Terminal No.	Standard
1 and 2	560±28 kΩ

GETtheMANUALS.org

8. Throttle Position Sensor

A: SPECIFICATION

Throttle body is a non-disassembled part, so do not remove the throttle position sensor from throttle body.
Refer to “Throttle Body” for removal and installation procedure. <Ref. to FU(H6DO)-19, REMOVAL, Throttle Body.> <Ref. to FU(H6DO)-20, INSTALLATION, Throttle Body.>

GETtheMANUALS.org

9. Manifold Absolute Pressure Sensor

A: REMOVAL

1) Remove the collector cover.

NOTE:
Follow these procedures for removal of the collector cover.

(1) Lift up the rear side holding two positions (A).
(2) Lift up the front side holding two positions (B) while moving it in the forward direction of the vehicle.

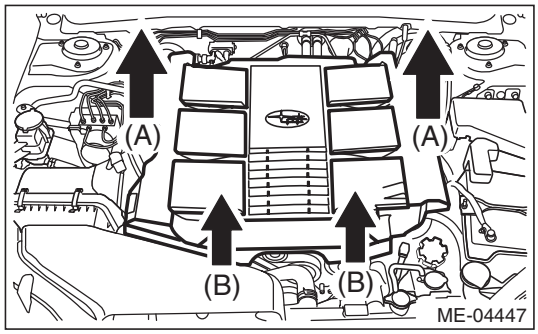

2) Disconnect the ground cable from battery.
3) Disconnect the manifold pressure sensor connector.

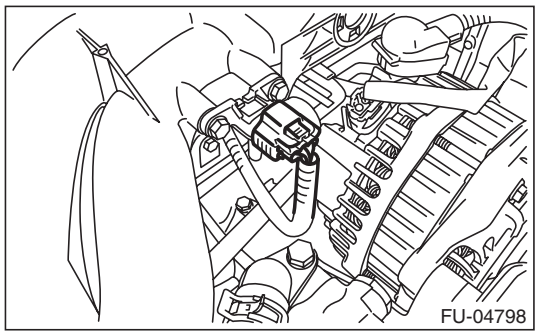

4) Remove the manifold pressure sensor and the filter and hose from intake manifold.

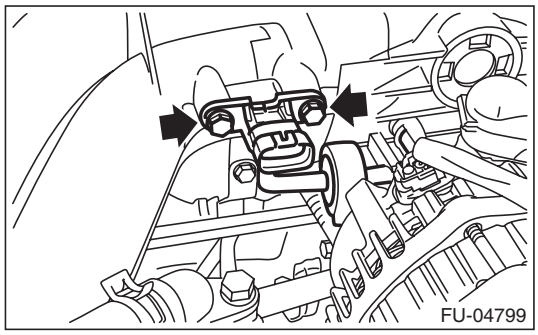

B: INSTALLATION

Install in the reverse order of removal.

Tightening torque:
6.4 N·m (0.7 kgf-m, 4.7 ft-lb)

C: INSPECTION

1) Check that the manifold absolute pressure sensor has no deformation, cracks or other damages.
2) Connect dry-cell battery positive terminal to terminal No. 3 and dry-cell battery ground terminal to terminal No. 2, circuit tester ground terminal to terminal No. 2 and the circuit tester positive terminal to terminal No. 1.

NOTE:
- Use new dry-cell batteries.
- Using circuit tester, check the voltage of a single dry-cell battery is 1.6 V or more. And also check the voltage of three batteries in series is between 4.8 V and 5.2 V.

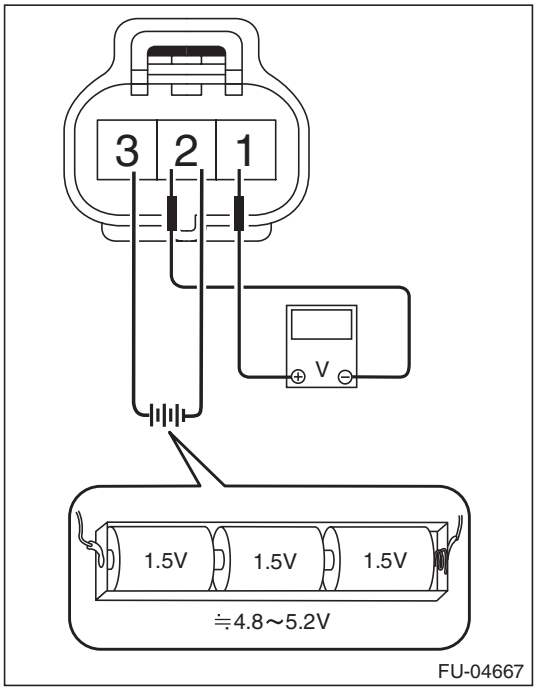

3) Connect the Mighty Vac to the pressure port (A) of manifold absolute pressure sensor.

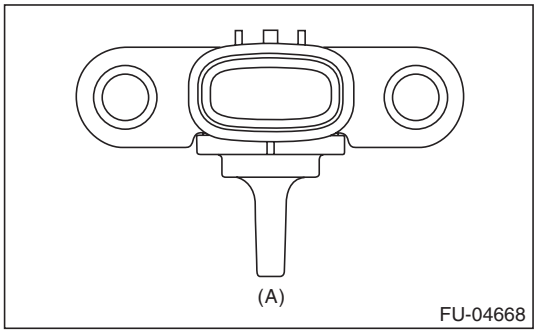

GETtheMANUALS.org

4) Check the voltage when generating vacuum and positive pressure using Mighty Vac.

CAUTION:
Do not apply vacuum of less than –88 kPa (–0.9 kgf/cm^2, –12.8 psi). Doing so may damage the manifold absolute pressure sensor.

NOTE:
When vacuum occurs at the pressure port of manifold absolute pressure sensor, the voltage will drop from the value as in step 3). When positive pressure occurs, on the other hand, the voltage will rise.

Pressure	Terminal No.	Standard
–88 kPa (–0.9 kgf/cm^2, –12.8 psi)	2 (+) and 1 (–)	Approx. 1 V (when 25°C (77°F))
–35 kPa (–0.4 kgf/cm^2, –5.1 psi)		Approx. 2.6 V (when 25°C (77°F))
19 kPa (–0.2 kgf/cm^2, 2.8 psi)		Approx. 4.2 V (when 25°C (77°F))

GETtheMANUALS.org

10. Mass Air Flow and Intake Air Temperature Sensor

A: REMOVAL

1) Disconnect the ground cable from battery.
2) Disconnect the connector (A) from air flow and intake air temperature sensor.

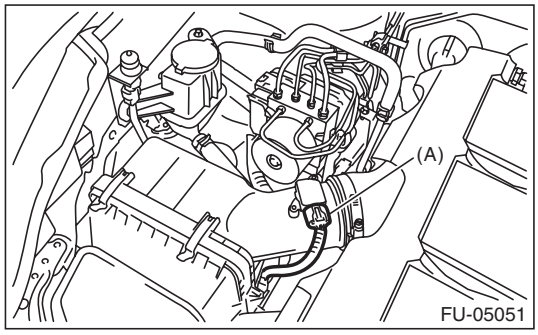

3) Remove the mass air flow and intake air temperature sensor.

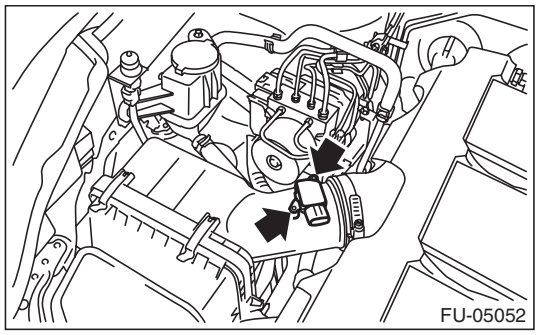

B: INSTALLATION

Install in the reverse order of removal.

Tightening torque:
1 N·m (0.1 kgf-m, 0.7 ft-lb)

C: INSPECTION

1. CHECK MASS AIR FLOW SENSOR UNIT

1) Connect battery positive terminal to terminal No. 3 and battery ground terminal to terminal No. 4, circuit tester positive terminal to terminal No. 5 and the circuit tester negative terminal to terminal No. 4.

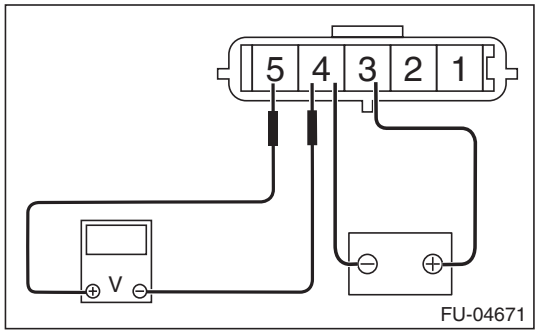

2) Check that the voltage changes when air is blown to the mass air flow sensor unit from arrow direction.

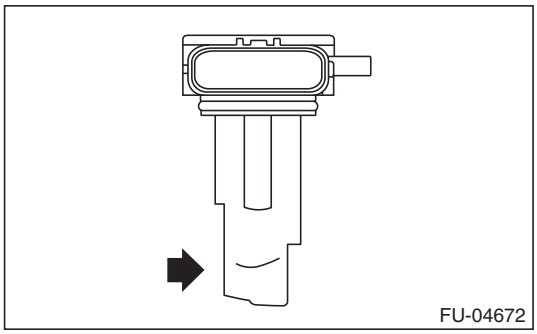

2. CHECK INTAKE AIR TEMPERATURE SENSOR UNIT

Measure the resistance between intake air temperature sensor terminals.

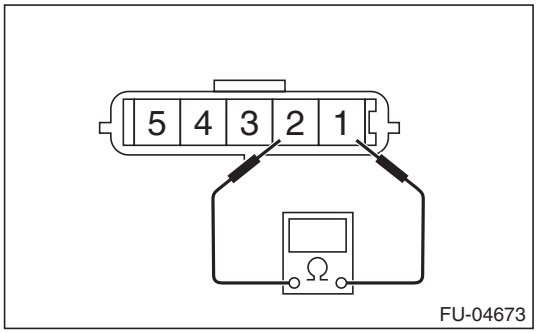

Temperature	Terminal No.	Standard
–20°C (–4°F)	1 and 2	16.0±2.4 kΩ
20°C (68°F)		2.45±0.24 kΩ
60°C (140°F)		0.58±0.087 kΩ

3. OTHER INSPECTIONS

1) Check that the mass air flow and intake air temperature sensor has no deformation, cracks or other damages.
2) Check that the mass air flow and intake air temperature sensor has no dirt.

GETtheMANUALS.org

11.EGR Valve

A: REMOVAL

1) Remove the collector cover.

NOTE:
Follow the steps below when removing the collector cover.
(1) Pull up the two points at the rear (A).
(2) Pull up the two points at the front (B) while moving them forward.

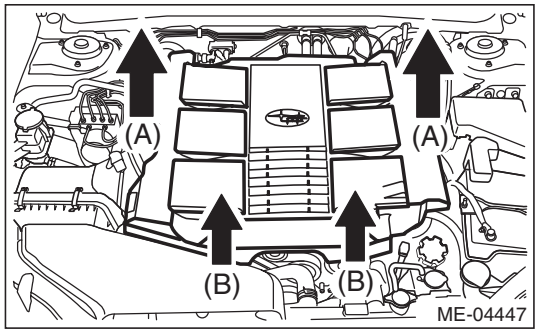

2) Disconnect the ground cable from battery.
3) Loosen the clamp (A) which connects the air intake boot assembly.
4) Loosen the bolt (B) which secures the air intake boot assembly to the collector cover bracket.

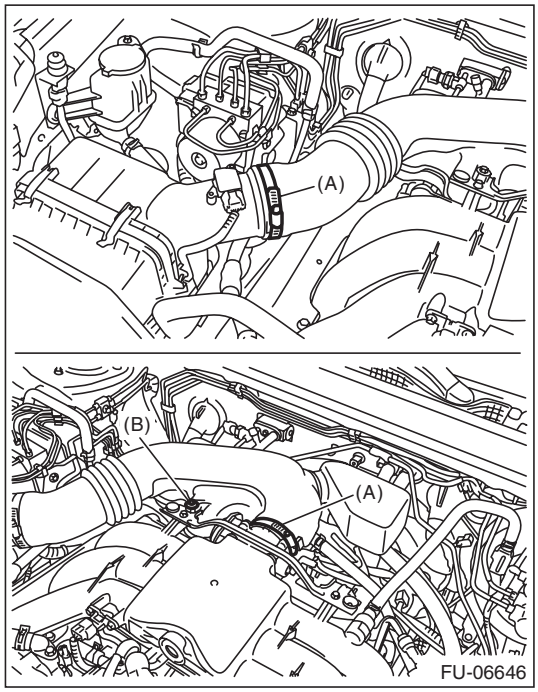

5) Remove the air intake boot assembly, and move it to the left side wheel apron.

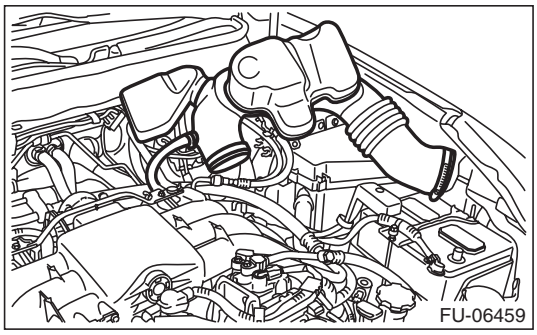

6) Remove the starter. <Ref. to SC(H4SO)-9, REMOVAL, Starter.>
7) Remove the EGR pipe from EGR valve and cylinder head.
8) Remove the EGR valve from intake manifold.

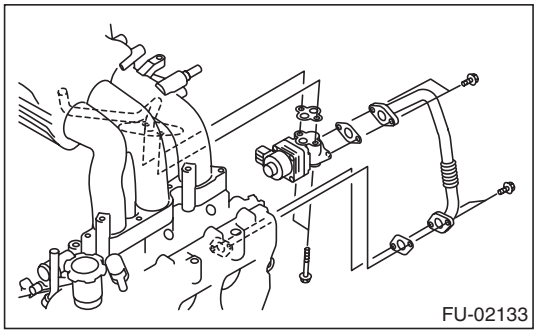

9) Disconnect the connector from EGR valve.

GETtheMANUALS.org

B: INSTALLATION

Install in the reverse order of removal.

NOTE:
Use a new gasket.

Tightening torque:
EGR valve
19 N·m (1.9 kgf-m, 14.0 ft-lb)
EGR pipe
6.4 N·m (0.7 kgf-m, 4.7 ft-lb)

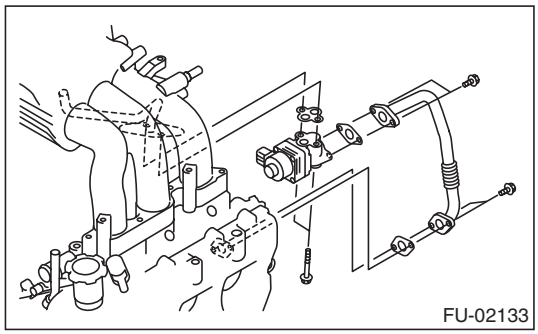

Tightening torque:
Clamp (A)
3 N·m (0.3 kgf-m, 2.2 ft-lb)
Bolt (B)
6.5 N·m (0.7 kgf-m, 4.8 ft-lb)

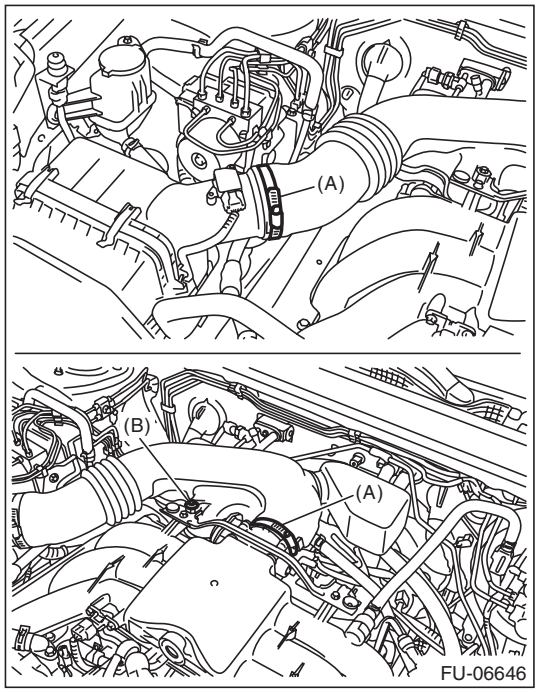

C: INSPECTION

1) Check that the EGR valve has no deformation, cracks or other damages.
2) Measure the resistance between EGR valve terminals.

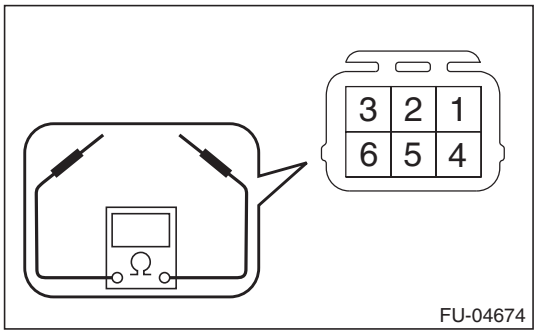

Terminal No.	Standard
2 and 1	22±2 Ω
2 and 3	22±2 Ω
5 and 4	22±2 Ω
5 and 6	22±2 Ω

GETtheMANUALS.org

12. Fuel Injector

A: REMOVAL

1. RH SIDE

1) Remove the collector cover.

NOTE:
Follow the steps below when removing the collector cover.
(1) Pull up the two points at the rear (A).
(2) Pull up the two points at the front (B) while moving them forward.

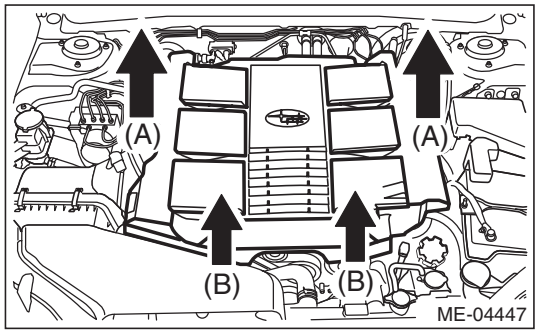

2) Release the fuel pressure. <Ref. to FU(H6DO)-59, RELEASING OF FUEL PRESSURE, PROCEDURE, Fuel.>
3) Disconnect the ground cable from battery.
4) Open the fuel filler lid and remove the fuel filler cap.
5) Loosen the clamp (A) which connects the air intake boot assembly.
6) Loosen the bolt (B) which secures the air intake boot assembly to the collector cover bracket.

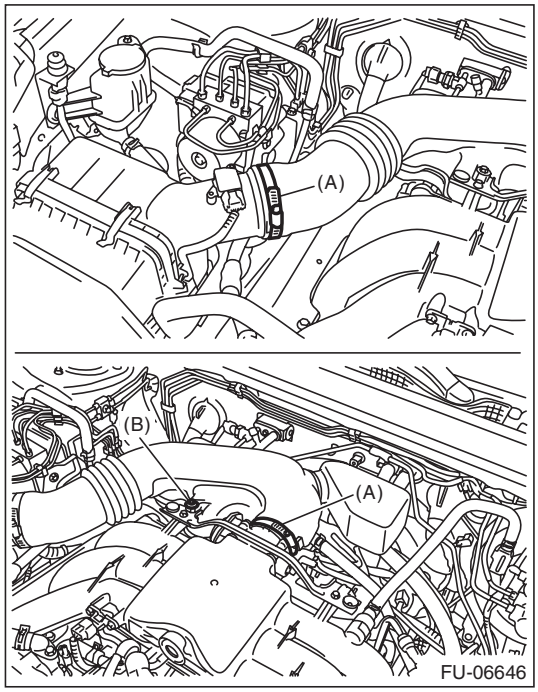

7) Remove the air intake boot assembly, and move it to the left side wheel apron.

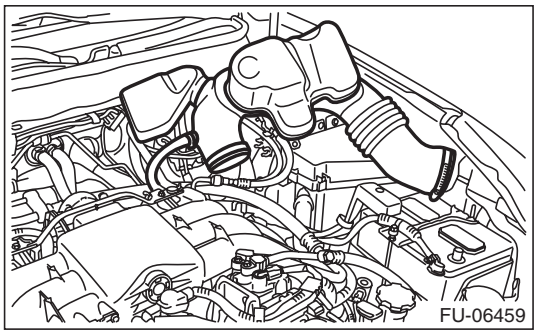

8) Remove the air cleaner case. <Ref. to IN(H6DO)-5, REMOVAL, Air Cleaner Case.>
9) Remove the fuel pipe protector RH.

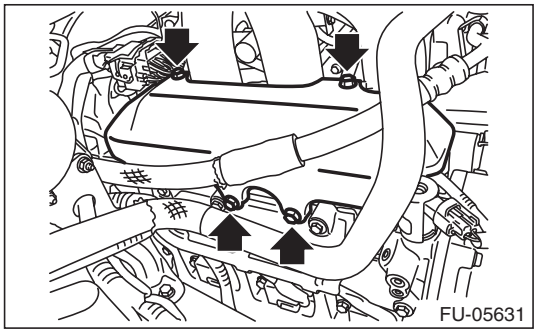

10) Disconnect the connector from fuel injector.
11) Remove the bolt which holds fuel injector pipe onto cylinder head.

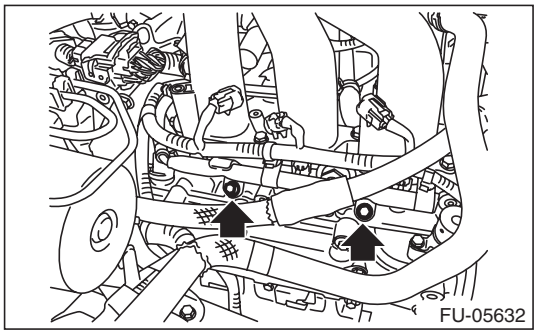

12) Remove the fuel injector while lifting up the fuel injector pipe.

GETtheMANUALS.org

2. LH SIDE

1) Remove the collector cover.

NOTE:
Follow the steps below when removing the collector cover.
(1) Pull up the two points at the rear (A).
(2) Pull up the two points at the front (B) while moving them forward.

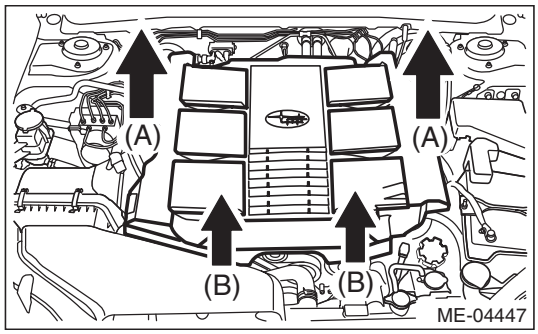

2) Release the fuel pressure. <Ref. to FU(H6DO)-59, RELEASING OF FUEL PRESSURE, PROCEDURE, Fuel.>
3) Remove the battery and battery carrier. <Ref. to SC(H4SO)-28, REMOVAL, Battery.>
4) Open the fuel filler lid and remove the fuel filler cap.
5) Remove the securing clips from the two locations on the fuel pipe protector LH.

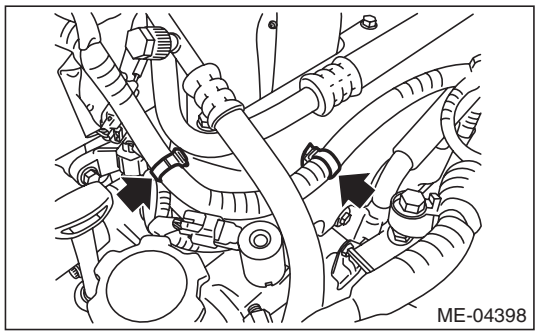

6) Disconnect the PCV hose.

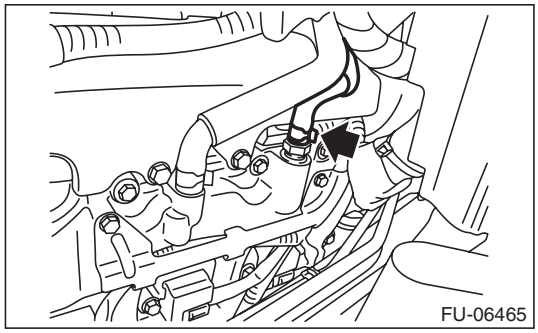

7) Remove the fuel pipe protector LH.

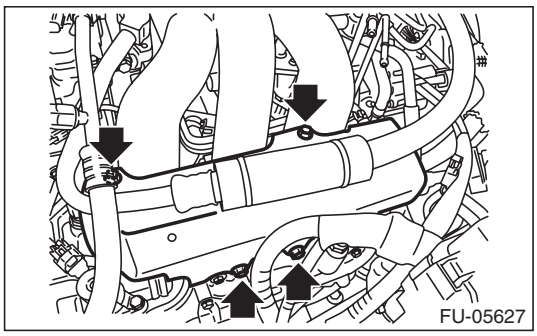

8) Disconnect the connector from fuel injector.
9) Remove the bolt which holds fuel injector pipe onto cylinder head.

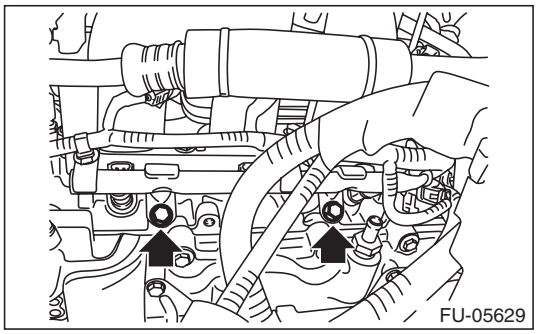

10) Remove the fuel injector while lifting up the fuel injector pipe.

B: INSTALLATION

1. RH SIDE

Install in the reverse order of removal.

NOTE:
Use new O-rings, injection rubbers, and seal rings.

Tightening torque:
19 N·m (1.9 kgf-m, 14.0 ft-lb)

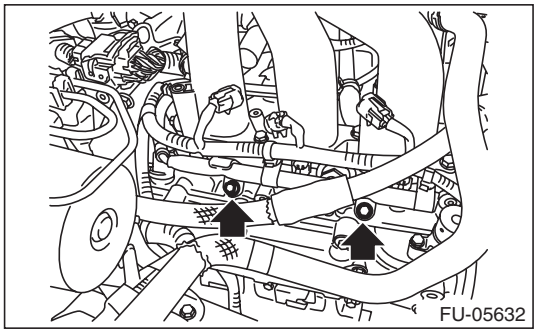

GETtheMANUALS.org

Tightening torque:
19 N·m (1.9 kgf-m, 14.0 ft-lb)

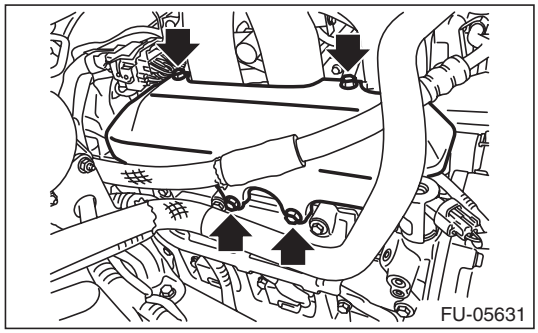

Tightening torque:
Clamp (A)
3 N·m (0.3 kgf-m, 2.2 ft-lb)
Bolt (B)
6.5 N·m (0.7 kgf-m, 4.8 ft-lb)

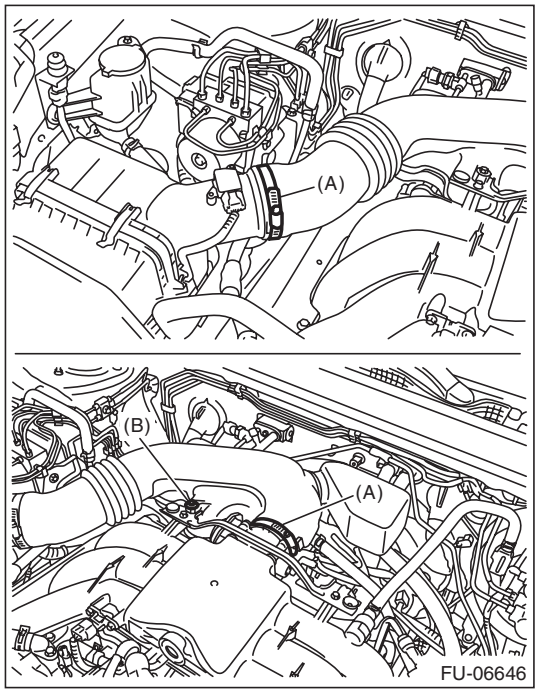

2. LH SIDE

Install in the reverse order of removal.

NOTE:
Use new O-rings, injection rubbers, and seal rings.

Tightening torque:
19 N·m (1.9 kgf-m, 14.0 ft-lb)

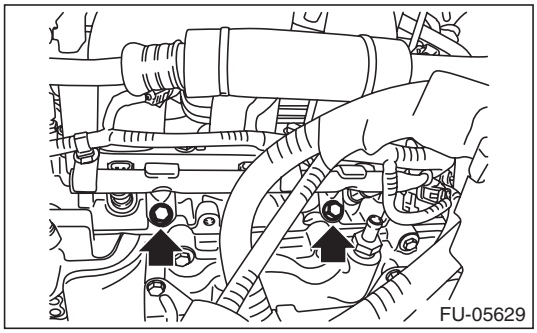

Tightening torque:
19 N·m (1.9 kgf-m, 14.0 ft-lb)

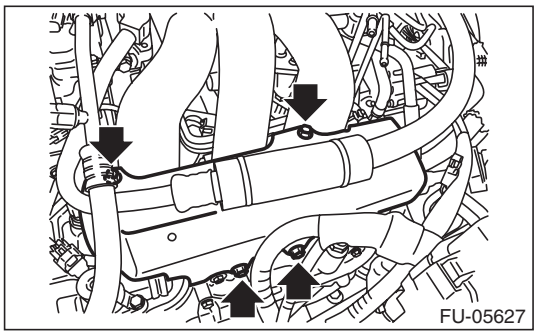

C: INSPECTION

1) Check that the fuel injector has no deformation, cracks or other damages.
2) Measure the resistance between fuel injector terminals.

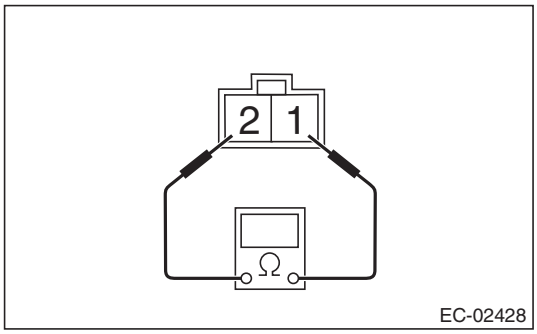

Terminal No.	Standard
1 and 2	Approx. 12.0 Ω (when 20°C (68°F))

GETtheMANUALS.org

13. Oil Flow Control Solenoid Valve

A: REMOVAL

1. INTAKE SIDE

1) Remove the collector cover.

NOTE:
Follow the steps below when removing the collector cover.
(1) Pull up the two points at the rear (A).
(2) Pull up the two points at the front (B) while moving them forward.

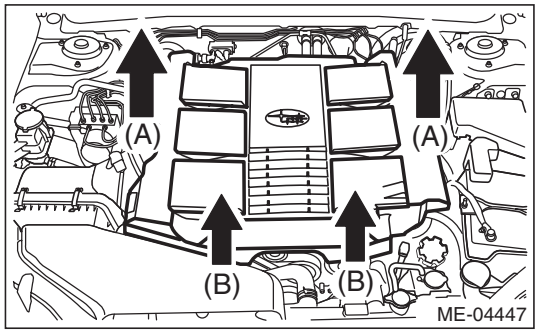

2) Disconnect the ground cable from battery.
3) Disconnect the connector from the intake oil flow control solenoid valve RH.

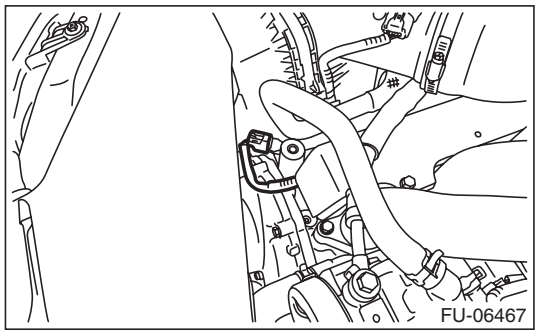

4) Remove the intake oil flow control solenoid valve RH.

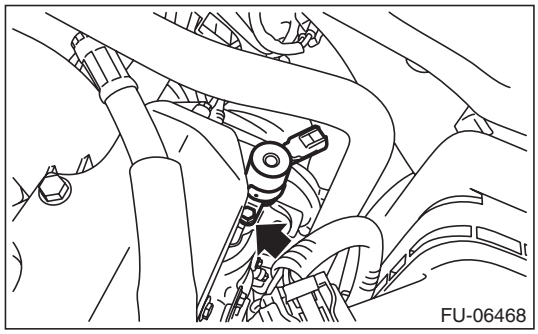

5) Remove the intake oil flow control solenoid valve LH in the same procedure as the intake oil flow control solenoid valve RH.

2. EXHAUST SIDE

1) Disconnect the ground cable from battery.
2) Lift up the vehicle.
3) Remove the under cover. <Ref. to EI-35, REMOVAL, Front Under Cover.>
4) Disconnect the connector from the exhaust oil flow control solenoid valve LH.

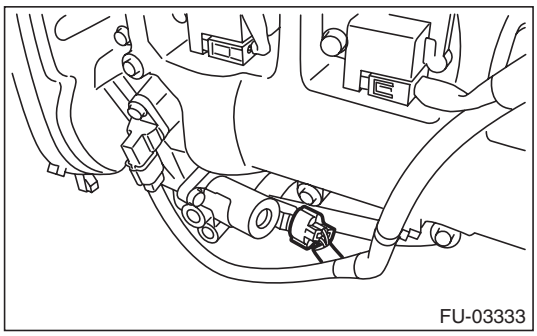

5) Remove the exhaust oil flow control solenoid valve LH.

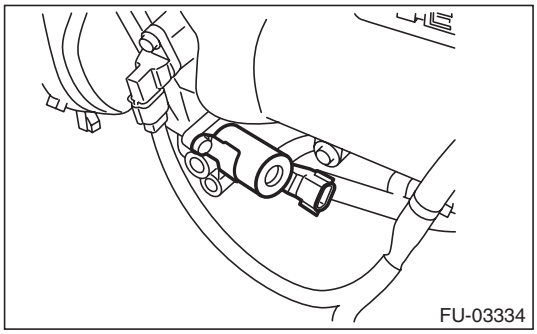

6) Remove the exhaust oil flow control solenoid valve RH in the same procedure as the exhaust oil flow control solenoid valve LH.

B: INSTALLATION

1. INTAKE SIDE

Install in the reverse order of removal.

Tightening torque:
Intake oil flow control solenoid valve
6.4 N·m (0.7 kgf-m, 4.7 ft-lb)

2. EXHAUST SIDE

Tightening torque:
Exhaust oil flow control solenoid valve
6.4 N·m (0.7 kgf-m, 4.7 ft-lb)

GETtheMANUALS.org

C: INSPECTION

1) Check that the oil flow control solenoid valve has no deformation, cracks or other damages.
2) Measure the resistance between the oil flow control solenoid valve terminals.

- Intake oil flow control solenoid valve

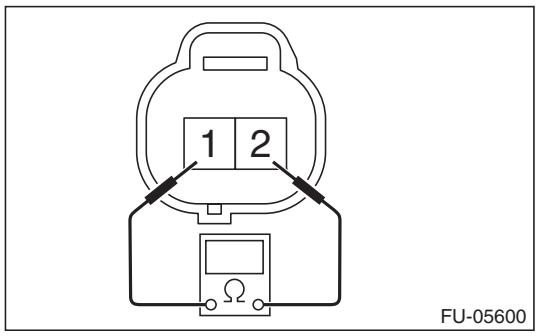

- Exhaust oil flow control solenoid valve

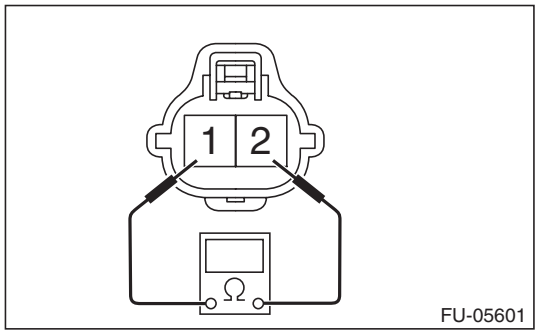

Terminal No.	Standard
1 and 2	7.4±0.5 Ω (when 20°C (68°F))

GETtheMANUALS.org

14. Oil Temperature Sensor

A: REMOVAL

1) Remove the collector cover.

NOTE:
Follow these procedures for removal of the collector cover.
(1) Lift up the rear side holding two positions (A).
(2) Lift up the front side holding two positions (B) while moving it in the forward direction of the vehicle.

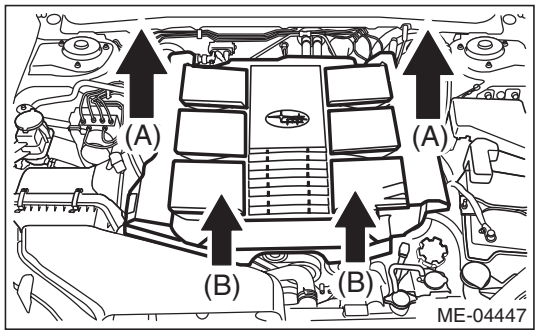

2) Disconnect the ground cable from battery.
3) Disconnect the connector from oil temperature sensor.

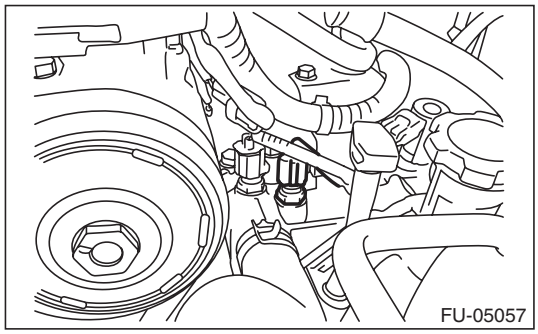

4) Remove the oil temperature sensor.

B: INSTALLATION

Install in the reverse order of removal.

Tightening torque:
22 N·m (2.2 kgf-m, 16.2 ft-lb)

C: INSPECTION

1) Check that the oil temperature sensor has no deformation, cracks or other damages.
2) Check the resistance between the oil temperature sensor terminals.

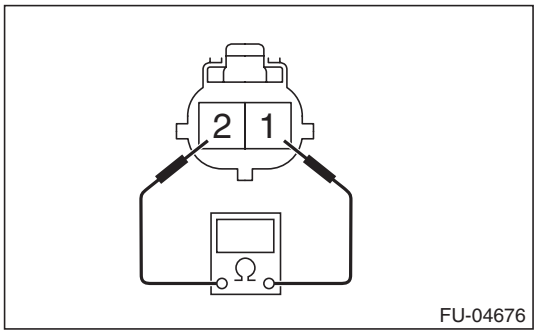

Terminal No.	Standard
1 and 2	2.45±0.2 Ω (when 20°C (68°F))

GETtheMANUALS.org

15. Front Oxygen (A/F) Sensor

A: REMOVAL

1) Disconnect the ground cable from battery.
2) Lift up the vehicle.
3) Disconnect the connector (A) of the front oxygen (A/F) sensor.

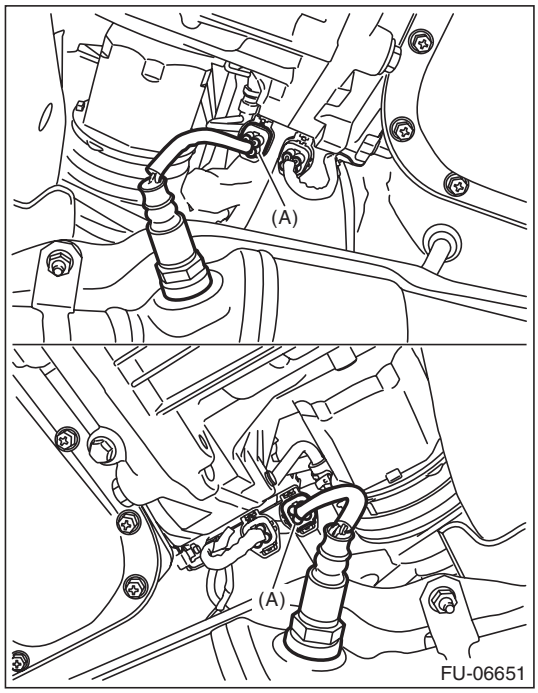

4) Apply spray-type lubricant to the threaded portion of front oxygen (A/F) sensor, and leave it for one minute or more.

5) Remove the front oxygen (A/F) sensor.

CAUTION:
When removing the front oxygen (A/F) sensor, wait until exhaust pipe cools, otherwise it will damage the exhaust pipe.

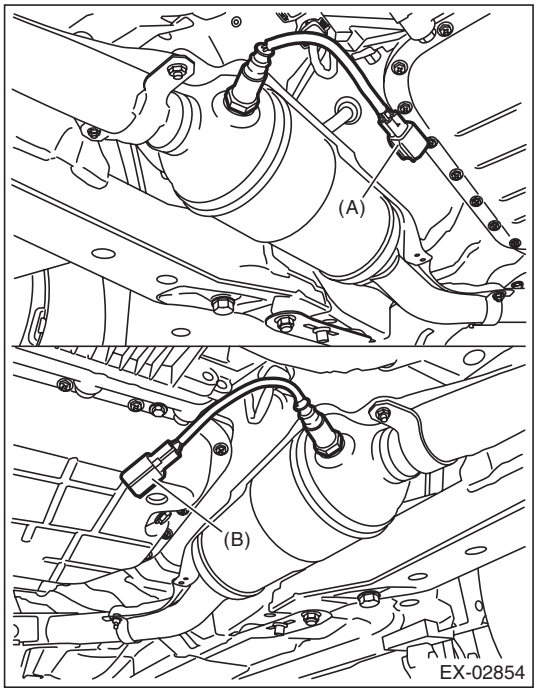

(A) Front oxygen (A/F) sensor RH
(B) Front oxygen (A/F) sensor LH

B: INSTALLATION

CAUTION:
If lubricant is spilt over the exhaust pipe, wipe it off with cloth to avoid emission of smoke or causing a fire.

1) Before installing front oxygen (A/F) sensor, apply anti-seize compound only to the threaded portion of front oxygen (A/F) sensor to make the next removal easier.

CAUTION:
Never apply anti-seize compound to the protector of front oxygen (A/F) sensor.

Anti-seize compound:
NEVER-SEEZ NSN, JET LUBE SS-30 or equivalent

GETtheMANUALS.org

2) Install the front oxygen (A/F) sensor.

Tightening torque:
21 N·m (2.1 kgf-m, 15.5 ft-lb)

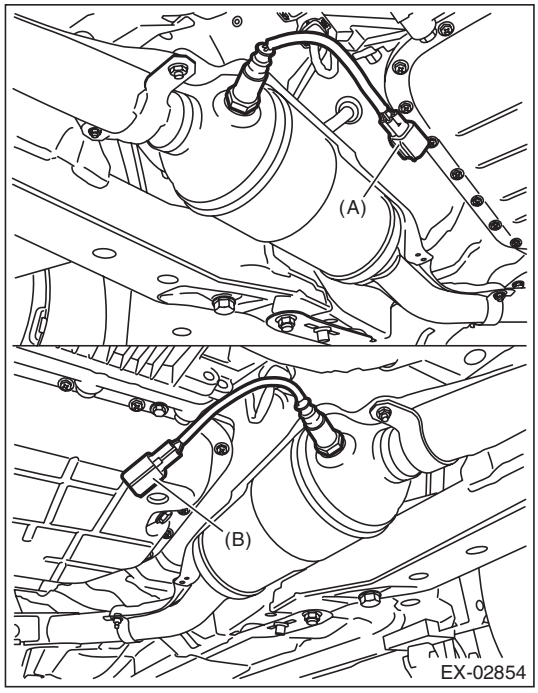

(A) Front oxygen (A/F) sensor RH
(B) Front oxygen (A/F) sensor LH

3) Connect the connector (A) of front oxygen (A/F) sensor.

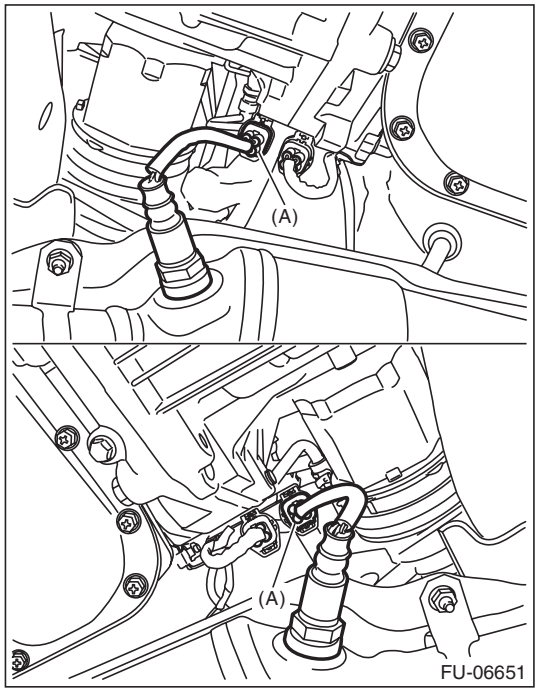

4) Lower the vehicle.
5) Connect the battery ground terminal.

C: INSPECTION

1) Check that the front oxygen (A/F) sensor has no deformation, cracks or other damages.
2) Measure the resistance between front oxygen (A/F) sensor terminals.

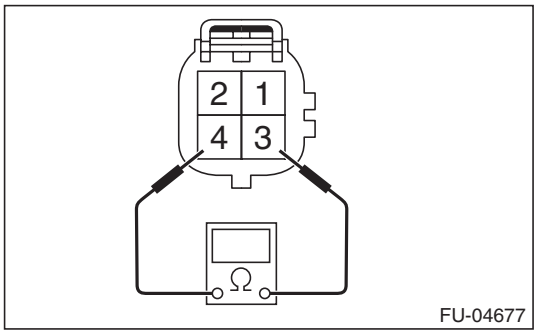

Terminal No.	Standard
3 and 4	2.4±0.24 Ω (when 20°C (68°F))

GETtheMANUALS.org

16. Rear Oxygen Sensor

A: REMOVAL

1) Disconnect the ground cable from battery.
2) Lift up the vehicle.
3) Remove the front exhaust pipe. <Ref. to EX(H6DO)-5, REMOVAL, Front Exhaust Pipe.>
4) Apply spray-type lubricant to the threaded portion of rear oxygen sensor, and leave it for one minute or more.
5) Remove the rear oxygen sensor.

CAUTION:
When removing the rear oxygen sensor, wait until exhaust pipe cools, otherwise it will damage the exhaust pipe.

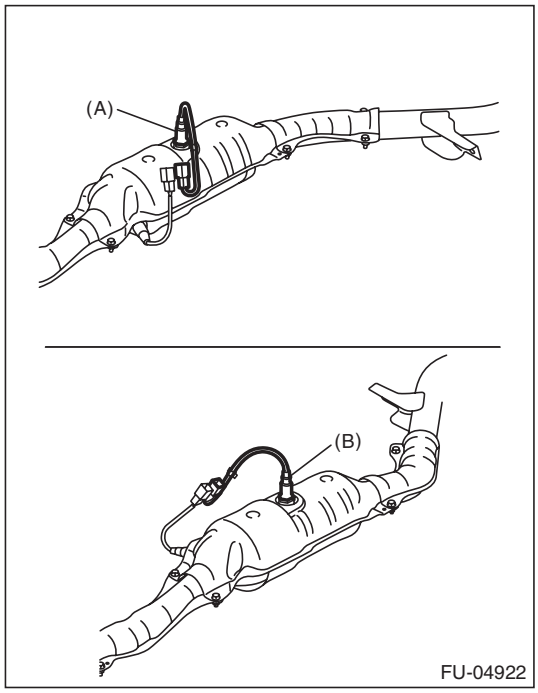

(A) Rear oxygen sensor RH
(B) Rear oxygen sensor LH

B: INSTALLATION

CAUTION:
If lubricant is spilt over the exhaust pipe, wipe it off with cloth to avoid emission of smoke or causing a fire.

1) Before installing rear oxygen sensor, apply the anti-seize compound only to the threaded portion of rear oxygen sensor to make the next removal easier.

CAUTION:
Never apply anti-seize compound to the protector of rear oxygen sensor.

Anti-seize compound:
NEVER-SEEZ NSN, JET LUBE SS-30 or equivalent

2) Install the rear oxygen sensor.

Tightening torque:
21 N·m (2.1 kgf-m, 15.5 ft-lb)

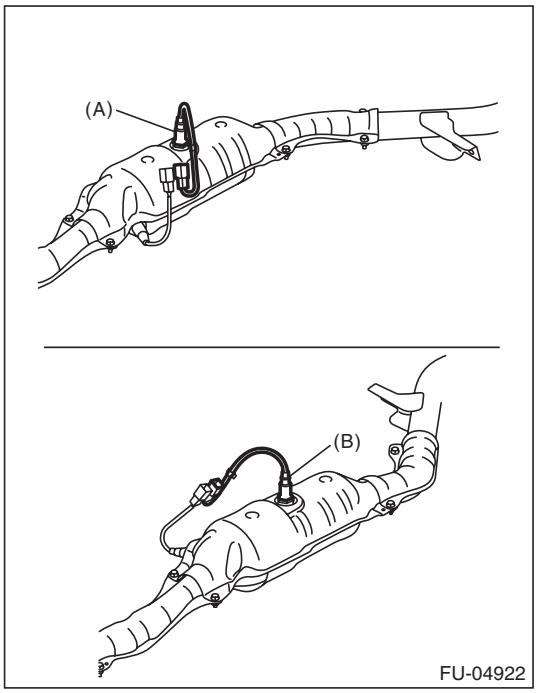

(A) Rear oxygen sensor RH
(B) Rear oxygen sensor LH

3) Install the front exhaust pipe. <Ref. to EX(H6DO)-6, INSTALLATION, Front Exhaust Pipe.>
4) Lower the vehicle.
5) Connect the ground cable to battery.

GETtheMANUALS.org

C: INSPECTION

1) Check the rear oxygen (A/F) sensor for deformation, cracks or other damages.
2) Check the resistance between rear oxygen (A/F) sensor terminals.

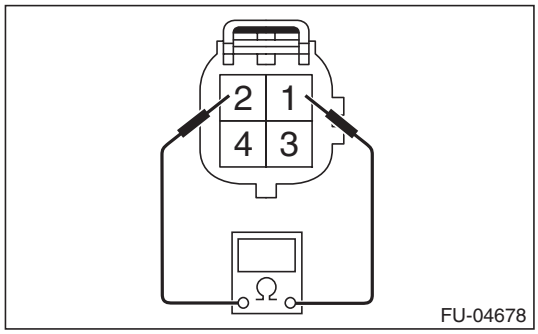

Terminal No.	Standard
1 and 2	$5.6^{+0.8}_{-0.6}$ Ω (when 20°C (68°F))

GETtheMANUALS.org

17. Engine Control Module (ECM)

A: REMOVAL

1) Disconnect the ground cable from battery.
2) Remove the glove box lid assembly. <Ref. to EI-66, REMOVAL, Glove Box.>
3) Disconnect the connectors from ECM.

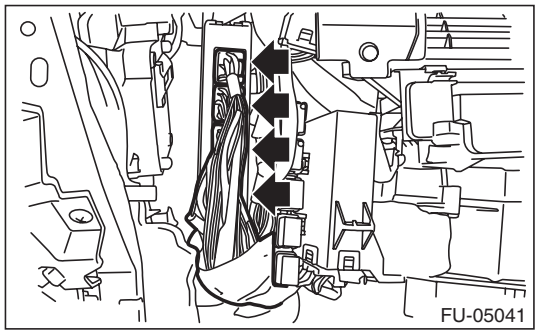

4) Remove the ECM from vehicle.

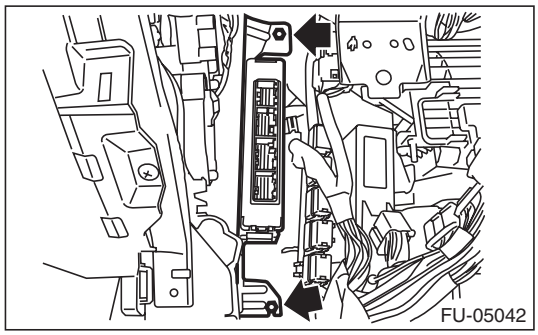

B: INSTALLATION

Install in the reverse order of removal.

Tightening torque:
7.5 N·m (0.8 kgf-m, 5.5 ft-lb)

CAUTION:
- **When the ECM of model with immobilizer has been replaced, be sure to perform the registration of immobilizer system. (Refer to "PC application help for Subaru Select Monitor".)**
- **If replacing ECM or the bracket, replace both parts with new parts at a time.**
- **After installing the bracket to ECM, do not separate the bracket.**
- **If the bracket has been installed to ECM in the wrong direction, replace both parts to new parts.**

NOTE:
When replacing the ECM, be careful not to use the wrong spec. ECM to avoid any damage on the fuel injection system.

C: INSPECTION

Check that the ECM has no deformation, cracks or other damages.

GETtheMANUALS.org

18.Main Relay

A: REMOVAL

1) Disconnect the ground cable from battery.
2) Remove the glove box lid assembly. <Ref. to EI-66, REMOVAL, Glove Box.>
3) Remove the main relay.

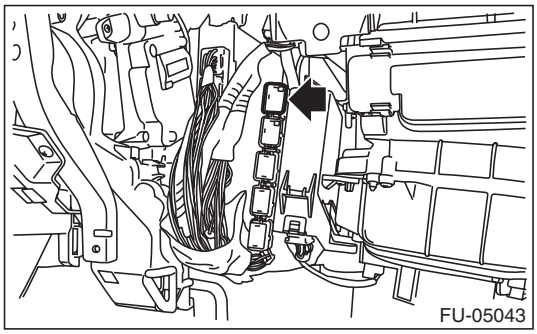

B: INSTALLATION

Install in the reverse order of removal.

C: INSPECTION

1) Check that the main relay has no deformation, cracks or other damages.
2) Measure the resistance between main relay terminals.

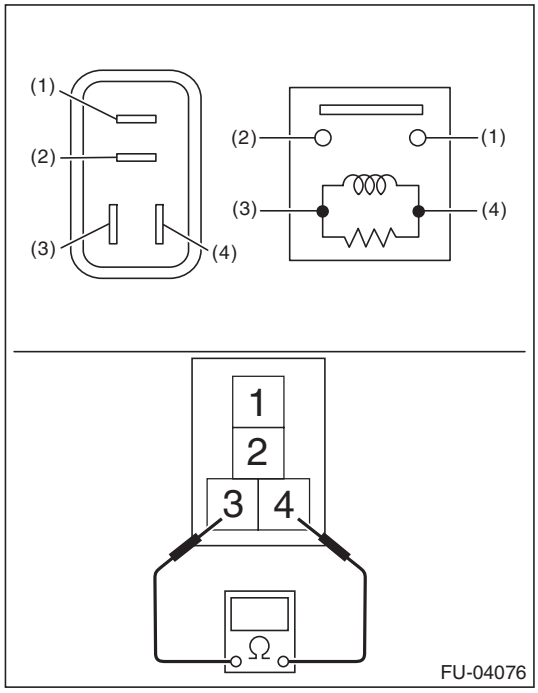

Terminal No.	Standard
1 and 2	1 MΩ or more
3 and 4	130.4 — 230.8 Ω (when 20°C (68°F))

3) Connect battery positive terminal to terminal No. 3 and battery ground terminal to terminal No. 4, and measure the resistance between the main relay terminals.

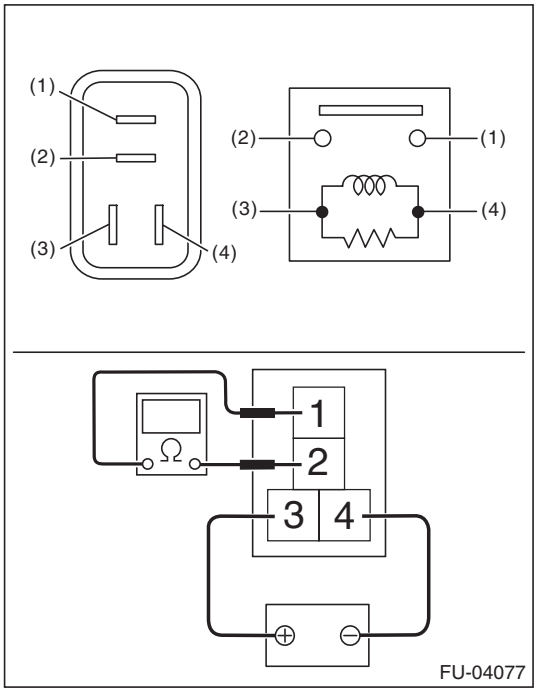

Terminal No.	Standard
1 and 2	Less than 1 Ω

GETtheMANUALS.org

19. Fuel Pump Relay

A: REMOVAL

1) Disconnect the ground cable from battery.
2) Remove the glove box lid assembly. <Ref. to EI-66, REMOVAL, Glove Box.>
3) Remove the fuel pump relay.

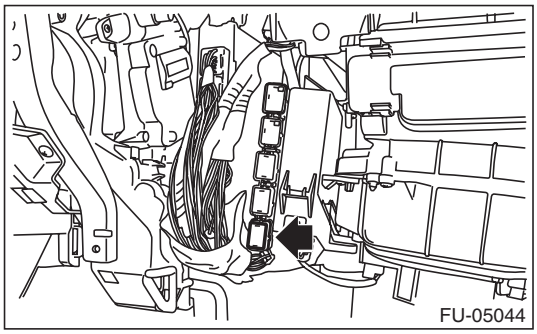

B: INSTALLATION

Install in the reverse order of removal.

C: INSPECTION

1) Check that the fuel pump relay has no deformation, cracks or other damages.
2) Measure the resistance between fuel pump relay terminals.

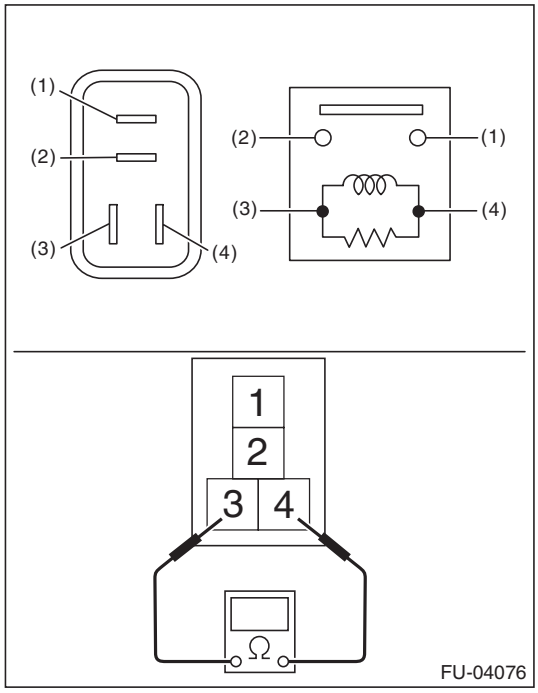

Terminal No.	Standard
1 and 2	1 MΩ or more
3 and 4	93.8 — 136.4 Ω (when 20°C (68°F))

3) Connect battery positive terminal to terminal No. 3 and battery ground terminal to terminal No. 4, and measure the resistance between the fuel pump relay terminals.

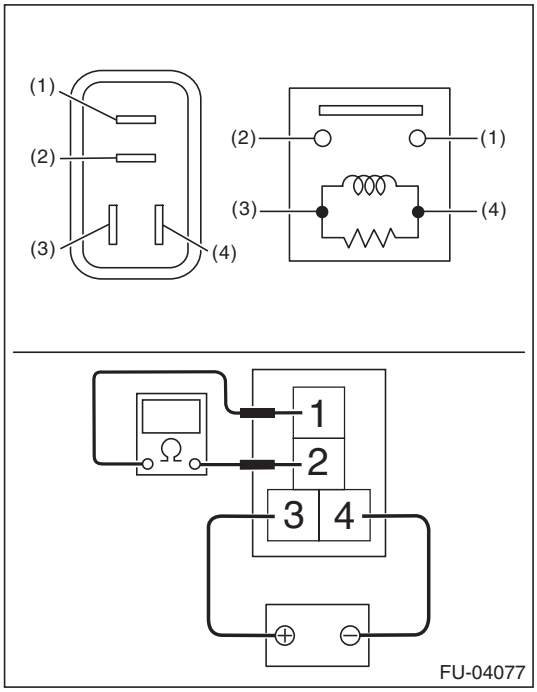

Terminal No.	Standard
1 and 2	Less than 1 Ω

GETtheMANUALS.org

20. Electronic Throttle Control Relay

A: REMOVAL

1) Disconnect the ground cable from battery.
2) Remove the glove box lid assembly. <Ref. to EI-66, REMOVAL, Glove Box.>
3) Remove the electronic throttle control relay.

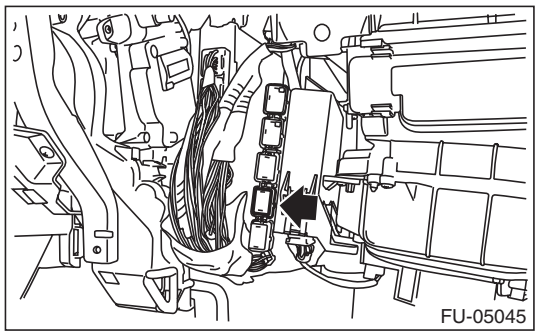

B: INSTALLATION

Install in the reverse order of removal.

C: INSPECTION

1) Check that the electronic throttle control relay has no deformation, cracks or other damages.
2) Measure the resistance between electronic throttle control relay terminals.

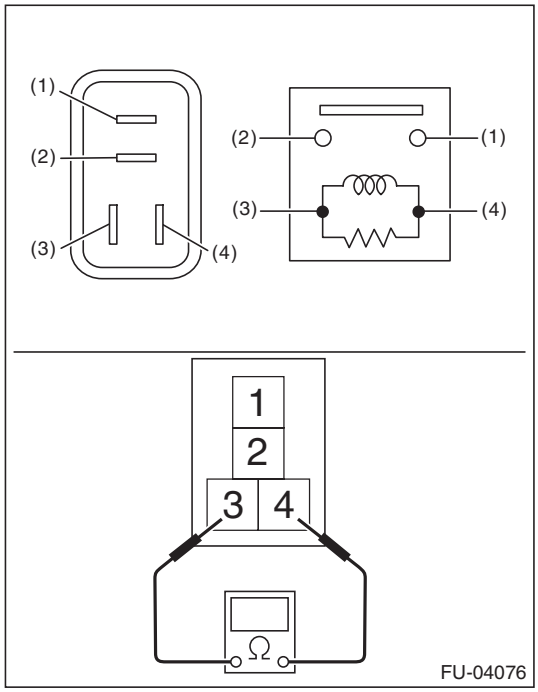

Terminal No.	Standard
1 and 2	1 MΩ or more
3 and 4	93.8 — 136.4 Ω (when 20°C (68°F))

3) Connect battery positive terminal to terminal No. 3 and battery ground terminal to terminal No. 4, and measure the resistance between the electronic throttle control relay terminals.

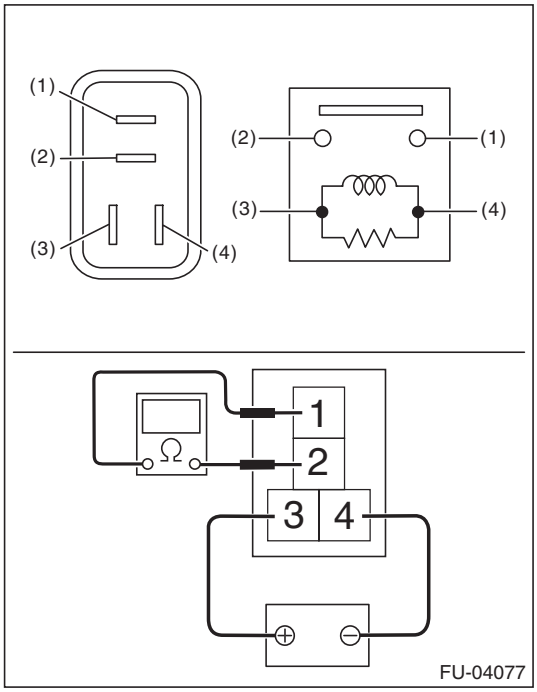

Terminal No.	Standard
1 and 2	Less than 1 Ω

GETtheMANUALS.org

21.Fuel Pump Control Unit

A: REMOVAL

1) Disconnect the ground cable from battery.
2) Remove the trunk trim panel assembly - side on the RH side. (Sedan model) <Ref. to EI-110, REMOVAL, Rear Quarter Trim.>
3) Remove the right side rear quarter trim. (OUTBACK model) <Ref. to EI-110, REMOVAL, Rear Quarter Trim.>
4) Remove the fuel pump control unit.

- Sedan model

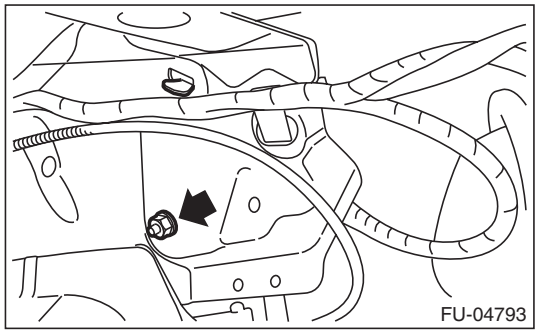

- OUTBACK model

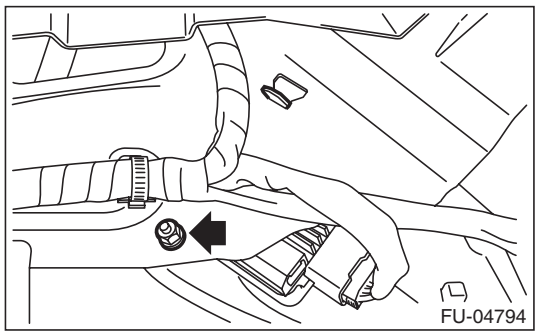

5) Disconnect the connector from fuel pump control unit.

- Sedan model

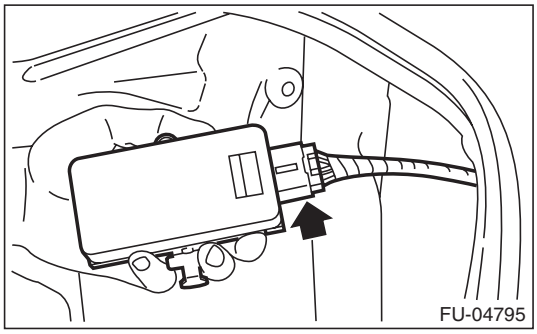

- OUTBACK model

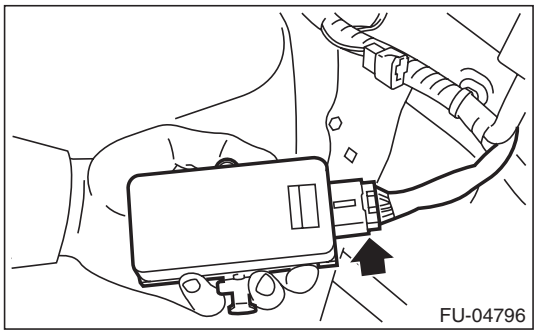

B: INSTALLATION

Install in the reverse order of removal.

Tightening torque:
5 N·m (0.5 kgf-m, 3.7 ft-lb)

C: INSPECTION

Check that the fuel pump control unit has no deformation, cracks or other damages.

GETtheMANUALS.org

22. Fuel

A: PROCEDURE

1. RELEASING OF FUEL PRESSURE

WARNING:
Place "NO OPEN FLAMES" signs near the working area.

CAUTION:
Be careful not to spill fuel.

1) Remove the fuse of fuel pump from main fuse box.

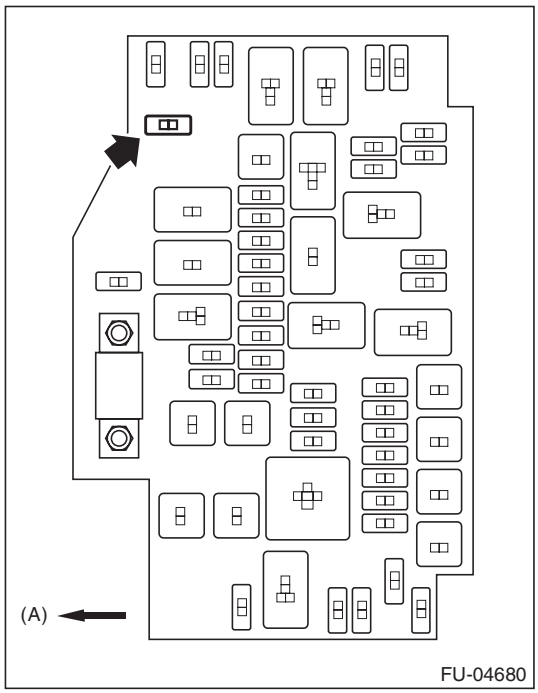

(A) Front side

2) Start the engine and run it until it stalls.
3) After the engine stalls, crank it for five more seconds.
4) Turn the ignition switch to OFF.
5) Install the fuse of fuel pump to the main fuse box.

2. DRAINING FUEL (WITH SUBARU SELECT MONITOR)

WARNING:
Place "NO OPEN FLAMES" signs near the working area.

CAUTION:
Be careful not to spill fuel.

NOTE:
- If the fuel pump cannot be driven, refer to the procedures for draining from the fuel filler hose. <Ref. to FU(H6DO)-60, DRAINING FUEL (THROUGH THE FUEL FILLER HOSE), PROCEDURE, Fuel.>
- Be careful not to let the battery run-out.

1) Release the fuel pressure. <Ref. to FU(H6DO)-59, RELEASING OF FUEL PRESSURE, PROCEDURE, Fuel.>
2) Remove the collector cover.

NOTE:
Follow the steps below when removing the collector cover.
(1) Pull up the two points at the rear (A).
(2) Pull up the two points at the front (B) while moving them forward.

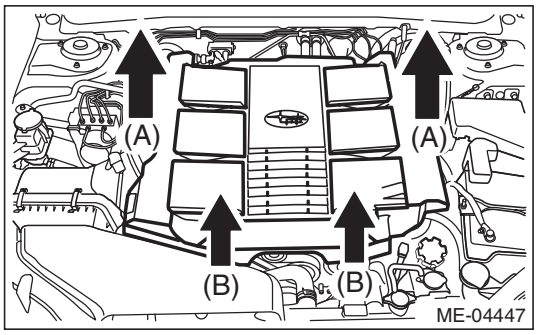

3) Attach ST to the fuel delivery pipe and push ST in the direction of arrow mark to disconnect the fuel delivery hose.

ST 42099AE000 QUICK CONNECTOR RELEASE

CAUTION:
- **Be careful not to spill fuel.**
- **Catch the fuel from hoses using a container or cloth.**

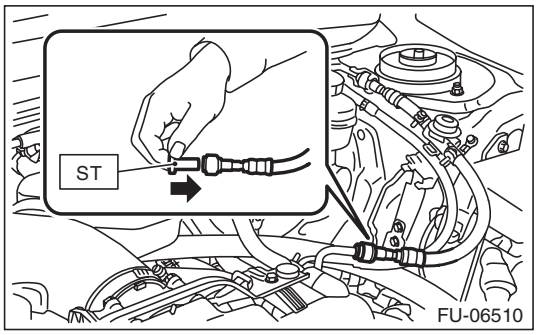

GETtheMANUALS.org

4) Connect ST to the fuel delivery hose.
ST 18471AA000 FUEL PIPE ADAPTER
5) Connect the gasoline proof hose to ST and put the end of the hose in the container.
6) Drive the fuel pump and drain the fuel using Subaru Select Monitor. (Refer to “PC application help for Subaru Select Monitor”.)

CAUTION:
Be careful not to spill fuel.
7) Install the related parts in the reverse order after draining the fuel.

3. DRAINING FUEL (THROUGH THE FUEL FILLER HOSE)

WARNING:
Place “NO OPEN FLAMES” signs near the working area.

CAUTION:
- **Be careful not to spill fuel.**
- **Fuel may remain in the fuel filler pipe. Draining the fuel from the fuel filler pipe through the fill opening using the gasoline proof pump and the gasoline proof hose (ø10 or less) before the operation.**

1) Lift up the vehicle.
2) Remove the rear exhaust pipe and muffler. <Ref. to EX(H6DO)-8, REMOVAL, Rear Exhaust Pipe.> <Ref. to EX(H6DO)-10, REMOVAL, Muffler.>
3) Open the fuel filler lid and remove the fuel filler cap.
4) Drain the fuel from the fuel filler pipe through the filler opening using the gasoline proof pump and the gasoline proof hose (ø10 or less).
5) Disconnect the fuel filler hoses from the fuel filler pipe.

CAUTION:
- **Be careful not to spill fuel.**
- **Catch the fuel from hoses using a container or cloth.**

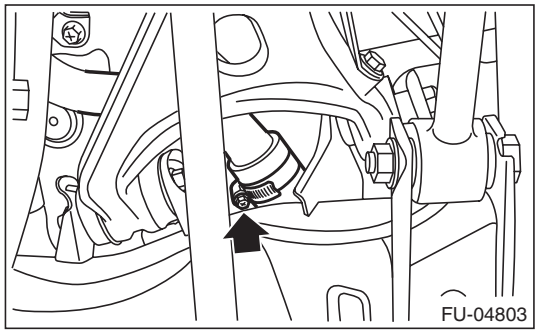

6) Set the container under the vehicle and insert the gasoline proof hose (ø10 or less) into the fuel filler hose to drain the fuel.

CAUTION:
Be careful not to spill fuel.
7) Install the related parts in the reverse order after draining the fuel.

Tightening torque:
2.5 N·m (0.3 kgf-m, 1.8 ft-lb)

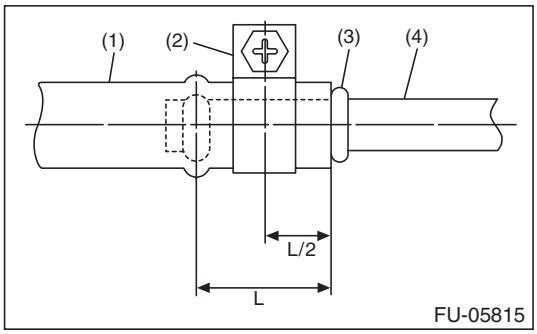

(1) Fuel filler hose
(2) Clamp
(3) Spool
(4) Fuel filler pipe

GETtheMANUALS.org

23. Fuel Tank

A: REMOVAL

WARNING:
Place "NO OPEN FLAMES" signs near the working area.

CAUTION:
Be careful not to spill fuel.

1) Release the fuel pressure. <Ref. to FU(H6DO)-59, RELEASING OF FUEL PRESSURE, PROCEDURE, Fuel.>
2) Drain fuel. <Ref. to FU(H6DO)-59, DRAINING FUEL (WITH SUBARU SELECT MONITOR), PROCEDURE, Fuel.>
3) Disconnect the ground cable from battery.
4) Remove the rear seat cushion. <Ref. to SE-34, REMOVAL, Rear Seat.>
5) Remove the clips (A) and seat cushion hooks (B), and turn over the floor mat (C).

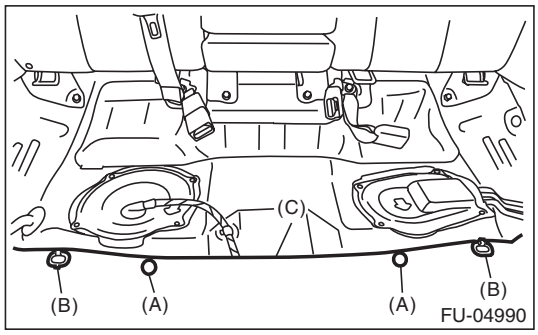

6) Remove the service hole cover of fuel pump.
   (1) Disconnect the fuel cord connector (A), and remove the clip (B).
   (2) Remove the screw (C).
   (3) Push the grommet (D) down and remove the service hole cover.

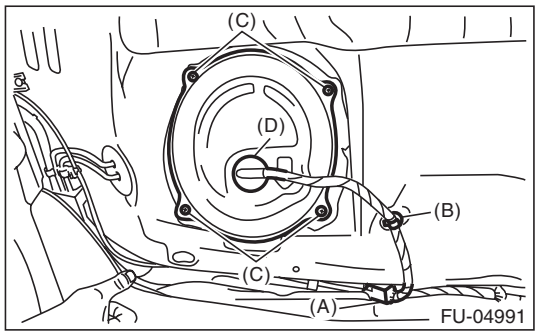

7) Remove the service hole cover of fuel sub level sensor.

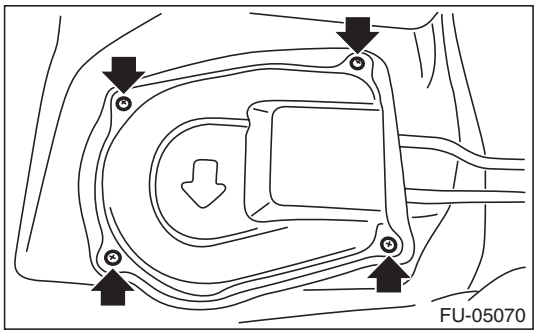

8) Disconnect the quick connector on the fuel delivery tube (A). <Ref. to FU(H6DO)-80, REMOVAL, Fuel Delivery and Evaporation Lines.>

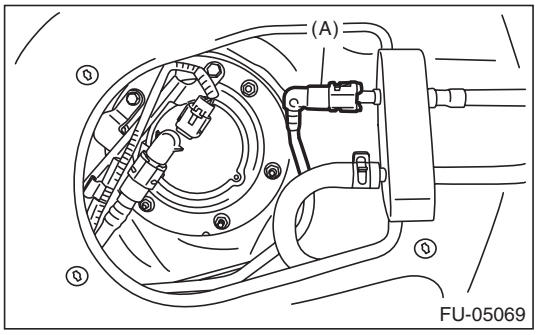

9) Remove the rear wheels.
10) Lift up the vehicle.
11) Remove the rear ABS wheel speed sensor from the rear housing.

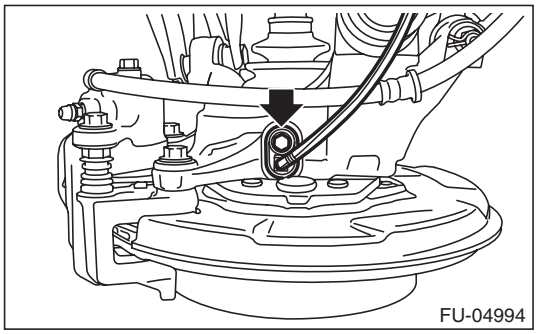

12) Remove the rear ABS wheel speed sensor harness bracket from the upper arm.

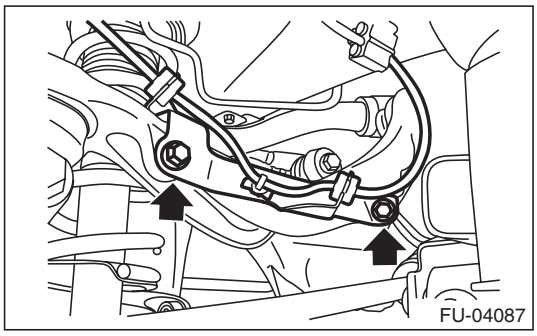

GETtheMANUALS.org

13) Remove the rear brake hose bracket from rear housing.

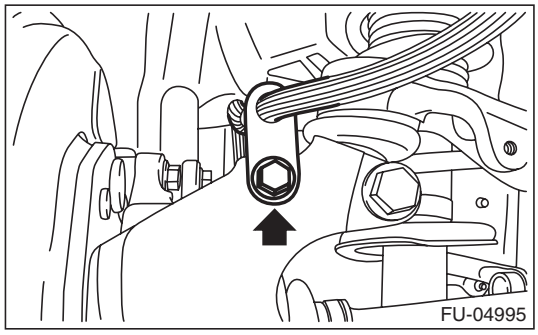

14) Remove the rear disc brake assembly and tie it to the body side of the vehicle.

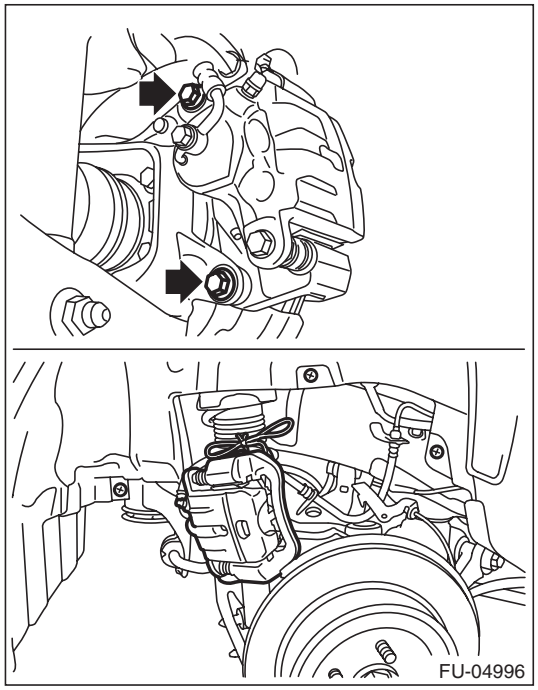

15) Remove the parking brake cable from parking brake assembly. <Ref. to PB-10, REMOVAL, Parking Brake Assembly (Rear Disc Brake).>
16) Remove the rear exhaust pipe and muffler. <Ref. to EX(H6DO)-8, REMOVAL, Rear Exhaust Pipe.> <Ref. to EX(H6DO)-10, REMOVAL, Muffler.>

17) Remove the heat shield cover.

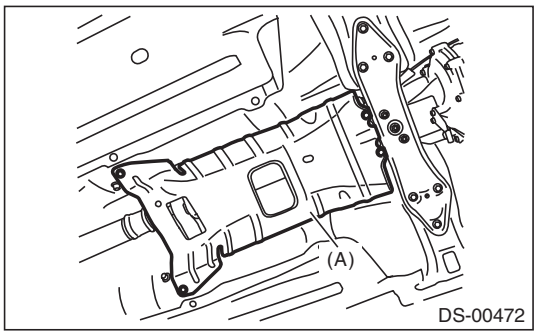

(A) Heat shield cover

18) Remove the propeller shaft. <Ref. to DS-10, REMOVAL, Propeller Shaft.>
19) Remove the clip (A) securing the fuel tank protector and heat shield cover.
20) Remove the bolts (B) and nuts (C) securing the fuel tank protector, and remove the fuel tank protector.

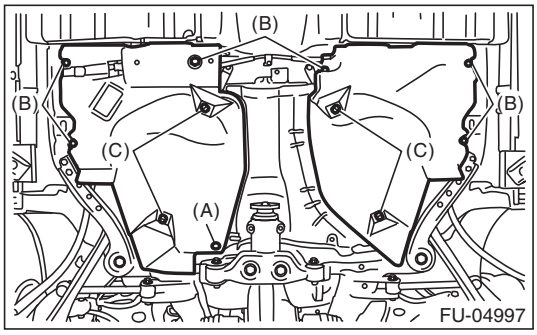

21) Remove the bolts and nuts securing the heat shield cover and remove the heat shield cover.

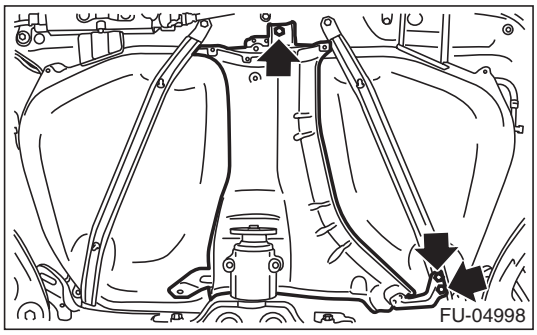

22) Remove the rear suspension assembly.

WARNING:
A helper is required to perform this work.

(1) Support the rear differential with the transmission jack.

GETtheMANUALS.org

(2) Remove the bolt and nut which secures rear shock absorber to rear suspension arm.

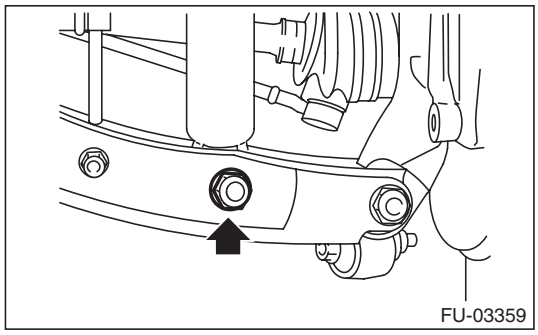

(3) Remove the bolts which secure the rear suspension assembly to the body.

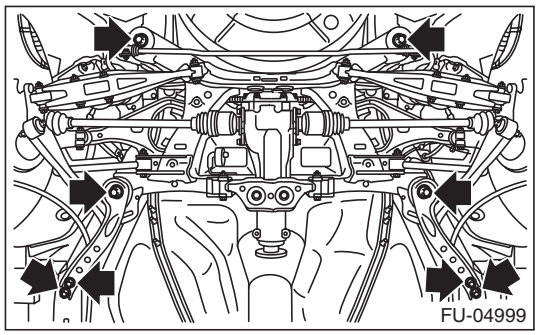

(4) Remove the rear suspension assembly.

23) Disconnect the air vent hose from the fuel tank.

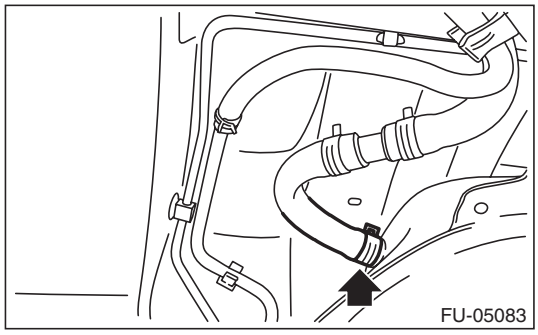

24) Disconnect the quick connector of the circulate tube from evaporation pipe.

NOTE:
Disconnect the quick connector as shown in the figure.

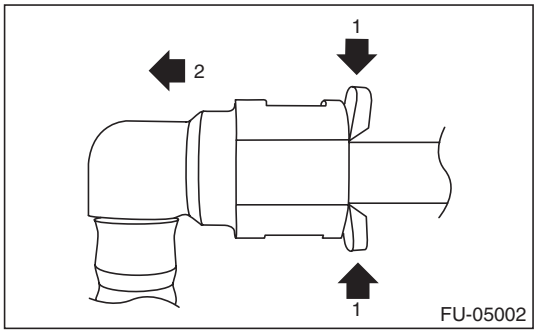

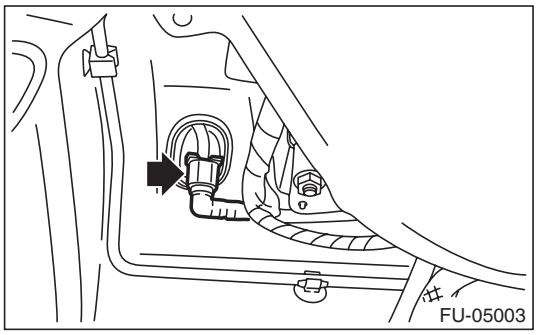

25) Disconnect the fuel filler hose from the fuel filler pipe assembly.

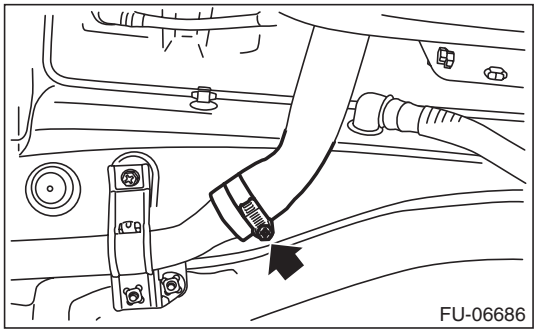

GETtheMANUALS.org

26) Support the fuel tank with a transmission jack, remove the bolts from the fuel tank band, and remove the fuel tank from the vehicle.

WARNING:
- **A helper is required to perform this work.**
- **Fuel may remain in the fuel tank. This will cause the left and right sides to be unbalanced. Be careful not to drop the fuel tank when removing.**

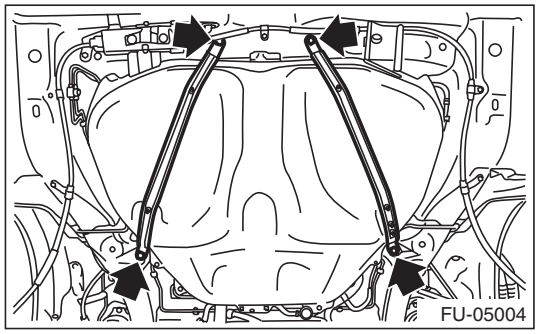

B: INSTALLATION

1) Support the fuel tank with a transmission jack, set the fuel tank in place, and temporarily tighten the bolts of the fuel tank band.

WARNING:
A helper is required to perform this work.

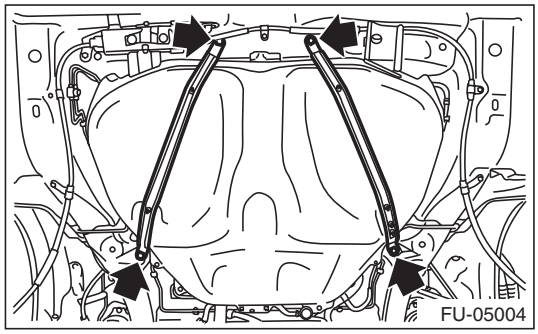

2) Securely insert the fuel filler hose to the spool, and then install a clamp or clip as shown.

Tightening torque:
2.5 N·m (0.3 kgf-m, 1.8 ft-lb)

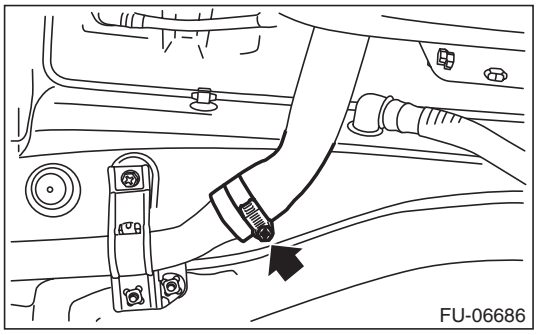

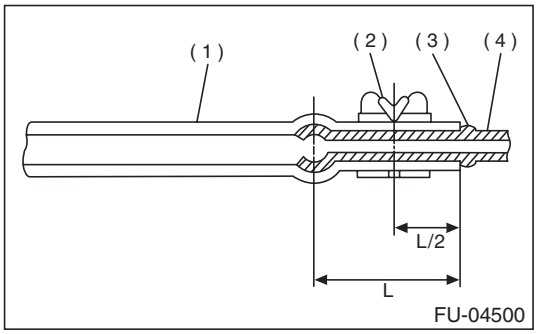

(1) Hose
(2) Clamp or clip
(3) Spool
(4) Pipe

GETtHEMANUALS.org

3) Connect the quick connector of the circulate tube to the evaporation pipe as shown in the figure.

CAUTION:
- **Check that there is no damage or dust on the quick connector. If necessary, clean the seal surface of the pipe.**
- **Make sure that the quick connector is securely connected.**

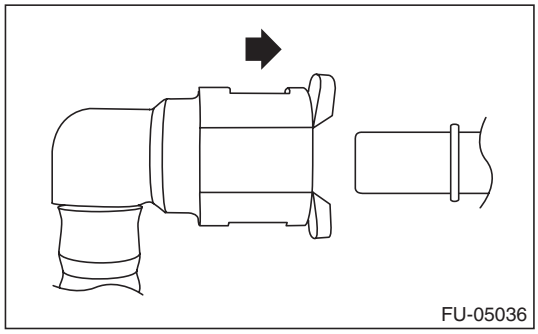

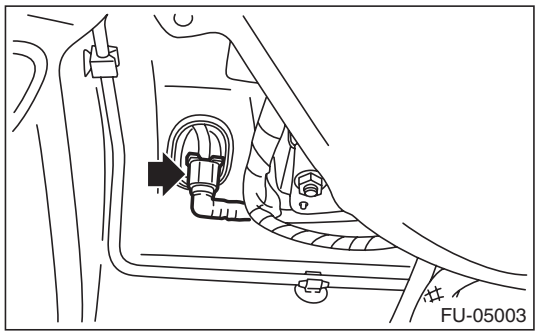

4) Connect the air vent hose to fuel tank.

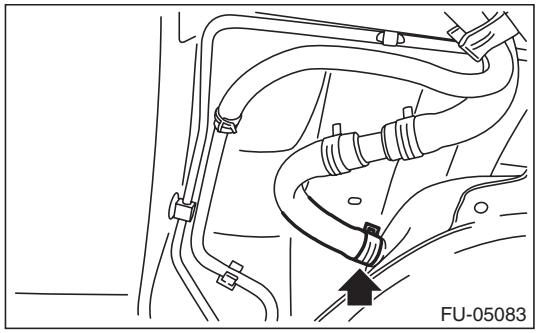

5) Move the fuel tank so that the distance between the center of the positioning hole for the body (A) and the front end of the fuel tank flange (B) becomes L, and tighten the bolts of the fuel tank bands in the sequence shown in the figure.

CAUTION:
To prevent the fuel tank from damage, after tightening the bolts of the fuel tank bands, make sure that the distance between the center of the positioning hole for the body (A) and the front end of the fuel tank flange (B) is L.

Distance L: Center of the positioning hole for the body (A) — Front end of the fuel tank flange (B)
14.5 mm (0.571 in) or less

Tightening torque:
33 N·m (3.4 kgf-m, 24.3 ft-lb)

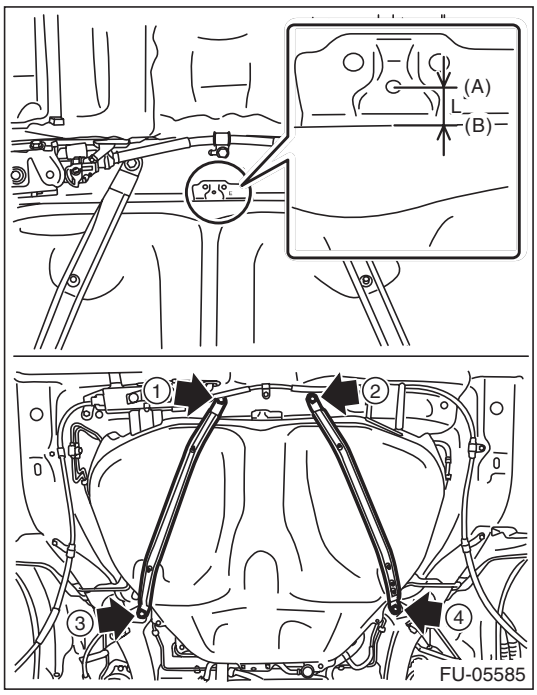

6) Install the rear suspension assembly.

WARNING:
A helper is required to perform this work.

(1) Support the rear differential with the transmission jack.
(2) Support the rear suspension assembly and install the rear suspension assembly to the body.

Tightening torque:
T1: 70 N·m (7.1 kgf-m, 51.6 ft-lb)
T2: 200 N·m (20.4 kgf-m, 147.5 ft-lb)

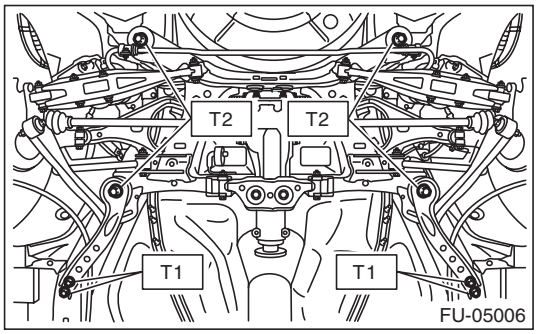

GETtheMANUALS.org

(3) Install the rear shock absorber to the rear suspension arm.

NOTE:
Use a new self-locking nut.

Tightening torque:
120 N·m (12.2 kgf-m, 88.5 ft-lb)

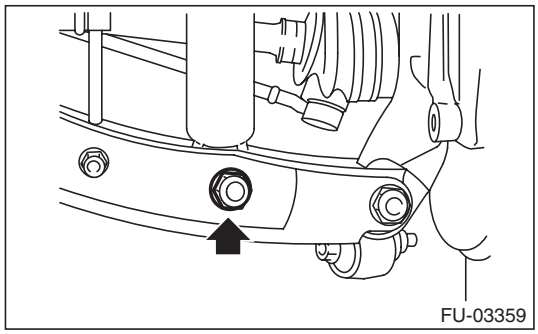

7) Install the heat shield cover.

Tightening torque:
18 N·m (1.8 kgf-m, 13.3 ft-lb)

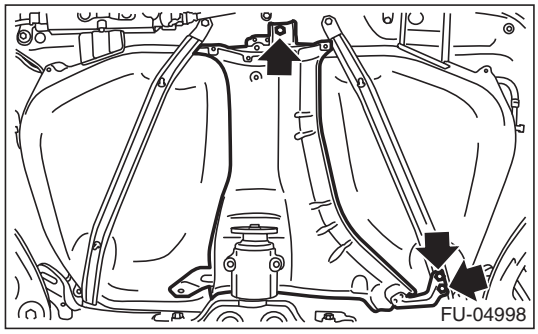

8) Install the bolts (B) and nuts (C) securing the fuel tank protector and install the clip (A) securing the fuel tank protector and heat shield cover.

Tightening torque:
Nut (C): 9 N·m (0.9 kgf-m, 6.6 ft-lb)
Bolt (B): 18 N·m (1.8 kgf-m, 13.3 ft-lb)

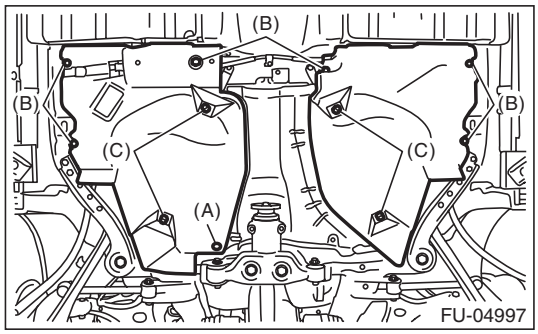

9) Install the propeller shaft. <Ref. to DS-11, INSTALLATION, Propeller Shaft.>

10) Install the heat shield cover.

Tightening torque:
18 N·m (1.8 kgf-m, 13.3 ft-lb)

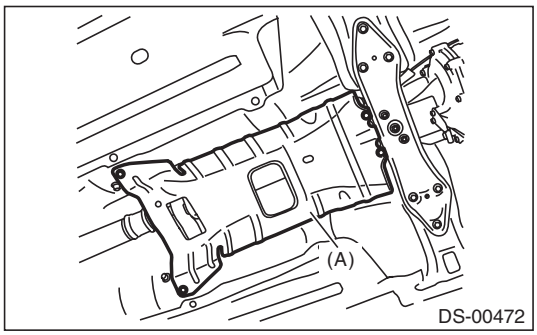

(A) Heat shield cover

11) Install the rear exhaust pipe and muffler. <Ref. to EX(H6DO)-8, INSTALLATION, Rear Exhaust Pipe.> <Ref. to EX(H6DO)-10, INSTALLATION, Muffler.>
12) Lower the vehicle.
13) Connect the parking brake cable to the parking brake assembly. <Ref. to PB-14, INSTALLATION, Parking Brake Assembly (Rear Disc Brake).>
14) Install the rear disc brake assembly.

Tightening torque:
66 N·m (6.7 kgf-m, 48.7 ft-lb)

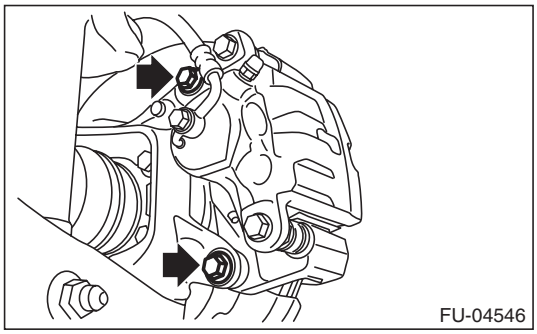

15) Install the rear brake hose bracket to the rear housing.

Tightening torque:
33 N·m (3.4 kgf-m, 24.3 ft-lb)

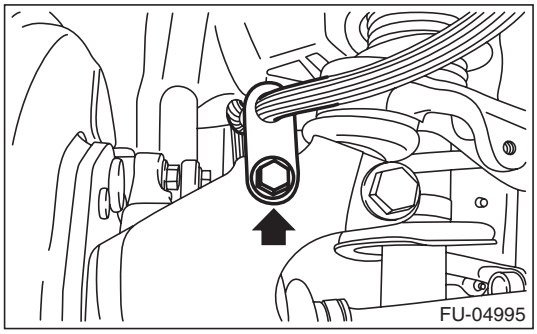

GETtheMANUALS.org

16) Install the rear ABS wheel speed sensor harness bracket to the upper arm.

Tightening torque:
7.5 N·m (0.8 kgf-m, 5.5 ft-lb)

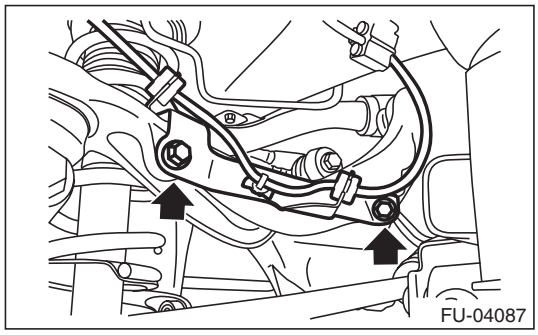

17) Attach the rear ABS wheel speed sensor to the rear housing.

Tightening torque:
7.5 N·m (0.8 kgf-m, 5.5 ft-lb)

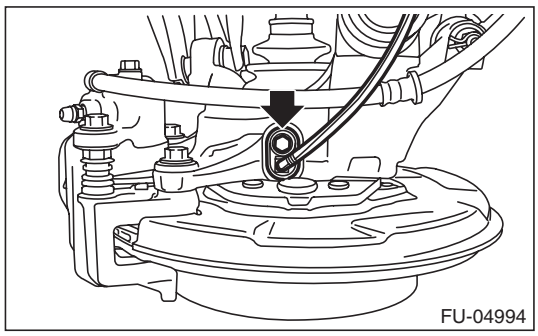

18) Install the rear wheels.

Tightening torque:
120 N·m (12.2 kgf-m, 88.5 ft-lb)

19) Connect the quick connector of the fuel delivery tube (A). <Ref. to FU(H6DO)-83, INSTALLATION, Fuel Delivery and Evaporation Lines.>

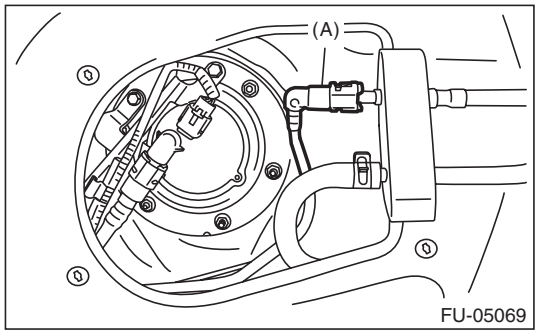

20) Install the service hole cover of fuel sub level sensor.

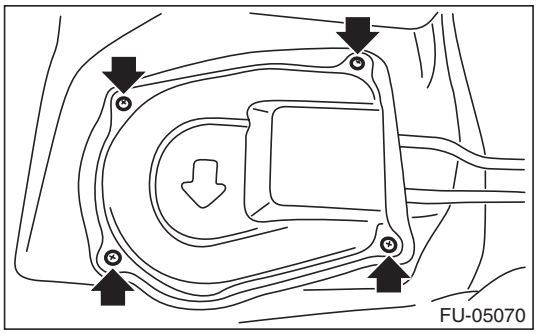

21) Attach the service hole cover of the fuel pump, and attach the connector and clip.

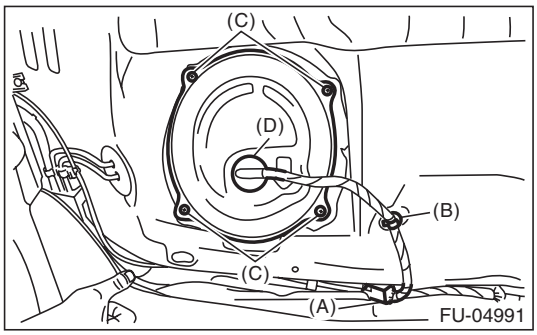

(A) Connector
(B) Clip
(C) Screw
(D) Grommet

22) Set the floor mat (C), and install clips (A) and seat cushion hooks (B).

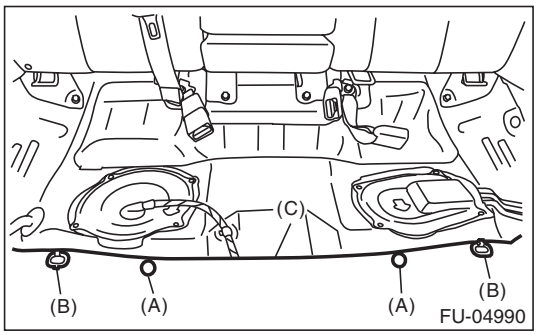

23) Install the rear seat cushion. <Ref. to SE-49, INSTALLATION, Rear Seat.>
24) Connect the battery ground terminal.
25) Inspect the wheel alignment and adjust if necessary.

C: INSPECTION

1) Check that the fuel tank and fuel pipe have no deformation, cracks and other damages.
2) Check that the fuel hose has no cracks, damage or loose part.

GETtheMANUALS.org

24. Fuel Filler Pipe

A: REMOVAL

WARNING:
Place "NO OPEN FLAMES" signs near the working area.

CAUTION:
Be careful not to spill fuel.

1) Release the fuel pressure. <Ref. to FU(H6DO)-59, RELEASING OF FUEL PRESSURE, PROCEDURE, Fuel.>
2) Drain fuel. <Ref. to FU(H6DO)-59, DRAINING FUEL (WITH SUBARU SELECT MONITOR), PROCEDURE, Fuel.>
3) Disconnect the ground cable from battery.
4) Open the fuel filler lid, and remove the filler cap.
5) Turn the fuel filler pipe protector in the direction of the arrow to unlock and remove it.

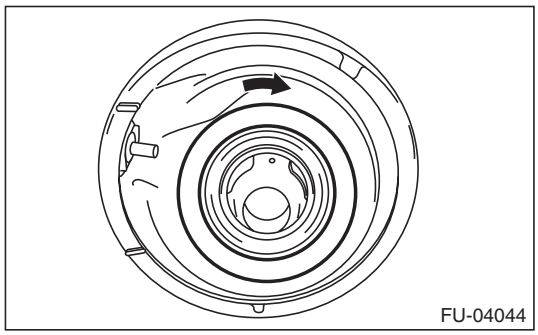

6) Remove the rear wheel RH.
7) Lift up the vehicle.
8) Remove the rear mud guard RH. <Ref. to EI-38, REMOVAL, Mud Guard.>
9) Remove the rear sub frame. <Ref. to RS-16, REMOVAL, Rear Sub Frame.>
10) Disconnect the fuel filler hose from the fuel filler pipe assembly.

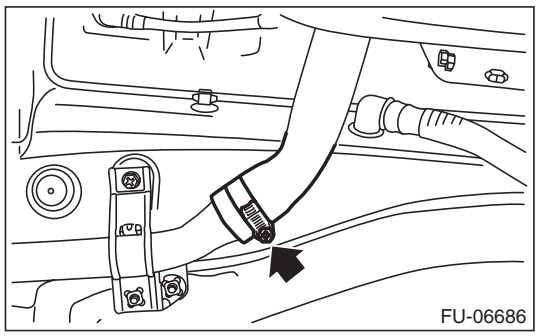

11) Disconnect the evaporation hose (A) from fuel filler pipe assembly and remove the bolts and nuts securing the fuel filler pipe assembly to the vehicle body.

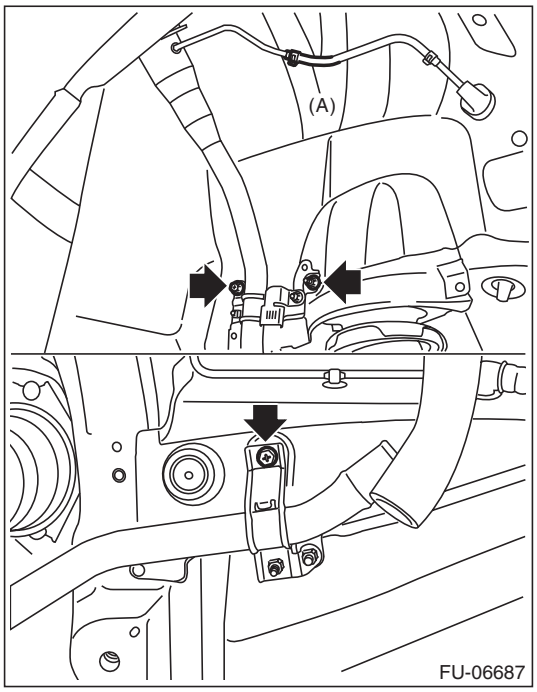

12) Remove the fuel filler pipe assembly from the underside of the vehicle.

GETtheMANUALS.org

B: INSTALLATION

1) Open the fuel filler lid.
2) Insert the fuel filler pipe assembly into the rubber saucer from inside of the rear fender.
3) Install the fuel filler pipe assembly to the vehicle body and connect the evaporation hose (A) to the fuel filler pipe assembly.

Tightening torque:
7.5 N·m (0.8 kgf-m, 5.5 ft-lb)

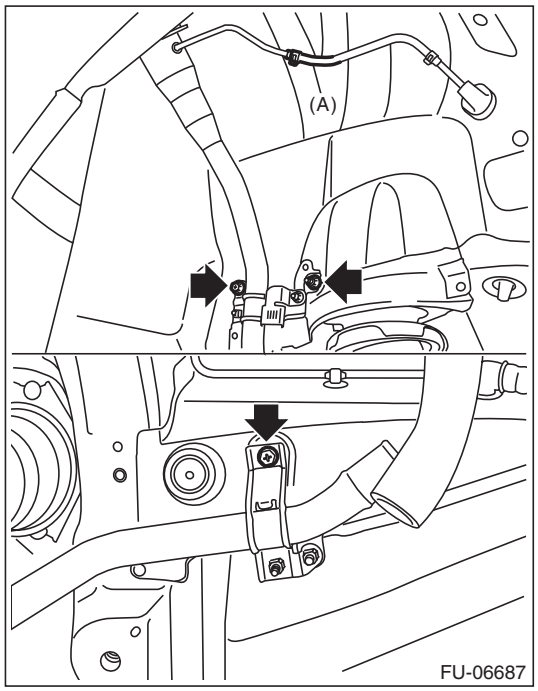

4) Align the cutout on the fuel filler pipe protector and the protrusion of the neck holder and insert them all the way, and then turn the fuel filler pipe protector in the direction of the arrow until it is locked.

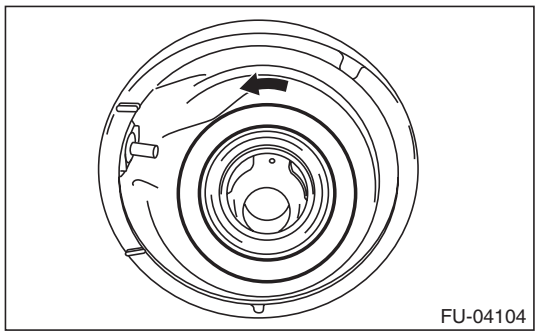

5) Securely insert the fuel filler hose (A) and circulate hose (B) to the spool, then attach the clamp or clip as shown in the figure.

Tightening torque:
2.5 N·m (0.3 kgf-m, 1.8 ft-lb)

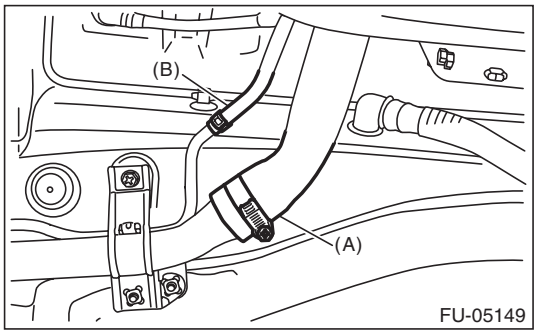

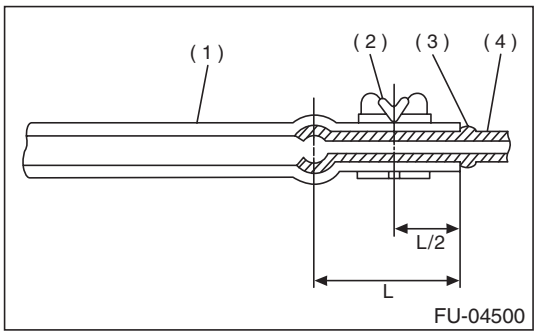

(1) Hose
(2) Clamp or clip
(3) Spool
(4) Pipe

6) Install the rear sub frame. <Ref. to RS-18, INSTALLATION, Rear Sub Frame.>
7) Install the rear mud guard RH. <Ref. to EI-38, INSTALLATION, Mud Guard.>
8) Lower the vehicle.
9) Install the rear wheel RH.

Tightening torque:
120 N·m (12.2 kgf-m, 88.5 ft-lb)

10) Connect the battery ground terminal.
11) Inspect the wheel alignment and adjust if necessary.

GETtheMANUALS.org

C: DISASSEMBLY

Remove the fuel filler pipe bracket from the fuel filler pipe.

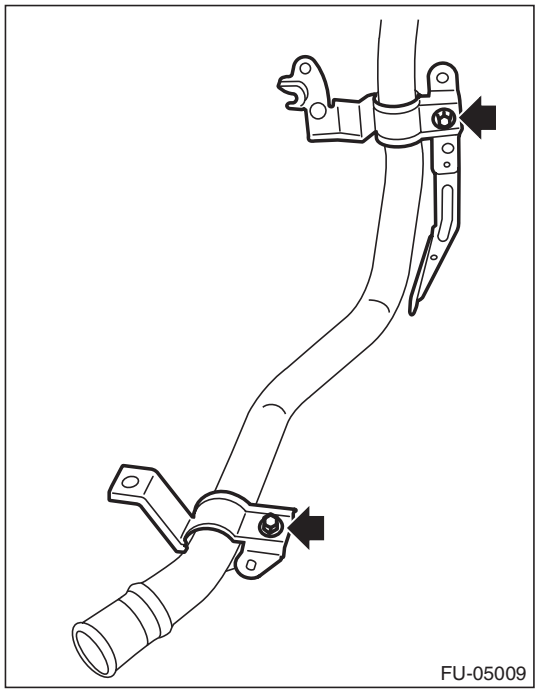

D: ASSEMBLY

Install the fuel filler pipe bracket to the fuel filler pipe.

Tightening torque:
7.35 N·m (0.7 kgf-m, 5.4 ft-lb)

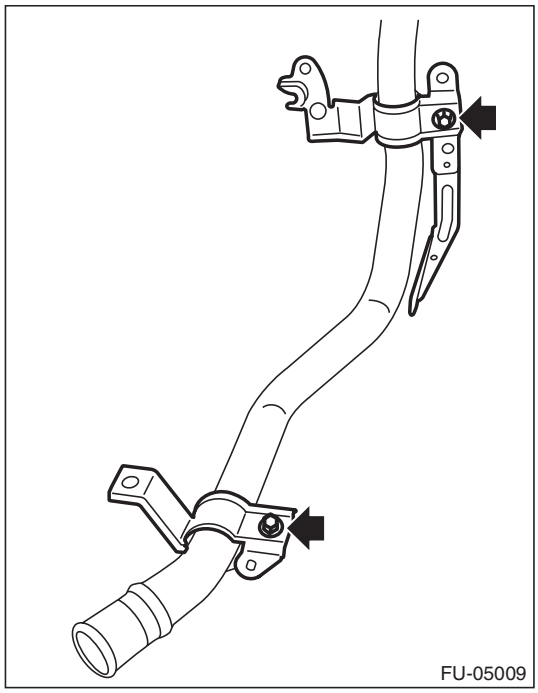

E: INSPECTION

Check that the fuel filler pipe does not have deformation, cracks or other damages.

GETtheMANUALS.org

25. Fuel Pump

A: REMOVAL

WARNING:
Place "NO OPEN FLAMES" signs near the working area.

CAUTION:
- **Be careful not to spill fuel.**
- **If the fuel gauge indicates that two thirds or more of the fuel is remaining, be sure to drain fuel before starting work to avoid the fuel to spill.**

NOTE:
Fuel pump assembly consists of fuel pump, fuel filter, fuel chamber and fuel level sensor.

1) Release the fuel pressure. <Ref. to FU(H6DO)-59, RELEASING OF FUEL PRESSURE, PROCEDURE, Fuel.>
2) Drain fuel. <Ref. to FU(H6DO)-59, DRAINING FUEL (WITH SUBARU SELECT MONITOR), PROCEDURE, Fuel.>
3) Disconnect the ground cable from battery.
4) Remove the rear seat cushion. <Ref. to SE-34, REMOVAL, Rear Seat.>
5) Remove the clips (A) and seat cushion hooks (B), and turn over the floor mat (C).

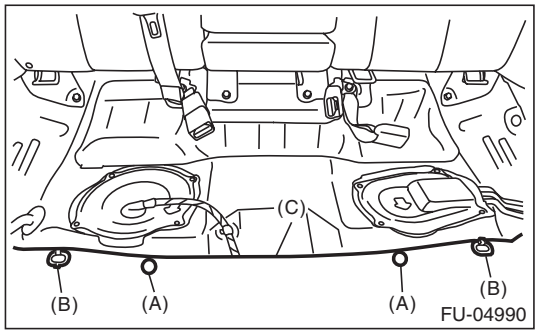

6) Remove the service hole cover.
   (1) Disconnect the fuel cord connector (A), and remove the clip (B).
   (2) Remove the screw (C).
   (3) Push the grommet (D) down and remove the service hole cover.

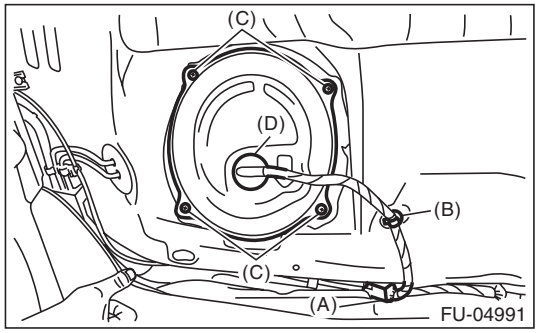

7) Disconnect the connector (A) from fuel pump, and remove the clip (B) securing the harness.
8) Disconnect the quick connector of fuel delivery tube (C) and fuel sub delivery tube (D). <Ref. to FU(H6DO)-80, REMOVAL, Fuel Delivery and Evaporation Lines.>

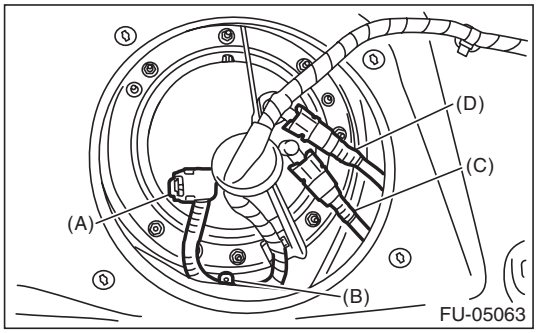

9) Remove the nuts securing the fuel pump upper plate to the fuel tank and remove the fuel pump upper plate.

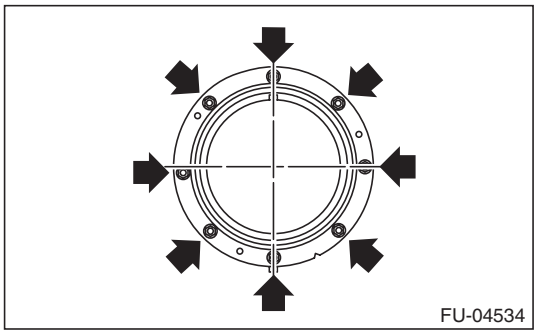

10) Remove the fuel pump assembly from the fuel tank.

GETtheMANUALS.org

B: INSTALLATION

Install in the reverse order of removal while being careful of the following.
• Make sure the sealing portion is free from fuel or foreign matter before installation.
• Align protrusion (A) of the gasket to the position shown in the figure.
• Insert the protrusion (B) of gasket to the fuel pump upper plate. (3 places)
• Align the protrusion (C) of fuel pump assembly with the cutout on the fuel pump upper plate.
• Tighten the nuts to the specified torque in the order as shown in the figure.

NOTE:
Use a new gasket.

Tightening torque:
4.4 N·m (0.4 kgf-m, 3.2 ft-lb)

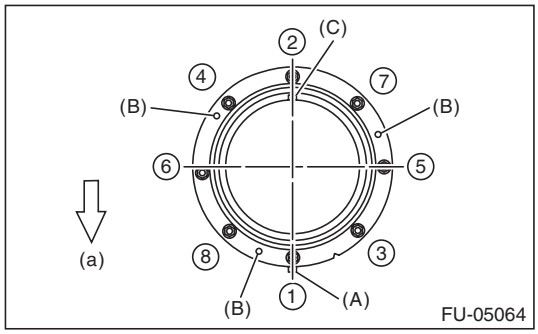

(a) Front side of vehicle

C: INSPECTION

1) Check that the fuel pump has no deformation, cracks or other damages.
2) Connect battery positive terminal to terminal No. 5 and battery ground terminal to terminal No. 6, and inspect the fuel pump operation.

WARNING:
• Wipe off fuel completely.
• Keep the battery as far apart from fuel pump as possible.
• Do not run the fuel pump for a long time under non-load condition.

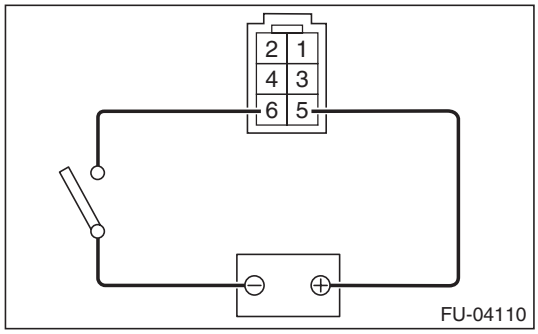

GETtheMANUALS.org

26. Fuel Level Sensor

A: REMOVAL

WARNING:
Place "NO OPEN FLAMES" signs near the working area.

CAUTION:
- **Be careful not to spill fuel.**
- **If the fuel gauge indicates that two thirds or more of the fuel is remaining, be sure to drain fuel before starting work to avoid the fuel to spill.**

NOTE:
The fuel level sensor is built in fuel pump assembly.

1) Remove the fuel pump assembly. <Ref. to FU(H6DO)-71, REMOVAL, Fuel Pump.>
2) Disconnect the connector from the fuel filter assembly.

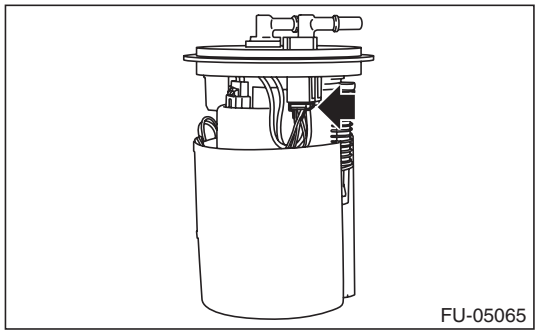

3) Remove the harness from the hooks (A) on the fuel chamber assembly and remove the fuel temperature sensor (B) from fuel chamber assembly.

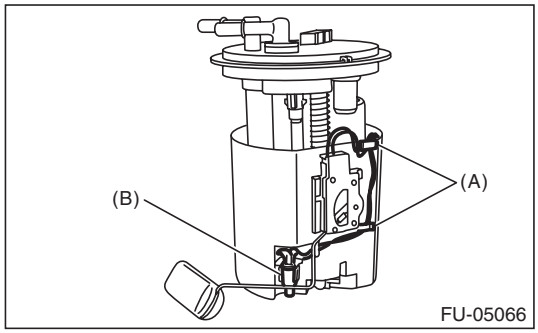

4) Press two claws (A) of the fuel level sensor, and slide the fuel level sensor in the direction of the arrow to remove the fuel level sensor.

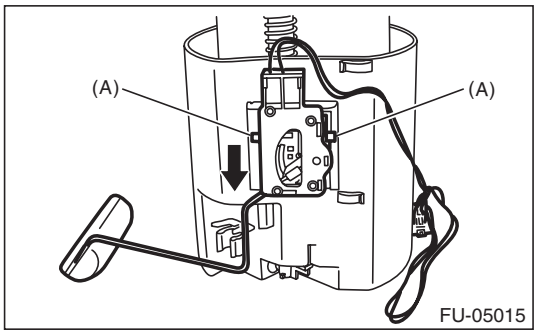

B: INSTALLATION

Install in the reverse order of removal.

C: INSPECTION

1) Check that the fuel level sensor has no damage.
2) Measure the fuel level sensor float position.

NOTE:
When inspecting the fuel level sensor, perform the work with the sensor installed to the fuel pump.

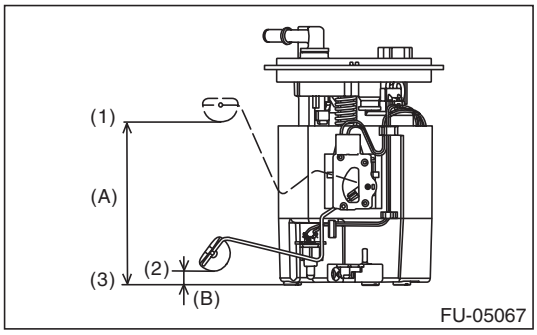

(1) FULL
(2) EMPTY
(3) Fuel tank seating surface

Float position	Standard
FULL to Fuel tank seating surface (A)	126.4±4 mm (4.976±0.157 in)
EMPTY to Fuel tank seating surface (B)	11.0±4 mm (0.433±0.157 in)

GETtheMANUALS.org

3) Measure the resistance between fuel level sensor terminals.

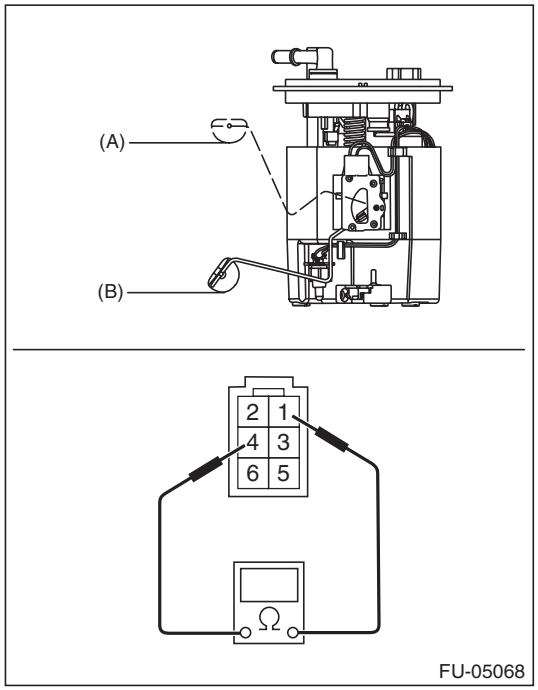

Float position	Terminal No.	Standard
FULL (A)	1 and 4	8.7±1.0 Ω
EMPTY (B)		139.1±2.0 Ω

GETtheMANUALS.org

27. Fuel Sub Level Sensor

A: REMOVAL

WARNING:
Place "NO OPEN FLAMES" signs near the working area.

CAUTION:
- **Be careful not to spill fuel.**
- **If the fuel gauge indicates that two thirds or more of the fuel is remaining, be sure to drain fuel before starting work to avoid the fuel to spill.**

1) Release the fuel pressure. <Ref. to FU(H6DO)-59, RELEASING OF FUEL PRESSURE, PROCEDURE, Fuel.>
2) Drain fuel. <Ref. to FU(H6DO)-59, DRAINING FUEL (WITH SUBARU SELECT MONITOR), PROCEDURE, Fuel.>
3) Disconnect the ground cable from battery.
4) Remove the rear seat cushion. <Ref. to SE-34, REMOVAL, Rear Seat.>
5) Remove the service hole cover.

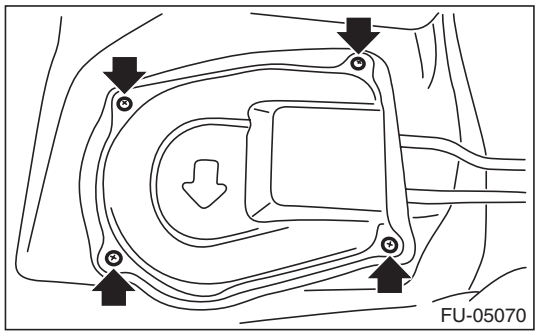

6) Disconnect the connector (A) from fuel sub level sensor, and remove the clip (B) securing the fuel cord from fuel sub level sensor protector.

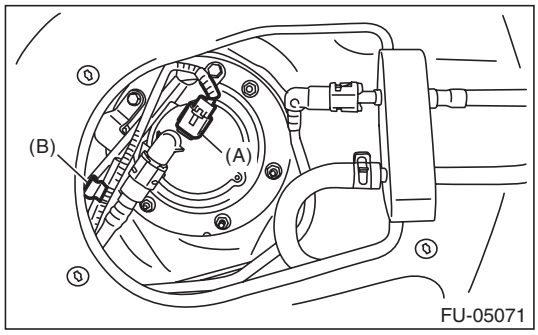

7) Remove the bolts (A) securing the fuel sub level sensor protector to the fuel sub level sensor upper plate, and remove the fuel sub level sensor protector.

8) Disconnect the quick connector on the fuel sub delivery tube (B). <Ref. to FU(H6DO)-80, REMOVAL, Fuel Delivery and Evaporation Lines.>

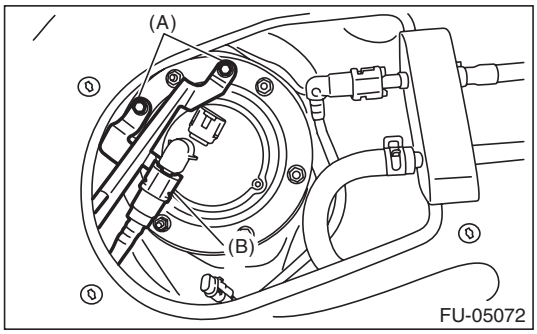

9) Remove the nuts securing the fuel sub level sensor upper plate to the fuel tank and remove the fuel sub level sensor upper plate.

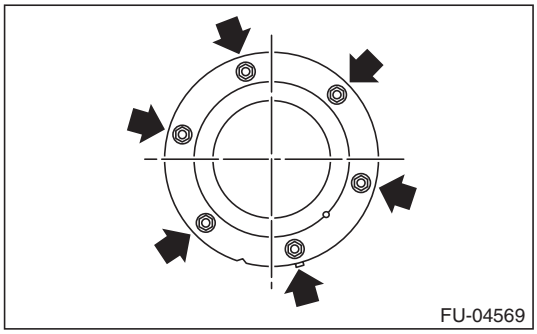

10) Remove the fuel sub level sensor from the fuel tank.

GETtheMANUALS.org

B: INSTALLATION

Install in the reverse order of removal while being careful of the following.

- Make sure the sealing portion is free from fuel or foreign matter before installation.
- Align protrusion (A) of the gasket to the position shown in the figure.
- Align protrusion (B) of the fuel sub level sensor to the cutout in the fuel sub level sensor upper plate.
- After tightening the bolts to the specified torque in the order indicated in the figure, install the fuel sub level sensor protector.

NOTE:
Use a new gasket.

Tightening torque:
4.4 N·m (0.4 kgf-m, 3.2 ft-lb)

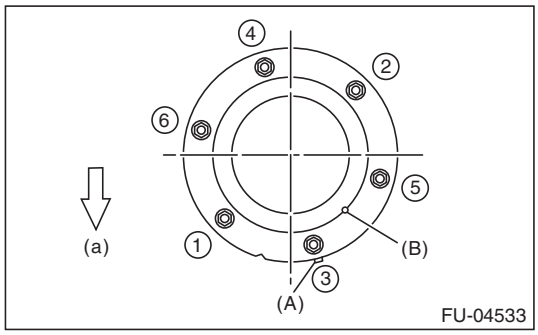

(a) Front side of vehicle

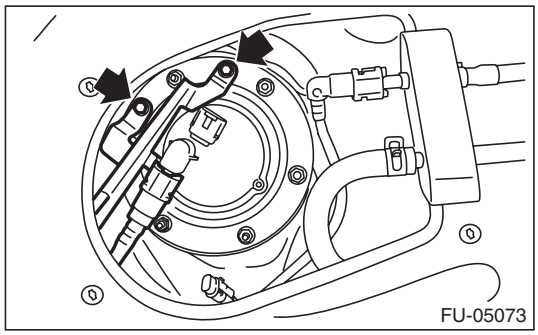

C: INSPECTION

1) Check that the fuel sub level sensor has no damage.
2) Measure the fuel sub level sensor float position.

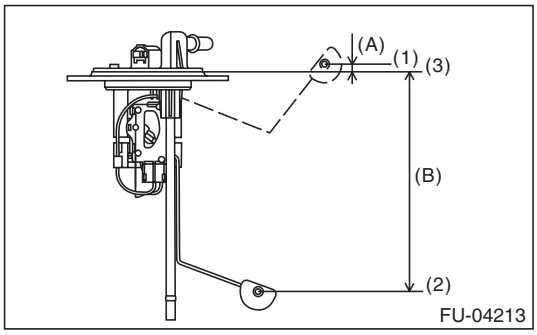

(1) FULL
(2) EMPTY
(3) Datum points

Float position	Standard
FULL to Datum point (A)	6.4±3.5 mm (0.252±0.138 in)
EMPTY to Datum point (B)	163.3±3.5 mm (6.429±0.138 in)

3) Measure the resistance between fuel sub level sensor terminals.

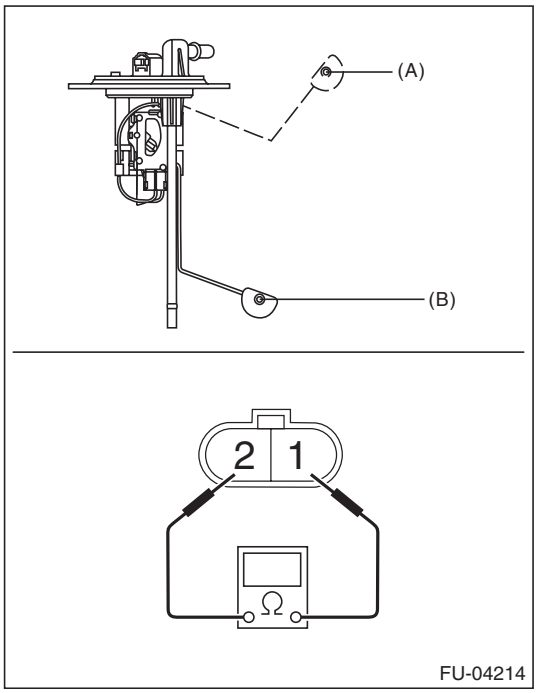

Float position	Terminal No.	Standard
FULL (A)	1 and 2	8.7±1.0 Ω
EMPTY (B)		270.9±4.0 Ω

GETtheMANUALS.org

28. Fuel Filter

A: REMOVAL

WARNING:
Place "NO OPEN FLAMES" signs near the working area.

CAUTION:
- **Be careful not to spill fuel.**
- **If the fuel gauge indicates that two thirds or more of the fuel is remaining, be sure to drain fuel before starting work to avoid the fuel to spill.**
- **Be careful not to drop or apply any impact to the fuel pump during work. This may deteriorate its performance.**

NOTE:
The fuel filter is built in fuel pump assembly.

1) Remove the fuel pump assembly. <Ref. to FU(H6DO)-71, REMOVAL, Fuel Pump.>
2) Remove the fuel level sensor and fuel temperature sensor. <Ref. to FU(H6DO)-73, REMOVAL, Fuel Level Sensor.>
3) Disconnect the connector from the fuel filter assembly.

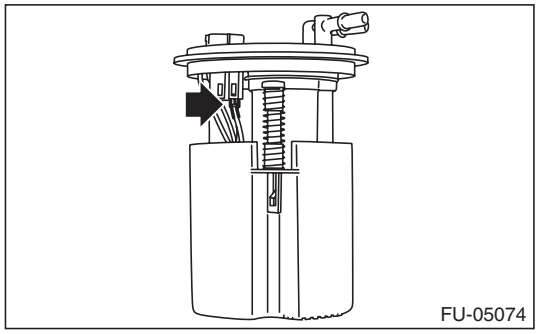
FU-05074

4) Disengage the claw connecting the fuel filter assembly and fuel chamber assembly, and separate fuel filter assembly and fuel chamber assembly.

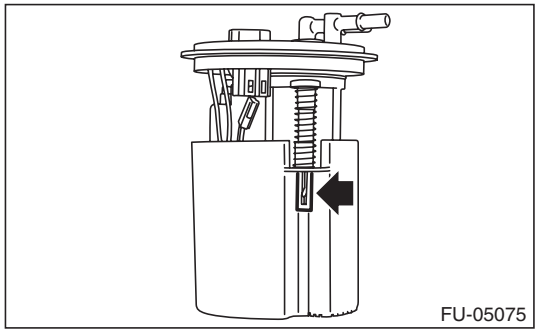
FU-05075

5) Remove the fuel pump holder from the fuel filter assembly.

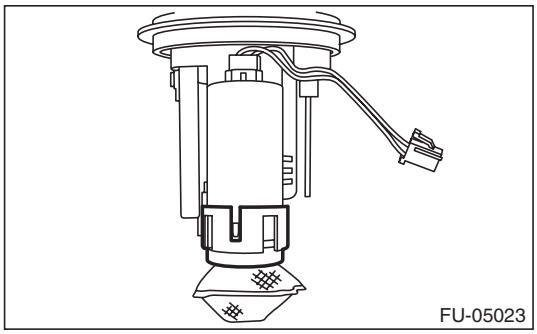
FU-05023

6) Remove the fuel pump from the fuel filter assembly.

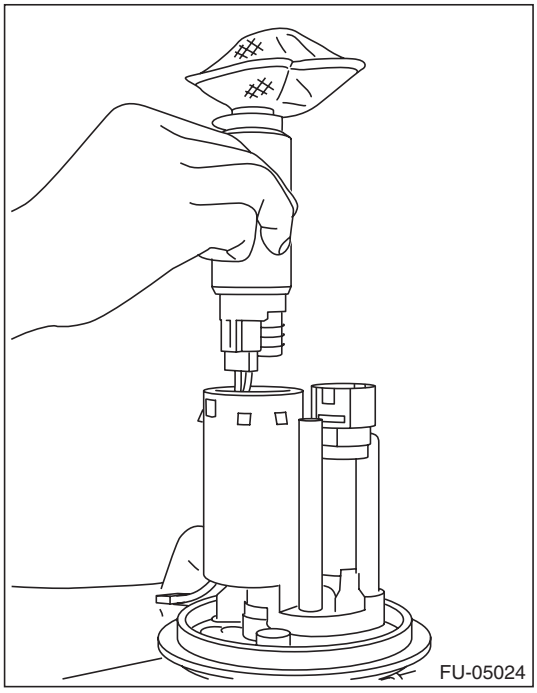
FU-05024

GETtheMANUALS.org

B: INSTALLATION

1) Assemble the gasket spacer (A) and support rubber cushion (B) to the fuel pump, and install the fuel pump to the fuel filter assembly.

NOTE:
- Use a new gasket spacer.
- Use a new support rubber cushion.
- Apply gasoline to the surface of gasket spacer and support rubber cushion.

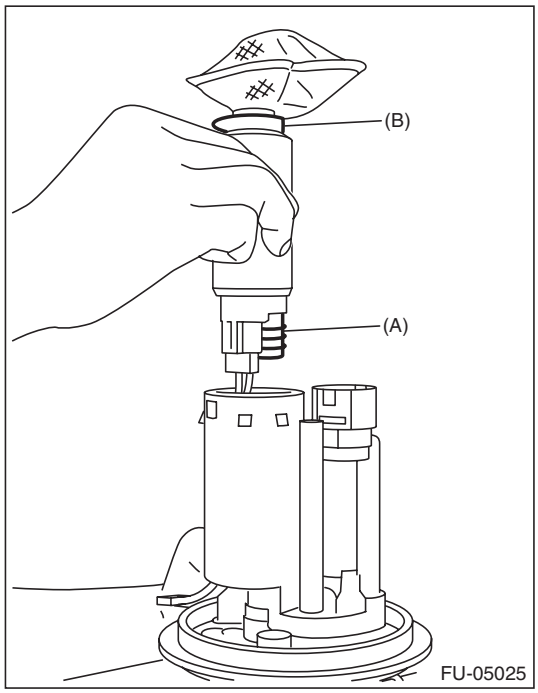

2) Install the fuel pump holder to the fuel filter assembly.

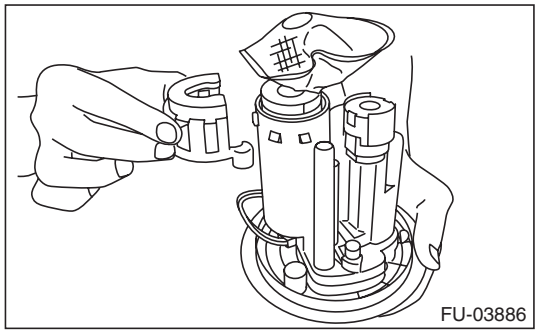

3) Install the pump module spring (A) to fuel filter assembly, and install the fuel chamber assembly (B).

NOTE:
- Use a new fuel chamber assembly.
- Check that the claw connecting the fuel filter assembly and fuel chamber assembly is securely fastened.

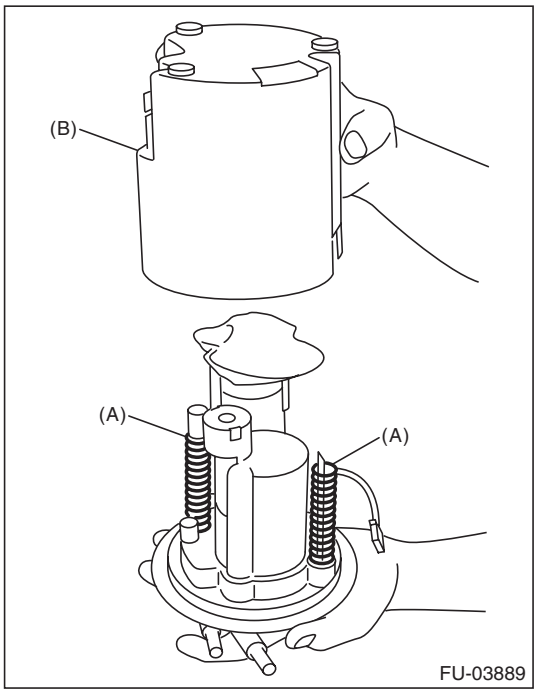

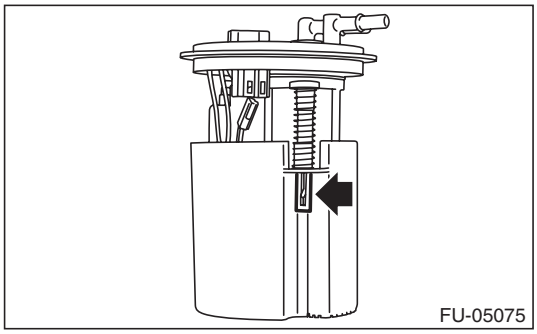

4) Connect the fuel pump connector.

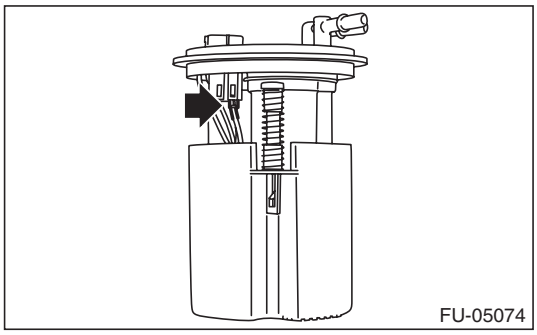

5) Install the fuel level sensor and fuel temperature sensor. <Ref. to FU(H6DO)-73, INSTALLATION, Fuel Level Sensor.>

6) Inspect the fuel level sensor. <Ref. to FU(H6DO)-73, INSPECTION, Fuel Level Sensor.>

7) Install the fuel pump assembly. <Ref. to FU(H6DO)-72, INSTALLATION, Fuel Pump.>

GETtheMANUALS.org

29. Fuel Damper

A: REMOVAL

WARNING:
Place "NO OPEN FLAMES" signs near the working area.

CAUTION:
- **Be careful not to spill fuel.**
- **Catch the fuel from hoses using a container or cloth.**

1) Release the fuel pressure. <Ref. to FU(H6DO)-59, RELEASING OF FUEL PRESSURE, PROCEDURE, Fuel.>
2) Disconnect the fuel delivery hose (A) from fuel damper and remove the fuel damper.

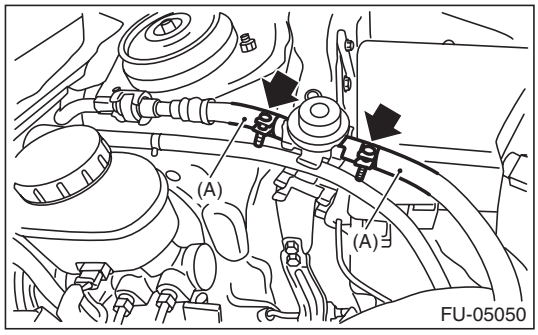

B: INSTALLATION

Install in the reverse order of removal.

NOTE:
If fuel hoses or clamps are damaged, replace them with new parts.

Tightening torque:
1.25 N·m (0.1 kgf-m, 0.9 ft-lb)

C: INSPECTION

1) Check that the fuel damper has no deformation, cracks or other damages.
2) Check the fuel delivery hose for cracks, damage or looseness.

GETtheMANUALS.org

30. Fuel Delivery and Evaporation Lines

A: REMOVAL

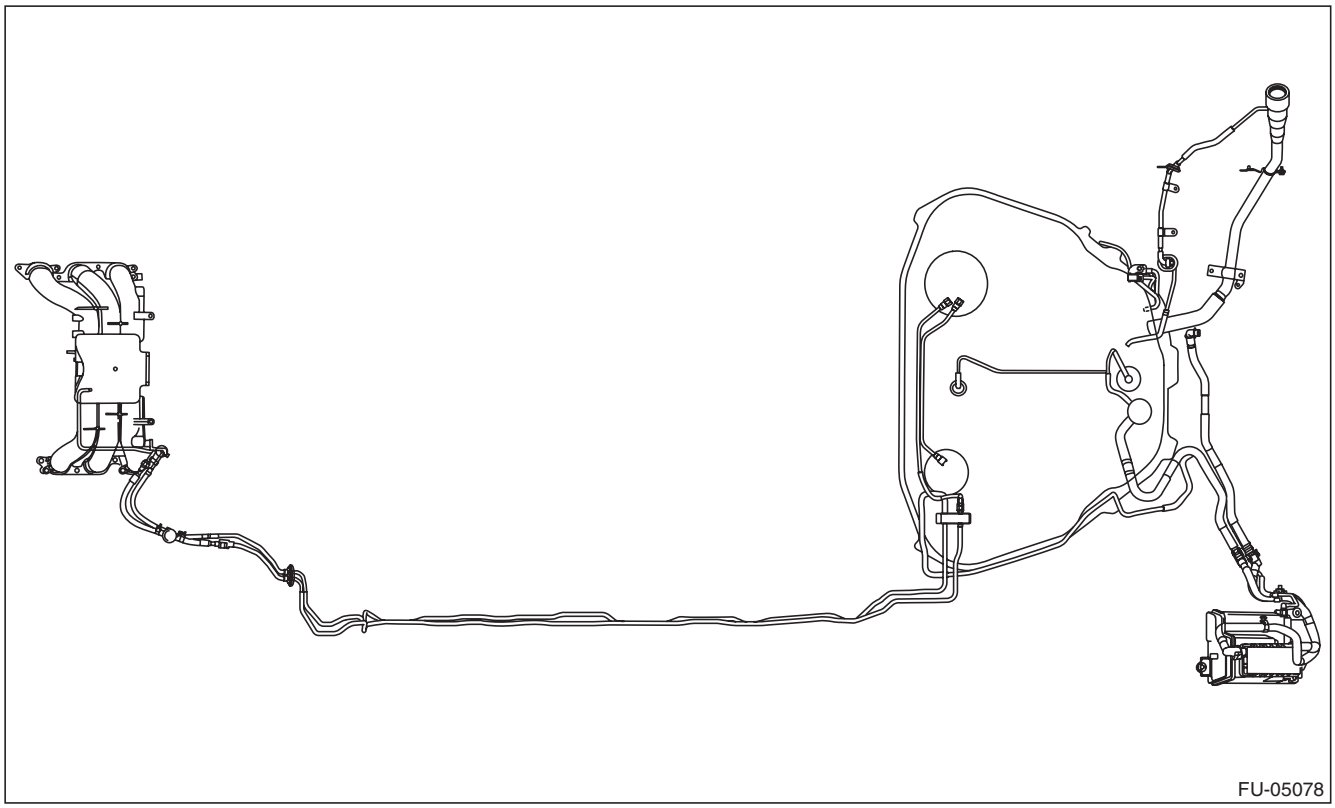

WARNING:
Place "NO OPEN FLAMES" signs near the working area.

CAUTION:
Be careful not to spill fuel.

1) Release the fuel pressure. <Ref. to FU(H6DO)-59, RELEASING OF FUEL PRESSURE, PROCEDURE, Fuel.>
2) Open the fuel filler lid and remove the fuel filler cap.
3) Remove the floor mat. <Ref. to EI-162, REMOVAL, Floor Mat.>
4) In the engine compartment, disconnect the fuel delivery hoses and evaporation hose.

CAUTION:
- **Be careful not to spill fuel.**
- **Catch the fuel from hoses using a container or cloth.**

(1) Remove the connect check cover from the fuel delivery hose.

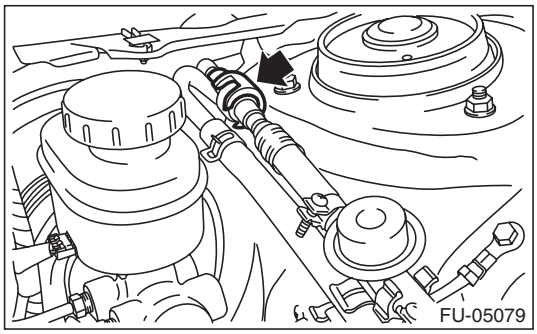

(2) Set the ST to the fuel pipe.

ST 42099AE000 QUICK CONNECTOR RELEASE

(3) Disconnect the quick connector of the fuel delivery hose by pushing the ST in the direction of the arrow.

GETtheMANUALS.org

(4) Remove the clip and disconnect the evaporation hose from the fuel pipe.

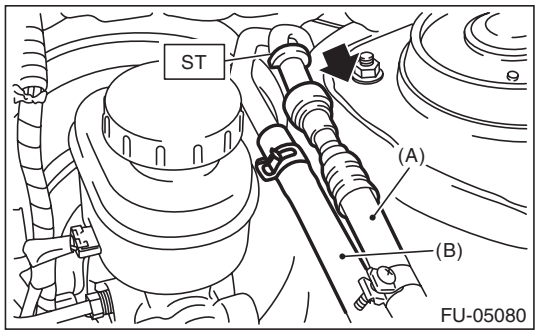

(A) Fuel delivery hose
(B) Evaporation hose

5) Remove the fuel tank. <Ref. to FU(H6DO)-61, REMOVAL, Fuel Tank.>
6) Remove the rear mud guard LH. <Ref. to EI-38, REMOVAL, Mud Guard.>
7) Remove the purge hose (A), purge pipe (B), vent hose (C) and drain tube assembly (D).

NOTE:
Disconnect the quick connector as shown in the figure.

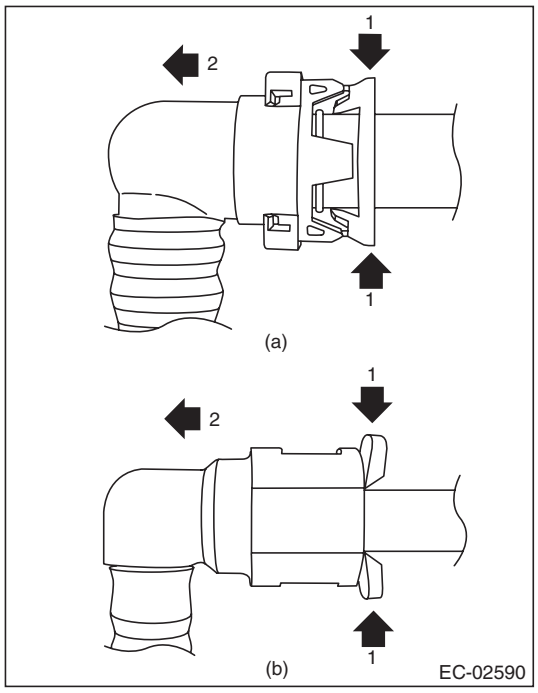

(a) Vent hose (C) and drain tube ASSY (D)
(b) Purge pipe (B)

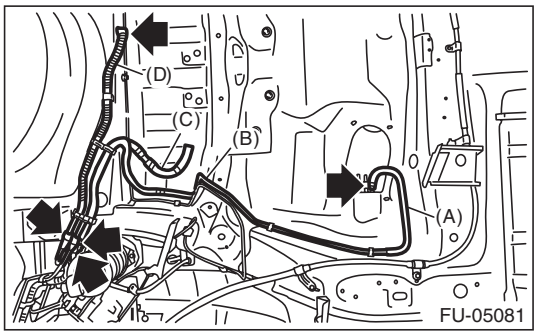

8) Remove the fuel pipe assembly from vehicle.
9) Disconnect the quick connector, and remove the fuel delivery tube and fuel sub delivery tube from the fuel tank.

- When using ST

1. Attach ST to the pipe and push ST in the direction of arrow mark to disconnect the quick connector.

ST	42099AE000	QUICK CONNECTOR RELEASE

CAUTION:
- **Be careful not to spill fuel.**
- **Catch the fuel from hoses using a container or cloth.**
- **To disconnect the connector, hold (C) shown in the figure and pull in axial direction.**
- **If the connector and pipe are sticking to each other, push and pull the connector with ST pushed, and then pull the connector after it starts moving freely.**
- **When disconnecting the connector, do not bend or twist the tube forcibly. If the tube is bent, replace with a new part.**

NOTE:
Clean the pipe and quick connector, if they are covered with dust.

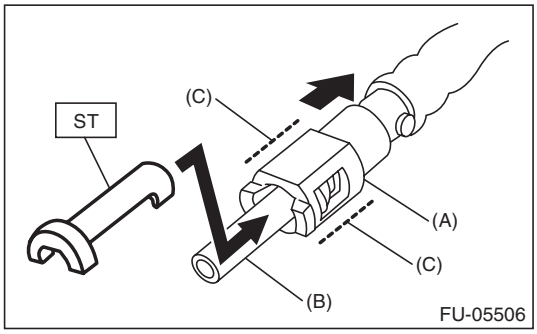

(A) Quick connector
(B) Pipe
(C) Connector holding position

2. To prevent from damaging or entering foreign matter, wrap the pipes and quick connectors with plastic bag etc.

GETtheMANUALS.org

CAUTION:
When reusing the retainer, do not disconnect the retainer from the connector.

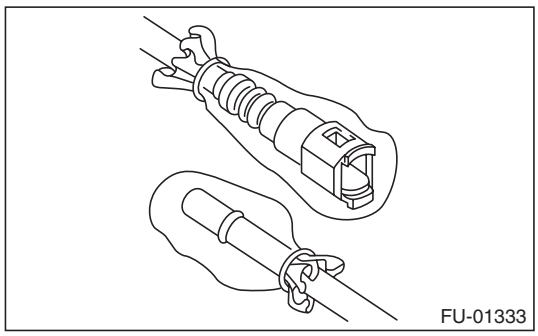

- When not using ST

1. Push the retainer in the direction of the arrow, disconnect the quick connector from pipe.

CAUTION:
- **Be careful not to spill fuel.**
- **Catch the fuel from hoses using a container or cloth.**
- **To disconnect the connector, hold (D) shown in the figure and pull in axial direction.**
- **If the connector and pipe are sticking to each other, push and pull the connector with the retainer pushed in the direction of the arrow, and then pull the connector after it starts moving freely.**
- **When disconnecting the connector, do not bend or twist the tube forcibly. If the tube is bent, replace with a new part.**

NOTE:
Clean the pipe and quick connector, if they are covered with dust.

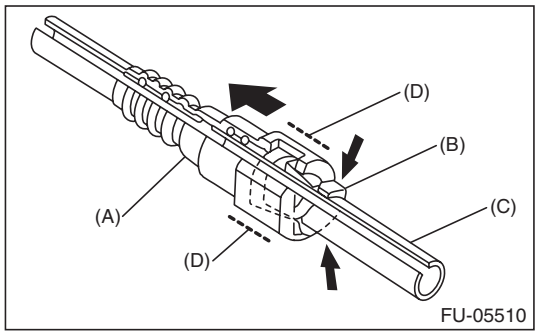

(A) Quick connector
(B) Retainer
(C) Pipe
(D) Connector holding position

2. To prevent from damaging or entering foreign matter, wrap the pipes and quick connectors with plastic bag etc.

CAUTION:
When reusing the retainer, do not disconnect the retainer from the pipe.

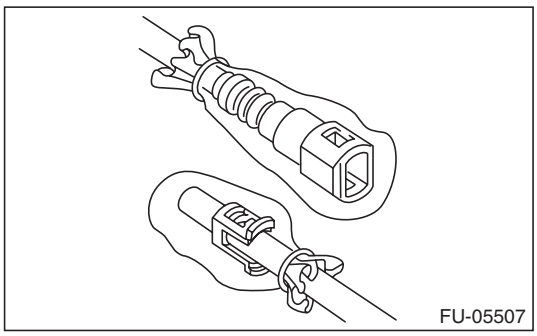

10) Remove the evaporation pipe.
(1) Remove the rear mud guard RH. <Ref. to EI-38, REMOVAL, Mud Guard.>
(2) Remove the evaporation hose.

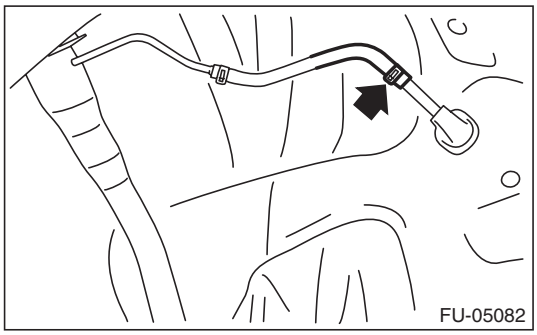

(3) Remove the trunk side trim panel assembly - side on the RH side. <Ref. to EI-110, REMOVAL, Rear Quarter Trim.>
(4) Remove the evaporation pipe protector.

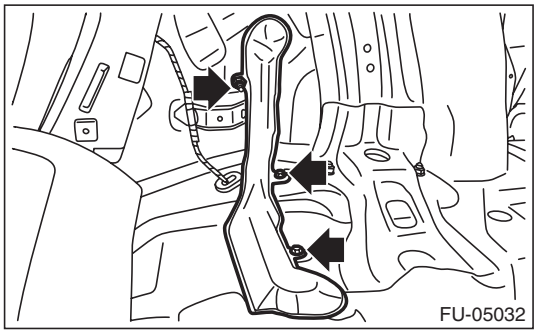

(5) Remove the evaporation pipe from vehicle.

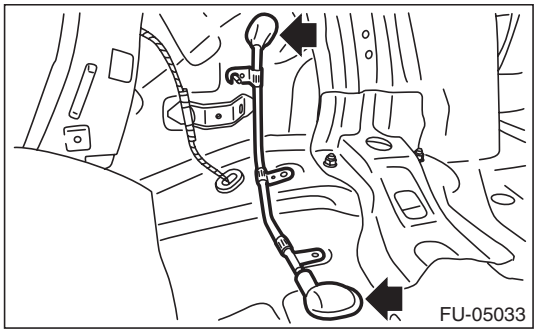

GETtheMANUALS.org

B: INSTALLATION

Install in the reverse order of removal while being careful of the following.

1. INSTALLATION OF EVAPORATION PIPE

1) Install the evaporation pipe to the vehicle.

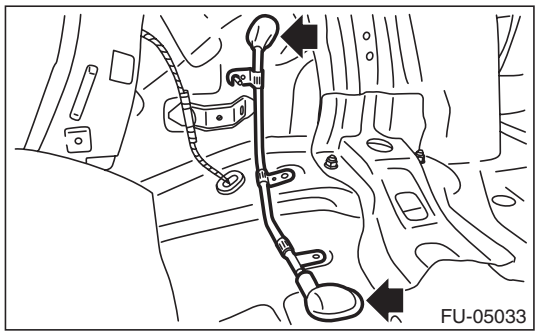

2) Install the evaporation pipe protector.

Tightening torque:
T1: 1 N·m (0.1 kgf-m, 0.7 ft-lb)
T2: 7.5 N·m (0.7 kgf-m, 5.4 ft-lb)

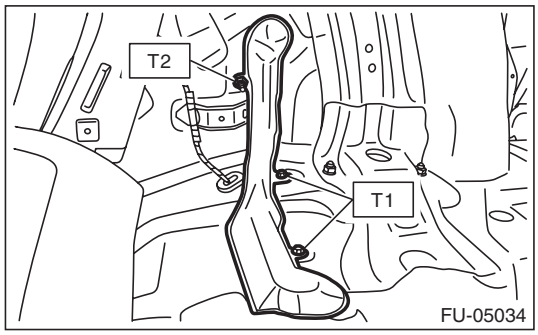

3) Install the trunk side trim panel assembly - side on RH side. <Ref. to EI-119, INSTALLATION, Rear Quarter Trim.>

4) Install the evaporation hose.

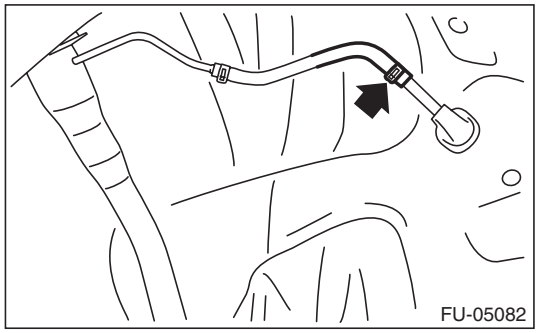

5) Install the rear mud guard RH. <Ref. to EI-38, INSTALLATION, Mud Guard.>

2. CONNECTING THE FUEL LINE QUICK CONNECTOR

CAUTION:
• Make sure there are no damage or dust on connections. If necessary, clean seal surface of pipe.

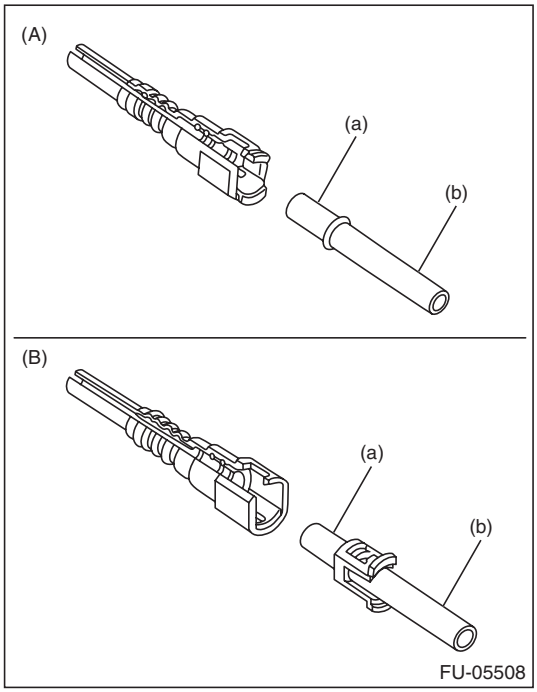

(A) When removed using ST
(B) When removed without using ST
(a) Seal surface
(b) Pipe

• When reusing the retainer, make sure that neither scratches nor deformation exist on the retainer. If it is faulty, use a new part.

1) Connect the quick connector to pipe.

CAUTION:
• Make sure that the quick connector is securely connected.

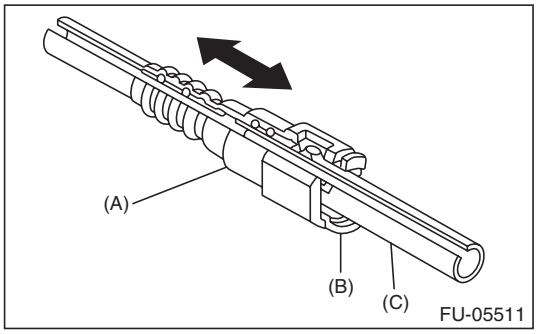

(A) Quick connector
(B) Retainer
(C) Pipe

GETtheMANUALS.org

• Make sure the two retainer pawls are engaged in their mating positions in the quick connector.
• Be sure to inspect tubes and their connections for any leakage of fuel.
• To connect the connector, hold (d) shown in the figure and push in axial direction.
• When connecting the connector, do not bend or twist the tube forcibly. If the tube is bent, replace with a new part.

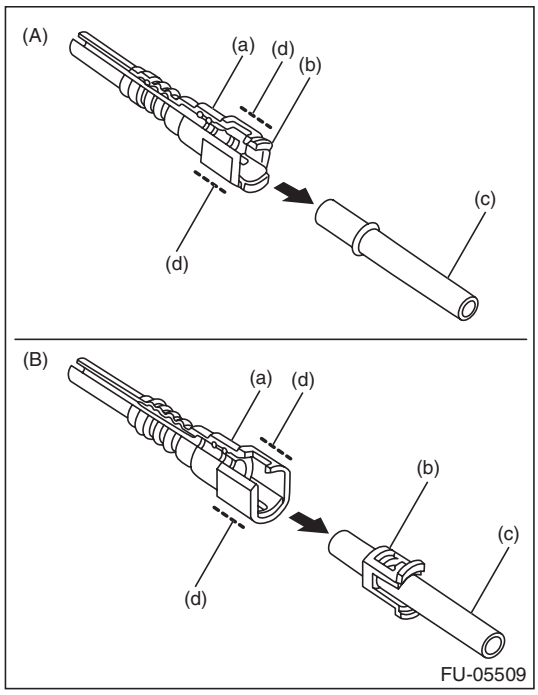

(A) When removed using ST
(B) When removed without using ST
(a) Quick connector
(b) Retainer
(c) Pipe
(d) Connector holding position

3. CONNECTING THE FUEL DELIVERY HOSE AND FUEL HOSE

Connect the fuel delivery hose as shown in the figure.

CAUTION:
• If the connection portion has a spool or stopper, do not allow the end of the hose to bend or ride over by inserting the hose too deep.
• Be sure to inspect hoses and their connections for any leakage of fuel.

NOTE:
Use new fuel delivery hose and fuel hose.

Tightening torque:
1.25 N·m (0.1 kgf-m, 0.9 ft-lb)

L1: 2.5±1.5 mm (0.098±0.059 in)

L2: 22.5±2.5 mm (0.886±0.098 in)

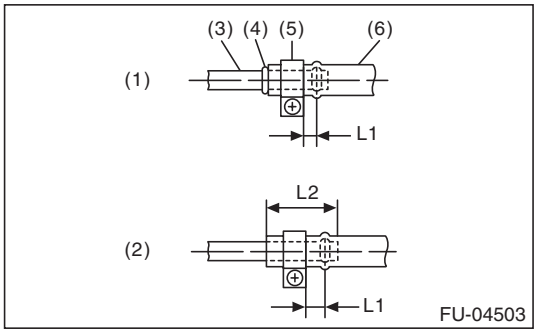

(1) When there is a spool or bump
(2) When there is no spool or bump
(3) Pipe
(4) Spool or bump
(5) Clamp
(6) Hose

4. EVAPORATION HOSE CONNECTION

Connect the evaporation hose to the pipe with an overlap of 15 to 20 mm (0.59 to 0.79 in).

L = 17.5±2.5 mm (0.689±0.098 in)

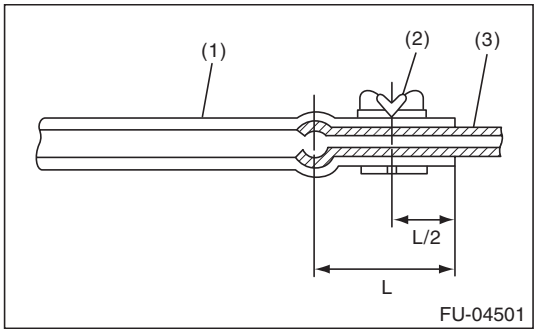

(1) Hose
(2) Clip
(3) Pipe

GETtheMANUALS.org

5. CONNECTING THE EVAPORATION LINE QUICK CONNECTOR

CAUTION:
- **Make sure there are no damage or dust on connections. If necessary, clean the seal surface of the pipe.**
- **Make sure that the quick connector is securely connected.**

Connect the quick connector as shown in the figure.

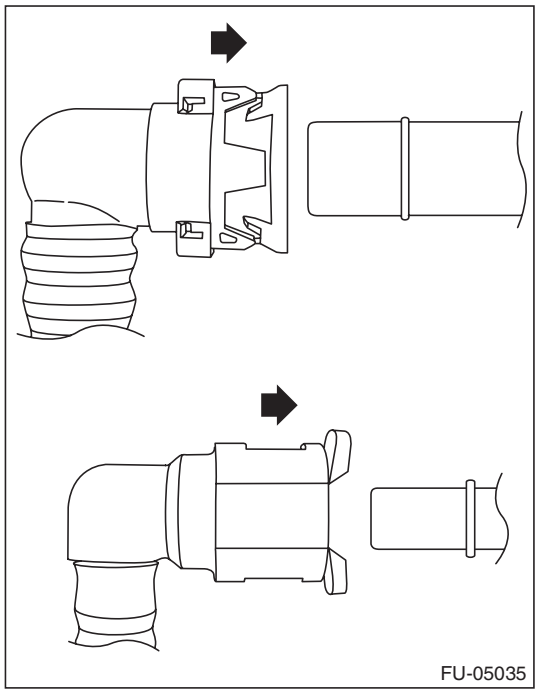

C: INSPECTION

1) Check that the fuel pipe has no deformation, cracks or other damages.
2) Check that the hose and tube have no cracks, damage or loose part.

GETtheMANUALS.org

31. Fuel System Trouble in General

A: INSPECTION

Trouble	Possible cause	Corrective action
Insufficient fuel supply to injector	a. Fuel pump does not operate.	
	❍ Defective terminal contact	Inspect contact, especially ground, and tighten it securely.
	❍ Trouble in electromagnetic or electronic circuit parts	Replace the faulty parts.
	b. Decline of fuel pump function	Replace the fuel pump.
	c. Clogged fuel filter	Replace the fuel filter. Clean or replace the fuel tank if necessary.
	d. Clogged or bent pipe, hose or tube of fuel line	Clean, correct or replace the pipe, hose or tube of the fuel line.
	e. Air is mixed in fuel system.	Check the fuel line connections, and repair or replace the defective part.
	f. Damaged diaphragm of pressure regulator	Replace the pressure regulator.
Leakage or run-out of fuel	a. Loose connection in pipe, hose or tube of fuel line	Check the fuel line connections, and repair or replace the defective part.
	b. Cracks in pipe, hose or tube of fuel line	Replace the pipe, hose or tube of the fuel line.
	c. Cracks or defective welded part of fuel tank	Replace the fuel tank.
	d. Clogged or bent pipe, hose or tube of fuel line	Clean, correct or replace the pipe, hose or tube of the fuel line.
Gasoline smell inside of compartment	a. Loose connection in pipe, hose or tube of fuel line	Check the fuel line connections, and repair or replace the defective part.
	b. Improper installation of rubber saucer	Correct or replace the rubber saucer.
	c. Defective canister	Replace the canister.
Defective fuel gauge	a. Defective operation of fuel level sensor	Replace the fuel level sensor.
	b. Defective operation of combination meter	Replace the combination meter.
Noise	a. Big operation noise or vibration from fuel pump	Replace the fuel pump.

NOTE:
- When the vehicle is left unattended for an extended period of time, water may accumulate in the fuel tank. Fill fuel fully to prevent the problem.
- In snow-covered areas, mountainous areas, skiing areas, etc. where ambient temperatures drop to 0°C (32°F) or less throughout the winter season, use a water removing agent in the fuel system to prevent freezing fuel system and accumulating water.
- When water is accumulated in fuel filter, fill the water removing agent in the fuel tank.
- Before using water removing agent, follow the cautions noted on the bottle.

GETtheMANUALS.org

EMISSION CONTROL (AUX. EMISSION CONTROL DEVICES)

EC(H6DO)

Page

1. General Description 2
2. Front Catalytic Converter 3
3. Rear Catalytic Converter 4
4. EGR Valve 5
5. Canister 6
6. Purge Control Solenoid Valve 10
7. Fuel Level Sensor 12
8. Fuel Temperature Sensor 13
9. Fuel Sub Level Sensor 14
10. Fuel Tank Pressure Sensor 15
11. Drain Filter 17
12. Drain Valve 18
13. PCV Valve 19

GETtheMANUALS.org

1. General Description

A: CAUTION

- Wear appropriate work clothing, including a cap, protective goggles and protective shoes when performing any work.
- Remove contamination including dirt and corrosion before removal, installation or disassembly.
- Keep the disassembled parts in order and protect them from dust and dirt.
- Before removal, installation or disassembly, be sure to clarify the failure. Avoid unnecessary removal, installation, disassembly and replacement.
- Vehicle components are extremely hot after driving. Be wary of receiving burns from heated parts.
- Be sure to tighten fasteners including bolts and nuts to the specified torque.
- Place shop jacks or rigid racks at the specified points.
- Before disconnecting connectors of sensors or units, be sure to disconnect the ground cable from battery.

B: PREPARATION TOOL

1. GENERAL TOOL

TOOL NAME	REMARKS
Circuit tester	Used for measuring resistance.
Mighty Vac	Used for inspecting the fuel tank pressure sensor.

GETtheMANUALS.org

2. Front Catalytic Converter

A: REMOVAL

The front and rear catalytic converters are integrated into the front exhaust pipe; therefore, refer to “Front Exhaust Pipe” for the removal procedure. <Ref. to EX(H6DO)-5, REMOVAL, Front Exhaust Pipe.>

B: INSTALLATION

The front and rear catalytic converters are integrated into front exhaust pipe as one unit; therefore, refer to “Front Exhaust Pipe” for installation procedure. <Ref. to EX(H6DO)-6, INSTALLATION, Front Exhaust Pipe.>

C: INSPECTION

1) Check the connections and welds for exhaust leaks.
2) Check for hole or rust.

GETtheMANUALS.org

3. Rear Catalytic Converter

A: REMOVAL

The front and rear catalytic converters are integrated into the front exhaust pipe; therefore, refer to “Front Exhaust Pipe” for the removal procedure. <Ref. to EX(H6DO)-5, REMOVAL, Front Exhaust Pipe.>

B: INSTALLATION

The front and rear catalytic converters are integrated into front exhaust pipe as one unit; therefore, refer to “Front Exhaust Pipe” for installation procedure. <Ref. to EX(H6DO)-6, INSTALLATION, Front Exhaust Pipe.>

C: INSPECTION

1) Check the connections and welds for exhaust leaks.
2) Check for hole or rust.

GETtheMANUALS.org

4. EGR Valve

A: REMOVAL

For removal procedure, refer to “FU(H6DO)” section. <Ref. to FU(H6DO)-42, REMOVAL, EGR Valve.>

B: INSTALLATION

For installation procedure, refer to “FU(H6DO)” section. <Ref. to FU(H6DO)-43, INSTALLATION, EGR Valve.>

C: INSPECTION

For inspection procedures, refer to the “FU(H6DO)” section. <Ref. to FU(H6DO)-43, INSPECTION, EGR Valve.>

GETtheMANUALS.org

5. Canister

A: REMOVAL

1) Remove the rear wheel LH.
2) Lift up the vehicle.
3) Remove the rear mud guard LH. <Ref. to EI-38, REMOVAL, Mud Guard.>
4) Disconnect the quick connectors of the vent tube (A), canister drain tube (B) and charge tube (C), and remove the tubes from clips (D).

NOTE:
Disconnect the quick connector as shown in the figure.

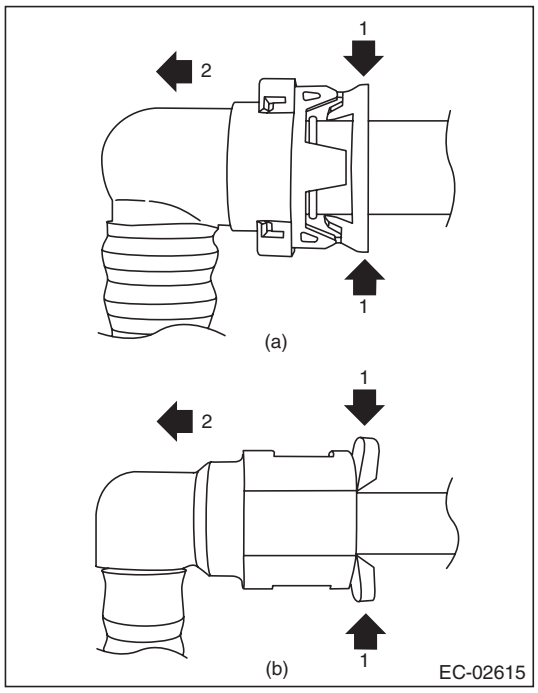

(a) Vent tube (A) and canister drain tube (B)
(b) Charge tube (C)

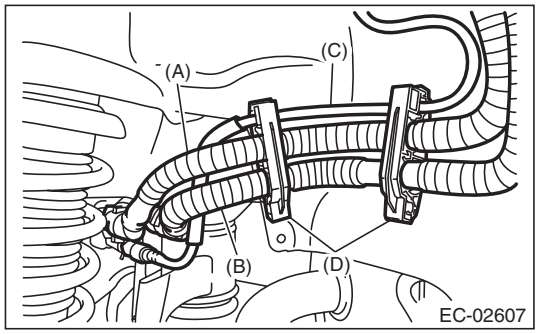

5) Remove the clip holding the rear wiring harness.

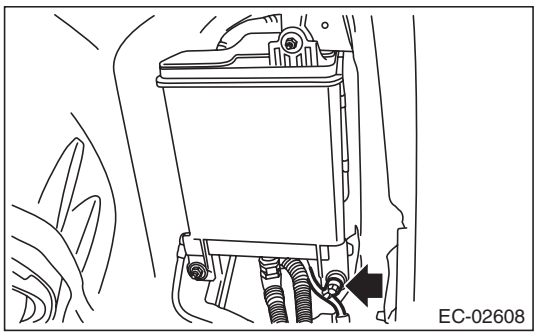

6) Remove the canister from vehicle.

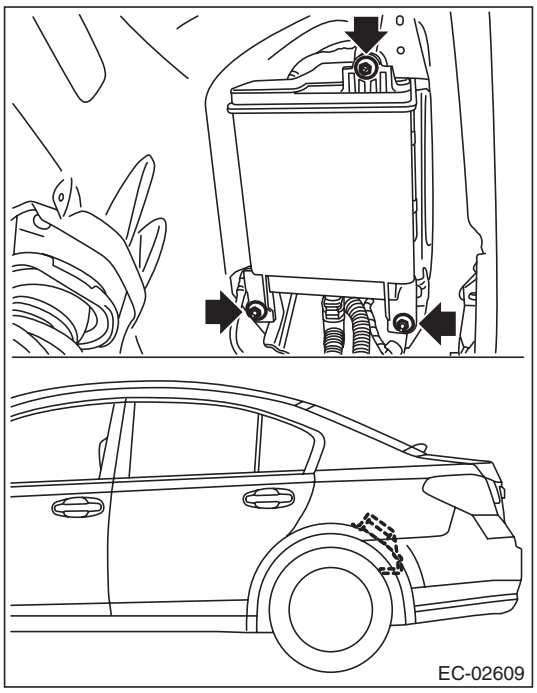

7) Disconnect the connector from drain valve.

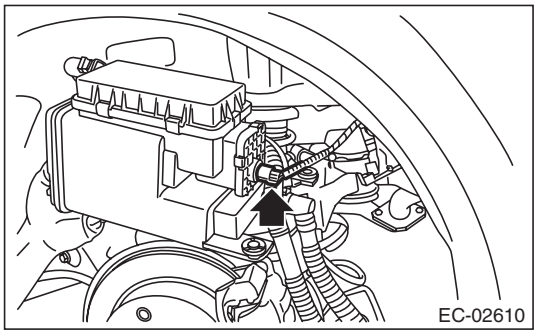

GETtheMANUALS.org

8) Disconnect the vent tube (A), canister drain tube (B) and charge tube (C), and remove the canister drain tube (B) from clip (D).

NOTE:
Disconnect the quick connector as shown in the figure.

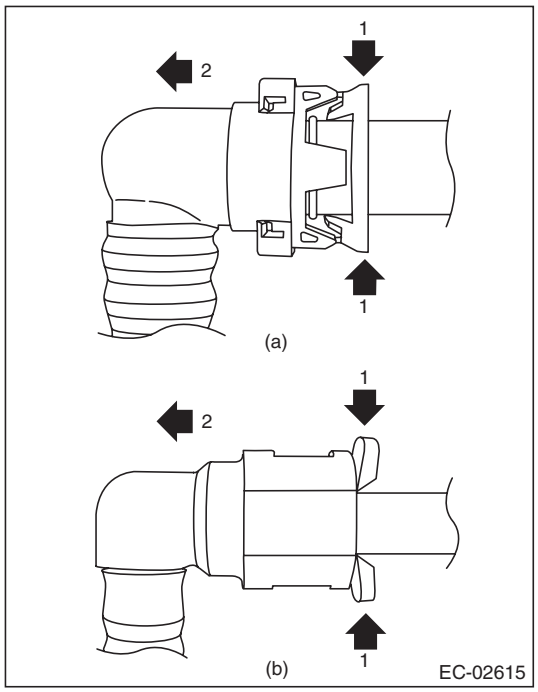

(a) Vent tube (A) and canister drain tube (B)
(b) Charge tube (C)

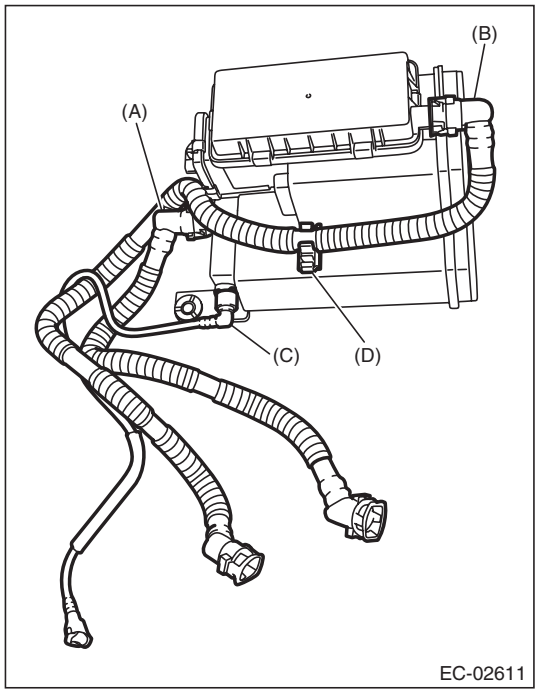

B: INSTALLATION

1) Install the vent tube (A), canister drain tube (B) and charge tube (C), and install the canister drain tube (B) to clip (D).

CAUTION:
- **Make sure there are no damage or dust on connections. If necessary, clean the seal surface of the pipe.**
- **Make sure that the quick connector is securely connected.**

NOTE:
Connect the quick connector as shown in the figure.

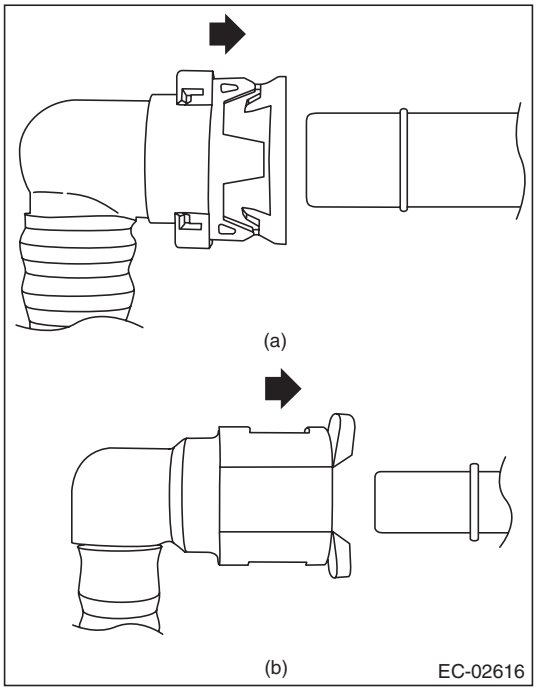

(a) Vent tube (A) and canister drain tube (B)
(b) Charge tube (C)

GETtheMANUALS.org

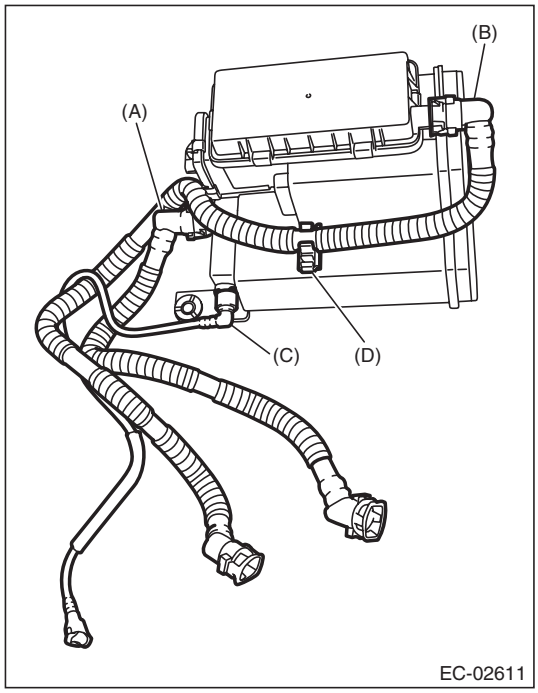

2) Connect the connector to the drain valve.

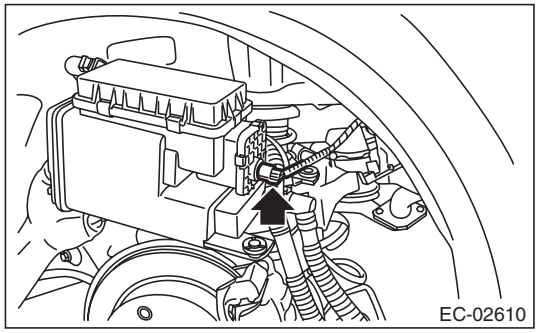

3) Install the canister to the vehicle.

Tightening torque:
8 N·m (0.8 kgf-m, 5.9 ft-lb)

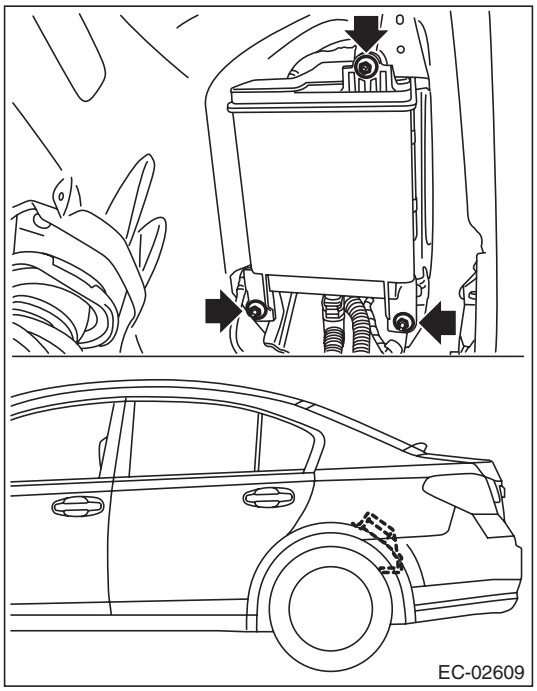

4) Secure the rear wiring harness with clip.

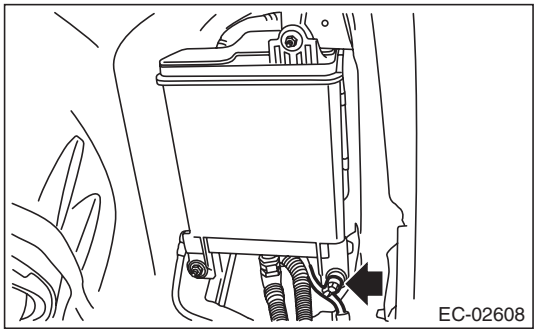

GETtheMANUALS.org

5) Attach all tubes to clips (D), and connect the quick connectors of the vent tube (A), canister drain tube (B) and charge tube (C).

CAUTION:
- **Make sure there are no damage or dust on connections. If necessary, clean the seal surface of the pipe.**
- **Make sure that the quick connector is securely connected.**

NOTE:
Connect the quick connector as shown in the figure.

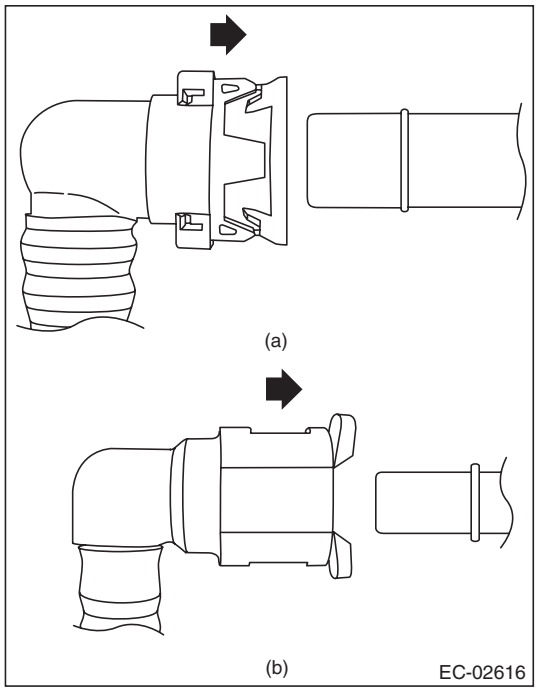

(a) Vent tube (A) and canister drain tube (B)
(b) Charge tube (C)

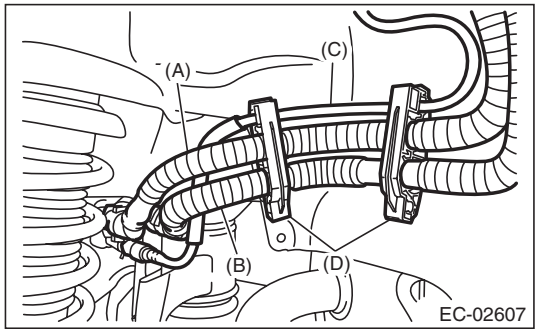

6) Install the rear mud guard LH. <Ref. to EI-38, INSTALLATION, Mud Guard.>
7) Lower the vehicle.
8) Install the rear wheel LH.

Tightening torque:
120 N·m (12.2 kgf-m, 88.5 ft-lb)

C: INSPECTION

1) Check that the canister has no deformation, cracks or other damages.
2) Check that the tube has no cracks, damage or loose part.

GETthemANUALS.org

6. Purge Control Solenoid Valve

A: REMOVAL

1) Remove the collector cover.

NOTE:
Follow the steps below when removing the collector cover.
(1) Pull up the two points at the rear (A).
(2) Pull up the two points at the front (B) while moving them forward.

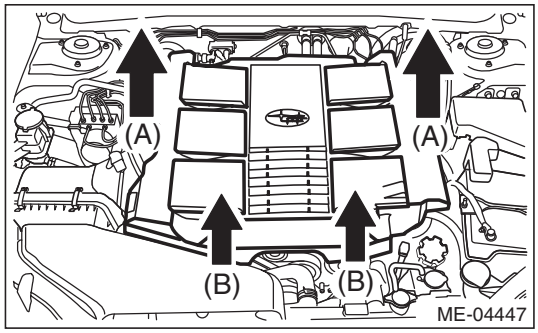

2) Disconnect the ground cable from battery.
3) Loosen the clamp (A) which connects the air intake boot assembly.
4) Loosen the bolt (B) which secures the air intake boot assembly to the collector cover bracket.

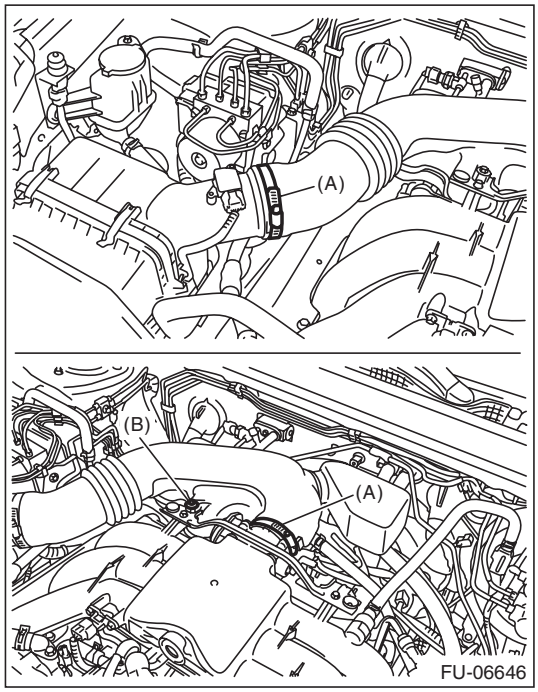

5) Remove the air intake boot assembly, and move it to the left side wheel apron.

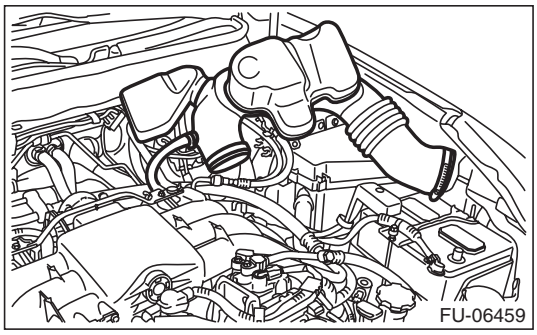

6) Disconnect the connector and hoses of purge control solenoid valve, and then remove the purge control solenoid valve.

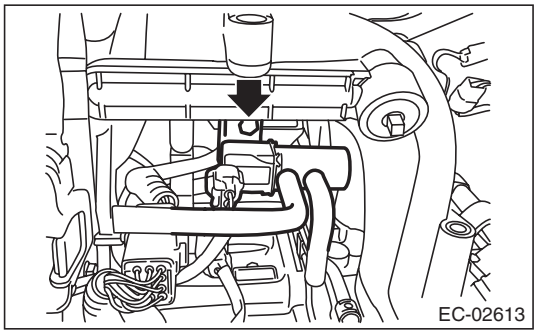

B: INSTALLATION

Install in the reverse order of removal.

Tightening torque:
19 N·m (1.9 kgf-m, 14.0 ft-lb)

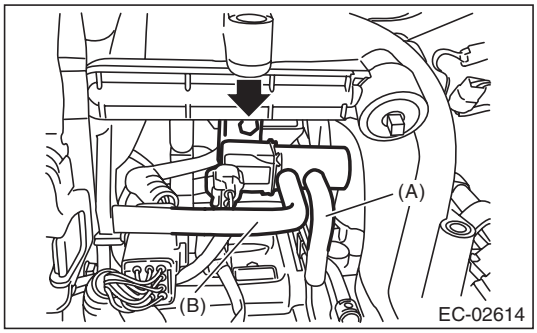

(A) To fuel pipe (evaporation line)
(B) To intake manifold

GETtheMANUALS.org

Tightening torque:
Clamp (A)
3 N·m (0.3 kgf-m, 2.2 ft-lb)
Bolt (B)
6.5 N·m (0.7 kgf-m, 4.8 ft-lb)

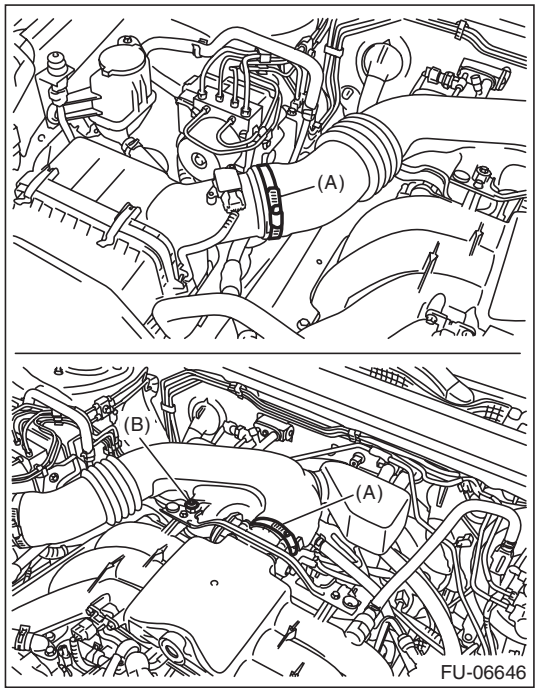

C: INSPECTION

1. PURGE CONTROL SOLENOID VALVE

1) Check that the purge control solenoid valve has no deformation, cracks or other damages.
2) Measure the resistance between the purge control solenoid valve terminals.

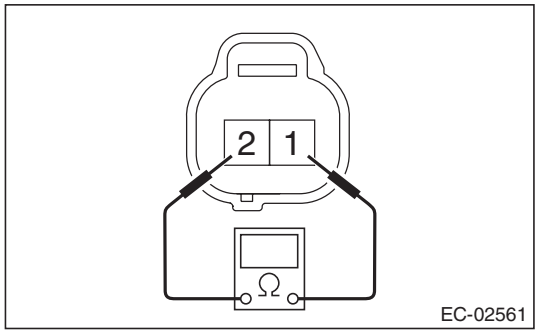

	Terminal No.	Standard
Purge control solenoid valve	1 and 2	32±3 Ω (when 20°C (68°F))

3) Check that air does not come out from (B) when air is blown into (A).

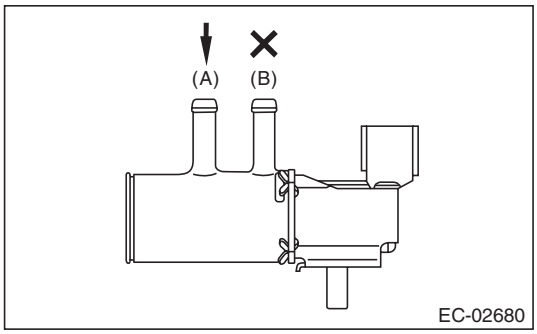

4) Connect the battery positive terminal to the terminal No. 1 and the battery negative terminal to the terminal No. 2. Check that air is discharged from (B), when supplying air to (A).

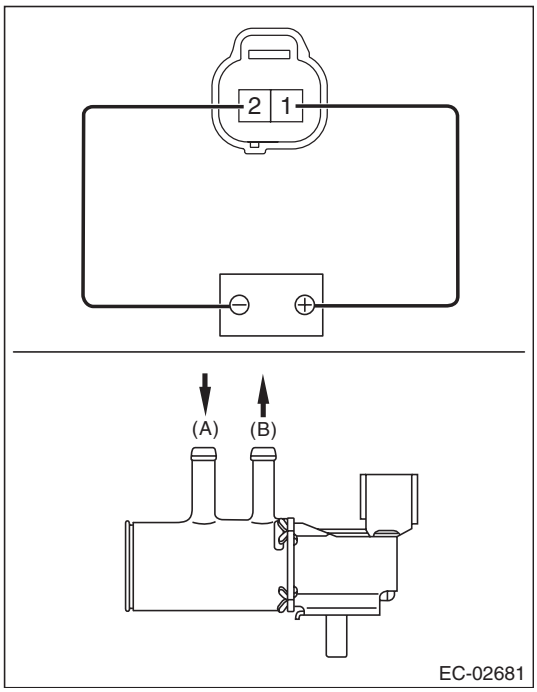

2. OTHER INSPECTIONS

Check that the evaporation hose has no cracks, damage or loose part.

GETtheMANUALS.org

7. Fuel Level Sensor

A: REMOVAL

For removal procedure, refer to “FU(H6DO)” section. <Ref. to FU(H6DO)-73, REMOVAL, Fuel Level Sensor.>

B: INSTALLATION

For installation procedure, refer to “FU(H6DO)” section. <Ref. to FU(H6DO)-73, INSTALLATION, Fuel Level Sensor.>

C: INSPECTION

For inspection procedures, refer to the “FU(H6DO)” section. <Ref. to FU(H6DO)-73, INSPECTION, Fuel Level Sensor.>

GETthemanuals.org

8. Fuel Temperature Sensor

A: REMOVAL

Fuel temperature sensor is integrated with the fuel level sensor. Refer to “Fuel Level Sensor” for removal procedure. <Ref. to FU(H6DO)-73, REMOVAL, Fuel Level Sensor.>

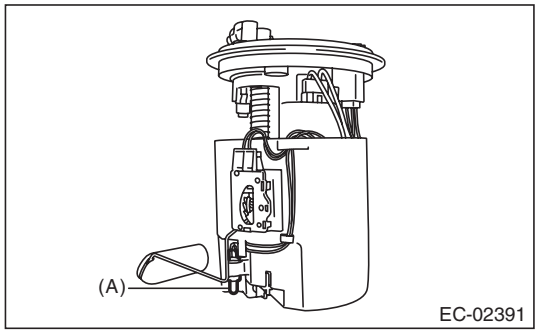

(A) Fuel temperature sensor

B: INSTALLATION

Refer to “Fuel Level Sensor” for the installation procedure. <Ref. to FU(H6DO)-73, INSTALLATION, Fuel Level Sensor.>

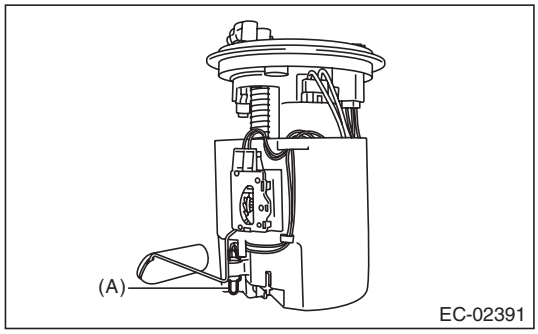

(A) Fuel temperature sensor

C: INSPECTION

1) Check that the fuel temperature sensor has no deformation, cracks or other damages.
2) Check the resistance between the fuel temperature sensor terminals.

CAUTION:
When measuring the resistance, check the circuit tester specification and be careful not to turn on electricity 3 V or more to prevent damaging the fuel temperature sensor.

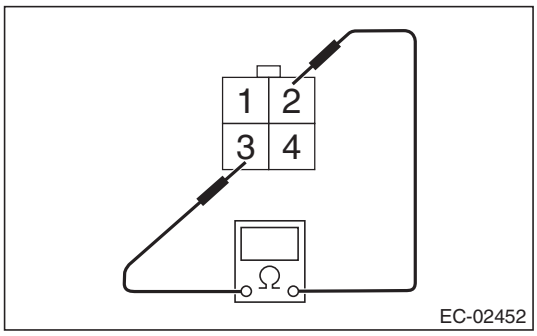

Temperature	Terminal No.	Standard
–10°C (14°F)	2 and 3	9.2±2.2 kΩ (when the measured current is 0.5 mA)
20°C (68°F)		2.5±0.2 kΩ (when the measured current is 1.0 mA)
50°C (122°F)		$0.84^{+0.06}_{-0.05}$ kΩ (when the measured current is 1.0 mA)

GETtheMANUALS.org

9. Fuel Sub Level Sensor

A: REMOVAL

For removal procedure, refer to “FU(H6DO)” section. <Ref. to FU(H6DO)-75, REMOVAL, Fuel Sub Level Sensor.>

B: INSTALLATION

For installation procedure, refer to “FU(H6DO)” section. <Ref. to FU(H6DO)-76, INSTALLATION, Fuel Sub Level Sensor.>

C: INSPECTION

For inspection procedures, refer to the “FU(H6DO)” section. <Ref. to FU(H6DO)-76, INSPECTION, Fuel Sub Level Sensor.>

GETthemanuals.org

10. Fuel Tank Pressure Sensor

A: REMOVAL

WARNING:
Place "NO OPEN FLAMES" signs near the working area.

1) Disconnect the ground cable from battery.
2) Open the fuel filler lid and remove the fuel filler cap.
3) Lift up the vehicle.
4) Disconnect connector (A) from fuel tank pressure sensor.
5) Pull out the vacuum hose (B) from vehicle.
6) Remove the fuel tank pressure sensor from the bracket.

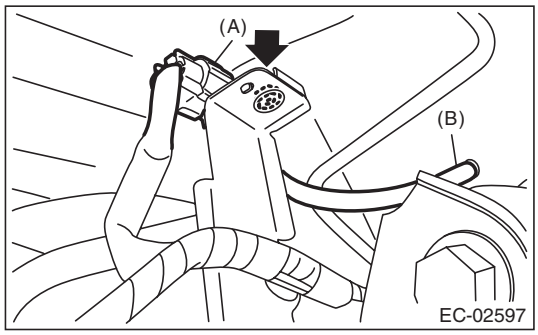

7) Disconnect the pressure hose from fuel tank pressure sensor and remove the fuel tank pressure sensor.

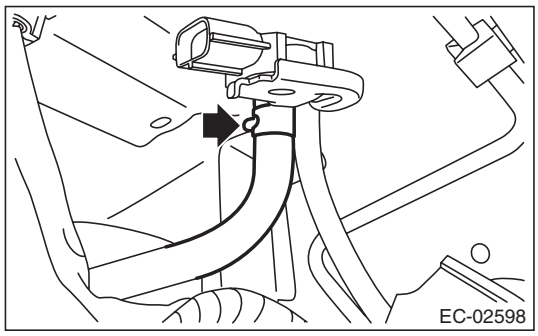

B: INSTALLATION

Install in the reverse order of removal.

Tightening torque:
7.35 N·m (0.7 kgf-m, 5.4 ft-lb)

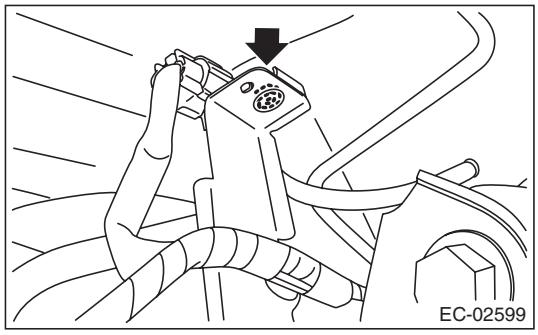

C: INSPECTION

1. FUEL TANK PRESSURE SENSOR

1) Check that the fuel tank pressure sensor does not have deformation, cracks or other damages.
2) Connect dry-cell battery positive terminal to terminal No. 3 and dry-cell battery ground terminal to terminal No. 1, circuit tester positive terminal to terminal No. 2 and the circuit tester negative terminal to terminal No. 1.

NOTE:
- Use new dry-cell batteries.
- Using circuit tester, check the voltage of a single dry-cell battery is 1.6 V or more. And also check the voltage of three batteries in series is between 4.8 V and 5.2 V.

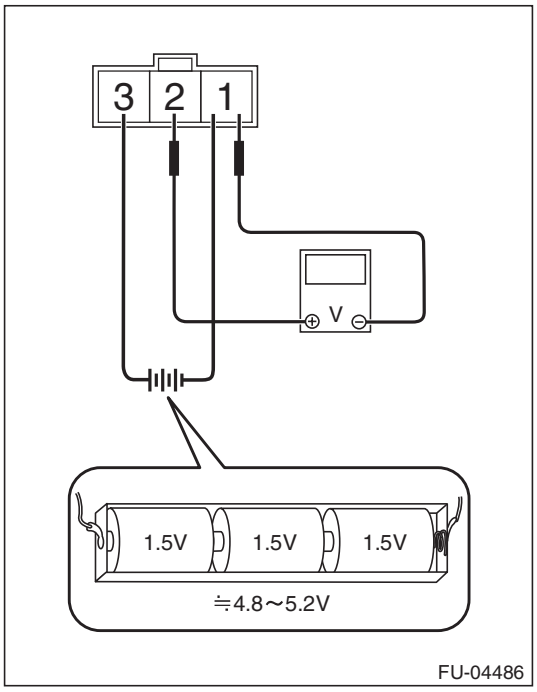

3) Check the voltage at a normal atmospheric pressure.

NOTE:
The atmospheric pressure at higher altitude is lower than normal. Therefore, the voltage is lower than the standard value.

Terminal No.	Standard
2 (+) and 1 (–)	Approx. 2.5 V (when 25°C (77°F))

GETtheMANUALS.org

4) Connect the Mighty Vac to the pressure port (A) on the fuel tank pressure sensor.

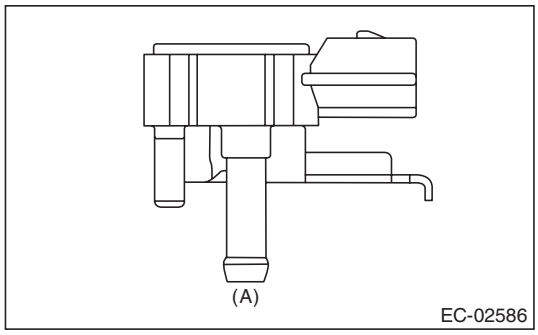

5) Check the voltage when generating vacuum and positive pressure using Mighty Vac.

CAUTION:
Be sure to apply pressure within a range of –10 — 20 kPa (–0.1 — 0.2 kgf/cm^2, –1.45 — 2.90 psi). Otherwise the fuel tank pressure sensor will be damaged.

Pressure	Terminal No.	Standard
–6.67 kPa (–0.07 kgf/cm^2, –0.97 psi)	2 (+) and 1 (–)	Approx. 0.5 V (when 25°C (77°F))
6.67 kPa (0.07 kgf/cm^2, 0.97 psi)		Approx. 4.5 V (when 25°C (77°F))

2. OTHER INSPECTIONS

Check that the hose has no cracks, damage or loose part.

GETtheMANUALS.org

11.Drain Filter

A: SPECIFICATION

Drain valve is a non-disassembled part, so do not remove the drain filter from drain valve. Refer to “Canister” for removal and installation procedures.
<Ref. to EC(H6DO)-6, REMOVAL, Canister.>
<Ref. to EC(H6DO)-7, INSTALLATION, Canister.>

GETtheMANUALS.org

12. Drain Valve

A: REMOVAL

Drain valve is integrated with canister. Refer to “Canister” for removal procedure. <Ref. to EC(H6DO)-6, REMOVAL, Canister.>

B: INSTALLATION

Refer to “Canister” for the installation procedure. <Ref. to EC(H6DO)-7, INSTALLATION, Canister.>

C: INSPECTION

Check the resistance between drain valve terminals.

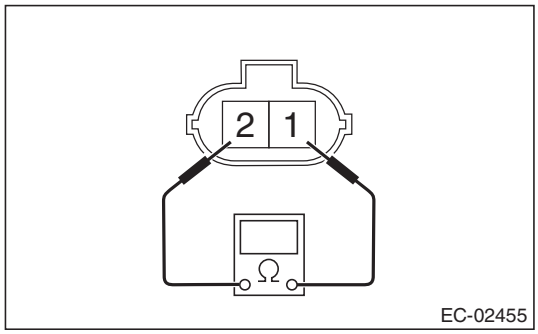

Terminal No.	Standard
1 and 2	20 — 30 Ω

GETtheMANUALS.org

13.PCV Valve

A: REMOVAL

CAUTION:
Do not remove unless the PCV valve is broken.
1) Remove the collector cover.

NOTE:
Follow the steps below when removing the collector cover.
(1) Pull up the two points at the rear (A).
(2) Pull up the two points at the front (B) while moving them forward.

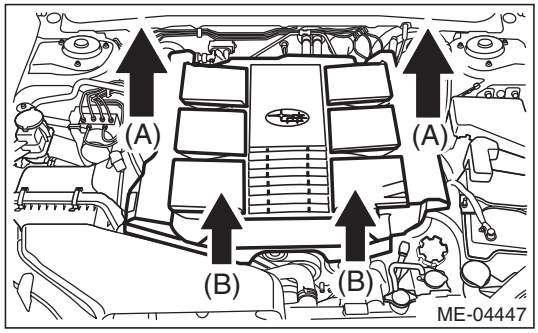

2) Remove the battery and battery carrier. <Ref. to SC(H4SO)-28, REMOVAL, Battery.>
3) Disconnect the PCV hose.

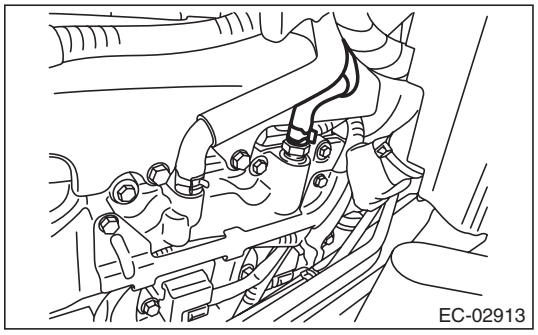

4) Remove the PCV valve from rocker cover.

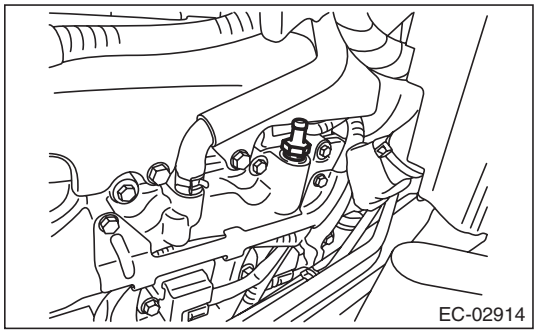

B: INSTALLATION

Install in the reverse order of removal.

NOTE:
Apply liquid gasket to the bolt threads of PCV valve.

Liquid gasket:
THREE BOND 1324 (Part No. 004403042) or equivalent

Tightening torque:
25 N·m (2.5 kgf-m, 18.4 ft-lb)

C: INSPECTION

1. PCV VALVE

1) Check that the PCV valve has no deformation, cracks or other damages.
2) Check that air is discharged from (B) when air is blown into (A).

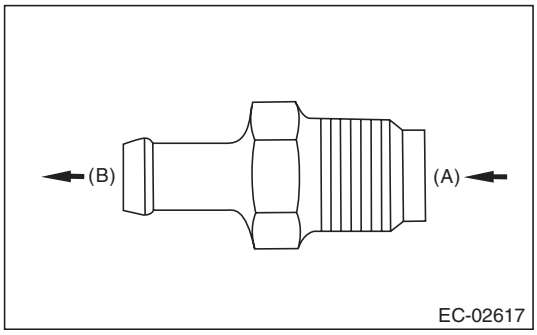

3) Check that air does not come out from (B) when air is blown into (A).

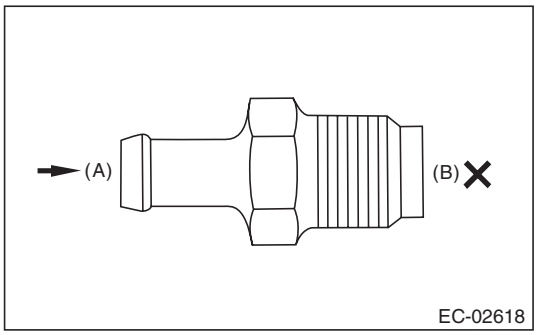

2. OTHER INSPECTIONS

Check that the PCV hose has no cracks, damage or loose part.

GETtheMANUALS.org

GETtheMANUALS.org

INTAKE (INDUCTION)

IN(H6DO)

		Page
1.	General Description	2
2.	Air Cleaner Element	4
3.	Air Cleaner Case	5
4.	Air Intake Boot	7
5.	Air Intake Duct	8
6.	Resonator Chamber	9

GETtheMANUALS.org

1. General Description

A: COMPONENT

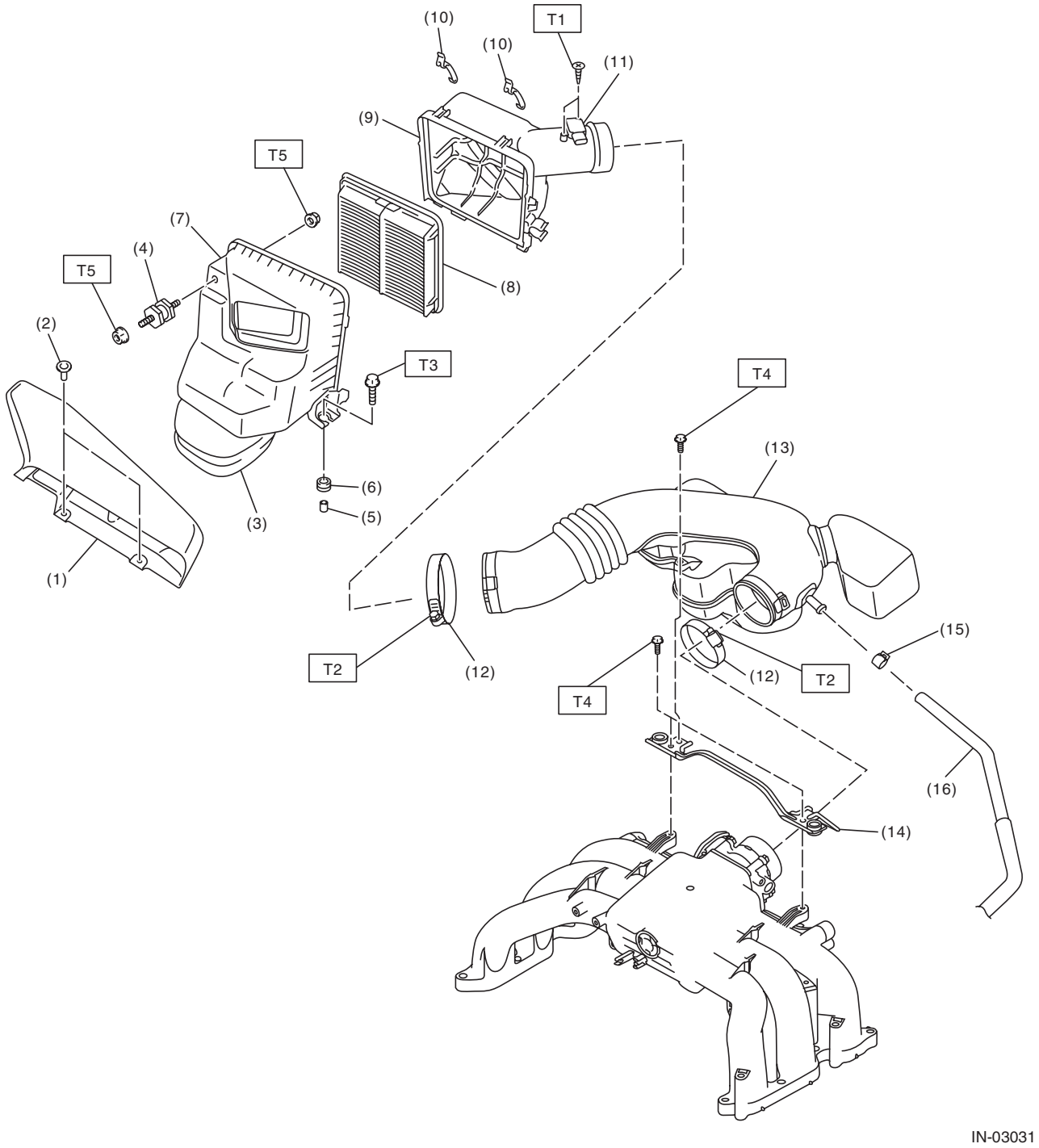

GETtheMANUALS.org

(1)	Air intake duct	(9)	Air cleaner case (rear)	***Tightening torque:N·m (kgf-m, ft-lb)***
(2)	Clip	(10)	Clip	***T1: 1 (0.1, 0.7)***
(3)	Resonator chamber	(11)	Mass air flow and intake air temperature sensor	***T2: 3 (0.3, 2.2)***
(4)	Cushion	(12)	Clamp	***T3: 6 (0.6, 4.4)***
(5)	Spacer	(13)	Air intake boot ASSY	***T4: 6.5 (0.7, 4.8)***
(6)	Cushion	(14)	Collector cover bracket	***T5: 7.5 (0.8, 5.5)***
(7)	Air cleaner case (front)	(15)	Clip	
(8)	Air cleaner element	(16)	Blow-by hose	

B: CAUTION

- Wear appropriate work clothing, including a cap, protective goggles and protective shoes when performing any work.
- Remove contamination including dirt and corrosion before removal, installation or disassembly.
- Keep the disassembled parts in order and protect them from dust and dirt.
- Before removal, installation or disassembly, be sure to clarify the failure. Avoid unnecessary removal, installation, disassembly and replacement.
- Vehicle components are extremely hot after driving. Be wary of receiving burns from heated parts.
- Be sure to tighten fasteners including bolts and nuts to the specified torque.
- Place shop jacks or rigid racks at the specified points.
- Before disconnecting connectors of sensors or units, be sure to disconnect the ground cable from the battery.

GETtheMANUALS.org

2. Air Cleaner Element

A: REMOVAL

1) Disconnect the ground cable from battery.
2) Disconnect the power steering oil pressure hose (suction hose) from the clip on the side of air cleaner case (rear).

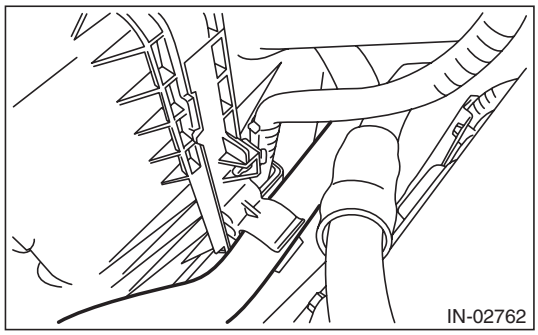

3) Disconnect the connector (A) from the mass air flow and intake air temperature sensor, and remove the clip (B).

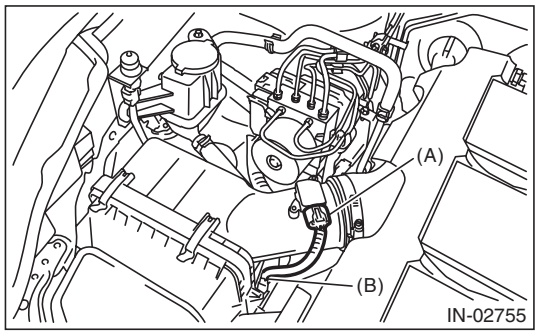

4) Loosen the clamp (A) which connects the air cleaner case (rear) and air intake boot assembly.
5) Remove the clip (B) securing the upper side of air cleaner case.

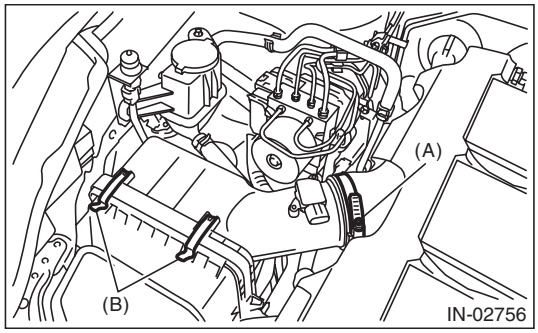

6) Pull the air cleaner case (rear) backward of the vehicle, and remove the air cleaner element.

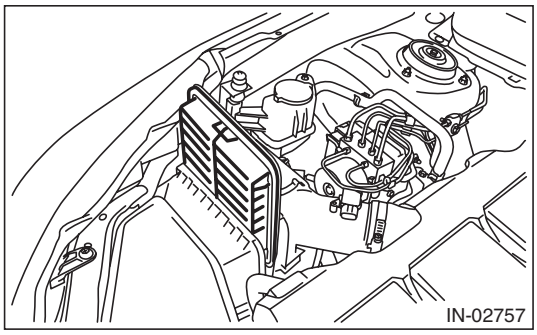

B: INSTALLATION

Install in the reverse order of removal.

CAUTION:
Be sure to use SUBARU genuine air cleaner element depending on the engine type when replacing the air cleaner elements. Using other air cleaner element may affect the engine performance.

NOTE:
- Check that there are no foreign objects in the air cleaner case.
- When installing the air cleaner case (rear), align the protrusion of the air cleaner case (rear) to the hole on the air cleaner case (front) to install.

Tightening torque:
3 N·m (0.3 kgf-m, 2.2 ft-lb)

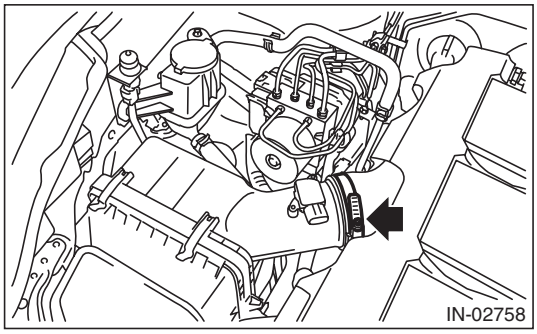

C: INSPECTION

1) Check that the air cleaner element has no deformation, cracks or other damages.
2) Check if the air cleaner element is extremely dirty.

GETthemANUALS.org

3. Air Cleaner Case

A: REMOVAL

1) Disconnect the ground cable from battery.
2) Disconnect the power steering oil pressure hose (suction hose) from the clip on the side of air cleaner case (rear).

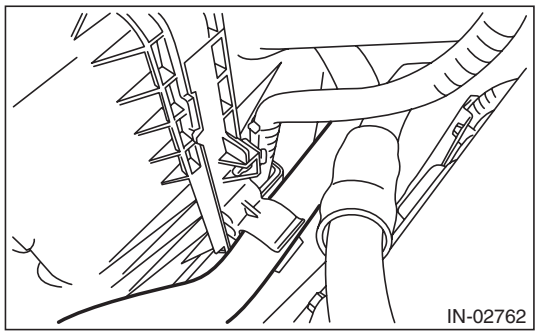

3) Disconnect the connector (A) from the mass air flow and intake air temperature sensor, and remove the clip (B).

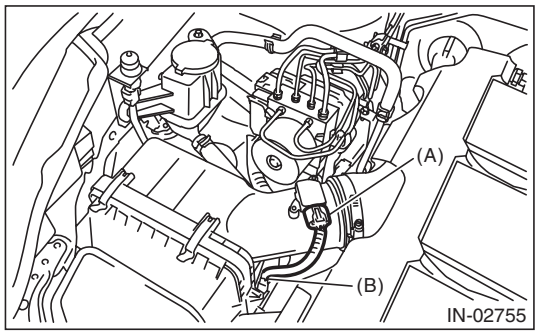

4) Loosen the clamp (A) which connects the air cleaner case (rear) and air intake boot.
5) Remove the clip (B) securing the upper side of air cleaner case (rear).

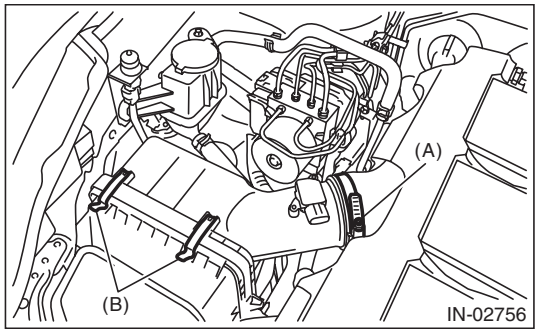

6) Remove the air intake duct. <Ref. to IN(H6DO)-8, REMOVAL, Air Intake Duct.>
7) Remove the air cleaner case (rear) and air cleaner element.
8) Remove the bolts (A) and nuts (B) which secure the air cleaner case (front) to the body.

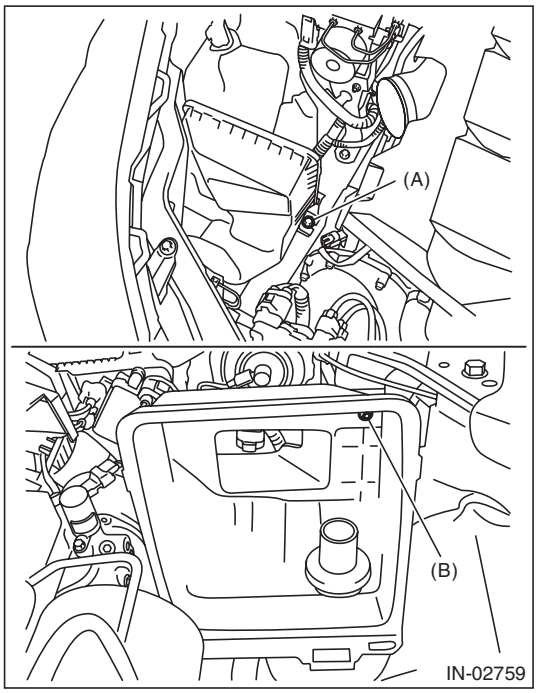

9) Remove the air cleaner case (front).

B: INSTALLATION

1) Install the bolt (A) and nut (B) which secure the air cleaner case (front) to the body.

Tightening torque:
Bolt (A)
6 N·m (0.6 kgf-m, 4.4 ft-lb)
Nut (B)
7.5 N·m (0.8 kgf-m, 5.5 ft-lb)

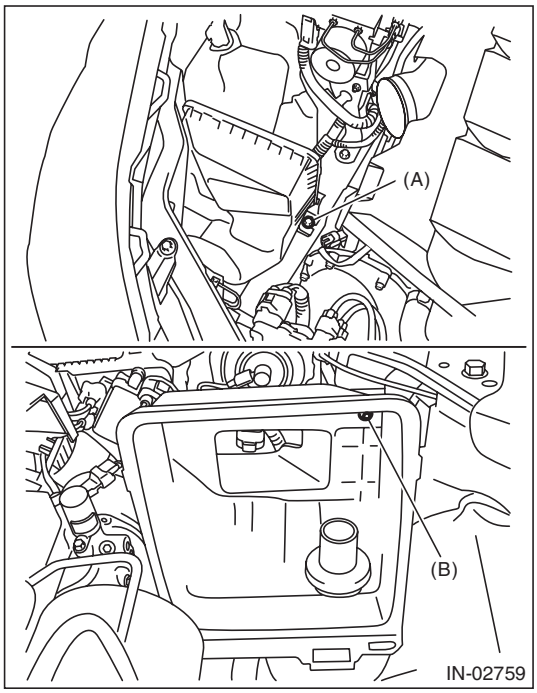

GETtheMANUALS.org

2) Install the air cleaner case (rear) and the air cleaner element.

NOTE:
When installing the air cleaner case (rear), align the protrusion of the air cleaner case (rear) to the hole on the air cleaner case (front) to install.

3) Install the air intake duct. <Ref. to IN(H6DO)-8, INSTALLATION, Air Intake Duct.>

4) Attach the clip (B) to the air cleaner case (front), and tighten the clamp (A) connecting the air cleaner case (rear) and air intake boot assembly.

Tightening torque:
Clamp (A)
3 N·m (0.3 kgf-m, 2.2 ft-lb)

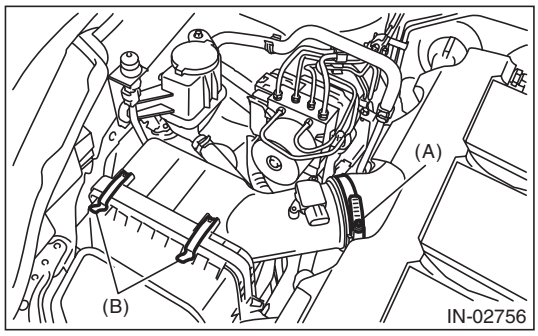

5) Connect the connector (A) to the mass air flow and intake air temperature sensor, and fasten the harness to clip (B).

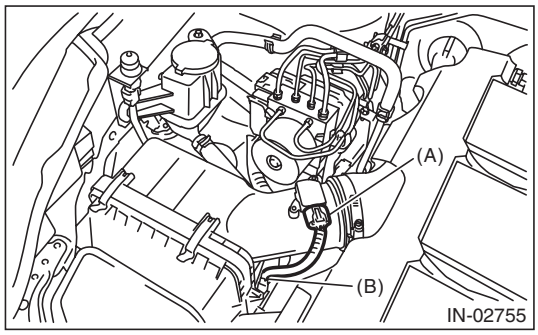

6) Connect the power steering oil pressure hose (suction hose) to the clip on the side of air cleaner case (rear).

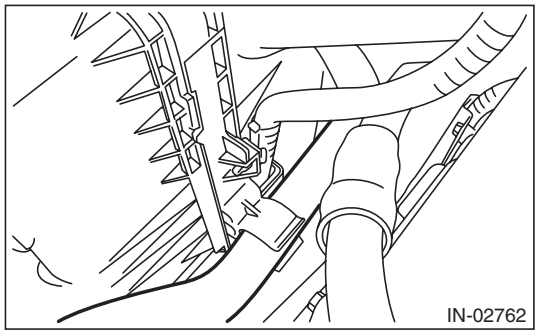

7) Connect the ground cable to battery.

C: INSPECTION

1) Check that the air cleaner case has no deformation, cracks or other damages.
2) Check the air intake boot assembly for cracks, damage or looseness.

GETtheMANUALS.org

4. Air Intake Boot

A: REMOVAL

1) Remove the collector cover.

NOTE:
Follow the steps below when removing the collector cover.
(1) Pull up the two points at the rear (A).
(2) Pull up the two points at the front (B) while moving them forward.

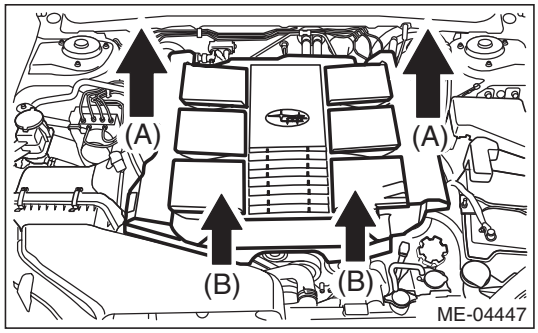

2) Loosen the clamp which connects the air intake boot assembly and air cleaner case (rear).

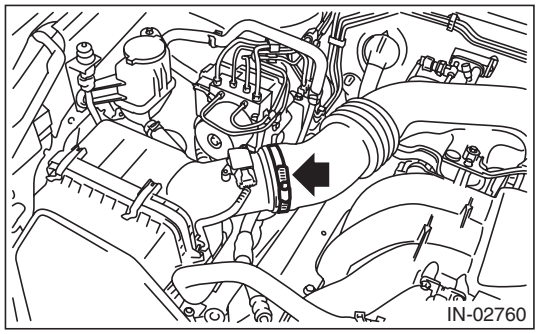

3) Loosen the clamp (A) which connects the air intake boot assembly and throttle body.
4) Loosen the bolt (B) which secures the air intake boot assembly and collector cover bracket.

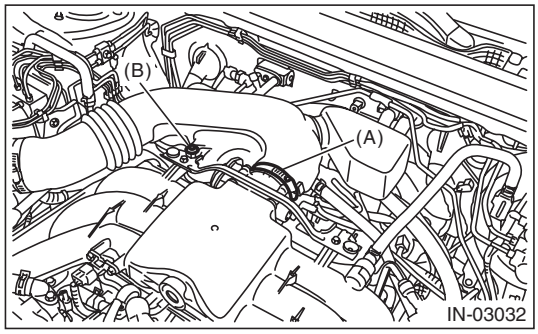

5) Disconnect the blow-by hose and remove the air intake boot assembly.

B: INSTALLATION

1) Install the air intake boot assembly and connect the blow-by hose.
2) Tighten the clamp (A) which connects the air intake boot assembly and throttle body.
3) Tighten the bolt (B) which secures the air intake boot assembly and collector cover bracket.

Tightening torque:
Clamp (A)
3 N·m (0.3 kgf-m, 2.2 ft-lb)
Bolt (B)
6.5 N·m (0.7 kgf-m, 4.8 ft-lb)

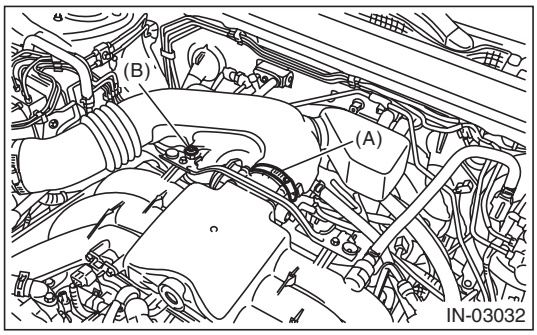

4) Tighten the clamp which connects the air intake boot assembly and air cleaner case (rear).

Tightening torque:
3 N·m (0.3 kgf-m, 2.2 ft-lb)

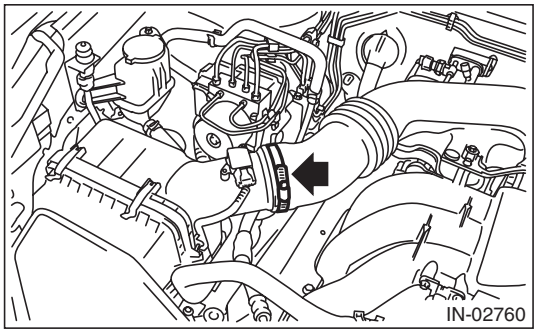

5) Install the collector cover.

C: INSPECTION

1) Check that the air intake boot assembly does not have deformation, cracks or other damages.
2) Check there is no foreign matter in the air intake boot assembly.

GETtheMANUALS.org

5. Air Intake Duct

A: REMOVAL

1) Remove the clip securing the air intake duct.
2) Remove the air intake duct.

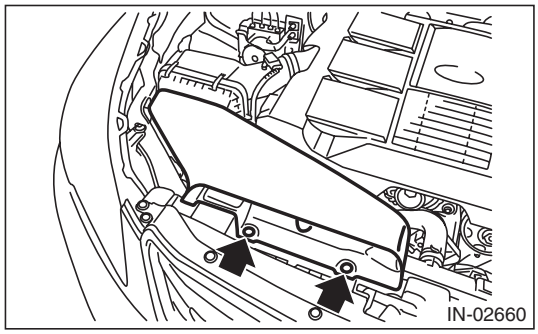

B: INSTALLATION

Install in the reverse order of removal.

C: INSPECTION

1) Check that the air intake duct has no deformation, cracks or other damages.
2) Check that no foreign matter is mixed in air intake duct.

GETtheMANUALS.org

6. Resonator Chamber

A: REMOVAL

The resonator chamber and air cleaner case are integrated into one unit; therefore, refer to “Air Cleaner Case” for removal procedure. <Ref. to IN(H6DO)-5, REMOVAL, Air Cleaner Case.>

B: INSTALLATION

The resonator chamber and air cleaner case are integrated into one unit; therefore, refer to “Air Cleaner Case” for installation procedure. <Ref. to IN(H6DO)-5, INSTALLATION, Air Cleaner Case.>

C: INSPECTION

Check that the resonator chamber has no deformation, cracks or other damages.

GETtheMANUALS.org

Resonator Chamber

GETtheMANUALS.org

MECHANICAL

ME(H6DO)

		Page
1.	General Description	2
2.	Compression	26
3.	Idle Speed	27
4.	Ignition Timing	28
5.	Intake Manifold Vacuum	29
6.	Engine Oil Pressure	30
7.	Fuel Pressure	31
8.	Valve Clearance	32
9.	Engine Assembly	36
10.	Engine Mounting	45
11.	Preparation for Overhaul	50
12.	V-belt	51
13.	Crank Pulley	52
14.	Chain Cover	53
15.	Timing Chain Assembly	62
16.	Cam Sprocket	82
17.	Crank Sprocket	83
18.	Camshaft	84
19.	Cylinder Head	92
20.	Cylinder Block	104
21.	Oil Flow Control Solenoid Valve	127
22.	Intake and Exhaust Valve	128
23.	Piston	129
24.	Connecting Rod	130
25.	Crankshaft	131
26.	Engine Trouble in General	132
27.	Engine Noise	138

GETtheMANUALS.org

1. General Description

A: SPECIFICATION

Engine	Model			3.6 L
	Cylinder arrangement			Horizontally opposed, liquid cooled, 6-cylinder, 4-stroke gasoline engine
	Valve system mechanism			Chain driven, double overhead camshaft, 4-valve/cylinder
	Bore × Stroke mm (in)			92 × 91 (3.622 × 3.583)
	Displacement cm^3 (cu in)			3,630 (221.5)
	Compression ratio			10.5
	Compression (350 rpm and fully open throttle) kPa (kgf/cm^2, psi)		Standard	1,275 — 1,471 (13.0 — 15.0, 185 — 213)
	Number of piston rings			Pressure ring: 2, Oil ring: 1
	Intake valve timing	Open	Max. retard	ATDC 10°
			Min. advance	BTDC 40°
		Close	Max. retard	ABDC 74°
			Min. advance	ABDC 24°
	Exhaust valve timing	Open	Max. retard	BBDC 4°
			Min. advance	BBDC 44°
		Close	Max. retard	ATDC 44°
			Min. advance	ATDC 4°
	Valve clearance mm (in)	Intake		$0.20^{+0.04}_{-0.06}$ ($0.0079^{+0.0016}_{-0.0024}$)
		Exhaust		0.35±0.05 (0.0138±0.0020)
	Idle speed [“P” or “N” range] rpm	No load	Standard	700±100
		A/C ON	Standard	700 — 910±100
	Ignition order			1 → 6 → 3 → 2 → 5 → 4
	Ignition timing BTDC/rpm		Standard	15°±8°/700

GETthemANUALS.org

NOTE:
OS: Oversize
US: Undersize

Camshaft	Bending limit		mm (in)	0.020 (0.00079)
	Cam lobe height mm (in)	Intake	Standard	45.90 — 46.00 (1.8071 — 1.8110)
		Exhaust	Standard	44.65 — 44.75 (1.7579 — 1.7618)
	Cam base circle diameter mm (in)	Intake	Standard	36.00 (1.4173)
		Exhaust	Standard	36.00 (1.4173)
	Journal O.D. mm (in)	Front	Standard	37.946 — 37.963 (1.4939 — 1.4946)
		Except for front	Standard	25.946 — 25.963 (1.0215 — 1.0222)
	Oil clearance	mm (in)	Standard	0.037 — 0.072 (0.0015 — 0.0028)
	Thrust clearance mm (in)	Intake	Standard	0.075 — 0.135 (0.0030 — 0.0053)
		Exhaust	Standard	0.075 — 0.135 (0.0030 — 0.0053)
Cylinder head	Warping limit (Mating surface with cylinder block)		mm (in)	0.020 (0.0008)
	Standard height		mm (in)	124±0.05 (4.88±0.0020)
Valve seat	Seating angle between valve and valve seat			90°
	Contacting width between valve and valve seat mm (in)	Intake	Standard	1.0 (0.039)
		Exhaust	Standard	1.5 (0.059)
Valve guide	Clearance between the valve guide and valve stem mm (in)	Intake	Standard	0.030 — 0.057 (0.0012 — 0.0022)
		Exhaust	Standard	0.040 — 0.067 (0.0016 — 0.0026)
	Inside diameter		mm (in)	5.500 — 5.512 (0.2165 — 0.2170)
	Valve stem outer diameters mm (in)	Intake		5.455 — 5.470 (0.2148 — 0.2154)
		Exhaust		5.445 — 5.460 (0.2144 — 0.2150)
	Valve guide protrusion amount	Intake	mm (in)	8.6 — 9.0 (0.3386 — 0.3543)
		Exhaust	mm (in)	10.7 — 11.1 (0.4213 — 0.4370)
Valve	Head edge thickness mm (in)	Intake	Standard	1.0 (0.039)
		Exhaust	Standard	1.2 (0.047)
	Overall length mm (in)	Intake		103.5 (4.075)
		Exhaust		103.2 (4.063)
Valve spring	Free length mm (in)	Intake		49.06 (1.9315)
		Exhaust		49.06 (1.9315)
	Tension/spring height	N (kgf, lb)/mm (in)	Set	182 — 210 (18.6 — 21.4, 40.9 — 47.2) / 31.0 (1.220)
			Lift	316 — 350 (32.2 — 35.7, 71.0 — 78.7) / 21.0 (0.827)
	Squareness			2.5°, 2.1 mm (0.083 in)
Valve lifter	Outer diameter	mm (in)	Standard	32.959 — 32.975 (1.2976 — 1.2982)
	Valve lifter mating surface inner diameter	mm (in)	Standard	32.994 — 33.016 (1.2990 — 1.2998)
	Valve lifter and valve lifter mating surface clearance	mm (in)	Standard	0.019 — 0.057 (0.0007 — 0.0022)
Cylinder block	Warping limit (Mating surface with cylinder head)		mm (in)	0.020 (0.0008)
	Standard height		mm (in)	202 (7.95)
	Cylindricality	mm (in)	Limit	0.030 (0.0012)
	Out-of-roundness	mm (in)	Limit	0.010 (0.0004)
	Clearance between cylinder and piston at 20°C (68°F)	mm (in)	Standard	–0.010 — 0.010 (–0.0004 — 0.0004)
	Cylinder inner diameter boring limit (diameter)		mm (in)	92.515 (3.6717)

GETthemANUALS.org

Piston	Piston grade point mm (in)			37.3 (1.4685)
	Outer diameter mm (in)	Standard	A	92.005 — 92.015 (3.6222 — 3.6226)
			B	91.995 — 92.005 (3.6218 — 3.6222)
		0.25 (0.0098) OS		92.245 — 92.265 (3.6317 — 3.6325)
		0.50 (0.0197) OS		92.495 — 92.515 (3.6415 — 3.6423)
	Inner diameter of piston pin hole mm (in)		Standard	22.000 — 22.006 (0.8661 — 0.8664)
Piston pin	Degree of fit			Piston pin must be fitted into position with thumb at 20°C (68°F).
	Outer diameter mm (in)		Standard	21.994 — 22.000 (0.8659 — 0.8661)
	Clearance between piston and piston pin mm (in)		Standard	0.004 — 0.008 (0.0002 — 0.0003)
Piston ring	Piston ring gap mm (in)	Top ring	Standard	0.20 — 0.35 (0.0079 — 0.0138)
		Second ring	Standard	0.40 — 0.50 (0.0157 — 0.0197)
		Oil ring	Standard	0.20 — 0.50 (0.0079 — 0.0197)
	Clearance between piston ring and piston ring groove mm (in)	Top ring	Standard	0.040 — 0.080 (0.0016 — 0.0031)
		Second ring	Standard	0.030 — 0.070 (0.0012 — 0.0028)
		Oil ring	Standard	0.065 — 0.165 (0.0026 — 0.0065)
Connecting rod and connecting rod bearing	Bend or twist per 100 mm (3.94 in) in length mm (in)		Limit	0.10 (0.0039 in)
	Thrust clearance mm (in)		Standard	0.070 — 0.330 (0.0028 — 0.0130)
	Oil clearance mm (in)		Standard	0.016 — 0.043 (0.0006 — 0.0017)
	Bearing size (Thickness at center) mm (in)	Standard		1.489 — 1.505 (0.0586 — 0.0593)
		0.03 (0.0012) US		1.507 — 1.515 (0.0593 — 0.0596)
		0.05 (0.0020) US		1.517 — 1.525 (0.0597 — 0.0600)
		0.25 (0.0098) US		1.617 — 1.625 (0.0637 — 0.0640)
Bushing of small end	Clearance between piston pin and bushing mm (in)		Standard	0 — 0.022 (0 — 0.0009)

GETthemANUALS.org

Crankshaft and crankshaft bearing	Bending limit			mm (in)	0.035 (0.0014)
	Crank pin	Out-of-roundness	mm (in)	Limit	0.005 (0.0002)
		Cylindricality	mm (in)	Limit	0.006 (0.0002)
		Grinding limit		mm (in)	51.734 (2.0368)
	Crank journal	Out-of-roundness	mm (in)	Limit	0.005 (0.0002)
		Cylindricality	mm (in)	Limit	0.006 (0.0002)
		Grinding limit		mm (in)	63.742 (2.5095)
	Crank pin outer diameter mm (in)		Standard		51.976 — 52.000 (2.0463 — 2.0472)
			0.03 (0.0012) US		51.954 — 51.970 (2.0454 — 2.0461)
			0.05 (0.0020) US		51.934 — 51.950 (2.0446 — 2.0453)
			0.25 (0.0098) US		51.734 — 51.750 (2.0368 — 2.0374)
	Crank journal outer diameter mm (in)	#1, #3, #5, #7	Standard		63.992 — 64.016 (2.5194 — 2.5203)
			0.03 (0.0012) US		63.962 — 63.978 (2.5182 — 2.5188)
			0.05 (0.0020) US		63.942 — 63.958 (2.5174 — 2.5180)
			0.25 (0.0098) US		63.742 — 63.758 (2.5095 — 2.5102)
		#2, #4, #6	Standard		63.992 — 64.016 (2.5194 — 2.5203)
			0.03 (0.0012) US		63.962 — 63.978 (2.5182 — 2.5188)
			0.05 (0.0020) US		63.942 — 63.958 (2.5174 — 2.5180)
			0.25 (0.0098) US		63.742 — 63.758 (2.5095 — 2.5102)
	Bearing size (Thickness at center) mm (in)	#1, #3, #5	Standard		1.996 — 2.013 (0.0786 — 0.0793)
			0.03 (0.0012) US		2.011 — 2.014 (0.0792 — 0.0793)
			0.05 (0.0020) US		2.021 — 2.024 (0.0796 — 0.0797)
			0.25 (0.0098) US		2.121 — 2.124 (0.0835 — 0.0836)
		#2, #4, #6	Standard		1.996 — 2.013 (0.0786 — 0.0793)
			0.03 (0.0012) US		2.015 — 2.018 (0.0793 — 0.0794)
			0.05 (0.0020) US		2.025 — 2.028 (0.0797 — 0.0798)
			0.25 (0.0098) US		2.125 — 2.128 (0.0837 — 0.0838)
		#7	Standard		1.992 — 2.009 (0.0784 — 0.0791)
			0.03 (0.0012) US		2.011 — 2.014 (0.0792 — 0.0793)
			0.05 (0.0020) US		2.021 — 2.024 (0.0796 — 0.0797)
			0.25 (0.0098) US		2.121 — 2.124 (0.0835 — 0.0836)
	Thrust clearance mm (in)		Standard		0.030 — 0.115 (0.0012 — 0.0045)
	Oil clearance mm (in)		Standard		0.010 — 0.030 (0.0004 — 0.0012)

GETthemANUALS.org

B: COMPONENT

1. V-BELT

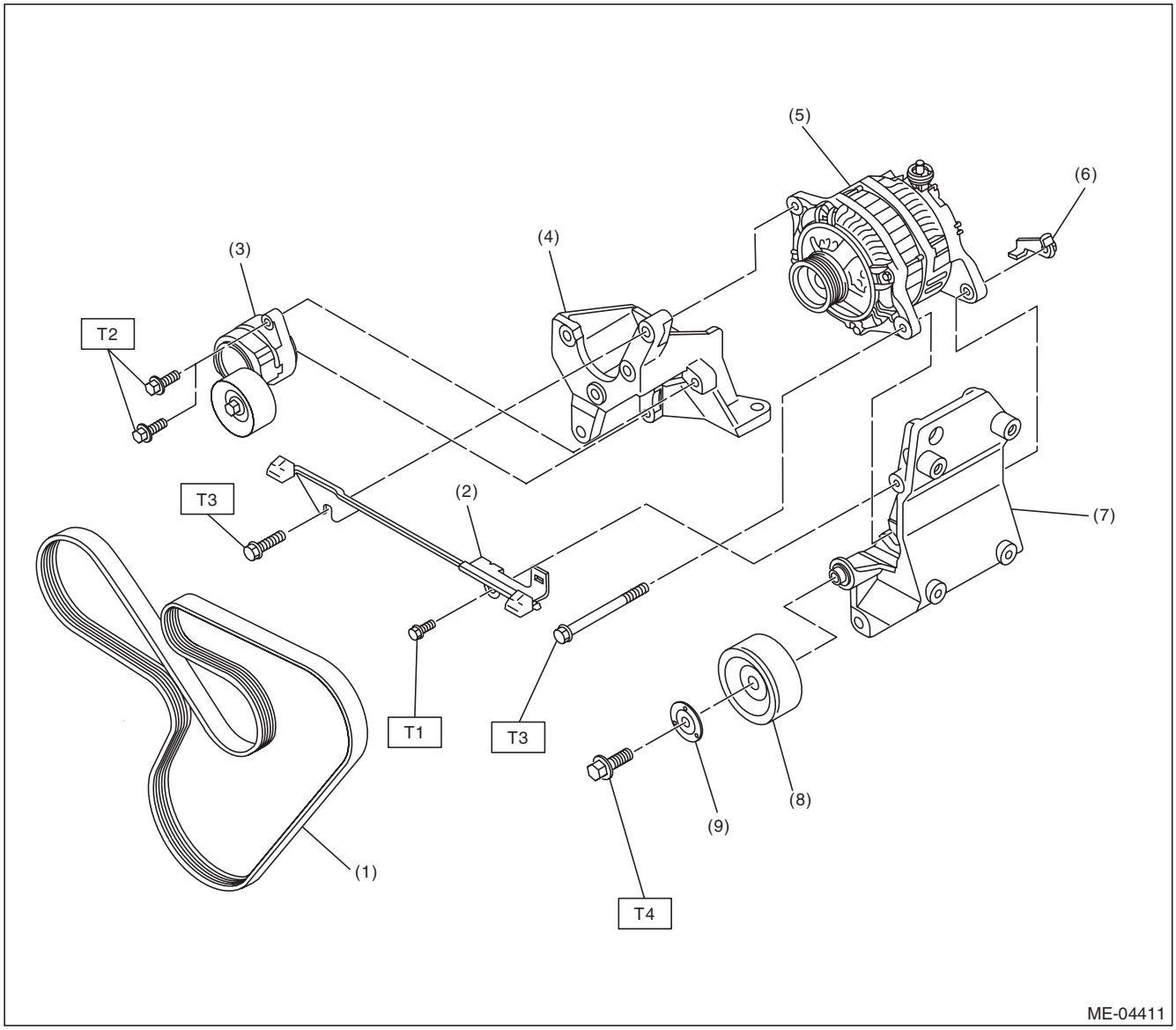

(1)	V-belt	(6)	Generator plate	***Tightening torque:N·m (kgf-m, ft-lb)***
(2)	Collector cover bracket	(7)	A/C compressor stay	***T1: 6.4 (0.7, 4.7)***
(3)	Belt tensioner ASSY	(8)	Idler pulley	***T2: 20 (2.0, 14.8)***
(4)	Power steering pump bracket	(9)	Idler pulley cover	***T3: 25 (2.5, 18.4)***
(5)	Generator			***T4: 33 (3.4, 24.3)***

GETthemANUALS.org

2. CHAIN COVER

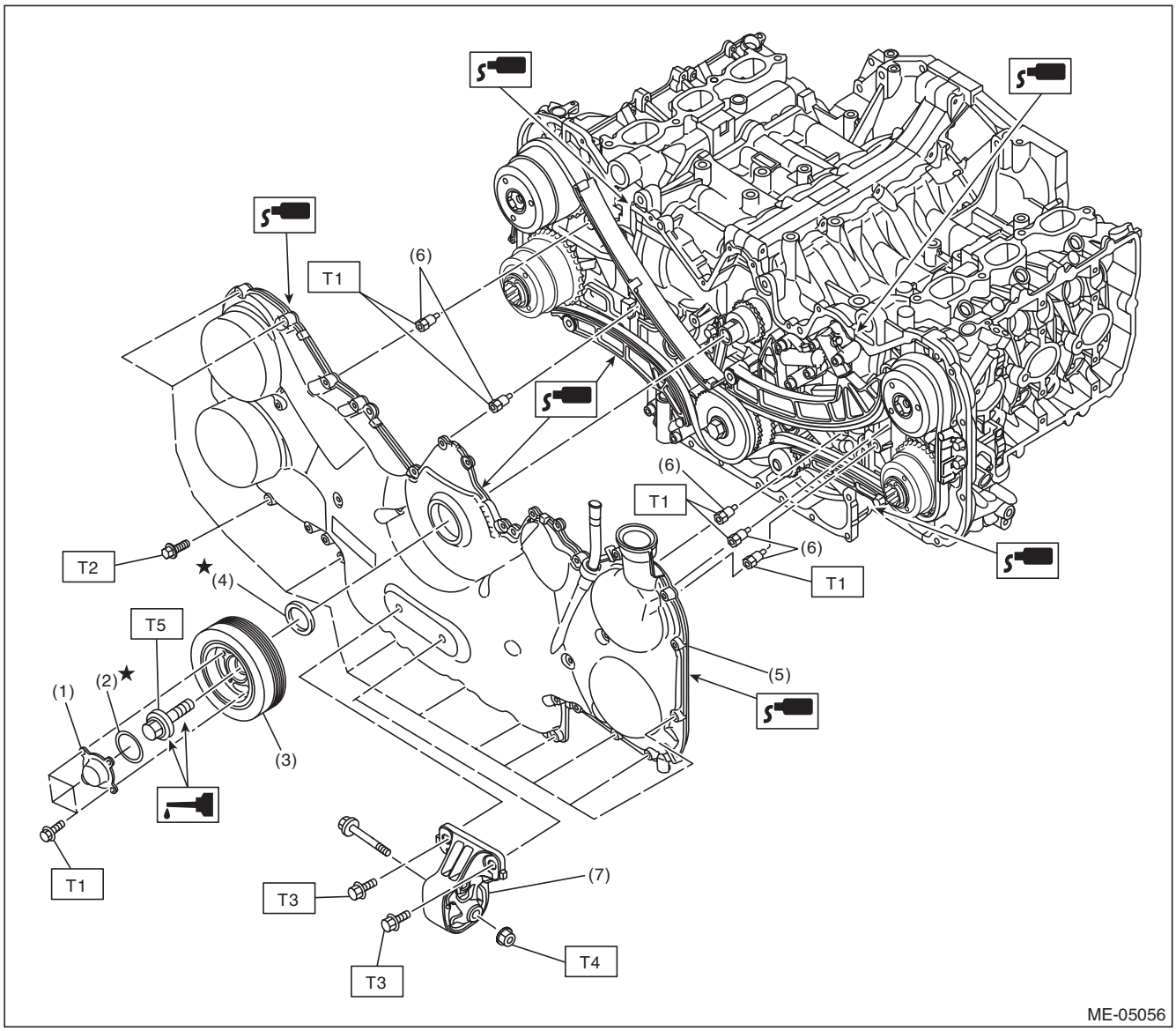

(1)	Crank pulley cover	(7)	Front mount
(2)	O-ring		
(3)	Crank pulley		
(4)	Oil seal		
(5)	Chain cover		
(6)	Bolt		

Tightening torque:N·m (kgf-m, ft-lb)

T1: 6.4 (0.7, 4.7)
T2: 10 (1.0, 7.4)
T3: 25 (2.5, 18.4)
T4: 45 (4.6, 33.2)
T5: 195 (19.9, 143.8)

GETthemANUALS.org

3. TIMING CHAIN

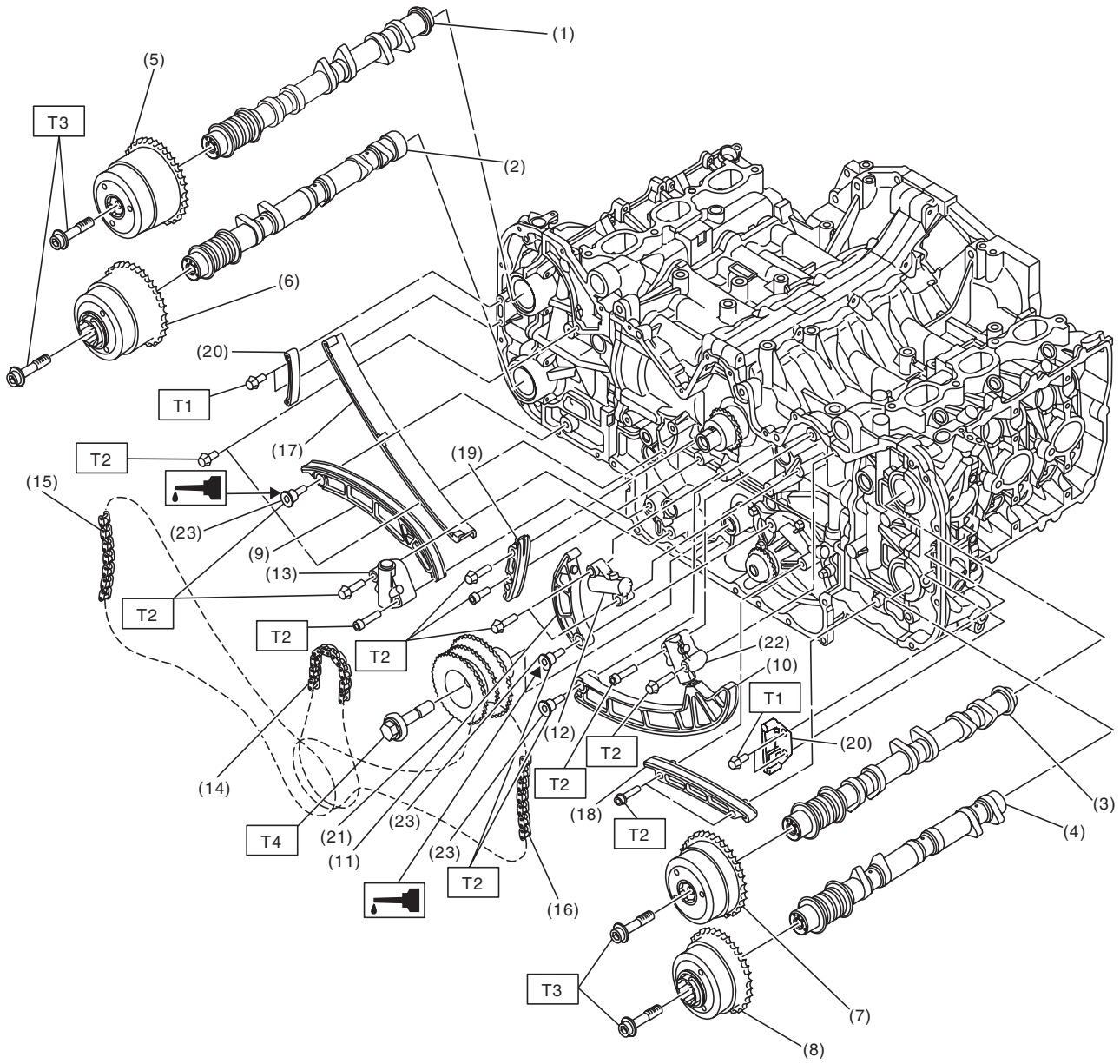

ME-04428

GETtheMANUALS.org

(1) Intake camshaft (RH)
(2) Exhaust camshaft (RH)
(3) Intake camshaft (LH)
(4) Exhaust camshaft (LH)
(5) Intake cam sprocket (RH)
(6) Exhaust cam sprocket (RH)
(7) Intake cam sprocket (LH)
(8) Exhaust cam sprocket (LH)
(9) Chain tensioner lever (RH)
(10) Chain tensioner lever (LH)
(11) Chain tensioner lever (main)
(12) Chain tensioner (main)
(13) Chain tensioner (RH)
(14) Timing chain (main)
(15) Timing chain (RH)
(16) Timing chain (LH)
(17) Chain guide (RH)
(18) Chain guide (LH)
(19) Chain guide (main)
(20) Chain guide (between cams)
(21) Idler sprocket
(22) Chain tensioner (LH)
(23) Chain tensioner lever shaft

Tightening torque:N·m (kgf-m, ft-lb)	
T1:	***6.4 (0.7, 4.7)***
T2:	***16 (1.6, 11.8)***
T3:	***<Ref. to ME(H6DO)-82, Cam Sprocket.>***
T4:	***120 (12.2, 88.5)***

GETthemANUALS.org

4. CYLINDER HEAD AND CAMSHAFT

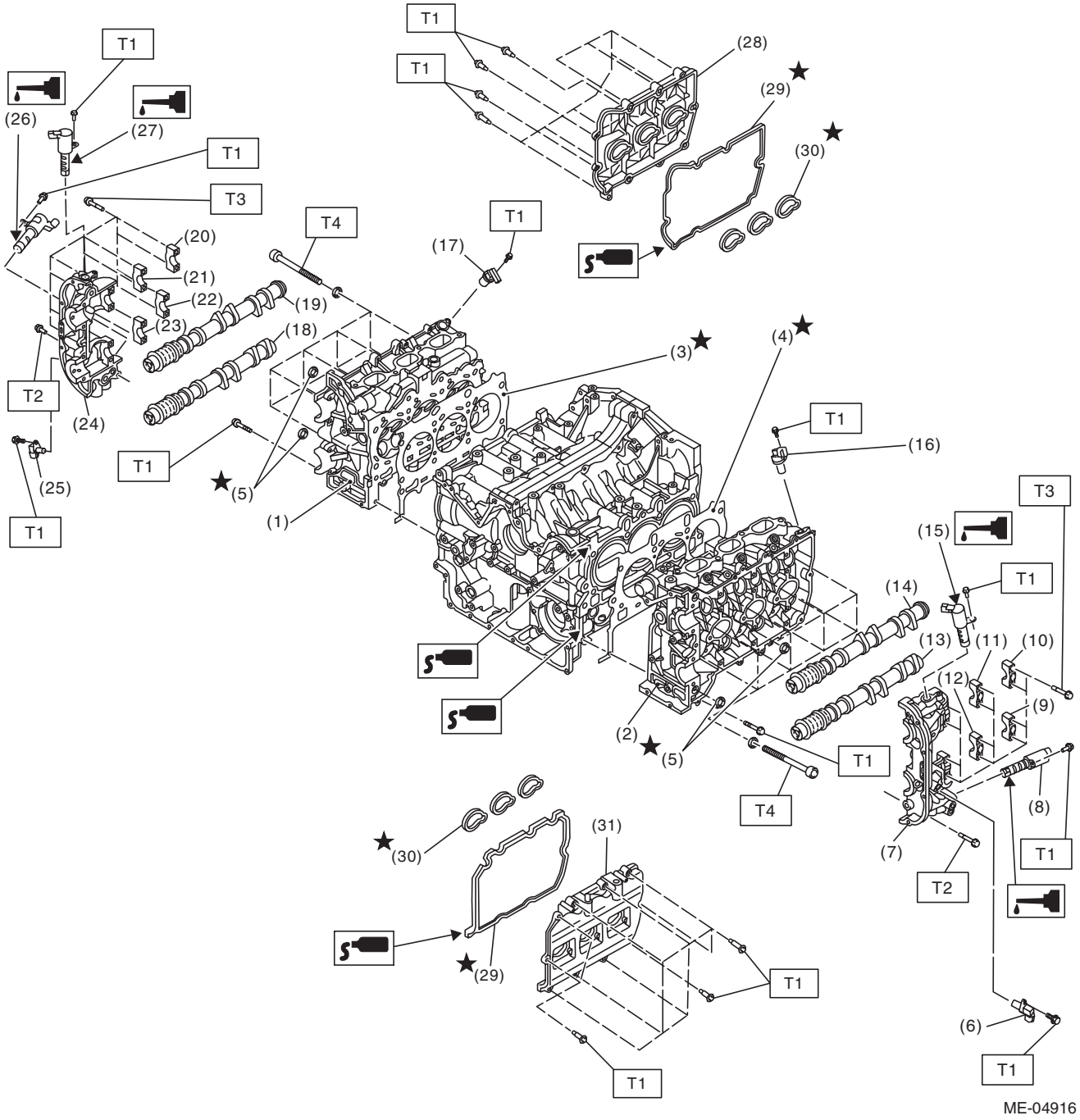

GETtheMANUALS.org

(1) Cylinder head (RH)
(2) Cylinder head (LH)
(3) Cylinder head gasket (RH)
(4) Cylinder head gasket (LH)
(5) O-ring
(6) Exhaust camshaft position sensor (LH)
(7) Front camshaft cap (LH)
(8) Exhaust oil flow control solenoid valve (LH)
(9) Exhaust camshaft cap (rear LH)
(10) Intake camshaft cap (rear LH)
(11) Intake camshaft cap (center LH)
(12) Exhaust camshaft cap (center LH)
(13) Exhaust camshaft (LH)
(14) Intake camshaft (LH)
(15) Intake oil flow control solenoid valve (LH)
(16) Intake camshaft position sensor (LH)
(17) Intake camshaft position sensor (RH)
(18) Exhaust camshaft (RH)
(19) Intake camshaft (RH)
(20) Intake camshaft cap (rear RH)
(21) Intake camshaft cap (center RH)
(22) Exhaust camshaft cap (rear RH)
(23) Exhaust camshaft cap (center RH)
(24) Front camshaft cap (RH)
(25) Exhaust camshaft position sensor (RH)
(26) Exhaust oil flow control solenoid valve (RH)
(27) Intake oil flow control solenoid valve (RH)
(28) Rocker cover (RH)
(29) Gasket
(30) Gasket
(31) Rocker cover (LH)

Tightening torque:N·m (kgf-m, ft-lb)	
T1:	***6.4 (0.7, 4.7)***
T2:	***9.75 (1.0, 7.2)***
T3:	***16 (1.6, 11.8)***
T4:	***<Ref. to ME(H6DO)-92, Cylinder Head.>***

GETtheMANUALS.org

5. CYLINDER HEAD AND VALVE ASSEMBLY

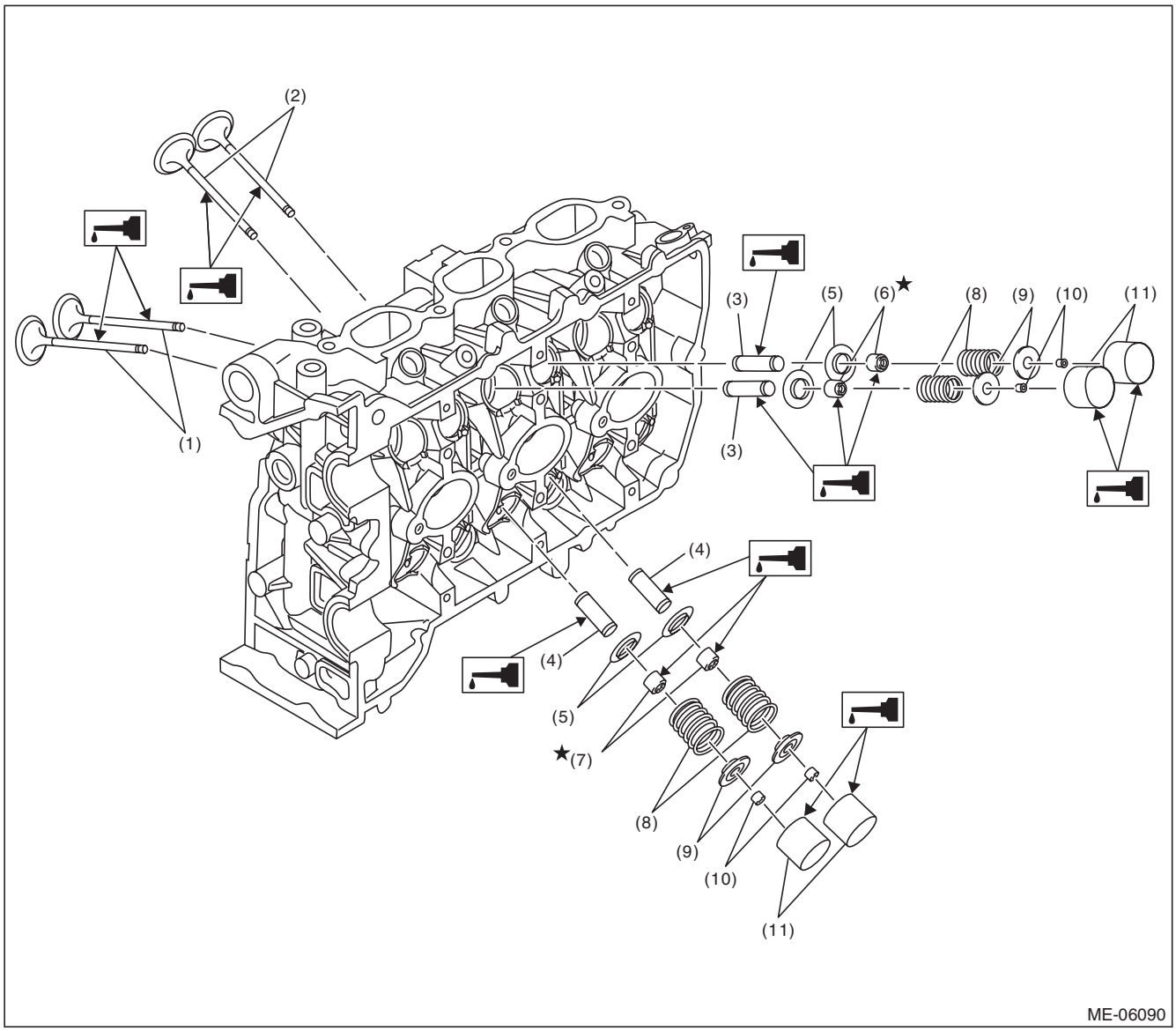

(1)	Intake valve	(5)	Valve spring seat	(9)	Valve spring retainer
(2)	Exhaust valve	(6)	Stem seal (intake)	(10)	Valve collet
(3)	Valve guide (intake)	(7)	Stem seal (exhaust)	(11)	Valve lifter
(4)	Valve guide (exhaust)	(8)	Valve spring		

GETtheMANUALS.org

6. CYLINDER BLOCK

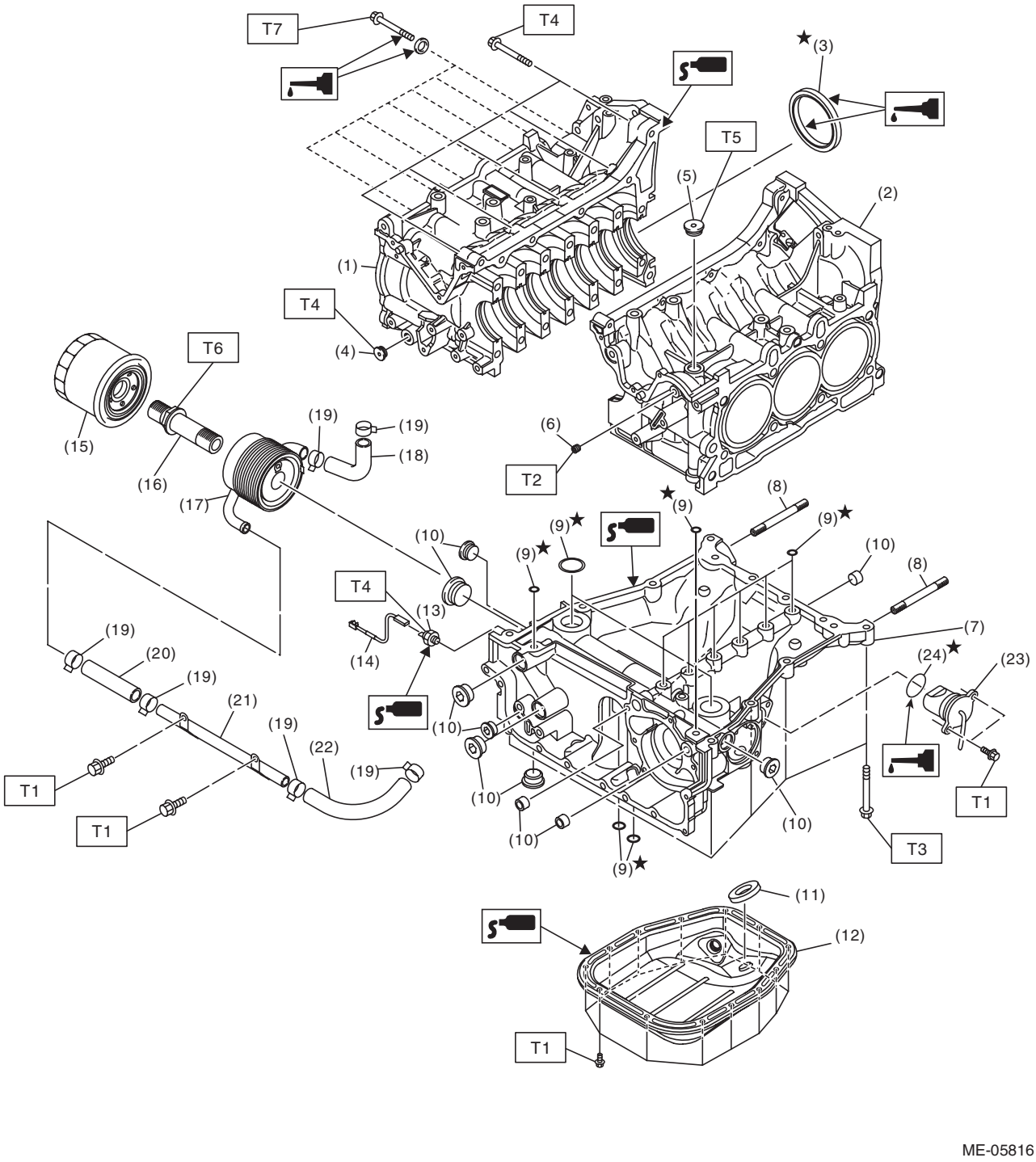

ME-05816

GETtheMANUALS.org

(1) Cylinder block (RH)
(2) Cylinder block (LH)
(3) Oil seal
(4) Plug
(5) Plug
(6) Orifice
(7) Oil pan upper
(8) Stud bolt
(9) O-ring
(10) Plug
(11) Magnet
(12) Oil pan lower
(13) Oil pressure switch
(14) Oil pressure switch harness
(15) Oil filter
(16) Oil cooler connector
(17) Oil cooler
(18) Hose
(19) Clamp
(20) Hose
(21) Oil cooler pipe
(22) Hose
(23) Oil level switch
(24) O-ring

Tightening torque:N·m (kgf-m, ft-lb)	
T1:	***6.4 (0.7, 4.7)***
T2:	***17 (1.7, 12.5)***
T3:	***18 (1.8, 13.3)***
T4:	***25 (2.5, 18.4)***
T5:	***37 (3.8, 27.3)***
T6:	***54 (5.5, 39.8)***
T7:	***<Ref. to ME(H6DO)-104, Cylinder Block.>***

GETtheMANUALS.org

7. CRANKSHAFT AND PISTON

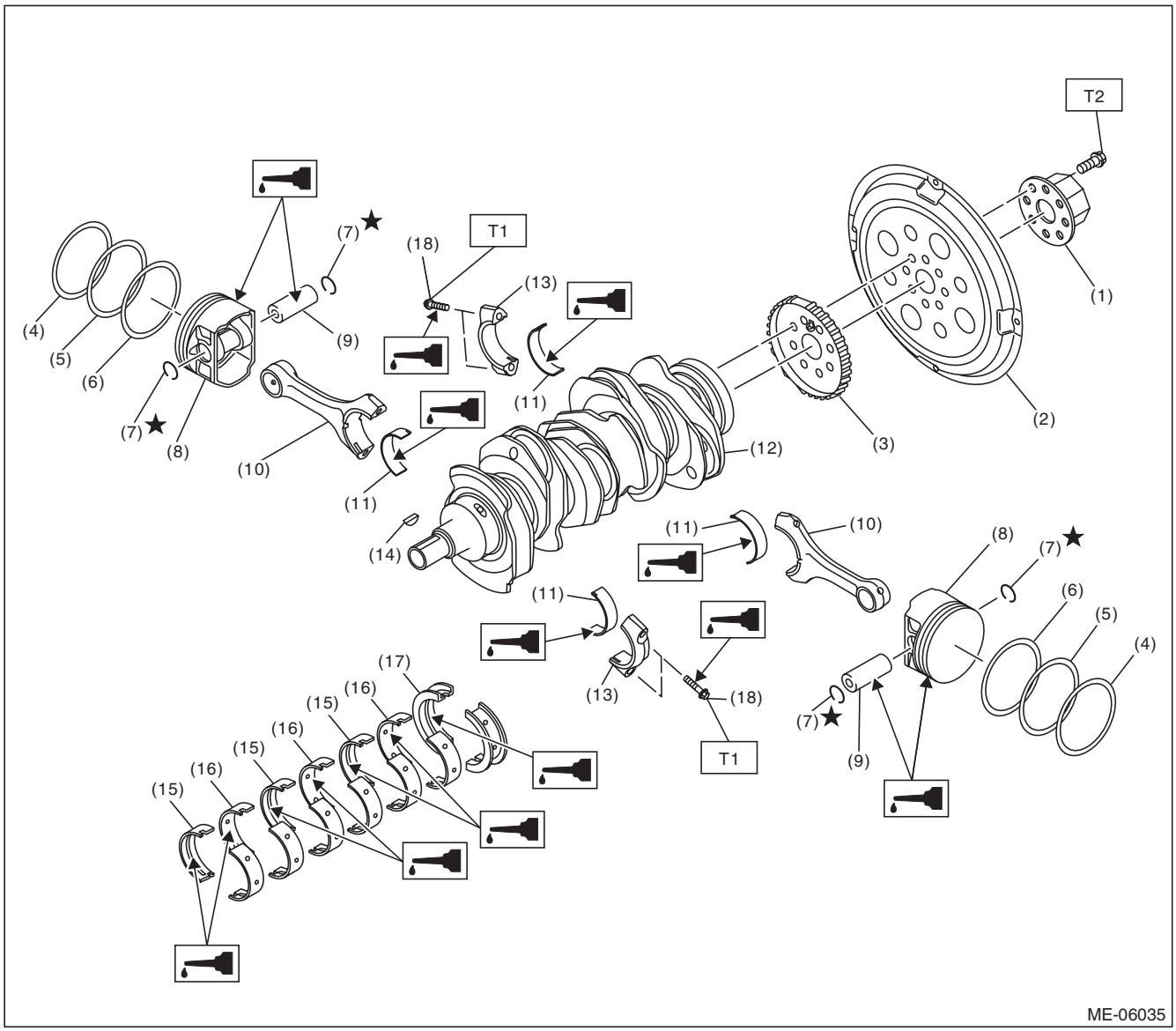

(1)	Reinforcement	(9)	Piston pin	(17)	Crankshaft bearing #7
(2)	Drive plate	(10)	Connecting rod	(18)	Connecting rod cap bolt
(3)	Crankshaft sensor plate	(11)	Connecting rod bearing		
(4)	Top ring	(12)	Crankshaft		
(5)	Second ring	(13)	Connecting rod cap		
(6)	Oil ring	(14)	Woodruff key		
(7)	Circlip	(15)	Crankshaft bearing #1, #3, #5		
(8)	Piston	(16)	Crankshaft bearing #2, #4, #6		

Tightening torque:N·m (kgf-m, ft-lb)

T1: 60 (6.1, 44.3)

T2: <Ref. to 5AT-64, INSTALLATION, Drive Plate.>

GETtheMANUALS.org

8. ENGINE HARNESS

Engine harness assembly diagram 1

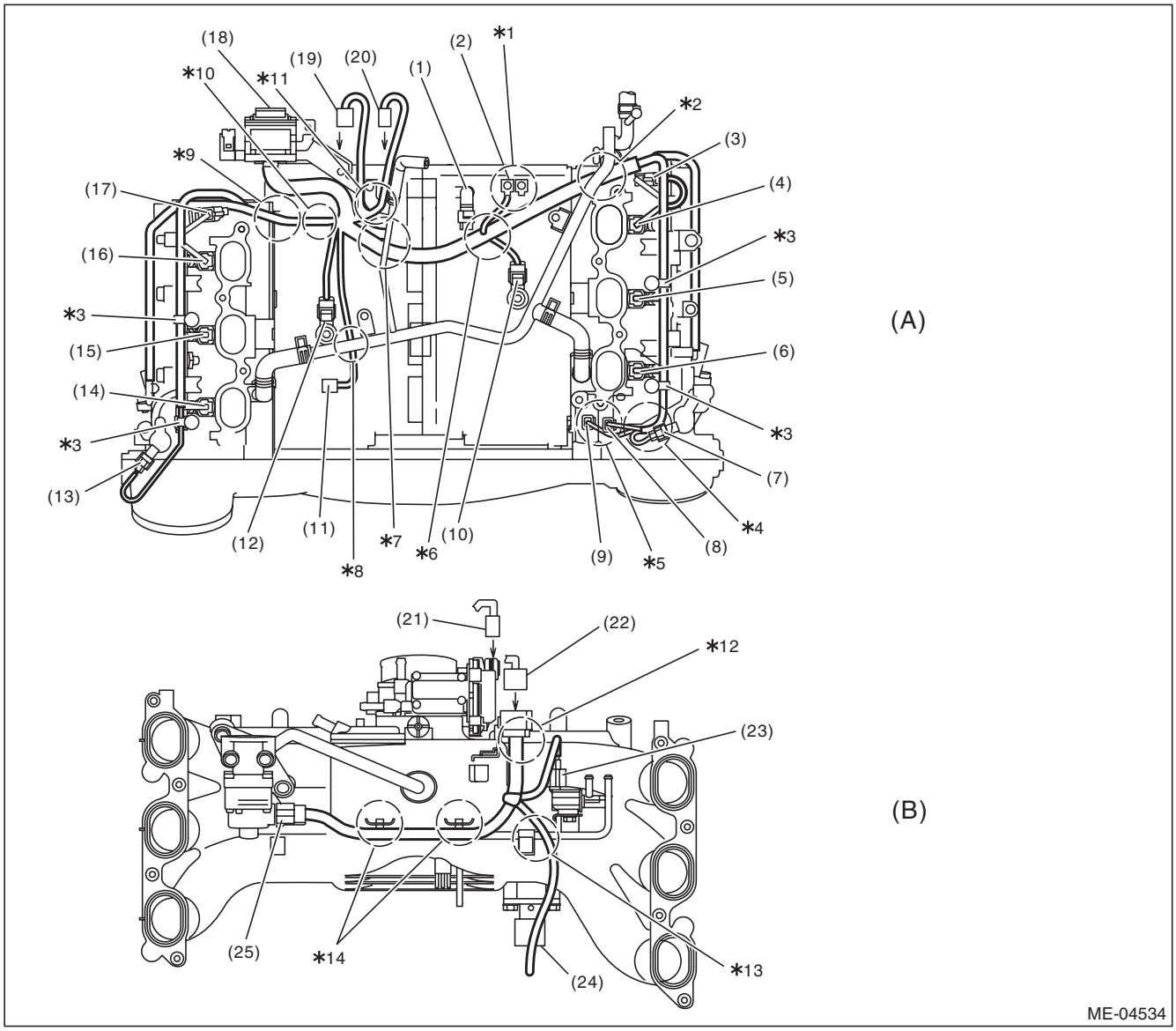

GETtheMANUALS.org

(A)	Cylinder block upper face	(B)	Intake manifold back surface		
(1)	Crankshaft position sensor connector	(10)	Knock sensor LH connector	(19)	Upper/lower connection connector (to intake manifold)
(2)	Engine ground	(11)	Power steering switch connector	(20)	Electronic throttle control connector (to intake manifold)
(3)	Intake camshaft position sensor LH connector	(12)	Knock sensor RH connector	(21)	Electronic throttle control connector (from upper part of the cylinder block)
(4)	#6 injector connector	(13)	Intake oil flow control solenoid valve RH connector	(22)	Upper/lower connection connector (from upper part of the cylinder block)
(5)	#4 injector connector	(14)	#1 injector connector	(23)	Purge control solenoid valve connector
(6)	#2 injector connector	(15)	#3 injector connector	(24)	Manifold absolute pressure sensor connector
(7)	Intake oil flow control solenoid valve LH connector	(16)	#5 injector connector	(25)	EGR valve connector
(8)	Oil temperature sensor connector	(17)	Intake camshaft position sensor RH connector		
(9)	Engine coolant temperature sensor connector	(18)	Engine harness docking connector		

*1: Install so that engine ground terminals face the rear side of vehicle.
*2: Route under the heater pipe.
*3: Attach the engine harness fixing clip to the fuel pipe stay.
*4: Route from the cutout portion on the fuel pipe protector LH.
*5: Be careful not to mix up the connectors of oil temperature sensor and engine coolant temperature sensor.
*6: Route between crankshaft position sensor and knock sensor LH.
*7: Route under the heater pipe.
*8: Route under the heater pipe.
*9: Route under the fuel pipe.
*10: Attach the engine harness fixing clip to the fixing boss on the cylinder block.
*11: Route over the heater pipe stay.
*12: Securely install the engine harness fixing stay.
*13: Route outside the fuel pipe.
*14: Attach the engine harness fixing clip to the fixing stay on the intake manifold.

GETtheMANUALS.org

Engine harness assembly diagram 2

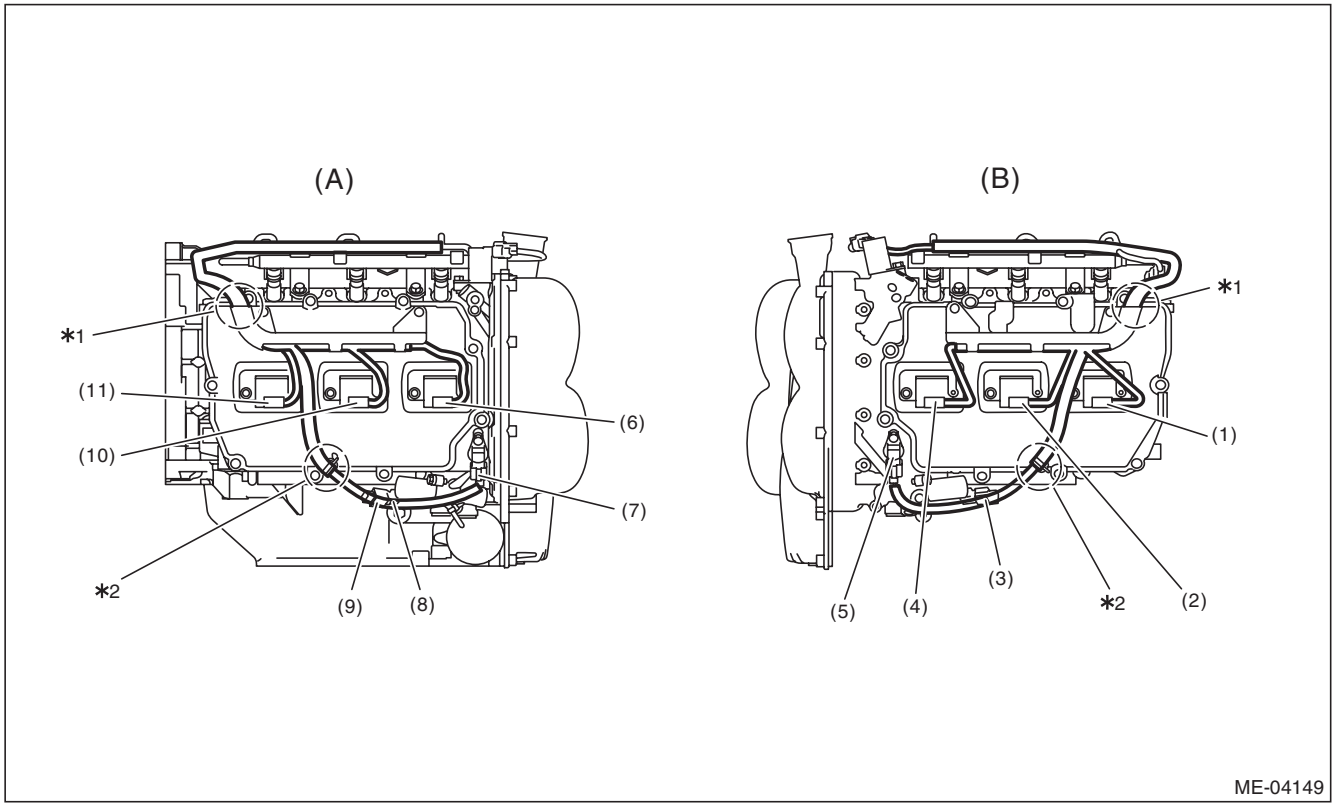

(A)	Right side of the engine	(B)	Left side of the engine		
(1)	#6 ignition coil connector	(5)	Exhaust camshaft position sensor LH connector	(9)	Exhaust oil flow control valve solenoid RH connector
(2)	#4 ignition coil connector	(6)	#1 injector connector	(10)	#3 ignition coil connector
(3)	Exhaust oil flow control valve solenoid LH connector	(7)	Exhaust camshaft position sensor RH connector	(11)	#5 ignition coil connector
(4)	#2 ignition coil connector	(8)	Oil pressure switch connector		

*1: Align the engine harness stay end with the end of engine harness identification tape.
*2: Attach the engine harness fixing clip to the fixing boss on the rocker cover.

GETtheMANUALS.org

9. ENGINE MOUNTING

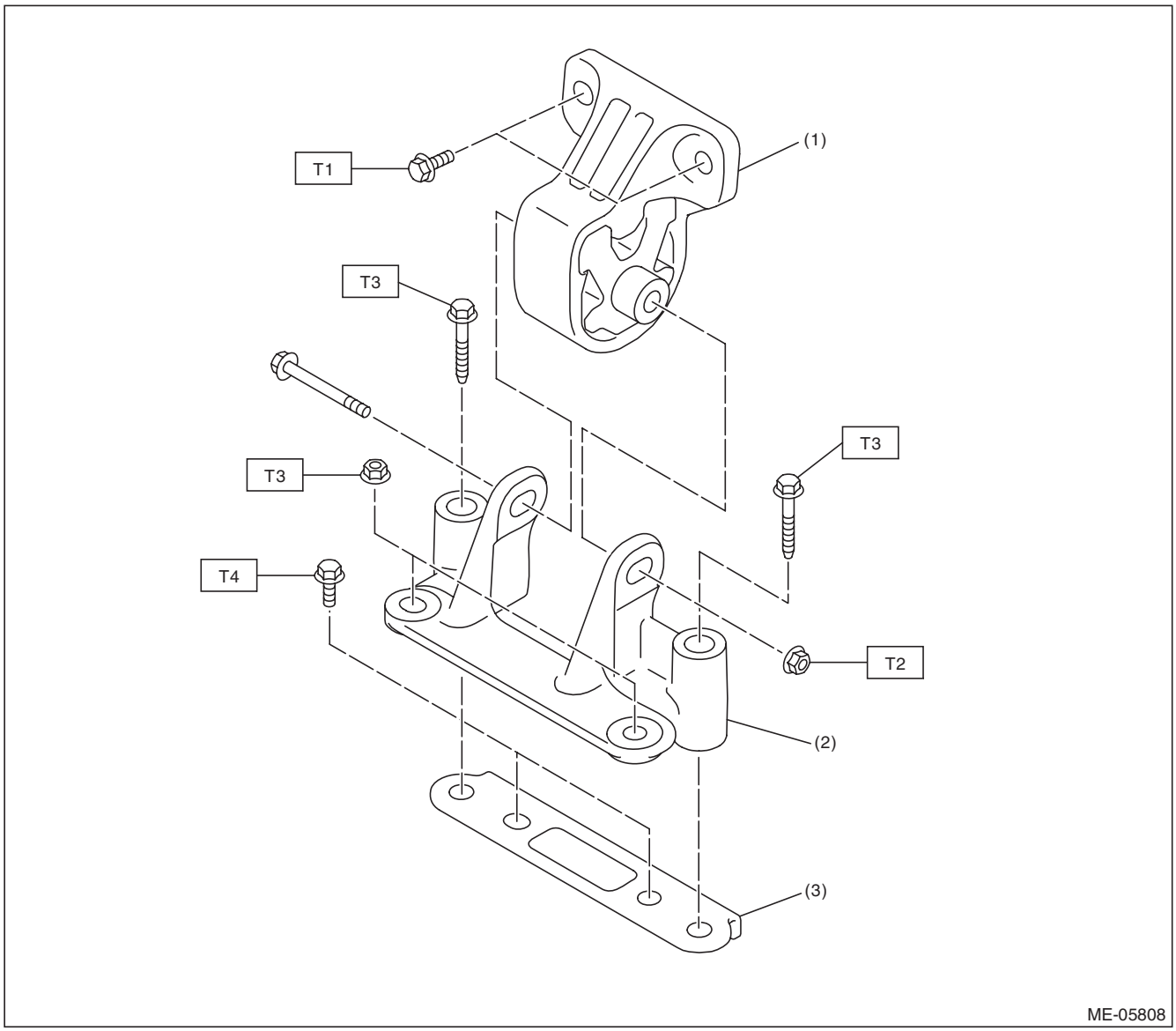

(1) Front mount
(2) Front mounting bracket
(3) Bracket

Tightening torque:N·m (kgf-m, ft-lb)

T1: 25 (2.5, 18.4)
T2: 45 (4.6, 33.2)
T3: 60 (6.1, 44.3)
T4: 65 (6.6, 47.9)

GETtheMANUALS.org

C: CAUTION

- Wear appropriate work clothing, including a cap, protective goggles and protective shoes when performing any work.
- Remove contamination including dirt and corrosion before removal, installation or disassembly.
- Keep the disassembled parts in order and protect them from dust and dirt.
- Before removal, installation or disassembly, be sure to clarify the failure. Avoid unnecessary removal, installation, disassembly and replacement.
- Vehicle components are extremely hot after driving. Be wary of receiving burns from heated parts.
- Be sure to tighten fasteners including bolts and nuts to the specified torque.
- Place shop jacks or rigid racks at the specified points.
- Before disconnecting connectors of sensors or units, be sure to disconnect the ground cable from battery.
- All parts should be thoroughly cleaned, paying special attention to engine oil passages, pistons and bearings.
- Before applying liquid gasket, completely remove the old liquid gasket and degrease it.
- Rotating parts and sliding parts such as piston, bearing and gear should be coated with oil prior to assembly.
- All removed parts, if to be reused, should be reinstalled in the original positions and directions.
- Bolts, nuts and washers should be replaced with new parts as required.
- Even if necessary inspections have been made in advance, proceed with assembly work while making rechecks.
- Remove or install the engine in an area where chain hoists, lifting devices, etc. are available for ready use.
- Be sure not to damage coated surfaces of body panels with tools, or not to stain seats and windows with coolant or oil. Place a cover over fender, as required, for protection.
- Prior to starting work, prepare the following:

Service tools, clean cloth, containers to catch coolant and oil, wire ropes, chain hoist, transmission jacks, etc.

- Lift up or lower the vehicle when necessary. Make sure to support the correct positions.

D: PREPARATION TOOL

1. SPECIAL TOOL

ILLUSTRATION	TOOL NUMBER	DESCRIPTION	REMARKS
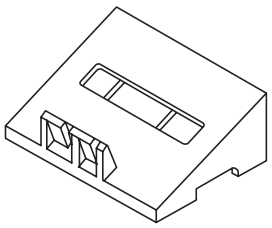 ST18250AA010	18250AA010	CYLINDER HEAD TABLE	• Used for replacing valve guides. • Used for removing and installing valve spring.
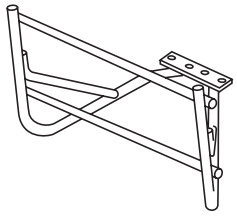 ST18232AA000	18232AA000	ENGINE STAND	Used for disassembling and assembling engine.

GETtheMANUALS.org

ILLUSTRATION	TOOL NUMBER	DESCRIPTION	REMARKS
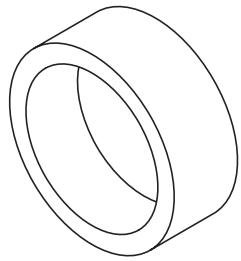 ST-398744300	398744300	PISTON GUIDE	Used for installing piston in cylinder.
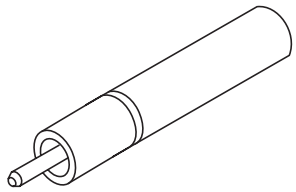 ST18261AA010	18261AA010	VALVE OIL SEAL GUIDE	Used for press-fitting of intake valve guide oil seals and exhaust valve guide oil seals.
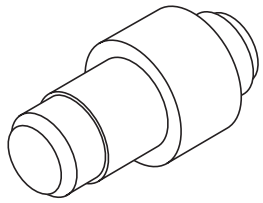 ST18350AA000	18350AA000	CONNECTING ROD BUSHING REMOVER AND INSTALLER	Used for removing and installing connecting rod bushing.
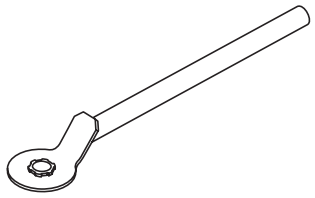 ST-499977500	499977500	CAM SPROCKET WRENCH	Used for removing and installing cam sprocket.
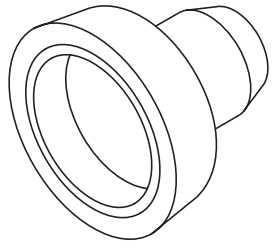 ST-499587200	499587200	CRANKSHAFT OIL SEAL INSTALLER	• Used for installing crankshaft oil seal. • Used together with CRANKSHAFT OIL SEAL GUIDE (499597100).

GETtheMANUALS.org

ILLUSTRATION	TOOL NUMBER	DESCRIPTION	REMARKS
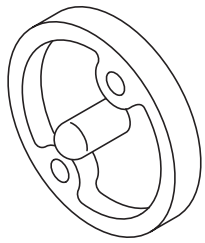 ST-499597100	499597100	CRANKSHAFT OIL SEAL GUIDE	• Used for installing crankshaft oil seal. • Used together with CRANKSHAFT OIL SEAL INSTALLER (499587200).
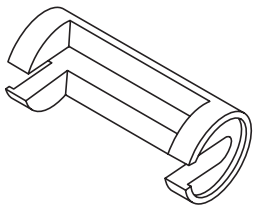 ST-499718000	499718000	VALVE SPRING REMOVER	Used for removing and installing valve spring.
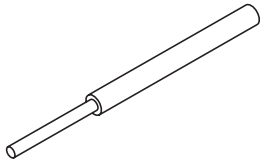 ST-499765700	499765700	VALVE GUIDE REMOVER	Used for removing valve guides.
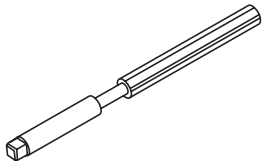 ST-499765900	499765900	VALVE GUIDE REAMER	Used for reaming valve guides.
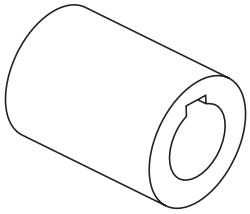 ST18252AA000	18252AA000	CRANKSHAFT SOCKET	Used for rotating crankshaft.

GETtheMANUALS.org

ILLUSTRATION	TOOL NUMBER	DESCRIPTION	REMARKS
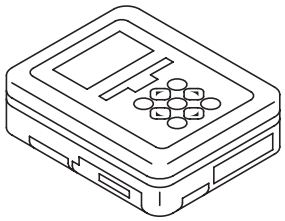 ST1B022XU0	1B022XU0	SUBARU SELECT MONITOR III KIT	Used for various inspections.
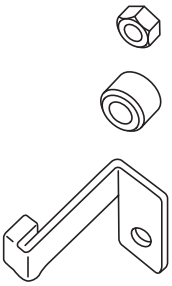 ST-498277200	498277200	STOPPER SET	Used for installing automatic transmission assembly to engine.
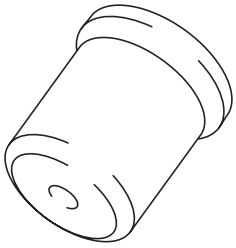 ST-499585700	499585700	OIL SEAL GUIDE	Used for installing the chain cover oil seal.
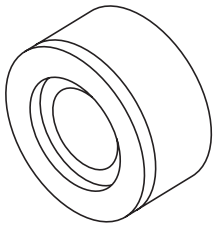 ST18251AA050	18251AA050	VALVE GUIDE ADJUSTER	Used for installing intake valve guides.
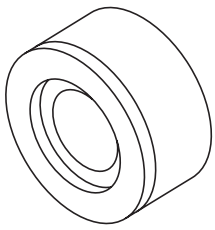 ST18251AA060	18251AA060	VALVE GUIDE ADJUSTER	Used for installing exhaust valve guides.

GETtheMANUALS.org

ILLUSTRATION	TOOL NUMBER	DESCRIPTION	REMARKS
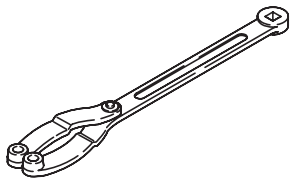 ST18355AA000	18355AA000	PULLEY WRENCH	• Used for removing and installing the crank pulley. • Used for removing and installing the idler sprocket. • Used together with PULLEY WRENCH PIN SET (18334AA000).
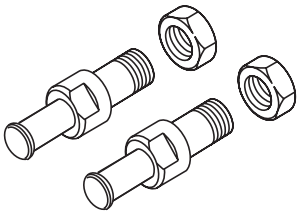 ST18334AA000	18334AA000	PULLEY WRENCH PIN SET	• Used for removing and installing the crank pulley. • Used for removing and installing the idler sprocket. • Used together with PULLEY WRENCH (18355AA000).
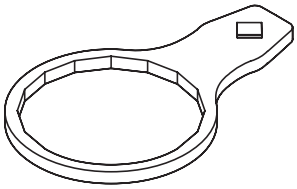 ST18332AA020	18332AA020	OIL FILTER WRENCH	Used for removing and installing oil filter.
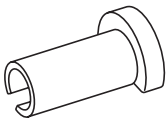 ST42099AE000	42099AE000	QUICK CONNECTOR RELEASE	Used for disconnecting quick connector of the engine compartment.
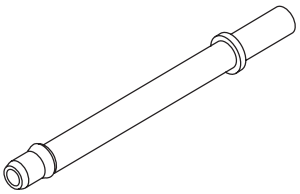 ST18471AA000	18471AA000	FUEL PIPE ADAPTER	Used for inspecting the fuel pressure.

GETtheMANUALS.org

ILLUSTRATION	TOOL NUMBER	DESCRIPTION	REMARKS
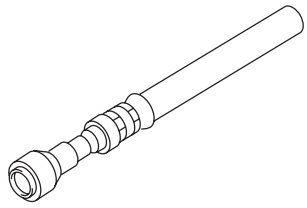 ST42075AG690	42075AG690	FUEL HOSE	Used for inspecting the fuel pressure. NOTE: This is the SUBARU genuine part.
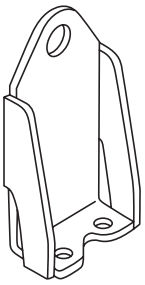 ST18360AA020	18360AA020	HANGER	Used for hanging the engine.

2. GENERAL TOOL

TOOL NAME	REMARKS
Compression gauge	Used for inspecting compression pressure.
Timing light	Used for inspecting the ignition timing.
Vacuum gauge	Used for inspecting intake manifold vacuum.
Oil pressure gauge	Used for inspecting engine oil pressure.
Fuel pressure gauge	Used for inspecting fuel pressure.
TORX® socket (E12)	Used for removing and installing connecting rod cap.

GETtheMANUALS.org

2. Compression

A: INSPECTION

CAUTION:
After warming-up, engine becomes very hot. Be careful not to burn yourself during measurement.

1) Remove the collector cover.

NOTE:
Follow the steps below when removing the collector cover.
(1) Pull up the two points at the rear (A).
(2) Pull up the two points at the front (B) while moving them forward.

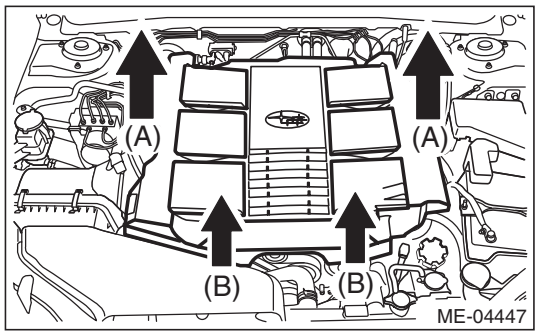

2) After warming-up the engine, turn the ignition switch to OFF.
3) Make sure that the battery is fully charged.
4) Remove the fuse of fuel pump from main fuse box.

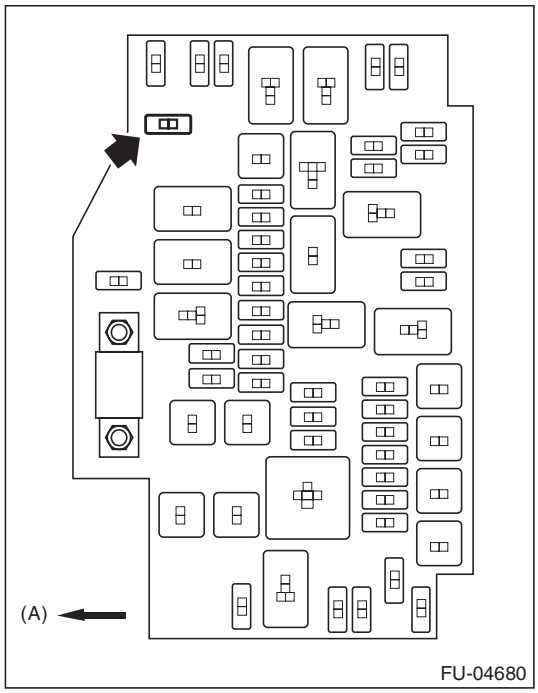

(A) Front side

5) Start the engine and run it until it stalls.
6) After the engine stalls, crank it for five more seconds.
7) Turn the ignition switch to OFF.
8) Remove all spark plugs. <Ref. to IG(H6DO)-4, REMOVAL, Spark Plug.>
9) Fully open the throttle valve.
10) Check the starter motor for satisfactory performance and operation.
11) Secure the compression gauge tightly against the spark plug hole.

NOTE:
When using a screw-in type compression gauge, the screw should be less than 18 mm (0.71 in) long.

12) Crank the engine by the starter motor, and read the maximum value on the gauge when the needle of gauge is steady.

NOTE:
- Perform at least two measurements per cylinder, and make sure that the values are correct.
- If the compression pressure is out of standard, check or adjust the pistons, valves and cylinders.

Compression (350 rpm and fully open throttle):
Standard
1,275 — 1,471 kPa (13.0 — 15.0 kgf/cm^2, 185 — 213 psi)
Limit
1,128 kPa (11.5 kgf/cm^2, 164 psi)
Difference between cylinders
49 kPa (0.5 kgf/cm^2, 7 psi) or less

13) After inspection, install the related parts in the reverse order of removal.

GETtheMANUALS.org

3. Idle Speed

A: INSPECTION

1) Before checking the idle speed, check the following item:
   (1) Check the air cleaner element is free from clogging, ignition timing is correct, spark plugs are in good condition, and hoses are connected properly.
   (2) Check the malfunction indicator light does not illuminate.
2) Warm up the engine.
3) Read the engine idle speed using Subaru Select Monitor. <Ref. to EN(H6DO)(diag)-35, READ CURRENT DATA FOR ENGINE (NORMAL MODE), OPERATION, Subaru Select Monitor.>

NOTE:
- Idle speed cannot be adjusted manually, because the idle speed is automatically adjusted.
- If idle speed is out of standard, refer to the General Diagnosis Table under “Engine Control System”. <Ref. to EN(H6DO)(diag)-2, Basic Diagnostic Procedure.>

   (1) Check the idle speed when no-loaded. (Headlight, heater fan, rear defroster, radiator fan, A/C and etc. are OFF)

Idle speed (No load and gears in “P” or “N” range):
Standard
700±100 rpm

   (2) Check the idle speed when loaded. (Turn the A/C switch to “ON” and operate the compressor for at least one minute before measurement.)

Idle speed (A/C ON and gear in “P” or “N” range):
Standard
700 — 910±100 rpm

GETtheMANUALS.org

4. Ignition Timing

A: INSPECTION

CAUTION:
After warming-up, engine becomes very hot. Be careful not to burn yourself at measurement.

1. METHOD WITH SUBARU SELECT MONITOR

1) Before checking the ignition timing, check the following item:
   (1) Check the air cleaner element is free from clogging, spark plugs are in good condition, and hoses are connected properly.
   (2) Check the malfunction indicator light does not illuminate.
2) Warm up the engine.
3) Read the ignition timing using Subaru Select Monitor. <Ref. to EN(H6DO)(diag)-35, READ CURRENT DATA FOR ENGINE (NORMAL MODE), OPERATION, Subaru Select Monitor.>

NOTE:
If ignition timing is out of standard, check the ignition control system. Refer to “Engine Control System”. <Ref. to EN(H6DO)(diag)-2, Basic Diagnostic Procedure.>

Ignition timing [BTDC/rpm]:
Standard
15°±8°/700

2. METHOD WITH TIMING LIGHT

1) Before checking the ignition timing, check the following item:
   (1) Check the air cleaner element is free from clogging, spark plugs are in good condition, and hoses are connected properly.
   (2) Check the malfunction indicator light does not illuminate.
2) Warm up the engine.
3) Stop the engine, and turn the ignition switch to OFF.
4) Remove the collector cover.

NOTE:
Follow these procedures for removal of the collector cover.
   (1) Lift up the rear side holding two positions (A).
   (2) Lift up the front side holding two positions (B) while moving it in the forward direction of the vehicle.

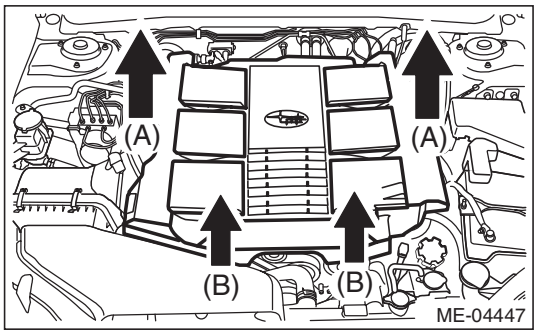

5) Disconnect the ground cable from battery.
6) Remove the air intake duct. <Ref. to IN(H6DO)-8, REMOVAL, Air Intake Duct.>
7) Disconnect the connector from mass air flow and intake air temperature sensor.
8) Remove the air cleaner case and element.
9) Connect the timing light to the power wire of #1 ignition coil.
10) Install the connectors of air cleaner case, element, and the mass air flow and intake air temperature sensor.
11) Connect the ground cable to battery.
12) Start the engine, turn the timing light to the crank pulley, and check the ignition timing through the chain cover gauge.

NOTE:
If ignition timing is out of standard, check the ignition control system. Refer to “Engine Control System”. <Ref. to EN(H6DO)(diag)-2, Basic Diagnostic Procedure.>

Ignition timing [BTDC/rpm]:
Standard
15°±8°/700

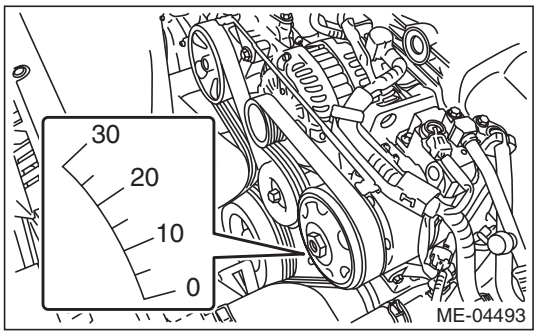

13) After inspection, install the related parts in the reverse order of removal.

GETtheMANUALS.org

5. Intake Manifold Vacuum

A: INSPECTION

1) Warm up the engine.
2) Remove the collector cover.

NOTE:
Follow the steps below when removing the collector cover.
(1) Pull up the two points at the rear (A).
(2) Pull up the two points at the front (B) while moving them forward.

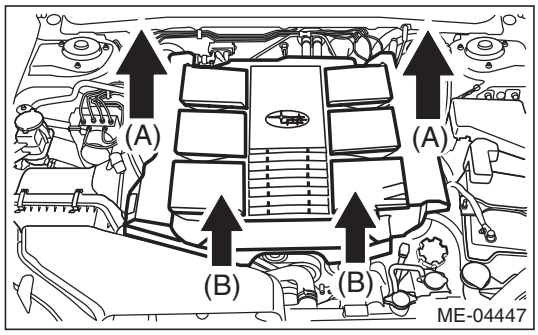

3) Disconnect the brake booster vacuum hose from the intake manifold, and attach the vacuum gauge.

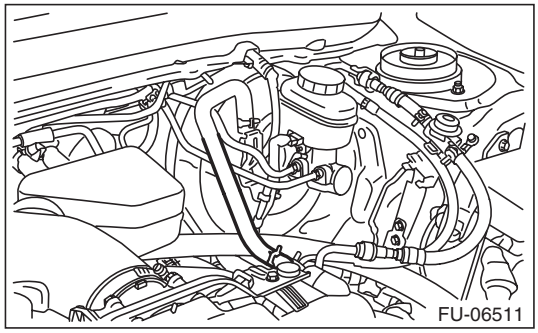

4) Keep the engine at idle speed and read the vacuum gauge indication.

NOTE:
Condition of engine inside can be diagnosed by observing the behavior of the vacuum gauge needle as described in table below.

Intake manifold vacuum (at idling, A/C OFF):
Standard
Less than –60.0 kPa (–450 mmHg, –17.72 inHg)

5) After inspection, install the related parts in the reverse order of removal.

Diagnosis of engine condition by measurement of intake manifold vacuum	
Vacuum gauge indication	Possible engine condition
1. Needle is steady but lower than standard value. This tendency becomes more evident as engine temperature rises.	Leakage around intake manifold gasket, disconnection or damage of vacuum hose
2. Needle intermittently drops to position lower than standard value.	Leakage around cylinder
3. Needle drops suddenly and intermittently from standard value.	Sticky valve
4. When engine speed is gradually increased, needle begins to vibrate rapidly at certain speed, and then vibration increases as engine speed increases.	Weak or broken valve springs
5. Needle vibrates above and below standard value in narrow range.	Defective ignition system

GETtheMANUALS.org

6. Engine Oil Pressure

A: INSPECTION

1) Disconnect the ground cable from battery.
2) Remove the oil pressure switch from the oil pan upper. <Ref. to LU(H6DO)-14, REMOVAL, Oil Pressure Switch.>
3) Attach the oil pressure gauge to the oil pan upper.
4) Connect the battery ground terminal.
5) Start the engine, and check the oil pressure.

NOTE:
- If the oil pressure is out of specification, check oil pump, oil filter and lubrication line. <Ref. to LU(H6DO)-24, Engine Lubrication System Trouble in General.>
- If the oil pressure warning light is ON and oil pressure is within specification, check the oil pressure switch. <Ref. to LU(H6DO)-7, Oil Pressure System.> <Ref. to LU(H6DO)-14, Oil Pressure Switch.>

Engine oil pressure (at oil temperature of 120°C (248°F)):
Standard
98 kPa (1.0 kgf/cm^2, 14 psi) or more (at 600 rpm)
392 kPa (4.0 kgf/cm^2, 57 psi) or more (at 6,000 rpm)

6) After inspection, install the related parts in the reverse order of removal.

GETtheMANUALS.org

7. Fuel Pressure

A: INSPECTION

CAUTION:
- **Before removing the fuel pressure gauge, release the fuel pressure.**
- **Be careful not to spill fuel.**
- **Catch the fuel from hoses using a container or cloth.**

1) Remove the collector cover.

NOTE:
Follow the steps below when removing the collector cover.
(1) Pull up the two points at the rear (A).
(2) Pull up the two points at the front (B) while moving them forward.

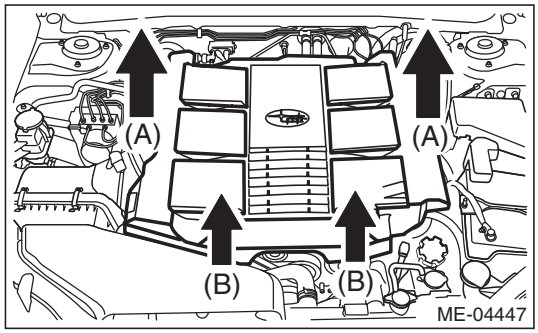

2) Release the fuel pressure. <Ref. to FU(H6DO)-59, RELEASING OF FUEL PRESSURE, PROCEDURE, Fuel.>
3) Open the fuel filler lid and remove the fuel filler cap.
4) Disconnect the fuel delivery hose from fuel damper, and connect fuel pressure gauge.

CAUTION:
- **Be careful not to spill fuel.**
- **Catch the fuel from hoses using a container or cloth.**

(1) Attach ST to the fuel delivery pipe and push ST in the direction of arrow mark to disconnect the quick connector of the fuel delivery hose.

ST 42099AE000 QUICK CONNECTOR RELEASE

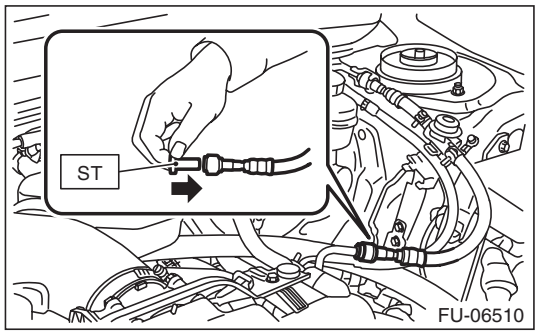

(2) Connect the fuel pressure gauge with ST1 and ST2.

NOTE:
ST1 is a SUBARU genuine part.
ST1 42075AG690 FUEL HOSE
ST2 18471AA000 FUEL PIPE ADAPTER

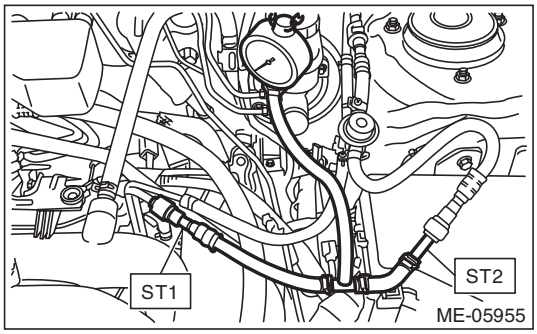

5) Start the engine.
6) Check the fuel pressure after warming up the engine.

NOTE:
- The fuel pressure gauge registers 10 to 20 kPa (0.1 to 0.2 kgf/cm^2, 1 to 3 psi) higher than standard values during high-altitude operations.
- Check or replace the fuel pump and fuel delivery line if the fuel pressure is out of the standard.

Fuel pressure:
Standard
340 — 400 kPa (3.5 — 4.1 kgf/cm^2, 49.3 — 58 psi)

7) After inspection, install the related parts in the reverse order of removal.

GETtheMANUALS.org

8. Valve Clearance

A: INSPECTION

CAUTION:
If engine oil is spilt onto the exhaust pipe, wipe it off with cloth to avoid emission of smoke or causing a fire.

NOTE:
Inspection of valve clearance should be performed while engine is cold.
1) Remove the collector cover.

NOTE:
Follow the steps below when removing the collector cover.
(1) Pull up the two points at the rear (A).
(2) Pull up the two points at the front (B) while moving them forward.

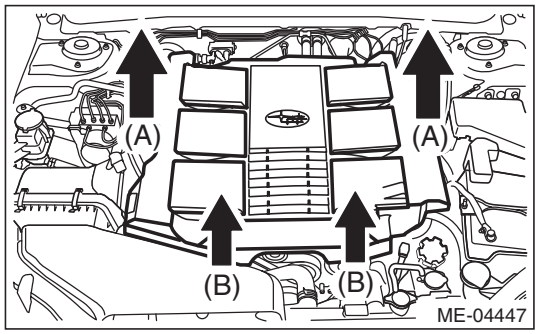

2) Disconnect the ground cable from battery.
3) Lift up the vehicle.
4) Remove the under cover. <Ref. to EI-35, REMOVAL, Front Under Cover.>
5) Lower the vehicle.
6) When inspecting valve clearances for #1, #3 and #5
7) Loosen the clamp (A) which connects the air intake boot assembly.
8) Loosen the bolt (B) which secures the air intake boot assembly to the collector cover bracket.

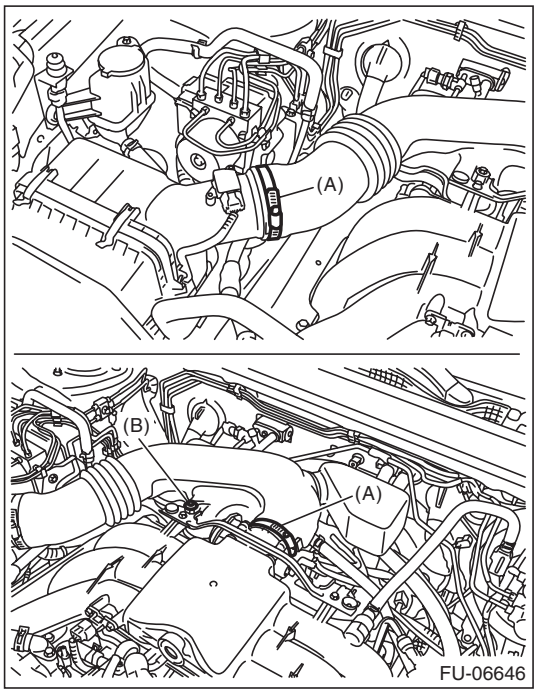

(1) Remove the air intake boot assembly, and move it to the left side wheel apron.

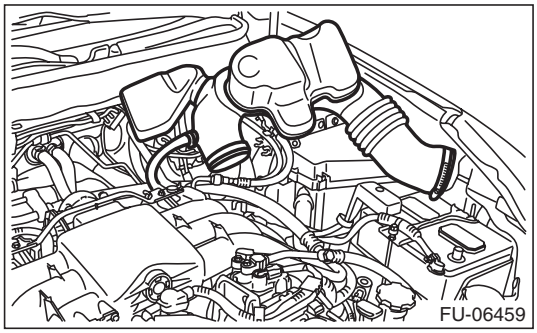

(2) Remove the air intake duct and air cleaner case. <Ref. to IN(H6DO)-8, REMOVAL, Air Intake Duct.> <Ref. to IN(H6DO)-5, REMOVAL, Air Cleaner Case.>
(3) Remove the fuel pipe protector (RH).

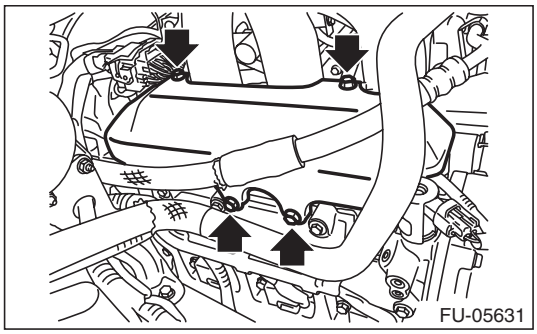

(4) Disconnect the connector of oil pressure switch.

GETtheMANUALS.org

(5) Remove the ignition coil. <Ref. to IG(H6DO)-7, REMOVAL, Ignition Coil.>
(6) Remove the rocker cover (RH). <Ref. to ME(H6DO)-84, REMOVAL, Camshaft.>

9) When inspecting valve clearances for #2, #4 and #6

(1) Remove the battery and battery carrier. <Ref. to SC(H4SO)-28, REMOVAL, Battery.>
(2) Remove two fixing clips on the fuel pipe protector (LH).

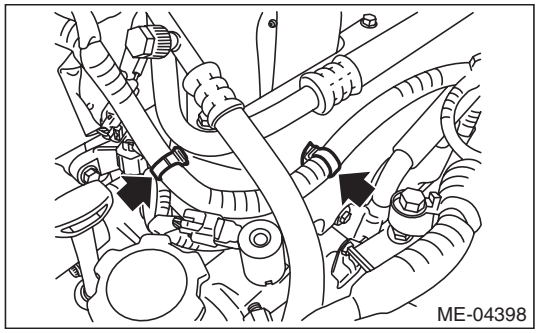

(3) Generator connector
(4) Generator terminal B
(5) Remove the harness cover from collector cover bracket.
(6) A/C compressor solenoid connector
(7) Flow sensor connector

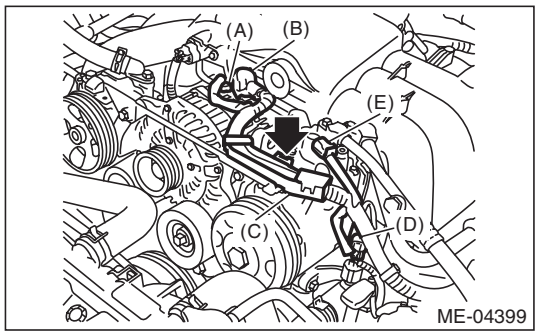

(A) Generator connector
(B) Terminal B
(C) Harness cover
(D) A/C compressor solenoid connector
(E) Flow sensor connector

(8) Slide the harness and connector to the battery side.

(9) Disconnect the PCV hose from rocker cover (LH).

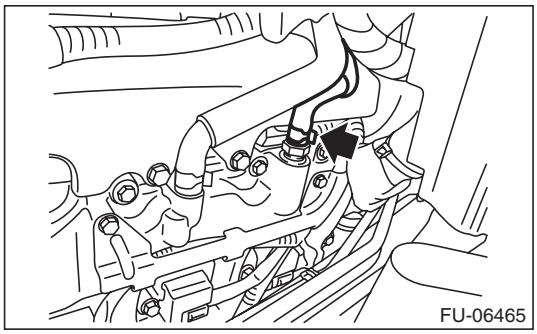

(10) Remove the fuel pipe protector (LH).

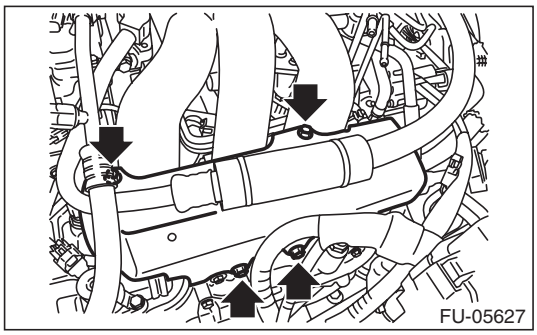

(11) Remove the ignition coil. <Ref. to IG(H6DO)-7, REMOVAL, Ignition Coil.>
(12) Remove the rocker cover (LH). <Ref. to ME(H6DO)-84, REMOVAL, Camshaft.>

10) Turn the crankshaft clockwise until the camshaft is set to position shown in the figure.

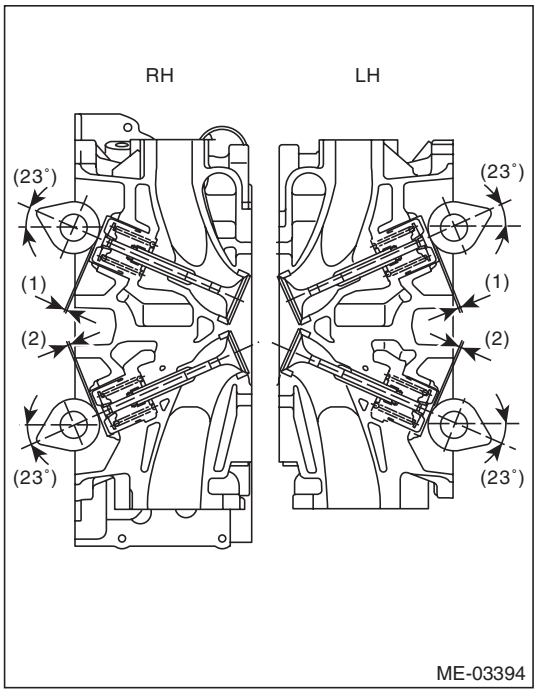

(1) Valve clearance (Intake side)
(2) Valve clearance (Exhaust side)

GETtheMANUALS.org

11) Measure the clearance of intake valve and exhaust valve using thickness gauge (A).

NOTE:
• Measure it within the range of ±30° from specified position shown in the figure.
• Insert a thickness gauge in a direction as horizontal as possible with respect to the valve lifter.

Valve clearance (inspection value):
Intake
$0.20^{+0.04}_{-0.06}$ mm ($0.0079^{+0.0016}_{-0.0024}$ in)
Exhaust
0.35±0.05 mm (0.0138±0.0020 in)

• If the measured value is not within specification, take notes of the value in order to adjust the valve clearance later on.

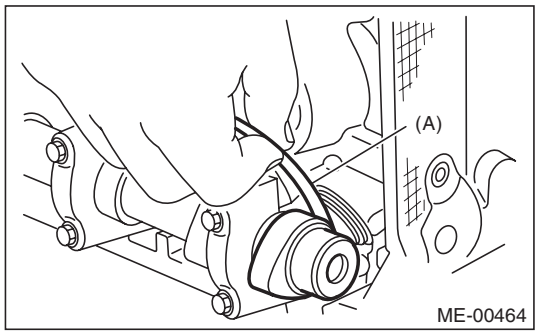

12) If necessary, adjust the valve clearance. <Ref. to ME(H6DO)-34, ADJUSTMENT, Valve Clearance.>
13) Further turn the crank pulley clockwise and then measure the valve clearances again.
14) After inspection, install the related parts in the reverse order of removal. <Ref. to ME(H6DO)-85, INSTALLATION, Camshaft.>

B: ADJUSTMENT

1. INTAKE SIDE

1) Remove the engine from vehicle. <Ref. to ME(H6DO)-36, REMOVAL, Engine Assembly.>
2) Measure all the valve clearances. <Ref. to ME(H6DO)-32, INSPECTION, Valve Clearance.>

NOTE:
Record each valve clearance after measurement.

3) Remove the timing chain assembly. <Ref. to ME(H6DO)-63, REMOVAL, Timing Chain Assembly.>
4) Remove the cam sprocket. <Ref. to ME(H6DO)-82, REMOVAL, Cam Sprocket.>
5) Remove the camshaft. <Ref. to ME(H6DO)-84, REMOVAL, Camshaft.>
6) Remove the valve lifter.
7) Measure the thickness of valve lifter using micrometer.

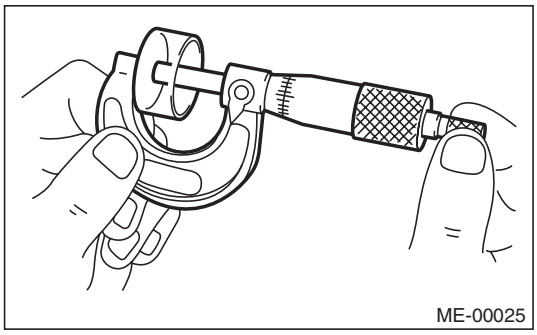

8) Select a valve lifter of suitable thickness using the measured valve clearance and valve lifter thickness, and install it.

NOTE:
Use a new valve lifter.

Unit: mm (in)
S = (V + T) – 0.20 (0.0079)
S: Valve lifter thickness required V: Measured valve clearance T: Current valve lifter thickness

9) Install the camshaft. <Ref. to ME(H6DO)-85, INSTALLATION, Camshaft.>
10) Install the cam sprocket. <Ref. to ME(H6DO)-82, INSTALLATION, Cam Sprocket.>
11) Install the timing chain assembly. <Ref. to ME(H6DO)-69, INSTALLATION, Timing Chain Assembly.>
12) Measure all valve clearance again at this time. If the valve clearance is not within the adjustment value, repeat the procedure from step 3).

Valve clearance (adjustment value):
$0.20^{+0.04}_{-0.06}$ mm ($0.0079^{+0.0016}_{-0.0024}$ in)

13) After adjustment, install the related parts in the reverse order of removal.

NOTE:
Refer to “Camshaft” when installing the rocker cover. <Ref. to ME(H6DO)-85, INSTALLATION, Camshaft.>

GETtheMANUALS.org

2. EXHAUST SIDE

1) Remove the engine from vehicle. <Ref. to ME(H6DO)-36, REMOVAL, Engine Assembly.>
2) Measure all the valve clearances. <Ref. to ME(H6DO)-32, INSPECTION, Valve Clearance.>

NOTE:
Record each valve clearance after measurement.

3) Remove the camshaft. <Ref. to ME(H6DO)-84, REMOVAL, Camshaft.>
4) Remove the valve lifter.
5) Measure the thickness of valve lifter using micrometer.

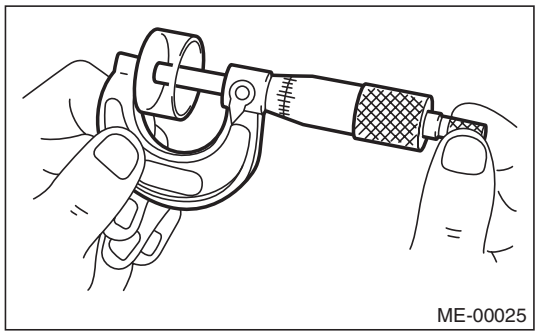

6) Select a valve lifter of suitable thickness using the measured valve clearance and valve lifter thickness, and install it.

NOTE:
Use a new valve lifter.

Unit: mm (in)
S = (V + T) – 0.35 (0.0138)
S: Valve lifter thickness required V: Measured valve clearance T: Current valve lifter thickness

7) Install the camshaft. <Ref. to ME(H6DO)-85, INSTALLATION, Camshaft.>
8) Install the cam sprocket. <Ref. to ME(H6DO)-82, INSTALLATION, Cam Sprocket.>
9) Install the timing chain assembly. <Ref. to ME(H6DO)-69, INSTALLATION, Timing Chain Assembly.>
10) Measure all valve clearance again at this time. If the valve clearance is not within the adjustment value, repeat the procedure from step 3).

Valve clearance (adjustment value):
0.35±0.05 mm (0.0138±0.0020 in)

11) After adjustment, install the related parts in the reverse order of removal.

NOTE:
Refer to “Camshaft” when installing the rocker cover. <Ref. to ME(H6DO)-85, INSTALLATION, Camshaft.>

GETtheMANUALS.org

9. Engine Assembly

A: REMOVAL

1) Change the front hood damper bolt mounting position from (A) to (B), and completely open the front hood.

Tightening torque:
20 N·m (2.0 kgf-m, 14.8 ft-lb)

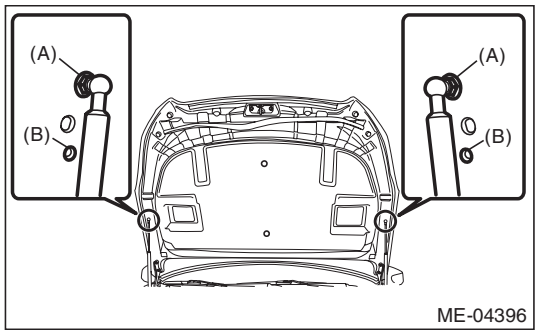

2) Remove the collector cover.

NOTE:
Follow the steps below when removing the collector cover.
(1) Pull up the two points at the rear (A).
(2) Pull up the two points at the front (B) while moving them forward.

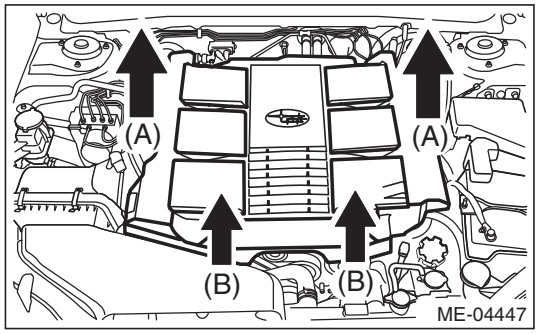

3) Collect the refrigerant from A/C system. <Ref. to AC-24, PROCEDURE, Refrigerant Recovery Procedure.>
4) Release the fuel pressure. <Ref. to FU(H6DO)-59, PROCEDURE, Fuel.>
5) Disconnect the ground cable from battery.
6) Open the fuel filler lid and remove the fuel filler cap.
7) Remove the air intake duct, air cleaner case and air intake boot assembly. <Ref. to IN(H6DO)-8, REMOVAL, Air Intake Duct.> <Ref. to IN(H6DO)-5, REMOVAL, Air Cleaner Case.> <Ref. to IN(H6DO)-7, REMOVAL, Air Intake Boot.>
8) Remove the V-belts. <Ref. to ME(H6DO)-51, REMOVAL, V-belt.>
9) Disconnect the following connector.
(1) Remove two fixing clips on the fuel pipe protector (LH).

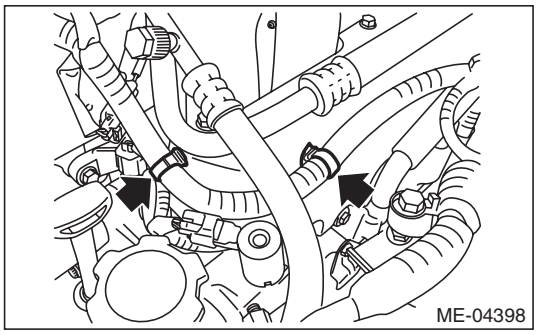

(2) Generator connector
(3) Generator terminal B
(4) Remove the harness cover from collector cover bracket.
(5) A/C compressor solenoid connector
(6) Flow sensor connector

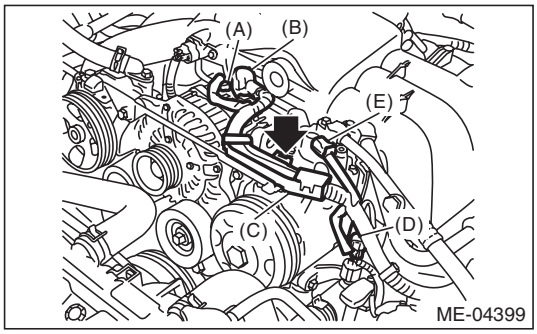

(A) Generator connector
(B) Terminal B
(C) Harness cover
(D) A/C compressor solenoid connector
(E) Flow sensor connector

(7) Slide the harness and connector to the battery side.
10) Remove the power steering pump together with the bracket.

NOTE:
Do not disconnect the hose and pipe from the power steering pump.

GETtheMANUALS.org

(1) Disconnect the manifold absolute pressure sensor connector (A) and power steering pump connector (B).

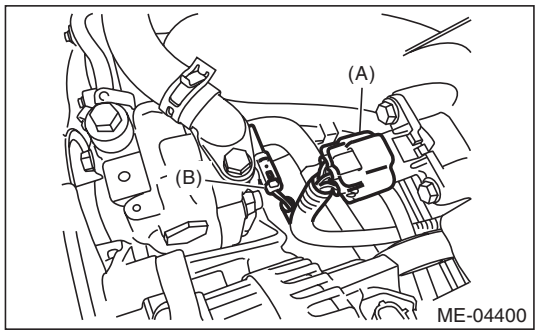

(2) Remove the securing bolts of collector cover bracket and power steering pump bracket.

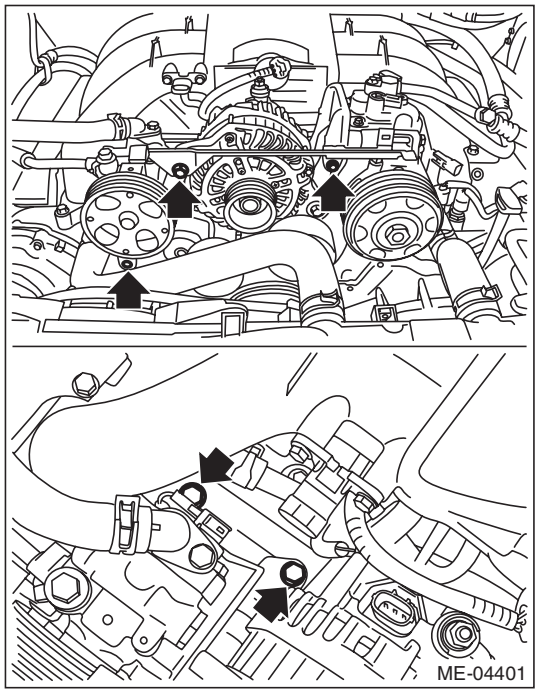

(3) Use a cloth to protect the power steering pump and place it on the RH front strut using a wire.

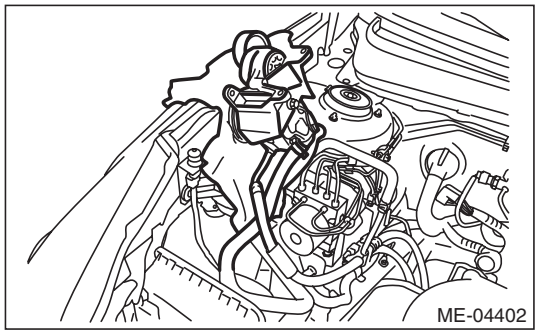

11) Remove the brake booster vacuum hose.

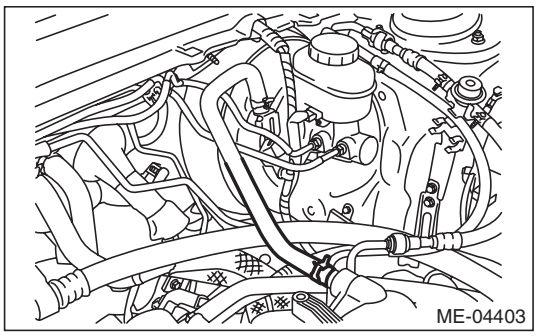

12) Remove the engine ground.

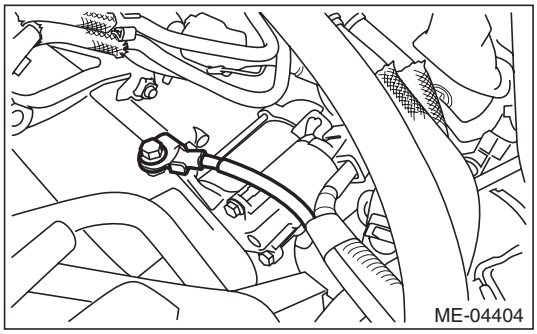

13) Remove the starter harness and engine ground from bracket.

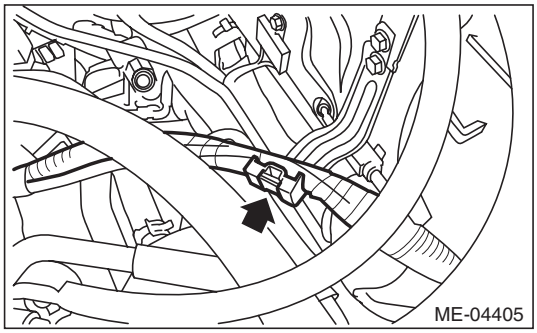

14) Remove the starter. <Ref. to SC(H4SO)-9, REMOVAL, Starter.>
15) Remove the grille bracket.

NOTE:
Remove ten clips when removing the grille bracket.

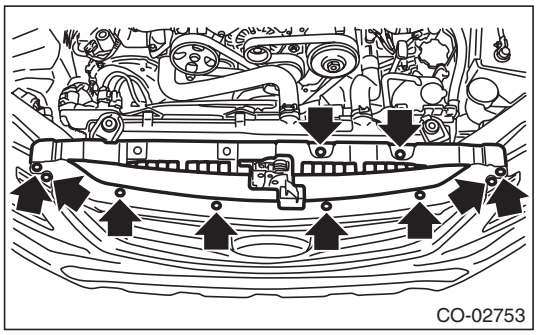

16) Lift up the vehicle.
17) Remove the under cover. <Ref. to EI-35, REMOVAL, Front Under Cover.>

GETtheMANUALS.org

18) Drain engine coolant completely. <Ref. to CO(H6DO)-12, DRAINING OF ENGINE COOLANT, REPLACEMENT, Engine Coolant.>
19) Remove the front exhaust pipe. <Ref. to EX(H6DO)-5, REMOVAL, Front Exhaust Pipe.>
20) Remove the ground cable from the underside of chain cover.

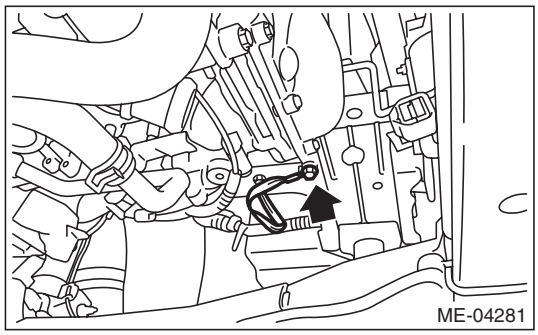
ME-04281

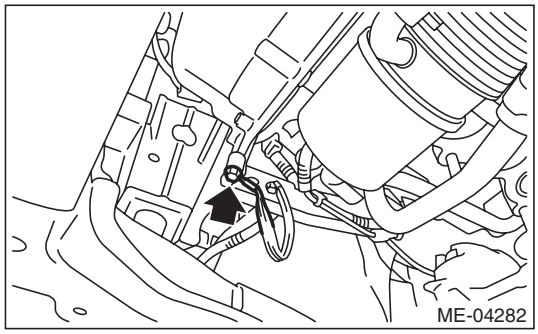
ME-04282

21) Remove the connecting bolts and nuts (lower side) between the engine and transmission.

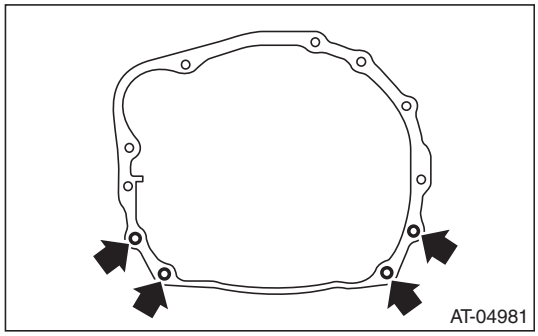
AT-04981

22) Lower the vehicle.
23) Remove the radiator main fan & fan motor and radiator sub fan & fan motor. <Ref. to CO(H6DO)-21, REMOVAL, Radiator Main Fan and Fan Motor.> <Ref. to CO(H6DO)-24, REMOVAL, Radiator Sub Fan and Fan Motor.>
24) Remove the radiator. <Ref. to CO(H6DO)-17, REMOVAL, Radiator.>
25) Remove the heater inlet hose and heater outlet hose.

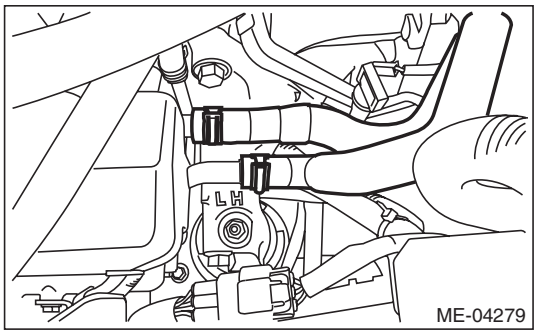

ME-04279

26) Disconnect the engine harness connector.

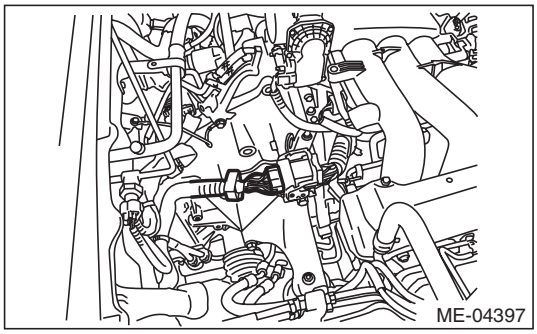
ME-04397

27) Disconnect the connector from the throttle body.

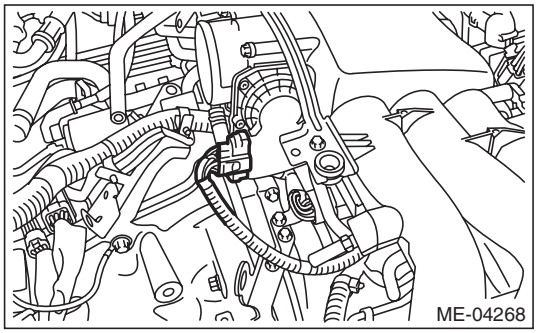
ME-04268

28) Remove the engine harness connector from the engine hanger bracket.

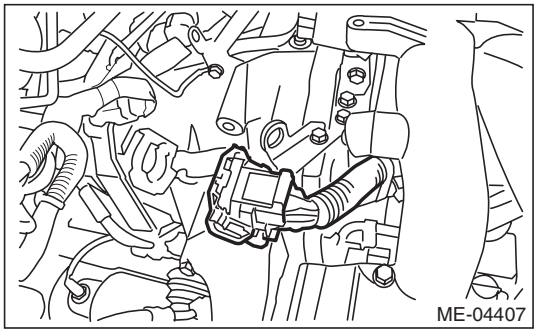
ME-04407

GETtheMANUALS.org

29) Remove the engine hanger bracket.

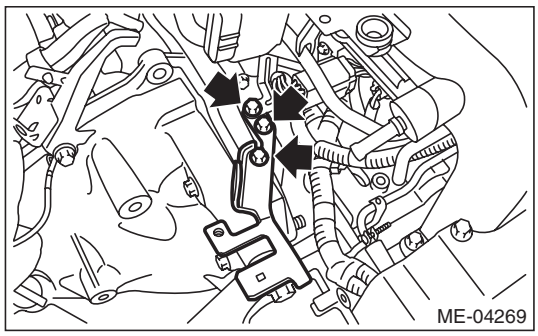

30) Remove the throttle body from the intake manifold.

NOTE:
Do not disconnect the inlet and outlet hoses of engine coolant.

31) Attach the ST.
ST 18360AA020 HANGER

Tightening torque:
19 N·m (1.9 kgf-m, 14.0 ft-lb)

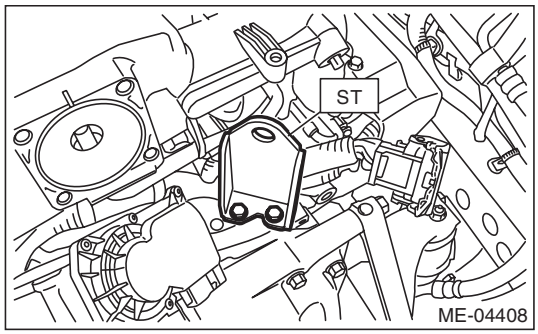

32) Separate the torque converter clutch from drive plate.

(1) Remove the service hole plug.

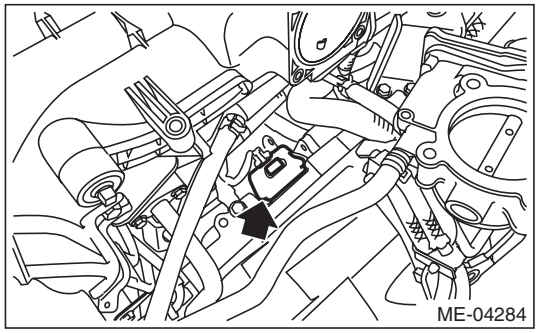

(2) Rotate the clank pulley to align the drive plate to the service hole, and remove four bolts.

33) Disconnect the fuel delivery hose and evaporation hose.

CAUTION:
- **Be careful not to spill fuel.**
- **Catch the fuel from hoses using a container or cloth.**

(1) Attach ST to the fuel delivery pipe and push ST in the direction of arrow mark to disconnect the quick connector of the fuel delivery hose.
ST 42099AE000 QUICK CONNECTOR RELEASE

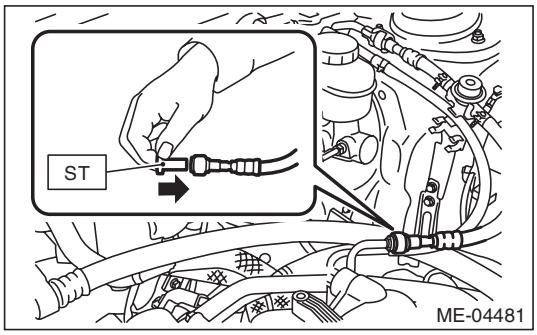

(2) Remove the clip and disconnect the evaporation hose.

34) Disconnect the A/C pressure hoses from A/C compressor. <Ref. to AC-76, REMOVAL, Hose and Pipe.>

35) Remove the connecting bolts (upper side) between engine and transmission.

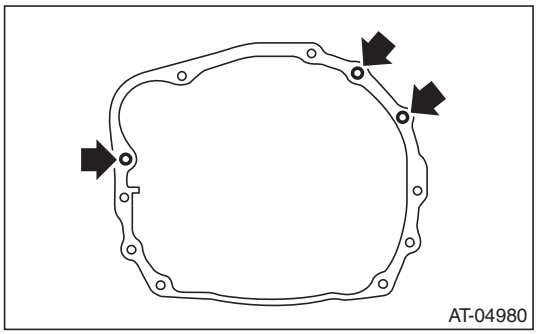

36) Set the ST to torque converter clutch case.
ST 498277200 STOPPER SET

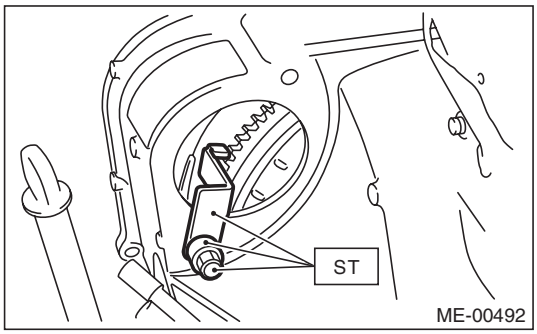

GETtheMANUALS.org

37) Support the engine with a lifting device and wire ropes.

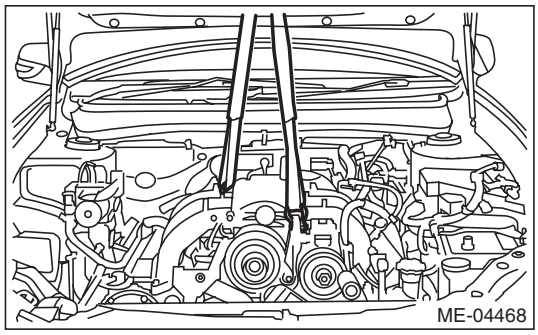

38) Remove the front mount.

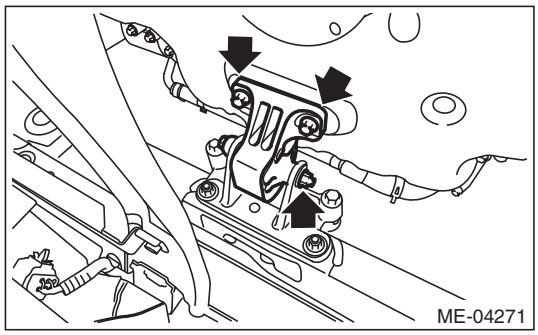

39) Remove the front mounting bracket from the cradle.

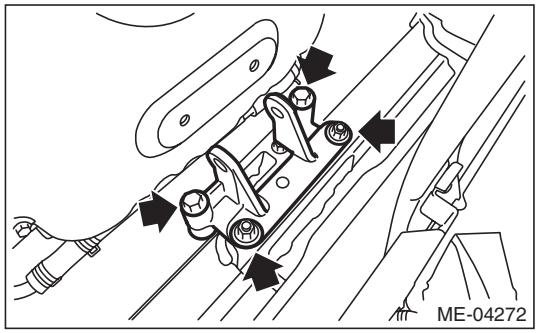

40) Remove the engine from the engine compartment.
   (1) Operate the lifter to set the engine horizontally.
   (2) Move the engine towards the front of the vehicle to disconnect it from the torque converter clutch case.
   (3) Operate the lifter to take out the engine from the engine compartment.

NOTE:
Be careful not to damage adjacent parts or body panels with crank pulley, oil level gauge, etc.

B: INSTALLATION

1) Install the engine to the vehicle.
   (1) Operate the lifter to place the engine in the engine compartment.
   (2) Operate the lifter to set the engine horizontally.
   (3) Move the engine towards the rear of the vehicle to connect it to the torque converter clutch case.

NOTE:
Be careful not to damage adjacent parts or body panels with crank pulley, oil level gauge, etc.

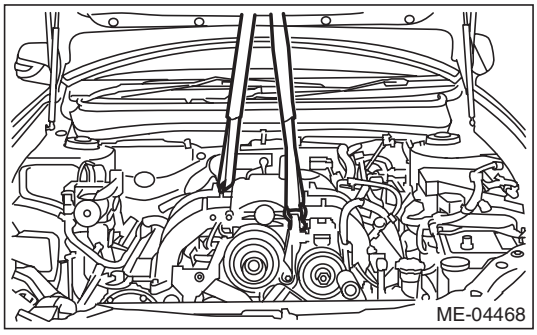

2) Install front mounting bracket to the cradle.

Tightening torque:
60 N·m (6.1 kgf-m, 44.3 ft-lb)

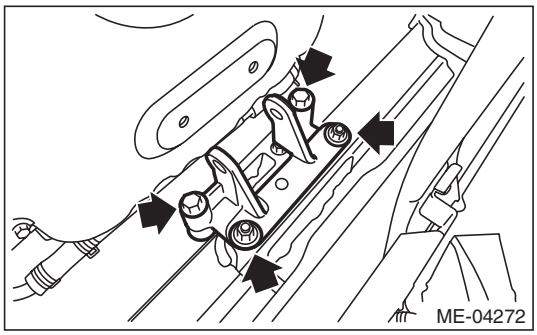

3) Install the front mount.

Tightening torque:
T1: 25 N·m (2.5 kgf-m, 18.4 ft-lb)
T2: 45 N·m (4.6 kgf-m, 33.2 ft-lb)

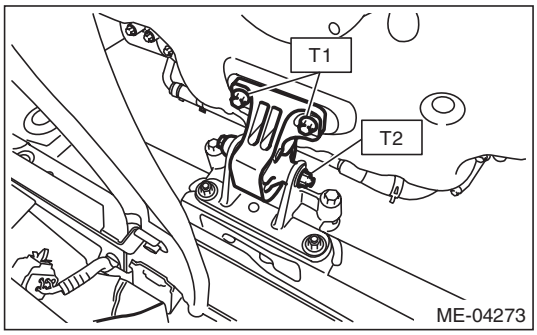

GETtheMANUALS.org

4) Install the connecting bolts (upper side) between engine and transmission.

Tightening torque:
50 N·m (5.1 kgf-m, 36.9 ft-lb)

NOTE:
Make sure there are no gaps in the mating surfaces between engine and transmission. If there are gaps, loosen the connecting bolts, and adjust the position while retightening the bolts.

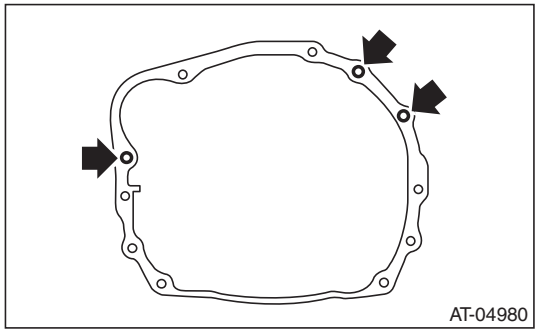

5) Remove the lifting device and wire ropes.
6) Remove the ST from torque converter clutch case.

NOTE:
Be careful not to drop the ST into the torque converter clutch case when removing the ST.

7) Install the radiator. <Ref. to CO(H6DO)-18, INSTALLATION, Radiator.>
8) Install the radiator main fan & fan motor and radiator sub fan & fan motor. <Ref. to CO(H6DO)-22, INSTALLATION, Radiator Main Fan and Fan Motor.> <Ref. to CO(H6DO)-24, INSTALLATION, Radiator Sub Fan and Fan Motor.>
9) Lift up the vehicle.
10) Attach the connecting bolts and nuts (lower side) between the engine and transmission.

Tightening torque:
50 N·m (5.1 kgf-m, 36.9 ft-lb)

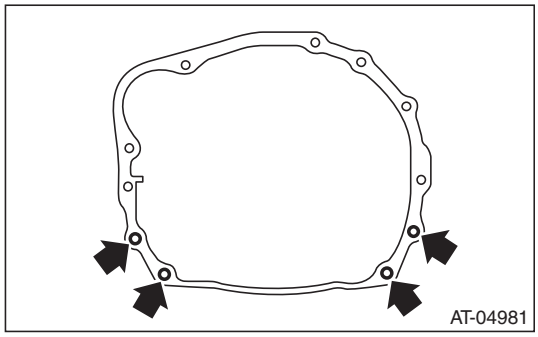

11) Install the ground cable to the underside of chain cover.

Tightening torque:
7.5 N·m (0.8 kgf-m, 5.5 ft-lb)

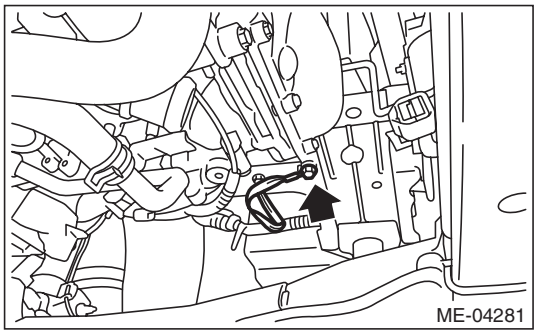

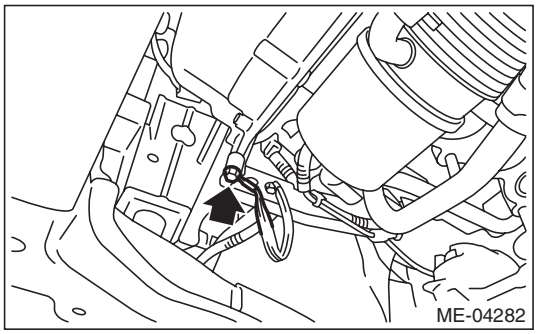

12) Install the front exhaust pipe. <Ref. to EX(H6DO)-6, INSTALLATION, Front Exhaust Pipe.>
13) Install the under cover. <Ref. to EI-35, INSTALLATION, Front Under Cover.>
14) Lower the vehicle.
15) Install the A/C pressure hoses to A/C compressor. <Ref. to AC-76, INSTALLATION, Hose and Pipe.>
16) Connect the fuel delivery hose (A) and evaporation hose (B).

NOTE:
If fuel hoses or clamps are damaged, replace them with new parts.

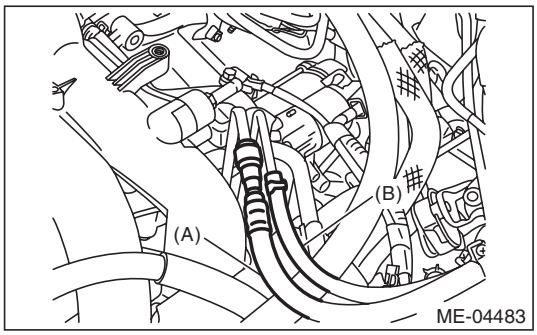

17) Connect the torque converter clutch to the drive plate.
(1) Rotate the clank pulley to align the drive plate to the service hole, and tighten four bolts.

Tightening torque:
25 N·m (2.5 kgf-m, 18.4 ft-lb)

GETtheMANUALS.org

(2) Install the service hole plug.

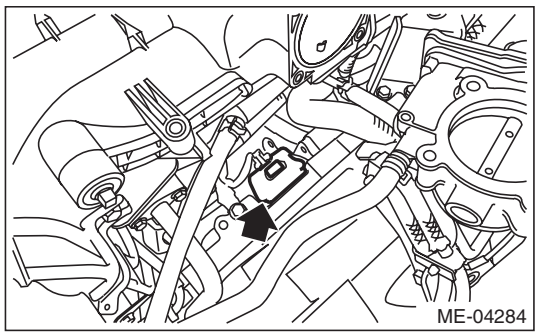

18) Remove the ST.

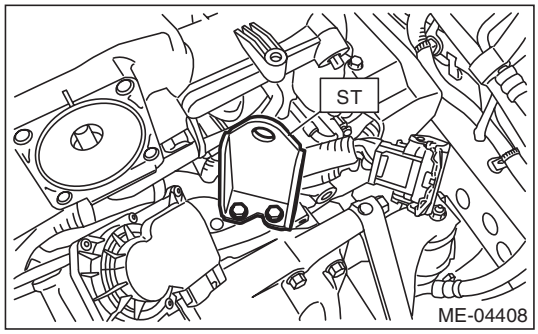

19) Install the throttle body to intake manifold.

NOTE:
Use a new gasket.

Tightening torque:
8 N·m (0.8 kgf-m, 5.9 ft-lb)

20) Install the engine hanger bracket.

Tightening torque:
19 N·m (1.9 kgf-m, 14.0 ft-lb)

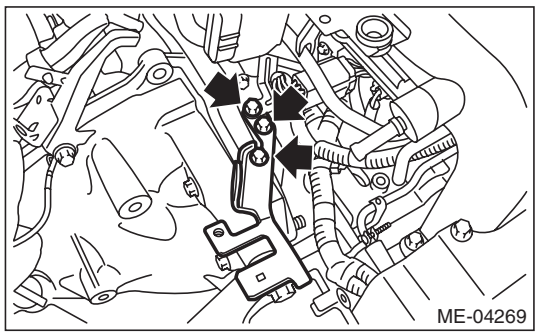

21) Install the engine harness connector to the engine hanger bracket.

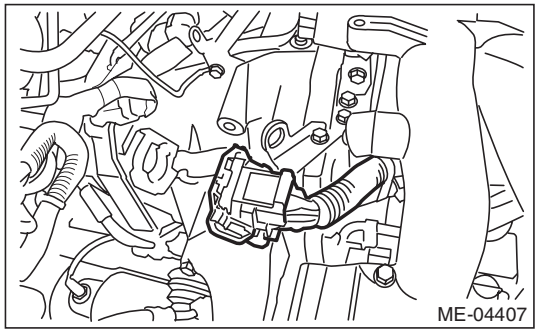

22) Connect the connector to the throttle body.

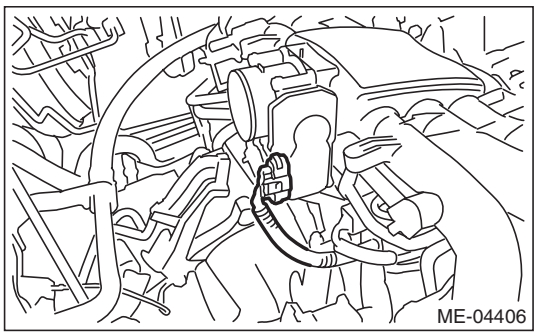

23) Connect the engine harness.

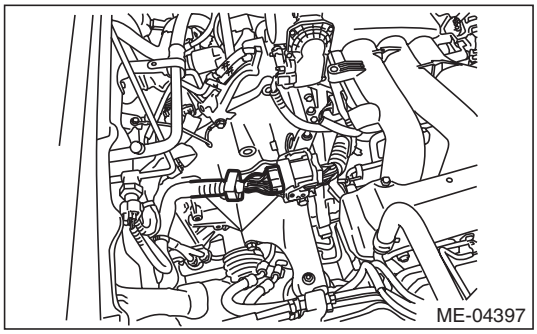

24) Install the heater inlet hose and heater outlet hose.

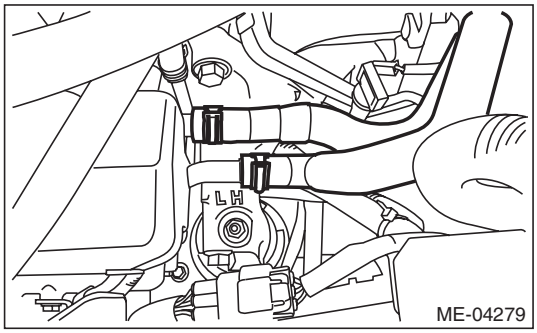

25) Attach the grille bracket.

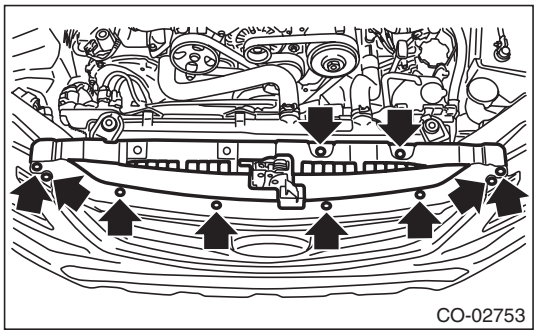

26) Install the starter. <Ref. to SC(H4SO)-10, INSTALLATION, Starter.>

GETtheMANUALS.org

27) Install the starter harness and engine ground to the bracket.

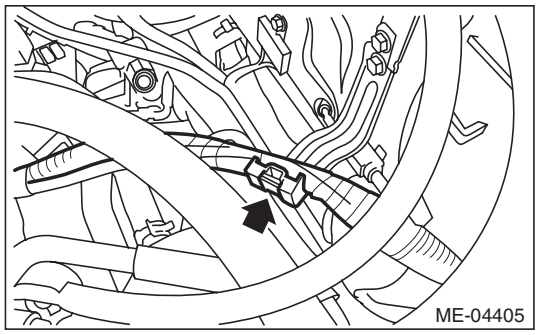

28) Install the engine ground.

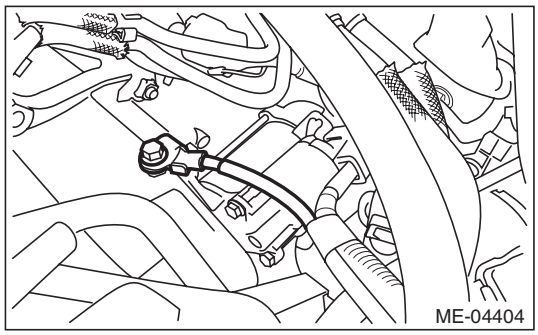

29) Install the brake booster vacuum hose.

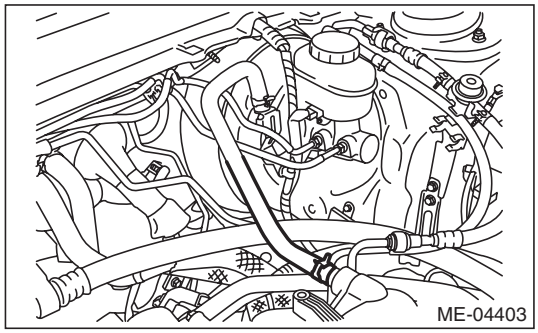

30) Install the power steering pump together with the bracket.

(1) Install the power steering pump and power steering pump bracket to the cylinder block.

(2) Install the collector cover bracket and power steering pump bracket.

Tightening torque:

T1: 6.4 N·m (0.7 kgf-m, 4.7 ft-lb)
T2: 25 N·m (2.5 kgf-m, 18.4 ft-lb)
T3: 33 N·m (3.4 kgf-m, 24.3 ft-lb)

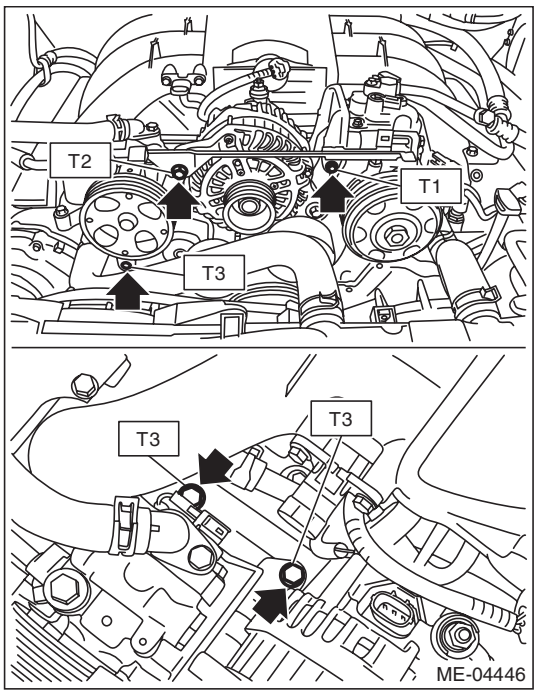

(3) Connect the manifold absolute pressure sensor connector (A) and power steering pump connector (B).

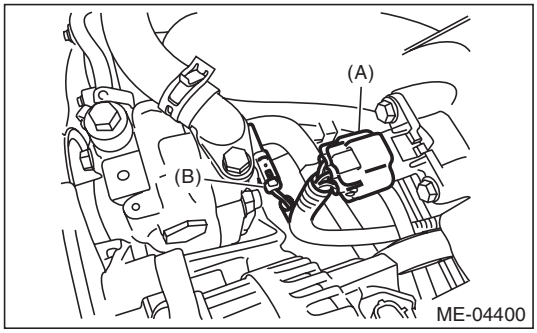

31) Connect the following connectors.

(1) Generator connector

(2) Generator terminal B

Tightening torque:

16 N·m (1.6 kgf-m, 11.8 ft-lb)

(3) Install the harness cover to the collector cover bracket.

(4) A/C compressor solenoid connector

GETtheMANUALS.org

(5) Flow sensor connector

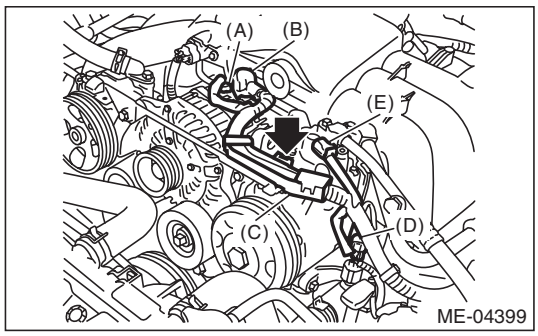

(A) Generator connector
(B) Generator terminal B
(C) Install the harness cover to the collector cover bracket.
(D) A/C compressor solenoid connector
(E) Flow sensor connector

(6) Install with the securing clips to the two locations on the fuel pipe protector (LH).

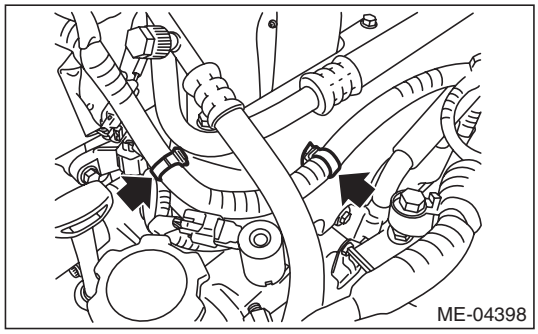

32) Install the V-belts. <Ref. to ME(H6DO)-51, INSTALLATION, V-belt.>
33) Install the air intake duct, air cleaner case and air intake boot assembly. <Ref. to IN(H6DO)-8, INSTALLATION, Air Intake Duct.> <Ref. to IN(H6DO)-5, INSTALLATION, Air Cleaner Case.> <Ref. to IN(H6DO)-7, INSTALLATION, Air Intake Boot.>
34) Connect the ground cable to battery.
35) Fill engine coolant. <Ref. to CO(H6DO)-12, FILLING OF ENGINE COOLANT, REPLACEMENT, Engine Coolant.>
36) Charge the A/C system with refrigerant. <Ref. to AC-25, PROCEDURE, Refrigerant Charging Procedure.>
37) Check the ATF level and replenish it if necessary. <Ref. to 5AT-29, INSPECTION, Automatic Transmission Fluid.>
38) Install the collector cover.
39) Change the front hood damper bolt mounting position from (B) to (A), and completely close the front hood.

Tightening torque:
20 N·m (2.0 kgf-m, 14.8 ft-lb)

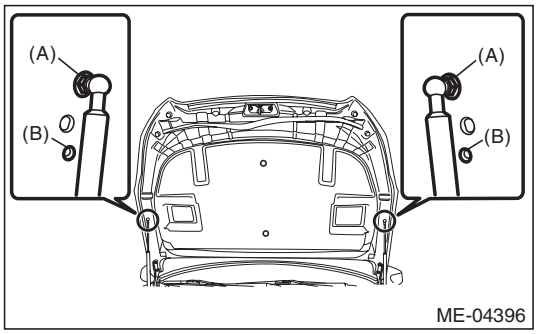

C: INSPECTION

1) Check that the pipes, hoses, connectors and clips are securely connected.
2) Check that the engine coolant is up to specified level.
3) Check that the ATF is up to specified level.
4) Start the engine and check for exhaust gas, engine coolant, leaks of fuel, etc. Also check for noise and vibrations.

GETtheMANUALS.org

10. Engine Mounting

A: REMOVAL

1) Change the front hood damper bolt mounting position from (A) to (B), and completely open the front hood.

Tightening torque:
20 N·m (2.0 kgf-m, 14.8 ft-lb)

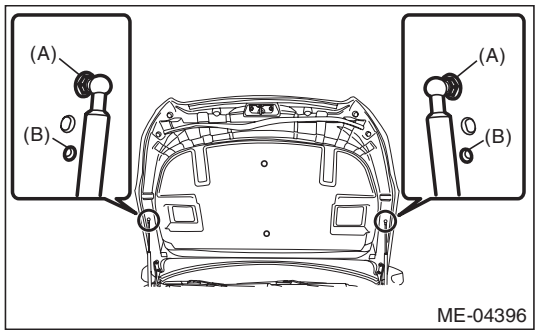

2) Remove the collector cover.

NOTE:
Follow the steps below when removing the collector cover.
(1) Pull up the two points at the rear (A).
(2) Pull up the two points at the front (B) while moving them forward.

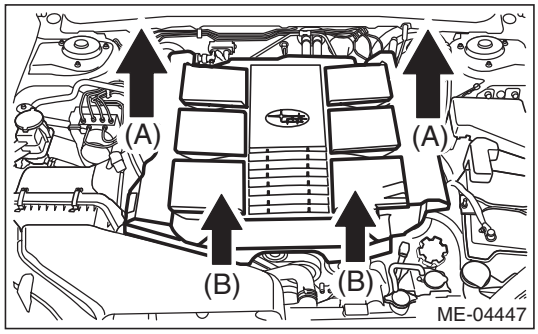

3) Loosen the clamp (A) which connects the air intake boot assembly.

4) Loosen the bolt (B) which secures the air intake boot assembly to the collector cover bracket.

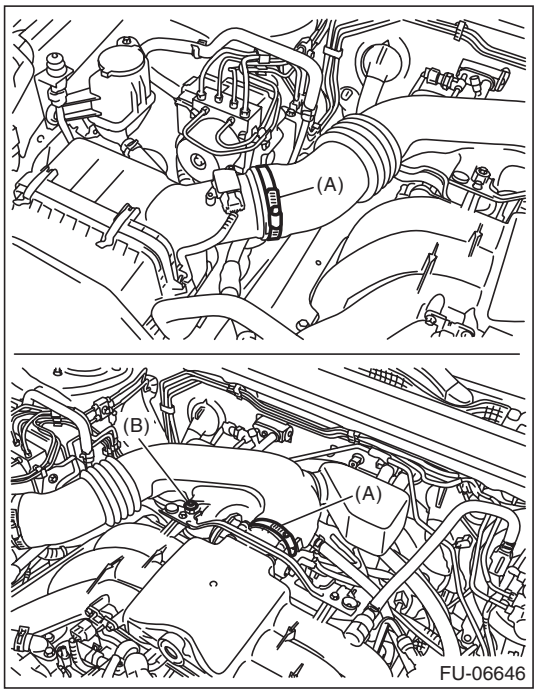

5) Remove the air intake boot assembly, and move it to the left side wheel apron.

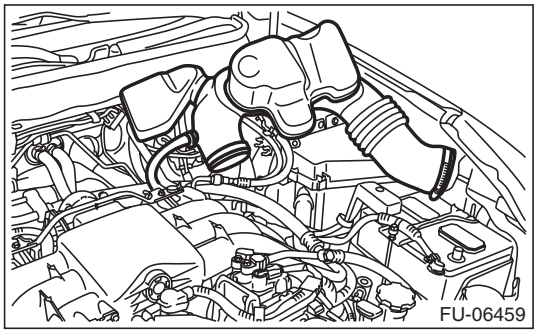

6) Remove the air intake duct and air cleaner case.
<Ref. to IN(H6DO)-8, REMOVAL, Air Intake Duct.>
<Ref. to IN(H6DO)-5, REMOVAL, Air Cleaner Case.>
7) Remove the grille bracket.

NOTE:
Remove ten clips when removing the grille bracket.

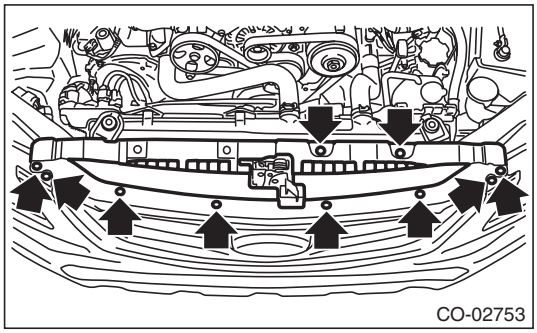

8) Lift up the vehicle.

GETtheMANUALS.org

9) Remove the under cover. <Ref. to EI-35, REMOVAL, Front Under Cover.>
10) Drain engine coolant completely. <Ref. to CO(H6DO)-12, DRAINING OF ENGINE COOLANT, REPLACEMENT, Engine Coolant.>
11) Lower the vehicle.
12) Remove the radiator main fan & fan motor and radiator sub fan & fan motor. <Ref. to CO(H6DO)-21, REMOVAL, Radiator Main Fan and Fan Motor.> <Ref. to CO(H6DO)-24, REMOVAL, Radiator Sub Fan and Fan Motor.>
13) Disconnect the engine harness.

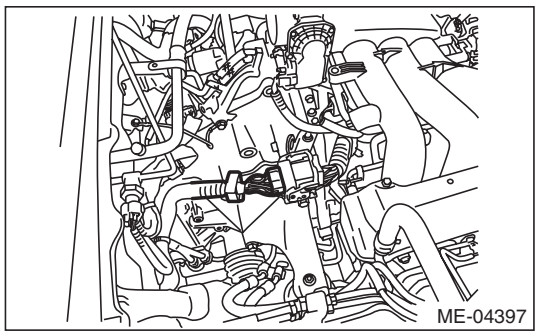
ME-04397

14) Disconnect the connector from the throttle body.

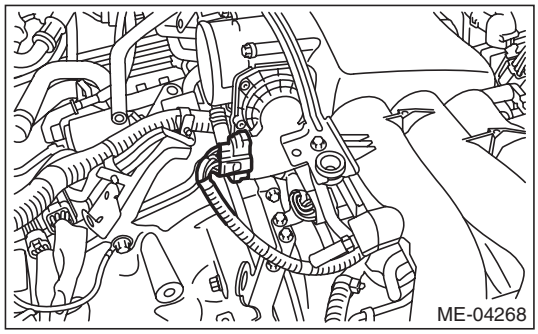
ME-04268

15) Remove the engine harness connector from the engine hanger bracket.

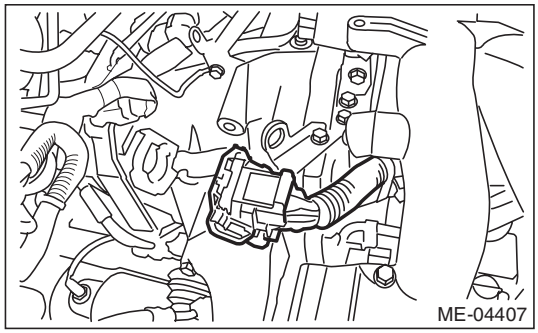
ME-04407

16) Remove the engine hanger bracket.

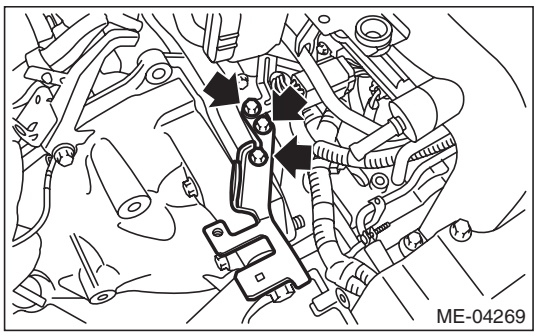
ME-04269

17) Remove the throttle body from the intake manifold.

NOTE:
Do not disconnect the inlet and outlet hoses of engine coolant.
18) Attach the ST.
ST 18360AA020 HANGER

Tightening torque:
19 N·m (1.9 kgf-m, 14.0 ft-lb)

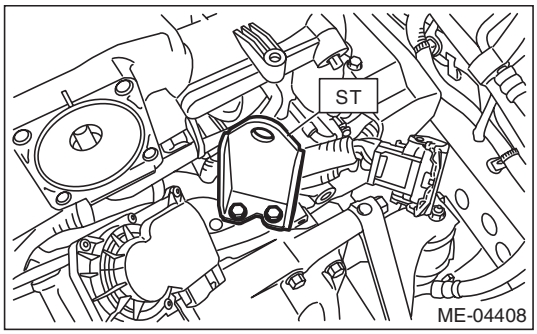

ME-04408

19) Support the engine with a lifting device and wire ropes.

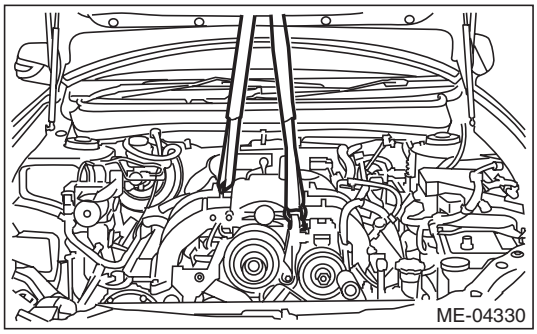
ME-04330

GETtheMANUALS.org

20) Remove the front mount.

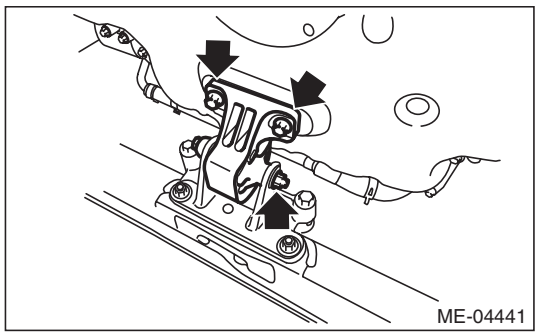

21) Remove the front mounting bracket from the cradle.

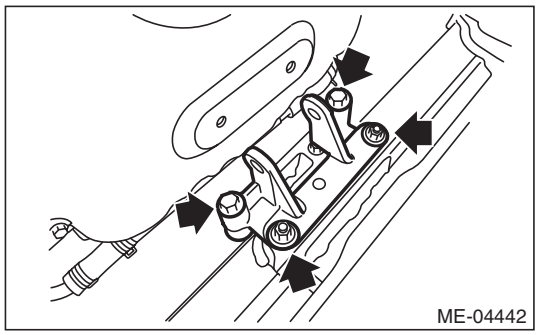

22) Remove the bracket from the cradle.

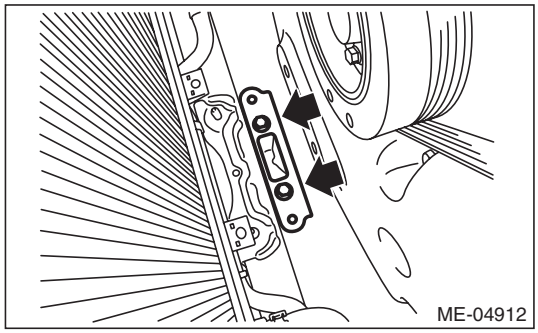

B: INSTALLATION

1) Install the bracket to the cradle.

Tightening torque:
65 N·m (6.6 kgf-m, 47.9 ft-lb)

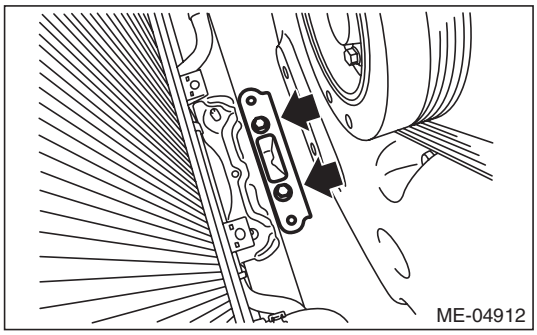

2) Install front mounting bracket to the cradle.

Tightening torque:
60 N·m (6.1 kgf-m, 44.3 ft-lb)

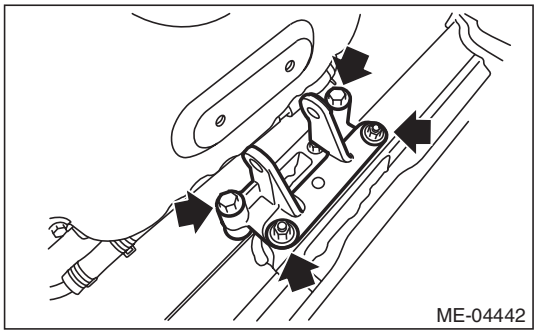

3) Install the front mount.

Tightening torque:
T1: 25 N·m (2.5 kgf-m, 18.4 ft-lb)
T2: 45 N·m (4.6 kgf-m, 33.2 ft-lb)

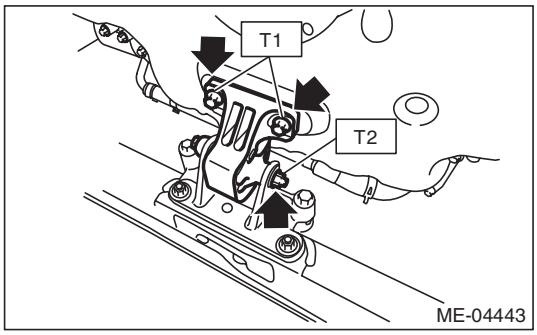

GETtheMANUALS.org

4) Remove the lifting device and wire ropes.

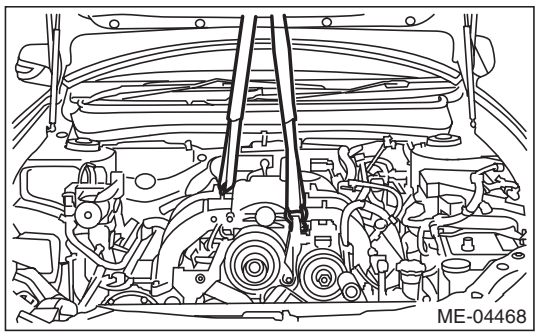

5) Install the radiator main fan & fan motor and radiator sub fan & fan motor. <Ref. to CO(H6DO)-22, INSTALLATION, Radiator Main Fan and Fan Motor.> <Ref. to CO(H6DO)-24, INSTALLATION, Radiator Sub Fan and Fan Motor.>
6) Lift up the vehicle.
7) Install the under cover. <Ref. to EI-35, INSTALLATION, Front Under Cover.>
8) Lower the vehicle.
9) Remove the ST.

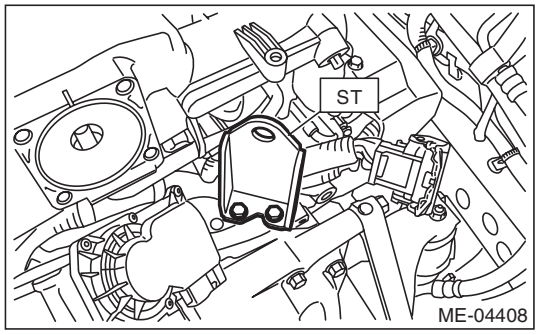

10) Install the throttle body to intake manifold.

NOTE:
Use a new gasket.

Tightening torque:
8 N·m (0.8 kgf-m, 5.9 ft-lb)

11) Install the engine hanger bracket.

Tightening torque:
19 N·m (1.9 kgf-m, 14.0 ft-lb)

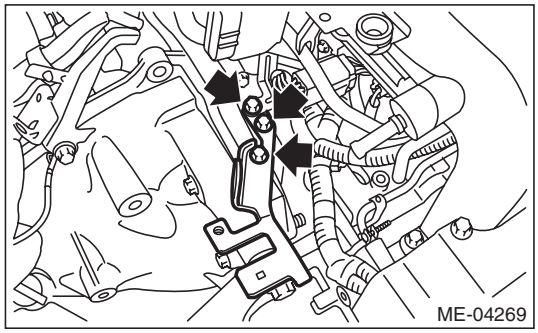

12) Install the engine harness connector to the engine hanger bracket.

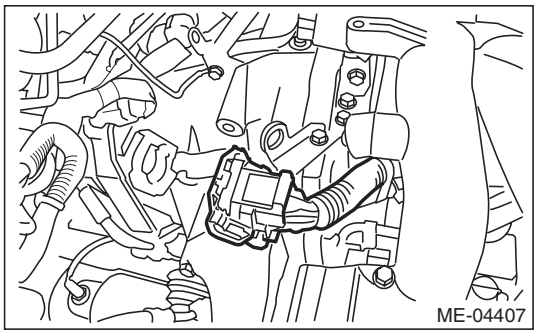

13) Connect the connector to the throttle body.

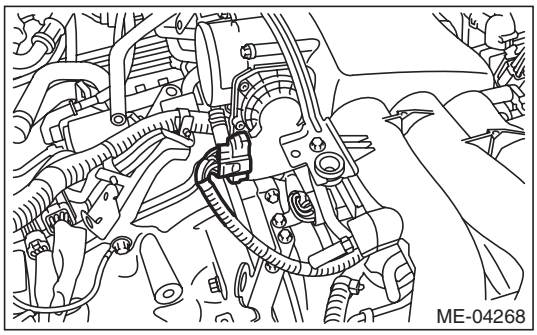

14) Connect the engine harness.

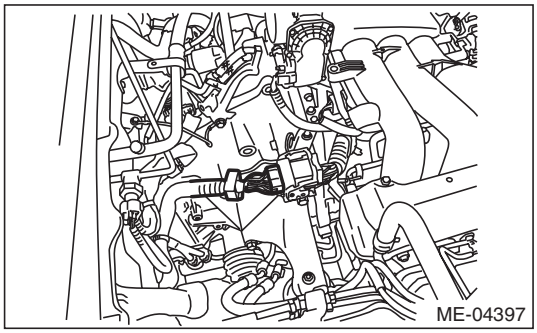

15) Attach the grille bracket.

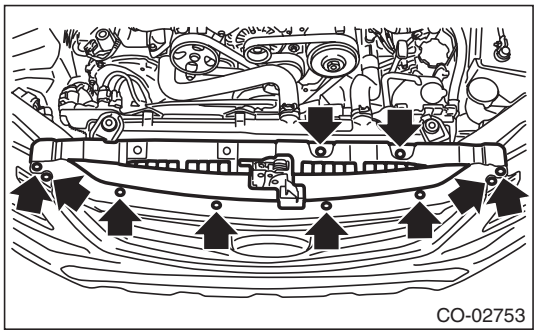

16) Install the air intake duct and air cleaner case. <Ref. to IN(H6DO)-8, INSTALLATION, Air Intake Duct.> <Ref. to IN(H6DO)-5, INSTALLATION, Air Cleaner Case.>

GETtheMANUALS.org

17) Install the air intake boot assembly.

Tightening torque:
Clamp (A)
3 N·m (0.3 kgf-m, 2.2 ft-lb)
Bolt (B)
6.5 N·m (0.7 kgf-m, 4.8 ft-lb)

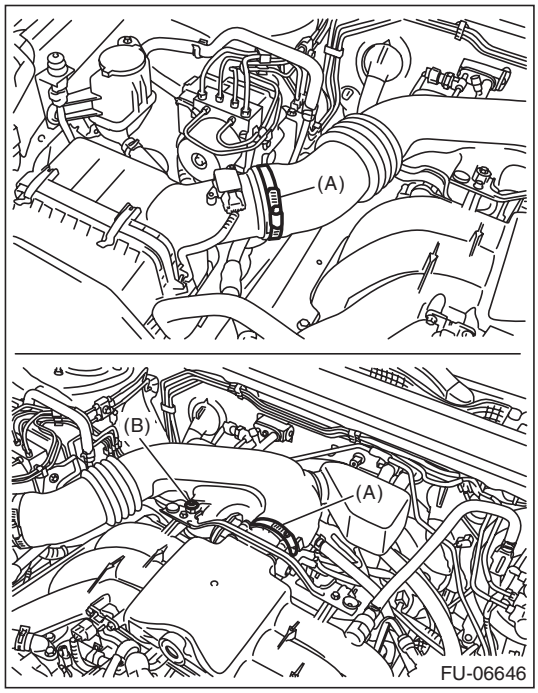

18) Connect the ground cable to battery.
19) Fill engine coolant. <Ref. to CO(H6DO)-12, FILLING OF ENGINE COOLANT, REPLACEMENT, Engine Coolant.>
20) Install the collector cover.
21) Change the front hood damper bolt mounting position from (B) to (A), and completely close the front hood.

Tightening torque:
20 N·m (2.0 kgf-m, 14.8 ft-lb)

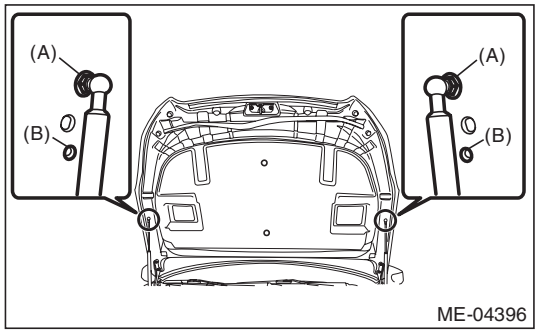

C: INSPECTION

Check that the front mount and front mount bracket have no deformation, cracks and other damages.

GETtheMANUALS.org

11. Preparation for Overhaul

A: REMOVAL

1) Remove the engine from vehicle. <Ref. to ME(H6DO)-36, REMOVAL, Engine Assembly.>
2) Set the engine on ST.
ST 18232AA000 ENGINE STAND

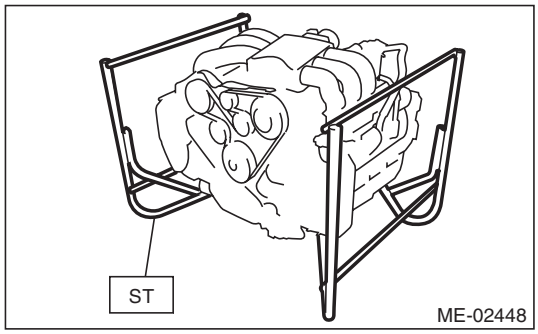

3) Before servicing overhaul, remove the sensor, pipe and hose that installed to engine.
   (1) Remove the intake manifold. <Ref. to FU(H6DO)-21, REMOVAL, Intake Manifold.>
   (2) Remove the generator. <Ref. to SC(H4SO)-18, REMOVAL, Generator.>
   (3) Remove the A/C compressor. <Ref. to AC-55, REMOVAL, Compressor.>
   (4) Disconnect the water pipe and hose.
   (5) Disconnect the engine harness.
   (6) Remove the spark plug. <Ref. to IG(H6DO)-4, REMOVAL, Spark Plug.>
   (7) Remove the camshaft position sensor. <Ref. to FU(H6DO)-34, REMOVAL, Camshaft Position Sensor.>
   (8) Remove the crankshaft position sensor. <Ref. to FU(H6DO)-31, REMOVAL, Crankshaft Position Sensor.>
   (9) Remove the knock sensor. <Ref. to FU(H6DO)-37, REMOVAL, Knock Sensor.>
   (10) Remove the engine coolant temperature sensor. <Ref. to FU(H6DO)-29, REMOVAL, Engine Coolant Temperature Sensor.>
   (11) Remove the oil temperature sensor. <Ref. to FU(H6DO)-49, REMOVAL, Oil Temperature Sensor.>
   (12) Remove the oil flow control solenoid valve. <Ref. to FU(H6DO)-47, REMOVAL, Oil Flow Control Solenoid Valve.>
   (13) Remove the oil pressure switch. <Ref. to LU(H6DO)-14, REMOVAL, Oil Pressure Switch.>
   (14) Remove the oil filter. <Ref. to LU(H6DO)-15, REMOVAL, Engine Oil Filter.>
   (15) Remove the oil cooler. <Ref. to LU(H6DO)-16, REMOVAL, Oil Cooler.>

GETtheMANUALS.org

12. V-belt

A: REMOVAL

1) Remove the collector cover.

NOTE:
Follow the steps below when removing the collector cover.
(1) Pull up the two points at the rear (A).
(2) Pull up the two points at the front (B) while moving them forward.

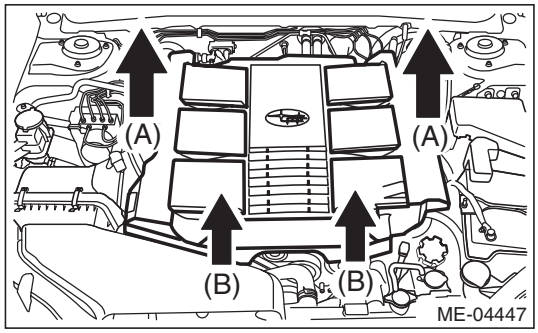

2) Remove the air intake duct. <Ref. to IN(H6DO)-8, REMOVAL, Air Intake Duct.>
3) Install the tool to the pulley bolt of the belt tension adjuster assembly.
4) Rotate the tool clockwise and loosen the V-belt to remove.

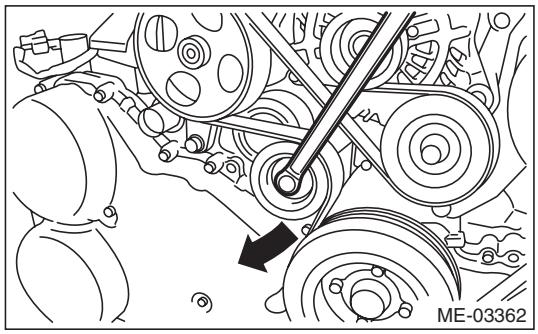

B: INSTALLATION

Install in the reverse order of removal.

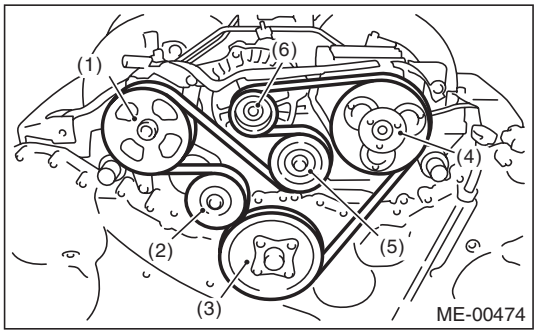

(1) Power steering oil pump pulley
(2) Belt tension adjuster ASSY
(3) Crank pulley
(4) A/C compressor pulley
(5) Belt idler
(6) Generator

C: INSPECTION

1) Replace the V-belt, if cracks, fraying or wear is found.
2) Make sure that the V-belt automatic belt tension indicator (A) is within the range (D).

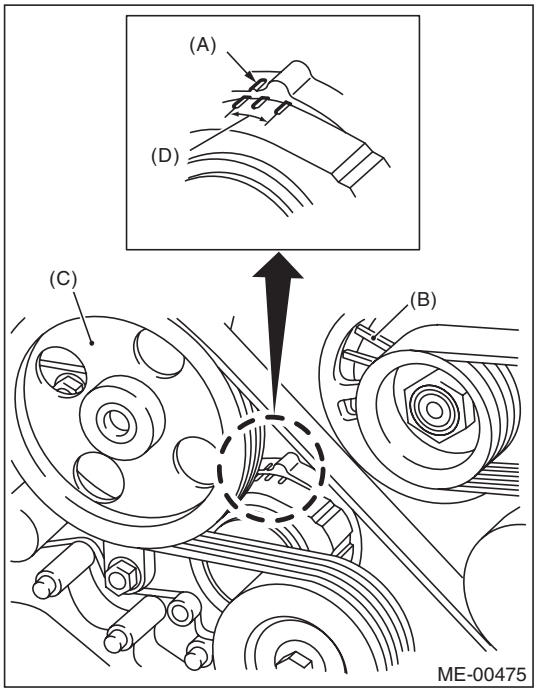

(A) Indicator
(B) Generator
(C) Power steering oil pump pulley
(D) Service limit

GETtheMANUALS.org

13. Crank Pulley

A: REMOVAL

1) Remove the V-belts. <Ref. to ME(H6DO)-51, REMOVAL, V-belt.>
2) Remove the crank pulley cover.

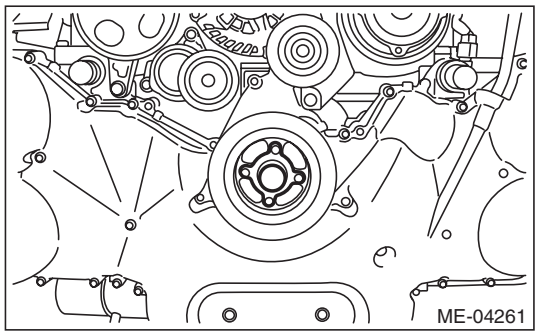

3) Use the ST to lock the crank pulley, and remove the crank pulley bolt.

ST1	18355AA000	PULLEY WRENCH
ST2	18334AA000	PULLEY WRENCH PIN SET

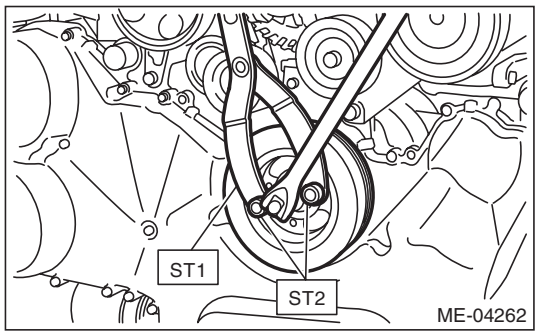

4) Remove the crank pulley.

B: INSTALLATION

1) Clean the crankshaft thread using compressed air.
2) Install the crank pulley.
3) Apply engine oil to the crank pulley bolt seat and thread.
4) Use the ST to lock the crank pulley, and tighten the crank pulley bolt.

ST1	18355AA000	PULLEY WRENCH
ST2	18334AA000	PULLEY WRENCH PIN SET

Tightening torque:
195 N·m (19.9 kgf-m, 143.8 ft-lb)

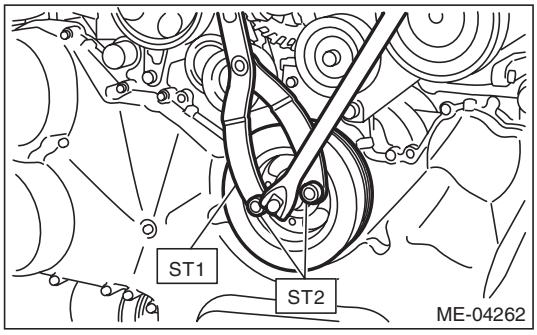

5) Install the O-ring, and install the crank pulley cover.

NOTE:
Use new O-rings.

Tightening torque:
6.4 N·m (0.7 kgf-m, 4.7 ft-lb)

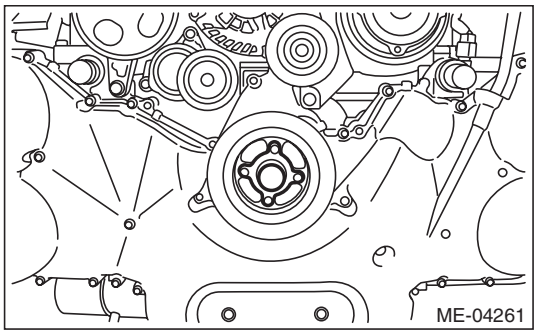

6) Install the V-belts. <Ref. to ME(H6DO)-51, INSTALLATION, V-belt.>

C: INSPECTION

1) Check for oil leaks in the crank pulley cover.
2) Check the crank pulley for looseness.

GETtheMANUALS.org

14. Chain Cover

A: REMOVAL

1) Drain the engine oil. <Ref. to LU(H6DO)-9, REPLACEMENT, Engine Oil.>
2) Lift up the vehicle.
3) Remove the under cover. <Ref. to EI-35, REMOVAL, Front Under Cover.>
4) Drain engine coolant. <Ref. to CO(H6DO)-12, DRAINING OF ENGINE COOLANT, REPLACEMENT, Engine Coolant.>
5) Remove the front exhaust pipe. <Ref. to EX(H6DO)-5, REMOVAL, Front Exhaust Pipe.>
6) Lower the vehicle.
7) Change the bolt mounting position from (A) to (B), and completely open the front hood.

Tightening torque:
20 N·m (2.0 kgf-m, 14.8 ft-lb)

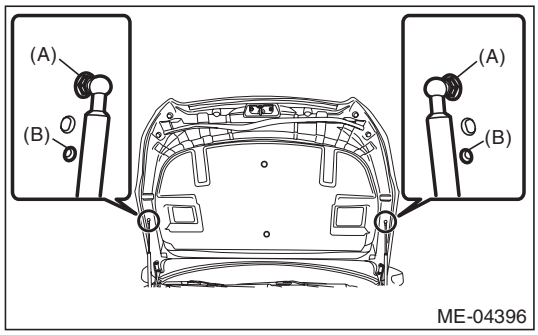

8) Loosen the clamp (A) which connects the air intake boot assembly.
9) Loosen the bolt (B) which secures the air intake boot assembly to the collector cover bracket.

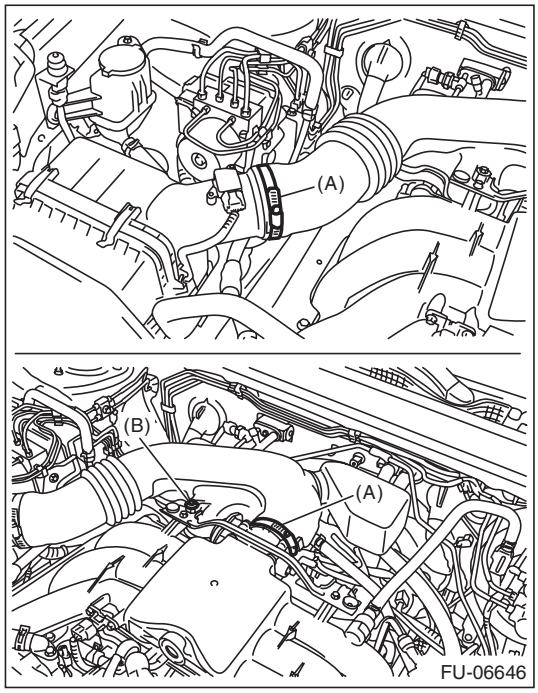

10) Remove the air intake boot assembly, and move it to the left side wheel apron.

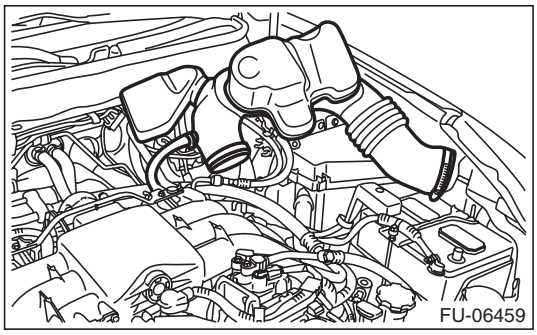

11) Remove the air intake duct. <Ref. to IN(H6DO)-8, REMOVAL, Air Intake Duct.>
12) Disconnect the engine harness connector.

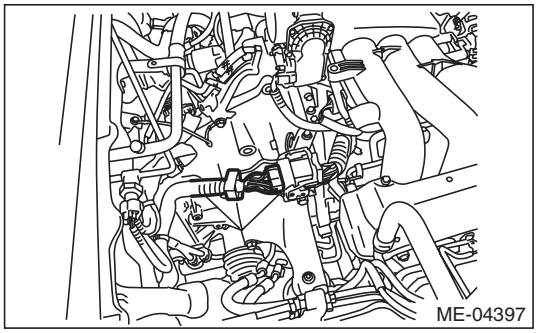

13) Disconnect the connector from the throttle body.

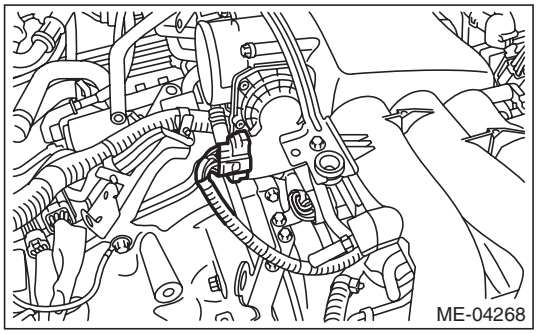

14) Remove the engine harness connector from the engine hanger bracket.

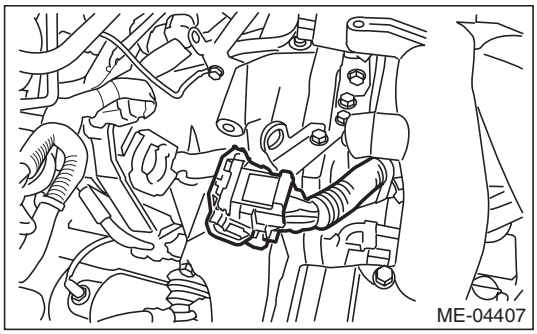

GETtheMANUALS.org

15) Remove the engine hanger bracket.

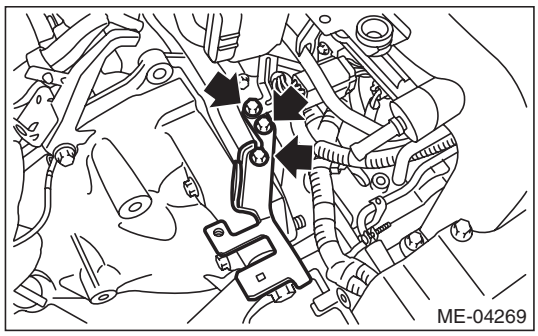

16) Remove the throttle body from the intake manifold.

NOTE:
Do not disconnect the inlet and outlet hoses of engine coolant.

17) Attach the ST.
ST 18360AA020 HANGER

Tightening torque:
19 N·m (1.9 kgf-m, 14.0 ft-lb)

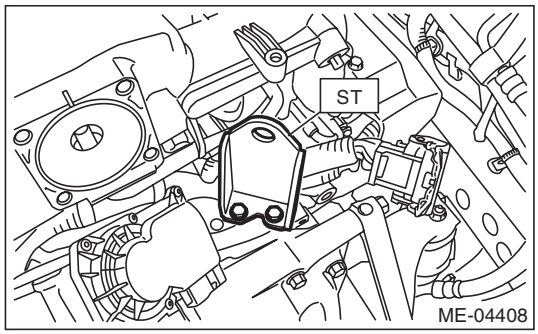

18) Remove the grille bracket.

NOTE:
Remove ten clips when removing the grille bracket.

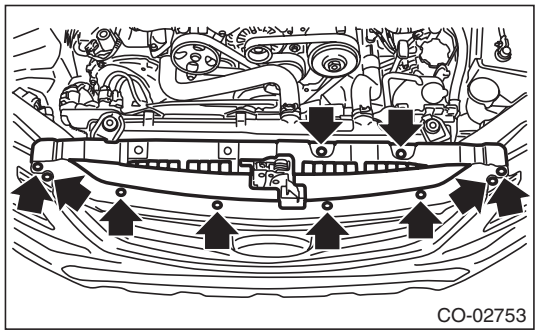

19) Remove the V-belts. <Ref. to ME(H6DO)-51, REMOVAL, V-belt.>
20) Remove the reservoir tank. <Ref. to CO(H6DO)-25, REMOVAL, Reservoir Tank.>
21) Remove the radiator main fan & fan motor and radiator sub fan & fan motor. <Ref. to CO(H6DO)-21, REMOVAL, Radiator Main Fan and Fan Motor.>
22) Remove the radiator. <Ref. to CO(H6DO)-17, REMOVAL, Radiator.>
23) Remove the crank pulley. <Ref. to ME(H6DO)-52, REMOVAL, Crank Pulley.>
24) Support the engine with a lifting device and wire ropes.
25) Remove the front mount from the chain cover.

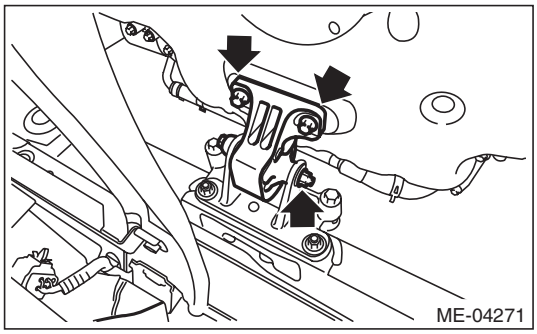

26) Remove the front mounting bracket from the cradle.

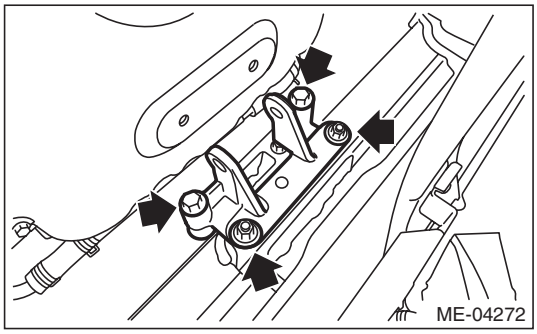

27) Remove the oil cooler pipe from the chain cover.

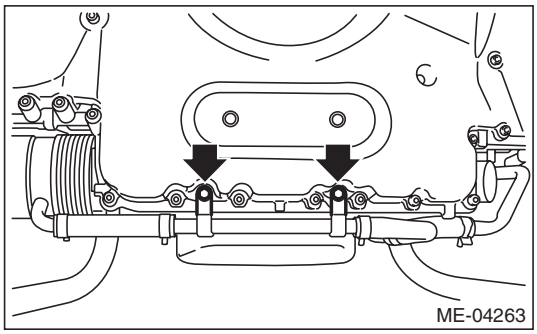

GETtheMANUALS.org

28) Remove the chain cover.

NOTE:
Chain cover installation bolt has three different sizes. To prevent the confusion in installation, keep these bolts on container individually.

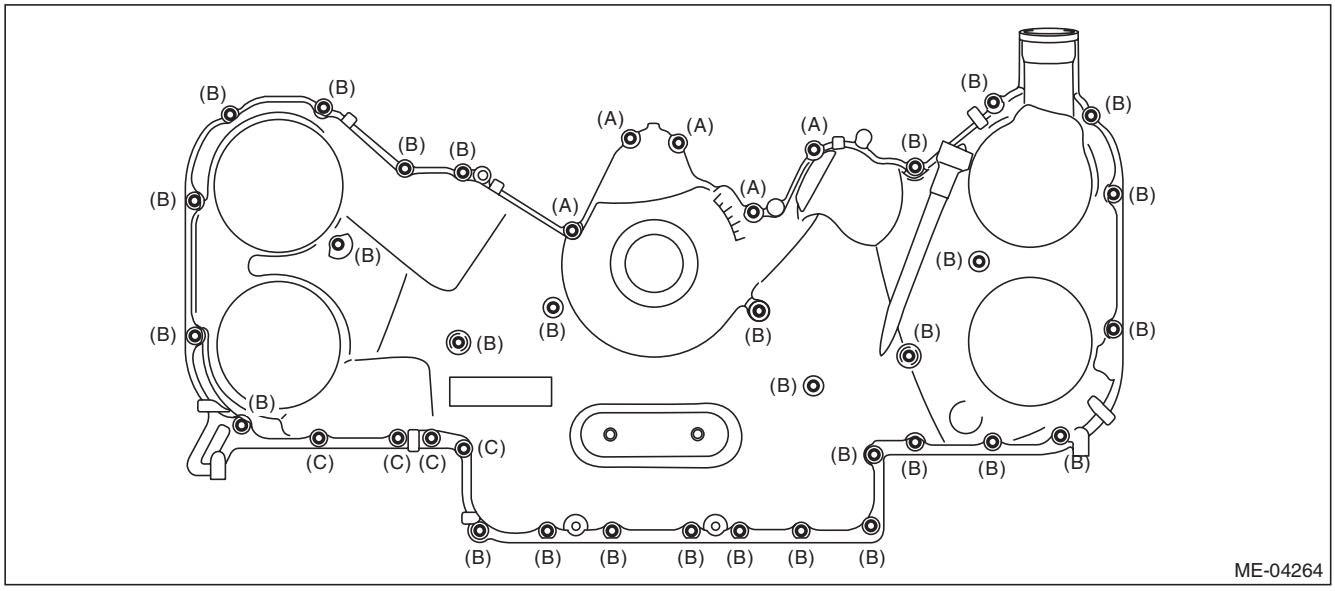

(A) M6 × 21 (B) M6 × 30 (C) M6 × 53

GETtheMANUALS.org

B: INSTALLATION

1) Apply liquid gasket to the mating surfaces of the cylinder block, cylinder head and oil pan upper as shown in the figure.

Liquid gasket:
THREE BOND 1217G (Part No. K0877Y0100) or equivalent

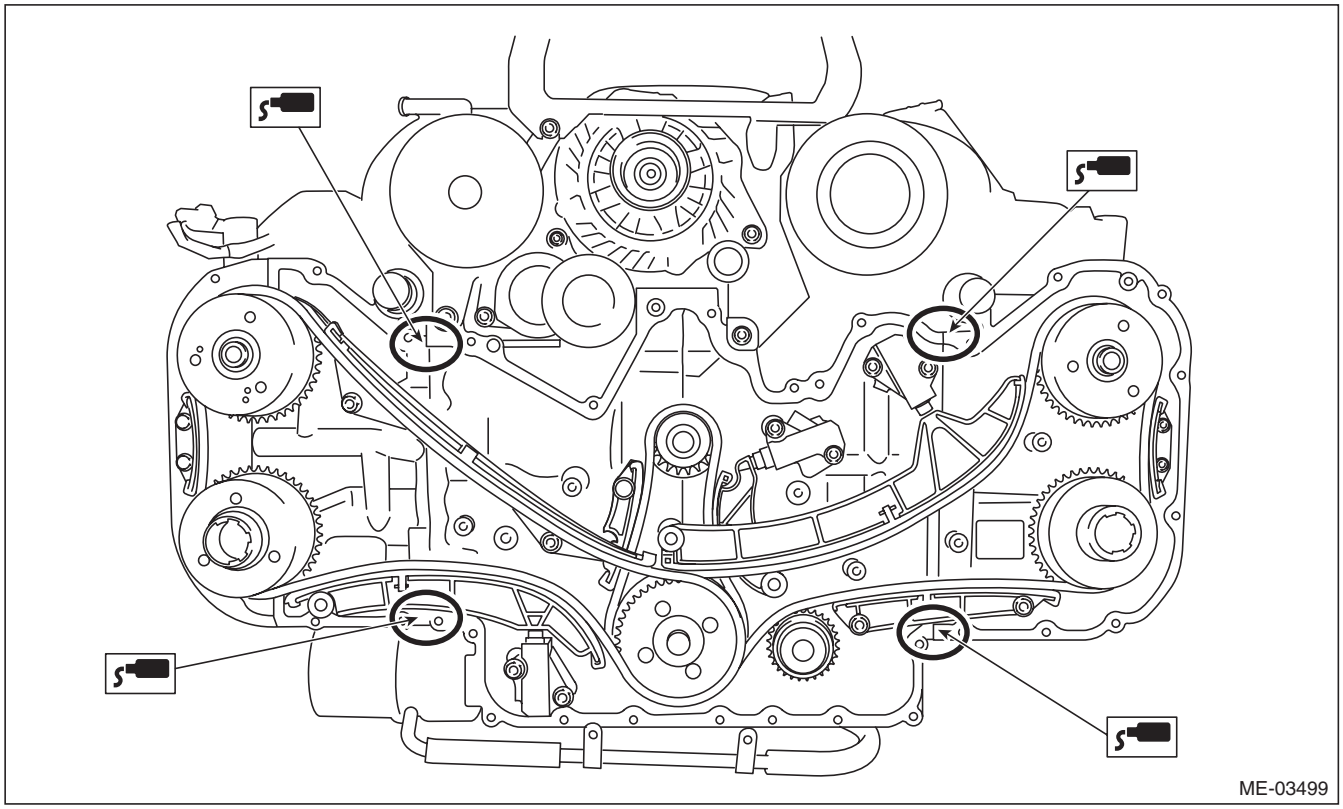

GETtheMANUALS.org

2) Apply liquid gasket to the mating surface of the chain cover.

NOTE:
Install within 5 min. after applying liquid gasket.

Liquid gasket:
THREE BOND 1217G (Part No. K0877Y0100) or equivalent

Liquid gasket applying diameter:
3.5±0.5 mm (0.138±0.020 in)

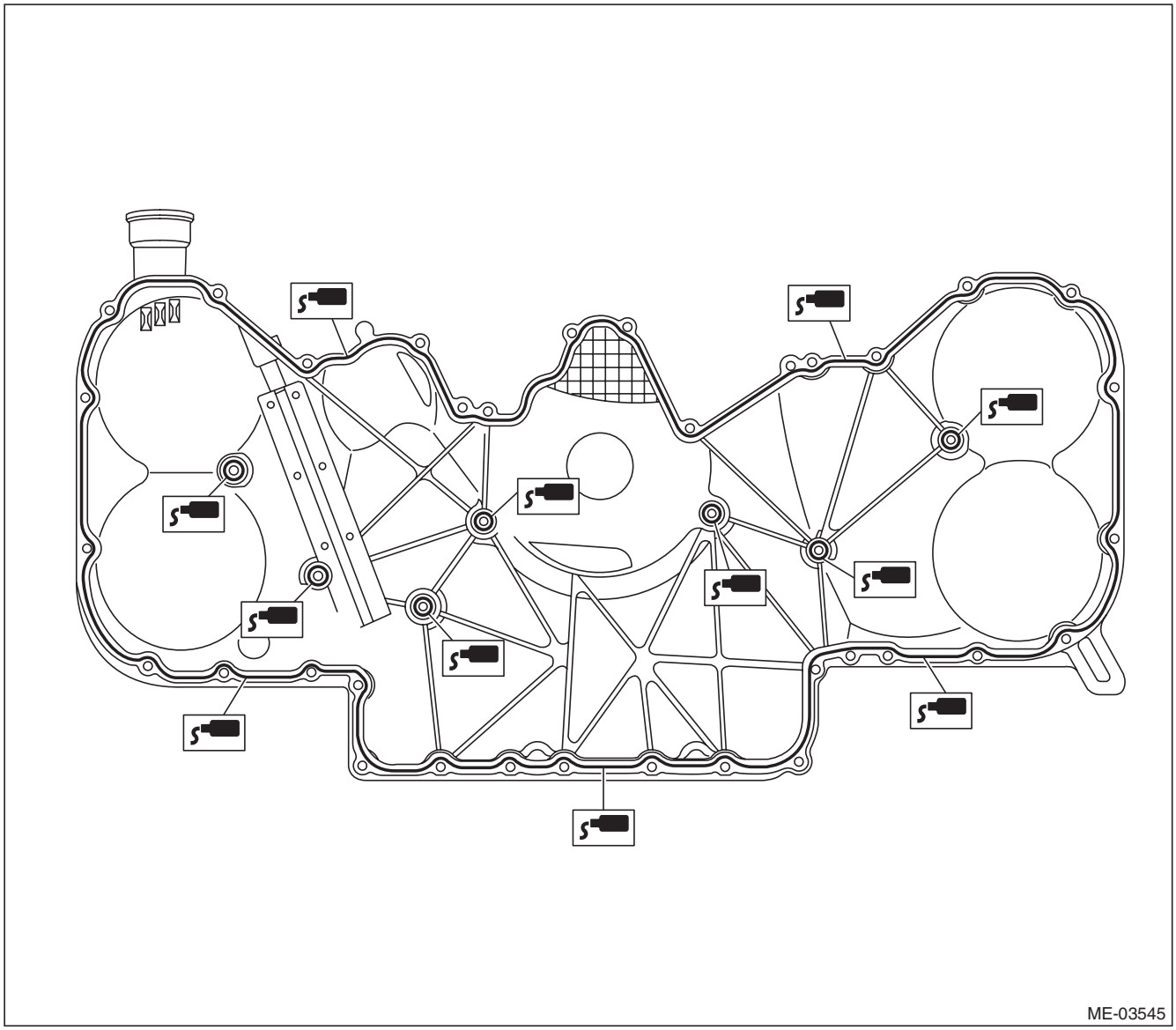

GETtheMANUALS.org

3) Attach the chain cover and temporarily tighten the chain cover installation bolts.

CAUTION:
Do not install the chain cover installation bolts in wrong place.

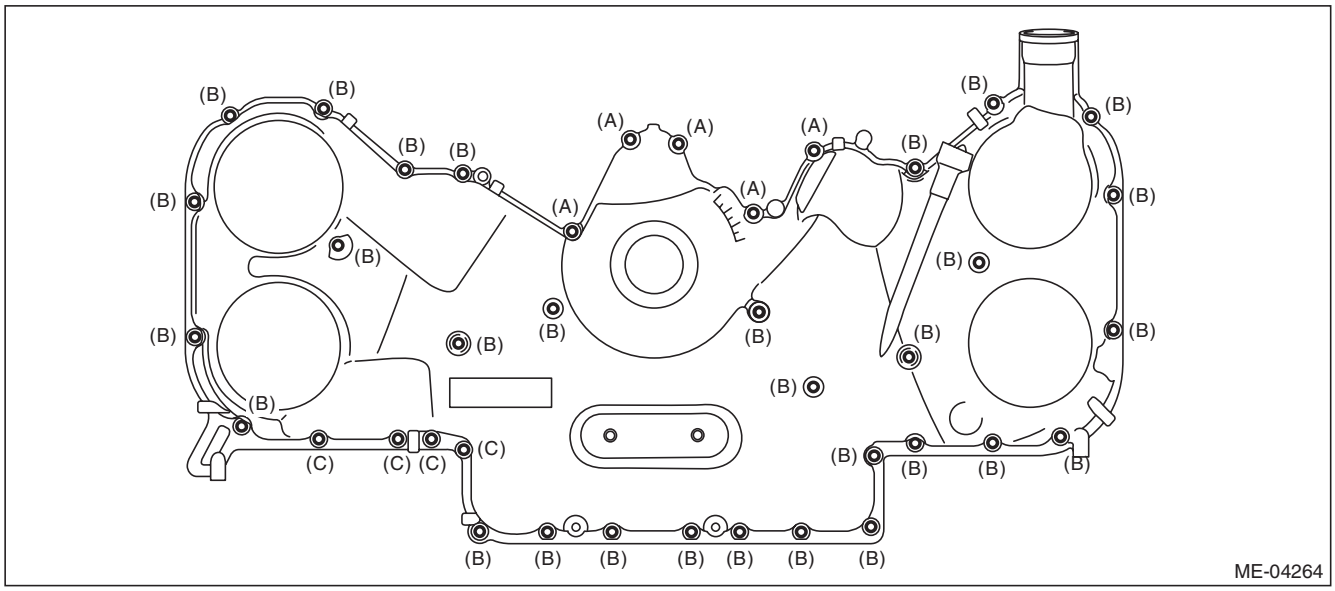

(A) M6 × 21 (B) M6 × 30 (C) M6 × 53

4) Tighten the chain cover installing bolts in the numerical order as shown in the figure.

Tightening torque:
10 N·m (1.0 kgf-m, 7.4 ft-lb)

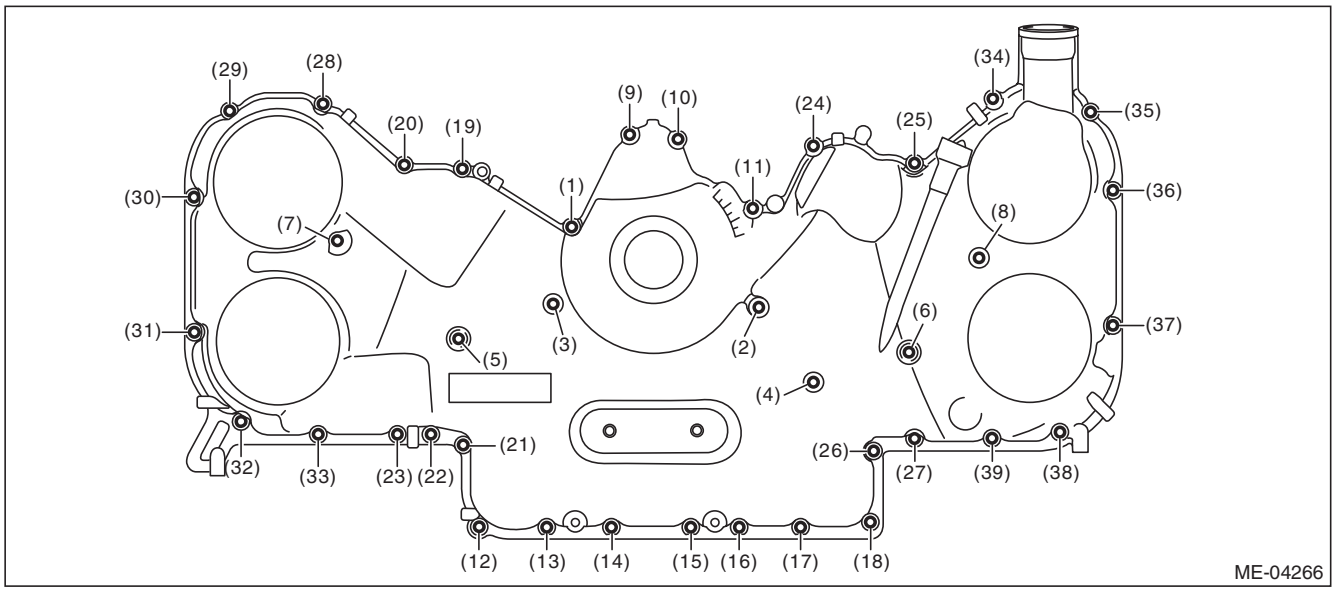

GETtheMANUALS.org

5) Install the oil cooler pipe to the chain cover.

Tightening torque:
6.4 N·m (0.7 kgf-m, 4.7 ft-lb)

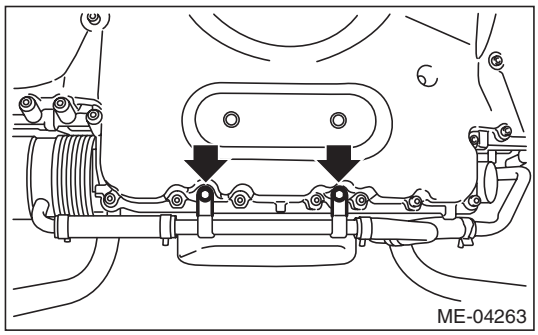

6) Install front mounting bracket to the cradle.

Tightening torque:
60 N·m (6.1 kgf-m, 44.3 ft-lb)

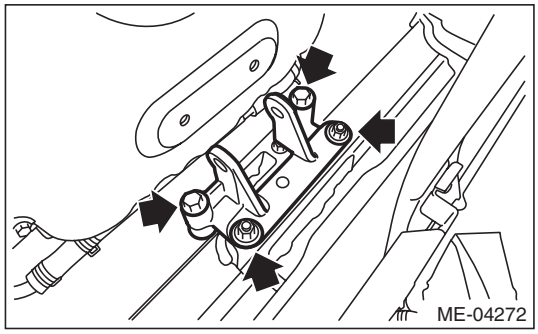

7) Install the front mount.

Tightening torque:
T1: 25 N·m (2.5 kgf-m, 18.4 ft-lb)
T2: 45 N·m (4.6 kgf-m, 33.2 ft-lb)

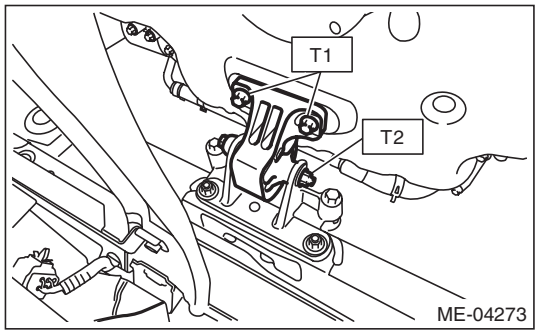

8) Remove the lifting device and wire ropes.
9) Install the crank pulley. <Ref. to ME(H6DO)-52, INSTALLATION, Crank Pulley.>
10) Install the radiator. <Ref. to CO(H6DO)-18, INSTALLATION, Radiator.>
11) Install the radiator main & fan motor and radiator sub fan & fan motor. <Ref. to CO(H6DO)-22, INSTALLATION, Radiator Main Fan and Fan Motor.>
12) Install the reservoir tank. <Ref. to CO(H6DO)-25, REMOVAL, Reservoir Tank.>
13) Install the V-belts. <Ref. to ME(H6DO)-51, INSTALLATION, V-belt.>
14) Attach the grille bracket.

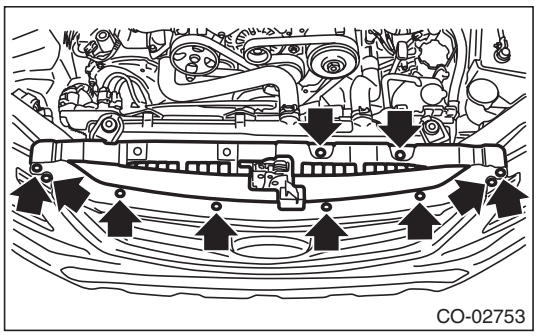

15) Install the throttle body to intake manifold.

NOTE:
Use a new gasket.

Tightening torque:
8 N·m (0.8 kgf-m, 5.9 ft-lb)

16) Remove the ST (HANGER) and install the engine hanger bracket.

Tightening torque:
19 N·m (1.9 kgf-m, 14.0 ft-lb)

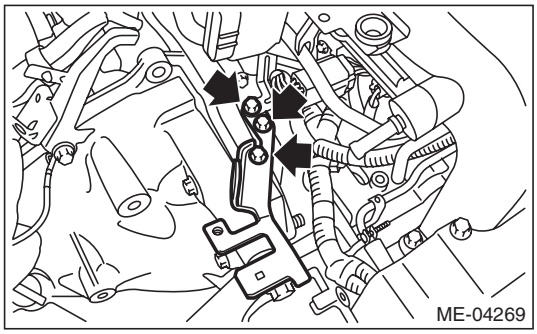

17) Install the engine harness connector to the engine hanger bracket.

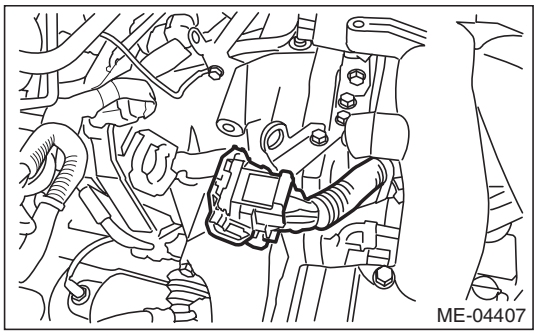

GETtheMANUALS.org

18) Connect the connector to the throttle body.

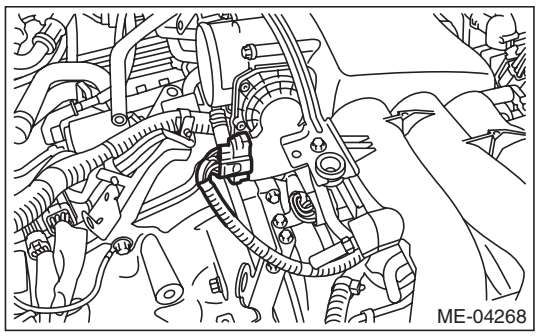

19) Connect the engine harness connector.

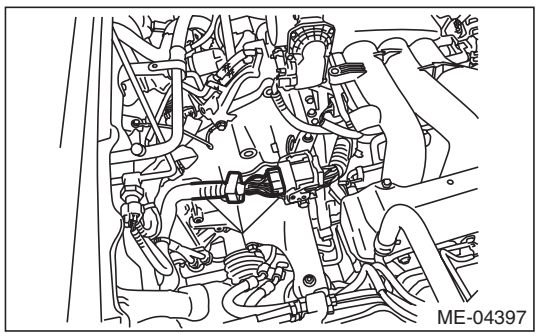

20) Install the V-belts. <Ref. to ME(H6DO)-51, INSTALLATION, V-belt.>
21) Install the air intake boot assembly.

Tightening torque:
Clamp (A)
3 N·m (0.3 kgf-m, 2.2 ft-lb)
Bolt (B)
6.5 N·m (0.7 kgf-m, 4.8 ft-lb)

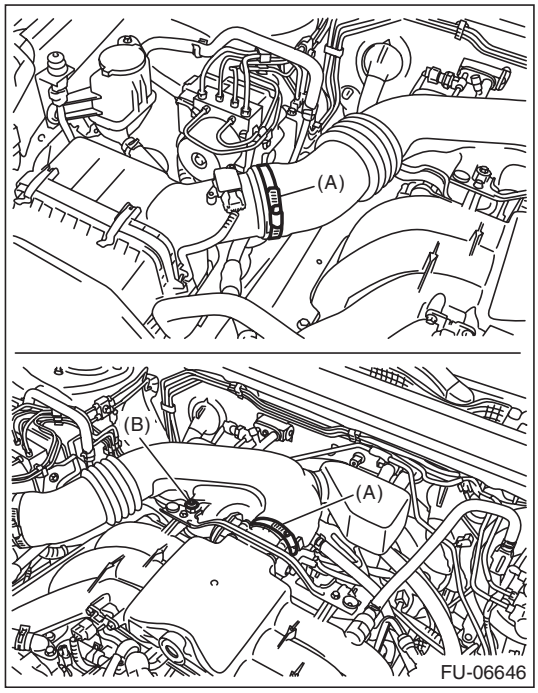

22) Install the air intake duct. <Ref. to IN(H6DO)-8, INSTALLATION, Air Intake Duct.>
23) Install the front exhaust pipe. <Ref. to EX(H6DO)-6, INSTALLATION, Front Exhaust Pipe.>
24) Fill engine coolant. <Ref. to CO(H6DO)-12, FILLING OF ENGINE COOLANT, REPLACEMENT, Engine Coolant.>
25) Fill engine oil. <Ref. to LU(H6DO)-9, REPLACEMENT, Engine Oil.>
26) Make sure there is no oil leaks in the chain cover mating surface.
27) Install the under cover. <Ref. to EI-35, INSTALLATION, Front Under Cover.>
28) Install the collector cover.
29) Change the bolt mounting position from (B) to (A), and completely close the front hood.

Tightening torque:
20 N·m (2.0 kgf-m, 14.8 ft-lb)

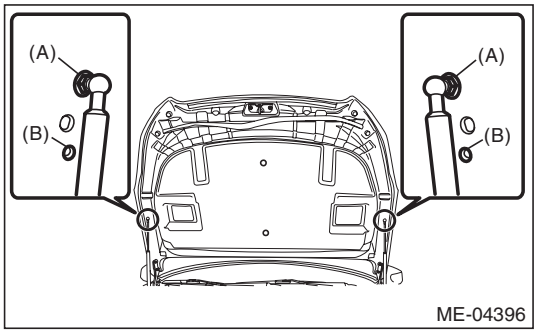

GETtheMANUALS.org

C: INSPECTION

1) Check the chain cover surface for scratches or dents.
2) Check for oil leakage on the chain cover mating surface and installation part of crank pulley.
If there is an oil leak from the oil seal, perform replacement with a new oil seal.
ST 499585700 OIL SEAL GUIDE

Oil seal press-fit position:
Chain cover end face — Position –1 mm (–0.039 in) from the chain cover end face.

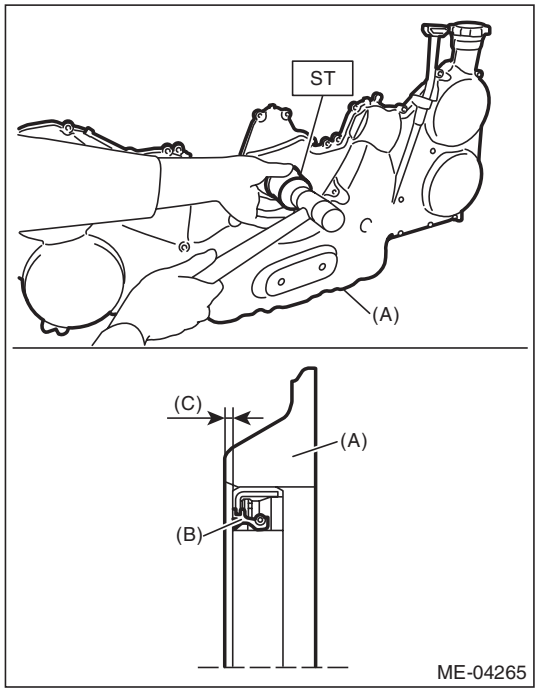

(A) Chain cover
(B) Oil seal
(C) Oil seal press-fit position
(chain cover edge –1mm (–0.039 in) position)

GETtheMANUALS.org

15.Timing Chain Assembly

A: LOCATION

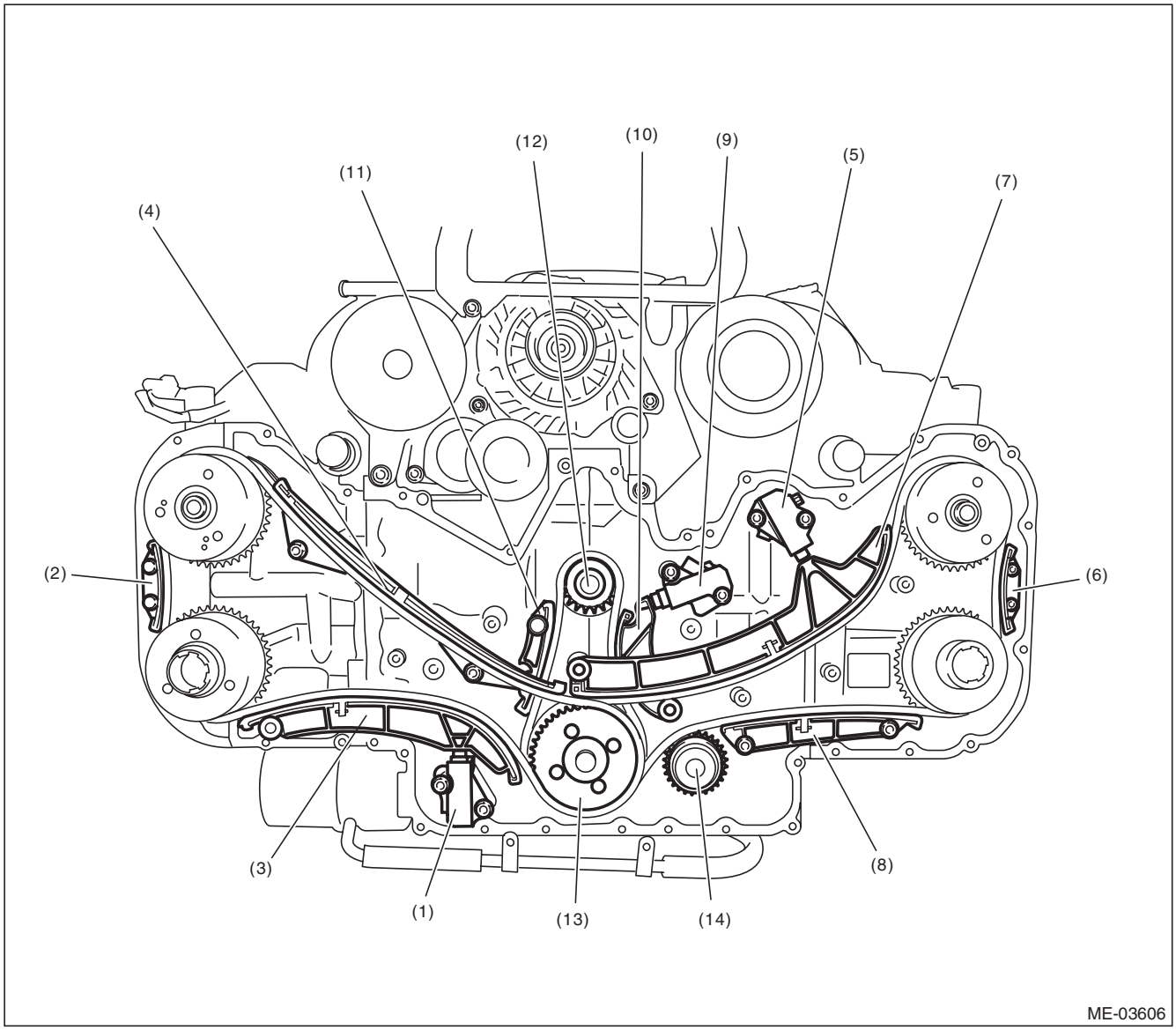

(1)	Chain tensioner (RH)	(6)	Chain guide (between cams, LH)	(11)	Chain guide (main)
(2)	Chain guide (between cams, RH)	(7)	Chain tensioner lever (LH)	(12)	Crank sprocket
(3)	Chain tensioner lever (RH)	(8)	Chain guide (LH)	(13)	Idler sprocket
(4)	Chain guide (RH)	(9)	Chain tensioner (main)	(14)	Water pump sprocket
(5)	Chain tensioner (LH)	(10)	Chain tensioner lever (main)		

GETtheMANUALS.org

B: REMOVAL

NOTE:
To avoid mixing the timing chain component parts, separate each part after their removal.
1) Drain the engine oil. <Ref. to LU(H6DO)-9, REPLACEMENT, Engine Oil.>
2) Remove the radiator. <Ref. to CO(H6DO)-17, REMOVAL, Radiator.>
3) Remove the V-belts. <Ref. to ME(H6DO)-51, REMOVAL, V-belt.>
4) Remove the crank pulley. <Ref. to ME(H6DO)-52, REMOVAL, Crank Pulley.>
5) Remove the chain cover. <Ref. to ME(H6DO)-53, REMOVAL, Chain Cover.>
6) Remove the chain tensioner (RH).

NOTE:
When removing chain tensioner (RH), hold the plunger by hand so that it does not come flying out.

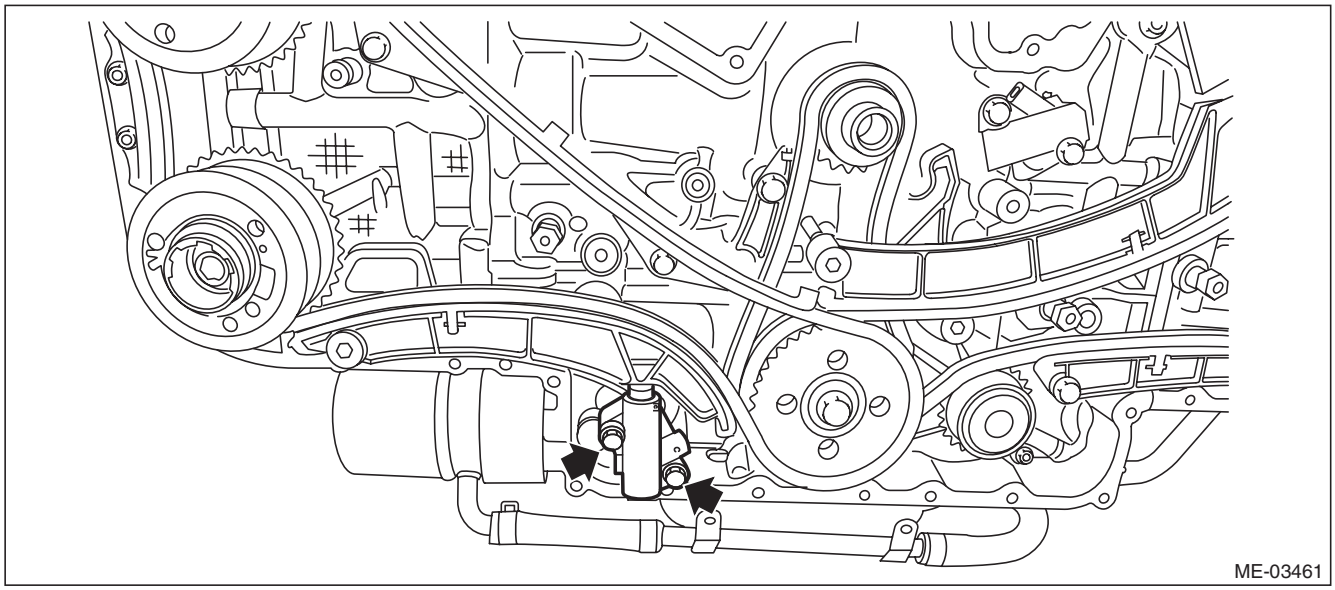

7) Remove the chain guide (RH: between cams).

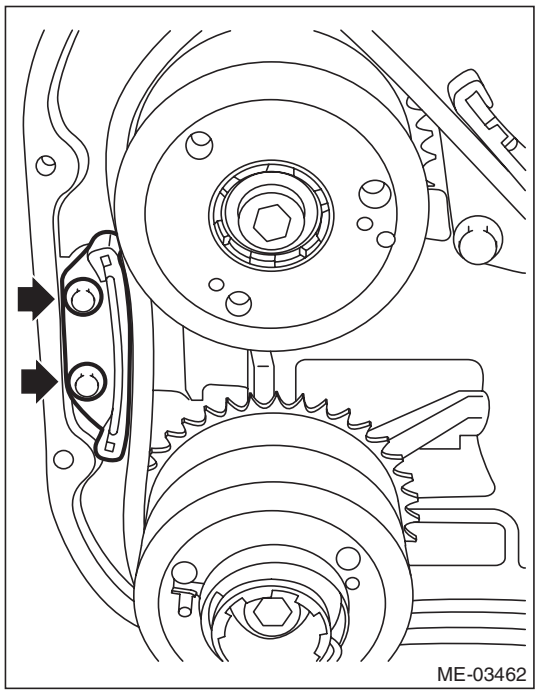

GETtheMANUALS.org

8) Remove the chain tensioner lever (RH).

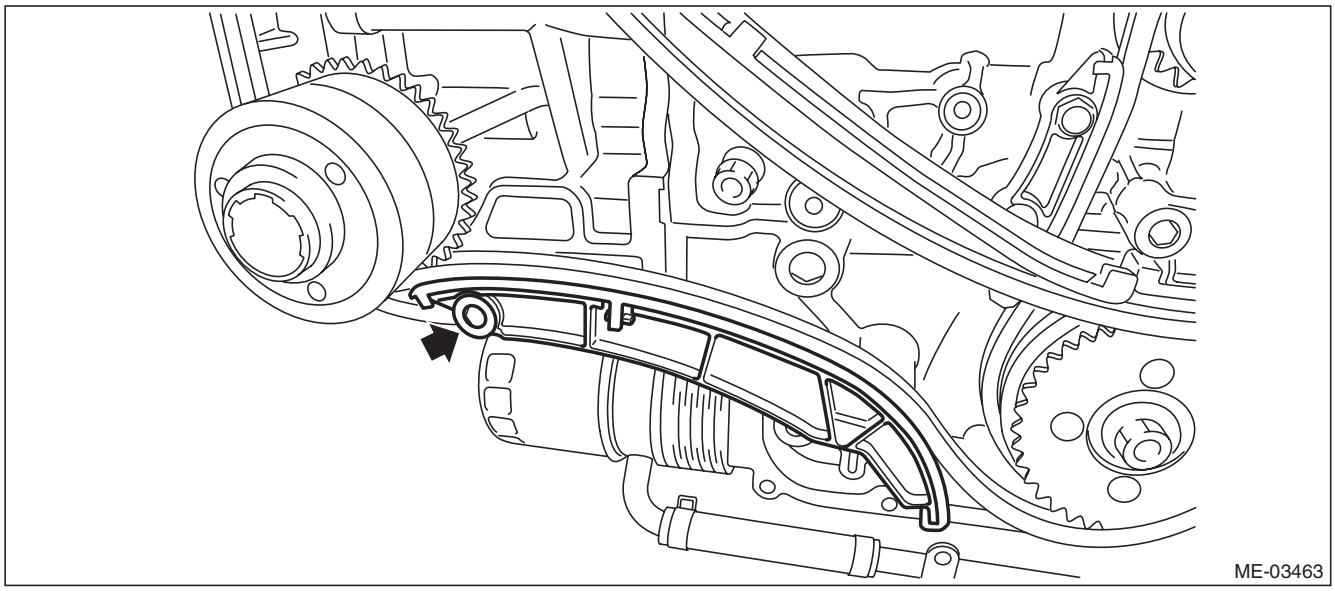

9) Remove the chain guide (RH).

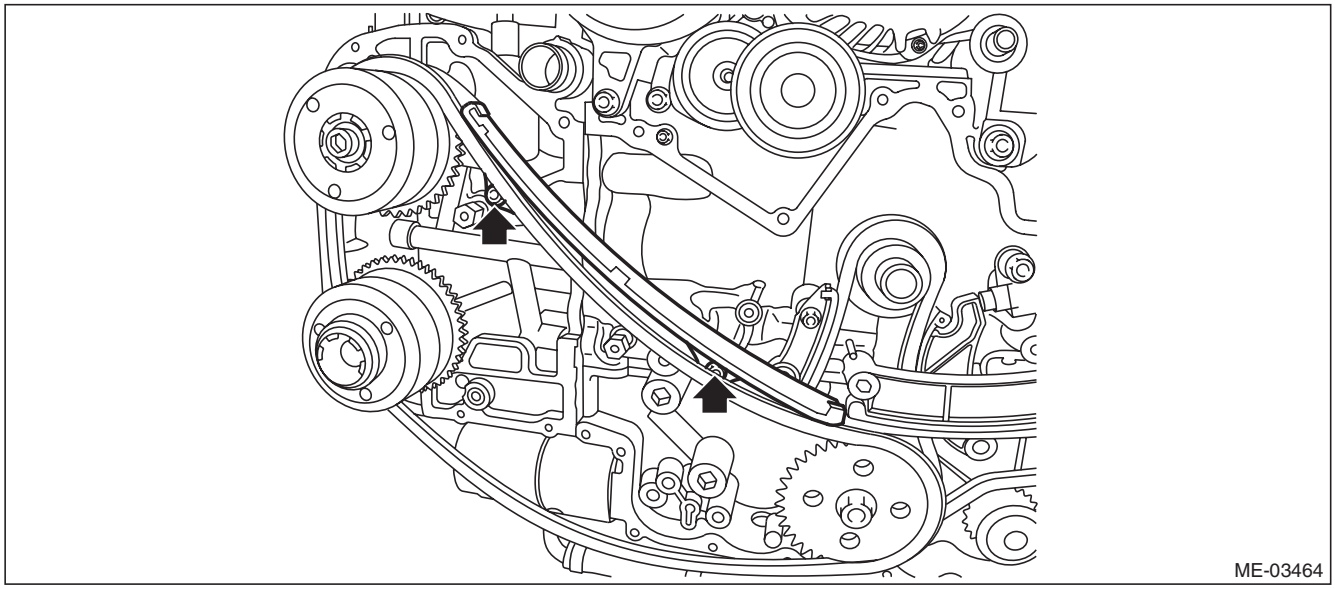

10) Remove the timing chain (RH).

GETtheMANUALS.org

11) Remove the chain tensioner (LH).

NOTE:
When removing chain tensioner (LH), hold the plunger by hand so that it does not come flying out.

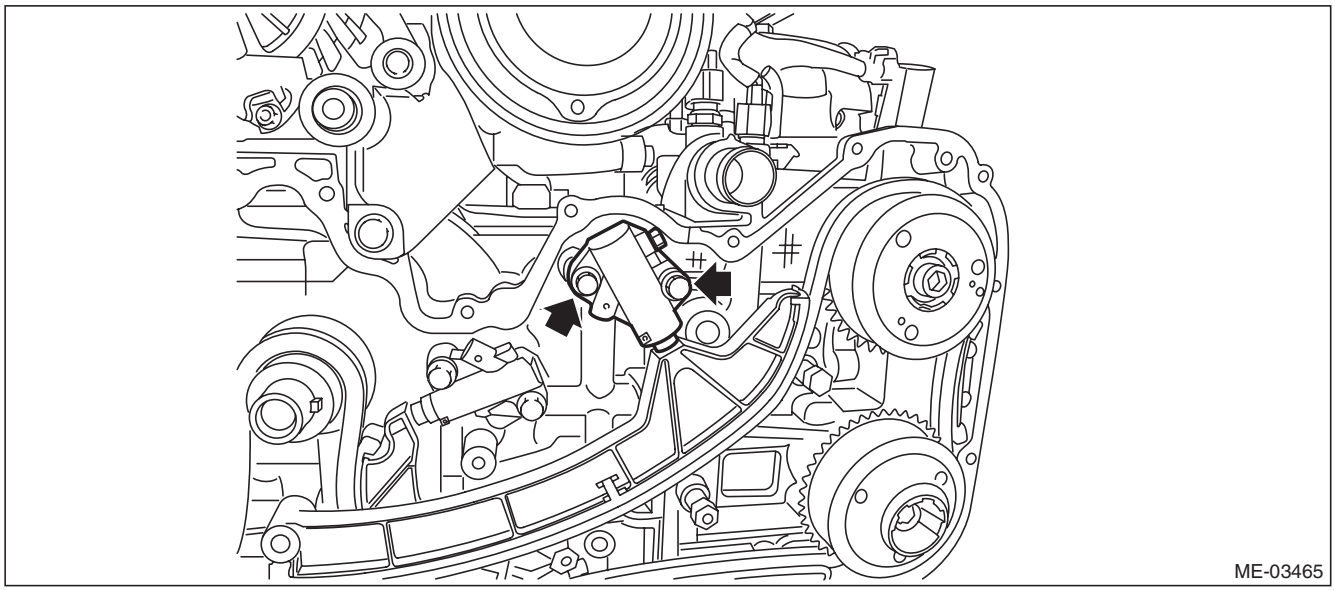

12) Remove the chain guide (LH: between cams).

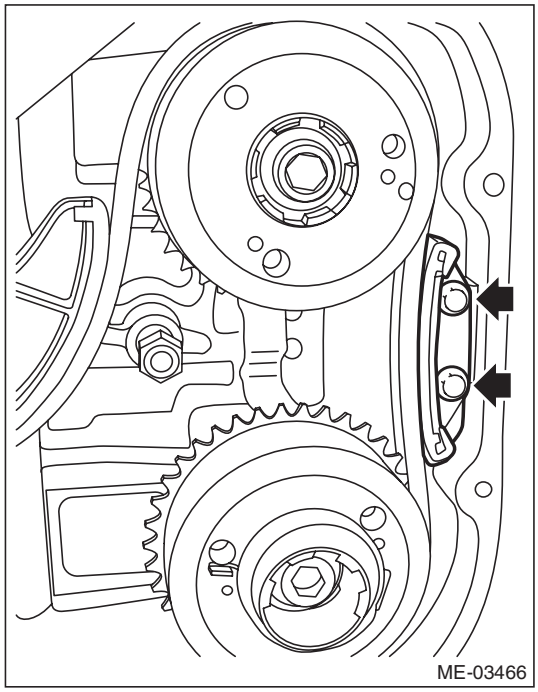

GETtheMANUALS.org

13) Remove the chain tensioner lever (LH).

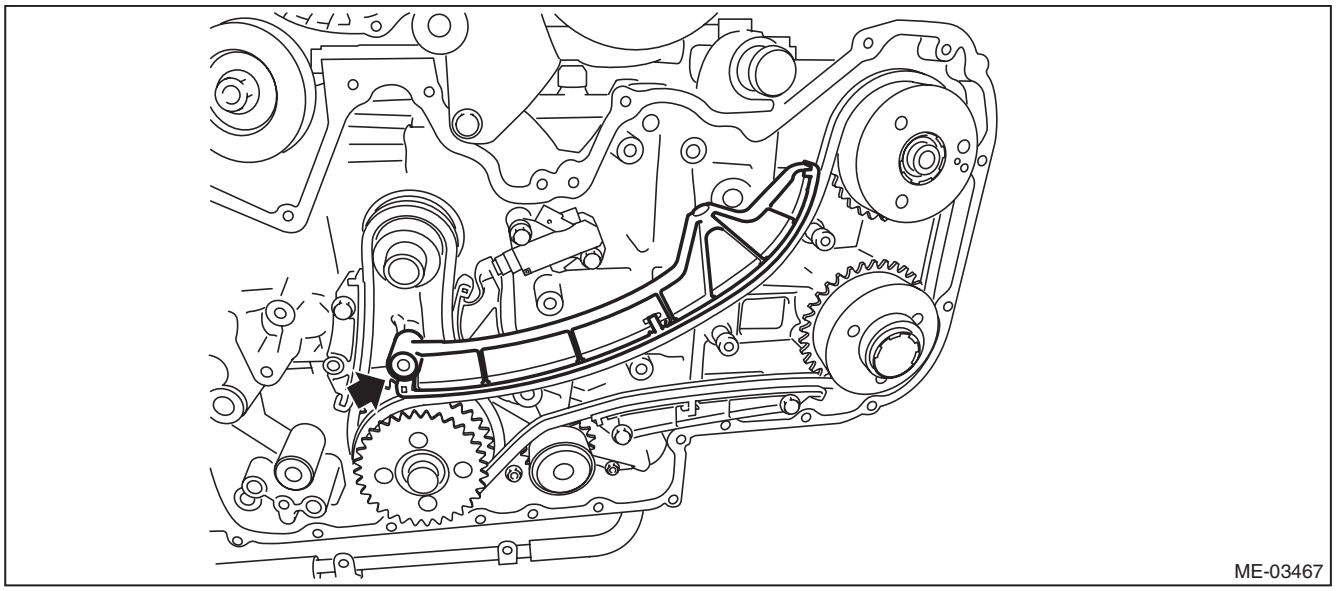

14) Remove the chain guide (LH).

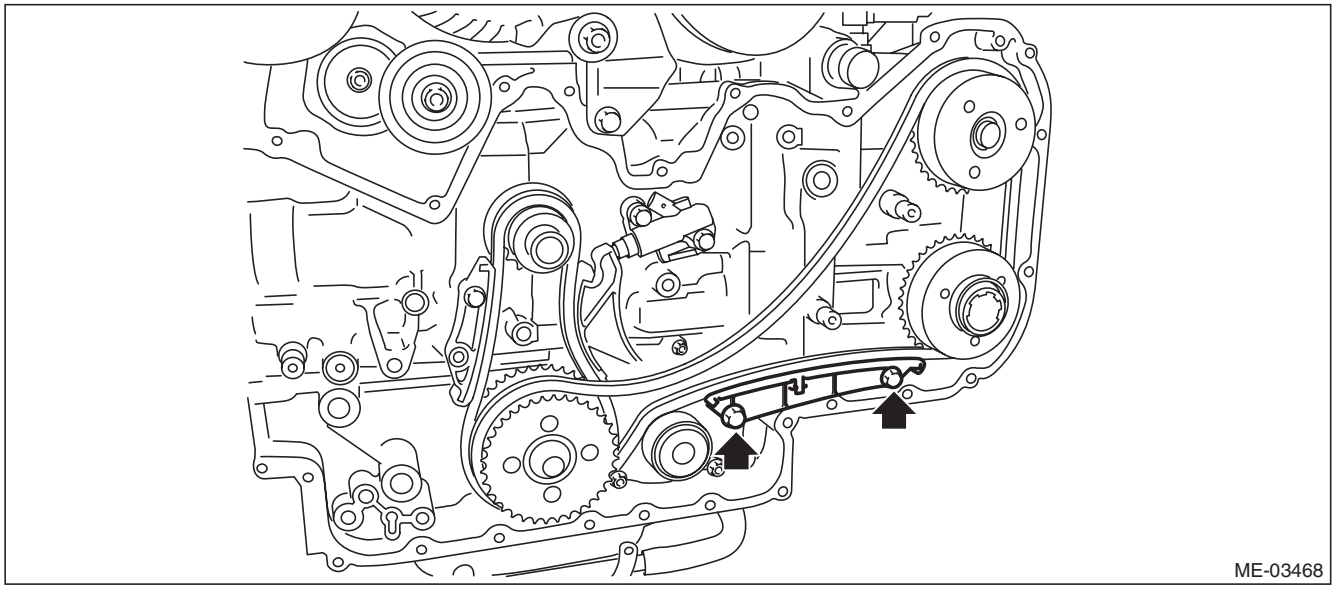

15) Remove the timing chain (LH).

GETtheMANUALS.org

16) Remove the chain tensioner (main).

NOTE:
When removing chain tensioner (main), hold the plunger by hand so that it does not come flying out.

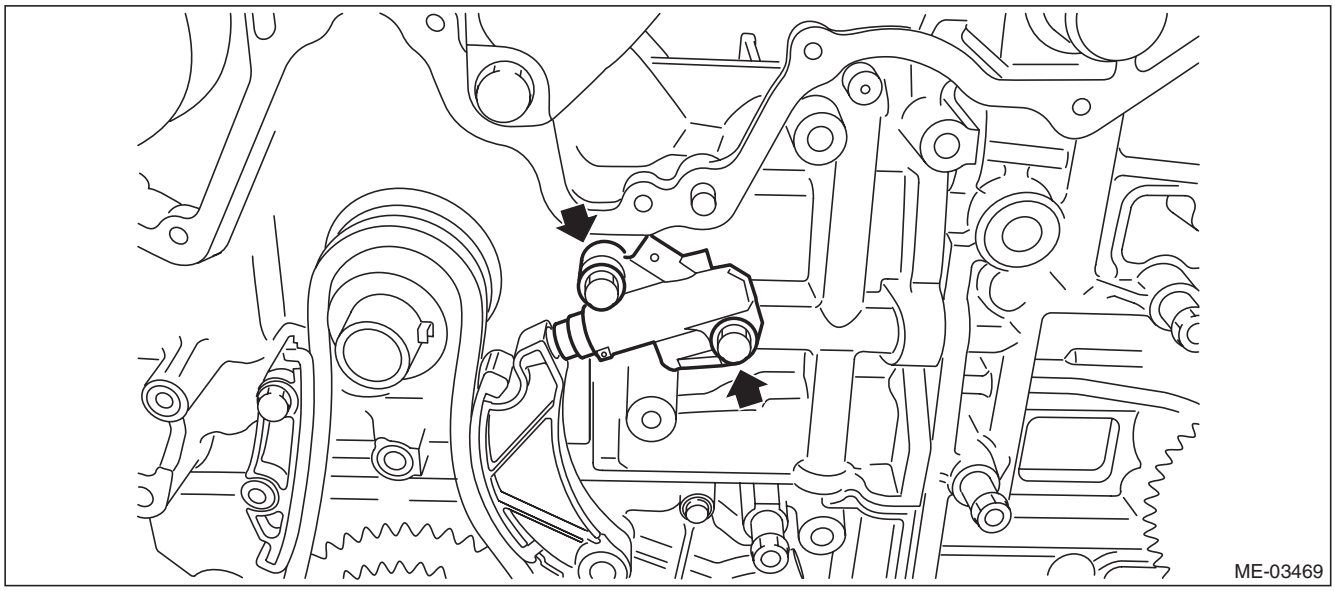

17) Remove the chain guide (main).

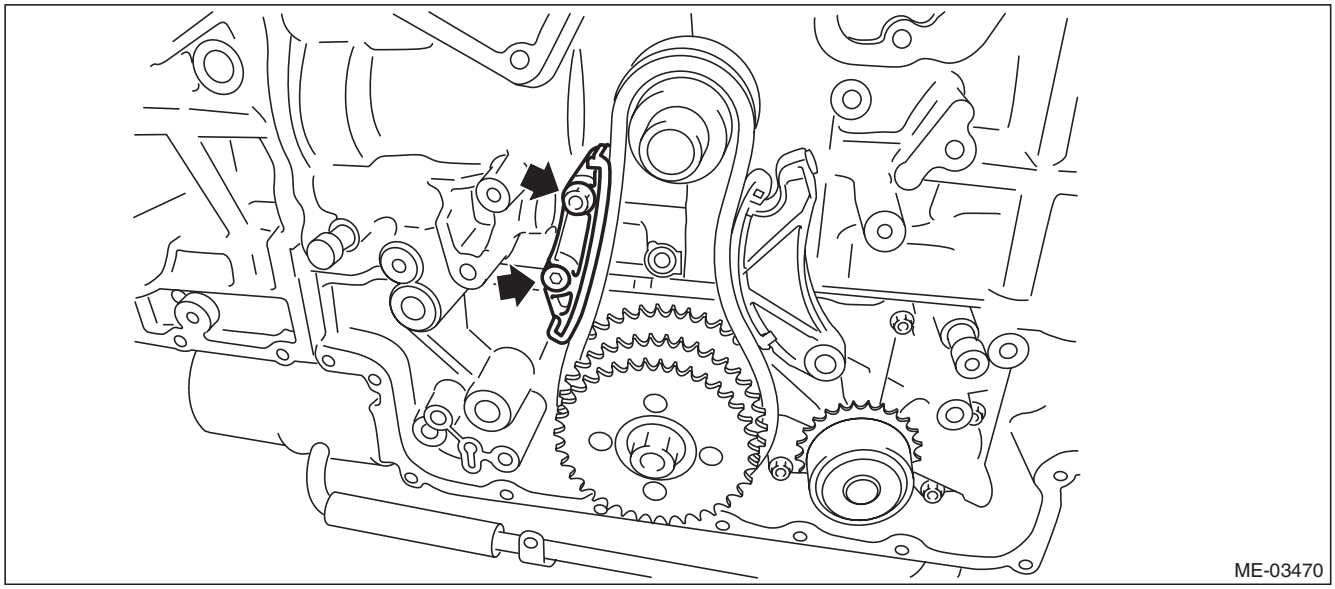

GETtheMANUALS.org

18) Remove the chain tensioner lever (main).

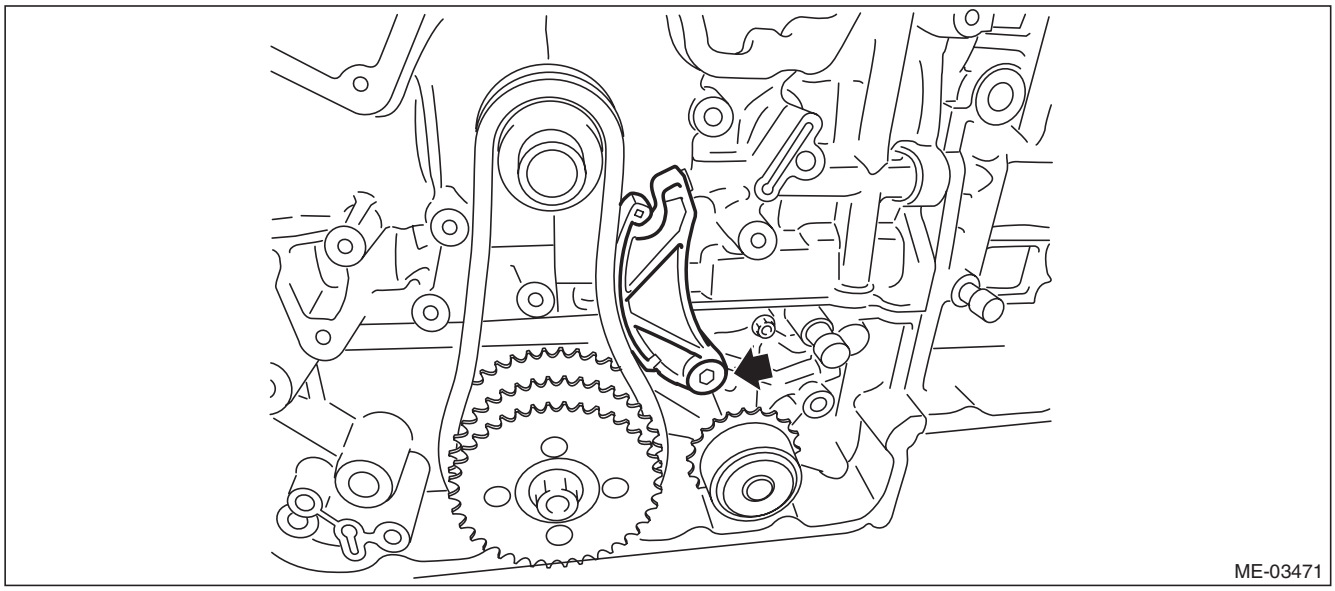

19) Use the ST to lock the idler sprocket, and loosen the idler sprocket bolt.
ST1 18355AA000 PULLEY WRENCH
ST2 18334AA000 PULLEY WRENCH PIN SET
20) Remove the idler sprocket bolts, and remove the idler sprocket and timing chain (main).

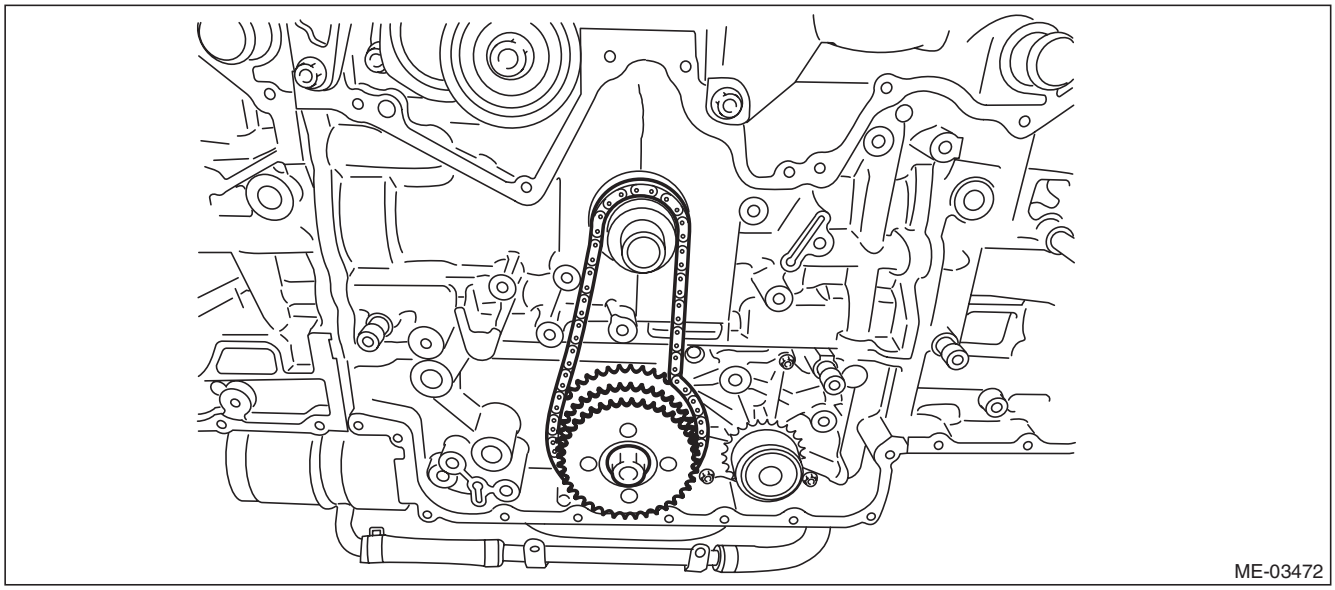

GETtheMANUALS.org

C: INSTALLATION

NOTE:
- Be careful that the foreign matter is not into or onto the assembled component during installation.
- Apply engine oil to all component parts of the timing chain.

1) Prepare to attach the chain tensioner.
   (1) Insert the screw, spring pin and plunger into the tensioner body.
   (2) As shown in the figure, turn the rubber mat counterclockwise while holding the chain tensioner from above by hand.

NOTE:
Degrease the contact surface between the plunger head and rubber mat, so that they do not slip.

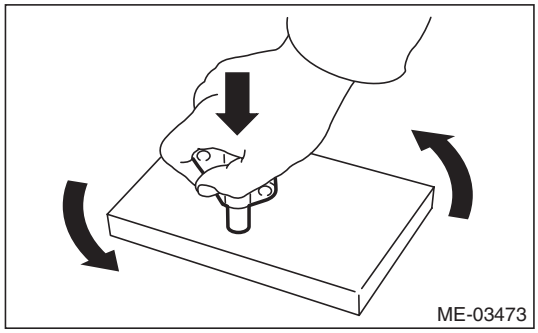

   (3) Insert the stopper pin into the hole on the chain tensioner body.

2) Align the position of oil pump shaft knock pin to six o'clock position as shown in the figure.

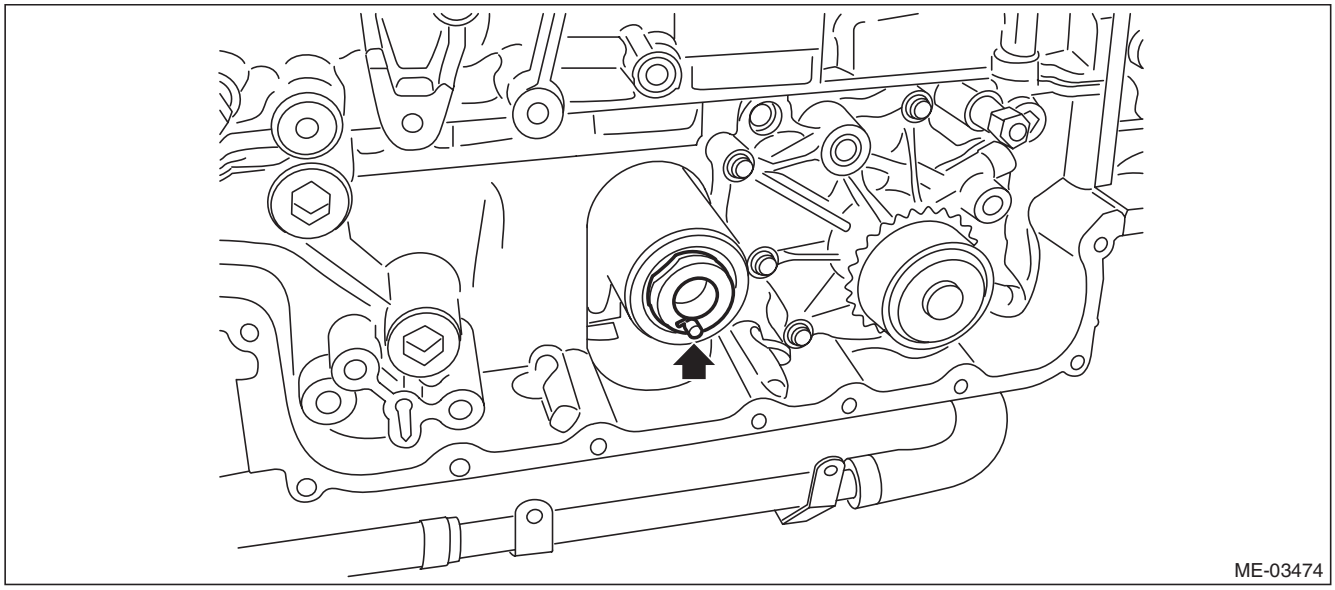

GETtheMANUALS.org

3) Using ST, align the “Top mark” on crank sprocket to nine o’clock position as shown in the figure.
ST 18252AA000 CRANKSHAFT SOCKET

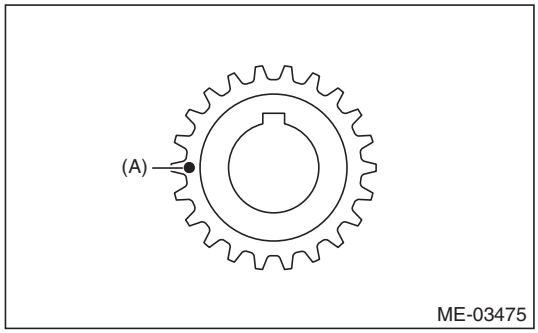

(A) Top mark

4) Align the intake cam sprocket to twelve o’clock position as shown in the figure.
ST 499977500 CAM SPROCKET WRENCH

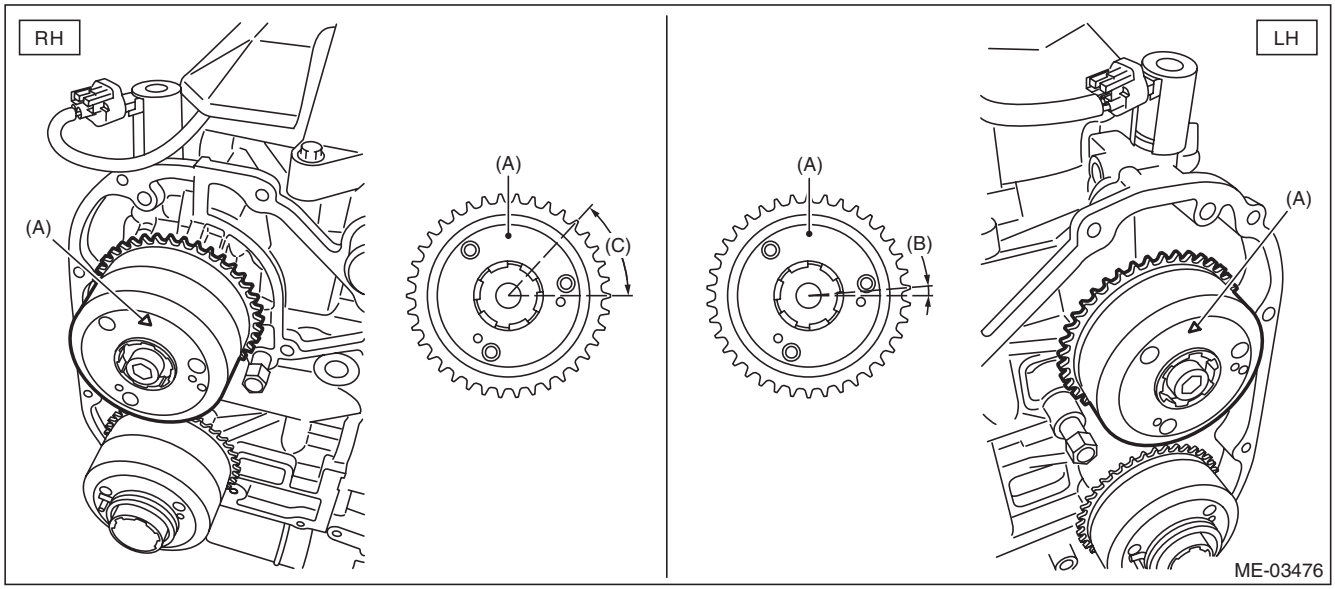

(A) Align the marking (top mark) to twelve o’clock position.
(B) 6°
(C) 47°

GETtheMANUALS.org

5) Align the exhaust cam sprocket to twelve o'clock position as shown in the figure.
ST 499977500 CAM SPROCKET WRENCH

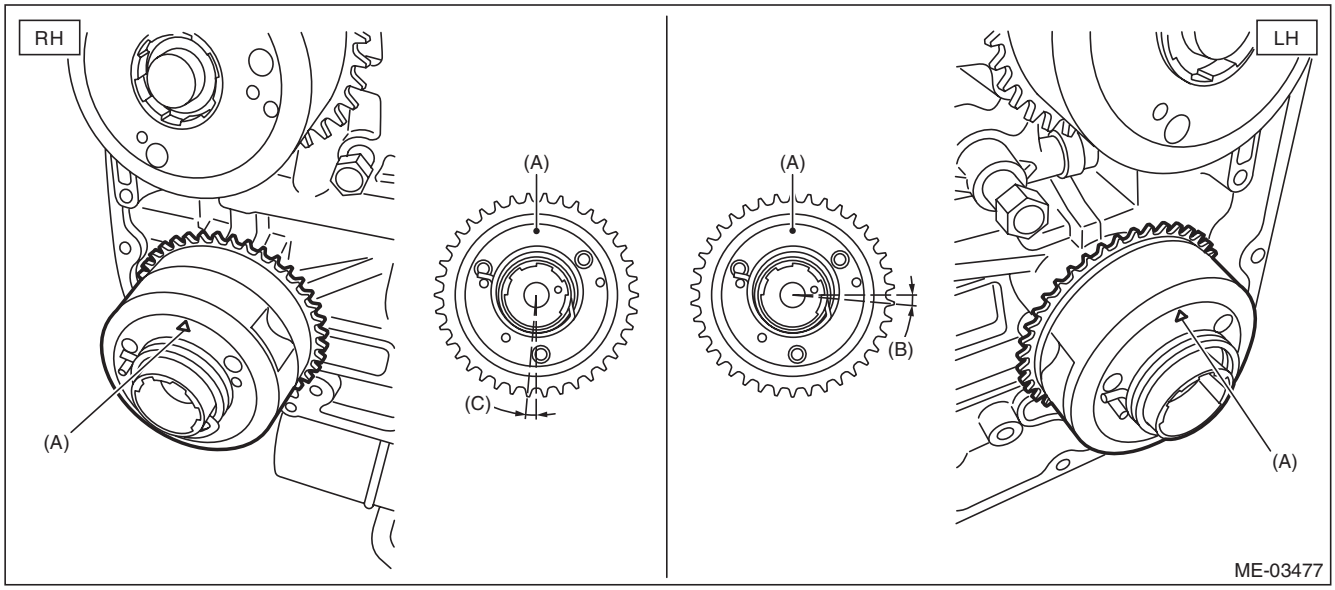

(A) Align the marking (top mark) to twelve o'clock position.
(B) 5.5°
(C) 3.5°

6) Using ST, align the "Top mark" on crank sprocket to twelve o'clock position as shown in the figure.

NOTE:
- The #1 piston is positioned at TDC.
- Do not rotate the crankshaft and cam sprocket before completing timing chain installation.
- At this time, crank sprocket key is at three o'clock position.

ST 18252AA000 CRANKSHAFT SOCKET

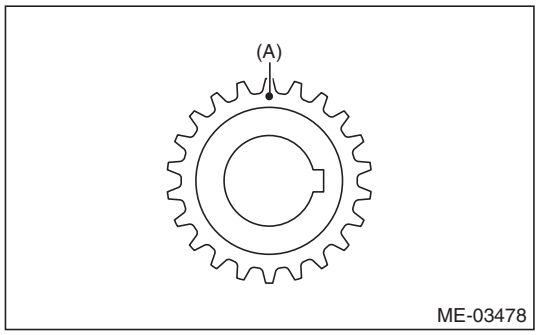

(A) Top mark

GETtheMANUALS.org

7) Install the chain guide (main).

Tightening torque:
16 N·m (1.6 kgf-m, 11.8 ft-lb)

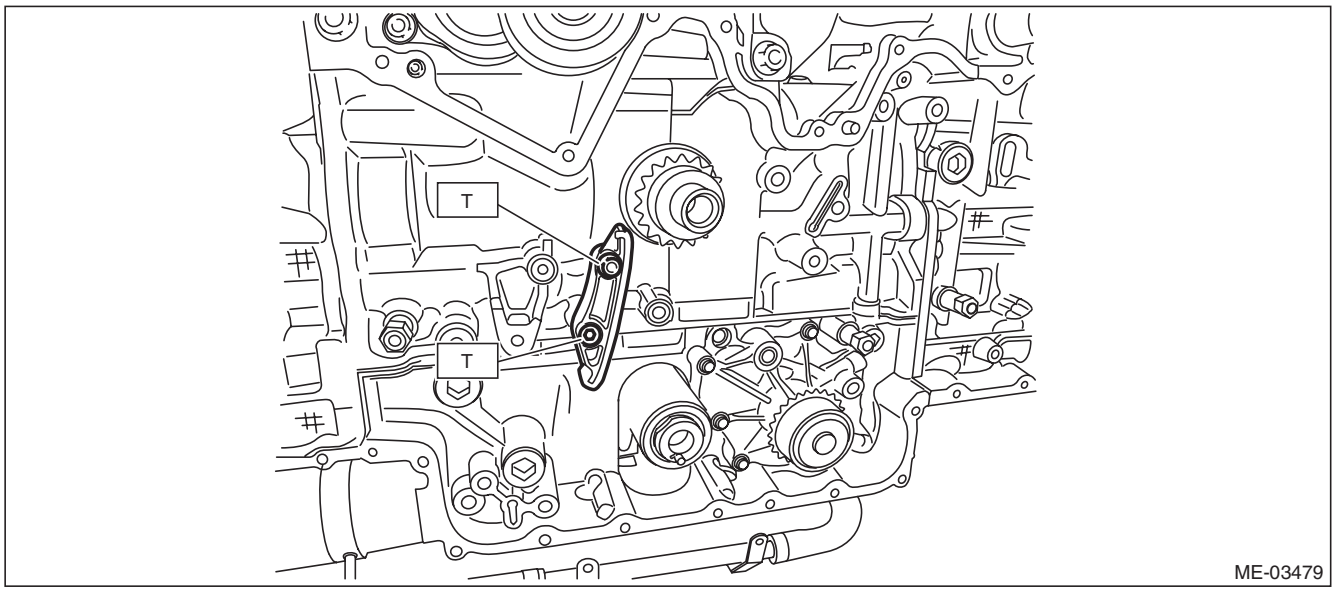

8) Install the idler sprocket and timing chain (main).
(1) Match the timing chain mark (gold) to the timing mark position of the idler sprocket.
(2) Align the idler sprocket timing mark at six o'clock position, and install the idler sprocket and timing chain.
(3) Make sure that the timing chain mark (gold) is located at twelve o'clock position on the crank sprocket.
(4) Use the ST to lock the idler sprocket, and install the idler sprocket bolt.

ST1 18355AA000 PULLEY WRENCH
ST2 18334AA000 PULLEY WRENCH PIN SET

Tightening torque:
120 N·m (12.2 kgf-m, 88.5 ft-lb)

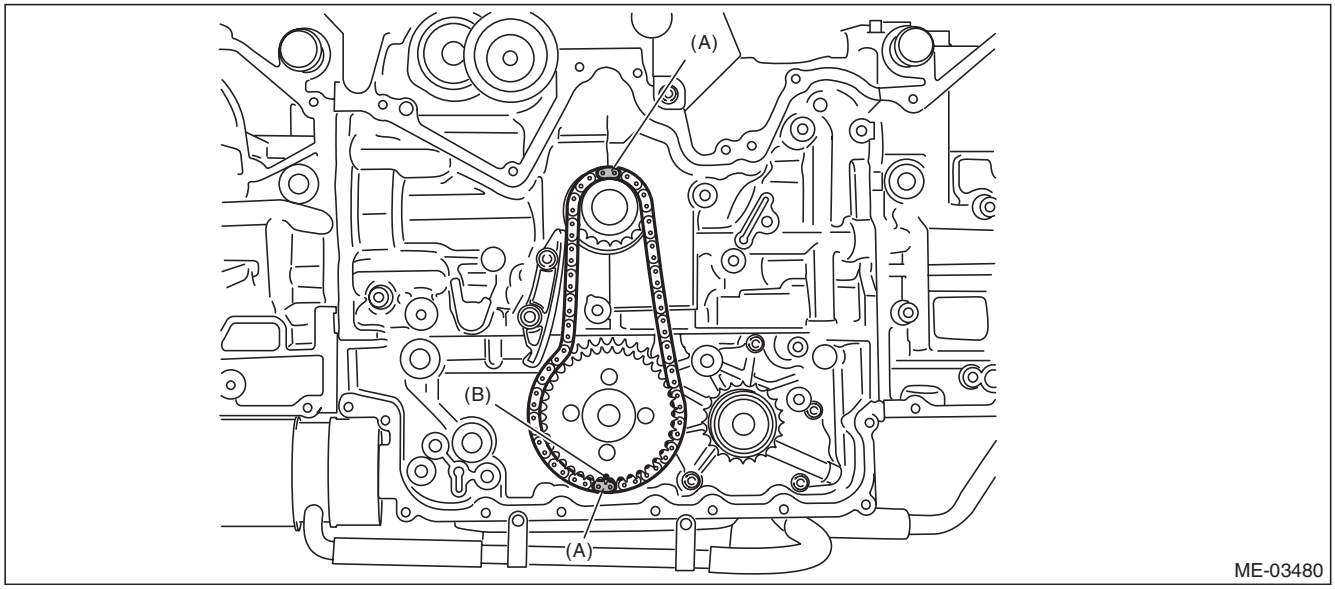

(A) Gold (B) Timing mark

GETtheMANUALS.org

9) Install the chain tensioner lever (main).

Tightening torque:
16 N·m (1.6 kgf-m, 11.8 ft-lb)

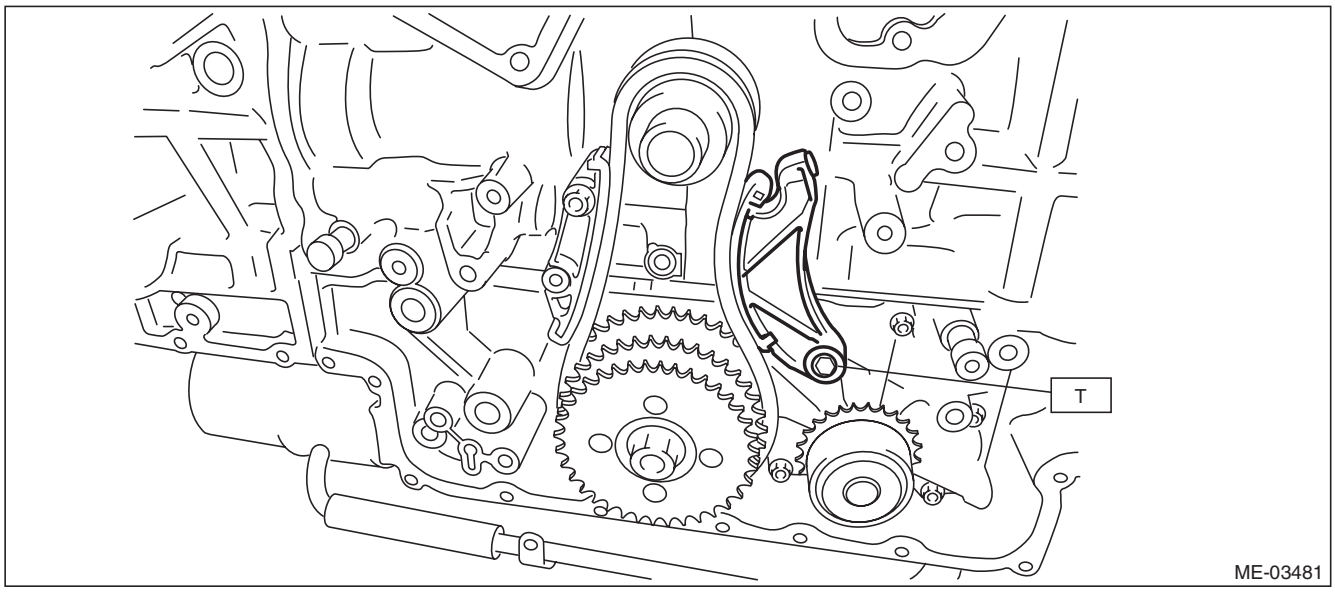

10) Install the chain tensioner (main) and pull out the stopper pin.

NOTE:
The timing chain (main) line will be complete.

Tightening torque:
16 N·m (1.6 kgf-m, 11.8 ft-lb)

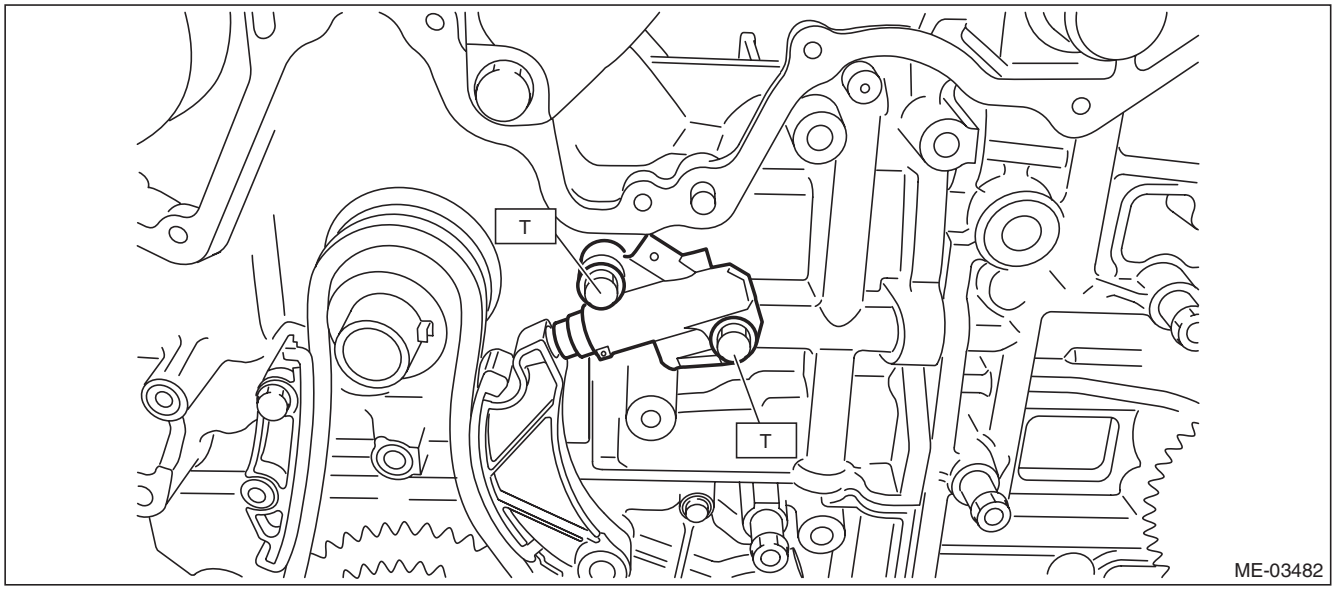

GETtheMANUALS.org

11) Install the chain guide (LH).

Tightening torque:
16 N·m (1.6 kgf-m, 11.8 ft-lb)

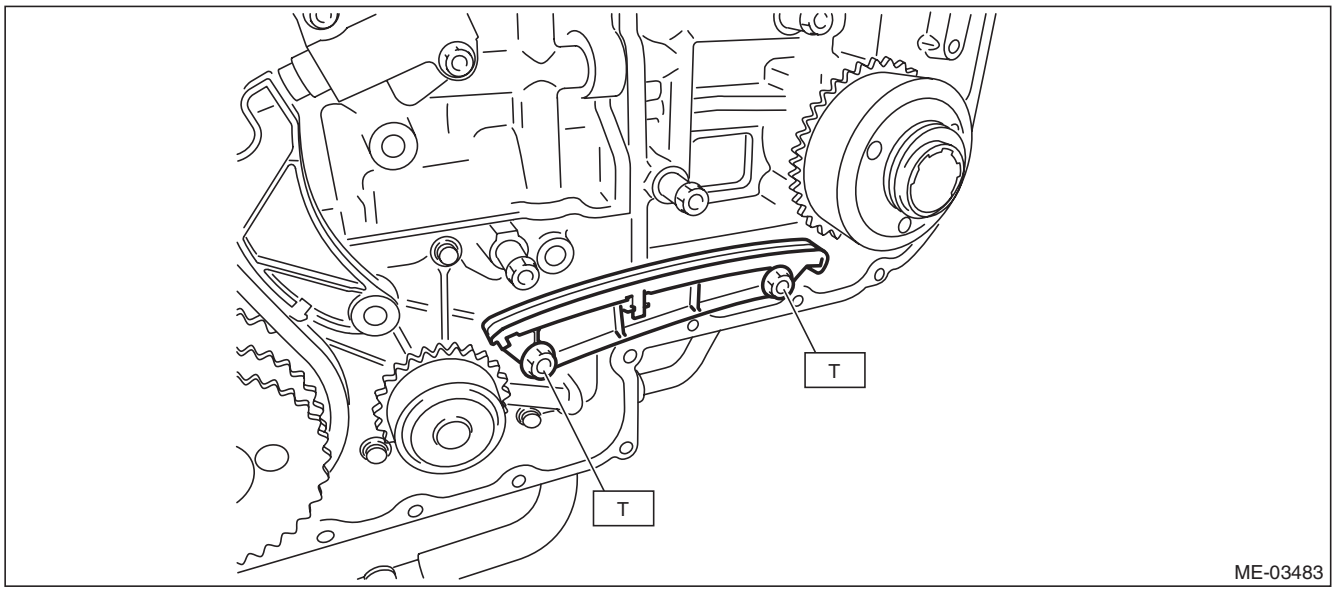

12) Install the chain guide (LH: between cams).

Tightening torque:
6.4 N·m (0.7 kgf-m, 4.7 ft-lb)

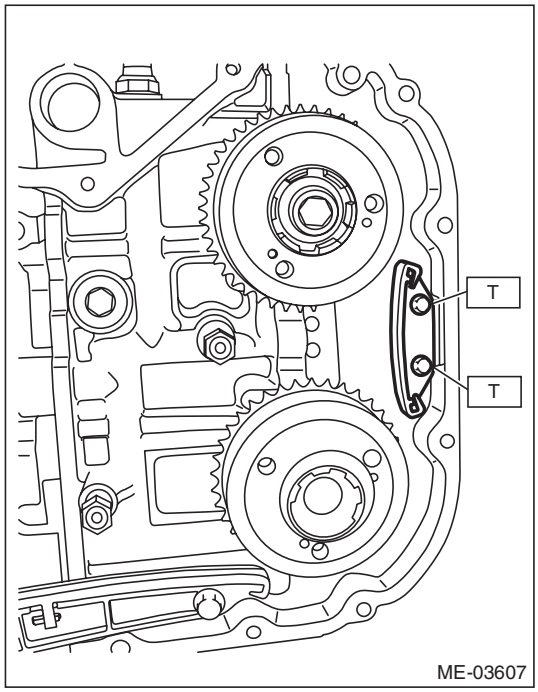

13) Install timing chain (LH).

GETtheMANUALS.org

(1) Match the timing mark of intake cam sprocket (LH) to the timing chain mark (blue).

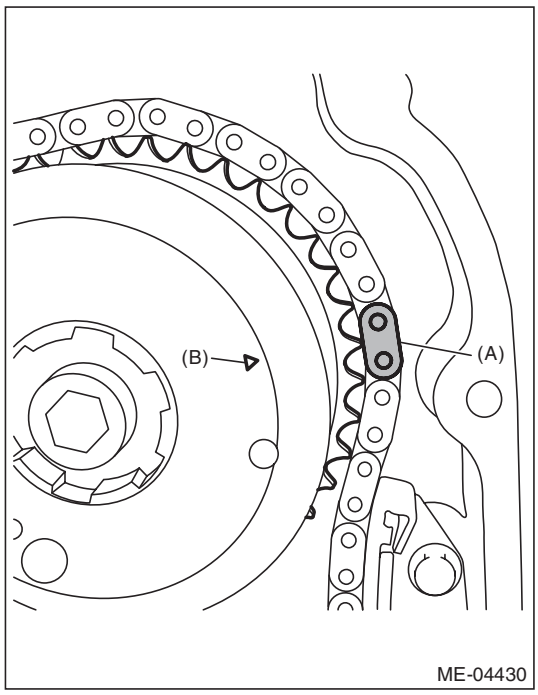

(A) Blue
(B) Timing mark

(2) Match the timing mark of exhaust cam sprocket (LH) to the timing chain mark (blue).

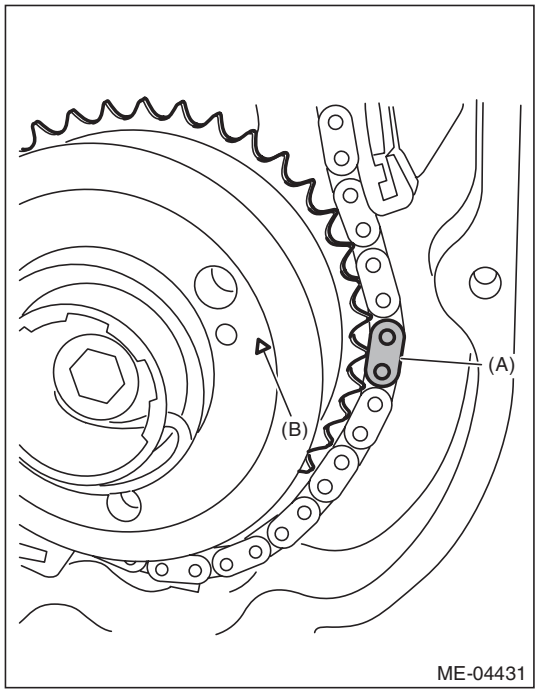

(A) Blue
(B) Timing mark

GETtheMANUALS.org

(3) Install the timing chain to the water pump sprocket.

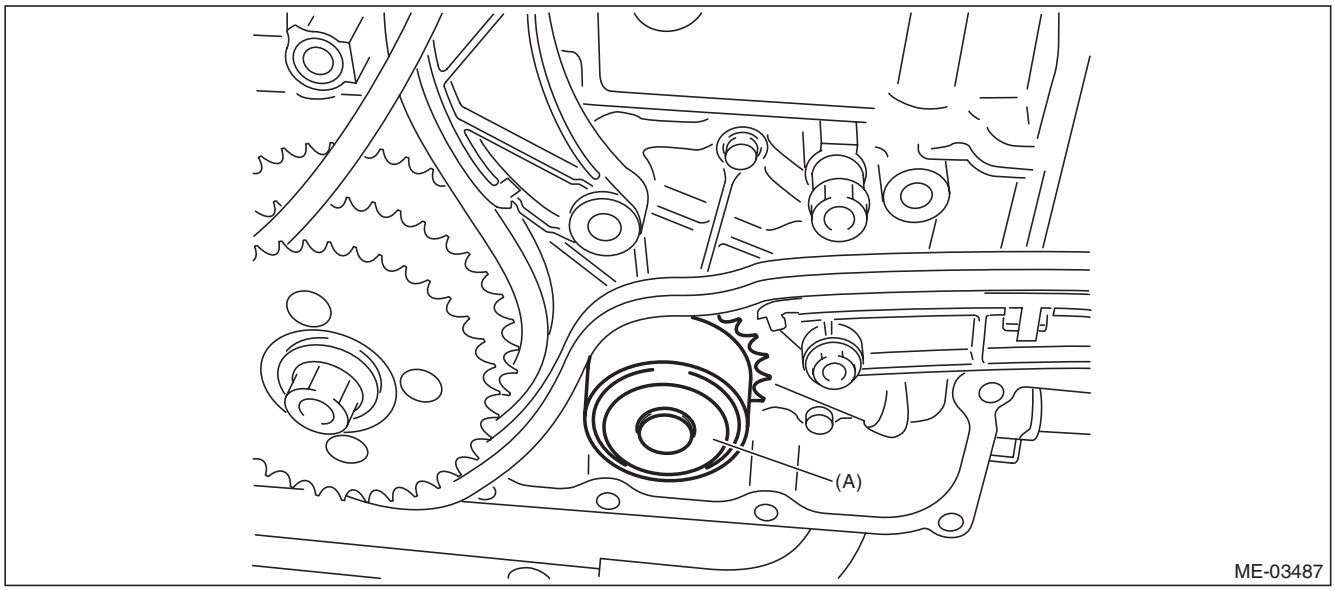

(A) Water pump sprocket

(4) Match the timing mark of idler sprocket to the timing chain mark (gold).

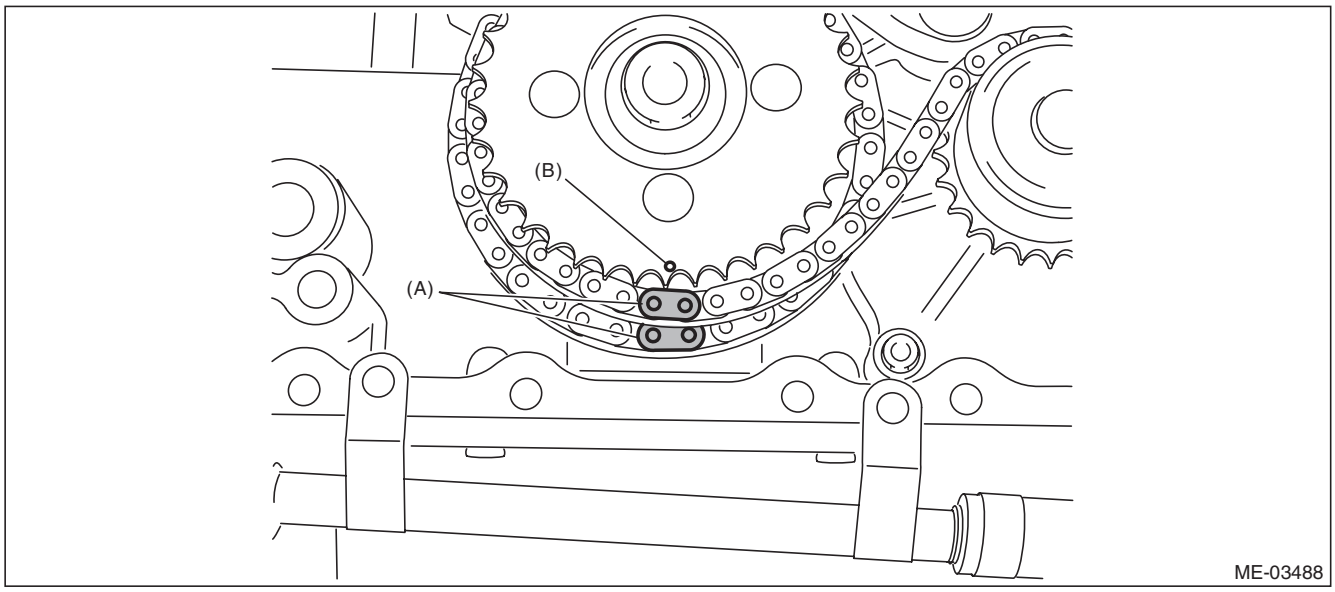

(A) Gold (B) Timing mark

GETtheMANUALS.org

14) Install the chain tensioner lever (LH).

Tightening torque:
16 N·m (1.6 kgf-m, 11.8 ft-lb)

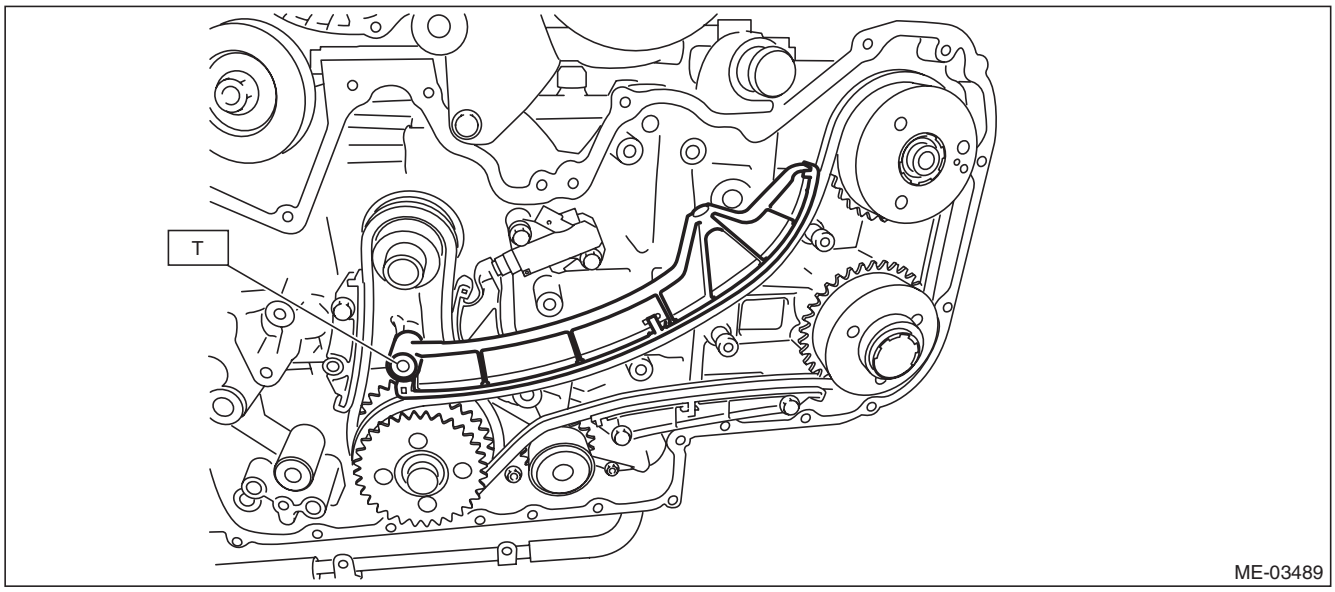

15) Install the chain tensioner (LH) and pull out the stopper pin.

NOTE:
- Make sure that there is a bolt attached on the side face of the chain tensioner housing.
- The timing chain (LH) line will be complete.

Tightening torque:
16 N·m (1.6 kgf-m, 11.8 ft-lb)

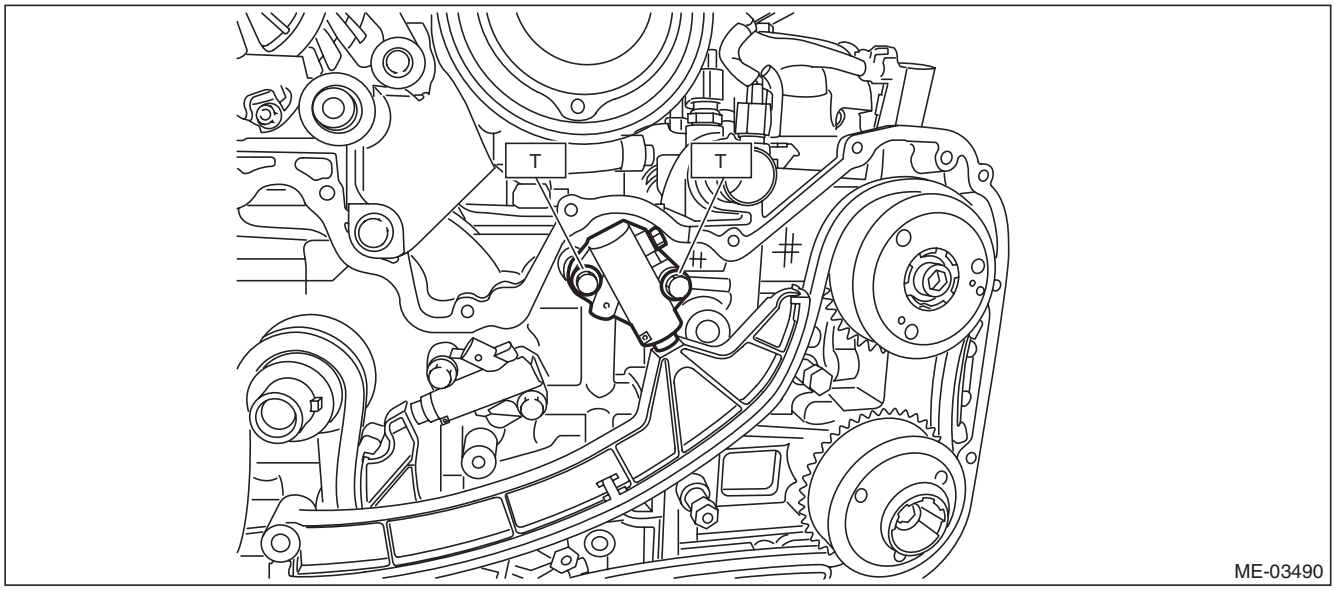

GETtheMANUALS.org

16) Install the chain guide (RH).

Tightening torque:
16 N·m (1.6 kgf-m, 11.8 ft-lb)

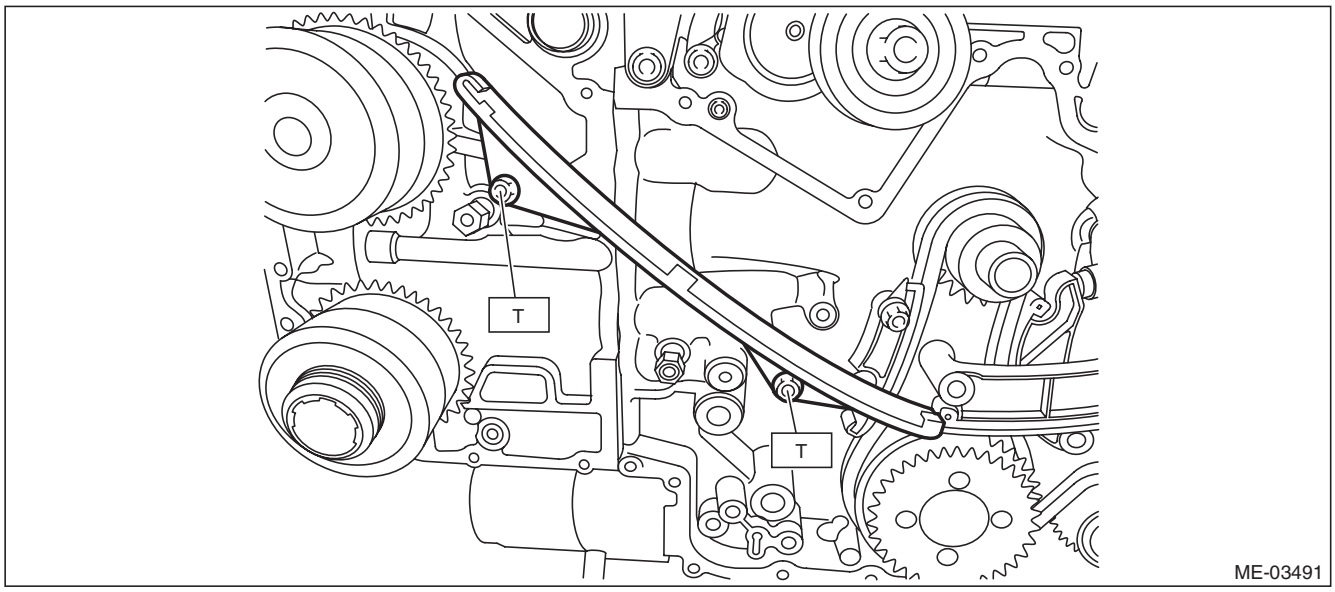

17) Install the chain guide (RH: between cams).

Tightening torque:
6.4 N·m (0.7 kgf-m, 4.7 ft-lb)

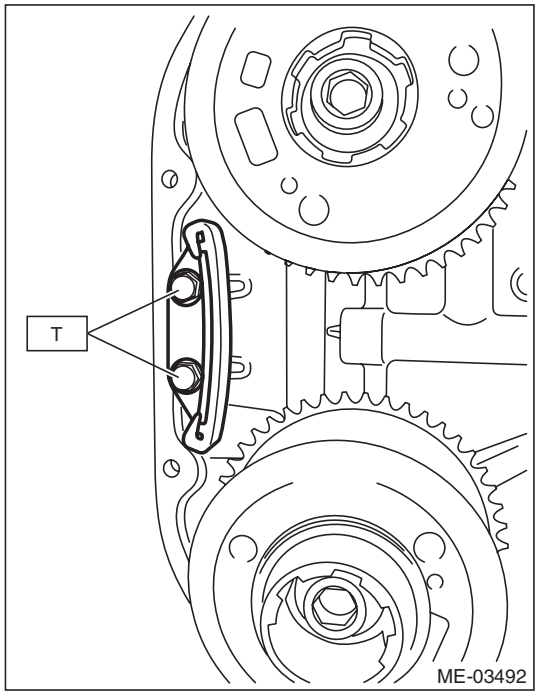

18) Install timing chain (RH).

GETtheMANUALS.org

(1) Match the timing mark of intake cam sprocket (RH) to the timing chain mark (blue).

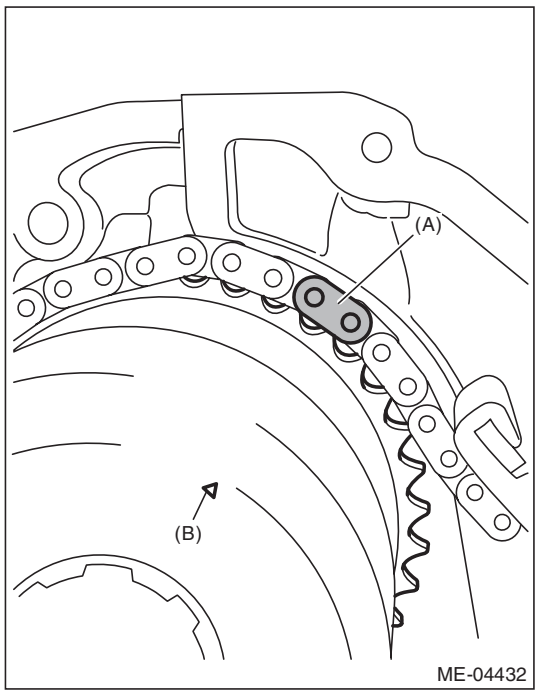

(A) Blue
(B) Timing mark

(2) Match the timing mark of exhaust cam sprocket (RH) to the timing chain mark (blue).

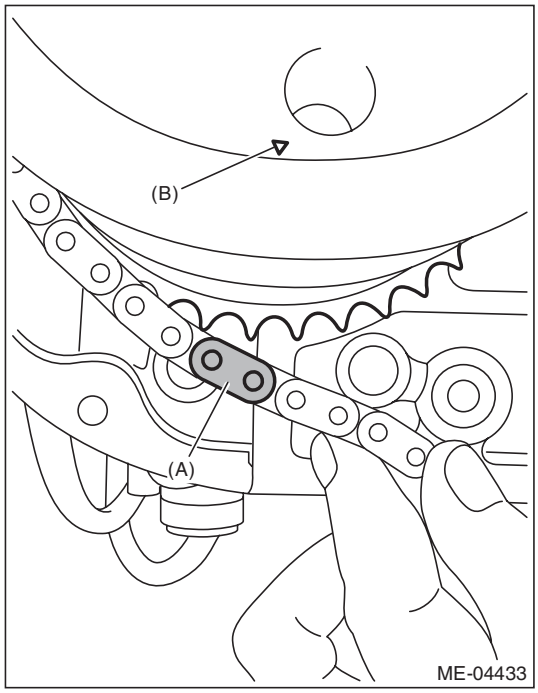

(A) Blue
(B) Timing mark

GETtheMANUALS.org

(3) Match the timing mark of idler sprocket to the timing chain mark (gold).

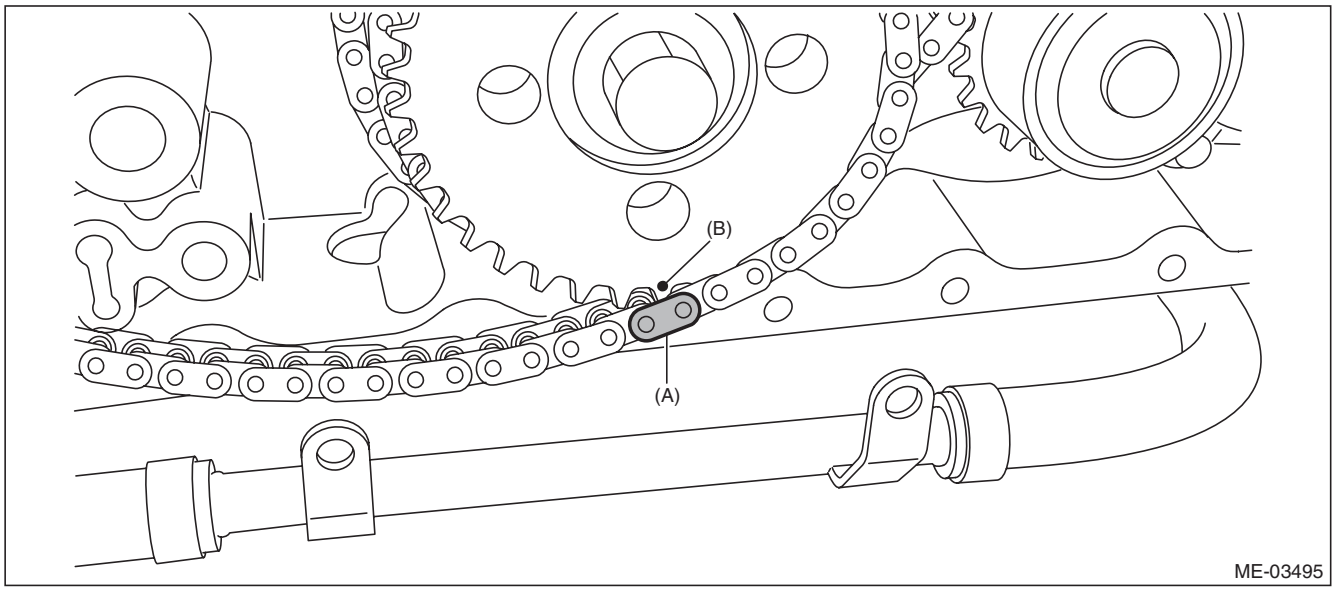

(A) Gold (B) Timing mark

19) Install the chain tensioner lever (RH).

Tightening torque:
16 N·m (1.6 kgf-m, 11.8 ft-lb)

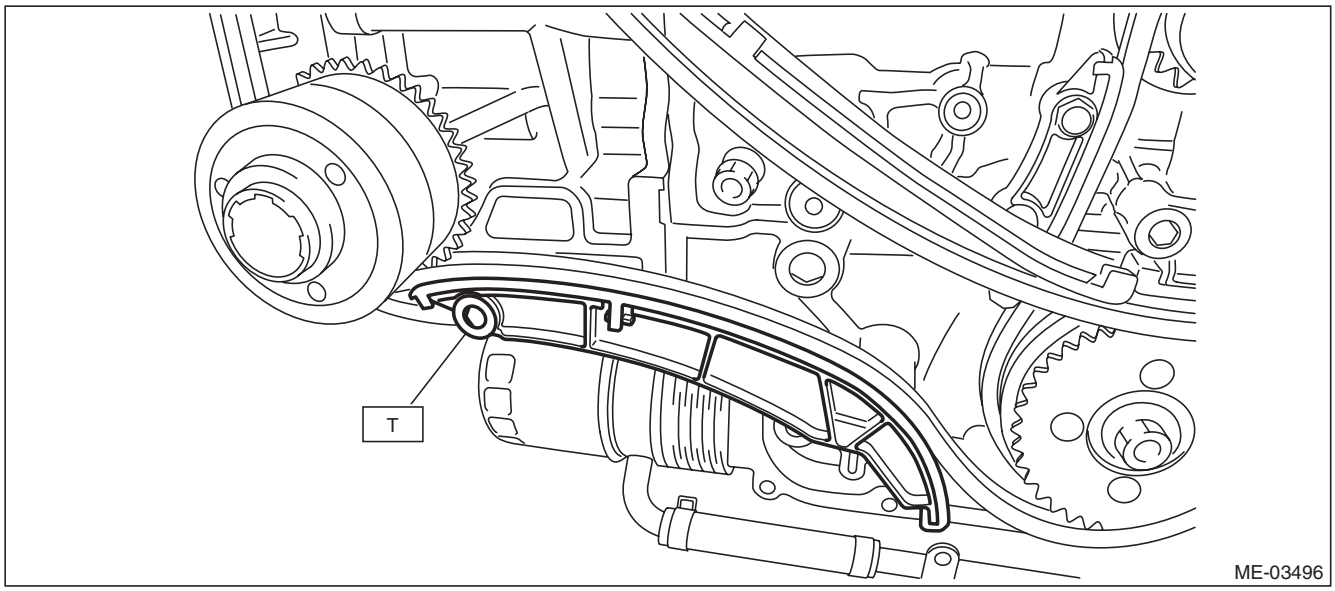

GETtheMANUALS.org

20) Install the chain tensioner (RH) and pull out the stopper pin.

NOTE:
The timing chain (RH) line will be complete.

Tightening torque:
16 N·m (1.6 kgf-m, 11.8 ft-lb)

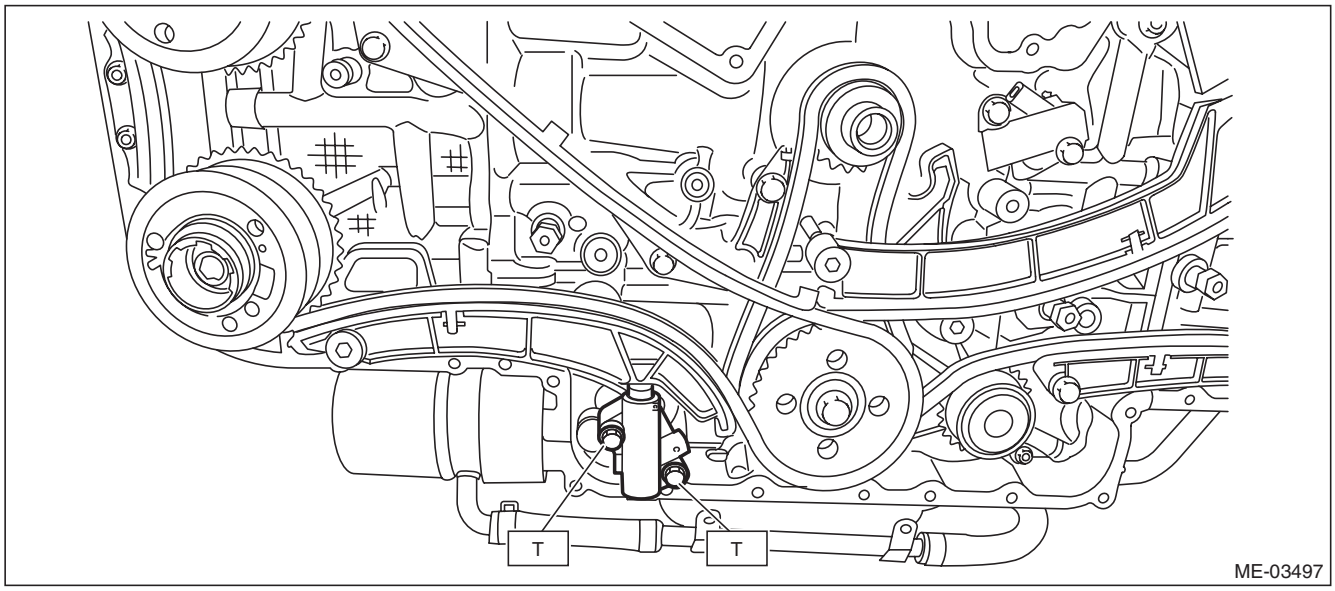

21) After installation, perform the following confirmations.

CAUTION:
Always make sure to perform this confirmation.
(1) Make sure that the timing mark of idler sprocket is aligned to three timing chain marks (gold).
(2) Make sure that the twelve o'clock position on the crank sprocket is aligned to the timing chain (main) mark (gold).
(3) Make sure that the LH side cam sprocket timing mark is aligned to the timing chain mark (blue).
(4) Make sure that the RH side cam sprocket timing mark is aligned to the timing chain mark (blue).
(5) Make sure that all bolts are tightened at the specified torque.

22) Using the ST, turn the crankshaft in the direction of engine rotation, and make sure that there are no abnormal conditions.

CAUTION:
Always make sure to perform this confirmation.

23) Install the chain cover. <Ref. to ME(H6DO)-56, INSTALLATION, Chain Cover.>
24) Install the crank pulley. <Ref. to ME(H6DO)-52, INSTALLATION, Crank Pulley.>
25) Install the V-belts. <Ref. to ME(H6DO)-51, INSTALLATION, V-belt.>
26) Fill engine oil. <Ref. to LU(H6DO)-9, REPLACEMENT, Engine Oil.>
27) Make sure there is no oil leaks in the chain cover mating surface.
28) Install the radiator. <Ref. to CO(H6DO)-18, INSTALLATION, Radiator.>

GETtheMANUALS.org

16. Cam Sprocket

A: REMOVAL

1) Remove the V-belts. <Ref. to ME(H6DO)-51, REMOVAL, V-belt.>
2) Remove the crank pulley. <Ref. to ME(H6DO)-52, REMOVAL, Crank Pulley.>
3) Remove the chain cover. <Ref. to ME(H6DO)-53, REMOVAL, Chain Cover.>
4) Remove the timing chain assembly. <Ref. to ME(H6DO)-63, REMOVAL, Timing Chain Assembly.>
5) Use the ST to lock the cam sprocket, and remove the cam sprocket bolt.

ST 499977500 CAM SPROCKET WRENCH

- IN side

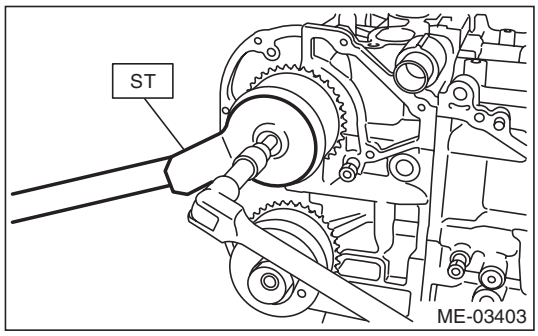

- EX side

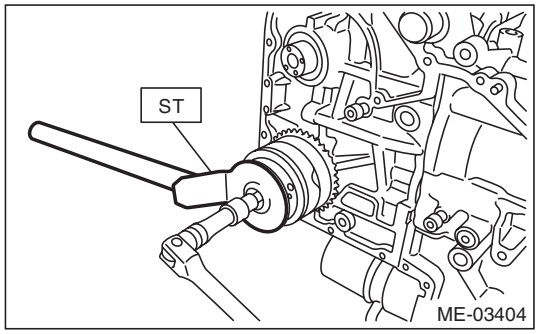

6) Remove the cam sprocket.

B: INSTALLATION

1) Remove the cam sprocket.
2) Use the ST to lock the cam sprocket, and install the cam sprocket bolt.

Tightening torque:
Tighten to 29.5 N·m (3.0 kgf-m, 21.8 ft-lb) of torque, and then tighten further by 45°.

ST 499977500 CAM SPROCKET WRENCH

- IN side

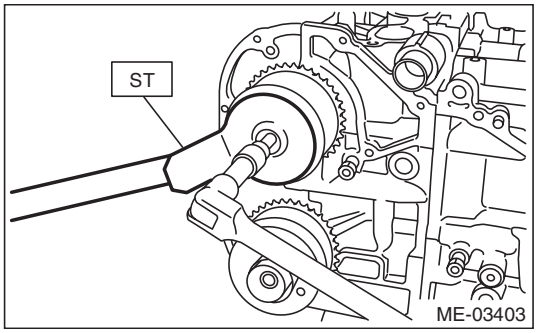

- EX side

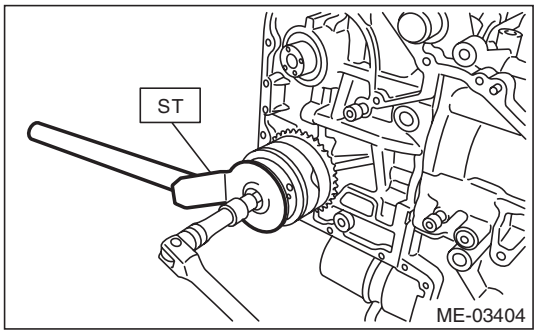

3) Install the timing chain assembly. <Ref. to ME(H6DO)-69, INSTALLATION, Timing Chain Assembly.>
4) Install the chain cover. <Ref. to ME(H6DO)-56, INSTALLATION, Chain Cover.>
5) Install the crank pulley. <Ref. to ME(H6DO)-52, INSTALLATION, Crank Pulley.>
6) Install the V-belts. <Ref. to ME(H6DO)-51, INSTALLATION, V-belt.>

C: INSPECTION

1) Check the cam sprocket teeth for abnormal wear and scratches.
2) Make sure there is no free play between cam sprocket and key.

GETtheMANUALS.org

17. Crank Sprocket

A: REMOVAL

1) Remove the V-belts. <Ref. to ME(H6DO)-51, REMOVAL, V-belt.>
2) Remove the crank pulley. <Ref. to ME(H6DO)-52, REMOVAL, Crank Pulley.>
3) Remove the chain cover. <Ref. to ME(H6DO)-53, REMOVAL, Chain Cover.>
4) Remove the timing chain assembly. <Ref. to ME(H6DO)-63, REMOVAL, Timing Chain Assembly.>
5) Remove the crank sprocket (A).

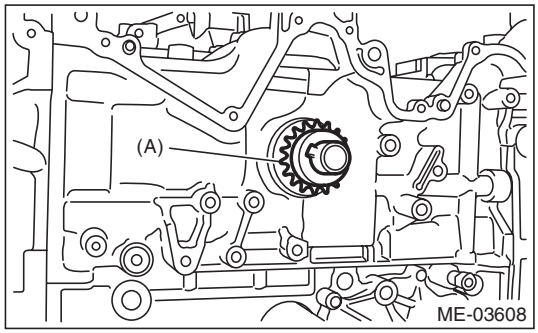

B: INSTALLATION

1) Install the crank sprocket (A).

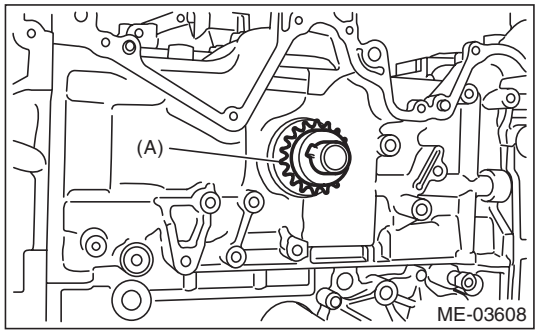

2) Install the timing chain assembly. <Ref. to ME(H6DO)-69, INSTALLATION, Timing Chain Assembly.>
3) Install the chain cover. <Ref. to ME(H6DO)-56, INSTALLATION, Chain Cover.>
4) Install the crank pulley. <Ref. to ME(H6DO)-52, INSTALLATION, Crank Pulley.>
5) Install the V-belts. <Ref. to ME(H6DO)-51, INSTALLATION, V-belt.>

C: INSPECTION

1) Check the crank sprocket teeth for abnormal wear and scratches.
2) Make sure there is no free play between crank sprocket and key.

GETtheMANUALS.org

18. Camshaft

A: REMOVAL

1) Remove the engine from vehicle. <Ref. to ME(H6DO)-36, REMOVAL, Engine Assembly.>
2) Remove the crank pulley. <Ref. to ME(H6DO)-52, REMOVAL, Crank Pulley.>
3) Remove the chain cover. <Ref. to ME(H6DO)-53, REMOVAL, Chain Cover.>
4) Remove the timing chain assembly. <Ref. to ME(H6DO)-63, REMOVAL, Timing Chain Assembly.>
5) Remove the cam sprocket. <Ref. to ME(H6DO)-82, REMOVAL, Cam Sprocket.>
6) Remove the crank sprocket. <Ref. to ME(H6DO)-83, REMOVAL, Crank Sprocket.>
7) Remove the exhaust oil flow control solenoid valve. <Ref. to FU(H6DO)-47, REMOVAL, Oil Flow Control Solenoid Valve.>
8) Remove the camshaft position sensor. <Ref. to FU(H6DO)-34, REMOVAL, Camshaft Position Sensor.>
9) Loosen the rocker cover bolts in the order indicated in the figure, and remove the rocker cover.

- LH side

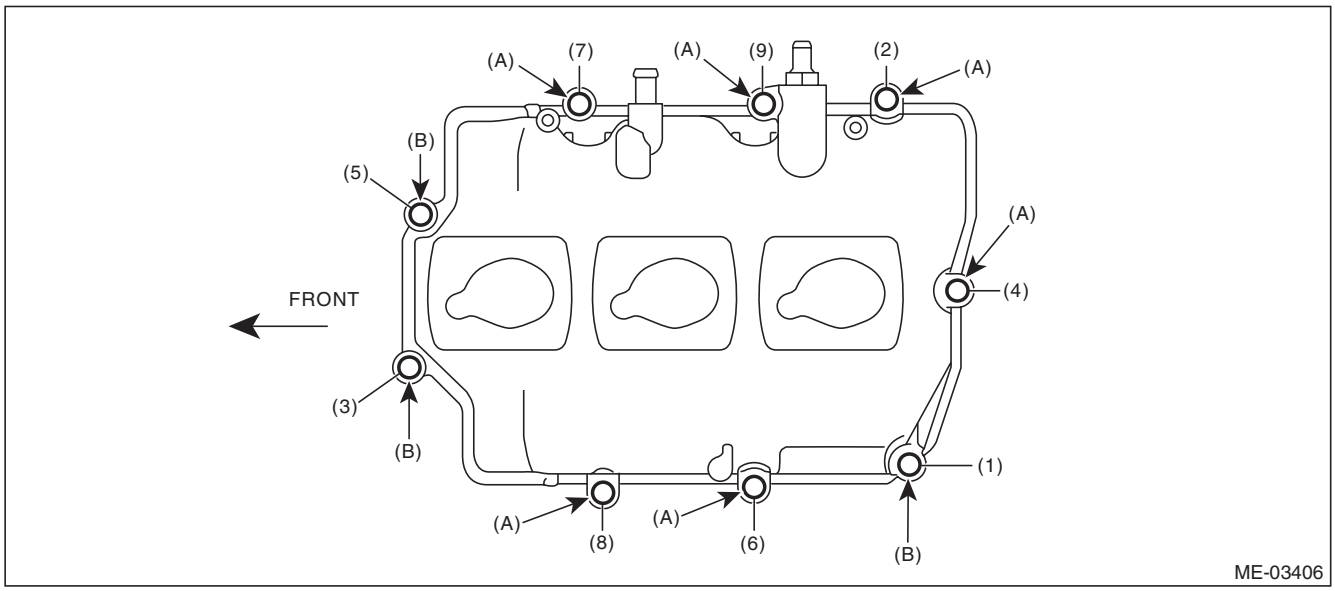

(A) M6 × 39.5 (B) M6 × 26.3

GETtheMANUALS.org

- RH side

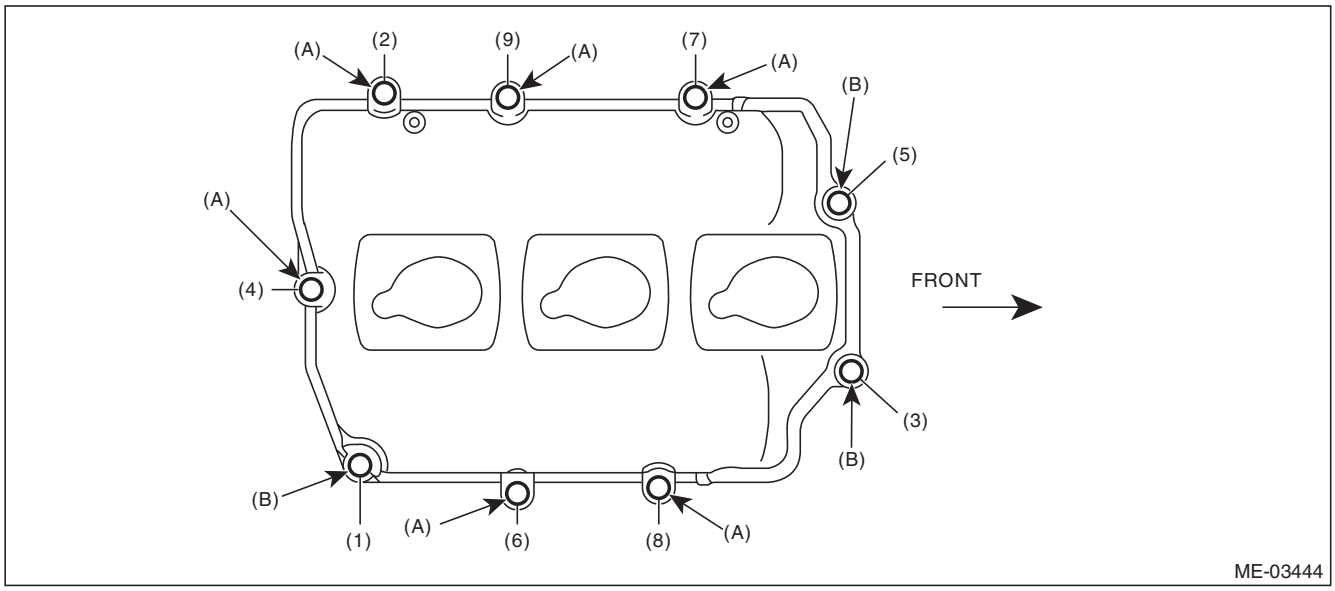

(A) M6 × 39.5 (B) M6 × 26.3

10) Loosen the camshaft cap bolts equally, a little at a time in numerical sequence, as shown in the figure.

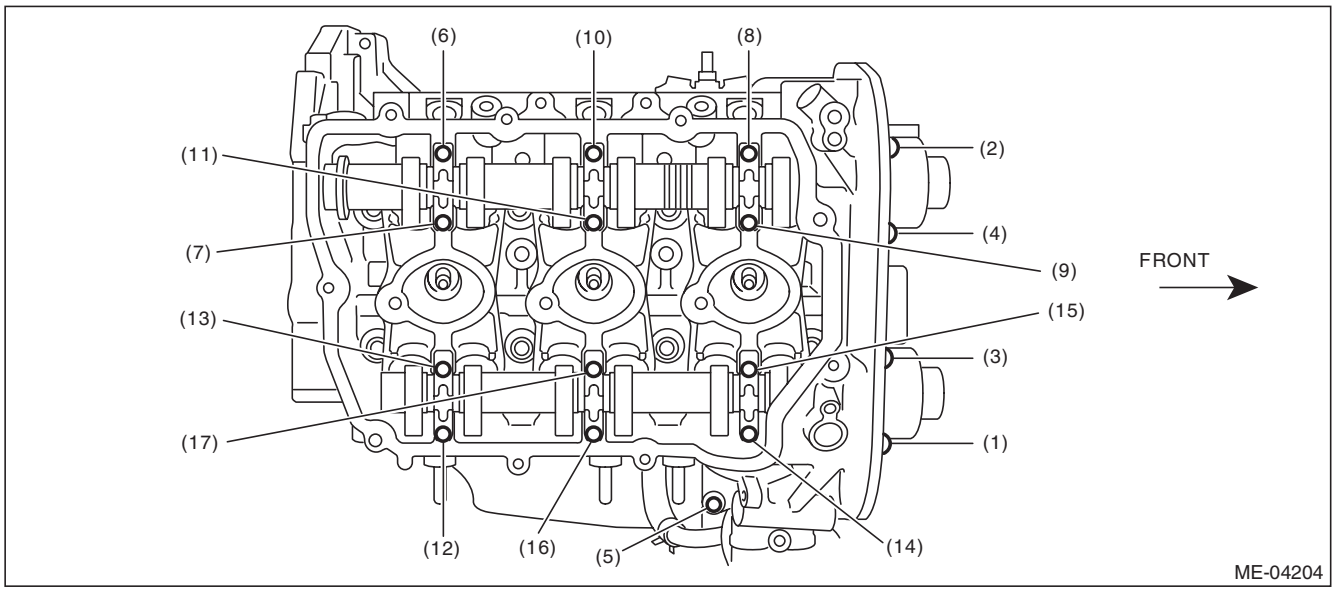

11) Remove the camshaft caps and camshaft (RH).

NOTE:
Arrange camshaft caps in order so that they can be installed in their original positions.

12) Similarly, remove the camshaft (LH) and related parts.

B: INSTALLATION

1) Apply engine oil to camshaft journals, and install the camshaft.
2) Install the camshaft cap.
   (1) Apply liquid gasket sparingly to back side of the front camshaft cap as shown in the figure.

NOTE:
- Install within 5 min. after applying liquid gasket.
- Do not apply liquid gasket excessively. Applying excessively may cause excess gasket to come out and flow toward cam journal, resulting in engine seizure.

GETtheMANUALS.org

Liquid gasket:
THREE BOND 1217G (Part No. K0877Y0100) or equivalent

Liquid gasket applying diameter:
2.0±0.5 mm (0.079±0.020 in)

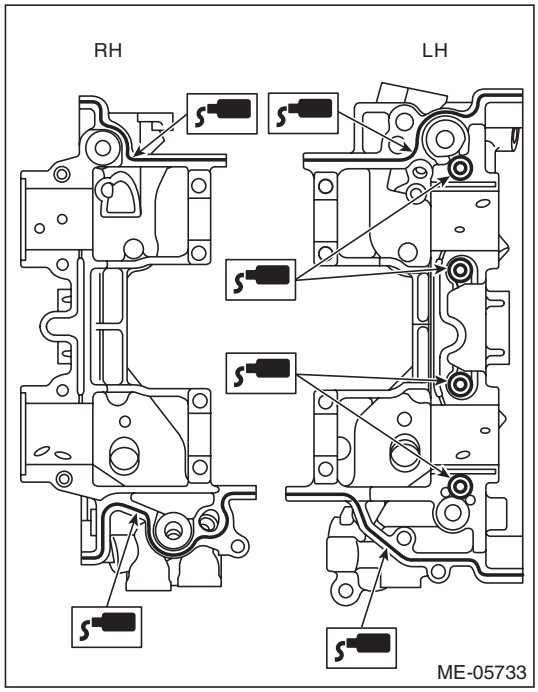

(2) Install the O-ring to the front camshaft cap.

NOTE:
Use new O-rings.

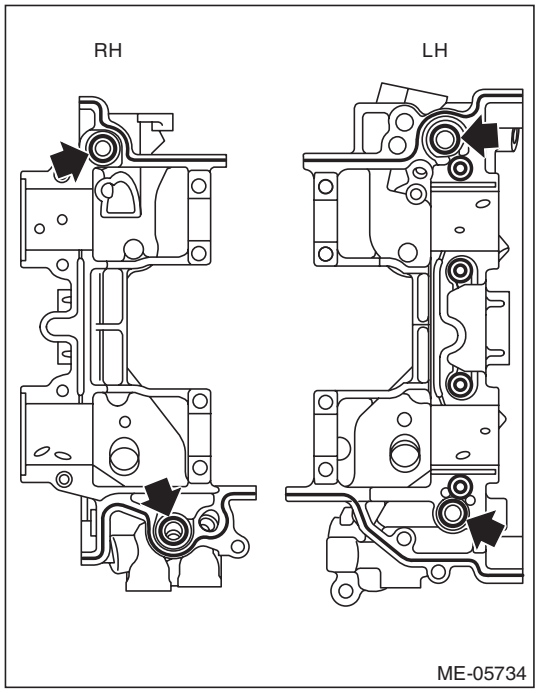

(3) Apply a thin coat of engine oil to the cap journal surface, and install the camshaft cap to the camshaft.

GETtheMANUALS.org

(4) Gradually tighten the camshaft cap in at least two stages in the numerical order shown in the figure, then tighten to specified torque.

Tightening torque:
(1) — (12): 16 N·m (1.6 kgf-m, 11.8 ft-lb)
(13) — (17): 9.75 N·m (1.0 kgf-m, 7.2 ft-lb)

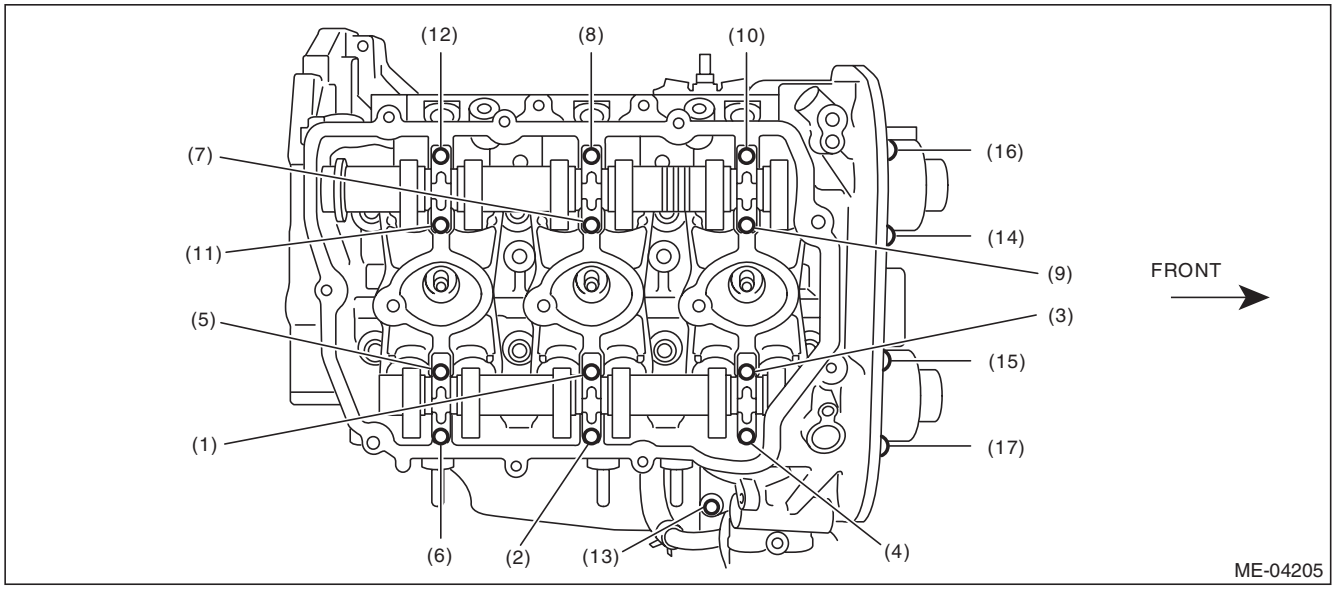

(5) After tightening the camshaft cap, ensure the camshaft rotates only slightly while holding it at base circle.

3) Install the rocker cover.
(1) Install the rocker cover gasket to the rocker cover.

NOTE:
Use a new rocker cover gasket.

(2) Apply liquid gasket sparingly to the mating surface of cylinder head and rocker cover as shown in the figure.

NOTE:
- Install within 5 min. after applying liquid gasket.
- Do not apply liquid gasket excessively. Applying excessively may cause excess gasket to come out and flow toward cam journal, resulting in engine seizure.

Liquid gasket:
THREE BOND 1217G (Part No. K0877Y0100) or equivalent

Liquid gasket applying diameter:
3.5±0.5 mm (0.138±0.020 in)

GETtheMANUALS.org

- LH side

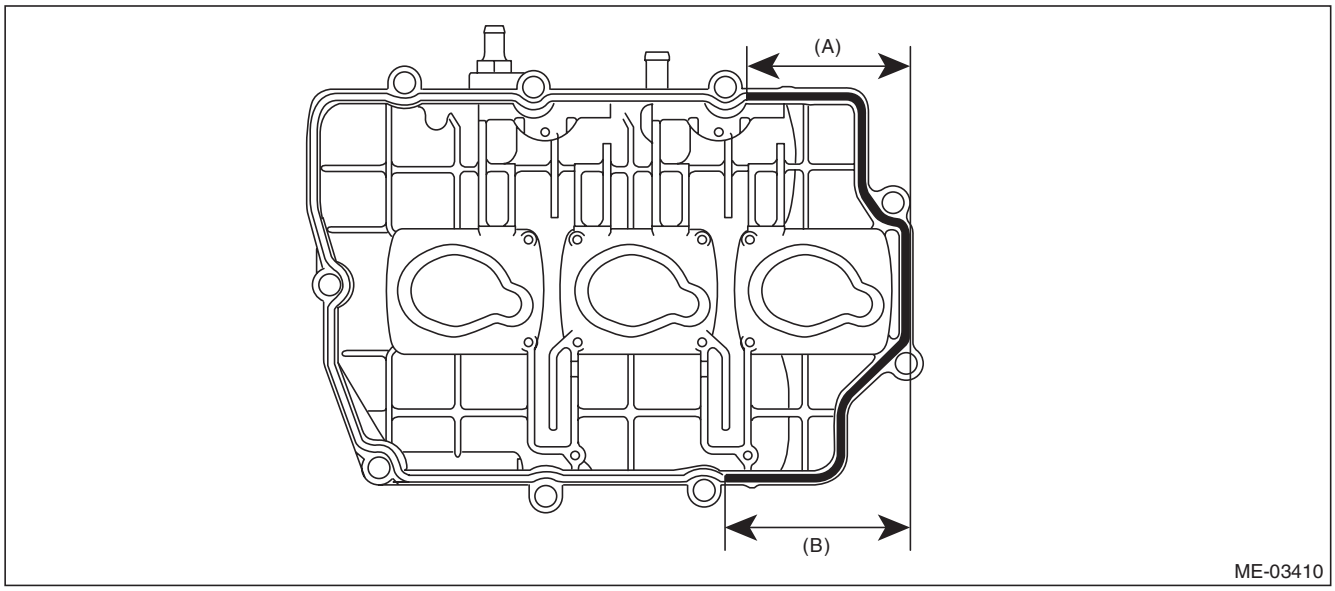

(A) 90 mm (3.543 in) or more (B) 105 mm (4.134 in) or more

- RH side

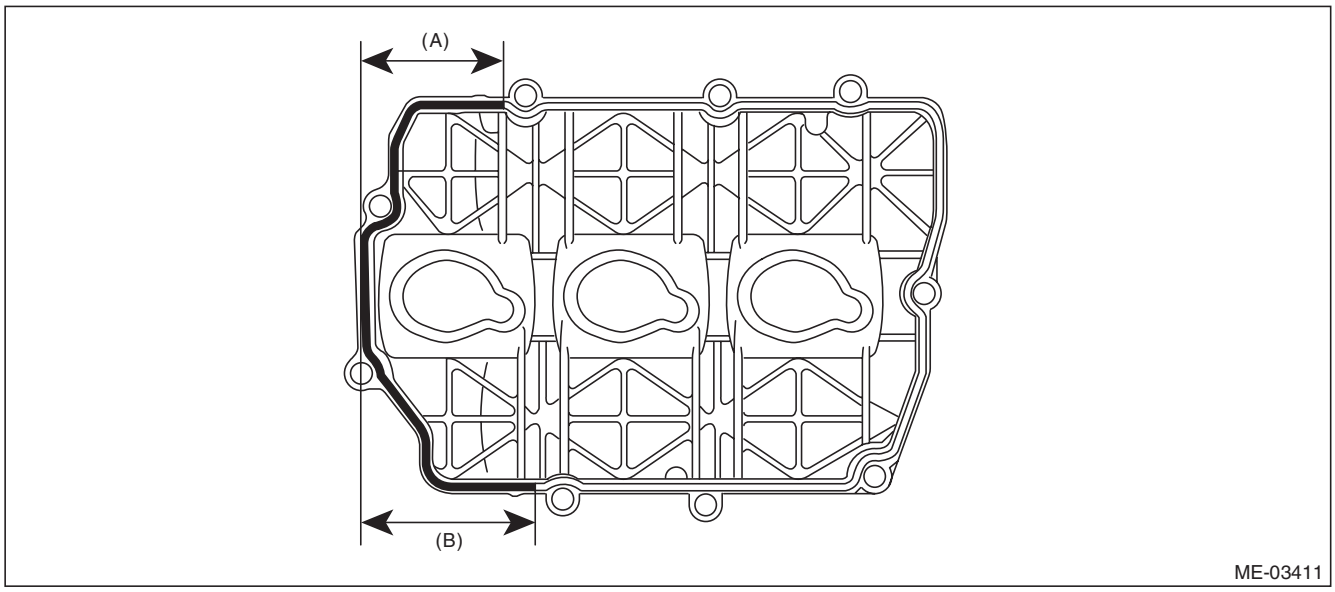

(A) 80 mm (3.150 in) or more (B) 100 mm (3.937 in) or more

GETtheMANUALS.org

(3) Tighten the rocker cover bolts in the numerical order as shown in the figure.

Tightening torque:
6.4 N·m (0.7 kgf-m, 4.7 ft-lb)

- LH side

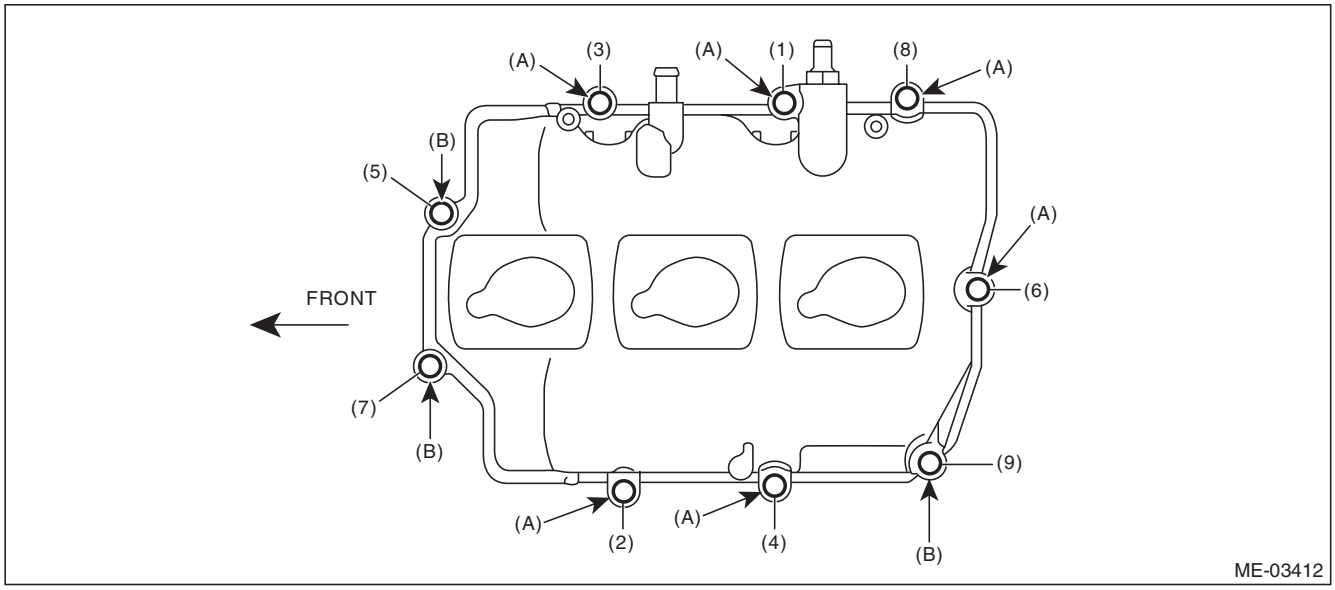

(A) M6 × 39.5 (B) M6 × 26.3

- RH side

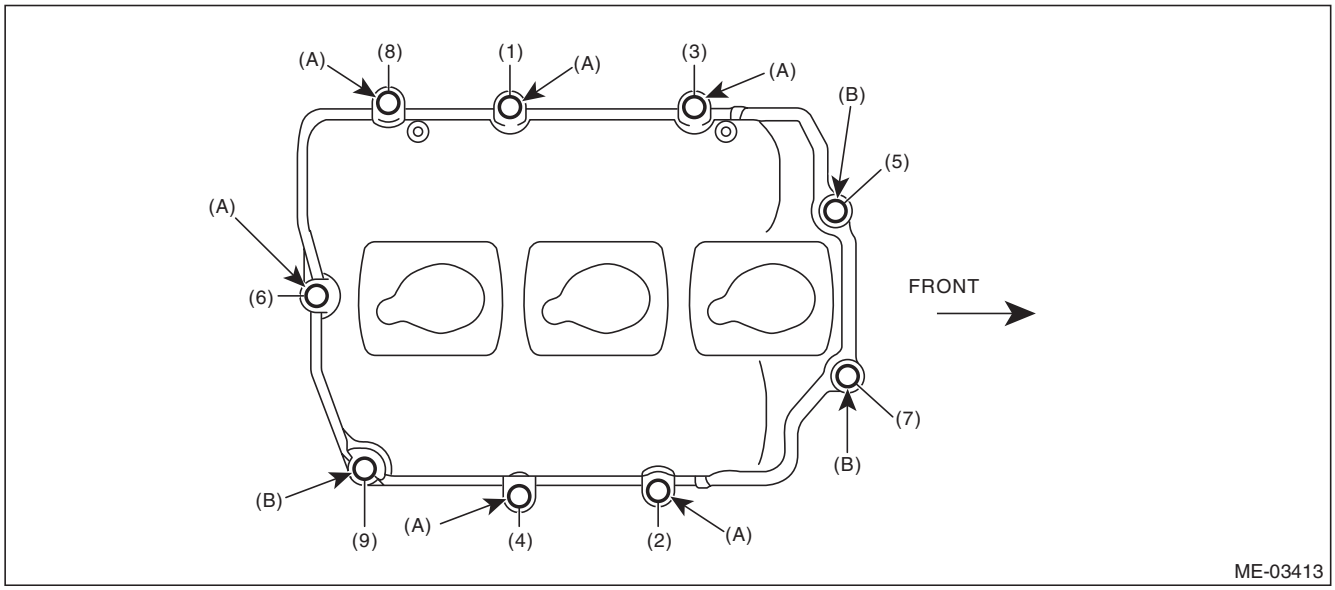

(A) M6 × 39.5 (B) M6 × 26.3

4) Install the crank sprocket. <Ref. to ME(H6DO)-83, INSTALLATION, Crank Sprocket.>
5) Install the cam sprocket. <Ref. to ME(H6DO)-82, INSTALLATION, Cam Sprocket.>
6) Install the timing chain assembly. <Ref. to ME(H6DO)-69, INSTALLATION, Timing Chain Assembly.>
7) Install the chain cover. <Ref. to ME(H6DO)-56, INSTALLATION, Chain Cover.>
8) Install the crank pulley. <Ref. to ME(H6DO)-52, INSTALLATION, Crank Pulley.>
9) Install the engine to the vehicle. <Ref. to ME(H6DO)-40, INSTALLATION, Engine Assembly.>

GETtheMANUALS.org

C: INSPECTION

1) Measure the bend, and repair or replace if necessary.

Camshaft bend limit:
0.020 mm (0.00079 in)

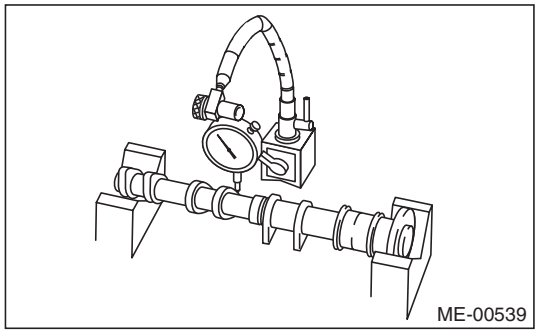

2) Check the journal for damage and wear. Replace if faulty.
3) Check the cutout portion used for camshaft sensor for damage. Replace if faulty.
4) Check the cam face condition; remove the minor faults by grinding with oil stone. Replace if there is uneven wear or others.
5) Measure the cam lobe height “H” and cam base circle diameter “A”. If it exceeds the standard or offset wear occurs, replace it.

Cam lobe height H:

Standard
Intake
45.90 — 46.00 mm (1.8071 — 1.8110 in)
Exhaust
44.65 — 44.75 mm (1.7579 — 1.7618 in)

Cam base circle diameter A:

Standard
Intake
36.00 mm (1.4173 in)
Exhaust
36.00 mm (1.4137 in)

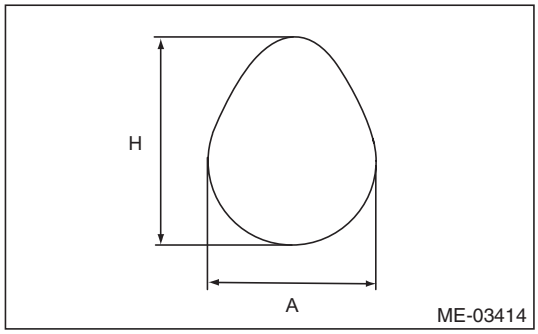

6) Measure the outside diameter of camshaft journal. If the journal diameter is not within specification, check the oil clearance.

	Camshaft journal	
	Front	Except for front
Standard mm (in)	37.946 — 37.963 (1.4939 — 1.4946)	25.946 — 25.963 (1.0215 — 1.0222)

7) Measure the oil clearance of camshaft journal.
(1) Clean the camshaft cap and cylinder head camshaft journal.
(2) Place the camshaft on cylinder head. (Without installing the valve lifter)
(3) Place a plastigauge across each camshaft journals.
(4) Gradually tighten the camshaft cap in at least two stages in the numerical order shown in the figure, then tighten to specified torque. Do not turn the camshaft.

GETtheMANUALS.org

Tightening torque:
(1) — (12): 16 N·m (1.6 kgf-m, 11.8 ft-lb)
(13) — (17): 9.75 N·m (1.0 kgf-m, 7.2 ft-lb)

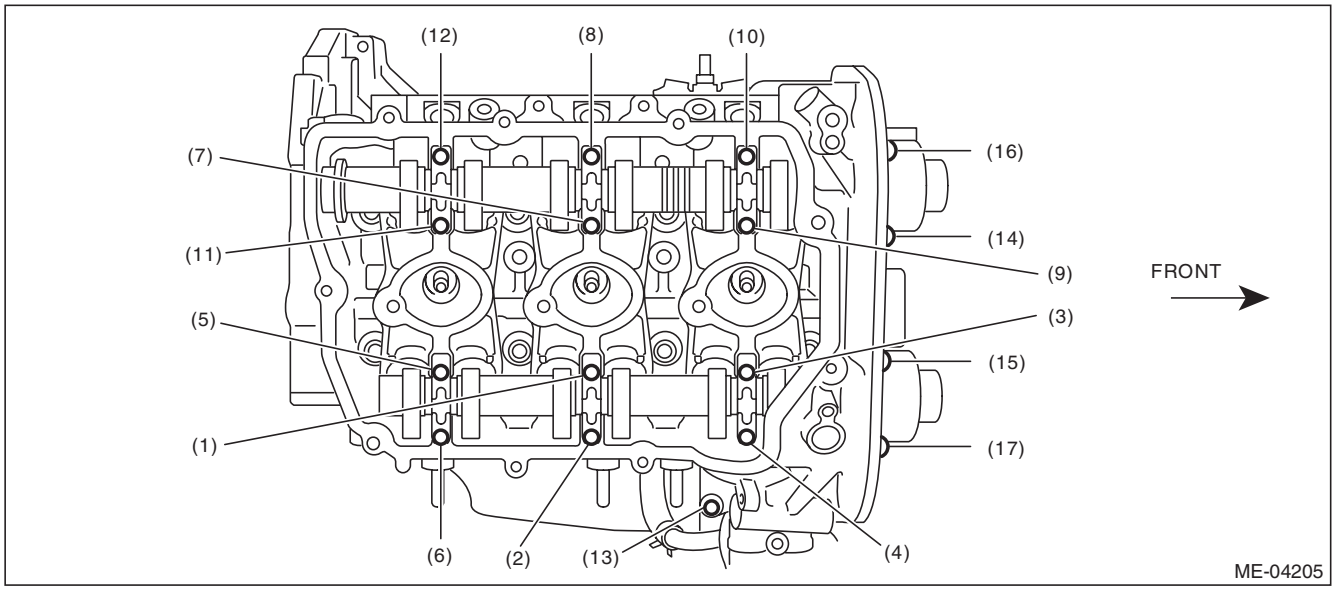

(5) Remove the camshaft cap.
(6) Measure the widest point of the plastigauge on each journal. If oil clearance exceeds the standard, replace the camshaft. If necessary, replace the camshaft caps and cylinder head as a set.

Camshaft oil clearance:
Standard
0.037 — 0.072 mm (0.0015 — 0.0028 in)

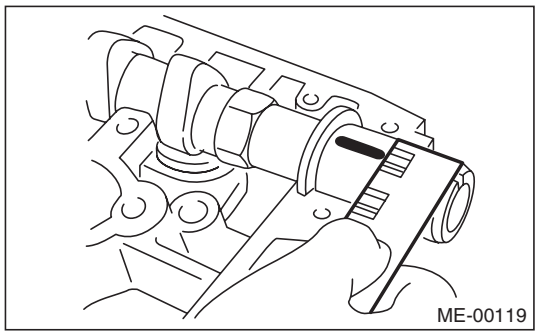

(7) Completely remove the plastigauge.
8) Measure the thrust clearance with setting the dial gauge at end surface of camshaft. If the thrust clearance is not within the standard or there is offset wear, replace the camshaft caps and cylinder head as a set. If necessary replace the camshaft.

Camshaft thrust clearance:

Standard
Intake
0.075 — 0.135 mm (0.0030 — 0.0053 in)
Exhaust
0.075 — 0.135 mm (0.0030 — 0.0053 in)

GETtheMANUALS.org

19.Cylinder Head

A: REMOVAL

1) Remove the engine from vehicle. <Ref. to ME(H6DO)-36, REMOVAL, Engine Assembly.>
2) Remove the crank pulley. <Ref. to ME(H6DO)-52, REMOVAL, Crank Pulley.>
3) Remove the chain cover. <Ref. to ME(H6DO)-53, REMOVAL, Chain Cover.>
4) Remove the timing chain assembly. <Ref. to ME(H6DO)-63, REMOVAL, Timing Chain Assembly.>
5) Remove the cam sprocket. <Ref. to ME(H6DO)-82, REMOVAL, Cam Sprocket.>
6) Remove the crank sprocket. <Ref. to ME(H6DO)-83, REMOVAL, Crank Sprocket.>
7) Remove the camshaft. <Ref. to ME(H6DO)-84, REMOVAL, Camshaft.>
8) Remove the seal bolt shown in the figure.

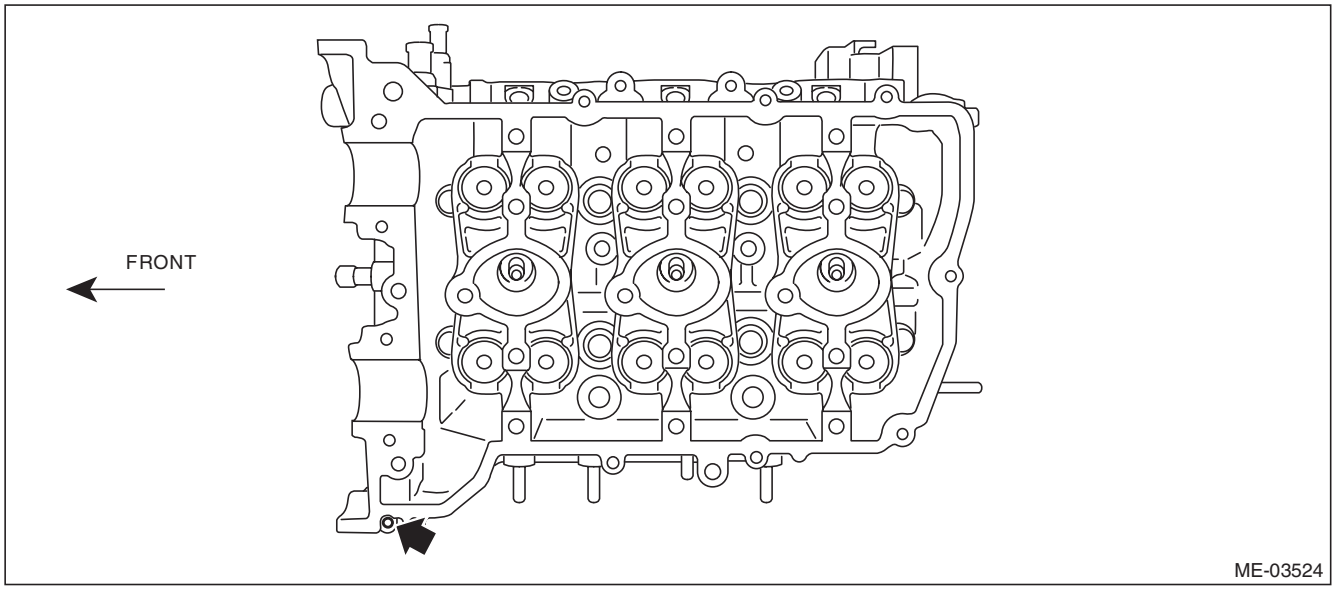

9) Remove the cylinder head bolts in the numerical order as shown in the figure.

NOTE:
Leave bolts (2) and (4) engaged by three or four threads to prevent the cylinder head from falling.

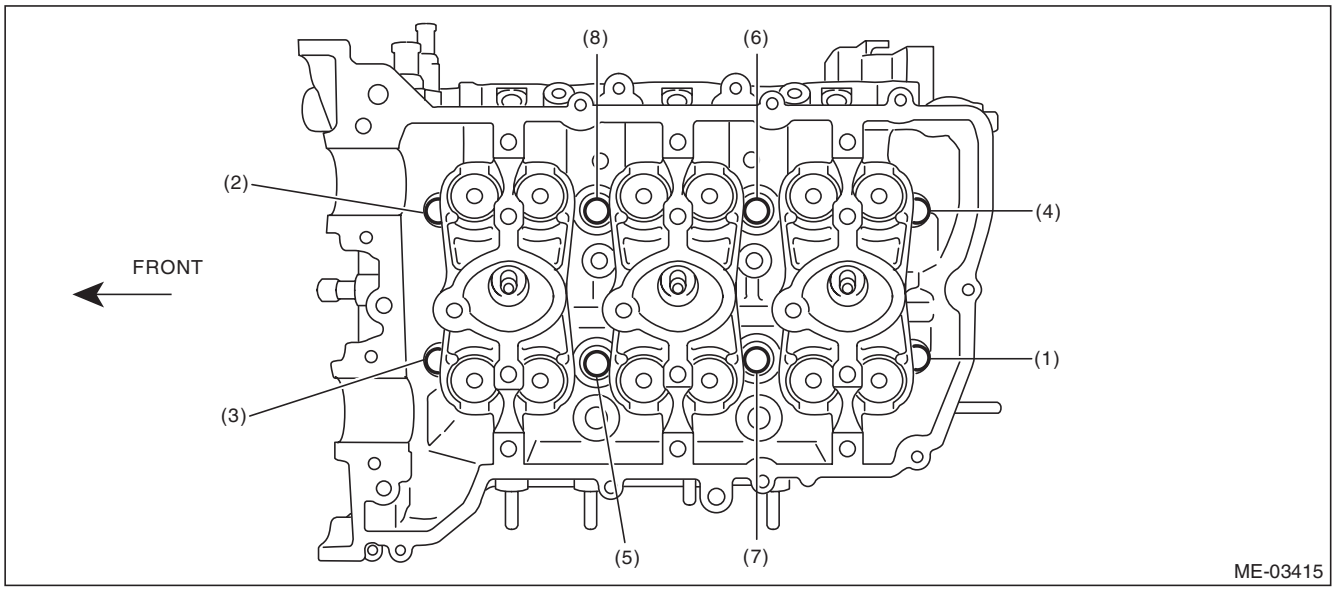

10) While tapping the cylinder head with a plastic hammer, separate it from cylinder block.
11) Remove the bolts (2) and (4) to remove cylinder head.
12) Remove the cylinder head gasket.

GETtheMANUALS.org

CAUTION:
Be careful not to scratch the mating surface of cylinder head and cylinder block.
13) Similarly, remove the cylinder head (RH).

B: INSTALLATION

1) Apply liquid gasket to the mating surface of cylinder block shown in the figure.

NOTE:
- Install within 5 min. after applying liquid gasket.
- Do not apply liquid gasket excessively. If too much is applied, remove any liquid gasket that is squeezed out.

Liquid gasket:
THREE BOND 1217G (Part No. K0877Y0100) or equivalent

Liquid gasket applying diameter:
3.5±1.0 mm (0.138±0.039 in)
- LH side

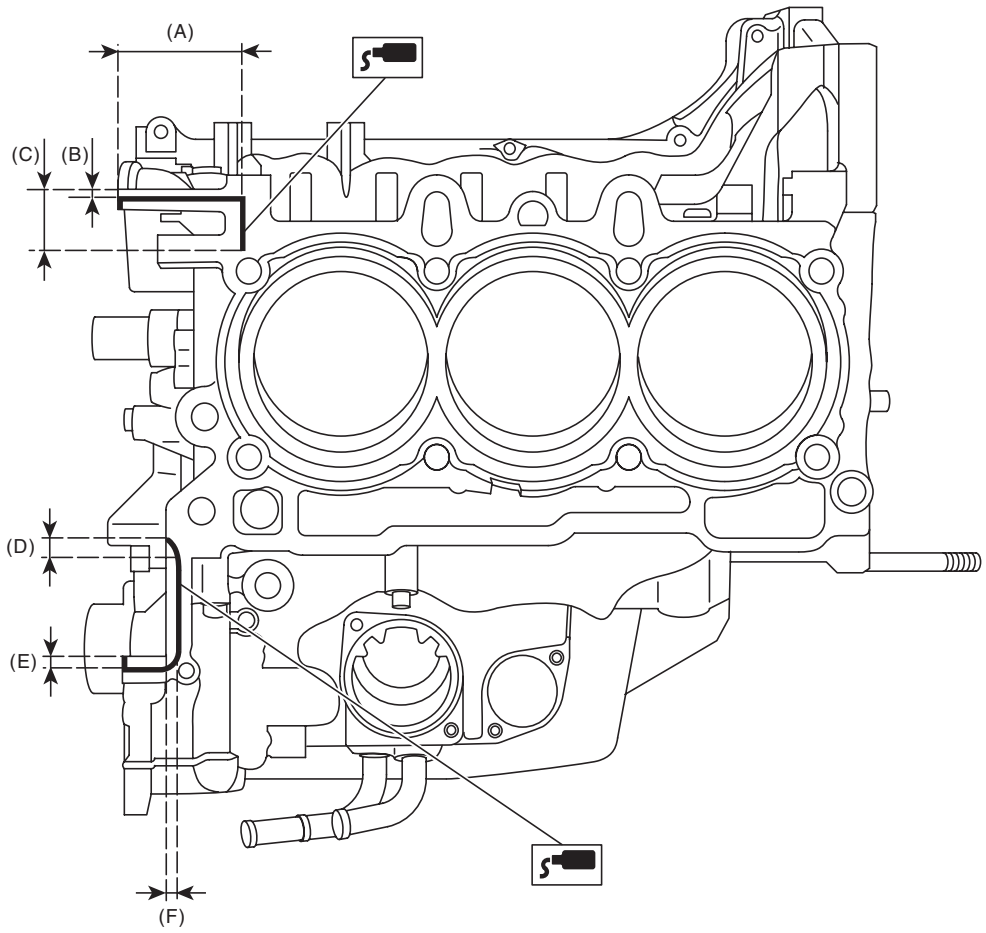

(A)	59 mm (2.323 in)	(C)	20 mm (0.787 in)	(E)	4 mm (0.157 in)
(B)	2 mm (0.079 in)	(D)	7 mm (0.276 in)	(F)	4 mm (0.157 in)

GETtheMANUALS.org

- RH side

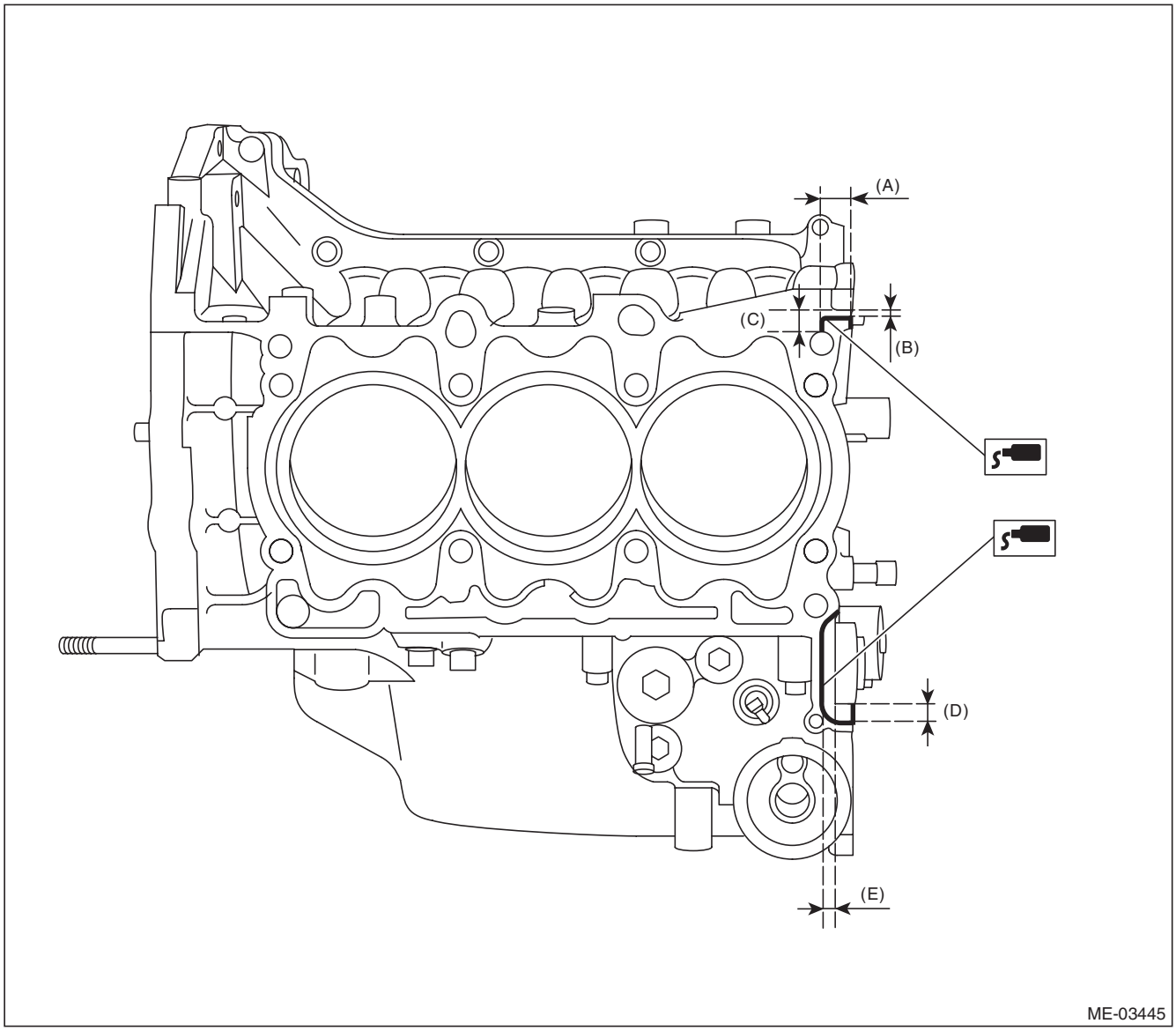

(A)	17 mm (0.669 in)	(C)	9 mm (0.354 in)	(E)	4 mm (0.157 in)
(B)	2 mm (0.079 in)	(D)	4 mm (0.157 in)		

2) Install the cylinder head gaskets LH and RH onto the cylinder block.

NOTE:
Use a new cylinder head gasket.

3) Apply liquid gasket to the mating surface of cylinder head gasket shown in the figure.

NOTE:
- Install within 5 min. after applying liquid gasket.
- Do not apply liquid gasket excessively. If too much is applied, remove any liquid gasket that is squeezed out.

Liquid gasket:
THREE BOND 1217G (Part No. K0877Y0100) or equivalent

Liquid gasket applying diameter:
3.5±1.0 mm (0.138±0.039 in)

GETtheMANUALS.org

- LH side

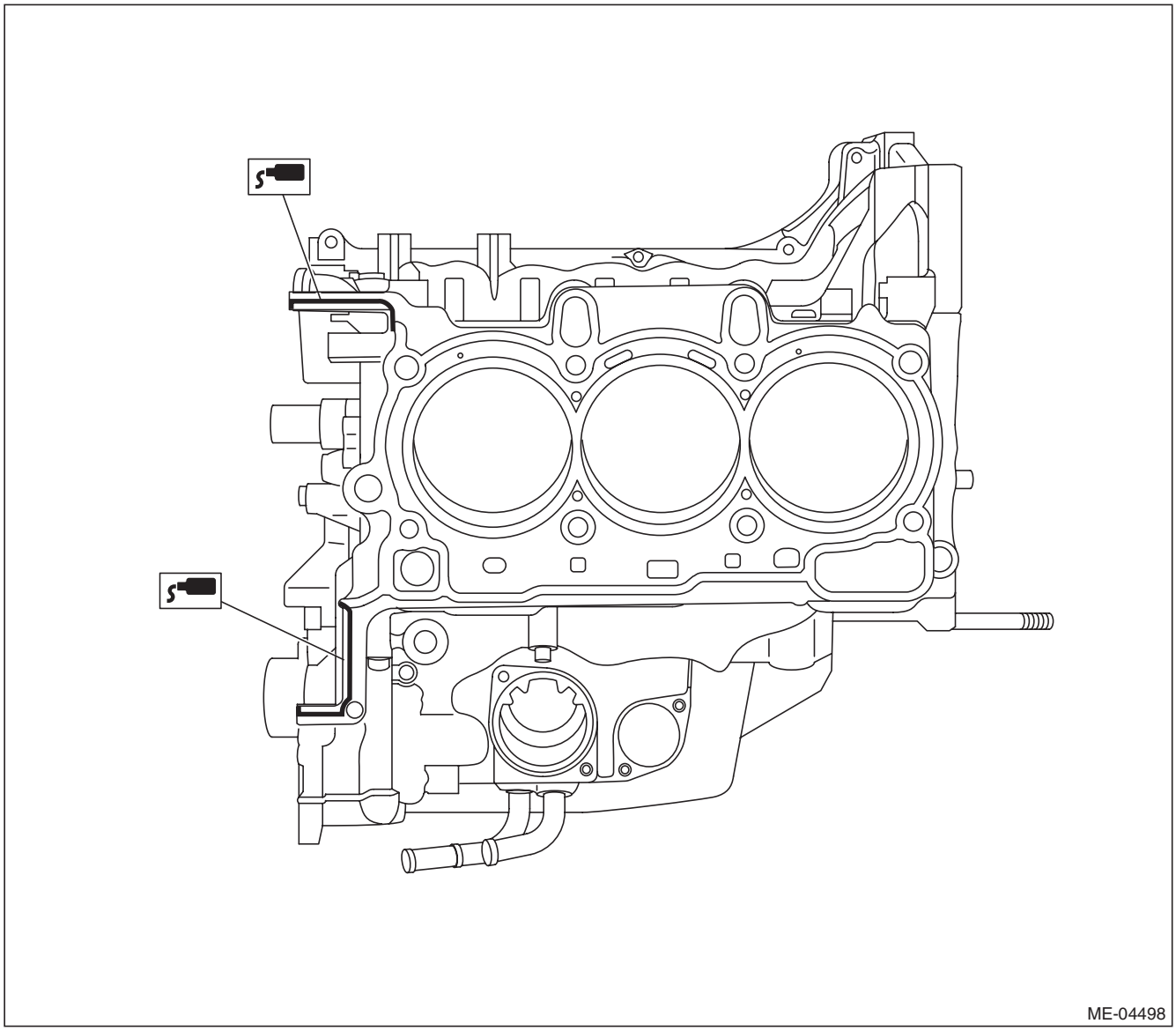

GETtheMANUALS.org

- RH side

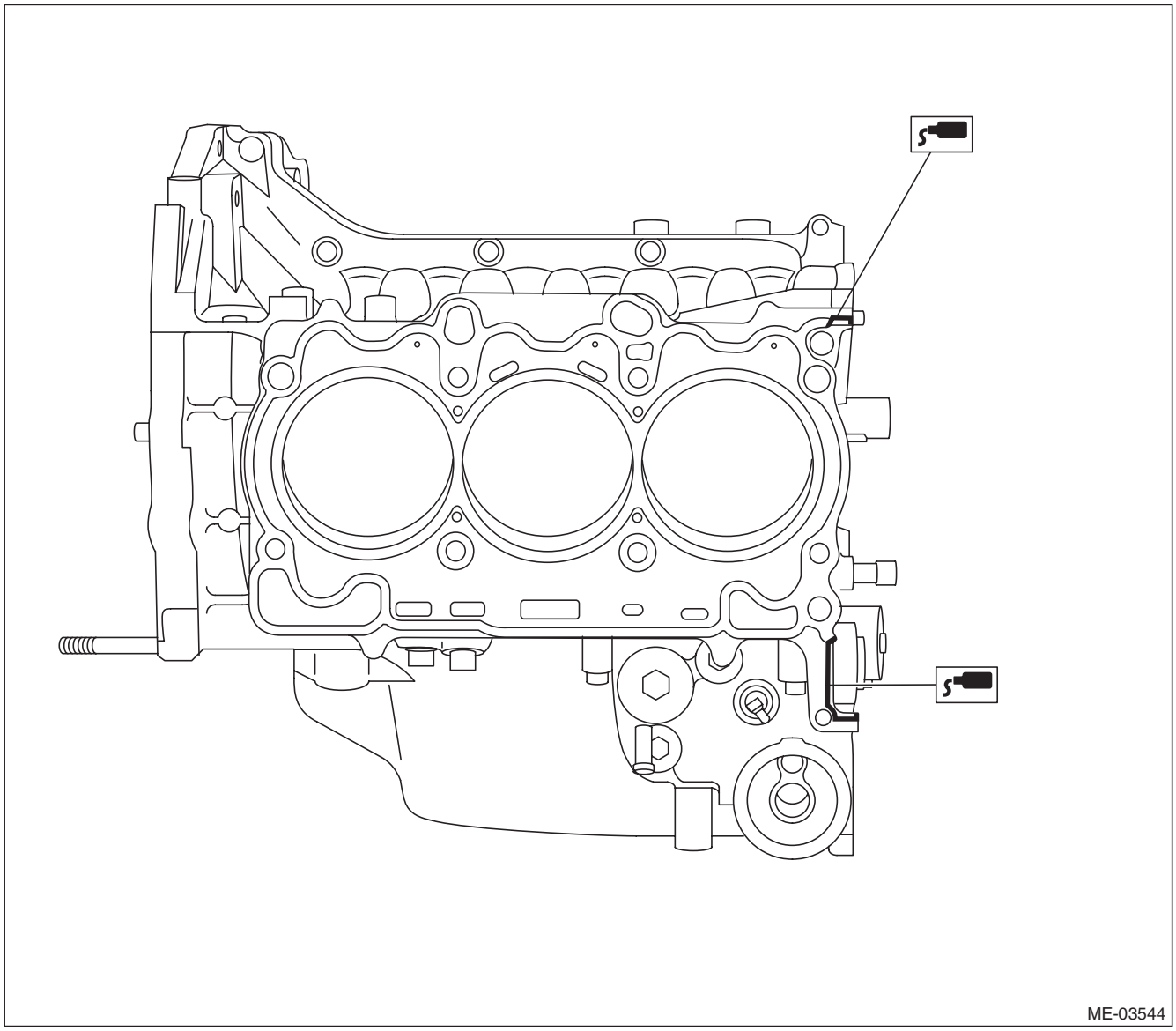

4) Attach the cylinder head to the cylinder block.

CAUTION:
Be careful not to scratch the mating surface of cylinder head and cylinder block.

5) Tighten the cylinder head bolts.
   (1) Apply a thin coat of engine oil to washers and cylinder head bolt threads.
   (2) Mount the cylinder head onto the cylinder block, then tighten the bolts with a torque of 20 N·m (2.0 kgf-m, 14.8 ft-lb) in the order indicated in the figure.
   (3) Tighten the bolts with a torque of 50 N·m (5.1 kgf-m, 36.9 ft-lb) in the order indicated in the figure.
   (4) Loosen all the bolts by 180° in the reverse order of installing, and loosen them further by 180°.
   (5) Tighten the bolts with torque of 20 N·m (2.0 kgf-m, 14.8 ft-lb) in numerical sequence as shown in the figure.
   (6) Tighten the bolts (1) — (4) in the order indicated with a torque of 48 N·m (4.9 kgf-m, 35.4 ft-lb).
   (7) Tighten the bolts (5) — (8) in the order indicated with a torque of 44 N·m (4.5 kgf-m, 32.5 ft-lb).
   (8) Tighten all bolts 90° in the numerical order as shown in the figure.

GETtheMANUALS.org

(9) Tighten the bolt (1) — (4) by 45° in the numerical order.

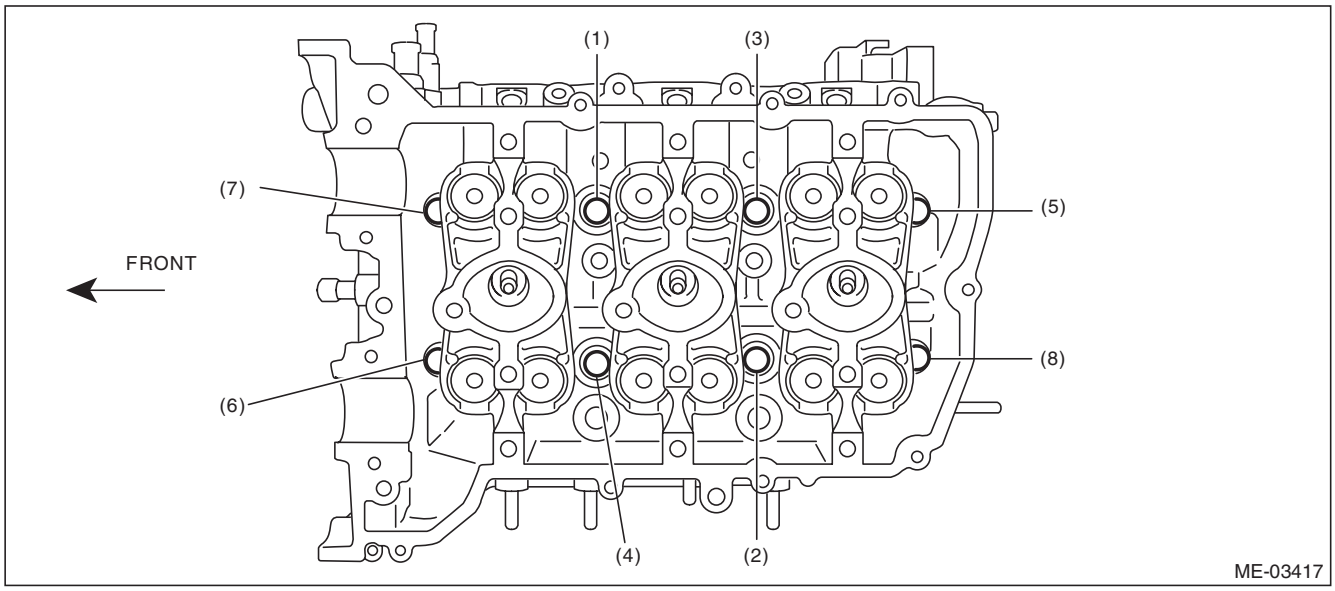

6) Install the seal bolt shown in the figure.

NOTE:
Before installing seal bolts, apply a sealing material to bolt threads.

Seal material:
THREE BOND 1324 (Part No. 004403042) or equivalent

Tightening torque:
6.4 N·m (0.7 kgf-m, 4.7 ft-lb)

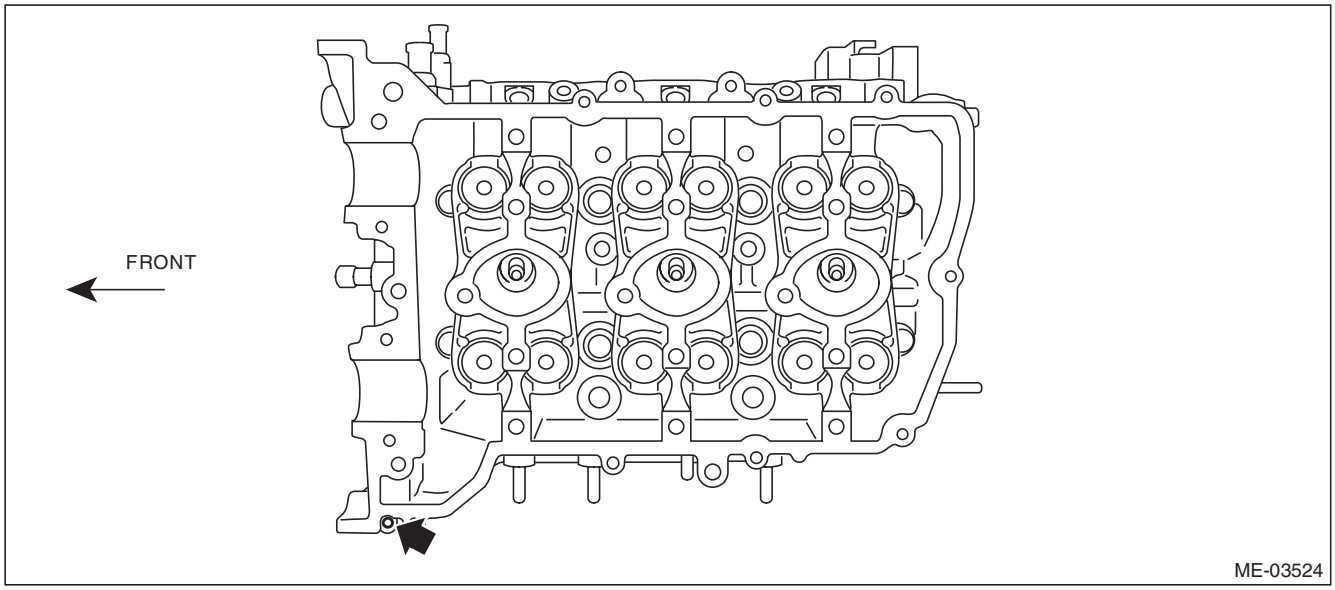

7) Install the camshaft. <Ref. to ME(H6DO)-85, INSTALLATION, Camshaft.>
8) Install the crank sprocket. <Ref. to ME(H6DO)-83, INSTALLATION, Crank Sprocket.>
9) Install the cam sprocket. <Ref. to ME(H6DO)-82, INSTALLATION, Cam Sprocket.>
10) Install the timing chain assembly. <Ref. to ME(H6DO)-69, INSTALLATION, Timing Chain Assembly.>
11) Install the chain cover. <Ref. to ME(H6DO)-56, INSTALLATION, Chain Cover.>
12) Install the crank pulley. <Ref. to ME(H6DO)-52, INSTALLATION, Crank Pulley.>
13) Install the engine to the vehicle. <Ref. to ME(H6DO)-40, INSTALLATION, Engine Assembly.>

GETtheMANUALS.org

C: DISASSEMBLY

1) Set the cylinder head on ST.
ST 18250AA010 CYLINDER HEAD TABLE
2) Remove the valve lifter.
3) Compress the valve spring using ST, and remove the valve spring retainer key, each valve and valve spring.
ST 499718000 VALVE SPRING REMOVER

NOTE:
- Mark each valve to prevent confusion.
- Pay careful attention not to damage the lips of intake valve oil seals and exhaust valve oil seals.
- Keep all the removed parts in order for re-installing in their original positions.
- For removal and installation procedures of the valve guide, intake valve oil seal and exhaust valve oil seal, refer to “INSPECTION”. <Ref. to ME(H6DO)-101, VALVE GUIDE, INSPECTION, Cylinder Head.> <Ref. to ME(H6DO)-103, INTAKE AND EXHAUST VALVE OIL SEAL, INSPECTION, Cylinder Head.>

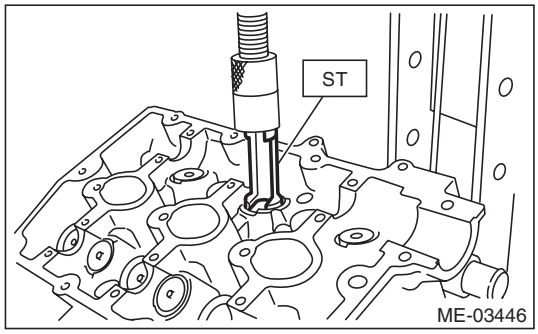

4) Remove the plug and filter from the front camshaft cap as necessary.

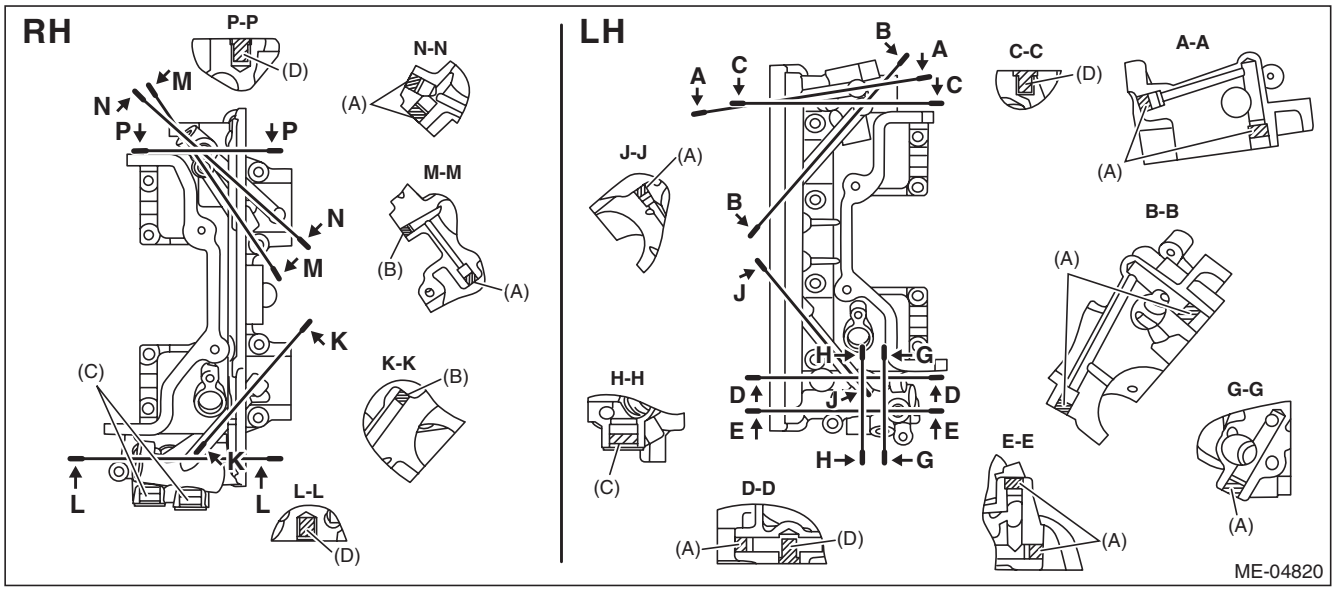

(A) Plug (PT 1/8)
(B) Plug (PT 1/16)
(C) Plug (M16 × 1.5)
(D) Filter

GETtheMANUALS.org

D: ASSEMBLY

1) Install the valve spring and valve.
   (1) Set the cylinder head on ST.

ST 18250AA010 CYLINDER HEAD TABLE

   (2) Coat the stem of each valve with engine oil and insert the valve into valve guide.

NOTE:
When inserting the valve into valve guide, use special care not to damage the oil seal lip.

   (3) Install the valve spring and retainer.

NOTE:
- Be sure to install the valve spring with its close-coiled end facing the seat on cylinder head.
- Install the valve spring with the painted side facing to retainer.

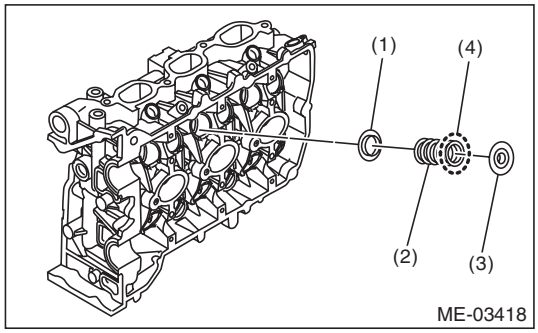

(1) Seat
(2) Valve spring
(3) Retainer
(4) Painted face

   (4) Set the ST on valve spring.

ST 499718000 VALVE SPRING REMOVER

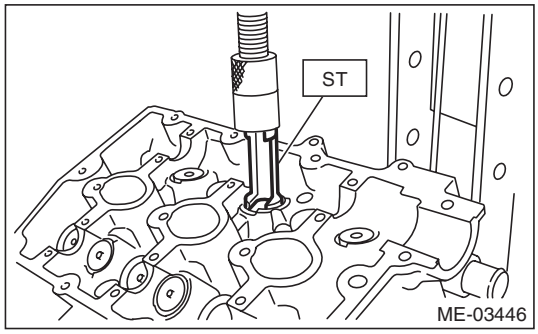

   (5) Compress the valve spring and fit the valve spring retainer key.
   (6) After installing, tap the valve spring retainers lightly with a wooden hammer for better seating.

2) Apply oil to the surface of valve lifter.
3) Install the valve lifter.

GETtheMANUALS.org

4) Install the plug and filter to the front camshaft cap as necessary.

Tightening torque:
T1: 9 N·m (0.9 kgf-m, 6.6 ft-lb)
T2: 17 N·m (1.7 kgf-m, 12.5 ft-lb)
T3: 23 N·m (2.3 kgf-m, 17.0 ft-lb)

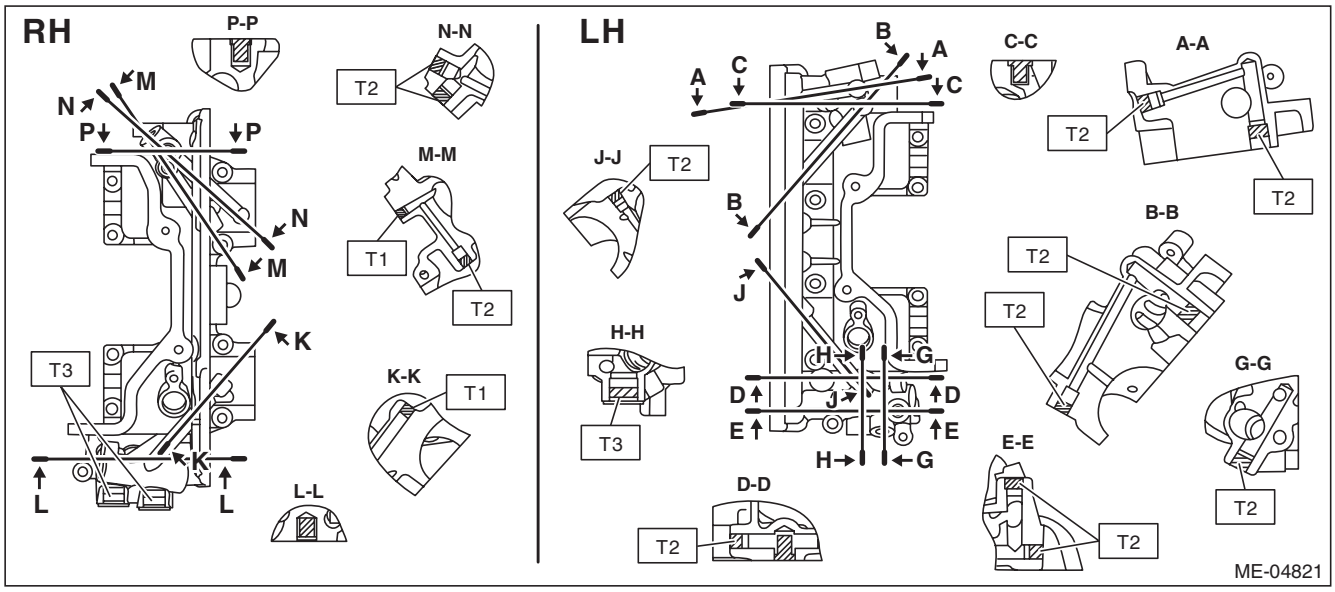

E: INSPECTION

1. CYLINDER HEAD

1) Make sure that there are no cracks or other damages. Perform visual check, and use liquid penetrant tester on the important sections. Check that there are no marks of gas leaking or water leaking on gasket installing surface.
2) Set the cylinder head on ST.
ST 18250AA010 CYLINDER HEAD TABLE
3) Check for warpage at mating surface between the cylinder block and cylinder head using a straight edge (A) and thickness gauge (B). If the warpage exceeds limit, replace the cylinder head.

Warping limit:
0.020 mm (0.0008 in)

Standard height of cylinder head:
124±0.05 mm (4.88±0.0020 in)

NOTE:
Uneven torque for the cylinder head bolts can cause warpage. When reinstalling, pay special attention to the torque so as to tighten evenly.

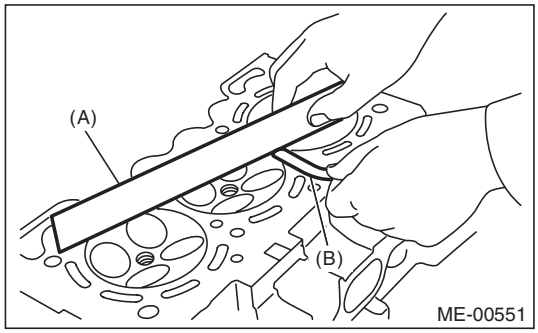

GETtheMANUALS.org

2. VALVE SEAT

Inspect the intake and exhaust valve seats, and correct the contact surfaces with a valve seat cutter if they are defective or when valve guides are replaced.

Contacting width of valve seat W:

Standard
Intake
1.0 mm (0.039 in)
Exhaust
1.5 mm (0.059 in)

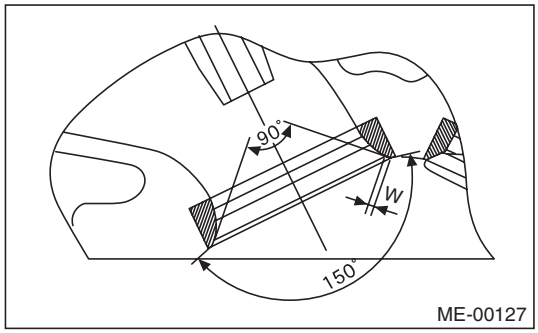

3. VALVE GUIDE

1) Check the clearance between valve guide and valve stem. The clearance can be checked by measuring respectively the outer diameter of valve stem with a micrometer and the inner diameter of valve guide with a caliper gauge.

Clearance between the valve guide and valve stem:

Standard
Intake
0.030 — 0.057 mm (0.0012 — 0.0022 in)
Exhaust
0.040 — 0.067 mm (0.0016 — 0.0026 in)

2) If the clearance between valve guide and valve stem exceeds the standard, replace the valve guide or valve itself, whichever shows the greater amount of wear or damage. See the following procedure for valve guide replacement.

Valve guide inner diameter:
5.500 — 5.512 mm (0.2165 — 0.2170 in)

Valve stem outer diameters:
Intake
5.455 — 5.470 mm (0.2148 — 0.2154 in)
Exhaust
5.445 — 5.460 mm (0.2144 — 0.2150 in)

(1) Place the cylinder head on ST1 with the combustion chamber upward so that valve guides fit the holes in ST1.

(2) Insert the ST2 into valve guide and press it down to remove the valve guide.

ST1	18250AA010	CYLINDER HEAD TABLE
ST2	499765700	VALVE GUIDE REMOVER

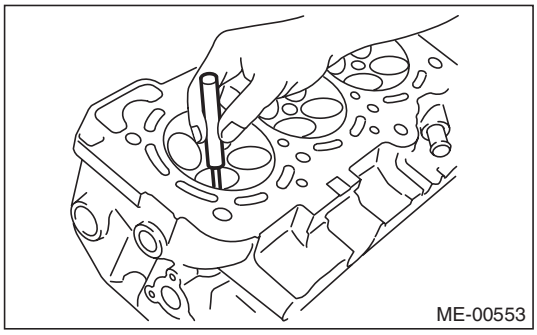

(3) Turn the cylinder head upside down and place the ST as shown in the figure.

ST	18251AA050	VALVE GUIDE ADJUSTER (INTAKE SIDE)
ST	18251AA060	VALVE GUIDE ADJUSTER (EXHAUST SIDE)

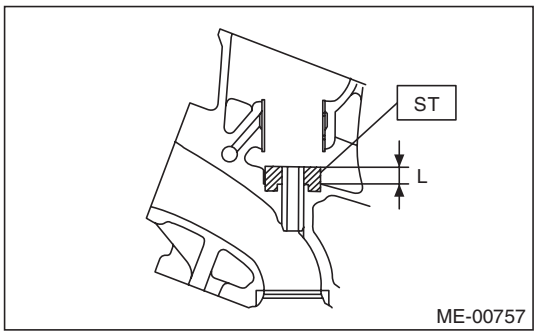

(4) Before installing a new valve guide, make sure that neither scratches nor damages exist on the inner surface of valve guide holes in cylinder head.

(5) Put a new valve guide, coated with sufficient oil, in the cylinder head, and insert the ST1 into valve guide. Press in until the valve guide upper end is flush with the upper surface of ST2.

ST1	499765700	VALVE GUIDE REMOVER
ST2	18251AA050	VALVE GUIDE ADJUSTER (INTAKE SIDE)
ST2	18251AA060	VALVE GUIDE ADJUSTER (EXHAUST SIDE)

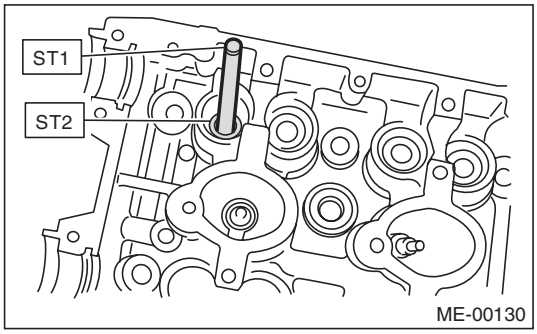

GETtheMANUALS.org

(6) Check the valve guide protrusion amount "L".

Valve guide protrusion amount L:
Intake
8.6 — 9.0 mm (0.3386 — 0.3543 in)
Exhaust
10.7 — 11.1 mm (0.4213 — 0.4370 in)

(7) Ream the inside of valve guide using ST. Put the ST in valve guide, and rotate the ST slowly clockwise while pushing it lightly. Bring the ST back while rotating it clockwise.

ST 499765900 VALVE GUIDE REAMER

NOTE:
- Apply engine oil to the ST when reaming.
- If the inner surface of valve guide is damaged, the edge of ST should be slightly ground with oil stone.
- If the inner surface of valve guide becomes lustrous and the ST does not chip, use a new ST or remedy the ST.

(8) After reaming, clean the valve guide to remove chips.

(9) Recheck the contact condition between valve and valve seat after replacing the valve guide.

4. INTAKE AND EXHAUST VALVE

1) Check the flange and stem of the valve, and replace the valve with new one if damaged, worn, or deformed, "H" exceeds the standard, or if there is uneven wear.

Head edge thickness H:

Standard
Intake (A)
1.0 mm (0.039 in)
Exhaust (B)
1.2 mm (0.047 in)

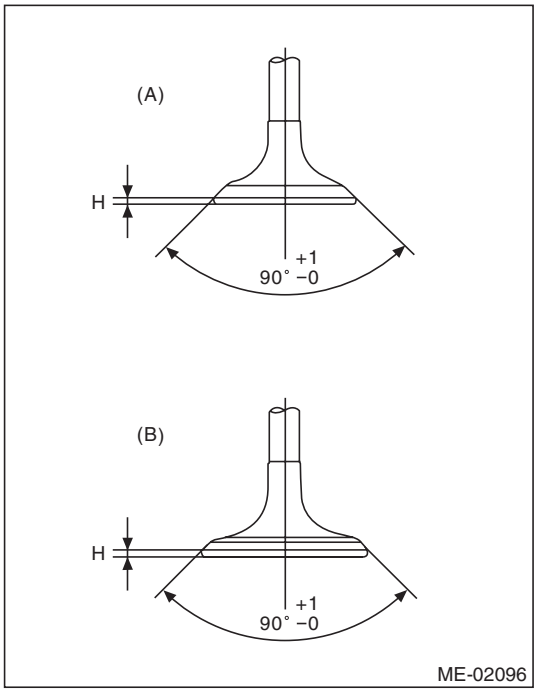

2) Put a small amount of grinding compound on the valve seat surface, and lap the valve and valve seat surface. Install a new valve oil seal after lapping.

NOTE:
It is possible to differentiate between the intake valve and the exhaust valve by their overall length.

Valve overall length:
Intake
103.5 mm (4.075 in)
Exhaust
103.2 mm (4.063 in)

GETtheMANUALS.org

5. VALVE SPRING

1) Check the valve springs for damage, free length, and tension. Replace the valve spring if it is not within the standard value presented in the table.
2) To measure the squareness of the valve spring, stand the valve spring on a surface plate and measure its deflection at the top of the spring using a try square.

Free length	mm (in)	49.06 (1.9315)
Tension/spring height N (kgf, lb)/mm (in)	Set	182 — 210 (18.6 — 21.4, 40.9 — 47.2) /31.0 (1.220 in)
	Lift	316 — 350 (32.2 — 35.7, 71.0 — 78.7) /21.0 (0.827 in)
Squareness		2.5°, 2.1 mm (0.083 in) or less

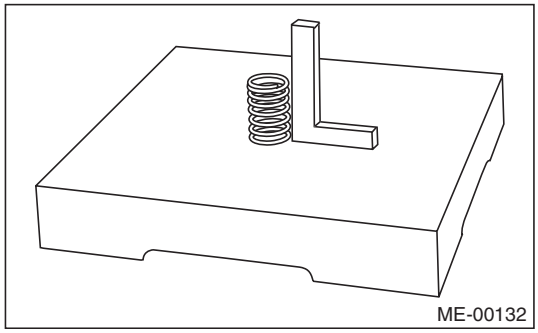
ME-00132

6. INTAKE AND EXHAUST VALVE OIL SEAL

1) For the following, replace the oil seal with a new part.
- When the lip is damaged.
- When the spring is out of the specified position.
- When readjusting the surfaces of valve and valve seat.
- When replacing the valve guide.

2) Set the cylinder head on ST1.
3) Using the ST2, press in the oil seal.

ST1 18250AA010 CYLINDER HEAD TABLE
ST2 18261AA010 VALVE OIL SEAL GUIDE

NOTE:
- Apply engine oil to oil seal before press-fitting.
- When press-fitting the oil seal, do not use a hammer to strike in.

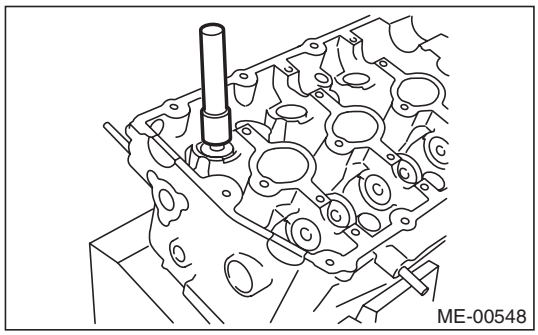
ME-00548

7. VALVE LIFTER

1) Check the valve lifter visually.
2) Measure the outer diameter of valve lifter.

Outer diameter of valve lifter:
32.959 — 32.975 mm (1.2976 — 1.2982 in)

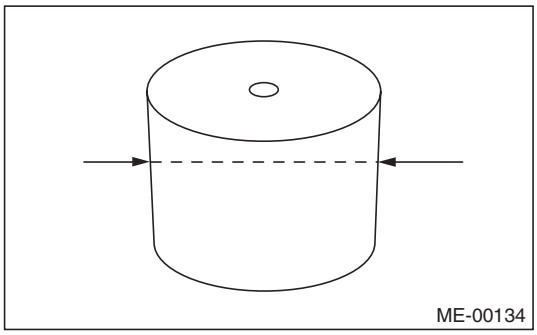
ME-00134

3) Measure the inner diameter of valve lifter mating surface on cylinder head.

Inner diameter of valve lifter mating surface:
32.994 — 33.016 mm (1.2990 — 1.2998 in)

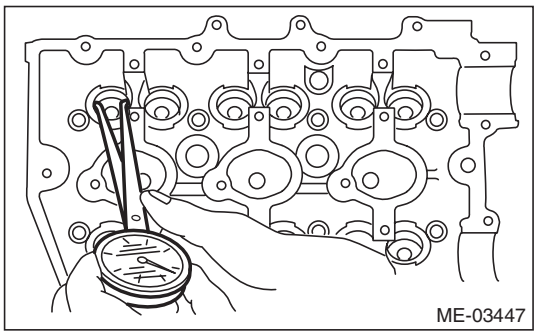
ME-03447

4) Check the clearance between valve lifter and valve lifter mating surface. The clearance can be checked by measuring the outer diameter of valve lifter and the inner diameter of valve lifter. If it exceeds the standard or offset wear occurs, replace the cylinder head.

Valve lifter and valve lifter mating surface clearance:
Standard
0.019 — 0.057 mm (0.0007 — 0.0022 in)

GETtheMANUALS.org

20. Cylinder Block

A: REMOVAL

NOTE:
Before conducting this procedure, drain the engine oil completely.

1) Remove the engine from vehicle. <Ref. to ME(H6DO)-36, REMOVAL, Engine Assembly.>
2) Remove the crank pulley. <Ref. to ME(H6DO)-52, REMOVAL, Crank Pulley.>
3) Remove the chain cover. <Ref. to ME(H6DO)-53, REMOVAL, Chain Cover.>
4) Remove the timing chain assembly. <Ref. to ME(H6DO)-63, REMOVAL, Timing Chain Assembly.>
5) Remove the cam sprocket. <Ref. to ME(H6DO)-82, REMOVAL, Cam Sprocket.>
6) Remove the crank sprocket. <Ref. to ME(H6DO)-83, REMOVAL, Crank Sprocket.>
7) Remove the camshaft. <Ref. to ME(H6DO)-84, REMOVAL, Camshaft.>
8) Remove the cylinder head. <Ref. to ME(H6DO)-92, REMOVAL, Cylinder Head.>
9) Remove the drive plate. <Ref. to 5AT-64, REMOVAL, Drive Plate.>
10) Remove the crankshaft position sensor.

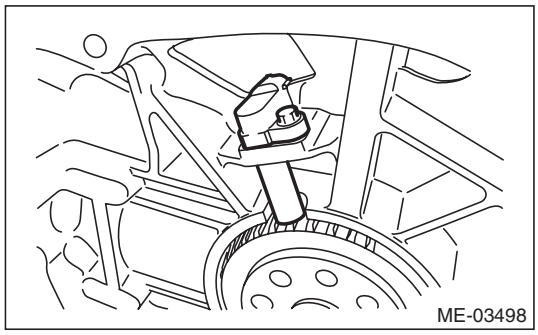

11) Remove the crankshaft position sensor plate.

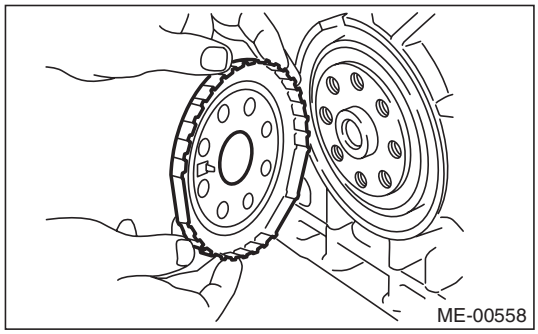

12) Rotate the engine to set oil pan upper.
13) Remove the bolts which secure oil pan lower to oil pan upper.

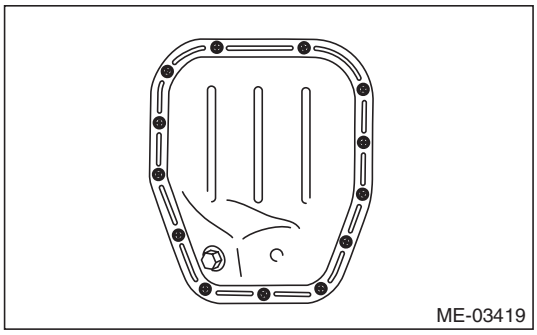

14) Insert an oil pan cutter blade into the gap between oil pan upper and oil pan lower, and remove the oil pan lower.

CAUTION:
Do not use a screwdriver or similar tools in place of oil pan cutter.

15) Remove the oil cooler connector and remove the oil cooler.

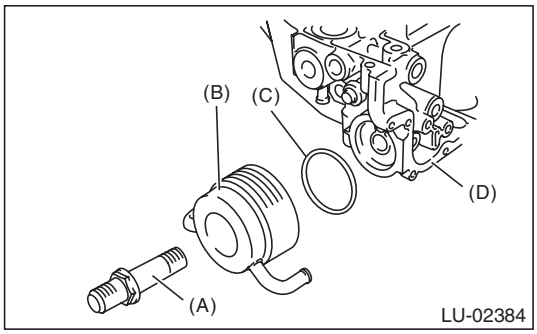

(A) Oil cooler connector
(B) Oil cooler
(C) O-ring
(D) Oil pan upper

16) Remove the oil pump. <Ref. to LU(H6DO)-12, REMOVAL, Oil Pump.>
17) Remove the oil level switch. <Ref. to LU(H6DO)-17, REMOVAL, Oil Level Switch.>

GETtheMANUALS.org

18) Remove the thermostat cover, and then remove the thermostat.

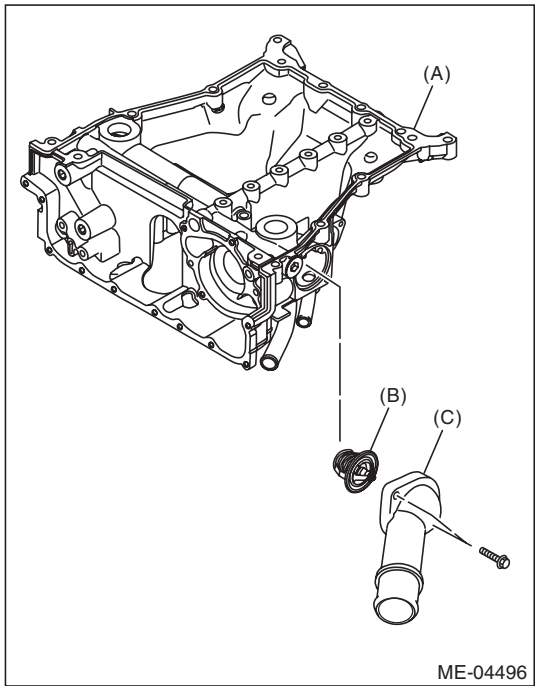

(A) Oil pan upper
(B) Thermostat
(C) Thermostat cover

19) Remove the oil pan upper.

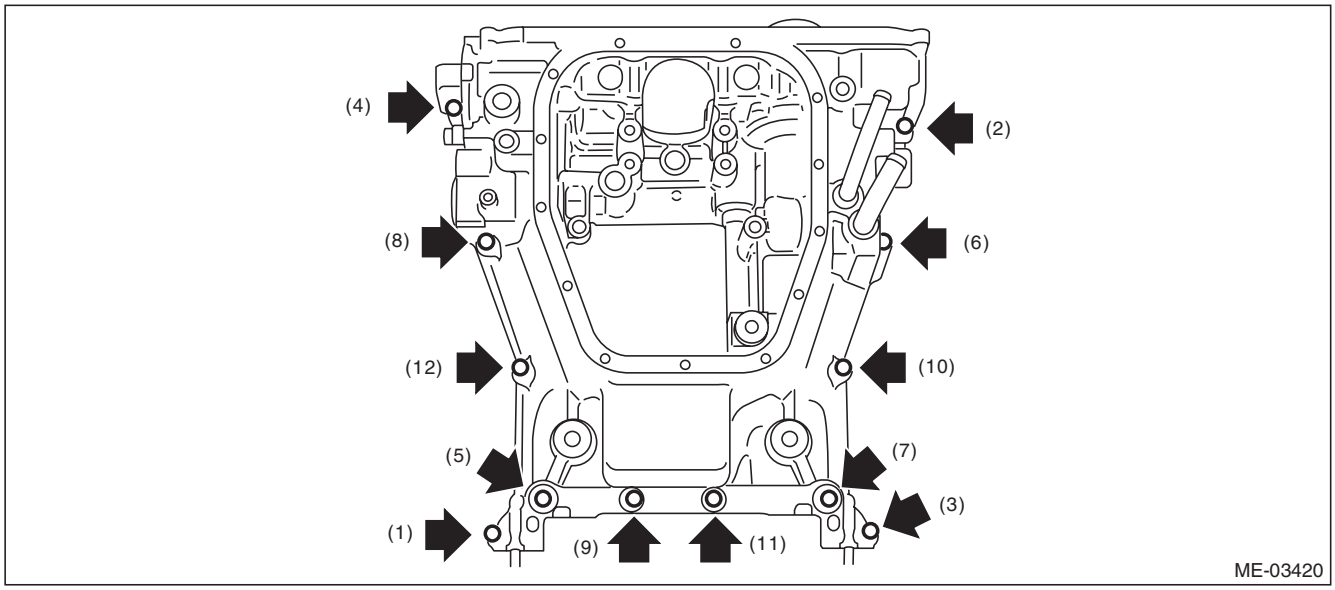

GETtheMANUALS.org

20) Face the front of the engine up, standing the engine on one end.

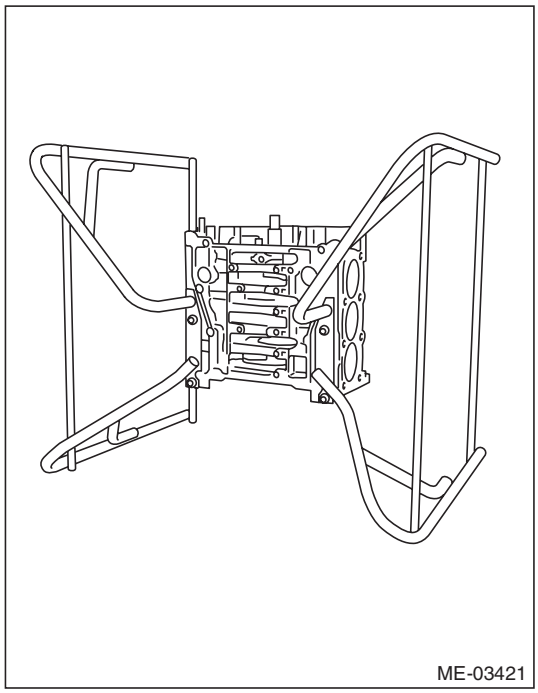

21) Remove ten O-rings from the underside of the cylinder block.

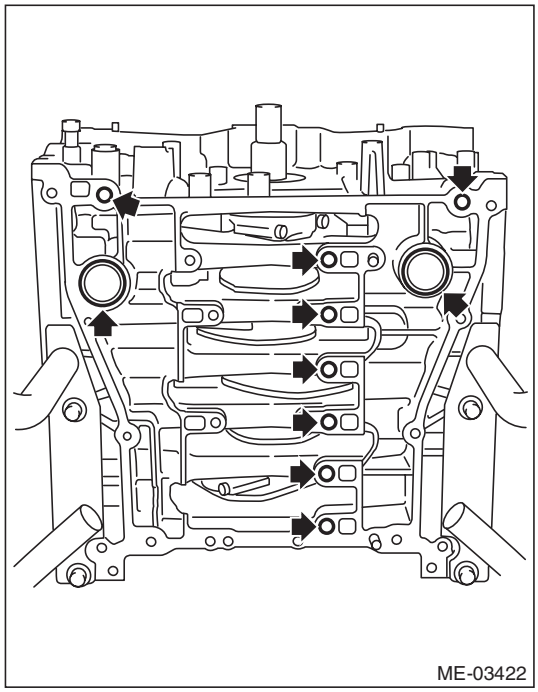

22) Mark the direction of front and the number of connecting rod caps.

23) Remove the #1 and #4 connecting rod caps and pistons from the cylinder block.

NOTE:
- Use 3/8 inch (9.5 sq.) for the extension and TORX® socket (E12).
- After removing the two connecting rod connection bolts, turning the crankshaft (ST) counterclockwise will remove the connecting rod cap.
- Mark each connecting rod cap and piston with connecting rod cap number and piston number.
- The removal of all connecting rod caps and pistons are performed in three separate steps. First, remove the #1 and #4 connecting rod caps and pistons are simultaneously, then the #2 and #5 connecting rod caps and pistons simultaneously, and then the #3 and #6 connecting rod caps and pistons simultaneously.

(1) Using the ST, turn the crankshaft and set the #1 piston at the mid point between TDC and BDC.

ST 18252AA000 CRANKSHAFT SOCKET

(2) Remove the two #1 connecting rod cap connection bolts, and remove the connecting rod cap.

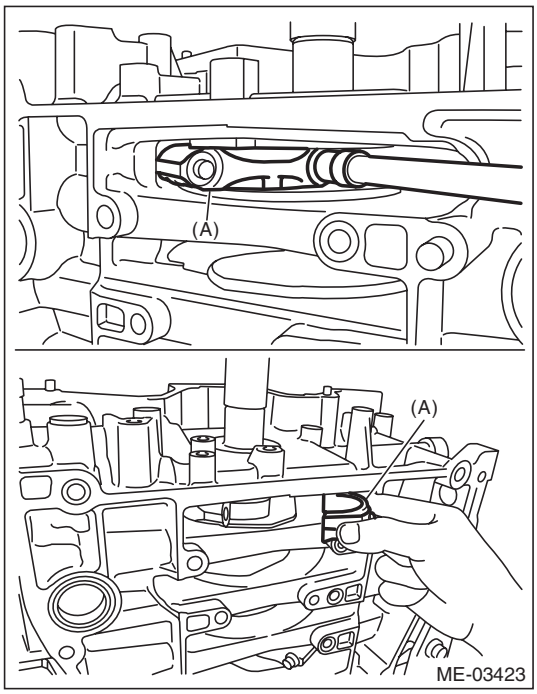

(A) #1 connecting rod cap

GETtheMANUALS.org

(3) Remove the two #4 connecting rod cap connection bolts, and remove the connecting rod cap.

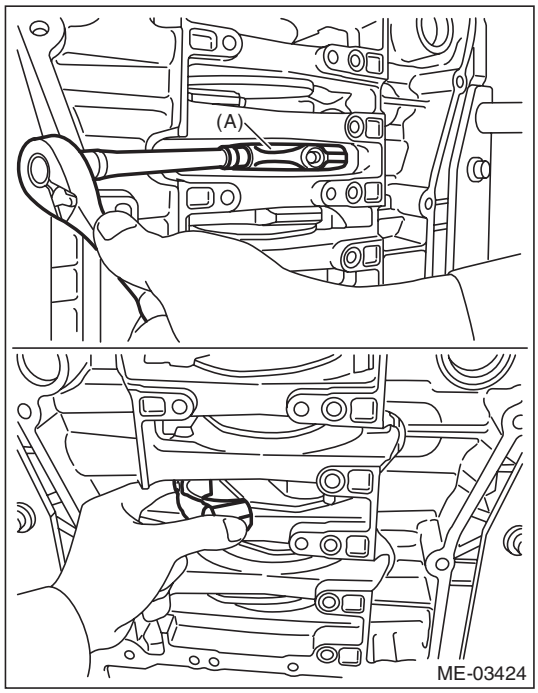

(A) #4 connecting rod cap

(4) Using the ST, turn the crankshaft and separate the positions of the crank pin and the large end of the #1 connecting rod.

ST 18252AA000 CRANKSHAFT SOCKET

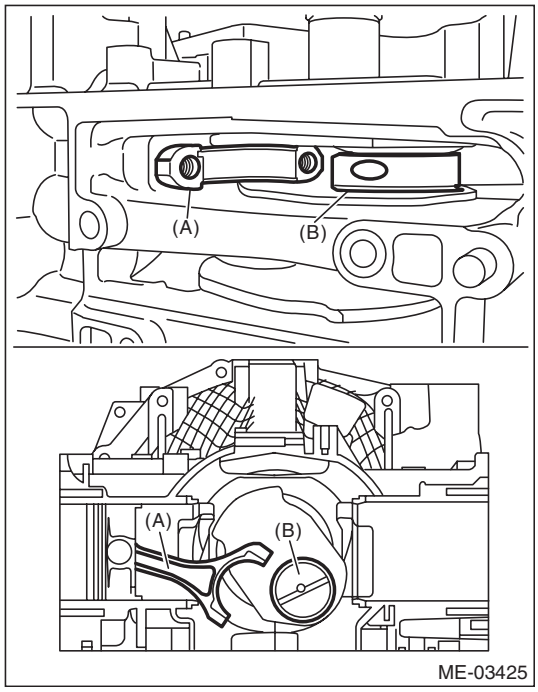

(A) #1 connecting rod
(B) Crank pin

(5) Push the #1 connecting rod in the direction of the arrow, and remove the #1 piston and connecting rod from the cylinder block.

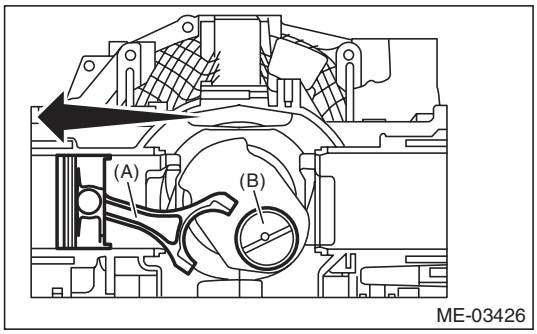

(A) #1 connecting rod
(B) Crank pin

(6) Using the ST, turn the crankshaft and separate the positions of the crank pin and the large end of the #4 connecting rod.

ST 18252AA000 CRANKSHAFT SOCKET

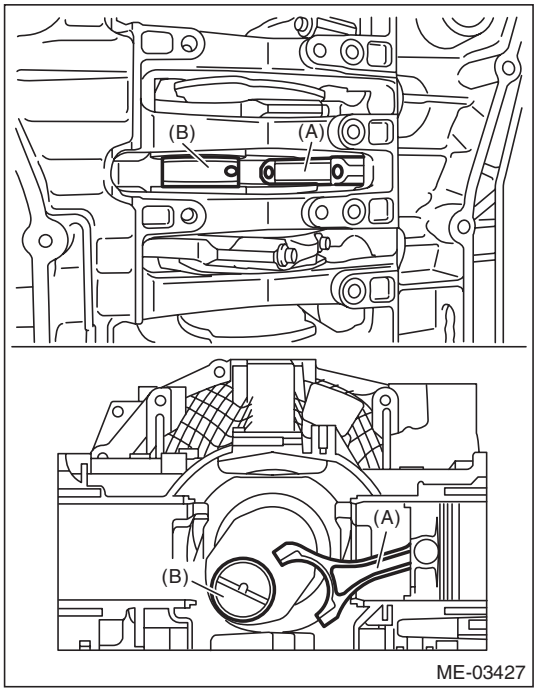

(A) #4 connecting rod
(B) Crank pin

GETtheMANUALS.org

(7) Push the #4 connecting rod in the direction of the arrow, and remove the #4 piston and connecting rod from the cylinder block.

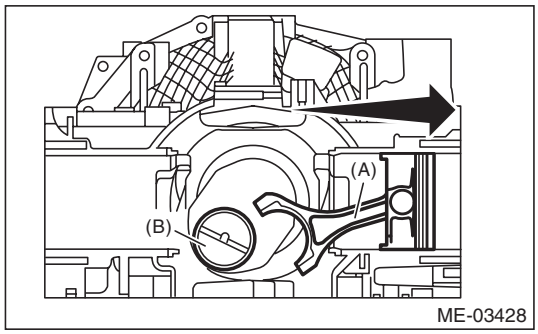

(A) #4 connecting rod
(B) Crank pin

24) Remove the #2 and #5 connecting rods and pistons from the cylinder block in the same manner.
ST 18252AA000 CRANKSHAFT SOCKET
25) Remove the #3 and #6 connecting rods and pistons from the cylinder block in the same manner.
ST 18252AA000 CRANKSHAFT SOCKET
26) Face the cylinder block (RH) up.

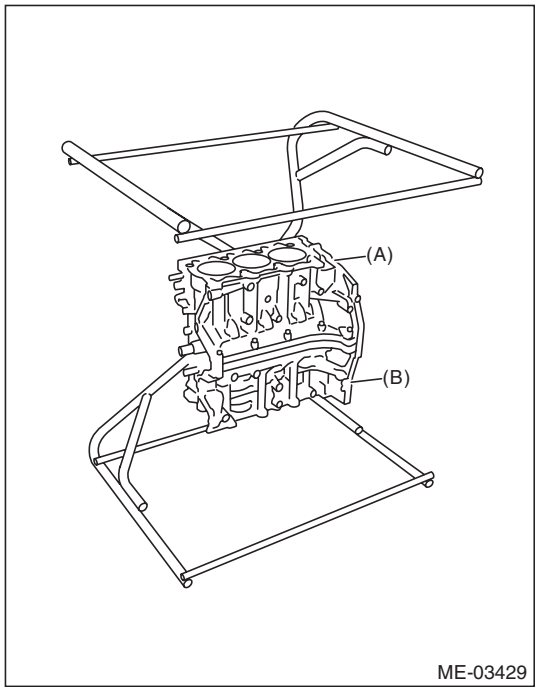

(A) Cylinder block (RH)
(B) Cylinder block (LH)

GETtheMANUALS.org

27) Remove the upper bolt.

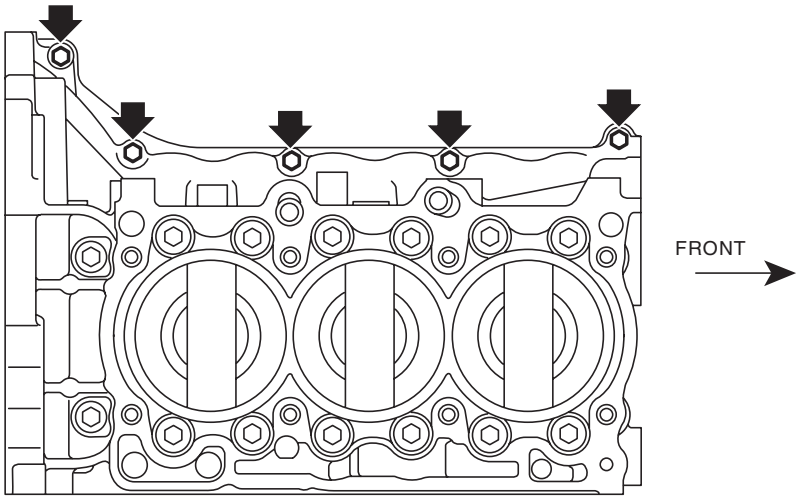

28) Loosen the cylinder block bolts in the order indicated in the figure, and separate cylinder block (RH) and (LH).

NOTE:
Confirm that the crankshaft is remaining in the cylinder block (LH).
If the cylinder block (RH) is lifted carelessly when separating, the crankshaft may stick to cylinder block (RH), then fall off.

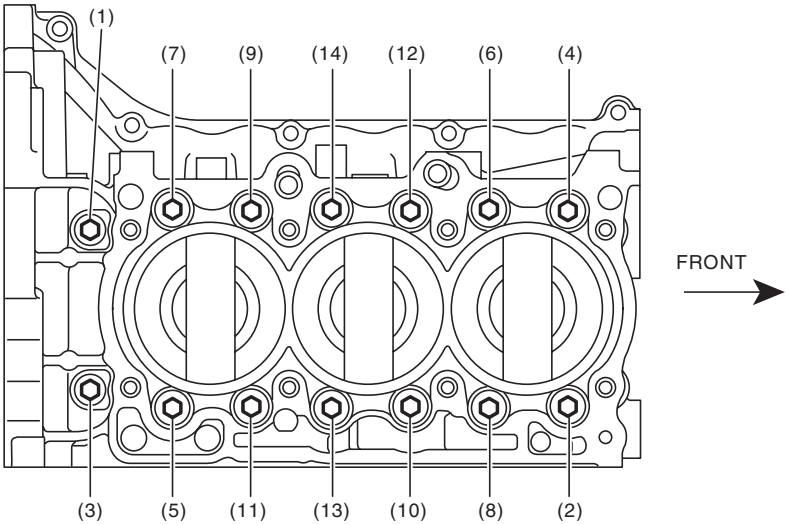

29) Remove the rear oil seal.
30) Remove the crankshaft from cylinder block (LH).
31) Remove the crankshaft bearings from cylinder block using a hammer handle.

NOTE:
- Do not confuse the combination of crankshaft bearings.
- Press the bearing at the end opposite to locking lip.

GETtheMANUALS.org

B: INSTALLATION

1) After setting the cylinder block to ST, install the crankshaft bearing.
ST 18232AA000 ENGINE STAND

NOTE:
Apply a coat of engine oil to the bearing and crankshaft journal.
2) Mount the crankshaft in cylinder block (LH).
3) Apply liquid gasket to the mating surfaces of cylinder block (RH).

CAUTION:
Do not allow liquid gasket to run over into oil passages, bearing grooves, etc.

NOTE:
Install within 5 min. after applying liquid gasket.

Liquid gasket:
THREE BOND 1217G (Part No. K0877Y0100) or equivalent

Liquid gasket applying diameter:
1.0±0.2 mm (0.039±0.008 in)

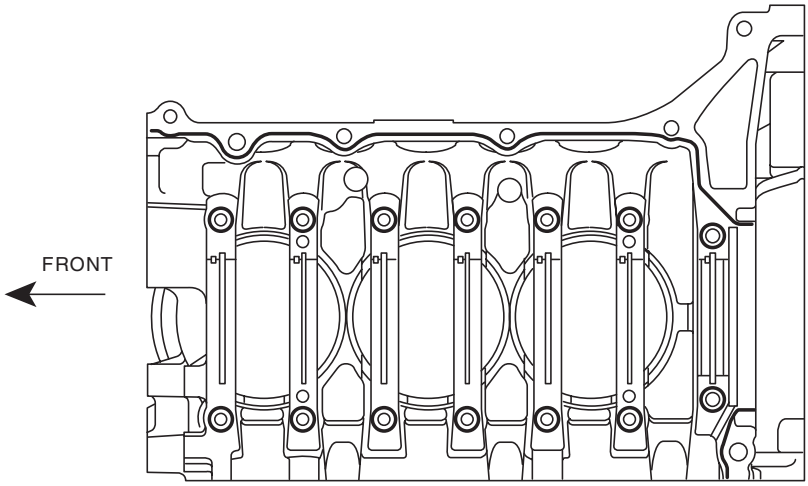

ME-03431

4) Attach cylinder block (RH) to cylinder block (LH).
5) Apply a coat of engine oil to the washer and bolt thread.

GETtheMANUALS.org

6) Tighten all bolts in the numerical order as shown in the figure.

Tightening torque:
12 N·m (1.2 kgf-m, 8.9 ft-lb)

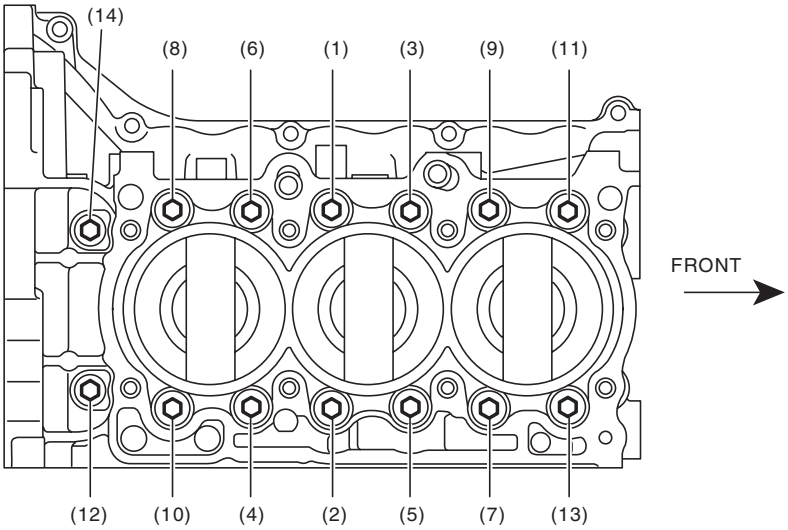

7) Retighten all bolts in the numerical order as shown in the figure.

Tightening torque:
18 N·m (1.8 kgf-m, 13.3 ft-lb)

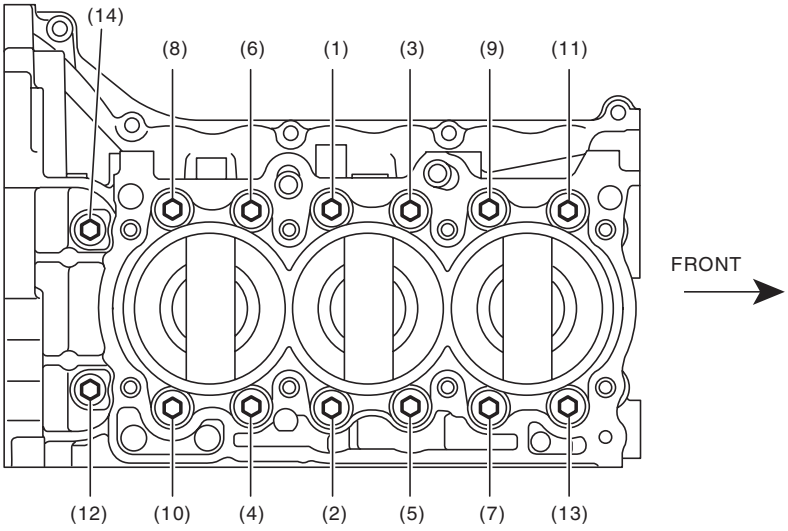

GETtheMANUALS.org

8) Tighten all bolts by 90° in numerical order as shown in the figure.

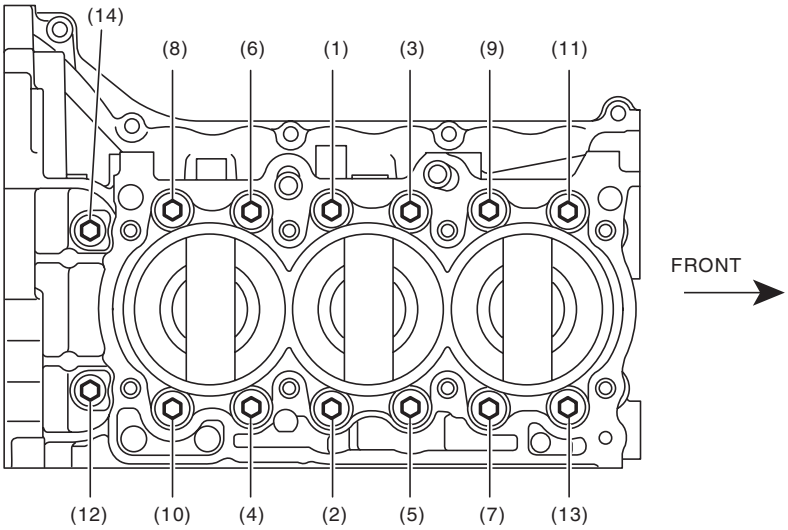

9) Install the upper bolt to cylinder block.

Tightening torque:
25 N·m (2.5 kgf-m, 18.4 ft-lb)

NOTE:
Remove any liquid gasket squeezed out onto the seal surface between the chain cover and oil pan upper, after tightening the cylinder block connecting bolts.

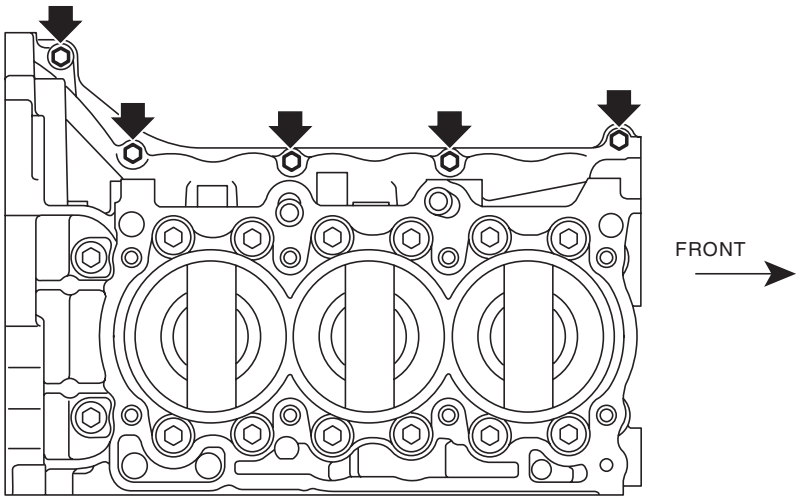

GETtheMANUALS.org

10) Apply a coat of engine oil to the oil seal inner periphery and outer periphery, and install the rear oil seal using ST1 and ST2.

NOTE:
Use a new rear oil seal.

ST1	499597100	CRANKSHAFT OIL SEAL GUIDE
ST2	499587200	CRANKSHAFT OIL SEAL INSTALLER

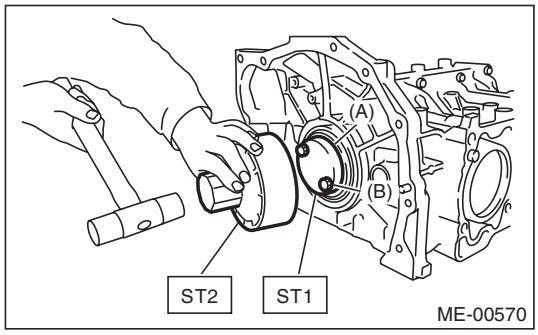

(A) Rear oil seal
(B) Drive plate installation bolt

11) Face the front of the engine up, standing the engine on one end.

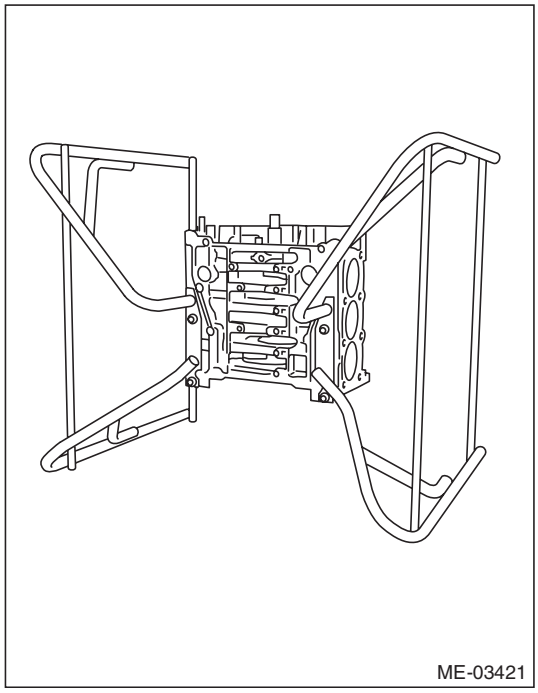

12) Attach the piston ring and oil ring to the piston.
(1) Position the top ring gap at (A) in the figure.
(2) Position the second ring gap at (B).

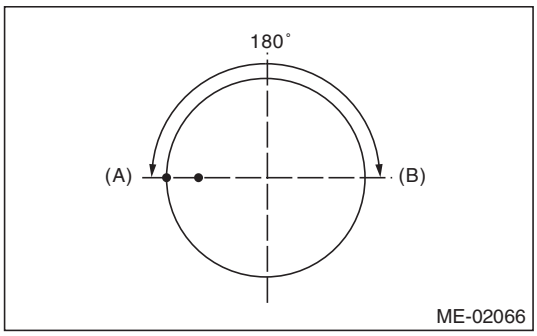

(3) Position the upper rail gap at (C) in the figure.
(4) Position the expander gap at (D) in the figure.
(5) Position the lower rail gap at (E) in the figure.

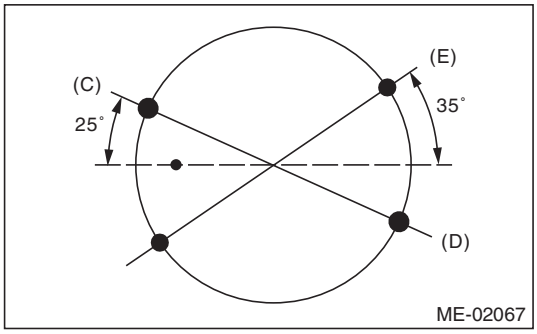

CAUTION:
- **Make sure ring gaps do not face the same direction.**
- **Make sure ring gaps are not within the piston skirt area.**
- **Assemble so that the stamp mark N faces towards the top of the piston.**

13) Install the #1 piston and connecting rod to the cylinder block.
(1) Apply engine oil to the outer circumference of the piston and in the cylinder block.
(2) Face the front mark of piston (A) towards the front of the engine, and set the piston to the ST.

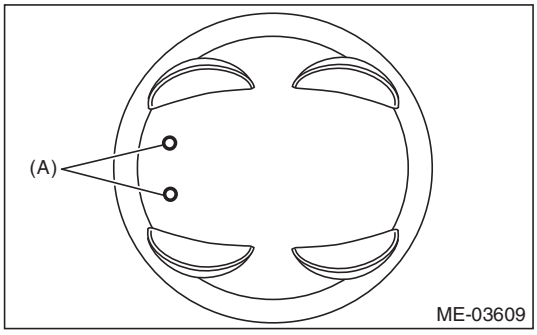

GETtheMANUALS.org

(3) Using ST, press-fit the piston into cylinder block.

NOTE:
When inserting the piston into the cylinder block, perform according to the items listed below.
• Insert while lightly tapping the top of the piston with the handle of a plastic hammer.
• Insert while making sure that the large end of the connecting rod does not scratch the cylinder liner.
• Insert while continually making sure that the large end of the connecting rod does not touch the crankshaft.

ST 398744300 PISTON GUIDE

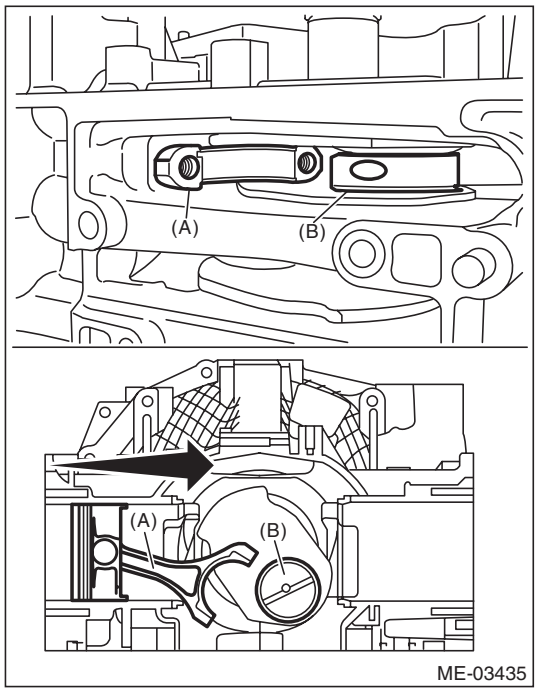

(A) #1 connecting rod
(B) Crank pin

(4) Using the ST, turn the crankshaft and match the positions of the crank pin and the large end of the connecting rod.

ST 18252AA000 CRANKSHAFT SOCKET

(5) Install the connecting rod cap.

Tightening torque:
60 N·m (6.1 kgf-m, 44.3 ft-lb)

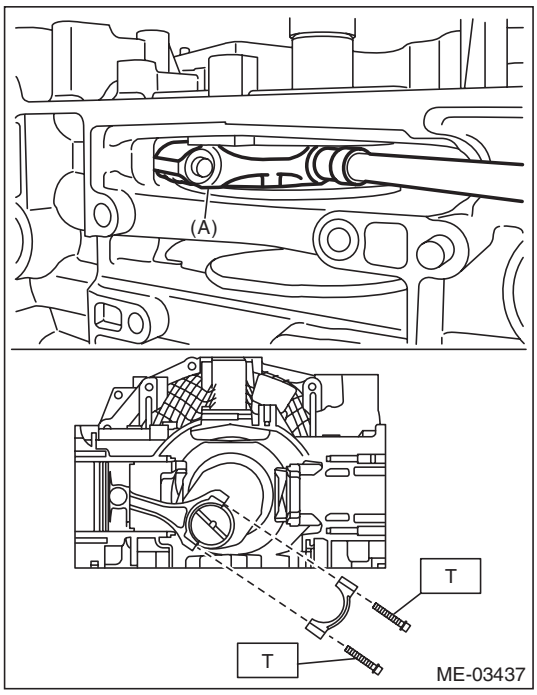

(A) #1 connecting rod

14) In the same procedures as for the #1 piston, install the piston and connecting rods to the cylinder block, in the order of #2, #3, #4, #5 and #6.

GETtheMANUALS.org

15) Install the O-ring to the underside of the cylinder block.

NOTE:
Use new O-rings.

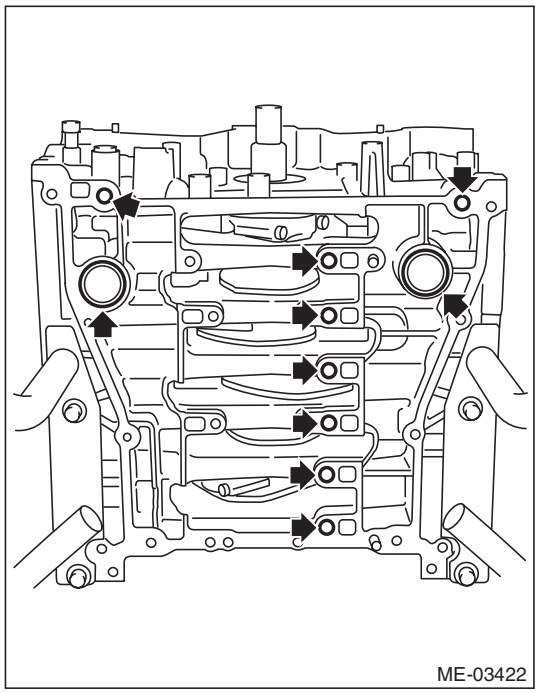

16) Apply liquid gasket to the mating surface of oil pan upper.

NOTE:
Install within 5 min. after applying liquid gasket.

Liquid gasket:
THREE BOND 1217G (Part No. K0877Y0100) or equivalent

Liquid gasket applying diameter:
5.0±1.0 mm (0.20±0.04 in)

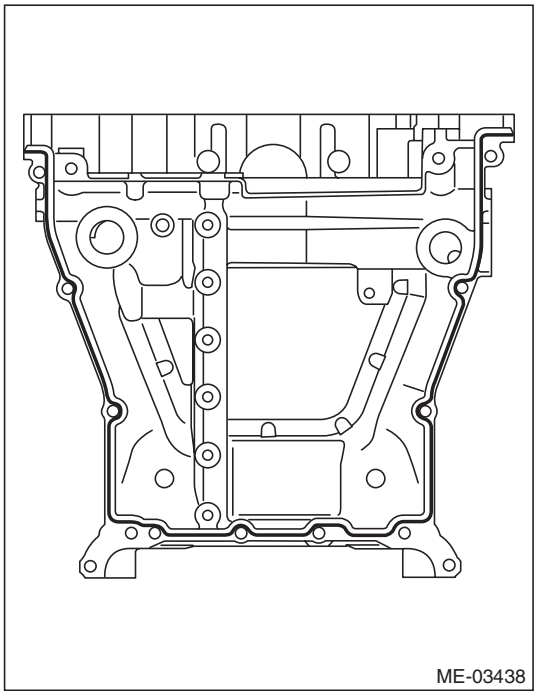

GETtheMANUALS.org

17) Temporarily tighten the oil pan upper.
18) Tighten the oil pan upper installing bolts in the numerical order as shown in the figure.

Tightening torque:
18 N·m (1.8 kgf-m, 13.3 ft-lb)

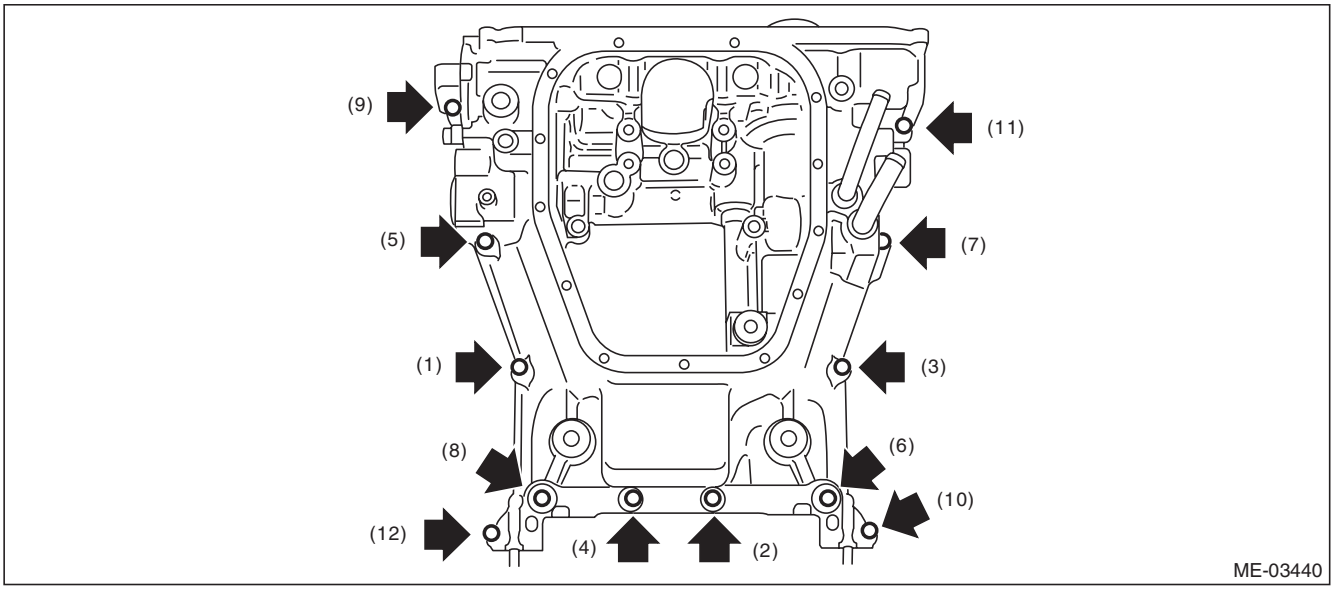

19) Install the thermostat and thermostat cover.

Tightening torque:
6.4 N·m (0.7 kgf-m, 4.7 ft-lb)

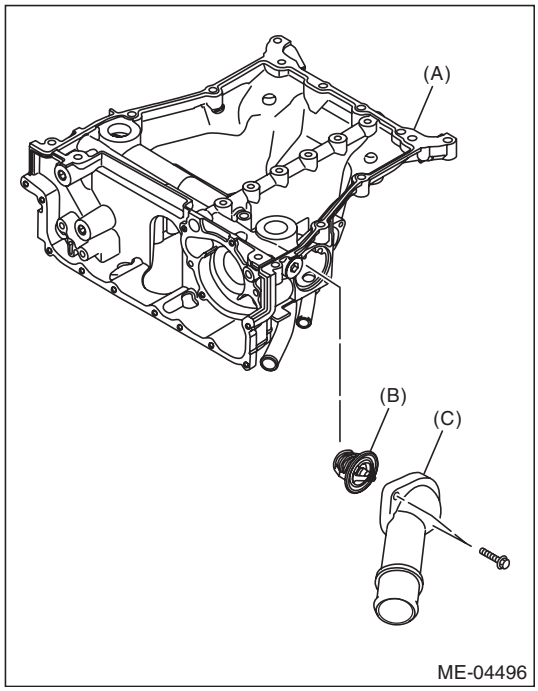

(A) Oil pan upper
(B) Thermostat
(C) Thermostat cover

20) Install the oil level switch. <Ref. to LU(H6DO)-17, INSTALLATION, Oil Level Switch.>
21) Install the oil pump. <Ref. to LU(H6DO)-13, INSTALLATION, Oil Pump.>

GETtheMANUALS.org

22) Tighten the oil cooler connector to install the oil cooler to the oil pan upper.

Tightening torque:
54 N·m (5.5 kgf-m, 39.8 ft-lb)

NOTE:
Use new O-rings.

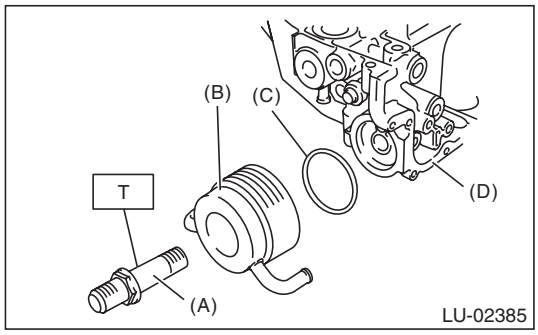

(A) Oil cooler connector
(B) Oil cooler
(C) O-ring
(D) Oil pan upper

23) Apply liquid gasket to the matching surface of oil pan lower.

NOTE:
Install within 5 min. after applying liquid gasket.

Liquid gasket:
THREE BOND 1217G (Part No. K0877Y0100) or equivalent

Liquid gasket applying diameter:
5.0±1.0 mm (0.20±0.04 in)

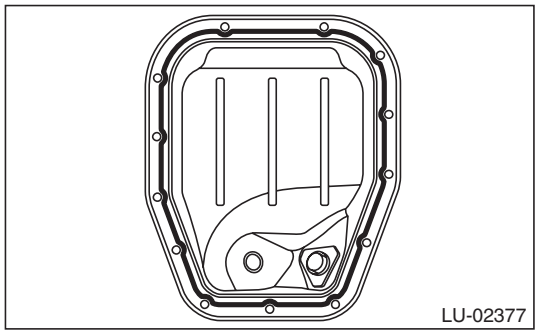

24) Tighten the oil pan lower installing bolts in the numerical order as shown in the figure.

Tightening torque:
6.4 N·m (0.7 kgf-m, 4.7 ft-lb)

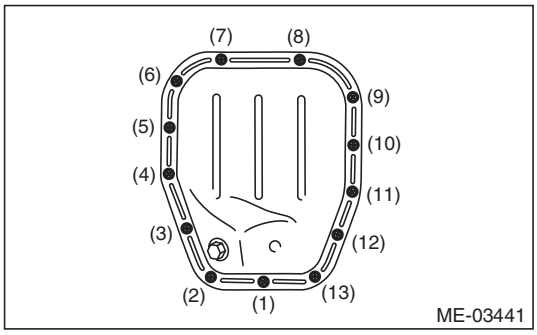

25) Install the crankshaft position sensor plate.

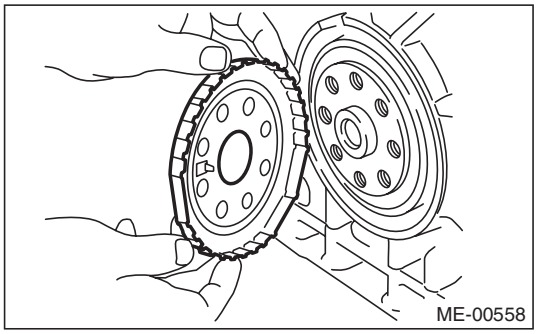

26) Install the crankshaft position sensor.

Tightening torque:
6.4 N·m (0.7 kgf-m, 4.7 ft-lb)

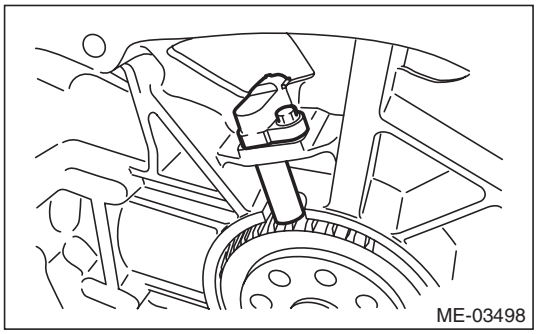

27) Install the drive plate. <Ref. to 5AT-64, INSTALLATION, Drive Plate.>
28) Install the cylinder head. <Ref. to ME(H6DO)-93, INSTALLATION, Cylinder Head.>
29) Install the camshaft. <Ref. to ME(H6DO)-85, INSTALLATION, Camshaft.>
30) Install the crank sprocket. <Ref. to ME(H6DO)-83, INSTALLATION, Crank Sprocket.>
31) Install the cam sprocket. <Ref. to ME(H6DO)-82, INSTALLATION, Cam Sprocket.>
32) Install the timing chain assembly. <Ref. to ME(H6DO)-69, INSTALLATION, Timing Chain Assembly.>
33) Install the chain cover. <Ref. to ME(H6DO)-56, INSTALLATION, Chain Cover.>

GETtheMANUALS.org

34) Install the crank pulley. <Ref. to ME(H6DO)-52, INSTALLATION, Crank Pulley.>
35) Install the engine to the vehicle. <Ref. to ME(H6DO)-40, INSTALLATION, Engine Assembly.>

C: DISASSEMBLY

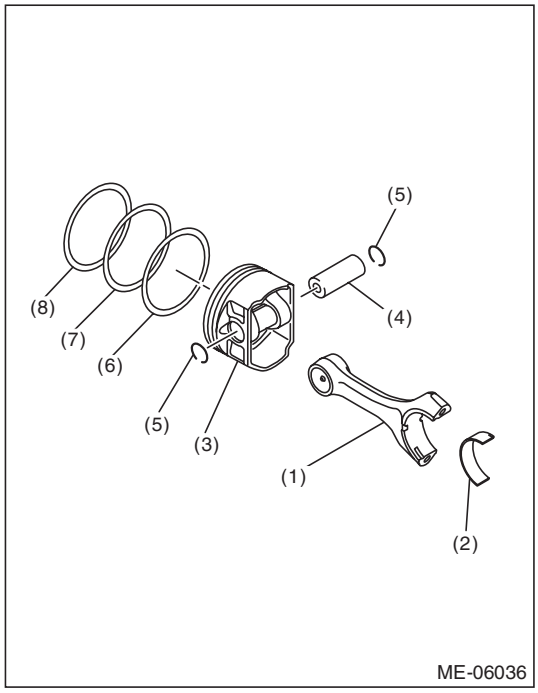

(1) Connecting rod
(2) Connecting rod bearing
(3) Piston
(4) Piston pin
(5) Circlip
(6) Oil ring
(7) Second ring
(8) Top ring

NOTE:
To prevent confusion of various parts, mark each part.
1) Remove the connecting rod bearing.
2) Remove the piston rings using piston ring expander.
3) Remove the oil ring by hand.

NOTE:
Arrange the removed piston rings in proper order, to prevent confusion.
4) Remove the circlip on one end from the piston using a flat tip screwdriver.

NOTE:
Be careful not damage the piston, by wrapping the tip of flat tip screwdriver with tape.
5) Remove the piston pin from the piston.
6) Separate the piston and connecting rod.

NOTE:
Mark the direction of front side to each connecting rod.
7) Remove the circlip on other end from the piston using a flat tip screwdriver.

NOTE:
Be careful not damage the piston, by wrapping the tip of flat tip screwdriver with tape.
8) Remove the plug and orifice from the cylinder block as necessary. <Ref. to ME(H6DO)-13, CYLINDER BLOCK, COMPONENT, General Description.>

D: ASSEMBLY

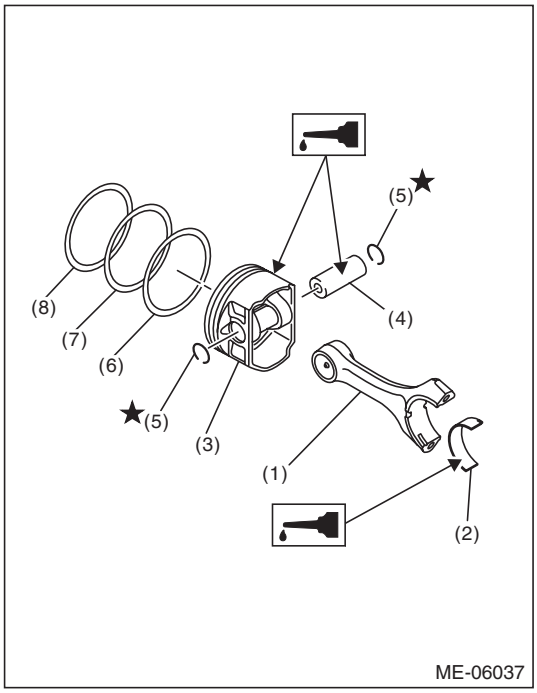

(1) Connecting rod
(2) Connecting rod bearing
(3) Piston
(4) Piston pin
(5) Circlip
(6) Oil ring
(7) Second ring
(8) Top ring

1) Apply engine oil to the surface of the connecting rod bearing. Attach the connecting rod bearing to the connecting rod.

GETtheMANUALS.org

2) Install the circlip on one end of the piston using a flat tip screwdriver.

NOTE:
- Be careful not damage the piston, by wrapping the tip of flat tip screwdriver with tape.
- Make sure the circlip is firmly inserted into the circlip groove.
- After installing the circlip, rotate the circlip so that its end part (a) and the cutout portion of circlip groove (b) do not match.

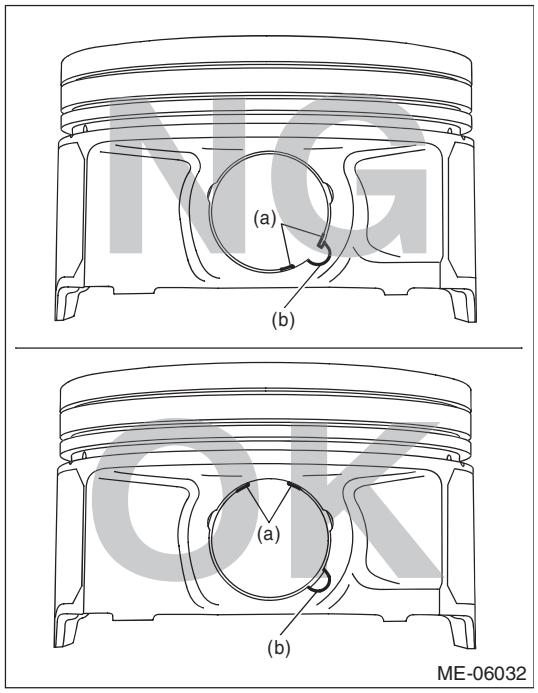

3) Set the piston to the connecting rod.

NOTE:
Align the front mark of piston and the connecting rod direction correctly as shown in the figure.

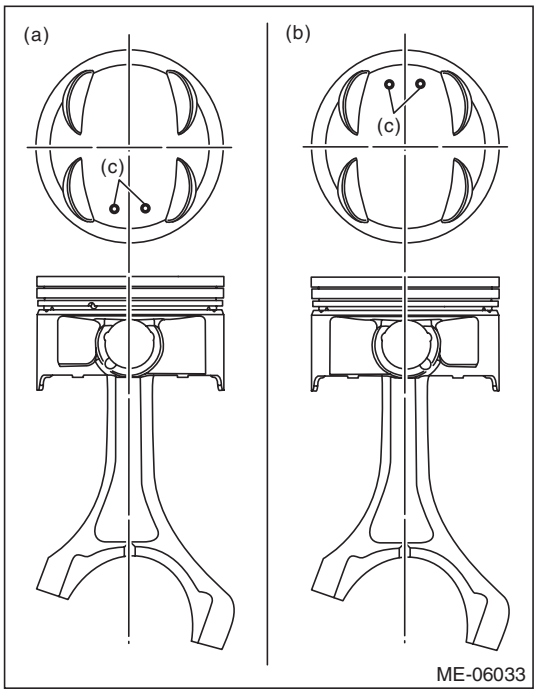

(a) RH side (#1, #3 and #5)
(b) LH side (#2, #4 and #6)
(c) Front mark

4) Apply engine oil to the piston pin, and attach the piston pin.

GETtheMANUALS.org

5) Install the circlip on the piston using a flat tip screwdriver.

NOTE:
- Be careful not damage the piston and piston pin, by wrapping the tip of flat tip screwdriver with tape.
- Make sure the circlip is firmly inserted into the circlip groove.
- After installing the circlip, rotate the circlip so that its end part (a) and the cutout portion of circlip groove (b) do not match.

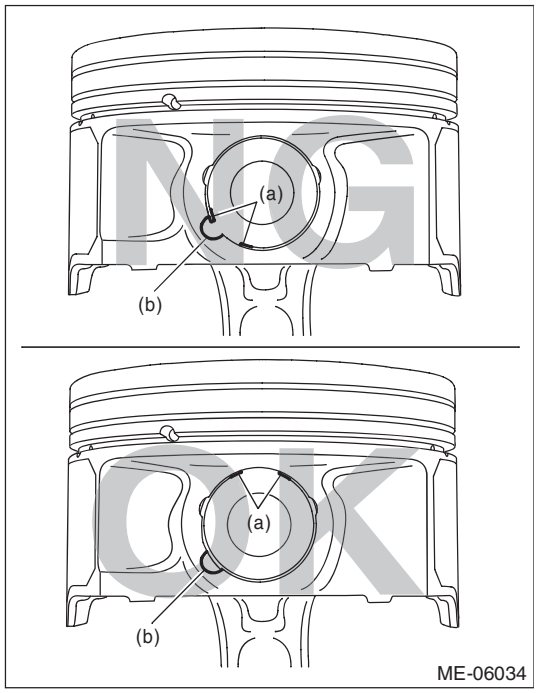

6) Install the oil ring upper rail, expander and lower rail by hand.
7) Install the second ring and top ring using piston ring expander.
8) Install the plug and orifice to the cylinder block as necessary. <Ref. to ME(H6DO)-13, CYLINDER BLOCK, COMPONENT, General Description.>

E: INSPECTION

1. CYLINDER BLOCK

1) Visually check for cracks or damage. Use liquid penetrant tester on the important sections for checking. Check that there are no marks of gas leaking or water leaking on gasket installing surface.
2) Check the oil passages for clogging.
3) Inspect the cylinder block surface that mates with cylinder head for warping by using a straight edge If the warpage exceeds limit, replace the cylinder block.

Warping limit:
0.020 mm (0.0008 in)

Standard height of cylinder block:
202 mm (7.95 in)

2. CYLINDER AND PISTON

1) The cylinder bore size is stamped on the front upper face of the cylinder block.

NOTE:
- Measurement should be performed at a temperature of 20°C (68°F).
- Standard sized pistons are classified into two grades, “A” and “B”. These grades should be used as guide lines in selecting a standard piston.

Standard diameter:
A: 92.005 — 92.015 mm (3.6222 — 3.6226 in)
B: 91.995 — 92.005 mm (3.6218 — 3.6222 in)

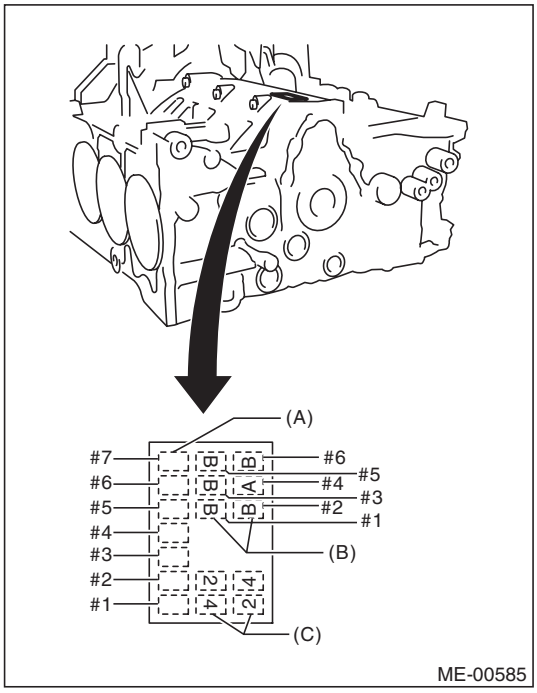

(A) Main journal size mark
(B) Cylinder bore size mark
(C) Cylinder block (RH) – (LH) combination mark

GETtheMANUALS.org

2) Measure inner diameter of each cylinder.
Measure the inner diameter of each cylinder in both the thrust and piston pin directions at the heights as shown in the figure, using a cylinder bore gauge.

NOTE:
Measurement should be performed at a temperature of 20°C (68°F).

Cylindricality:
Limit
0.030 mm (0.0012 in)

Out-of-roundness:
Limit
0.010 mm (0.0004 in)

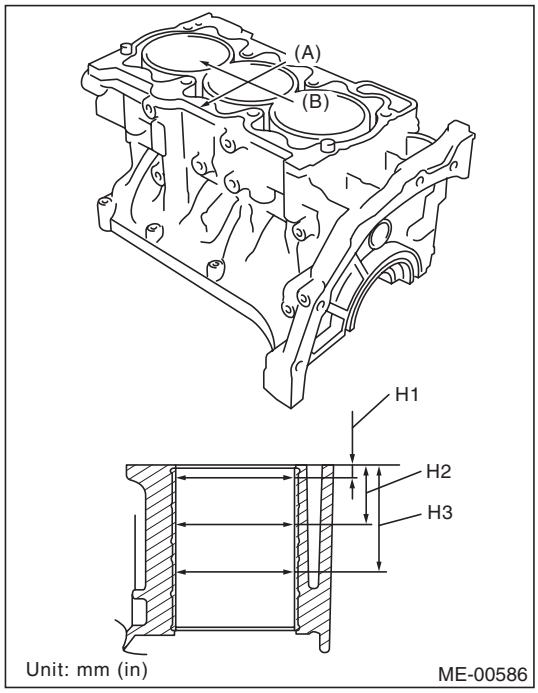

(A) Thrust direction
(B) Piston pin direction
H1: 10 mm (0.39 in)
H2: 45 mm (1.77 in)
H3: 80 mm (3.15 in)

3) When the piston is to be replaced due to general or cylinder wear, select a suitable sized piston by measuring the piston clearance.
4) Measure outer diameter of each piston.
Measure the outer diameter of each piston at the height as shown in the figure. (Thrust direction)

NOTE:
Measurement should be performed at a temperature of 20°C (68°F).

Piston grade point H:
37.3 mm (1.4685 in)

Piston outer diameter:
Standard
A: 92.005 — 92.015 mm (3.6222 — 3.6226 in)
B: 91.995 — 92.005 mm (3.6218 — 3.6222 in)
0.25 mm (0.0098 in) oversize
92.245 — 92.265 mm (3.6317 — 3.6325 in)
0.50 mm (0.0197 in) oversize
92.495 — 92.515 mm (3.6415 — 3.6423 in)

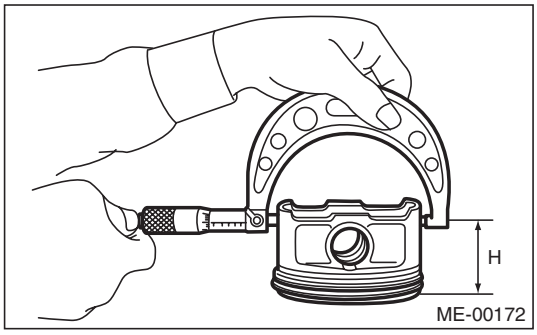

5) Calculate the clearance between cylinder and piston.

NOTE:
Measurement should be performed at a temperature of 20°C (68°F).

Clearance between cylinder and piston at 20°C (68°F):
Standard
–0.010 — 0.010 mm (–0.0004 — 0.0004 in)

6) Boring and honing:
(1) If any of the measured value of cylindricality, out-of-roundness or cylinder-to-piston clearance is out of standard or if there is any damage on the cylinder wall, rebore it to replace with an oversize piston.

CAUTION:
When any of the cylinders needs reboring, all other cylinders must be bored at the same time, and replaced with oversize pistons.

(2) If the cylinder inner diameter exceeds the limit after boring and honing, replace the cylinder block.

NOTE:
Immediately after reboring, the cylinder diameter may differ from its real diameter due to temperature rise. Thus, when measuring the cylinder diameter, wait until it has cooled to room temperature.

Cylinder inner diameter boring limit (diameter):
To 92.515 mm (3.6717 in)

GETtheMANUALS.org

3. PISTON AND PISTON PIN

1) Check the piston and piston pin for damage, cracks or wear. Replace if faulty.
2) Check the piston ring groove for wear or damage. Replace if faulty.
3) Make sure that the piston pin can be inserted into the piston pin hole with a thumb at 20°C (68°F). Replace if faulty.

Clearance between piston pin hole and piston pin:

Standard

0.004 — 0.008 mm (0.0002 — 0.0003 in)

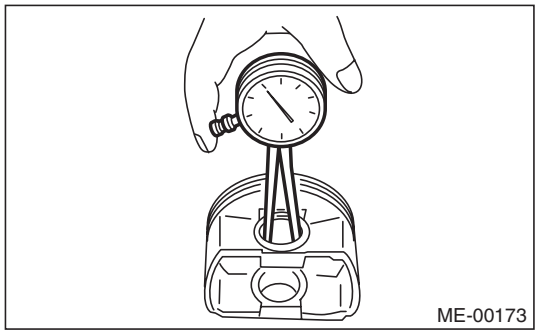

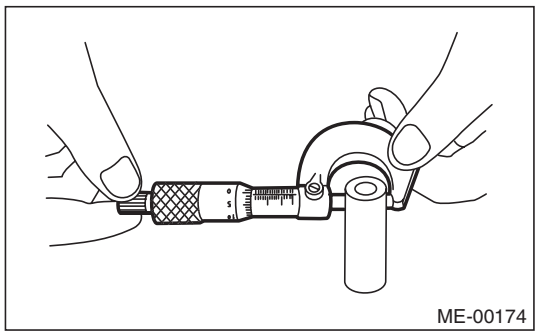

4) Check the snap ring installation groove (A) on the piston for burr. If necessary, remove burr from the groove so that the piston pin can lightly move.

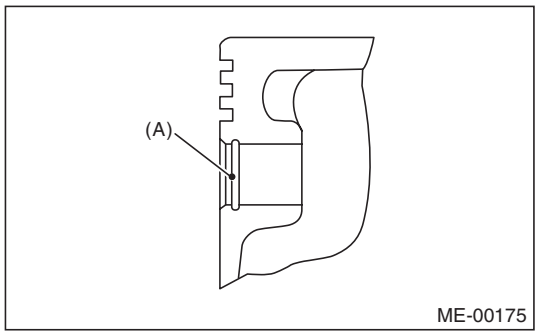

5) Check the piston pin snap ring for distortion, cracks and wear.

4. PISTON RING

1) If the piston ring is broken, damaged or worn, or if its tension is insufficient, or when the piston is replaced, replace the piston ring with a new part of the same size as piston.

NOTE:
- The top ring and second ring have the mark to determine the direction for installing. When installing the ring to piston, face marks to the top side.
- Oil ring consists of the upper rail, expander and lower rail. When installing to the piston, be careful of the direction of each rail.

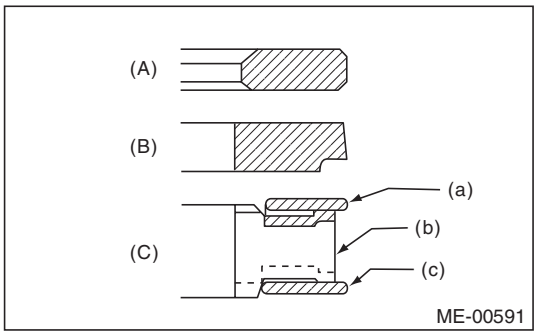

(A) Top ring
(B) Second ring
(C) Oil ring
(a) Upper rail
(b) Expander
(c) Lower rail

2) Squarely place the piston ring and oil ring in cylinder, and measure the piston ring gap with a thickness gauge.

		Standard mm (in)
Piston ring gap	Top ring	0.20 — 0.35 (0.0079 — 0.0138)
	Second ring	0.40 — 0.50 (0.0157 — 0.0197)
	Oil ring	0.20 — 0.50 (0.0079 — 0.0197)

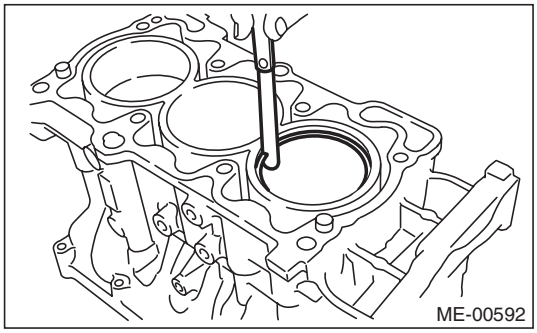

GETtheMANUALS.org

3) Fit the piston ring straight into the piston ring groove, then measure the clearance between piston ring and piston ring groove with a thickness gauge.

NOTE:
Before measuring the clearance, clean the piston ring groove and piston ring.

		Standard mm (in)
Clearance between piston ring and piston ring groove	Top ring	0.040 — 0.080 (0.0016 — 0.0031)
	Second ring	0.030 — 0.070 (0.0012 — 0.0028)
Clearance between oil ring and oil ring groove		0.065 — 0.165 (0.0026 — 0.0065)

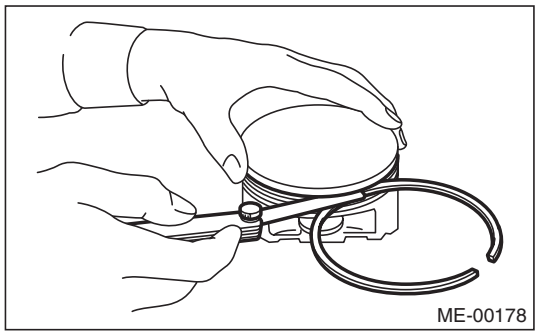
ME-00178

5. CONNECTING ROD

1) Replace the connecting rod, if the large or small end thrust surface is damaged.
2) Check for bend or twist using a connecting rod aligner. Replace the connecting rod if the bend or twist exceeds the limit.

Limit of bend or twist per 100 mm (3.94 in) in length:
0.10 mm (0.0039 in)

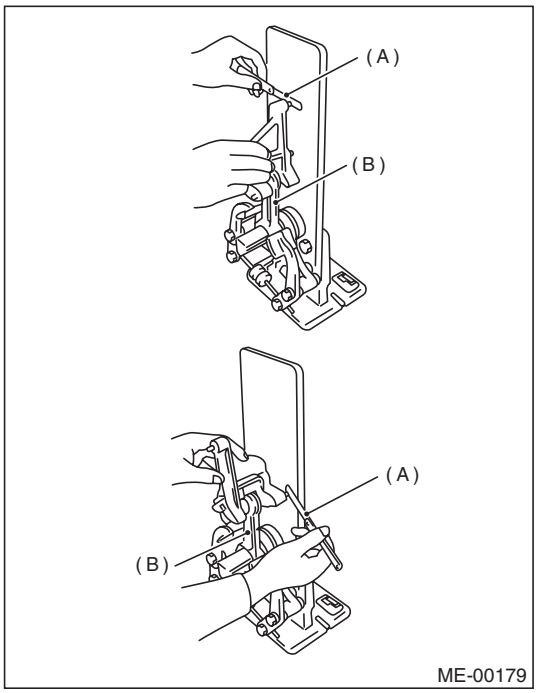

ME-00179

(A) Thickness gauge
(B) Connecting rod

3) Install the connecting rod with bearings attached to the crankshaft, and using a thickness gauge, measure the thrust clearance. If the thrust clearance exceeds the standard or uneven wear is found, replace the connecting rod.

Connecting rod thrust clearance:
Standard
0.070 — 0.330 mm (0.0028 — 0.0130 in)

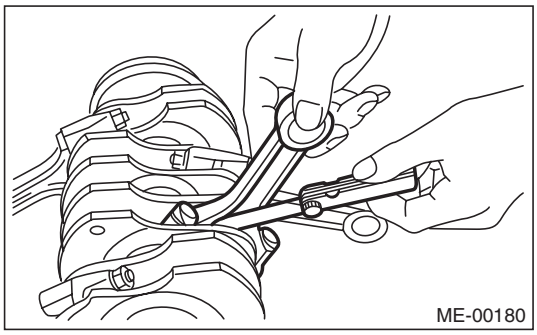
ME-00180

4) Inspect the connecting rod bearing for scar, peeling, seizure, melting, wear, etc.

GETtheMANUALS.org

5) Measure the oil clearance on each connecting rod bearing using plastigauge. If any oil clearance is not within the standard, replace the defective bearing with a new part of standard size or undersize as necessary.

Connecting rod oil clearance:
Standard
0.016 — 0.043 mm (0.0006 — 0.0017 in)

Unit: mm (in)

Bearing	Bearing size (Thickness at center)	Outer diameter of crank pin
Standard	1.489 — 1.505 (0.0586 — 0.0593)	51.976 — 52.000 (2.0463 — 2.0472)
0.03 (0.0012) Undersize	1.507 — 1.515 (0.0593 — 0.0596)	51.954 — 51.970 (2.0454 — 2.0461)
0.05 (0.0020) Undersize	1.517 — 1.525 (0.0597 — 0.0600)	51.934 — 51.950 (2.0446 — 2.0453)
0.25 (0.0098) Undersize	1.617 — 1.625 (0.0637 — 0.0640)	51.734 — 51.750 (2.0368 — 2.0374)

6) Inspect the bushing at connecting rod small end, and replace with a new part if worn or damaged.
7) Measure the piston pin clearance at connecting rod small end. If the measured value is not within the standard, replace it with a new part.

Clearance between piston pin and bushing:
Standard
0 — 0.022 mm (0 — 0.0009 in)

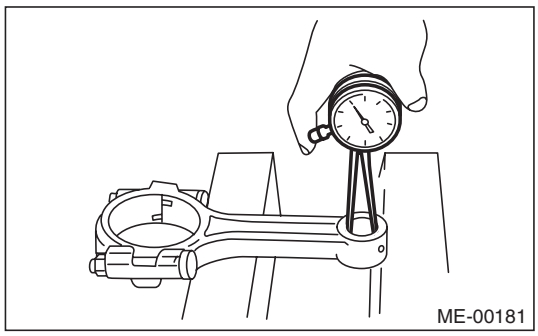
ME-00181

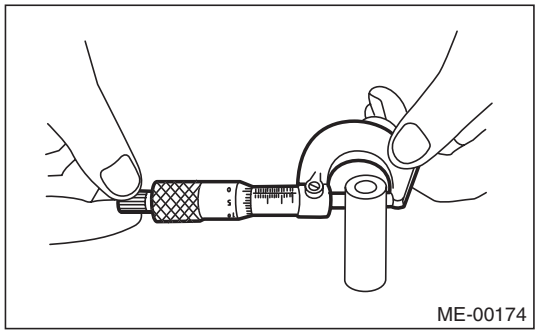
ME-00174

8) The replacement procedure for the connecting rod small end bushing is as follows.
(1) Remove the bushing from connecting rod with ST and press.
(2) Press the bushing with the ST after applying oil on the periphery of new bushing.

ST 18350AA000 CONNECTING ROD BUSHING REMOVER AND INSTALLER

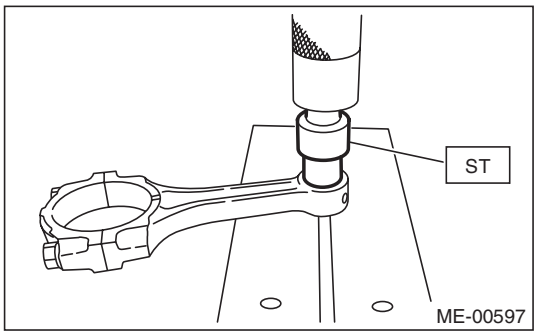

ME-00597

(3) Make two 3 mm (0.12 in) holes in the pressed bushing to match the pre-manufactured holes on the connecting rod, then ream the inside of the bushing.
(4) After completion of reaming, clean the bushing to remove chips.

GETtheMANUALS.org

6. CRANKSHAFT AND CRANKSHAFT BEARING

1) Clean the crankshaft completely, and check it for cracks using liquid penetrant tester. If defective, replace the crankshaft.
2) Check the crankshaft for bend, and repair or replace if needed. If it exceeds the limit, correct or replace it.

NOTE:
If a suitable V-block is not available, using the #1 and #7 crankshaft bearings on cylinder block, position the crankshaft on cylinder block. Then, measure the crankshaft bend using a dial gauge.

Crankshaft bend limit:
0.035 mm (0.0014 in)

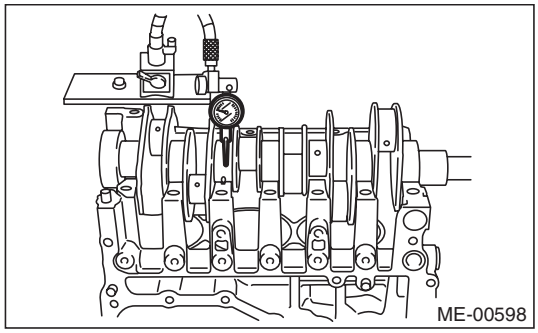
ME-00598

3) Inspect the crank journal and crank pin for wear. If they are not within the standard, replace the bearing with a suitable (undersize) one, and replace or grind to correct the crankshaft as necessary. When grinding the crank journal or crank pin, finish them to the specified dimensions according to the undersize bearing to be used.

Crank pin:
Out-of-roundness
Limit
0.005 mm (0.0002 in)
Cylindricality
Limit
0.006 mm (0.0002 in)
Grinding limit (dia.)
To 51.734 mm (2.0368 in)

Crank journal:
Out-of-roundness
Limit
0.005 mm (0.0002 in)
Cylindricality
Limit
0.006 mm (0.0002 in)
Grinding limit (dia.)
To 63.742 mm (2.5095 in)

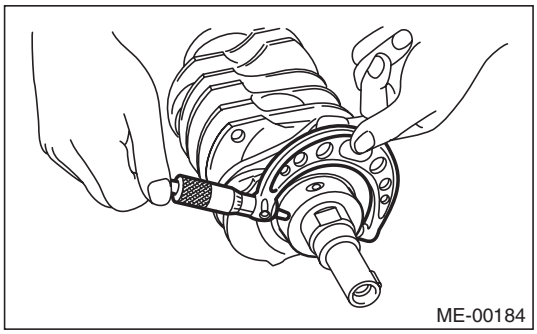
ME-00184

GETtheMANUALS.org

					Unit: mm (in)
		Crank journal diameter			Crank pin outer diameter
		#1, #3, #5	#7	#2, #4, #6	
Standard	Journal O.D.	63.992 — 64.016 (2.5194 — 2.5203)			51.976 — 52.000 (2.0463 — 2.0472)
	Bearing size (Thickness at center)	1.996 — 2.013 (0.0786 — 0.0793)	1.992 — 2.009 (0.0784 — 0.0791)	1.996 — 2.013 (0.0786 — 0.0793)	1.489 — 1.505 (0.0586 — 0.0593)
0.03 (0.0012) Undersize	Journal O.D.	63.962 — 63.978 (2.5182 — 2.5188)			51.954 — 51.970 (2.0454 — 2.0461)
	Bearing size (Thickness at center)	2.011 — 2.014 (0.0792 — 0.0793)	2.011 — 2.014 (0.0792 — 0.0793)	2.015 — 2.018 (0.0793 — 0.0794)	1.507 — 1.515 (0.0593 — 0.0596)
0.05 (0.0020) Undersize	Journal O.D.	63.942 — 63.958 (2.5174 — 2.5180)			51.934 — 51.950 (2.0446 — 2.0453)
	Bearing size (Thickness at center)	2.021 — 2.024 (0.0796 — 0.0797)	2.021 — 2.024 (0.0796 — 0.0797)	2.025 — 2.028 (0.0797 — 0.0798)	1.517 — 1.525 (0.0597 — 0.0600)
0.25 (0.0098) Undersize	Journal O.D.	63.742 — 63.758 (2.5095 — 2.5102)			51.734 — 51.750 (2.0368 — 2.0374)
	Bearing size (Thickness at center)	2.121 — 2.124 (0.0835 — 0.0836)	2.121 — 2.124 (0.0835 — 0.0836)	2.125 — 2.128 (0.0837 — 0.0838)	1.617 — 1.625 (0.0637 — 0.0640)

4) Use a thickness gauge to measure the thrust clearance of crankshaft at center bearing. If clearance exceeds the standard, replace the bearing.

Crankshaft thrust clearance:
Standard
0.030 — 0.115 mm (0.0012 — 0.0045 in)

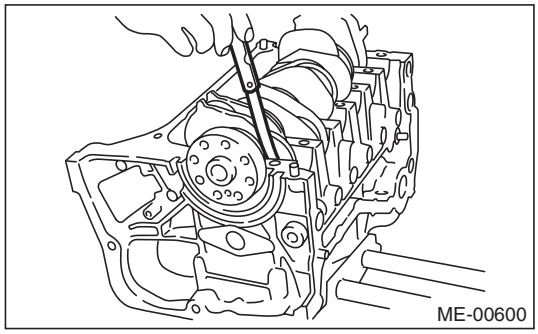

5) Inspect individual crankshaft bearings for signs of flaking, seizure, melting and wear.
6) Measure the oil clearance on each crankshaft bearing using plastigauge. If the measured value is out of standard, replace the defective bearing with an undersize one, and replace or grind to correct the crankshaft as necessary.

Crankshaft oil clearance:
Standard
0.010 — 0.030 mm (0.0004 — 0.0012 in)

GETtheMANUALS.org

21. Oil Flow Control Solenoid Valve

A: REMOVAL

Specifications for the oil flow control solenoid valve are included in the FU section. <Ref. to FU(H6DO)-47, REMOVAL, Oil Flow Control Solenoid Valve.>

B: INSTALLATION

Specifications for the oil flow control solenoid valve are included in the FU section. <Ref. to FU(H6DO)-47, INSTALLATION, Oil Flow Control Solenoid Valve.>

GETtheMANUALS.org

22.Intake and Exhaust Valve

A: SPECIFICATION

Refer to “Cylinder Head” for removal and installation procedures of the intake and exhaust valves. <Ref. to ME(H6DO)-92, REMOVAL, Cylinder Head.> <Ref. to ME(H6DO)-93, INSTALLATION, Cylinder Head.>

GETtheMANUALS.org

23. Piston

A: SPECIFICATION

Refer to “Cylinder Block” for removal and installation procedures of pistons. <Ref. to ME(H6DO)-104, REMOVAL, Cylinder Block.> <Ref. to ME(H6DO)-110, INSTALLATION, Cylinder Block.>

GETtheMANUALS.org

24. Connecting Rod

A: SPECIFICATION

Refer to “Cylinder Block” for removal and installation procedures of connecting rods. <Ref. to ME(H6DO)-104, REMOVAL, Cylinder Block.> <Ref. to ME(H6DO)-110, INSTALLATION, Cylinder Block.>

GETtheMANUALS.org

25. Crankshaft

A: SPECIFICATION

Refer to “Cylinder Block” for removal and installation procedures of the crankshaft. <Ref. to ME(H6DO)-104, REMOVAL, Cylinder Block.> <Ref. to ME(H6DO)-110, INSTALLATION, Cylinder Block.>

GETtheMANUALS.org

26. Engine Trouble in General

A: INSPECTION

NOTE:
The “RANK” shown in the chart shows the possibilities of the cause of trouble in order from “Very often” to “Rarely”.
A — Very often
B — Sometimes
C — Rarely

Symptoms	Problem parts etc.	Possible cause	RANK
1. Engine does not start.			
1) Starter does not turn.	Starter	Defective battery-to-starter harness	B
		Defective starter switch	C
		Defective inhibitor switch	C
		Defective starter	B
	Battery	Improper connection of terminal	A
		Run-down battery	A
		Defective charging system	B
	Friction	Seizure of crankshaft and connecting rod bearing	C
		Seized camshaft	C
		Seized or stuck piston and cylinder	C
2) Initial combustion does not occur.	Starter	Defective starter	C
	Engine control system <Ref. to EN(H6DO)(diag)-2, Basic Diagnostic Procedure.>		A
	Fuel line	Defective fuel pump and relay	A
		Clogged fuel line	C
		Lack of fuel or insufficient fuel	B
	Timing chain	Trouble	B
		Defective timing	B
	Compression	Incorrect valve clearance	C
		Loosened spark plug or defective gasket	C
		Loosened cylinder head bolt or defective gasket	C
		Improper valve sealing	C
		Defective valve stem	C
		Worn or broken valve spring	B
		Worn or stuck piston rings, cylinder and piston	C
		Incorrect valve timing	B
		Improper engine oil (low viscosity)	B

GETtheMANUALS.org

Symptoms	Problem parts etc.	Possible cause	RANK
3) Initial combustion occurs.	Engine control system <Ref. to EN(H6DO)(diag)-2, Basic Diagnostic Procedure.>		A
	Intake system	Defective intake manifold gasket	B
		Defective throttle body gasket	B
	Fuel line	Defective fuel pump and relay	C
		Clogged fuel line	C
		Lack of fuel or insufficient fuel	B
	Timing chain	Trouble	B
		Defective timing	B
	Compression	Incorrect valve clearance	C
		Loosened spark plug or defective gasket	C
		Loosened cylinder head bolt or defective gasket	C
		Improper valve sealing	C
		Defective valve stem	C
		Worn or broken valve spring	B
		Worn or stuck piston rings, cylinder and piston	C
		Incorrect valve timing	B
		Improper engine oil (low viscosity)	B
4) Engine stalls after initial combustion.	Engine control system <Ref. to EN(H6DO)(diag)-2, Basic Diagnostic Procedure.>		A
	Intake system	Loosened or cracked intake duct	B
		Loosened or cracked PCV hose	C
		Loosened or cracked vacuum hose	C
		Defective intake manifold gasket	B
		Defective throttle body gasket	B
		Dirty air cleaner element	C
	Fuel line	Clogged fuel line	C
		Lack of fuel or insufficient fuel	B
	Timing chain	Trouble	B
		Defective timing	B
	Compression	Incorrect valve clearance	C
		Loosened spark plug or defective gasket	C
		Loosened cylinder head bolt or defective gasket	C
		Improper valve sealing	C
		Defective valve stem	C
		Worn or broken valve spring	B
		Worn or stuck piston rings, cylinder and piston	C
		Incorrect valve timing	B
		Improper engine oil (low viscosity)	B

GETtheMANUALS.org

Symptoms	Problem parts etc.	Possible cause	RANK
2. Rough idle and engine stall	Engine control system <Ref. to EN(H6DO)(diag)-2, Basic Diagnostic Procedure.>		A
	Intake system	Loosened or cracked intake duct	A
		Loosened or cracked PCV hose	A
		Loosened or cracked vacuum hose	A
		Defective intake manifold gasket	B
		Defective throttle body gasket	B
		Defective PCV valve	C
		Loosened oil filler cap	B
		Dirty air cleaner element	C
	Fuel line	Defective fuel pump and relay	C
		Clogged fuel line	C
		Lack of fuel or insufficient fuel	B
	Timing chain	Defective timing	C
	Compression	Incorrect valve clearance	B
		Loosened spark plug or defective gasket	B
		Loosened cylinder head bolt or defective gasket	B
		Improper valve sealing	B
		Defective valve stem	C
		Worn or broken valve spring	B
		Worn or stuck piston rings, cylinder and piston	B
		Incorrect valve timing	A
		Improper engine oil (low viscosity)	B
	Lubrication system	Incorrect oil pressure	B
		Defective rocker cover gasket	C
	Cooling system	Over-heating	C
	Others	Evaporative emission control system malfunction	A
		Stuck or damaged throttle valve	B

GETtheMANUALS.org

Symptoms	Problem parts etc.	Possible cause	RANK
3. Low output, hesitation and poor acceleration	Engine control system <Ref. to EN(H6DO)(diag)-2, Basic Diagnostic Procedure.>		A
	Intake system	Loosened or cracked intake duct	A
		Loosened or cracked PCV hose	A
		Loosened or cracked vacuum hose	B
		Defective intake manifold gasket	B
		Defective throttle body gasket	B
		Defective PCV valve	B
		Loosened oil filler cap	B
		Dirty air cleaner element	A
	Fuel line	Defective fuel pump and relay	B
		Clogged fuel line	B
		Lack of fuel or insufficient fuel	C
	Timing chain	Defective timing	B
	Compression	Incorrect valve clearance	B
		Loosened spark plug or defective gasket	B
		Loosened cylinder head bolt or defective gasket	B
		Improper valve sealing	B
		Defective valve stem	C
		Worn or broken valve spring	B
		Worn or stuck piston rings, cylinder and piston	C
		Incorrect valve timing	A
		Improper engine oil (low viscosity)	B
	Lubrication system	Incorrect oil pressure	B
		Defective rocker cover gasket	C
	Cooling system	Over-heating	C
		Over-cooling	C
	Others	Evaporative emission control system malfunction	A

GETtheMANUALS.org

Symptoms	Problem parts etc.	Possible cause	RANK
4. Surging	Engine control system <Ref. to EN(H6DO)(diag)-2, Basic Diagnostic Procedure.>		A
	Intake system	Loosened or cracked intake duct	A
		Loosened or cracked PCV hose	A
		Loosened or cracked vacuum hose	A
		Defective intake manifold gasket	B
		Defective throttle body gasket	B
		Defective PCV valve	B
		Loosened oil filler cap	B
		Dirty air cleaner element	B
	Fuel line	Defective fuel pump and relay	B
		Clogged fuel line	B
		Lack of fuel or insufficient fuel	C
	Timing chain	Defective timing	B
	Compression	Incorrect valve clearance	B
		Loosened spark plug or defective gasket	C
		Loosened cylinder head bolt or defective gasket	C
		Improper valve sealing	C
		Defective valve stem	C
		Worn or broken valve spring	C
		Worn or stuck piston rings, cylinder and piston	C
		Incorrect valve timing	A
		Improper engine oil (low viscosity)	B
	Cooling system	Over-heating	B
	Others	Evaporative emission control system malfunction	C
5. Engine does not return to idle.	Engine control system <Ref. to EN(H6DO)(diag)-2, Basic Diagnostic Procedure.>		A
	Intake system	Loosened or cracked vacuum hose	A
	Others	Stuck or damaged throttle valve	A
6. Dieseling (Run-on)	Engine control system <Ref. to EN(H6DO)(diag)-2, Basic Diagnostic Procedure.>		A
	Cooling system	Over-heating	B
	Others	Evaporative emission control system malfunction	B
7. After burning in exhaust system	Engine control system <Ref. to EN(H6DO)(diag)-2, Basic Diagnostic Procedure.>		A
	Intake system	Loosened or cracked intake duct	C
		Loosened or cracked PCV hose	C
		Loosened or cracked vacuum hose	B
		Defective PCV valve	B
		Loosened oil filler cap	C
	Timing chain	Defective timing	B
	Compression	Incorrect valve clearance	B
		Loosened spark plug or defective gasket	C
		Loosened cylinder head bolt or defective gasket	C
		Improper valve sealing	B
		Defective valve stem	C
		Worn or broken valve spring	C
		Worn or stuck piston rings, cylinder and piston	C
		Incorrect valve timing	A
	Lubrication system	Incorrect oil pressure	C
	Cooling system	Over-cooling	C
	Others	Evaporative emission control system malfunction	C

GETtheMANUALS.org

Symptoms	Problem parts etc.	Possible cause	RANK
8. Knocking	Engine control system <Ref. to EN(H6DO)(diag)-2, Basic Diagnostic Procedure.>		A
	Intake system	Loosened oil filler cap	B
	Timing chain	Defective timing	B
	Compression	Incorrect valve clearance	C
		Incorrect valve timing	B
	Cooling system	Over-heating	A
9. Excessive engine oil consumption	Intake system	Loosened or cracked PCV hose	A
		Defective PCV valve	B
		Loosened oil filler cap	C
	Compression	Defective valve stem	A
		Worn or stuck piston rings, cylinder and piston	A
	Lubrication system	Loosened oil pump attaching bolts and defective gasket	B
		Defective oil filter O-ring	B
		Defective crankshaft oil seal	B
		Defective rocker cover gasket	B
		Loosened oil drain plug or defective gasket	B
		Loosened oil pan fitting bolts or defective oil pan	B
10. Excessive fuel consumption	Engine control system <Ref. to EN(H6DO)(diag)-2, Basic Diagnostic Procedure.>		A
	Intake system	Dirty air cleaner element	A
	Timing chain	Defective timing	B
	Compression	Incorrect valve clearance	B
		Loosened spark plug or defective gasket	C
		Loosened cylinder head bolt or defective gasket	C
		Improper valve sealing	B
		Defective valve stem	C
		Worn or broken valve spring	C
		Worn or stuck piston rings, cylinder and piston	B
		Incorrect valve timing	B
	Lubrication system	Incorrect oil pressure	C
	Cooling system	Over-cooling	C

GETtheMANUALS.org

27. Engine Noise

A: INSPECTION

Type of sound	Condition	Possible cause
Regular clicking sound	Sound increases as engine speed increases.	• Valve mechanism is defective. • Incorrect valve clearance • Worn camshaft • Broken valve spring • Trouble of valve lifter
Heavy and dull clank	Oil pressure is low.	• Worn camshaft main bearing • Worn connecting rod bearing (large end)
	Oil pressure is normal.	Damaged front mount
High-pitched clank	Sound is noticeable when accelerating with an overload condition.	• Ignition timing advanced • Accumulation of carbon inside combustion chamber • Wrong heat range of spark plug • Improper octane value gasoline
Clank when engine speed is between 1,000 and 2,000 rpm.	Noise is reduced when fuel injector connector of noisy cylinder is disconnected. *	• Worn crankshaft main bearing • Worn connecting rod bearing (large end)
Knocking sound when engine is operating under idling speed and engine is warm	Noise is reduced when fuel injector connector of noisy cylinder is disconnected. *	• Worn cylinder liner and piston ring • Broken or stuck piston ring • Worn piston pin and hole at piston end of connecting rod
	Sound is not reduced if each fuel injector connector is disconnected in turn. *	• Unusually worn valve lifter • Worn cam gear • Worn camshaft journal bore in cylinder head
Squeaky sound	—	Insufficient generator lubrication
Rubbing sound	—	Poor contact of generator brush and rotor
Gear scream when starting engine	—	• Defective ignition starter switch • Worn gear and starter pinion
Sound like polishing glass with a dry cloth	—	• V-belt • Defective water pump shaft
Hissing sound	—	• Insufficient compression • Air leakage in air intake system, hose, connection or manifold
Timing chain noise	—	• Loose timing chain • Timing chain contacting with adjacent part
Valve lifter noise	—	Incorrect valve clearance

* When disconnecting the fuel injector connector, the malfunction indicator light illuminates and DTC is stored in ECM memory. Therefore, perform the Clear Memory Mode <Ref. to EN(H6DO)(diag)-57, OPERATION, Clear Memory Mode.> and Inspection Mode <Ref. to EN(H6DO)(diag)-44, PROCEDURE, Inspection Mode.> after connecting the fuel injector connector.

GETtheMANUALS.org

EXHAUST

EX(H6DO)

		Page
1.	General Description	2
2.	Front Exhaust Pipe	5
3.	Rear Exhaust Pipe	8
4.	Muffler	10

GETtheMANUALS.org

1. General Description

A: COMPONENT

1. FRONT EXHAUST PIPE

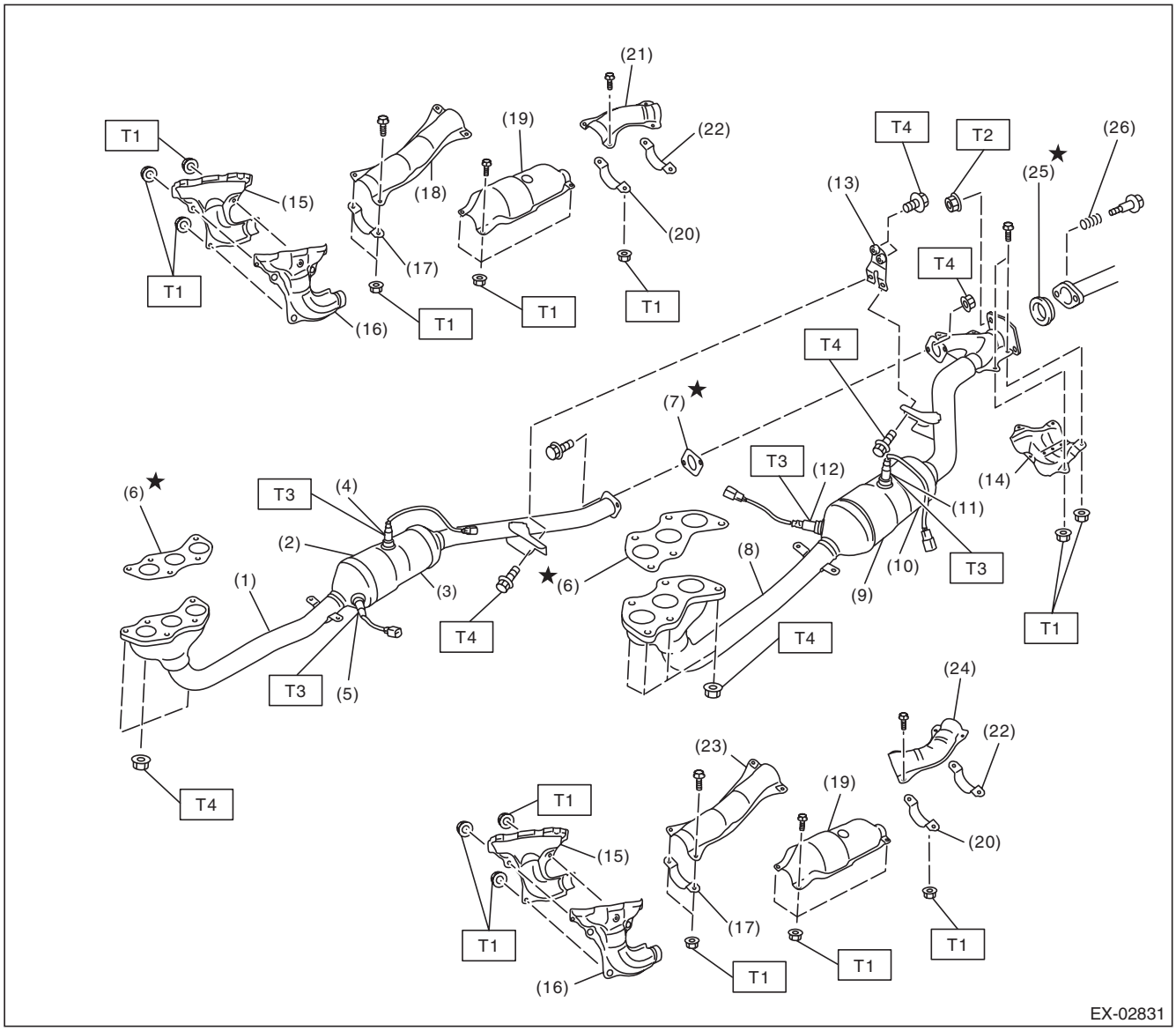

GETtheMANUALS.org

(1) Front exhaust pipe (RH)
(2) Front catalytic converter (RH)
(3) Rear catalytic converter (RH)
(4) Rear oxygen sensor (RH)
(5) Front oxygen sensor (RH)
(6) Gasket
(7) Gasket
(8) Front exhaust pipe (LH)
(9) Front catalytic converter (LH)
(10) Rear catalytic converter (LH)
(11) Rear oxygen sensor (LH)
(12) Front oxygen sensor (LH)
(13) Bracket
(14) Protector
(15) Front exhaust pipe cover (RH)
(16) Front exhaust pipe cover (LH)
(17) Clamp
(18) Front exhaust pipe upper cover (RH) (front)
(19) Catalytic converter upper cover
(20) Clamp
(21) Front exhaust pipe upper cover (RH) (rear)
(22) Clamp
(23) Front exhaust pipe upper cover (LH) (front)
(24) Front exhaust pipe upper cover (LH) (rear)
(25) Gasket
(26) Spring

Tightening torque:N·m (kgf-m, ft-lb)

T1: 13 (1.3, 9.6)
T2: 18 (1.8, 13.3)
T3: 21 (2.1, 15.5)
T4: 30 (3.1, 22.1)

2. REAR EXHAUST PIPE AND MUFFLER

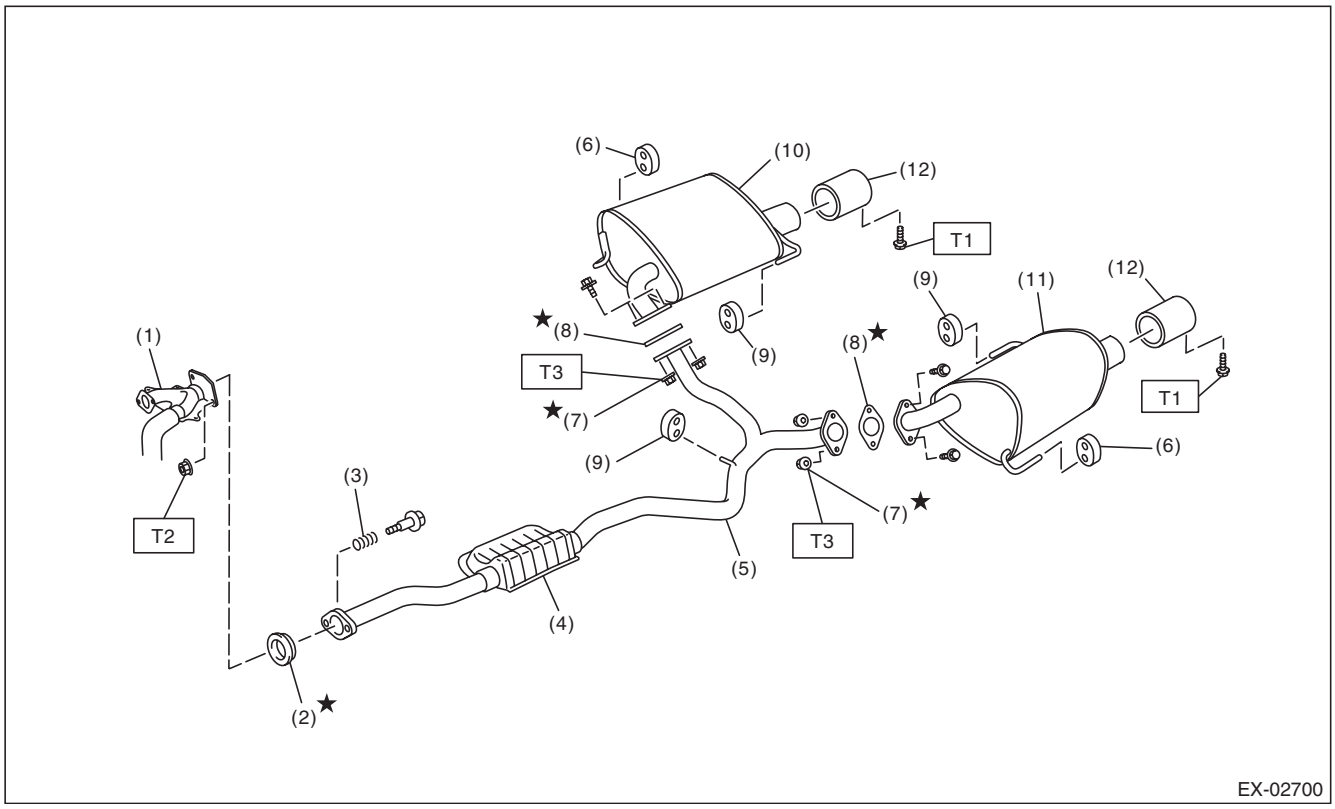

(1) Front exhaust pipe (LH)
(2) Gasket
(3) Spring
(4) Chamber
(5) Rear exhaust pipe
(6) Cushion rubber (with protrusion)
(7) Self-locking nut
(8) Gasket
(9) Cushion rubber (without protrusion)
(10) Muffler (RH)
(11) Muffler (LH)
(12) Muffler cutter

Tightening torque:N·m (kgf-m, ft-lb)

T1: 7.5 (0.8, 5.5)
T2: 18 (1.8, 13.3)
T3: 48 (4.9, 35.4)

GETtheMANUALS.org

B: CAUTION

- Wear appropriate work clothing, including a cap, protective goggles and protective shoes when performing any work.
- Remove contamination including dirt and corrosion before removal, installation or disassembly.
- Keep the disassembled parts in order and protect them from dust and dirt.
- Before removal, installation or disassembly, be sure to clarify the failure. Avoid unnecessary removal, installation, disassembly and replacement.
- Vehicle components are extremely hot after driving. Be wary of receiving burns from heated parts.
- Be sure to tighten fasteners including bolts and nuts to the specified torque.
- Place shop jacks or rigid racks at the specified points.
- Before disconnecting connectors of sensors or units, be sure to disconnect the ground cable from the battery.
- If any fat adheres to the exhaust pipe, wipe it off. Otherwise a fire may happen.

GETtheMANUALS.org

2. Front Exhaust Pipe

A: REMOVAL

CAUTION:
Vehicle components are extremely hot after driving. Be wary of receiving burns from heated parts.

1) Disconnect the ground cable from battery.
2) Lift up the vehicle.
3) Remove the under cover. <Ref. to EI-35, REMOVAL, Front Under Cover.>
4) Disconnect the front oxygen (A/F) sensor connector (A) and rear oxygen sensor connector (B).

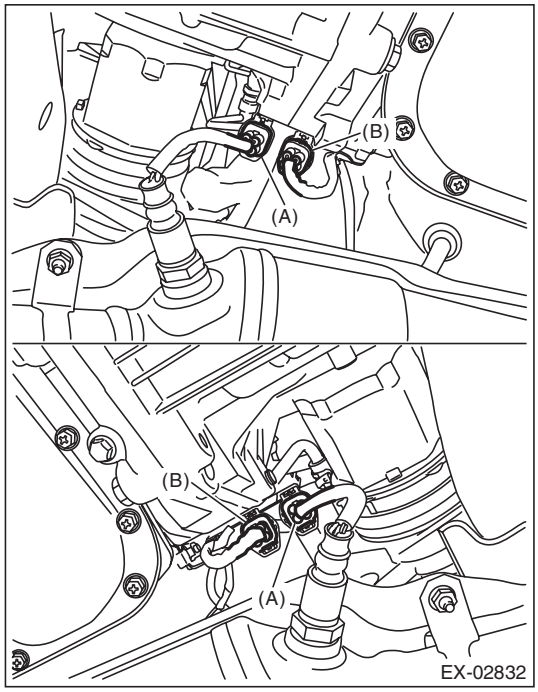

5) Remove the rear exhaust pipe from the front exhaust pipe assembly.

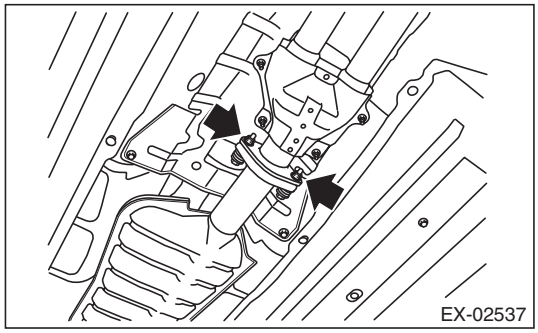

6) Remove the nuts which hold front exhaust pipe assembly onto cylinder heads.

CAUTION:
Be careful not to drop the front exhaust pipe assembly.

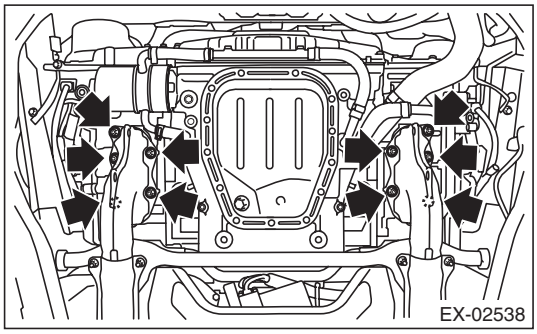

7) Remove the bolt which holds front exhaust pipe assembly to hanger bracket.

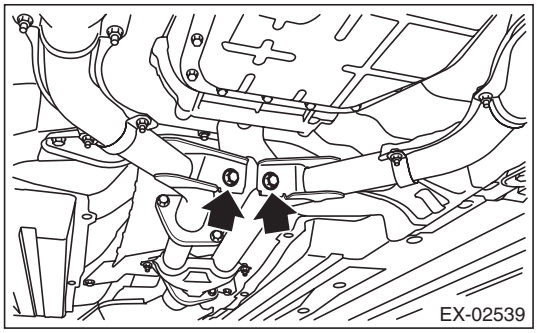

8) Remove the front exhaust pipe assembly.

CAUTION:
- **Be careful not to let the front exhaust pipe assembly fall off when removing, since it is very heavy.**
- **After removing the front exhaust pipe assembly, do not apply excessive pulling force on the rear exhaust pipe.**

9) Separate the front exhaust pipe (RH) from the front exhaust pipe (LH).

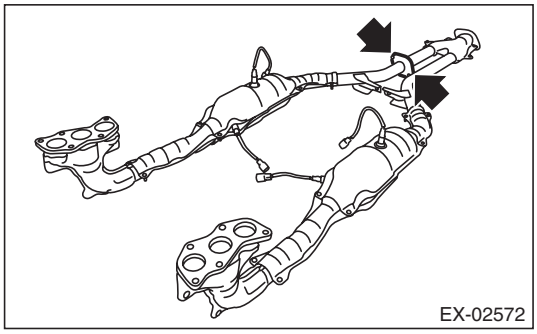

10) Remove the front oxygen (A/F) sensor and rear oxygen sensor. <Ref. to FU(H6DO)-50, REMOVAL, Front Oxygen (A/F) Sensor.> <Ref. to FU(H6DO)-52, REMOVAL, Rear Oxygen Sensor.>

GETtheMANUALS.org

B: INSTALLATION

1) Install the front oxygen (A/F) sensor and rear oxygen sensor. <Ref. to FU(H6DO)-50, INSTALLATION, Front Oxygen (A/F) Sensor.> <Ref. to FU(H6DO)-52, INSTALLATION, Rear Oxygen Sensor.>
2) Install the front exhaust pipe (RH) to the front exhaust pipe (LH).

NOTE:
Use a new gasket.

Tightening torque:
30 N·m (3.1 kgf-m, 22.1 ft-lb)

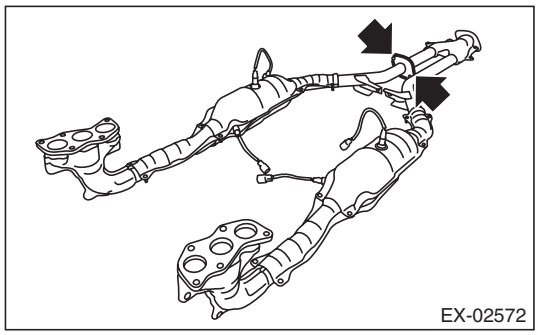

3) Install the front exhaust pipe assembly.

NOTE:
Use a new gasket.
4) Temporarily tighten the nuts which hold front exhaust pipe assembly to cylinder heads.

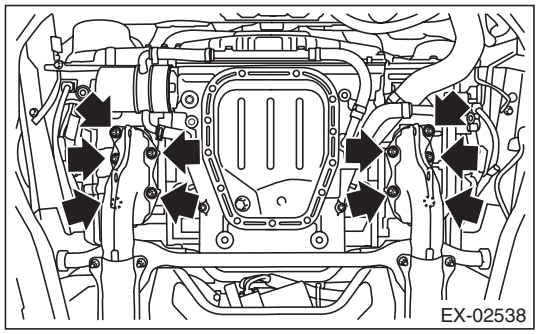

5) Install the front exhaust pipe assembly to the rear exhaust pipe.

NOTE:
Use a new gasket.

Tightening torque:
18 N·m (1.8 kgf-m, 13.3 ft-lb)

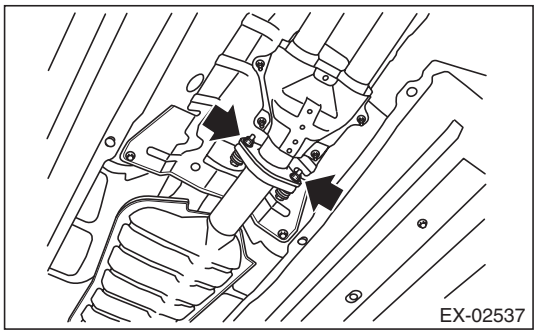

6) Tighten the bolts which hold front exhaust pipe assembly to hanger bracket.

Tightening torque:
30 N·m (3.1 kgf-m, 22.1 ft-lb)

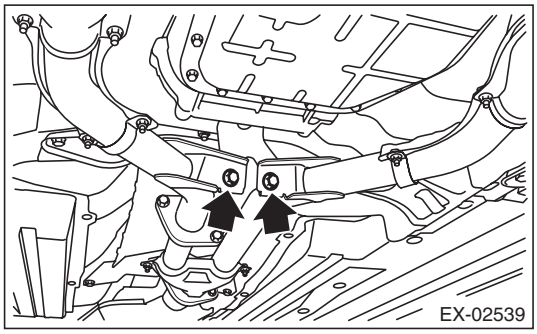

7) Tighten the nuts which hold the front exhaust pipe assembly to the cylinder heads in the numerical sequence as shown in the figure.

Tightening torque:
30 N·m (3.1 kgf-m, 22.1 ft-lb)

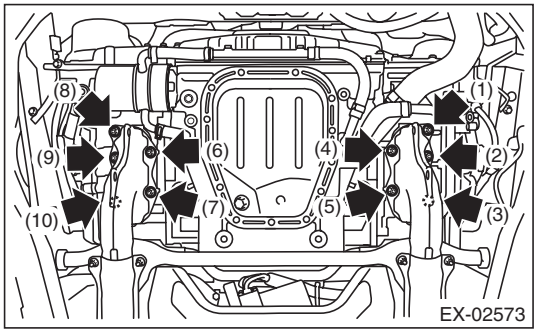

GETtheMANUALS.org

8) Connect the front oxygen (A/F) sensor connector (A) and rear oxygen sensor connector (B).

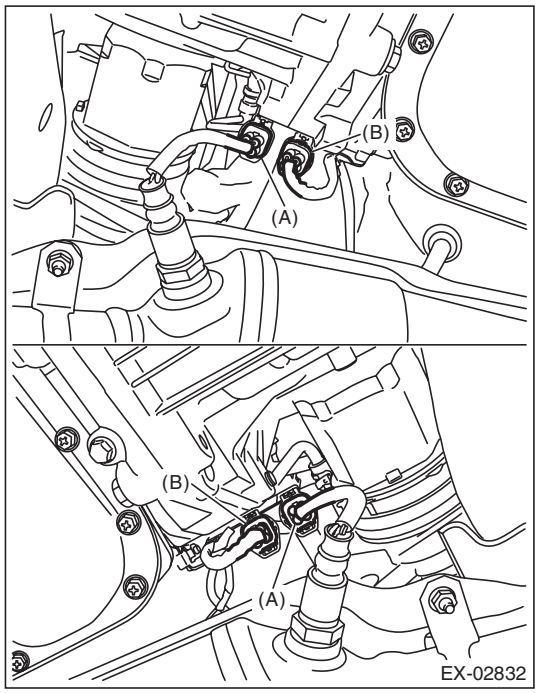

9) Install the under cover. <Ref. to EI-35, INSTALLATION, Front Under Cover.>
10) Lower the vehicle.
11) Connect the battery ground terminal.

C: INSPECTION

1) Check the connections and welds for exhaust leaks.
2) Make sure there are no holes or rusting.

GETtheMANUALS.org

3. Rear Exhaust Pipe

A: REMOVAL

CAUTION:
Vehicle components are extremely hot after driving. Be wary of receiving burns from heated parts.

1) Lift up the vehicle.
2) Remove the rear exhaust pipe from the front exhaust pipe assembly.

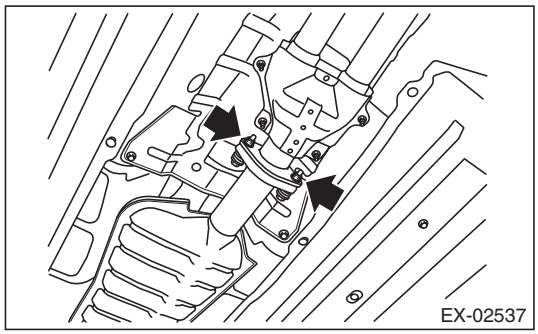

3) Remove the rear exhaust pipe from the muffler.

CAUTION:
Be careful not to drop the rear exhaust pipe.

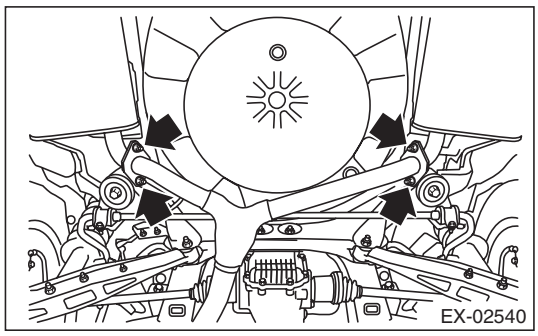

4) Apply a coat of spray type lubricant to the mating area of cushion rubber.
5) Remove the rear exhaust pipe from the cushion rubber.

CAUTION:
Be careful not to let the muffler contact the rear bumper.

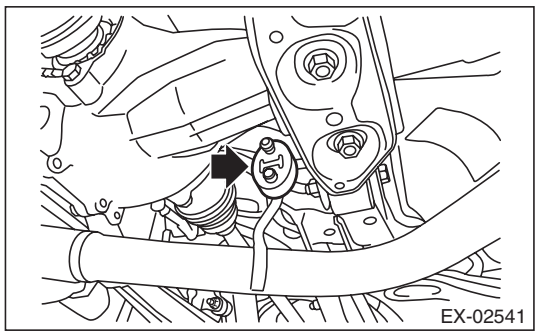

B: INSTALLATION

1) Apply a coat of spray type lubricant to the mating area of cushion rubber.
2) Install the rear exhaust pipe to the cushion rubber.

NOTE:
After assembling, degrease the lubricant which was applied to the cushion rubber while removing/installing.

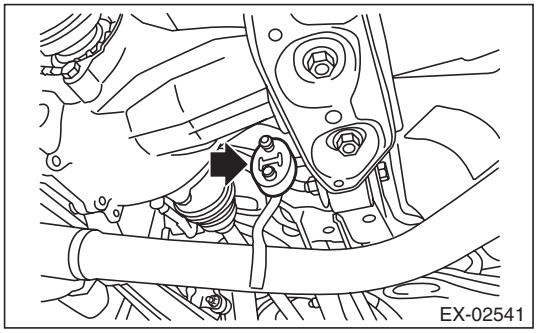

3) Install the rear exhaust pipe to the muffler.

NOTE:
Use a new gasket and self-locking nut.

Tightening torque:
48 N·m (4.9 kgf-m, 35.4 ft-lb)

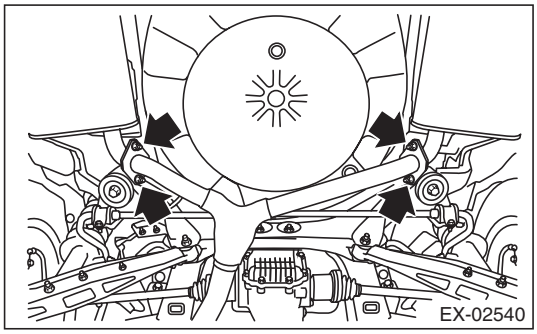

4) Install the rear exhaust pipe to the front exhaust pipe assembly.

NOTE:
Use a new gasket.

Tightening torque:
18 N·m (1.8 kgf-m, 13.3 ft-lb)

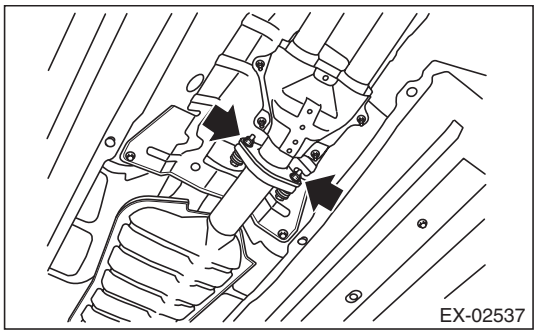

5) Lower the vehicle.

GETthemANUALS.org

C: INSPECTION

1) Check the connections and welds for exhaust leaks.
2) Make sure there are no holes or rusting.
3) Check the cushion rubber for wear or crack.

GETtheMANUALS.org

4. Muffler

A: REMOVAL

CAUTION:
Vehicle components are extremely hot after driving. Be wary of receiving burns from heated parts.

1) Lift up the vehicle.
2) Remove the muffler from rear exhaust pipe.

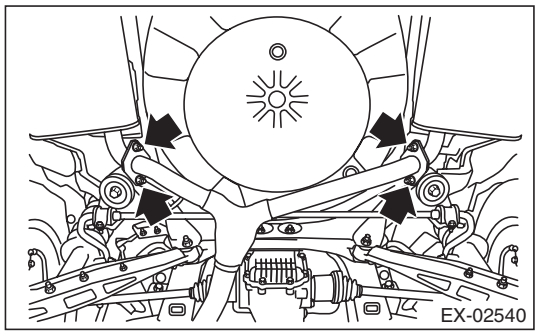

3) Apply a coat of spray type lubricant to the mating area of cushion rubber.
4) Remove the muffler from the cushion rubber.

CAUTION:
Be careful not to drop the muffler during removal.

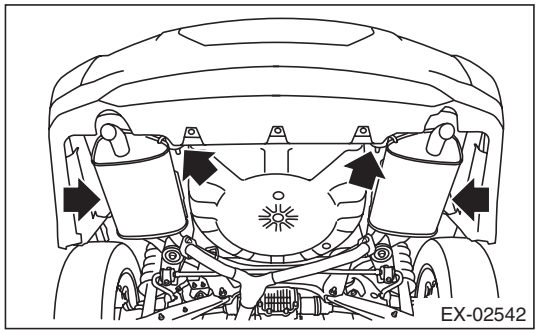

B: INSTALLATION

Install in the reverse order of removal.

NOTE:
- Use a new gasket and self-locking nut.
- After assembling, degrease the lubricant which was applied to the cushion rubber while removing/installing.

Tightening torque:
48 N·m (4.9 kgf-m, 35.4 ft-lb)

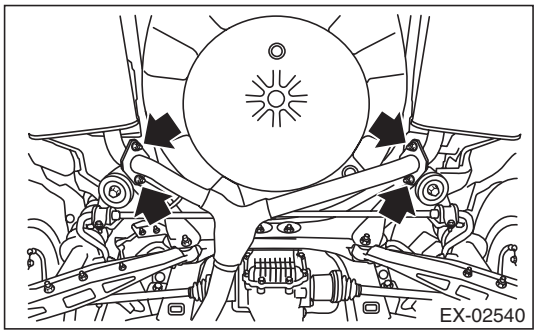

C: INSPECTION

1) Check the connections and welds for exhaust leaks.
2) Make sure there are no holes or rusting.
3) Check the cushion rubber for wear or crack.

GETthemANUALS.org

COOLING

CO(H6DO)

Page

1. General Description 2
2. Radiator Fan System 8
3. Engine Coolant 12
4. Water Pump 14
5. Thermostat 15
6. Radiator 17
7. Radiator Cap 20
8. Radiator Main Fan and Fan Motor 21
9. Radiator Sub Fan and Fan Motor 24
10. Reservoir Tank 25
11. Radiator Fan Control Unit 26
12. Engine Cooling System Trouble in General 27

GETtheMANUALS.org

1. General Description

A: SPECIFICATION

Cooling system					Electric fan + Forced engine coolant circulation system
Total engine coolant capacity				ℓ (US qt, Imp qt)	6.5 (6.9, 5.7)
Water pump	Type				Centrifugal impeller type
	Discharge performance	Discharge rate		ℓ (US gal, Imp gal) /min.	240 (63.4, 52.8)
		Pump speed — Discharge pressure			4,956 rpm — 140 kPa (14.0 mAq)
		Engine coolant temperature			80°C (176°F)
	Impeller diameter			mm (in)	66 (2.60)
	Number of impeller blades				8
	Pump sprocket outer diameter			mm (in)	60.60 (2.39)
Thermostat	Type				Wax pellet type
	Starting temperature to open				80 — 84°C (176 — 183°F)
	Fully opens				95°C (203°F)
	Valve lift			mm (in)	9.0 (0.354) or more
	Valve bore			mm (in)	35 (1.38)
Radiator fan	Motor input	Main fan		W	200
		Sub fan		W	200
	Fan diameter / Blade	Main fan			320 mm (12.6 in)/5
		Sub fan			320 mm (12.6 in)/7
Radiator	Type				Down flow, pressure type
	Core dimensions	Width × Height × Thickness		mm (in)	689.8 × 349.2 × 16 (27.16 × 13.75 × 0.63)
	Pressure range in which cap valve is open		Positive pressure side	Standard	93 — 123 (0.95 — 1.25, 14 — 18)
				Limit	83 (0.85, 12)
		kPa (kg/cm^2, psi)	Negative pressure side	Standard	–1.0 — –4.9 (–0.01 — –0.05, –0.1 — –0.7)
	Fins				Corrugated fin type
Reservoir tank	Capacity			ℓ (US qt, Imp qt)	0.45 (0.48, 0.40)

	Recommended materials	Item number	Alternative
Coolant	SUBARU SUPER COOLANT (Concentrated type)	—	—
	SUBARU SUPER COOLANT (Diluted type)	K0670Y0001	
Water for dilution	Distilled water	—	Soft water or tap water
Cooling system protective agent	Cooling system conditioner	SOA345001	—

GETtheMANUALS.org

B: COMPONENT

1. WATER PUMP AND WATER PIPE

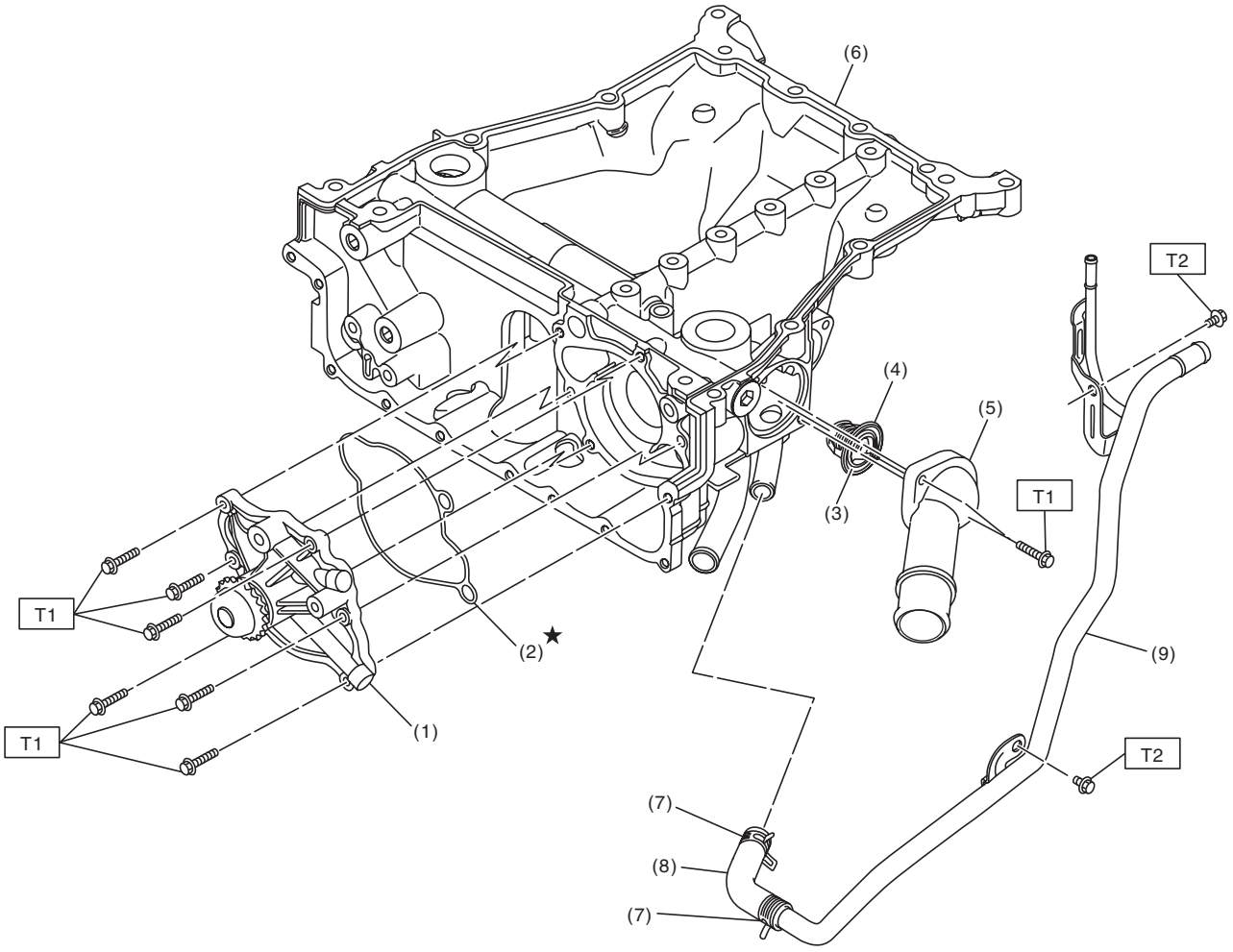

CO-02862

(1)	Water pump ASSY	(6)	Oil pan upper
(2)	O-ring	(7)	Clip
(3)	Thermostat	(8)	Hose
(4)	Gasket	(9)	Water return pipe
(5)	Thermostat cover		

Tightening torque:N·m (kgf-m, ft-lb)

T1: 6.4 (0.7, 4.7)

T2: 16 (1.6, 11.8)

GETtheMANUALS.org

2. ENGINE COOLANT TEMPERATURE SENSOR AND HEATER HOSE

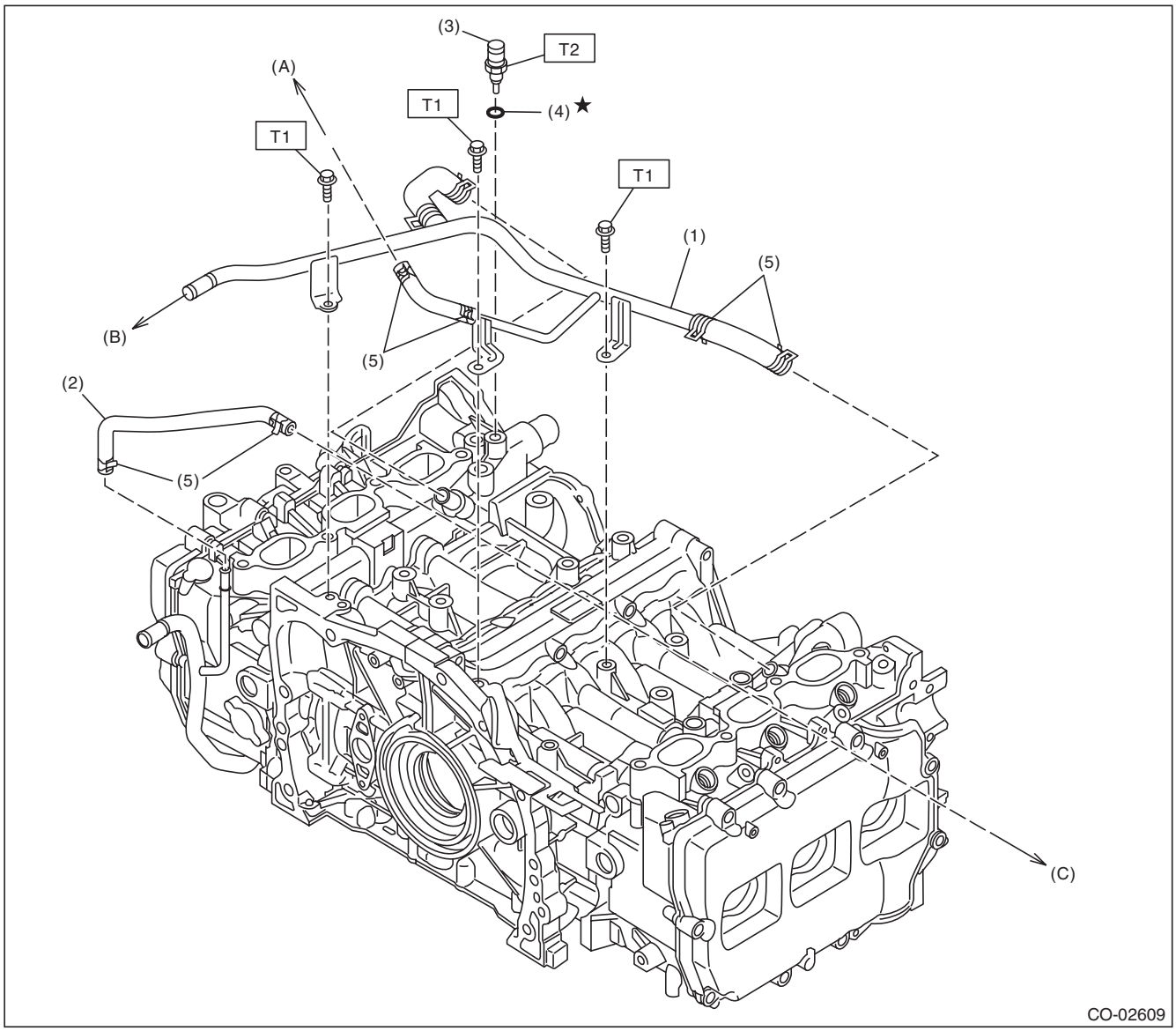

(A)	To the throttle body	(B)	To the heater hose on body side	(C)	To the throttle body
(1)	Heater pipe	(4)	Gasket		
(2)	Preheater hose	(5)	Clip		
(3)	Engine coolant temperature sensor				

Tightening torque:N·m (kgf-m, ft-lb)
T1: 19 (1.9, 14.0)
T2: 22 (2.2, 16.2)

GETtheMANUALS.org

3. RADIATOR AND RADIATOR FAN

- Radiator

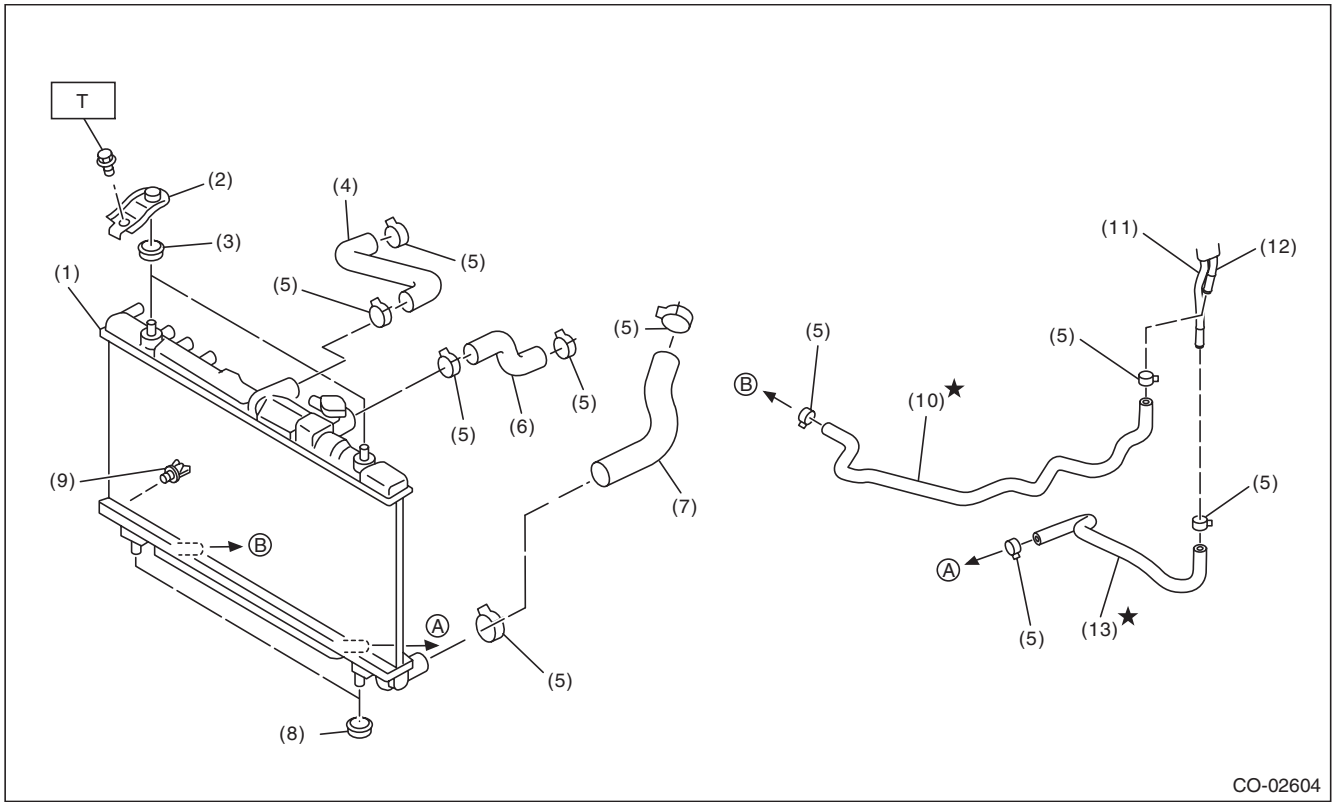

(1)	Radiator	(7)	Radiator outlet hose	(12)	ATF pipe A
(2)	Radiator upper bracket	(8)	Radiator lower cushion	(13)	ATF radiator outlet hose
(3)	Radiator upper cushion	(9)	Drain plug		
(4)	Radiator inlet hose RH	(10)	ATF radiator inlet hose		
(5)	Clip	(11)	ATF pipe B		
(6)	Radiator inlet hose LH				

Tightening torque:N·m (kgf-m, ft-lb)
T: 12 (1.2, 8.9)

GETtheMANUALS.org

- Radiator fan

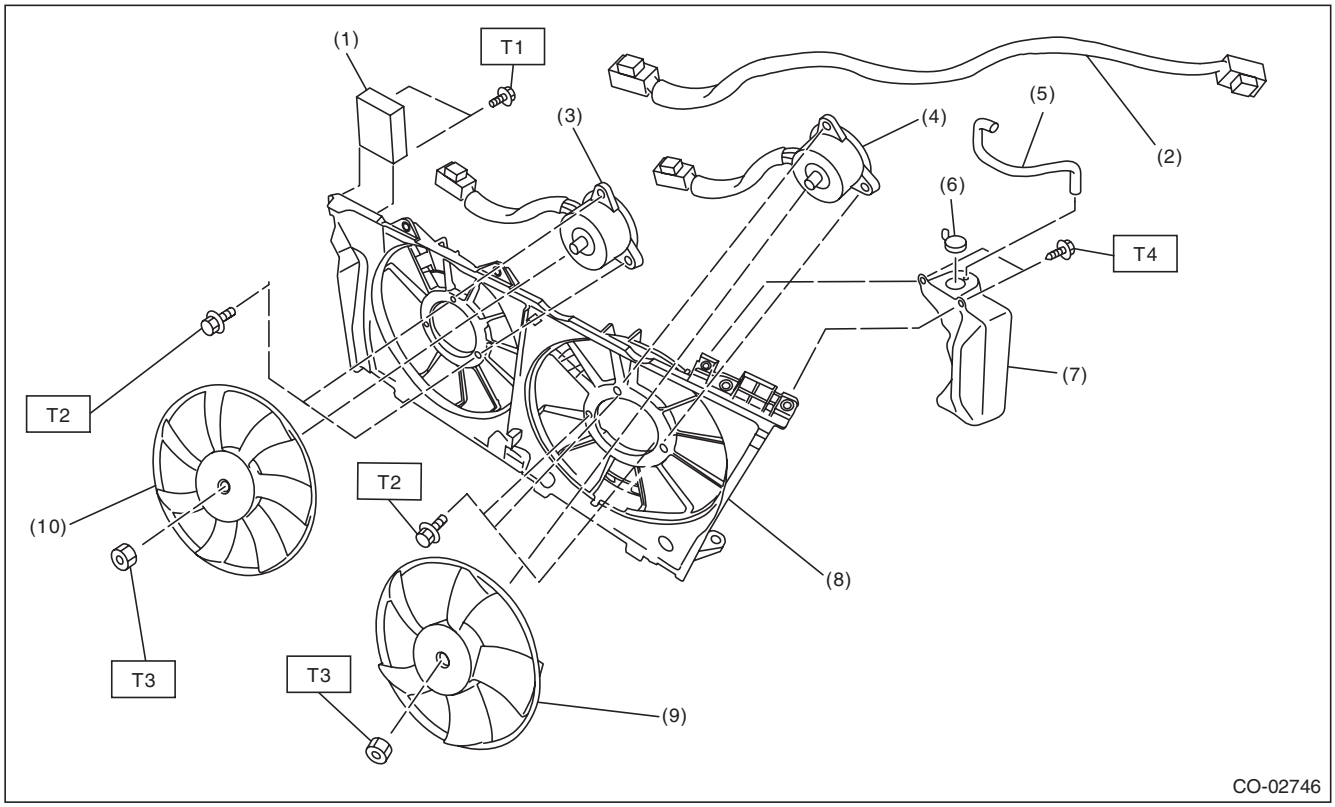

(1)	Radiator fan control unit	(6)	Reservoir tank cap
(2)	Radiator fan harness	(7)	Reservoir tank
(3)	Radiator sub fan motor	(8)	Radiator fan shroud
(4)	Radiator main fan motor	(9)	Radiator main fan
(5)	Over flow hose	(10)	Radiator sub fan

Tightening torque:N·m (kgf-m, ft-lb)	
T1:	***2.6 (0.3, 1.9)***
T2:	***3.8 (0.4, 2.8)***
T3:	***6.3 (0.6, 4.6)***
T4:	***7.5 (0.8, 5.5)***

GETtheMANUALS.org

C: CAUTION

- Wear appropriate work clothing, including a cap, protective goggles and protective shoes when performing any work.
- Remove contamination including dirt and corrosion before removal, installation or disassembly.
- Keep the disassembled parts in order and protect them from dust and dirt.
- Before removal, installation or disassembly, be sure to clarify the failure. Avoid unnecessary removal, installation, disassembly and replacement.
- Vehicle components are extremely hot after driving. Be wary of receiving burns from heated parts.
- Be sure to tighten fasteners including bolts and nuts to the specified torque.
- Place shop jacks or rigid racks at the specified points.
- Before disconnecting connectors of sensors or units, be sure to disconnect the ground cable from battery.
- Prepare a container and cloth to prevent scattering of engine coolant when performing work where engine coolant can be spilled. If the fuel spills, wipe it off immediately to prevent from penetrating into floor or flowing out for environmental protection.
- Follow all government and local regulations concerning disposal of refuse when disposing engine coolant.

D: PREPARATION TOOL

1. SPECIAL TOOL

ILLUSTRATION	TOOL NUMBER	DESCRIPTION	REMARKS
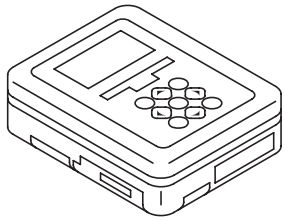 ST1B022XU0	1B022XU0	SUBARU SELECT MONITOR III KIT	Used for troubleshooting the electrical system.

2. GENERAL TOOL

TOOL NAME	REMARKS
Circuit tester	Used for measuring resistance and voltage.
Radiator cap tester	Used for checking radiator and radiator cap.

GETthemANUALS.org

2. Radiator Fan System

A: WIRING DIAGRAM

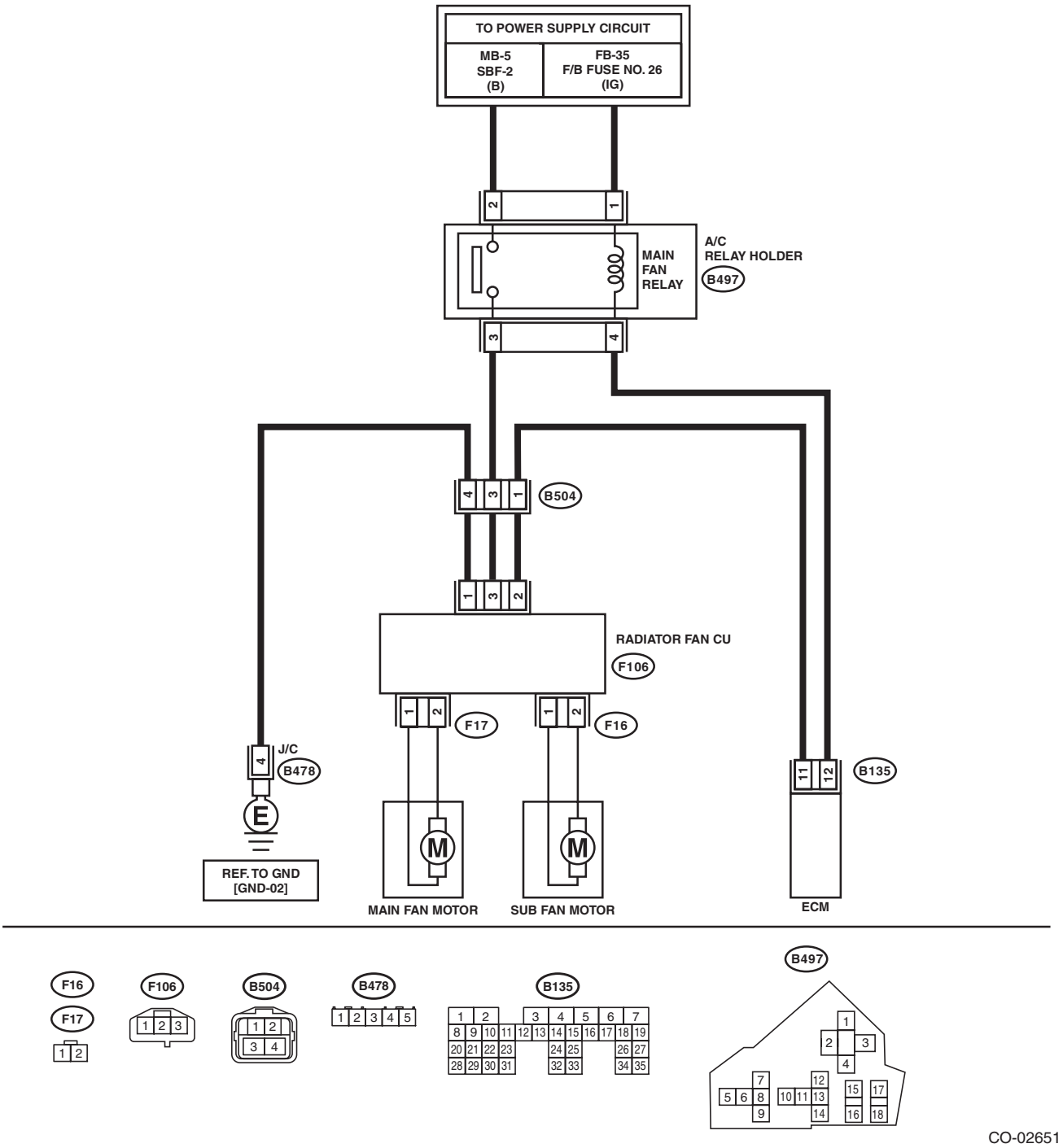

GETthemANUALS.org

B: RADIATOR FAN CONTROL OUTPUT WAVEFORM

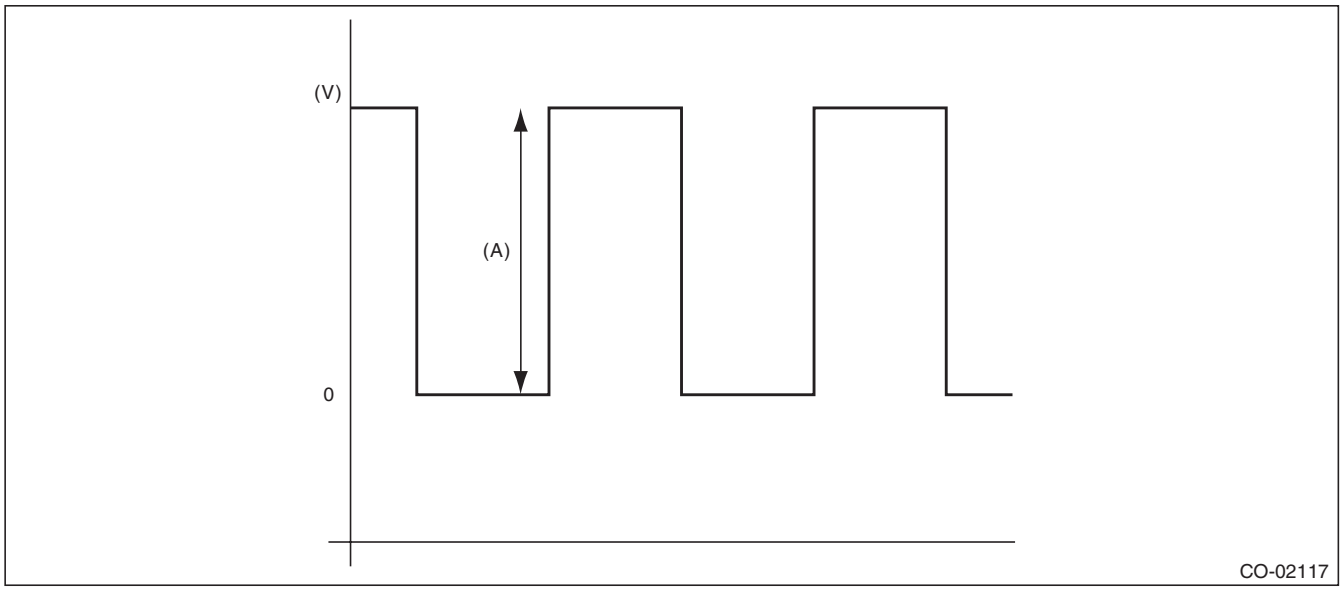

(A) 5 V

C: INSPECTION

Operating condition:

Radiator fan operates depending on the radiator fan speed related to engine coolant temperature or the radiator fan speed related to A/C compressor load, whichever is higher as a load condition.

- Radiator fan speed related to engine coolant temperature

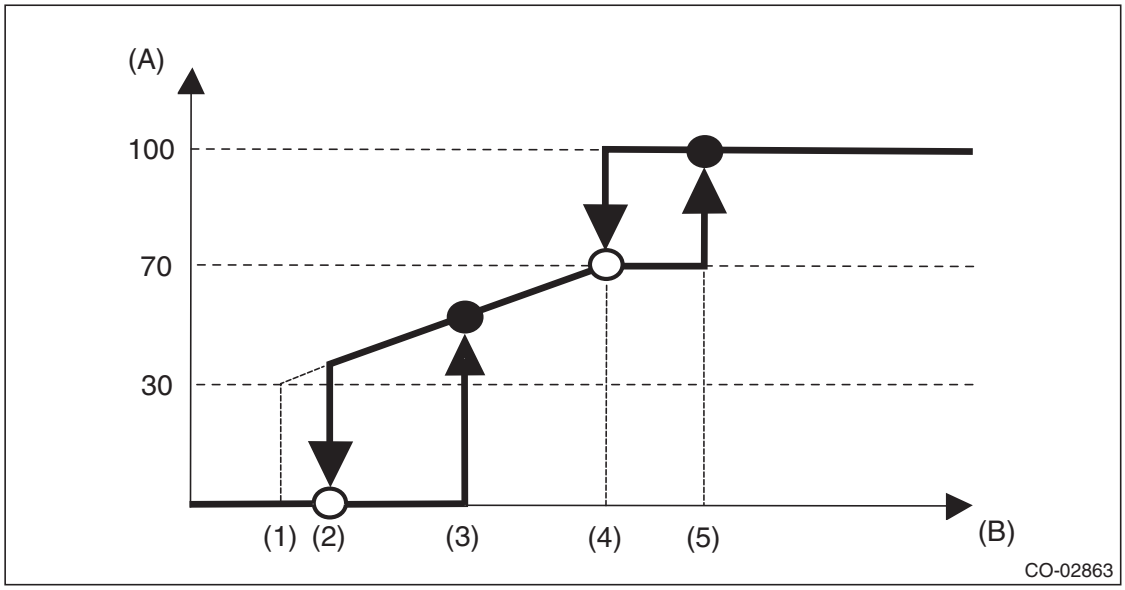

(A) Radiator fan speed (%)

(B) Engine coolant temperature

(1) 95°C (203°F)

(2) 96°C (205°F)

(3) 98°C (208°F)

(4) 100°C (212°F)

(5) 101°C (214°F)

GETthemANUALS.org

- Radiator fan speed related to A/C compressor load

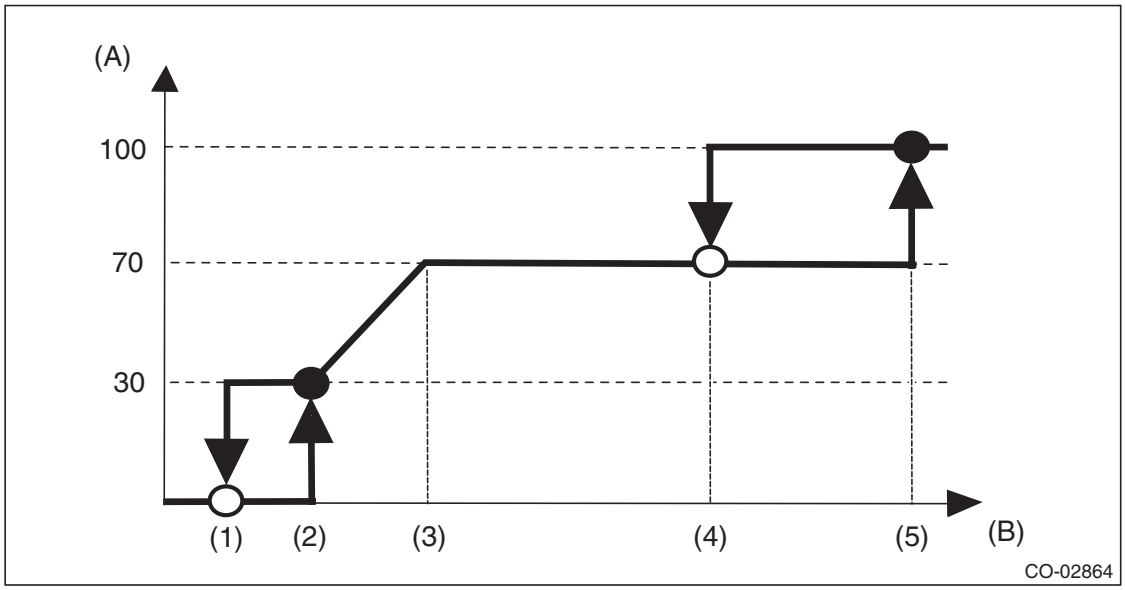

(A) Radiator fan speed (%)
(B) A/C compressor refrigerant pressure

(1) 0.8 MPa (8.16 kgf/cm^2, 116 psi)
(2) 1.0 MPa (10.20 kgf/cm^2, 145 psi)
(3) 1.5 MPa (15.30 kgf/cm^2, 218 psi)
(4) 4.0 MPa (40.79 kgf/cm^2, 580 psi)
(5) 5.0 MPa (50.98 kgf/cm^2, 725 psi)

DIAGNOSIS:
Radiator main and sub fans do not rotate under the above conditions.

Step		Check	Yes	No
1	**CHECK MAIN FAN RELAY.** 1) Turn the ignition switch to OFF. 2) Remove the main fan relay from the relay holder. 3) Measure the resistance between main fan relay switch terminals.	Is the resistance 1 MΩ or more?	Go to step **2**.	Replace the main fan relay.
2	**CHECK MAIN FAN RELAY.** 1) Connect the battery to the terminal on main fan relay coil side. 2) Measure the resistance between main fan relay switch terminals.	Is the resistance less than 1 Ω?	Go to step **3**.	Replace the main fan relay.
3	**CHECK POWER SUPPLY FOR ECM.** 1) Turn the ignition switch to OFF. 2) Disconnect the connector from ECM. 3) Turn the ignition switch to ON. 4) Measure the voltage between ECM terminal and chassis ground. ***Connector & terminal*** ***(B135) No. 12 (+) — Chassis ground (–):***	Is the voltage 10 V or more?	Go to step **4**.	Repair the power supply line.

GETthemANUALS.org

	Step	Check	Yes	No
4	**CHECK POWER SUPPLY FOR RADIATOR FAN CONTROL UNIT.** 1) Turn the ignition switch to OFF. 2) Connect the connector to ECM. 3) Disconnect the connector from radiator fan control unit. 4) Turn the ignition switch to ON. 5) Measure the voltage between radiator fan control unit terminal and chassis ground. ***Connector & terminal*** ***(F106) No. 3 (+) — Chassis ground (–):***	Is the voltage 10 V or more?	Go to step **5**.	Repair the power supply line.
5	**CHECK HARNESS BETWEEN ECM AND RADIATOR FAN CONTROL UNIT.** 1) Turn the ignition switch to OFF. 2) Disconnect the connector from ECM. 3) Measure the resistance between radiator fan control unit and ECM connector. ***Connector & terminal*** ***(B135) No. 11 — (F106) No. 2:***	Is the resistance less than 1 Ω?	Go to step **6**.	Repair the open circuit of harness between ECM and radiator fan control unit.
6	**CHECK GROUND CIRCUIT FOR RADIATOR FAN CONTROL UNIT.** 1) Connect the connector to ECM and radiator fan control unit. 2) Measure the resistance between radiator fan control unit connector and chassis ground. ***Connector & terminal*** ***(F106) No. 1 — Chassis ground:***	Is the resistance less than 5 Ω?	Go to step **7**.	Repair the open circuit of harness between radiator fan control unit connector and chassis ground.
7	**CHECK MAIN FAN MOTOR.** 1) Disconnect the connector from radiator fan control unit. 2) Connect the battery positive (+) terminal to terminal No. 1 of the main fan motor, and the ground (–) terminal to terminal No. 2.	Does the main fan motor rotate?	Go to step **8**.	Replace the main fan motor.
8	**CHECK SUB FAN MOTOR.** 1) Disconnect the connector from radiator fan control unit. 2) Connect the battery positive (+) terminal to terminal No. 1 of the sub fan motor, and the ground (–) terminal to terminal No. 2.	Does the sub fan motor rotate?	Go to step **9**.	Replace the sub fan motor.
9	**CHECK OUTPUT SIGNAL FROM ECM.** 1) Turn the ignition switch to OFF. 2) Connect the delivery mode fuse. 3) Turn the ignition switch to ON. 4) Check the output waveform using oscilloscope. <Ref. to CO(H6DO)-9, RADIATOR FAN CONTROL OUTPUT WAVEFORM, Radiator Fan System.> ***Connector & terminal*** ***(B135) No. 11 (+) — Chassis ground (–):***	Is waveform being output?	Replace the radiator fan control unit. <Ref. to CO(H6DO)-26, Radiator Fan Control Unit.>	Replace the ECM. <Ref. to FU(H6DO)-54, Engine Control Module (ECM).>

GETtheMANUALS.org

3. Engine Coolant

A: REPLACEMENT

1. DRAINING OF ENGINE COOLANT

1) Lift up the vehicle.
2) Remove the under cover. <Ref. to EI-35, REMOVAL, Front Under Cover.>
3) Remove the drain plug to drain engine coolant into container.

NOTE:
Remove the radiator cap so that engine coolant will drain faster.

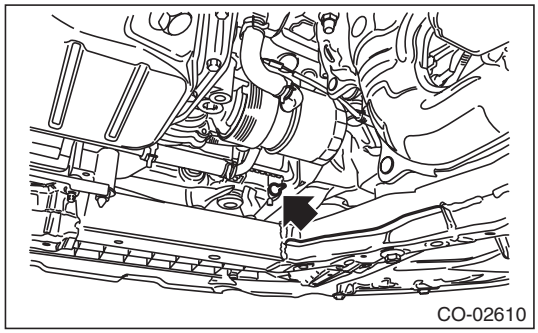

4) Install the drain plug.
5) Install the under cover. <Ref. to EI-35, INSTALLATION, Front Under Cover.>

2. FILLING OF ENGINE COOLANT

1) Pour cooling system conditioner from the filler neck of the radiator.

Cooling system protective agent:
Refer to "SPECIFICATION" for cooling system protective agent. <Ref. to CO(H6DO)-2, SPECIFICATION, General Description.>

2) Pour engine coolant into the radiator up to the filler neck position.

Recommended engine coolant:
Refer to "SPECIFICATION" for recommended engine coolant. <Ref. to CO(H6DO)-2, SPECIFICATION, General Description.>

Engine coolant level:
Refer to "SPECIFICATION" for engine coolant level. <Ref. to CO(H6DO)-2, SPECIFICATION, General Description.>

Engine coolant concentration:
Refer to "ADJUSTMENT" for the recommended engine coolant concentration. <Ref. to CO(H6DO)-13, ADJUSTMENT, Engine Coolant.>

NOTE:
The SUBARU Super Coolant contains anti-freeze and anti-rust agents, and is especially made for Subaru engines with an aluminum cylinder block. Always use SUBARU Super Coolant, since other coolant may cause corrosion.

3) Fill engine coolant into the reservoir tank up to "FULL" level.

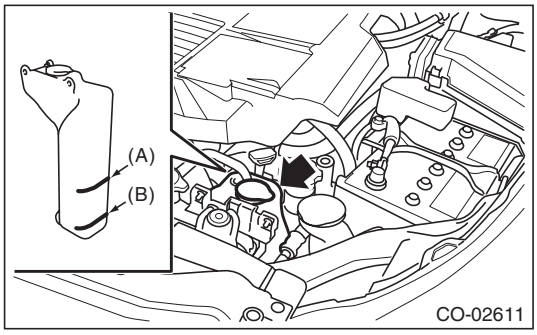

(A) FULL
(B) LOW

4) Close the radiator cap and start the engine. Race 5 to 6 times at 3,000 rpm or less, then stop the engine. (Complete this operation within 40 seconds.)
5) Wait for one minute after the engine stops, and open the radiator cap. If the engine coolant level drops, add engine coolant into radiator up to the filler neck position.
6) Perform the procedures 4) and 5) again.
7) Attach the radiator cap and reservoir tank cap properly.
8) Start the engine and operate the heater at maximum hot position and the blower speed setting to "LO".
9) Run the engine at 2,000 rpm or less until radiator fan starts and stops.

NOTE:
Be careful with the engine coolant temperature to prevent overheating.

10) Stop the engine and wait until the engine coolant temperature lowers to 30°C (86°F) or less.
11) Open the radiator cap. If the engine coolant level drops, add engine coolant into the radiator up to the filler neck position and the reservoir tank to "FULL" level.
12) Attach the radiator cap and reservoir tank cap properly.
13) Set the heater setting to maximum hot position and the blower speed setting to "LO" and start the engine. Perform racing at 3,000 rpm or less. If the flowing sound is heard from the heater core, repeat the procedures from step 9).

GETtheMANUALS.org

B: ADJUSTMENT

1. PROCEDURE TO ADJUST THE SUBARU SUPER COOLANT CONCENTRATION

CAUTION:
Use the SUBARU Super Coolant with a 50 — 60% concentration in order to obtain maximum anti-freeze and anti-rust performance.
To adjust the concentration of SUBARU Super Coolant according to temperature, find the proper SUBARU Super Coolant concentration in the table, and add diluting water to the SUBARU Super Coolant (concentrated type) until it reaches the proper dilution.

Relationship of Subaru Super Coolant concentration and freezing temperature			
SUBARU Super Coolant concentration	50%	55%	60%
Freezing temperature	–36°C (–33°F)	–41°C (–42°F)	–50°C (–58°F)

Engine coolant and diluting water:
Refer to "SPECIFICATION" for the recommended engine coolant and diluting water. <Ref. to CO(H6DO)-2, SPECIFICATION, General Description.>

GETtheMANUALS.org

4. Water Pump

A: REMOVAL

1) Remove the radiator. <Ref. to CO(H6DO)-17, REMOVAL, Radiator.>
2) Remove the V-belts. <Ref. to ME(H6DO)-51, REMOVAL, V-belt.>
3) Remove the crank pulley. <Ref. to ME(H6DO)-52, REMOVAL, Crank Pulley.>
4) Remove the chain cover. <Ref. to ME(H6DO)-53, REMOVAL, Chain Cover.>
5) Remove the timing chain assembly. <Ref. to ME(H6DO)-63, REMOVAL, Timing Chain Assembly.>
6) Remove the water pump from the oil pan upper.

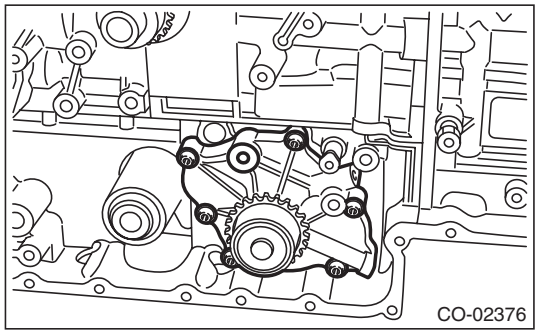

B: INSTALLATION

1) Tighten the bolts in the numerical order as shown in the figure, and install water pump to the oil pan upper.

NOTE:
Use new O-rings.

Tightening torque:
6.4 N·m (0.7 kgf-m, 4.7 ft-lb)

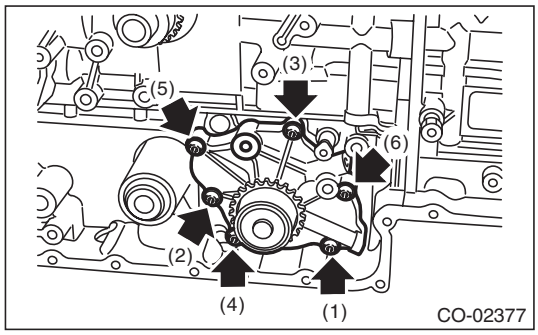

2) Install the timing chain assembly. <Ref. to ME(H6DO)-69, INSTALLATION, Timing Chain Assembly.>
3) Install the chain cover. <Ref. to ME(H6DO)-56, INSTALLATION, Chain Cover.>
4) Install the crank pulley. <Ref. to ME(H6DO)-52, INSTALLATION, Crank Pulley.>
5) Install the V-belts. <Ref. to ME(H6DO)-51, INSTALLATION, V-belt.>
6) Install the radiator. <Ref. to CO(H6DO)-18, INSTALLATION, Radiator.>
7) Fill engine coolant. <Ref. to CO(H6DO)-12, FILLING OF ENGINE COOLANT, REPLACEMENT, Engine Coolant.>

C: INSPECTION

1) Check the water pump bearing for smooth rotation.
2) Check the water pump sprocket for abnormalities.
3) Make sure the impeller is not abnormally deformed or damaged.
4) After water pump installation, check pulley shaft for engine coolant leaks or noise. If leaks or noise are noted, replace the water pump assembly.

GETtheMANUALS.org

5. Thermostat

A: REMOVAL

1) Lift up the vehicle.
2) Remove the under cover. <Ref. to EI-35, REMOVAL, Front Under Cover.>
3) Drain engine coolant. <Ref. to CO(H6DO)-12, DRAINING OF ENGINE COOLANT, REPLACEMENT, Engine Coolant.>
4) Remove the radiator outlet hose from the radiator lower and the thermostat cover.

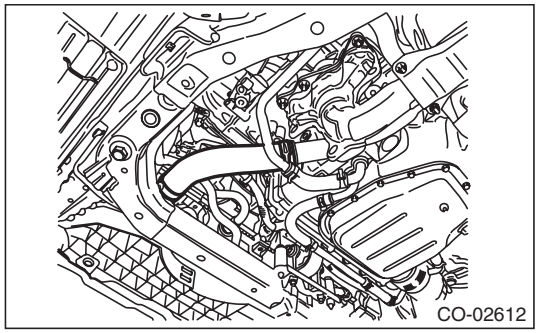

5) Remove the thermostat cover, and then remove the thermostat.

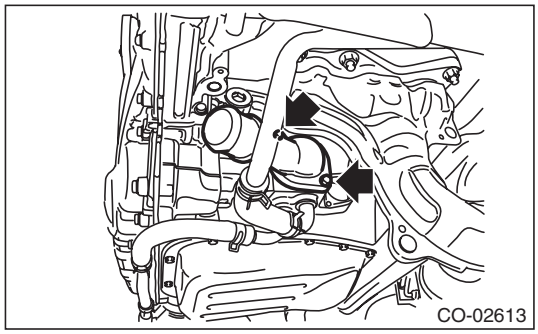

B: INSTALLATION

1) Install a gasket to thermostat.

NOTE:
Use a new gasket.

2) Install the thermostat and thermostat cover.

NOTE:
Install the parts with the jiggle pin facing the upside.

Tightening torque:
6.4 N·m (0.7 kgf-m, 4.7 ft-lb)

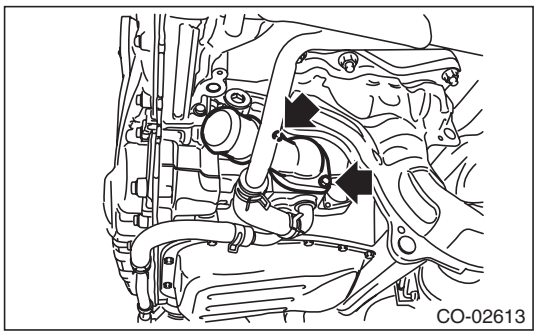

3) Install the radiator outlet hose to the radiator lower and the thermostat cover.

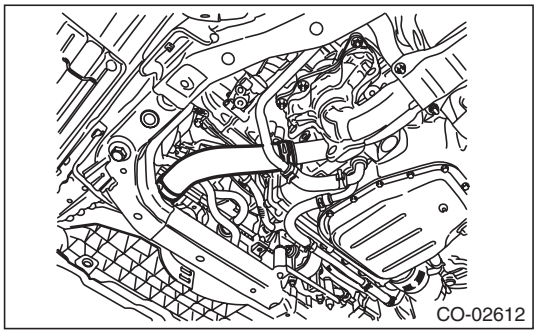

4) Install the under cover. <Ref. to EI-35, INSTALLATION, Front Under Cover.>
5) Lower the vehicle.
6) Fill engine coolant. <Ref. to CO(H6DO)-12, FILLING OF ENGINE COOLANT, REPLACEMENT, Engine Coolant.>

GETtheMANUALS.org

C: INSPECTION

1) Check that the thermostat does not have deformation, cracks or damage.
2) Check that the thermostat valve closes completely at an ambient temperature.
3) Immerse the thermostat and a thermometer in water. Raise water temperature gradually, and check the temperature and valve lift when the valve begins to open and when the valve is fully opened. Replace the thermostat if faulty.

NOTE:
- During the test, agitate the water for even temperature distribution.
- Leave the thermostat in the boiling water for five minutes or more before measuring the valve lift.
- Hold the thermostat with a wire or the like to avoid contacting the container.

Starting temperature to open:
80 — 84°C (176 — 183°F)

Full open temperature:
95°C (203°F)

Total valve lift:
9.0 mm (0.354 in) or more

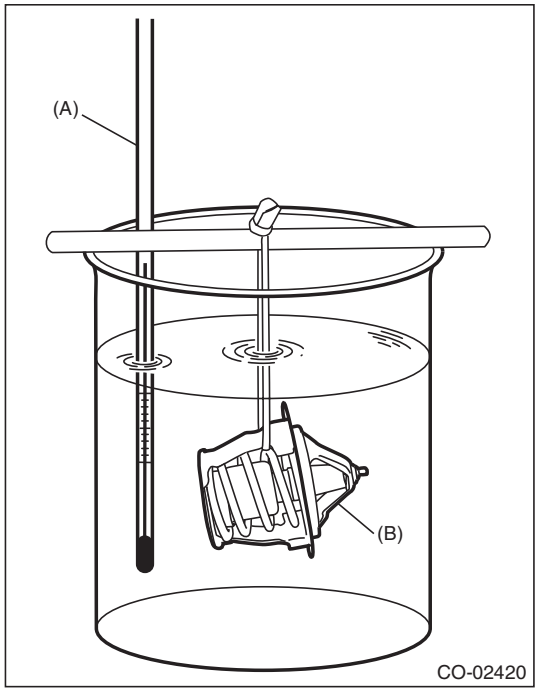

(A) Thermometer
(B) Thermostat

GETtheMANUALS.org

6. Radiator

A: REMOVAL

CAUTION:
The radiator is pressurized when the engine and radiator are hot. Wait until engine and radiator cool down before working on the radiator.

1) Remove the collector cover.

NOTE:
Follow the steps below when removing the collector cover.
(1) Pull up the two points at the rear (A).
(2) Pull up the two points at the front (B) while moving them forward.

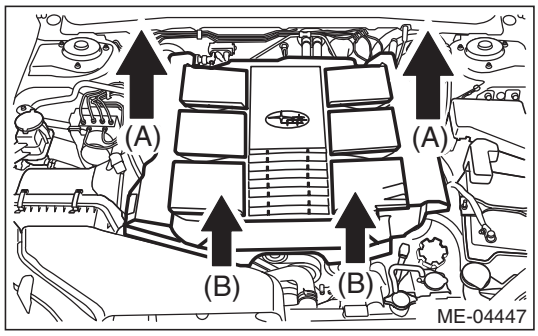

2) Disconnect the ground cable from battery.
3) Lift up the vehicle.
4) Remove the under cover. <Ref. to EI-35, REMOVAL, Front Under Cover.>
5) Drain engine coolant. <Ref. to CO(H6DO)-12, DRAINING OF ENGINE COOLANT, REPLACEMENT, Engine Coolant.>
6) Disconnect the integrated connector of radiator main fan & fan motor and radiator sub fan & fan motor.

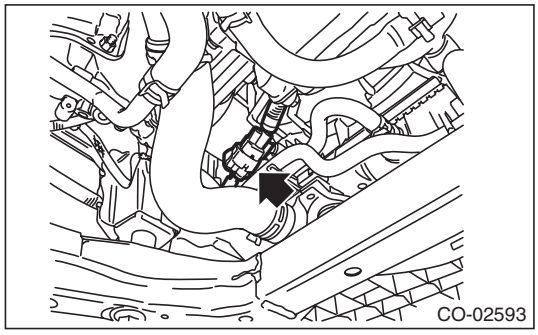

7) Disconnect the radiator outlet hose from radiator lower.

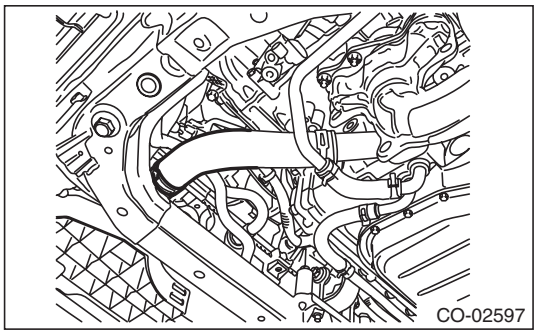

8) Lower the vehicle.
9) Remove the air intake duct. <Ref. to IN(H6DO)-8, REMOVAL, Air Intake Duct.>
10) Remove the grille bracket.

NOTE:
Remove ten clips when removing the grille bracket.

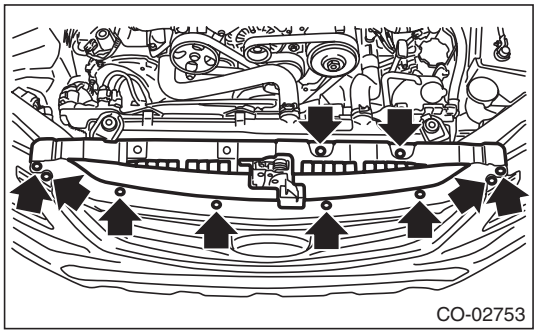

11) Remove the radiator main fan & fan motor and radiator sub fan & fan motor. <Ref. to CO(H6DO)-21, REMOVAL, Radiator Main Fan and Fan Motor.> <Ref. to CO(H6DO)-24, REMOVAL, Radiator Sub Fan and Fan Motor.>
12) Disconnect the ATF radiator inlet hose and outlet hose from the radiator.

NOTE:
Plug the ATF radiator inlet hose and outlet hose to prevent ATF from leaking.

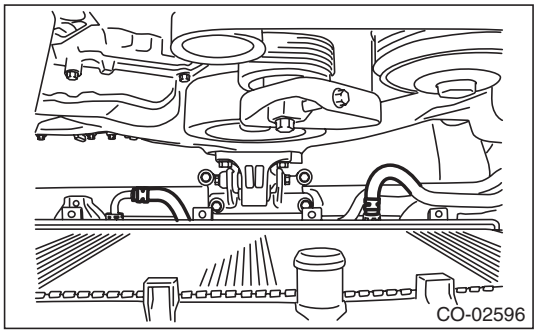

GETtheMANUALS.org

13) Remove the radiator upper brackets.

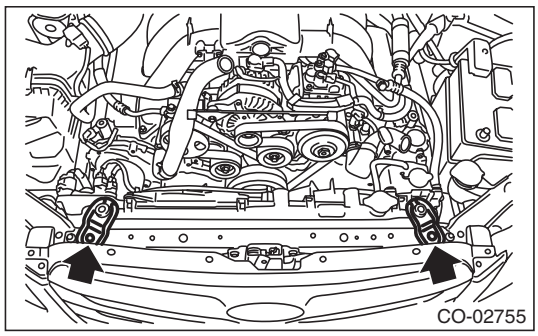

14) Lift the radiator up and away from vehicle.
15) Remove the radiator lower cushion.

B: INSTALLATION

1) Install the radiator lower cushion.
2) Install the radiator to vehicle.

NOTE:
Insert pins on the lower side of radiator into the radiator lower cushions on vehicle side.
3) Install the radiator upper brackets.

Tightening torque:
12 N·m (1.2 kgf-m, 8.9 ft-lb)

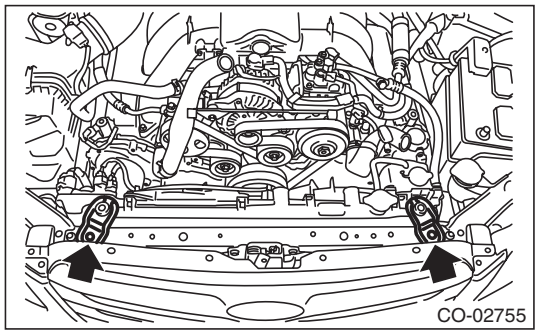

4) Connect the ATF radiator inlet hose and outlet hose.

NOTE:
Use new ATF radiator inlet hose and outlet hose.

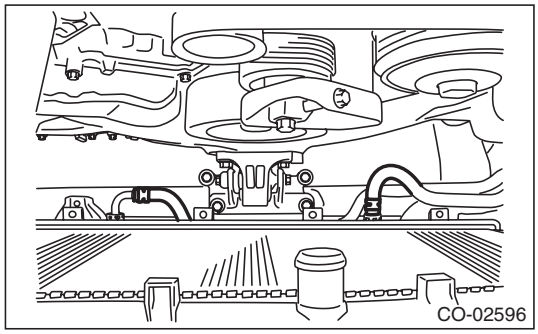

5) Install the radiator main fan & fan motor and radiator sub fan & fan motor. <Ref. to CO(H6DO)-22, INSTALLATION, Radiator Main Fan and Fan Motor.> <Ref. to CO(H6DO)-24, INSTALLATION, Radiator Sub Fan and Fan Motor.>

6) Attach the grille bracket.

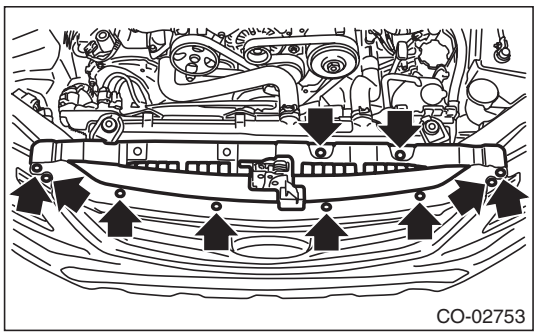

7) Lift up the vehicle.
8) Connect the radiator outlet hose to the radiator lower.

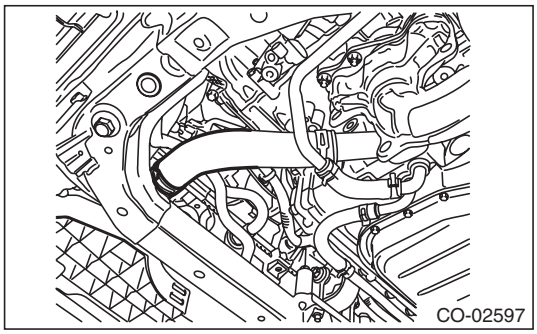

9) Connect the integrated connector of radiator main fan & fan motor and radiator sub fan & fan motor.

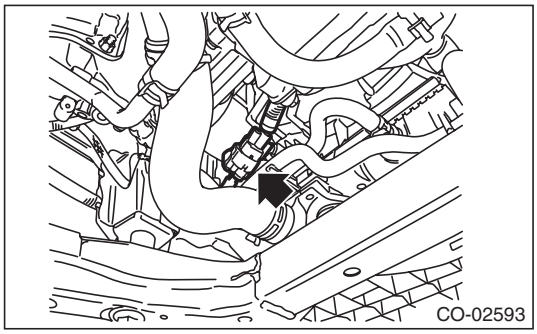

10) Install the under cover. <Ref. to EI-35, INSTALLATION, Front Under Cover.>
11) Lower the vehicle.
12) Connect the battery ground terminal.
13) Fill engine coolant. <Ref. to CO(H6DO)-12, FILLING OF ENGINE COOLANT, REPLACEMENT, Engine Coolant.>
14) Check the ATF level and replenish it if necessary. <Ref. to 5AT-29, INSPECTION, Automatic Transmission Fluid.>
15) Install the air intake duct. <Ref. to IN(H6DO)-8, INSTALLATION, Air Intake Duct.>
16) Install the collector cover.

GETtheMANUALS.org

C: INSPECTION

1) Check that the radiator does not have deformation, cracks or damage.
2) Check that the hose has no cracks, damage or loose part.
3) Remove the radiator cap, fill the radiator with engine coolant, and then install the radiator cap tester to the filler neck of radiator.
4) Apply a pressure of 157 kPa (1.6 kgf/cm^2, 23 psi) to the radiator, and check the following items.
- Leakage from the radiator or its vicinity
- Leakage from the hose or its connections

CAUTION:
- **Engine should be turned off.**
- **Wipe engine coolant from check points in advance.**
- **Be careful not to deform the filler neck of the radiator when installing and removing the radiator cap tester.**
- **Be careful of engine coolant from spurting out when removing the radiator cap tester.**

GETtheMANUALS.org

7. Radiator Cap

A: INSPECTION

1) Check that the radiator cap does not have deformation, cracks or damage.
2) Attach the radiator cap tester to radiator cap.

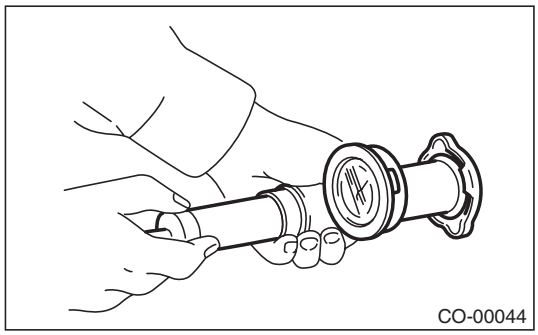

3) Increase pressure until the radiator cap tester gauge needle stops. Radiator cap is functioning properly if it holds the service limit pressure for 5 — 6 seconds. Replace the radiator cap if its valve opens at less than the service limit.

Standard:
93 — 123 kPa (0.95 — 1.25 kgf/cm^2, 14 — 18 psi)

Service limit:
83 kPa (0.85 kgf/cm^2, 12 psi)

CAUTION:
Be sure to remove foreign matter and rust from the cap in advance. Otherwise, results of pressure test will be incorrect.

GETtheMANUALS.org

8. Radiator Main Fan and Fan Motor

A: REMOVAL

1) Remove the collector cover.

NOTE:
Follow the steps below when removing the collector cover.
(1) Pull up the two points at the rear (A).
(2) Pull up the two points at the front (B) while moving them forward.

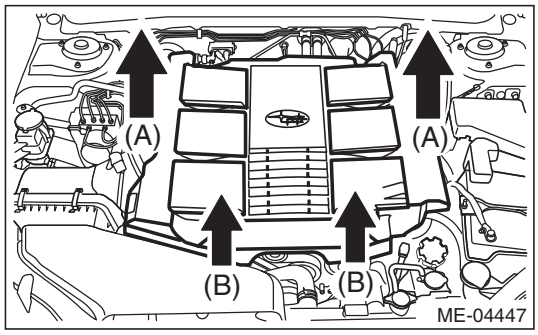

2) Disconnect the ground cable from battery.
3) Lift up the vehicle.
4) Remove the under cover. <Ref. to EI-35, REMOVAL, Front Under Cover.>
5) Drain engine coolant. <Ref. to CO(H6DO)-12, DRAINING OF ENGINE COOLANT, REPLACEMENT, Engine Coolant.>
6) Disconnect the integrated connector of radiator main fan & fan motor and radiator sub fan & fan motor.

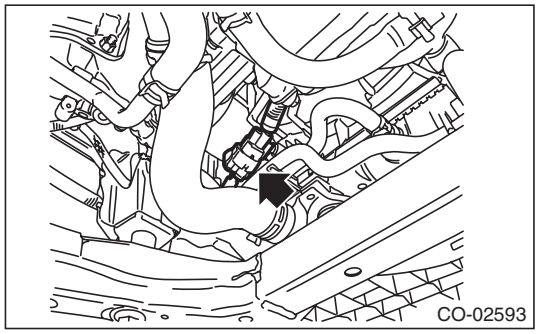

7) Lower the vehicle.
8) Remove the air intake duct. <Ref. to IN(H6DO)-8, REMOVAL, Air Intake Duct.>
9) Remove the grille bracket.

NOTE:
Remove ten clips when removing the grille bracket.

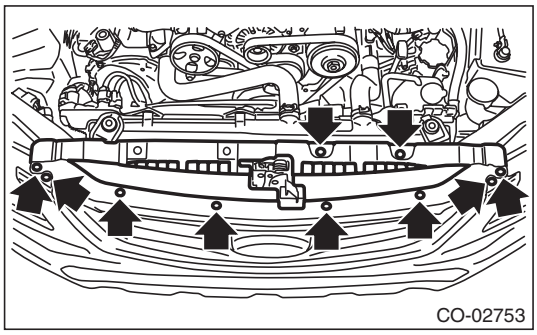

10) Remove the reservoir tank. <Ref. to CO(H6DO)-25, REMOVAL, Reservoir Tank.>
11) Remove radiator inlet hoses LH and RH only on radiator side.

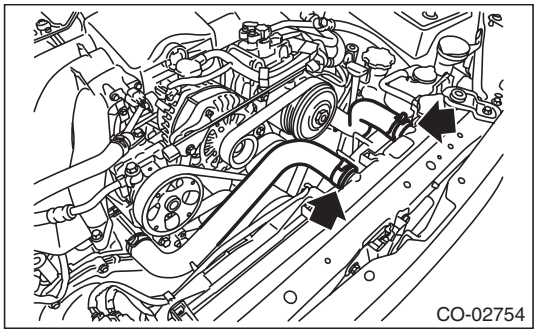

12) Remove the ATF radiator hose from the clip of the radiator fan shroud.
13) Remove bolts on the upper side of radiator fan shroud.

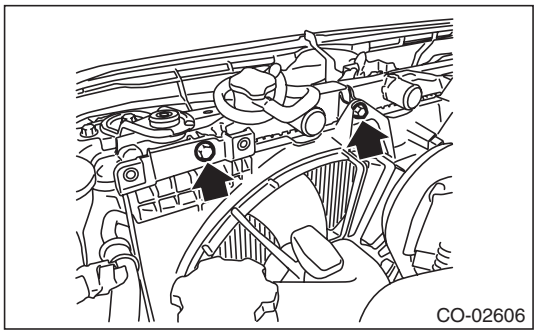

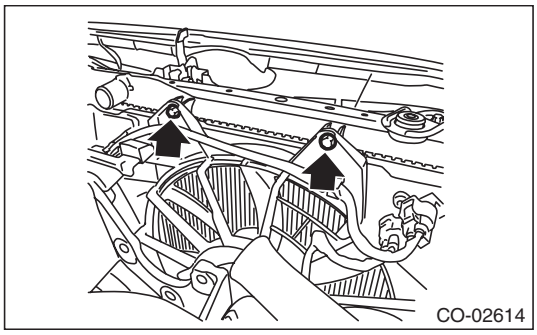

GETtheMANUALS.org

14) Remove the radiator fan shroud.

NOTE:
When pulling up the radiator fan shroud, be careful not to damage the radiator hose or ATF radiator hose.

B: INSTALLATION

1) Tighten the bolts on the upper side of radiator fan shroud.

Tightening torque:
7.5 N·m (0.8 kgf-m, 5.5 ft-lb)

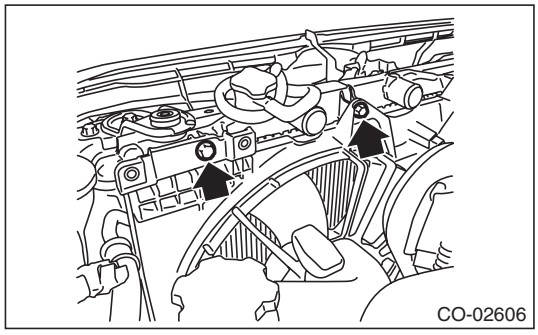
CO-02606

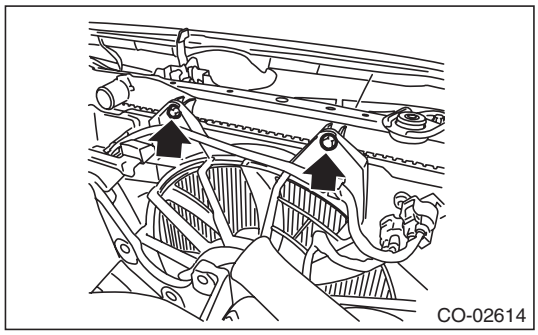
CO-02614

2) Install radiator inlet hoses LH and RH to the radiator.

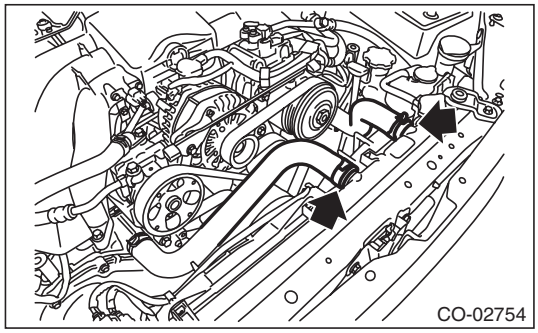
CO-02754

3) Install the reservoir tank. <Ref. to CO(H6DO)-25, INSTALLATION, Reservoir Tank.>

4) Attach the grille bracket.

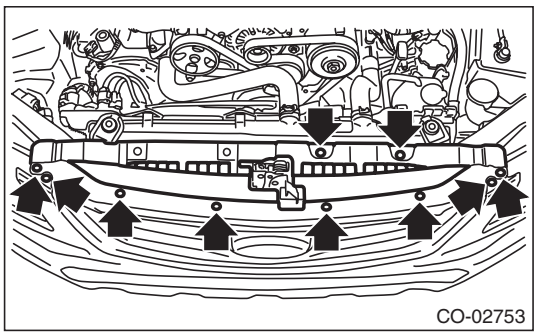
CO-02753

5) Install the air intake duct. <Ref. to IN(H6DO)-8, INSTALLATION, Air Intake Duct.>
6) Lift up the vehicle.
7) Connect the integrated connector of radiator main fan & fan motor and radiator sub fan & fan motor.

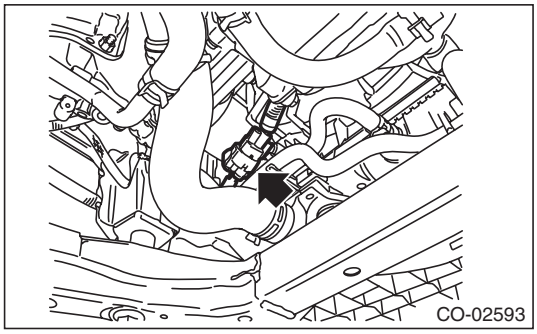
CO-02593

8) Install the under cover. <Ref. to EI-35, INSTALLATION, Front Under Cover.>
9) Lower the vehicle.
10) Fill engine coolant. <Ref. to CO(H6DO)-12, FILLING OF ENGINE COOLANT, REPLACEMENT, Engine Coolant.>
11) Connect the battery ground terminal.
12) Install the collector cover.

GETtheMANUALS.org

C: DISASSEMBLY

1) Disconnect the connector from the radiator fan control unit, and remove the harness.

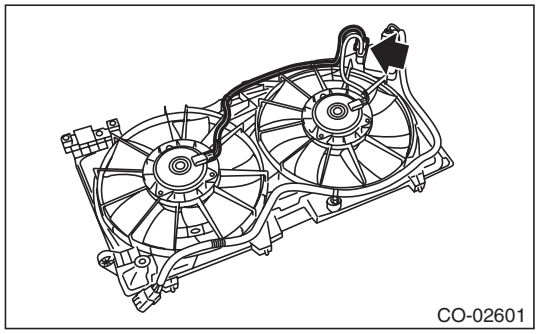

2) Remove the radiator main fan.

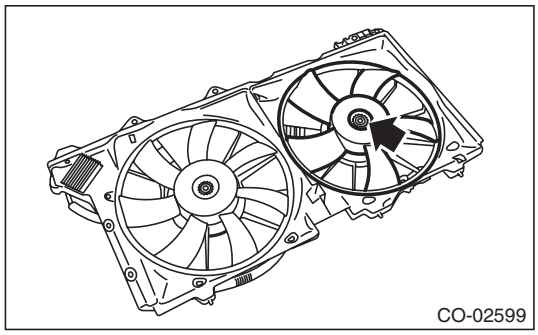

3) Remove the radiator main fan motor.

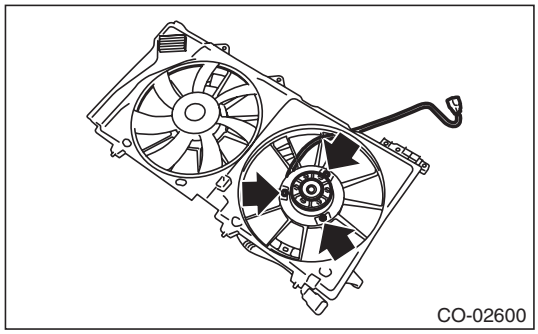

D: ASSEMBLY

Assemble in the reverse order of disassembly.

Tightening torque:
3.8 N·m (0.4 kgf-m, 2.8 ft-lb)

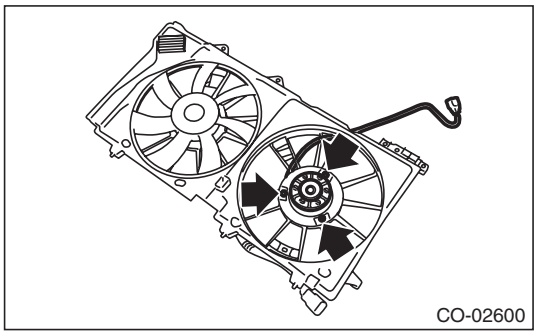

Tightening torque:
6.3 N·m (0.6 kgf-m, 4.6 ft-lb)

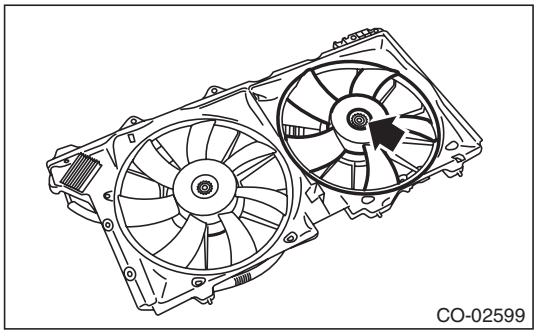

E: INSPECTION

Check that the radiator main fan, radiator main fan shroud and main fan motor do not have deformation, cracks or damage.

GETtheMANUALS.org

9. Radiator Sub Fan and Fan Motor

A: REMOVAL

Refer to the Radiator Main Fan and Fan Motor. <Ref. to CO(H6DO)-21, REMOVAL, Radiator Main Fan and Fan Motor.>

B: INSTALLATION

Refer to the Radiator Main Fan and Fan Motor. <Ref. to CO(H6DO)-22, INSTALLATION, Radiator Main Fan and Fan Motor.>

C: DISASSEMBLY

1) Disconnect the connector from the radiator fan control unit, and remove the harness.

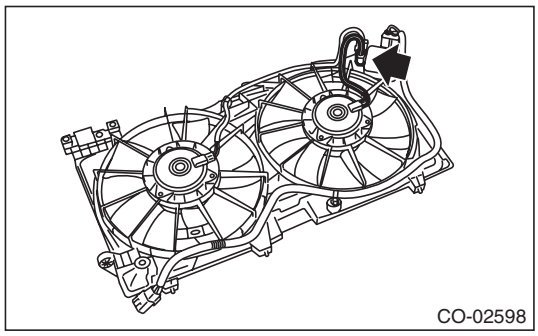

2) Remove the radiator sub fan.

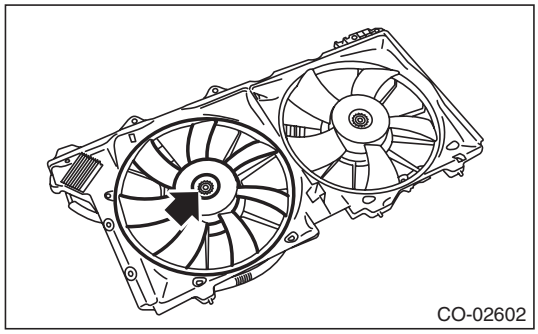

3) Remove the radiator sub fan motor.

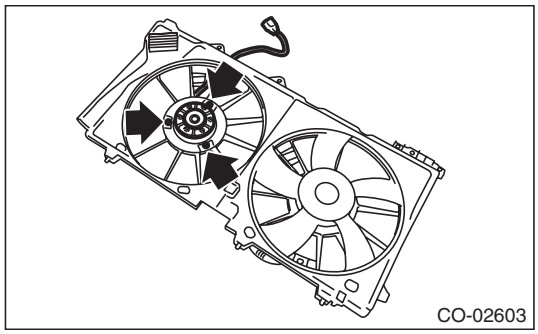

D: ASSEMBLY

Assemble in the reverse order of disassembly.

Tightening torque:
3.8 N·m (0.4 kgf-m, 2.8 ft-lb)

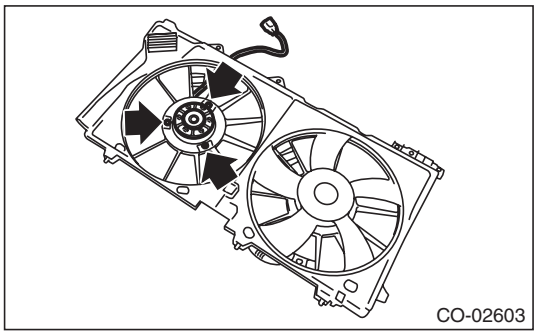

Tightening torque:
6.3 N·m (0.6 kgf-m, 4.6 ft-lb)

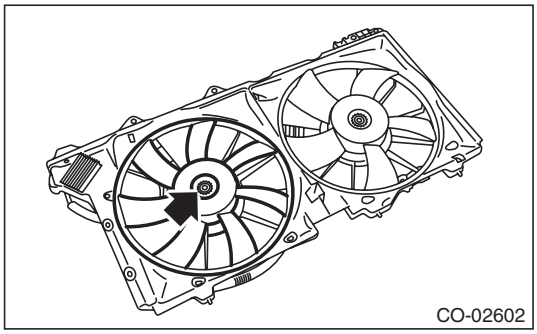

E: INSPECTION

Check that the radiator sub fan, radiator sub fan shroud and sub fan motor do not have deformation, cracks or damage.

GETtheMANUALS.org

10. Reservoir Tank

A: REMOVAL

1) Pull out the over flow hose.
2) Remove bolts which secure the reservoir tank, and remove the reservoir tank.

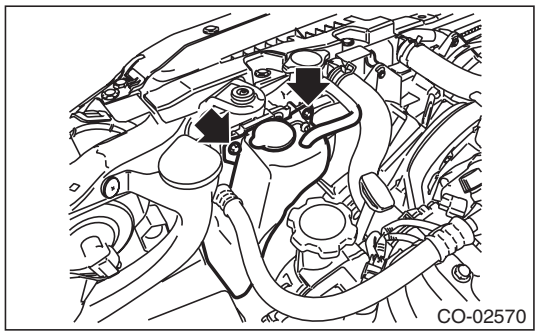

B: INSTALLATION

Install in the reverse order of removal.

Tightening torque:
7.5 N·m (0.8 kgf-m, 5.5 ft-lb)

C: INSPECTION

1) Check that the reservoir tank does not have deformation, cracks or damage.
2) Check the over flow hose for cracks or damage.
3) Make sure the engine coolant level is between “FULL” and “LOW”.

GETtheMANUALS.org

11. Radiator Fan Control Unit

A: REMOVAL

1) Disconnect the ground cable from battery.
2) Remove the radiator fan control unit.
   (1) Disconnect the connector (A) from the radiator fan control unit.
   (2) Remove screws which secure the radiator fan control unit.

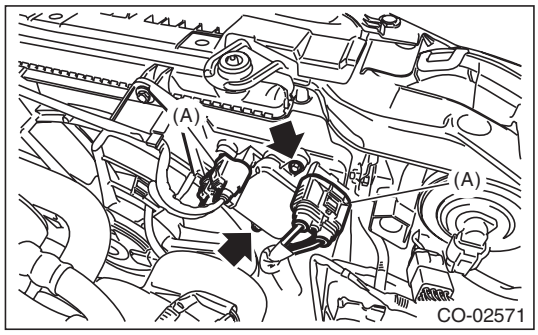

B: INSTALLATION

Install in the reverse order of removal.

Tightening torque:
2.6 N·m (0.3 kgf-m, 1.9 ft-lb)

GETtheMANUALS.org

12. Engine Cooling System Trouble in General

A: INSPECTION

Trouble	Possible cause	Corrective action
Over-heating	a. Insufficient engine coolant	Replenish engine coolant, inspect for leakage, and repair it if necessary.
	b. Defective thermostat	Replace.
	c. Malfunction of water pump	Replace.
	d. Clogged engine coolant passage	Clean.
	e. Improper ignition timing	Inspect and repair the ignition control system. <Ref. to EN(H6DO)(diag)-2, PROCEDURE, Basic Diagnostic Procedure.>
	f. Clogged or leaking radiator	Clean, repair or replace.
	g. Defective radiator cap	Replace.
	h. Improper engine oil in engine coolant	Replace the engine coolant. If ineffective, check, repair or replace engine components.
	i. Air/fuel mixture ratio too lean	Inspect and repair the fuel injection system. <Ref. to EN(H6DO)(diag)-2, PROCEDURE, Basic Diagnostic Procedure.>
	j. Excessive back pressure in exhaust system	Clean or replace.
	k. Insufficient clearance between piston and cylinder	Adjust or replace.
	l. Dragging brake	Adjust.
	m. Defective radiator fan	Inspect the radiator fan relay, engine coolant temperature sensor or fan motor and replace them.
Over-cooling	a. Ambient temperature extremely low	Partly cover radiator front area.
	b. Defective thermostat	Replace.
Engine coolant leaks	a. Loosened or damaged connecting units on hoses	Repair or replace.
	b. Leakage from water pump	Replace.
	c. Leakage from water pipe	Repair or replace.
	d. Leakage around cylinder head gasket	Retighten cylinder head bolts or replace cylinder head gasket.
	e. Damaged or cracked cylinder head and cylinder block	Repair or replace.
	f. Damaged or cracked thermostat cover	Repair or replace.
	g. Leakage from radiator	Repair or replace.
Noise	a. Defective radiator fan	Replace.
	b. Defective water pump bearing	Replace water pump.
	c. Defective water pump mechanical seal	Replace water pump.

GETtheMANUALS.org

GETtheMANUALS.org

LUBRICATION

LU(H6DO)

Page

1. General Description 2
2. Oil Pressure System 7
3. Engine Oil 9
4. Oil Pan 11
5. Oil Pump 12
6. Oil Pressure Switch 14
7. Engine Oil Filter 15
8. Oil Cooler 16
9. Oil Level Switch 17
10. Engine Lubrication System Trouble in General 24

GETtheMANUALS.org

1. General Description

A: SPECIFICATION

Lubrication method					Forced lubrication
Oil pump	Pump type				Trochoid type
	Number of teeth	Inner rotor			7
		Outer rotor			8
	Outer rotor diameter × thickness			mm (in)	76 × 30.2 (2.99 × 1.19)
	Performance (Oil temperature 80°C (176°F))	600 rpm	Discharge pressure	kPa (kgf/cm^2, psi)	98 (1.0, 14)
			Discharge rate	ℓ (US qt, Imp qt)/min.	5.0 (5.3, 4.4) or more
		6,000 rpm	Discharge pressure	kPa (kgf/cm^2, psi)	392 (4.0, 57)
			Discharge rate	ℓ (US qt, Imp qt)/min.	82.8 (87.5, 72.9) or more
Oil filter	Filter type				Full-flow filter type
	Filtration area			cm^2 (sq in)	1,300 (201.5)
	By-pass valve opening pressure			kPa (kgf/cm^2, psi)	160 (1.63, 23.2)
	Outer diameter × width			mm (in)	80 × 75 (3.15 × 2.95)
	Installation screw specifications				M 20 × 1.5
Oil pressure switch	Type				Immersed contact point type
	Operating voltage — power consumption				12 V — 3.4 W or less
	Warning light operating pressure			kPa (kgf/cm^2, psi)	14.7 (0.15, 2.1)
	Proof pressure			kPa (kgf/cm^2, psi)	980 (10.0, 142) or more
Engine oil	Total capacity (at overhaul)			ℓ (US qt, Imp qt)	7.8 (8.2, 6.9)
	When replacing engine oil and oil filter			ℓ (US qt, Imp qt)	6.5 (6.9, 5.7)
	When replacing engine oil only			ℓ (US qt, Imp qt)	6.3 (6.7, 5.5)

Recommended oil:

CAUTION:
It is acceptable to fill an engine with oil of another brand when replacing the oil, but make sure to use the following engine oil specified by Subaru.

Engine oil standard			SAE viscosity No.
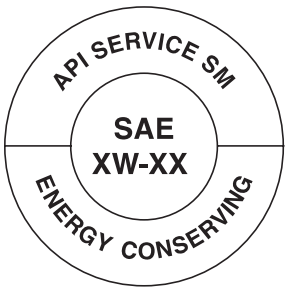 RM-00076	or	RM-00002	5W-30 (synthetic oil)
Those with the API standard SM "Energy Conserving" or SN "Resource Conserving" logo.		Those with the ILSAC standard GF-4 or GF-5 "starburst mark" displayed on top of the container.	

NOTE:
The proper viscosity oil helps the engine maintain its ideal temperature, and cranking speed increased by reducing viscosity friction in hot condition.

GETtheMANUALS.org

B: COMPONENT

1. OIL PAN UPPER, OIL COOLER, AND OIL FILTER

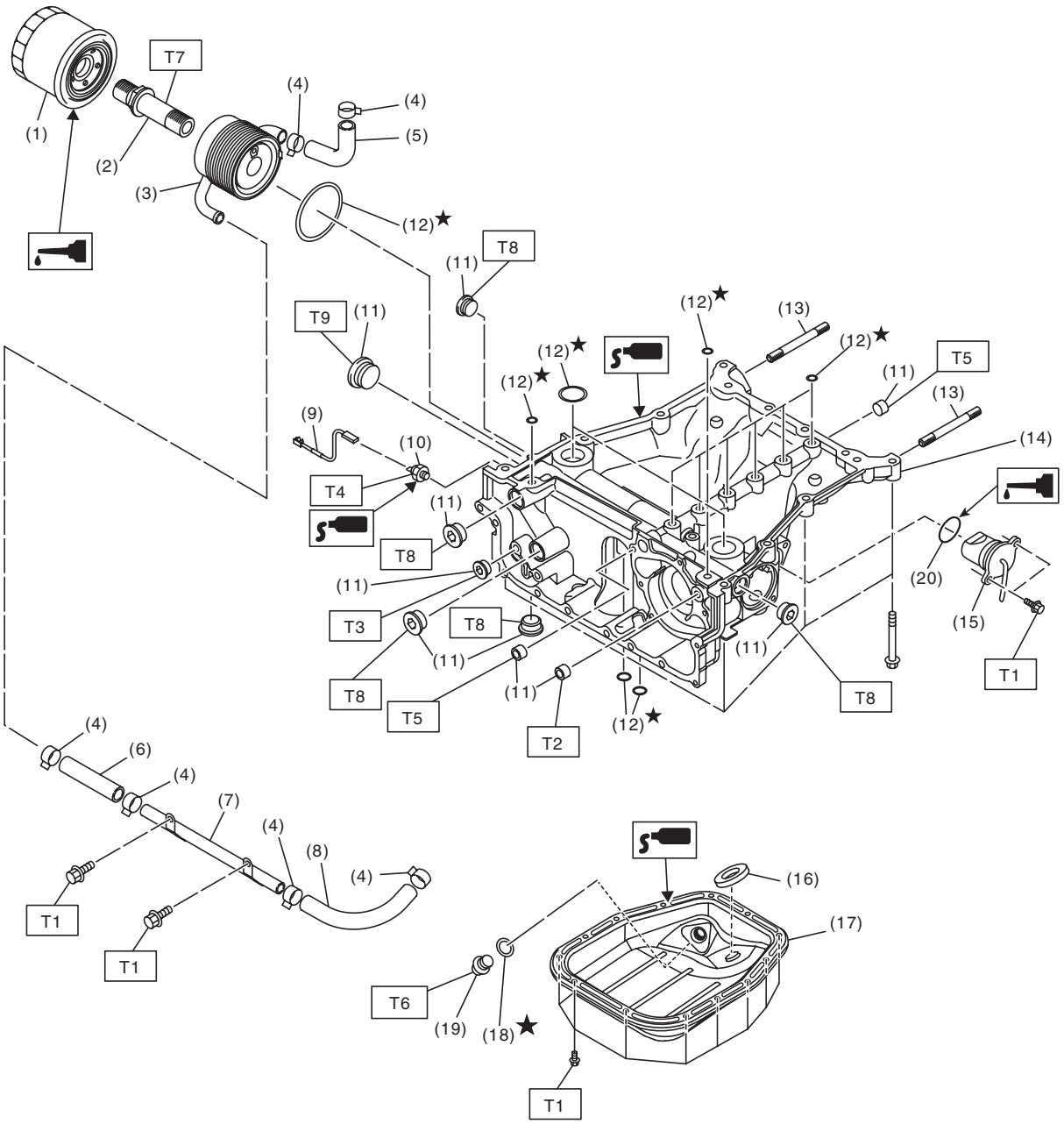

LU-02804

GETtheMANUALS.org

(1)	Oil filter	(11)	Plug	***Tightening torque:N·m (kgf-m, ft-lb)***
(2)	Oil cooler connector	(12)	O-ring	***T1: 6.4 (0.7, 4.7)***
(3)	Oil cooler	(13)	Stud bolt	***T2: 17 (1.7, 12.5)***
(4)	Clamp	(14)	Oil pan upper	***T3: 23 (2.3, 17.0)***
(5)	Water hose	(15)	Oil level switch	***T4: 25 (2.5, 18.4)***
(6)	Water hose	(16)	Oil pan magnet	***T5: 34 (3.5, 25.1)***
(7)	Engine oil cooler water pipe	(17)	Oil pan lower	***T6: 44 (4.5, 32.5)***
(8)	Water hose	(18)	Gasket	***T7: 54 (5.5, 39.8)***
(9)	Oil pressure switch harness	(19)	Drain plug	***T8: 60 (6.1, 44.3)***
(10)	Oil pressure switch	(20)	O-ring	***T9: 90 (9.2, 66.4)***

GETtheMANUALS.org

2. OIL PUMP

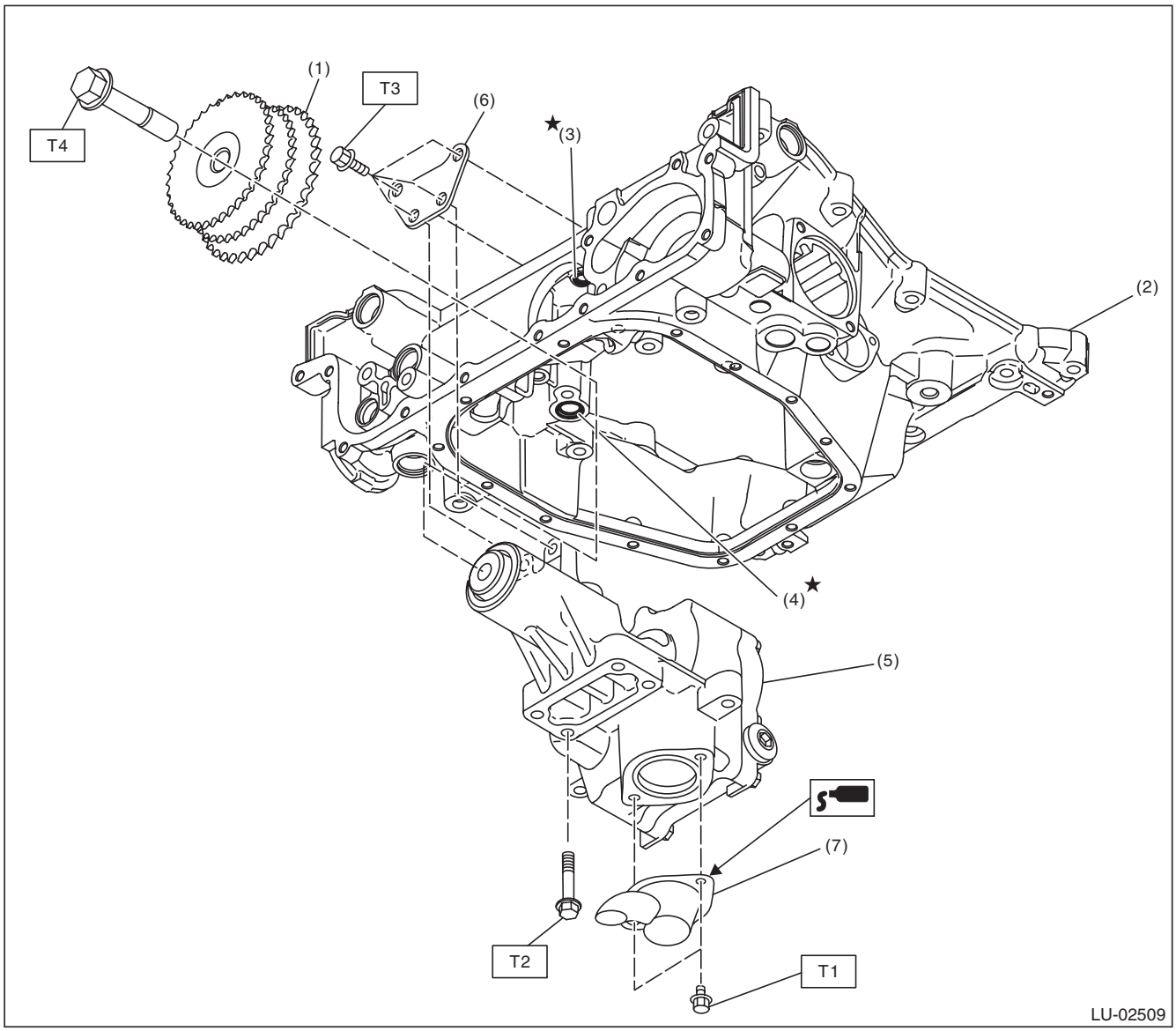

(1)	Idler sprocket	(5)	Oil pump
(2)	Oil pan upper	(6)	Stiffener
(3)	O-ring	(7)	Strainer
(4)	O-ring		

Tightening torque:N·m (kgf-m, ft-lb)

T1: 6.4 (0.7, 4.7)
T2: 13 (1.3, 9.6)
T3: 24 (2.4, 17.7)
T4: 120 (12.2, 88.5)

GETtheMANUALS.org

C: CAUTION

- Wear appropriate work clothing, including a cap, protective goggles and protective shoes when performing any work.
- Remove contamination including dirt and corrosion before removal, installation or disassembly.
- Keep the disassembled parts in order and protect them from dust and dirt.
- Before removal, installation or disassembly, be sure to clarify the failure. Avoid unnecessary removal, installation, disassembly and replacement.
- Before applying liquid gasket, completely remove the old liquid gasket and degrease it.
- Vehicle components are extremely hot after driving. Be wary of receiving burns from heated parts.
- Be sure to tighten fasteners including bolts and nuts to the specified torque.
- Place shop jacks or rigid racks at the specified points.
- Before disconnecting connectors of sensors or units, be sure to disconnect the ground cable from battery.
- If the engine oil is spilt over exhaust pipe or the under cover, wipe it off with cloth to avoid emitting smoke or causing a fire.
- Prepare a container and cloth to prevent scattering of oil when performing work where fuels can be spilled. If the oil spills, wipe it off immediately to prevent from penetrating into floor or flowing out for environmental protection.
- Follow all government and local regulations concerning disposal of refuse when disposing of oil.

D: PREPARATION TOOL

1. SPECIAL TOOL

ILLUSTRATION	TOOL NUMBER	DESCRIPTION	REMARKS
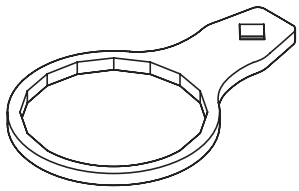 ST18332AA020	18332AA020	OIL FILTER WRENCH	Used for removing and installing oil filter.

2. GENERAL TOOL

TOOL NAME	REMARKS
Circuit tester	Used for measuring resistance and voltage.

GETtheMANUALS.org

2. Oil Pressure System

A: WIRING DIAGRAM

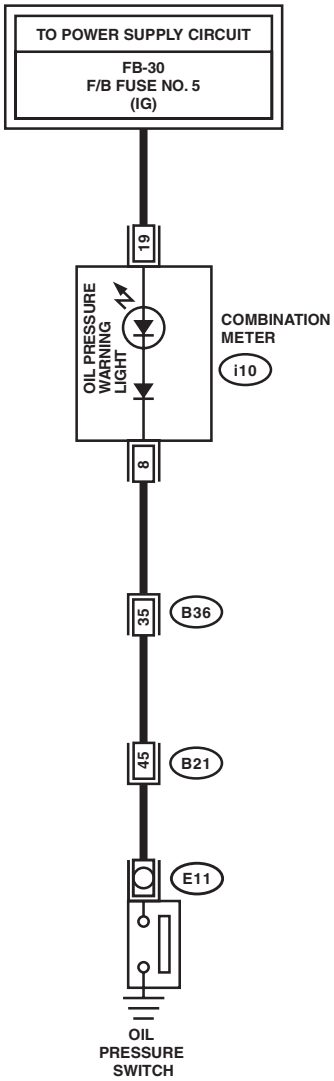

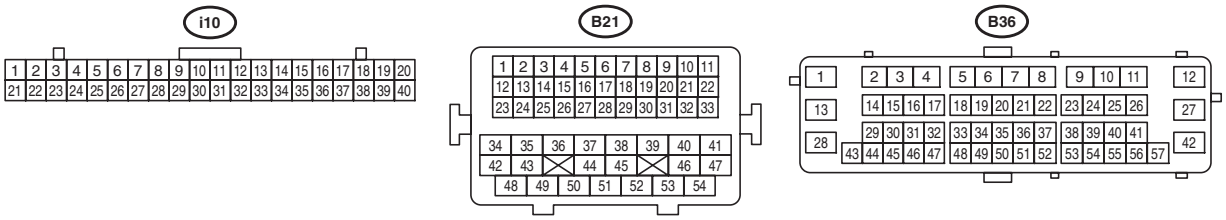

LU-02589

GETtheMANUALS.org

B: INSPECTION

Step		Check	Yes	No
1	**CHECK COMBINATION METER.** 1) Turn the ignition switch to ON. (engine OFF) 2) Check the warning light of combination meter.	Does the warning light illuminate?	Go to step **2**.	Repair or replace the combination meter. <Ref. to IDI-11, INSPECTION, Combination Meter System.>
2	**CHECK HARNESS CONNECTOR BETWEEN COMBINATION METER AND OIL PRESSURE SWITCH.** 1) Turn the ignition switch to OFF. 2) Disconnect the connector from oil pressure switch. 3) Turn the ignition switch to ON. 4) Measure the voltage of harness between oil pressure switch connector and chassis ground. ***Connector & terminal*** ***(E11) No. 1 (+) — Chassis ground (–):***	Is the voltage 10 V or more?	Replace the oil pressure switch. <Ref. to LU(H6DO)-14, Oil Pressure Switch.>	Go to step **3**.
3	**CHECK COMBINATION METER.** 1) Turn the ignition switch to OFF. 2) Remove the combination meter. 3) Measure the resistance of combination meter. ***Terminals*** ***(i10) No. 8 — (i10) No. 19:***	Is the resistance less than 10 Ω?	Repair the harness and connector. NOTE: In this case, repair the following item: • Open circuit of harness between combination meter and oil pressure switch • Poor contact of combination meter connector • Poor contact of oil pressure switch connector • Poor contact of coupling connector	Repair or replace the combination meter. <Ref. to IDI-11, INSPECTION, Combination Meter System.>

GETtheMANUALS.org

3. Engine Oil

A: INSPECTION

CAUTION:
If the engine oil is spilt over exhaust pipe or the under cover, wipe it off with cloth to avoid emitting smoke or causing a fire.

1) Park the vehicle on a level surface.
2) Remove the oil level gauge and wipe away the oil.
3) Reinsert the oil level gauge all the way. Be sure that the oil level gauge is correctly inserted and properly orientated.
4) Pull out the oil level gauge again, and check the oil level. If the engine oil level is below “L” line, make sure that there is no oil leakage from the engine, then add oil to raise the level up to the “F” line.
5) Start the engine to circulate the oil in engine room.
6) After turning off the engine, wait a few minutes for the oil to return to the oil pan before checking the level.

NOTE:
- Just after driving or while the engine is warm, engine oil level may be exceeding the “F” line. This is caused by thermal expansion of engine oil.
- To prevent overfilling of engine oil, do not add oil above “F” line when the engine is cold.
- As the oil level gauge is used for daily inspection, standard of “F” line and “L” line of the oil level gauge is set for the condition that engine is cold.

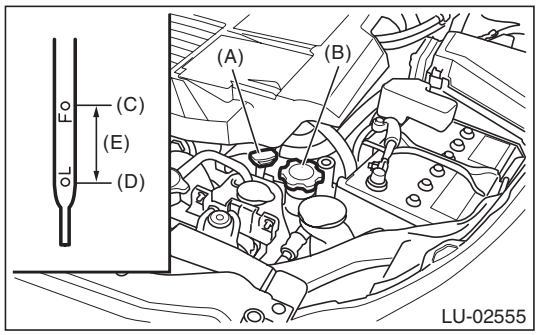

(A) Oil level gauge
(B) Engine oil filler cap
(C) “F” line
(D) “L” line
(E) Approx. 1.0 ℓ (1.1 US qt, 0.9 Imp qt)

B: REPLACEMENT

CAUTION:
If the engine oil is spilt over exhaust pipe or the under cover, wipe it off with cloth to avoid emitting smoke or causing a fire.

1) Open the engine oil filler cap for quick draining of engine oil.
2) Lift up the vehicle.
3) Remove the under cover. <Ref. to EI-35, REMOVAL, Front Under Cover.>
4) Drain engine oil by loosening the engine oil drain plug.

NOTE:
Prepare the container for draining of engine oil.

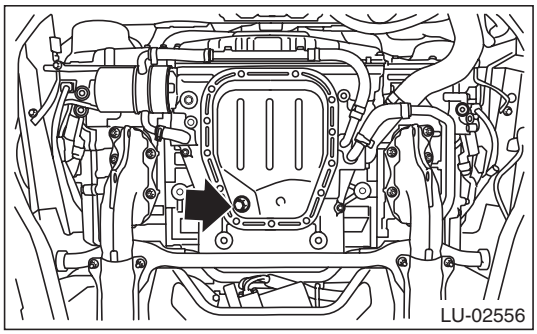

5) Tighten the engine oil drain plug after draining engine oil.

NOTE:
Use a new drain plug gasket.

Tightening torque:
44 N·m (4.5 kgf-m, 32.5 ft-lb)

6) Install the under cover. <Ref. to EI-35, INSTALLATION, Front Under Cover.>
7) Lower the vehicle.
8) Using engine oil of proper quality and viscosity, fill engine oil through the oil filler duct to the “F” line on level gauge. Make sure that the vehicle is parked on a level surface when checking oil level.

Recommended oil:
Refer to “SPECIFICATION” for recommended oil. <Ref. to LU(H6DO)-2, SPECIFICATION, General Description.>

Engine oil capacity:
Refer to “SPECIFICATION” for engine oil capacity. <Ref. to LU(H6DO)-2, SPECIFICATION, General Description.>

9) Close the engine oil filler cap.
10) Start the engine to circulate the oil in engine room.

GETtheMANUALS.org

11) After the engine stops, recheck the oil level. If necessary, add engine oil up to the “F” line on level gauge.

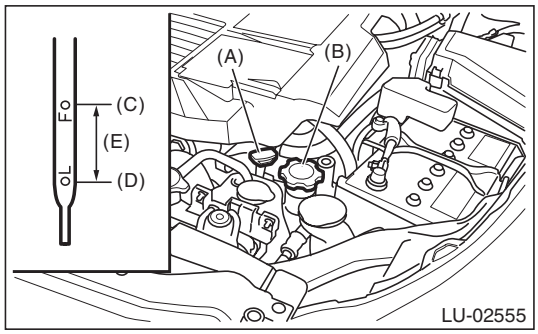

(A) Oil level gauge
(B) Engine oil filler cap
(C) “F” line
(D) “L” line
(E) Approx. 1.0 ℓ (1.1 US qt, 0.9 Imp qt)

GETthemanuals.org

4. Oil Pan

A: REMOVAL

NOTE:
Before removing the oil pan upper, remove the engine from vehicle. <Ref. to ME(H6DO)-36, REMOVAL, Engine Assembly.> <Ref. to ME(H6DO)-104, REMOVAL, Cylinder Block.>
1) Lift up the vehicle.
2) Remove the under cover. <Ref. to EI-35, REMOVAL, Front Under Cover.>
3) Drain the engine oil. <Ref. to LU(H6DO)-9, REPLACEMENT, Engine Oil.>
4) Insert an oil pan cutter blade into the gap between oil pan upper and oil pan lower, and remove the oil pan.

CAUTION:
Do not use a screwdriver or similar tool in place of oil pan cutter.
5) Remove the oil pan lower.

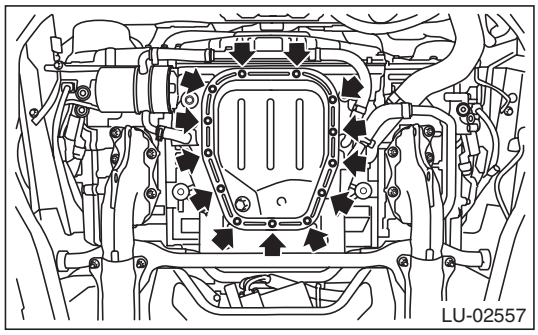

B: INSTALLATION

1) Apply liquid gasket to the mating surfaces of oil pan, and install the oil pan lower.

NOTE:
Install within 5 min. after applying liquid gasket.

Liquid gasket:
THREE BOND 1217G (Part No. K0877Y0100) or equivalent

Liquid gasket applying diameter:
5.0±1.0 mm (0.197±0.039 in)

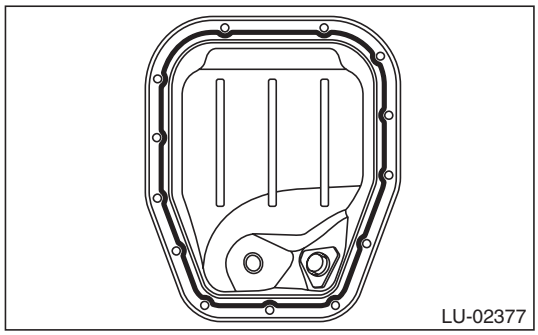

2) Tighten the oil pan lower installing bolts in the numerical order as shown in the figure.

Tightening torque:
6.4 N·m (0.7 kgf-m, 4.7 ft-lb)

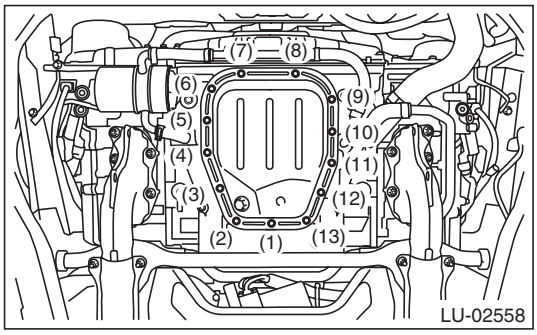

3) Install the under cover. <Ref. to EI-35, INSTALLATION, Front Under Cover.>
4) Lower the vehicle.
5) Refill the engine oil. <Ref. to LU(H6DO)-9, REPLACEMENT, Engine Oil.>
6) Check the engine oil level. <Ref. to LU(H6DO)-9, INSPECTION, Engine Oil.>

C: INSPECTION

Check that the oil pan upper and oil pan lower have no deformation, cracks or other damages.

GETtheMANUALS.org

5. Oil Pump

A: REMOVAL

1) Remove the collector cover.

NOTE:
Follow the steps below when removing the collector cover.
(1) Lift up (A) in two positions at the rear.
(2) Moving (B) in two positions at the front toward the vehicle, lift them up.

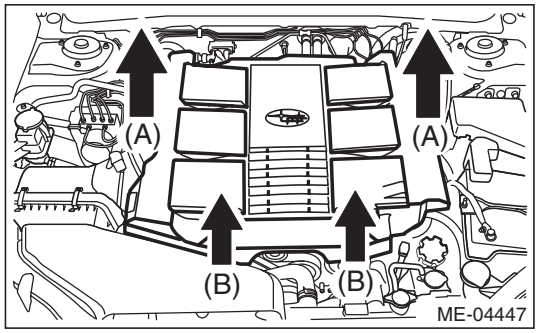

2) Disconnect the ground cable from battery.
3) Lift up the vehicle.
4) Remove the under cover. <Ref. to EI-35, REMOVAL, Front Under Cover.>
5) Drain the engine oil. <Ref. to LU(H6DO)-9, REPLACEMENT, Engine Oil.>
6) Drain engine coolant. <Ref. to CO(H6DO)-12, DRAINING OF ENGINE COOLANT, REPLACEMENT, Engine Coolant.>
7) Lower the vehicle.
8) Remove the radiator. <Ref. to CO(H6DO)-17, REMOVAL, Radiator.>
9) Remove the V-belts. <Ref. to ME(H6DO)-51, REMOVAL, V-belt.>
10) Remove the crank pulley. <Ref. to ME(H6DO)-52, REMOVAL, Crank Pulley.>
11) Remove the chain cover. <Ref. to ME(H6DO)-53, REMOVAL, Chain Cover.>
12) Remove the timing chain. <Ref. to ME(H6DO)-63, REMOVAL, Timing Chain Assembly.>
13) Remove the oil pan lower. <Ref. to LU(H6DO)-11, REMOVAL, Oil Pan.>
14) Remove the stiffener and the oil pump.

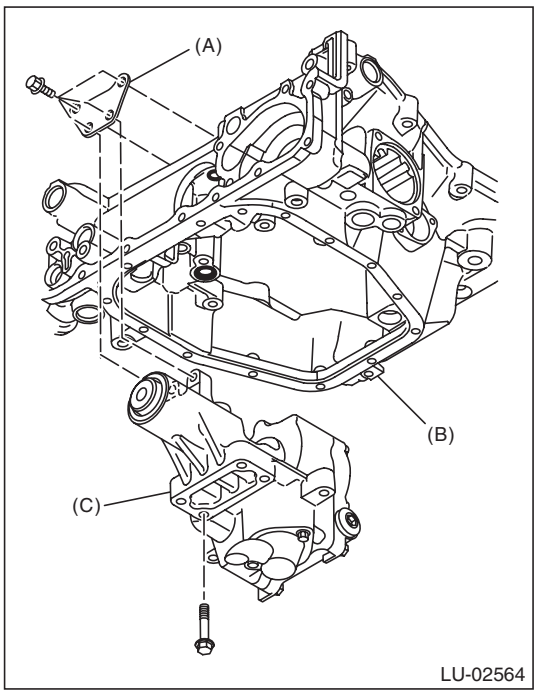

(A) Stiffener
(B) Oil pan upper
(C) Oil pump

15) Remove the strainer from the oil pump.
16) Remove the O-ring from oil pan upper.

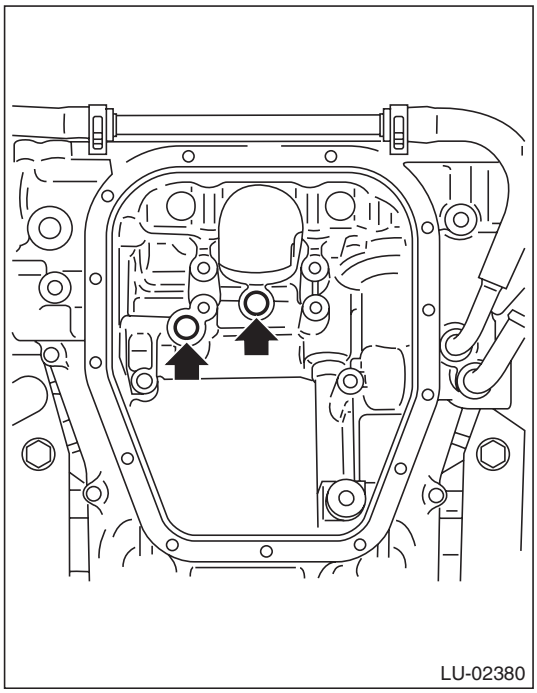

GETtheMANUALS.org

B: INSTALLATION

1) Apply engine oil to the O-ring and attach it to the oil pan upper.

NOTE:
Use new O-rings.

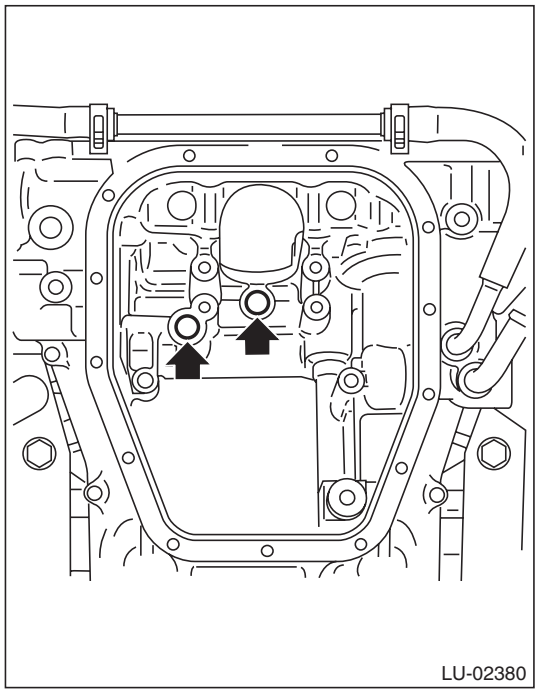

2) Apply liquid gasket to the mating surfaces of strainer.

Liquid gasket:
THREE BOND 1217G (Part No. K0877Y0100) or equivalent

Liquid gasket applying diameter:
2.0±1.0 mm (0.079±0.039 in)

NOTE:
- Install within 5 min. after applying liquid gasket.
- After installing the strainer, remove any liquid gasket that is squeezed out.

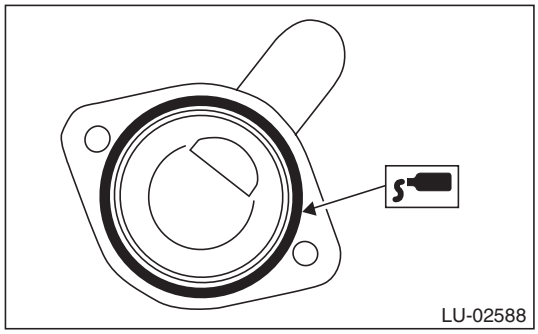

3) Install the strainer to the oil pump.

Tightening torque:
6.4 N·m (0.7 kgf-m, 4.7 ft-lb)

4) Install the stiffener and the oil pump.

Tightening torque:
T1: 13 N·m (1.3 kgf-m, 9.6 ft-lb)
T2: 24 N·m (2.4 kgf-m, 17.7 ft-lb)

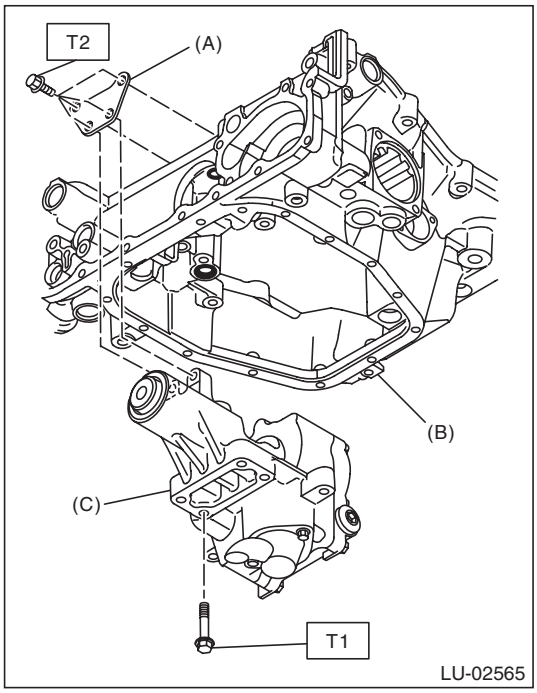

(A) Stiffener
(B) Oil pan upper
(C) Oil pump

5) Install the oil pan lower. <Ref. to LU(H6DO)-11, INSTALLATION, Oil Pan.>
6) Install the timing chain. <Ref. to ME(H6DO)-69, INSTALLATION, Timing Chain Assembly.>
7) Install the chain cover. <Ref. to ME(H6DO)-56, INSTALLATION, Chain Cover.>
8) Install the crank pulley. <Ref. to ME(H6DO)-52, INSTALLATION, Crank Pulley.>
9) Install the V-belts. <Ref. to ME(H6DO)-51, INSTALLATION, V-belt.>
10) Install the radiator. <Ref. to CO(H6DO)-18, INSTALLATION, Radiator.>
11) Lift up the vehicle.
12) Install the under cover. <Ref. to EI-35, INSTALLATION, Front Under Cover.>
13) Lower the vehicle.
14) Fill the ATF. <Ref. to CO(H6DO)-12, FILLING OF ENGINE COOLANT, REPLACEMENT, Engine Coolant.>
15) Refill the engine oil. <Ref. to LU(H6DO)-9, REPLACEMENT, Engine Oil.>
16) Check the engine oil level. <Ref. to LU(H6DO)-9, INSPECTION, Engine Oil.>

C: INSPECTION

- Visually check the oil pump for breakage.
- Visually check the strainer portion for clogging.

GETthemanuals.org

6. Oil Pressure Switch

A: REMOVAL

1) Disconnect the ground cable from battery.
2) Lift up the vehicle.
3) Remove the under cover. <Ref. to EI-35, REMOVAL, Front Under Cover.>
4) Drain the engine oil. <Ref. to LU(H6DO)-9, REPLACEMENT, Engine Oil.>
5) Disconnect the terminal from oil pressure switch.

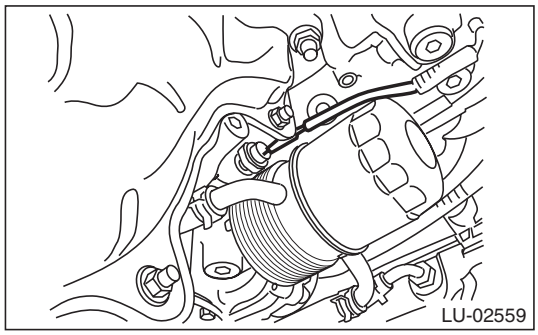

6) Remove the oil pressure switch.

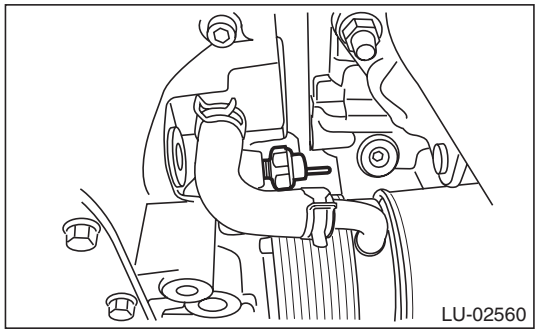

B: INSTALLATION

1) Apply liquid gasket to the oil pressure switch threads.

Liquid gasket:
THREE BOND 1324 (Part No. 004403042) or equivalent

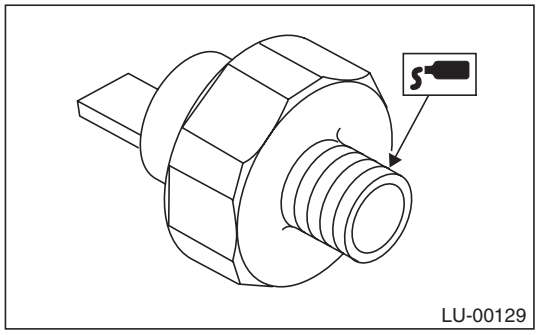

2) Install the oil pressure switch.

Tightening torque:
25 N·m (2.5 kgf-m, 18.4 ft-lb)

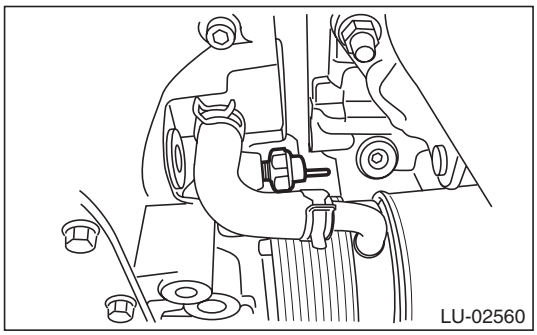

3) Connect the terminal of the oil pressure switch.

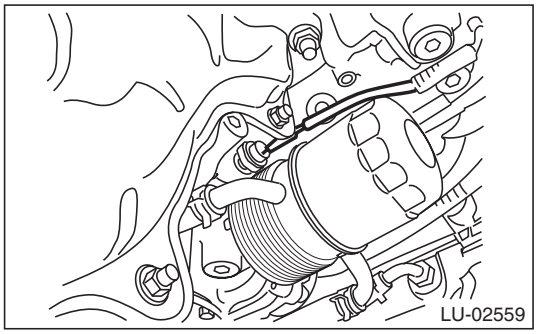

4) Install the under cover. <Ref. to EI-35, INSTALLATION, Front Under Cover.>
5) Refill the engine oil. <Ref. to LU(H6DO)-9, REPLACEMENT, Engine Oil.>
6) Check the engine oil level. <Ref. to LU(H6DO)-9, INSPECTION, Engine Oil.>

C: INSPECTION

1) Check that the oil pressure switch does not have deformation, cracks or damage.
2) Check the oil pressure switch installation portion for oil leakage and oil seepage.

GETtheMANUALS.org

7. Engine Oil Filter

A: REMOVAL

CAUTION:
If the engine oil is spilt over exhaust pipe or the under cover, wipe it off with cloth to avoid emitting smoke or causing a fire.

1) Lift up the vehicle.
2) Drain the engine oil. <Ref. to LU(H6DO)-9, REPLACEMENT, Engine Oil.>
3) Remove the under cover. <Ref. to EI-35, REMOVAL, Front Under Cover.>
4) Remove the engine oil filter using the ST.
ST 18332AA020 OIL FILTER WRENCH

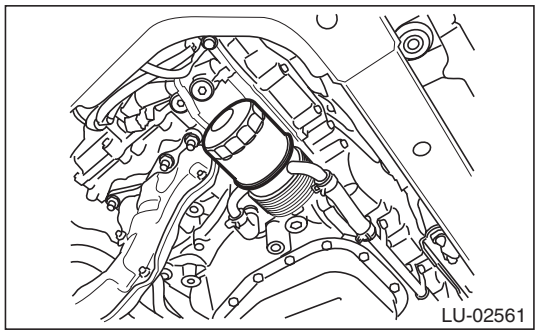

B: INSTALLATION

CAUTION:
Do not tighten excessively, or oil may leak.

1) Clean the engine oil filter installation surface of the oil cooler.
2) Obtain a new engine oil filter and apply a thin coat of engine oil to the seal rubber.
3) Install the engine oil filter turning it by hand, being careful not to damage the seal rubber.
4) Tighten more (approx. 3/4 turn) after the seal rubber contacts the oil cooler. When using a torque wrench, tighten to 14 N·m (1.4 kgf-m, 10.3 ft-lb).
5) Install the under cover. <Ref. to EI-35, INSTALLATION, Front Under Cover.>
6) Lower the vehicle.
7) Refill the engine oil. <Ref. to LU(H6DO)-9, REPLACEMENT, Engine Oil.>
8) Check the engine oil level. <Ref. to LU(H6DO)-9, INSPECTION, Engine Oil.>

C: INSPECTION

1) After installing the engine oil filter, run the engine and make sure that no oil is leaking around seal rubber.

NOTE:
The filter element and filter case are permanently jointed; therefore, interior cleaning is not necessary.

2) Check the engine oil level. <Ref. to LU(H6DO)-9, INSPECTION, Engine Oil.>

GETthemANUALS.org

8. Oil Cooler

A: REMOVAL

CAUTION:
If the engine oil is spilt over exhaust pipe or the under cover, wipe it off with cloth to avoid emitting smoke or causing a fire.

1) Lift up the vehicle.
2) Remove the under cover. <Ref. to EI-35, REMOVAL, Front Under Cover.>
3) Drain engine coolant. <Ref. to CO(H6DO)-12, DRAINING OF ENGINE COOLANT, REPLACEMENT, Engine Coolant.>
4) Drain the engine oil. <Ref. to LU(H6DO)-9, REPLACEMENT, Engine Oil.>
5) Remove the bolts which hold the engine oil cooler water pipe to chain cover and disconnect the water hose from oil cooler.

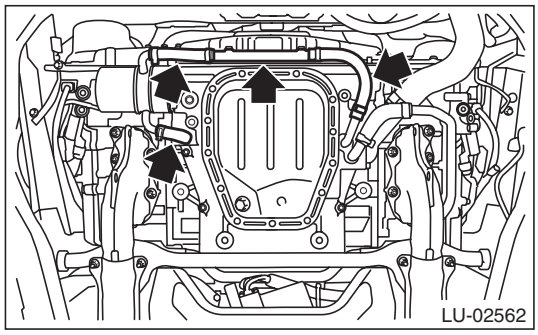

6) Remove the engine oil filter using the ST. <Ref. to LU(H6DO)-15, REMOVAL, Engine Oil Filter.>
ST 18332AA020 OIL FILTER WRENCH
7) Remove the oil cooler connector and remove the oil cooler.

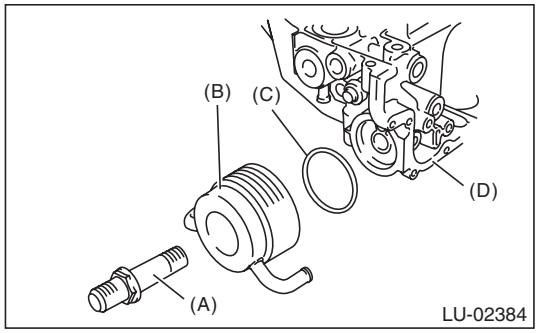

(A) Oil cooler connector
(B) Oil cooler
(C) O-ring
(D) Oil pan upper

B: INSTALLATION

1) Tighten the oil cooler connector to install the oil cooler to the oil pan upper.

Tightening torque:
54 N·m (5.5 kgf-m, 39.8 ft-lb)

NOTE:
Use new O-rings.

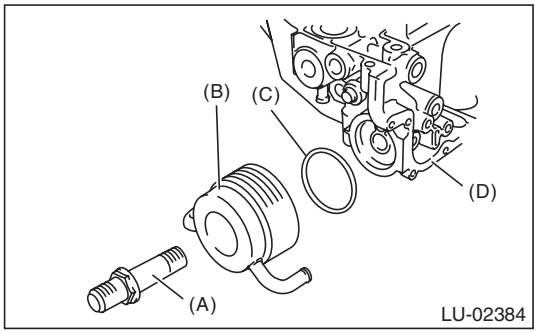

(A) Oil cooler connector
(B) Oil cooler
(C) O-ring
(D) Oil pan upper

2) Attach the engine oil filter. <Ref. to LU(H6DO)-15, INSTALLATION, Engine Oil Filter.>
3) Attach the bolts which hold the engine oil cooler water pipe to chain cover and connect the water hose to oil cooler.

Tightening torque:
T: 6.4 N·m (0.7 kgf-m, 4.7 ft-lb)

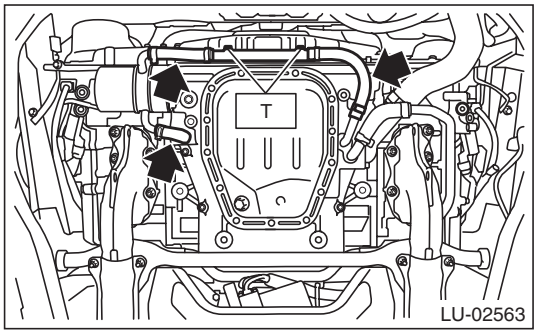

4) Install the under cover. <Ref. to EI-35, INSTALLATION, Front Under Cover.>
5) Lower the vehicle.
6) Fill the ATF. <Ref. to CO(H6DO)-12, FILLING OF ENGINE COOLANT, REPLACEMENT, Engine Coolant.>
7) Refill the engine oil. <Ref. to LU(H6DO)-9, REPLACEMENT, Engine Oil.>
8) Check the engine oil level. <Ref. to LU(H6DO)-9, INSPECTION, Engine Oil.>

C: INSPECTION

1) Check that coolant passages are not clogged using an compressed air.
2) Check that the oil pan upper and O-ring installing surface of oil filter are not damaged.

GETtheMANUALS.org

9. Oil Level Switch

A: REMOVAL

1) Disconnect the ground cable from battery.
2) Lift up the vehicle.
3) Remove the under cover. <Ref. to EI-35, REMOVAL, Front Under Cover.>
4) Drain the engine oil. <Ref. to LU(H6DO)-9, REPLACEMENT, Engine Oil.>
5) Disconnect the connector of oil level switch from the engine harness.

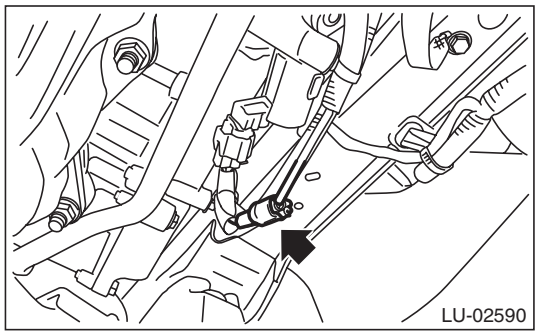

6) Remove the clips which hold the front camshaft cap (LH) and cylinder head (LH).

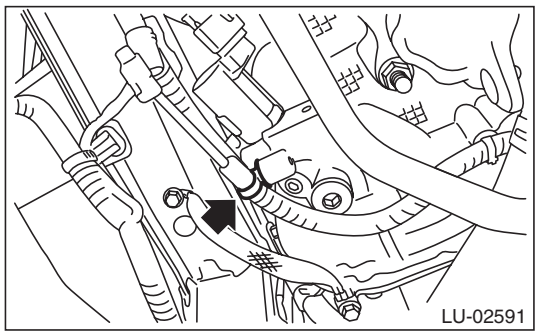

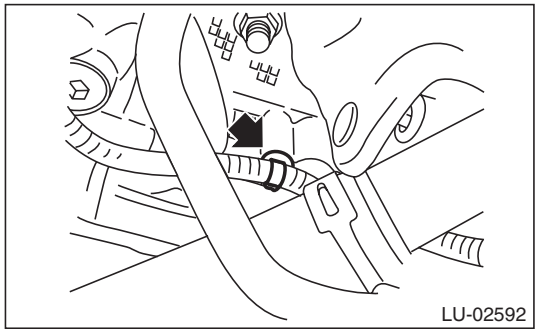

7) Remove the oil level switch from the oil pan upper.

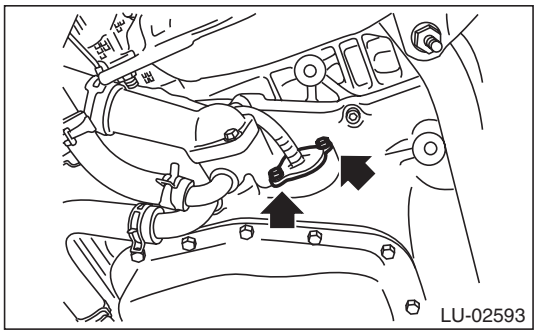

8) Remove the oil level switch.

B: INSTALLATION

1) Route the oil level switch harness as shown in the figure.

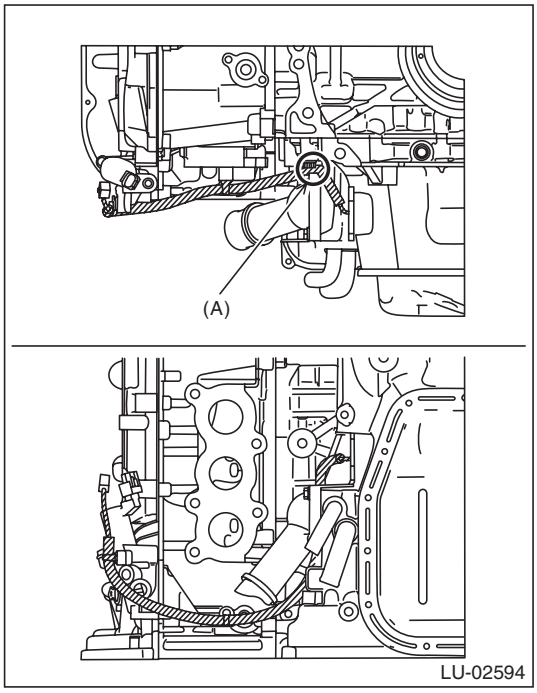

(A) Route the oil level switch harness through inside of oil pan upper bolt.

GETtheMANUALS.org

2) Attach the oil level switch to the oil pan upper.

NOTE:
- Use new O-rings.
- Apply engine oil to O-ring.

Tightening torque:
6.4 N·m (0.7 kgf-m, 4.7 ft-lb)

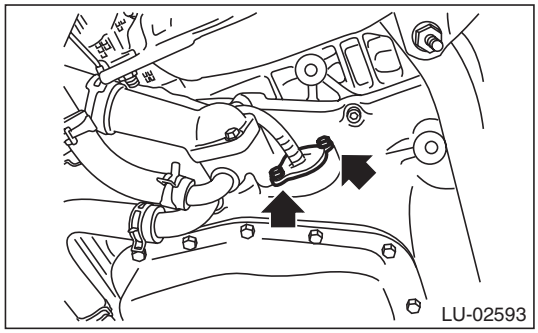

3) Attach the clips which hold the front camshaft cap (LH) and cylinder head (LH).

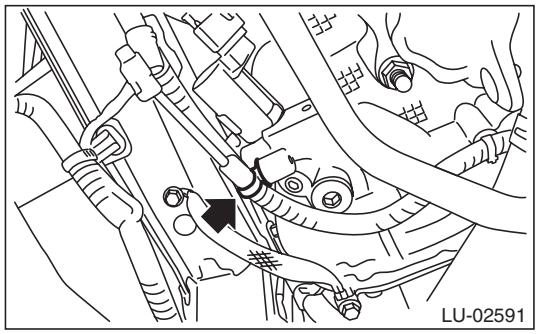

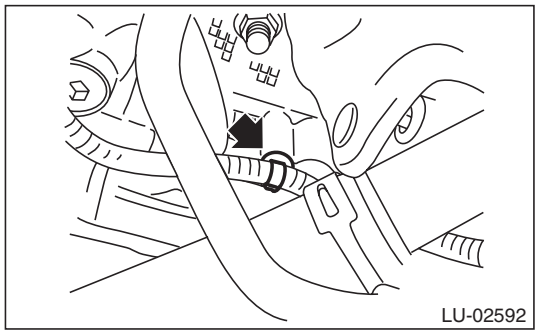

4) Connect the connector of the oil level switch to the engine harness.

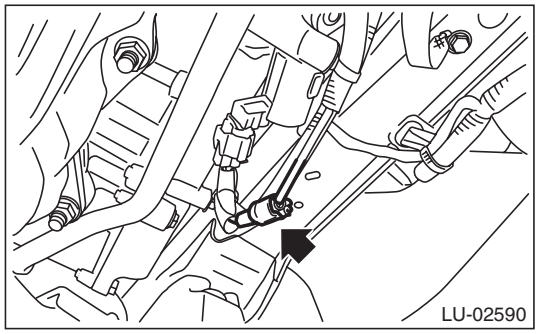

5) Install the under cover. <Ref. to EI-35, INSTALLATION, Front Under Cover.>

6) Lower the vehicle.
7) Refill the engine oil. <Ref. to LU(H6DO)-9, REPLACEMENT, Engine Oil.>
8) Check the engine oil level. <Ref. to LU(H6DO)-9, INSPECTION, Engine Oil.>

GETthemanuals.org

C: WIRING DIAGRAM

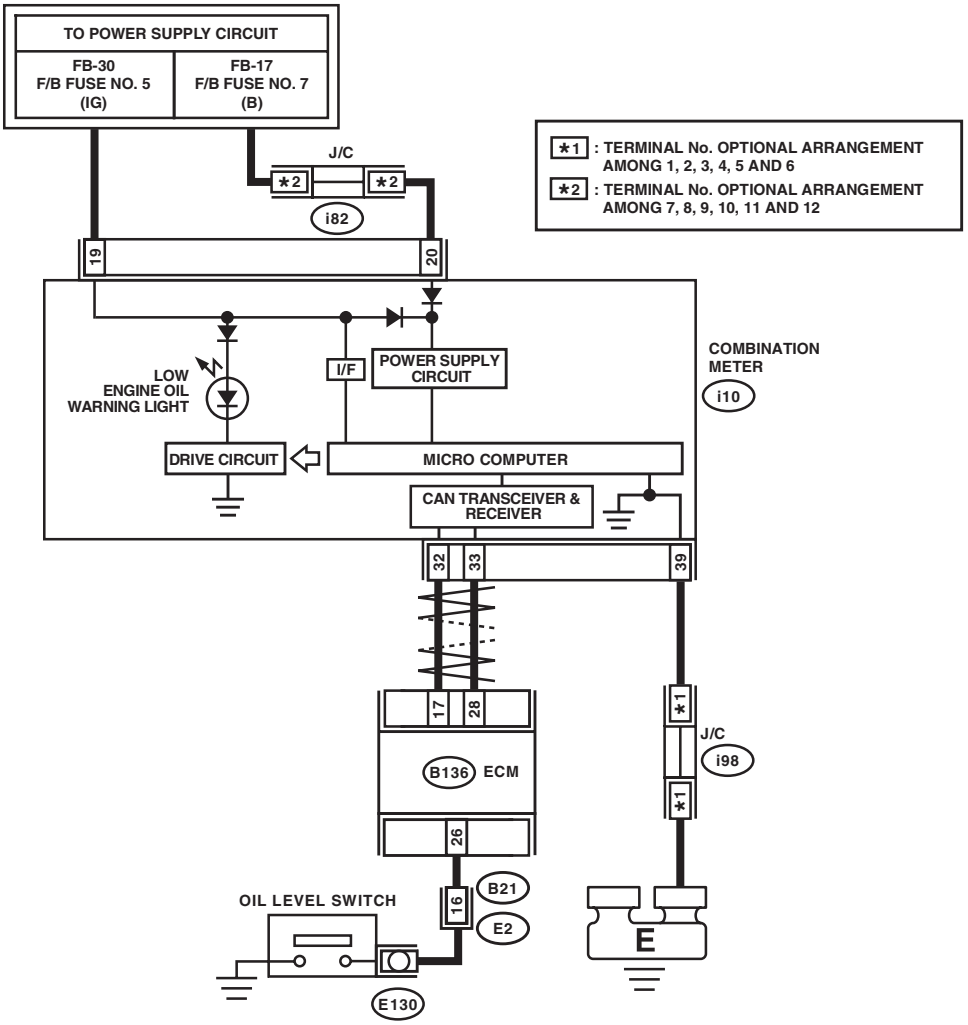

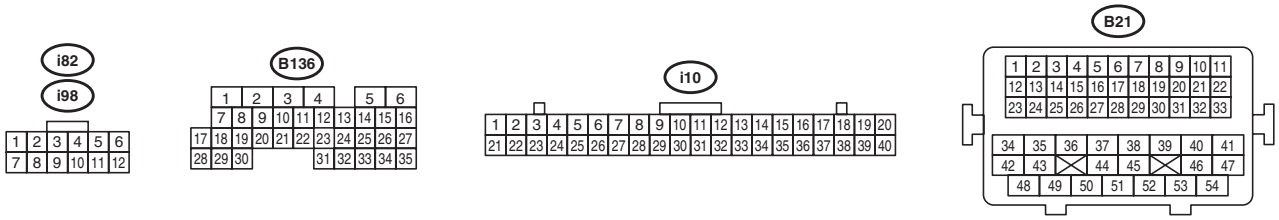

LU-02654

GETthemanuals.org

D: INSPECTION

1. INSPECTION WHEN LOW ENGINE OIL WARNING LIGHT IS ILLUMINATED

Step	Check	Yes	No
1 CHECK ENGINE OIL LEVEL.	Is engine oil level normal?	Go to step **2**.	Replace engine oil or refill, and check again while the oil level is normal condition. <Ref. to LU(H6DO)-9, REPLACEMENT, Engine Oil.> To turn off the low engine oil warning light, install the spare fuse at the delivery (test) mode fuse in the main fuse box. Then turn the ignition switch to ON (engine off) again, to confirm the low engine oil warning light turns off. Remove the spare fuse installed to finish. NOTE: The engine oil level switch is normal, if the low engine oil level warning light turns off with the delivery (test) mode fuse installed.
2 CHECK LAN SYSTEM.	Has a DTC of the LAN system been input?	Perform the diagnosis according to DTC.	Go to step **3**.

GETtheMANUALS.org

Step		Check	Yes	No
3	**CHECK OIL LEVEL SWITCH CIRCUIT.** 1) Turn the ignition switch to ON (engine OFF). 2) Read the current data for engine in the Subaru Select Monitor to confirm the item for "Oil level switch". <Ref. to EN(H6DO)(diag)-35, READ CURRENT DATA FOR ENGINE (NORMAL MODE), OPERATION, Subaru Select Monitor.>	Is the "Oil level switch" signal displayed in Subaru Select Monitor HIGH?	To turn off the low engine oil warning light, install the spare fuse at the delivery (test) mode fuse in the main fuse box. Then turn the ignition switch to ON (engine off) again, to confirm the low engine oil warning light turns off. Remove the spare fuse installed to finish. NOTE: The engine oil level switch is normal, if the low engine oil level warning light turns off with the delivery (test) mode fuse installed.	Go to step **4**.
4	**CHECK COMBINATION METER.** Perform the self-diagnosis of combination meter to check if there are any faults in the combination meter. <Ref. to IDI-6, OPERATION, Combination Meter System.>	Is combination meter OK?	Go to step **5**.	Replace the combination meter. <Ref. to IDI-21, REMOVAL, Combination Meter.>
5	**CHECK SECURE CONNECTION OF CONNECTOR BETWEEN ENGINE HARNESS AND OIL LEVEL SWITCH.**	Is there any insecure connection?	Remedy the connection condition. Then, to turn off the low engine oil warning light, install the spare fuse at the delivery (test) mode fuse in the main fuse box. Then turn the ignition switch to ON (engine off) again, to confirm the low engine oil warning light turns off. Remove the spare fuse installed to finish. NOTE: The engine oil level switch is normal, if the low engine oil level warning light turns off with the delivery (test) mode fuse installed.	Go to step **6**.

GETthemANUALS.org

Step		Check	Yes	No
6	**CHECK OIL LEVEL SWITCH.** 1) Deliberately short circuits by connecting the engine harness connector terminal and chassis ground. 2) Turn the ignition switch to ON (engine OFF). 3) Read the current data for engine in the Subaru Select Monitor to confirm the item for "Oil level switch". <Ref. to EN(H6DO)(diag)-35, READ CURRENT DATA FOR ENGINE (NORMAL MODE), OPERATION, Subaru Select Monitor.> ***Connector & terminal*** ***(E130) No. 1 — Chassis ground:***	Is the "Oil level switch" signal displayed in Subaru Select Monitor HIGH?	Replace the oil level switch. <Ref. to LU(H6DO)-17, REMOVAL, Oil Level Switch.>	Go to step **7**.
7	**CHECK SECURE CONNECTION OF CONNECTOR BETWEEN BULKHEAD HARNESS AND ENGINE HARNESS.**	Is there any insecure connection?	Remedy the connection condition. Then, to turn off the low engine oil warning light, install the spare fuse at the delivery (test) mode fuse in the main fuse box. Then turn the ignition switch to ON (engine off) again, to confirm the low engine oil warning light turns off. Remove the spare fuse installed to finish. NOTE: The engine oil level switch is normal, if the low engine oil level warning light turns off with the delivery (test) mode fuse installed.	Go to step **8**.
8	**CHECK ENGINE HARNESS.** 1) Disconnect the connector on the oil level switch side for the engine harness. 2) Disconnect the connector on the bulkhead harness side for the engine harness. 3) Measure the resistance between connector terminals. ***Connector & terminal*** ***(E2) No. 16 — (E130) No. 1:***	Is the resistance less than 1 Ω?	Go to step **9**.	Repair or replace the open circuit of engine harness.

GETthemanuals.org

Step		Check	Yes	No
9	**CHECK SECURE CONNECTION OF CONNECTOR BETWEEN ENGINE CONTROL MODULE (ECM) AND BULKHEAD HARNESS.** Remove the glove box lid assembly. <Ref. to EI-66, REMOVAL, Glove Box.>	Is there any insecure connection?	Remedy the connection condition. Then, to turn off the low engine oil warning light, install the spare fuse at the delivery (test) mode fuse in the main fuse box. Then turn the ignition switch to ON (engine off) again, to confirm the low engine oil warning light turns off. Remove the spare fuse installed to finish. NOTE: The engine oil level switch is normal, if the low engine oil level warning light turns off with the delivery (test) mode fuse installed.	Go to step **10**.
10	**CHECK BULKHEAD HARNESS.** 1) Remove the glove box lid assembly. <Ref. to EI-66, REMOVAL, Glove Box.> 2) Disconnect the engine control module (ECM) side connector for the bulkhead harness. 3) Disconnect the engine harness connectors from the bulkhead harness. 4) Measure the resistance between connector terminals. ***Connector & terminal*** ***(B136) No. 26 — (B21) No. 16:***	Is the resistance less than 1 Ω?	Replace the engine control module (ECM). <Ref. to FU(H6DO)-54, REMOVAL, Engine Control Module (ECM).>	Repair or replace the open circuit of the bulkhead harness.

2. OTHER INSPECTIONS

1) Check that the oil level switch does not have deformation, cracks, or damage.
2) Check the oil level switch installation part for oil leakage and oil seepage.

GETthemanuals.org

10. Engine Lubrication System Trouble in General

A: INSPECTION

Before performing diagnostics, make sure that the engine oil level is correct and no oil leakage exists.

Trouble	Possible cause	Corrective action
Warning light remains ON.	a. Oil pressure switch failure	
	❍ Cracked diaphragm or oil leakage within switch	Replace.
	❍ Broken spring or seized contacts	Replace.
	b. Low oil pressure	
	❍ Clogging of oil filter	Replace.
	❍ Malfunction of oil by-pass valve in oil filter	Replace.
	❍ Malfunction of oil relief valve in oil pump	Replace.
	❍ Clogged oil passage	Clean.
	❍ Excessive tip clearance and side clearance of oil pump rotor	Replace.
	❍ Clogged oil strainer or broken pipe	Clean or replace.
	c. No oil pressure	
	❍ Insufficient engine oil (degradation, etc.)	Replace.
	❍ Broken pipe of oil strainer	Replace.
	❍ Stuck oil pump rotor	Replace.
Warning light does not illuminate.	a. Defective combination meter	Replace.
	b. Poor contact of switch contact points	Replace.
	c. Disconnection of wiring	Repair.
Warning light flickers momentarily.	a. Defective terminal contact	Repair.
	b. Defective wiring harness	Repair.
	c. Oil pressure switch failure	
	❍ Cracked diaphragm or oil leakage within switch	Replace.
	❍ Broken spring or seized contacts	Replace.
	d. Low oil pressure	
	❍ Clogging of oil filter	Replace.
	❍ Malfunction of oil by-pass valve in oil filter	Replace.
	❍ Malfunction of oil relief valve in oil pump	Replace.
	❍ Clogged oil passage	Clean.
	❍ Excessive tip clearance and side clearance of oil pump rotor	Replace.
	❍ Clogged oil strainer or broken pipe	Clean or replace.

GETthemanuals.org

SPEED CONTROL SYSTEMS

SP(H6DO)

Page

1. General Description 2

GETtheMANUALS.org

1. General Description

A: SPECIFICATION

Specifications for the 3.6 L DOHC non-turbo model are the same as the 2.5 L SOHC non-turbo model.
<Ref. to SP(H4SO)-2, General Description.>

GETtheMANUALS.org

IGNITION

IG(H6DO)

Page

1. General Description 2
2. Spark Plug 4
3. Ignition Coil 7

GETtheMANUALS.org

1. General Description

A: SPECIFICATION

Item			SPECIFICATION
Ignition coil	Type		FK0368
	Ignition system		Independent ignition coil
	Manufacturer		Diamond Electric
Spark plug	Manufacturer and type		NGK: SILFR6C11
	Thread size (diameter, pitch, length) mm		14, 1.25, 26.5
	Spark plug gap mm (in)	Standard	1.0 — 1.1 (0.039 — 0.043)
	Electrode		Iridium

B: COMPONENT

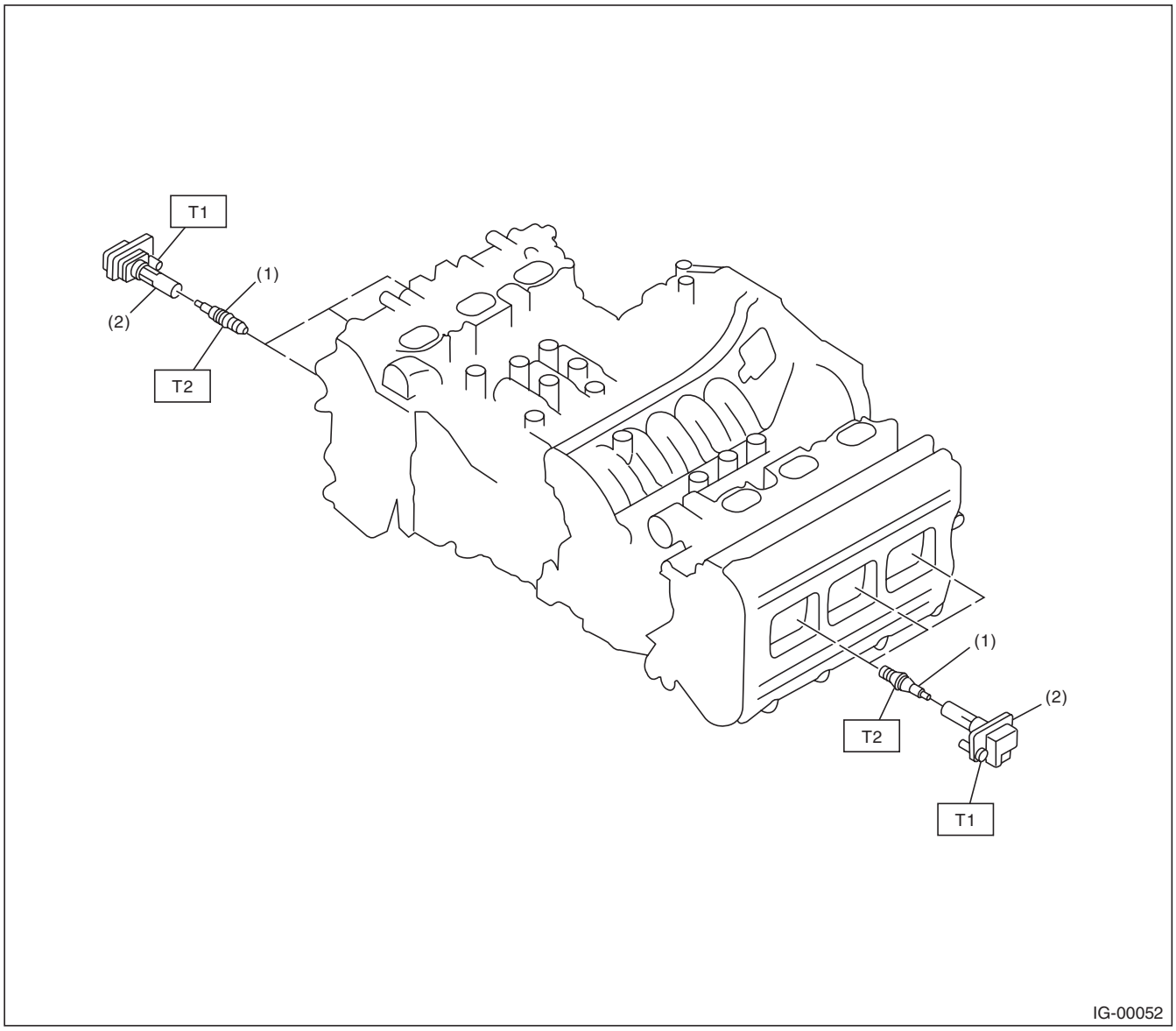

(1) Spark plug
(2) Ignition coil

Tightening torque:N·m (kgf-m, ft-lb)
T1: 16 (1.6, 11.8)
T2: 21 (2.1, 15.5)

GETtheMANUALS.org

C: CAUTION

- Wear appropriate work clothing, including a cap, protective goggles and protective shoes when performing any work.
- Remove contamination including dirt and corrosion before removal, installation or disassembly.
- Keep the disassembled parts in order and protect them from dust and dirt.
- Before removal, installation or disassembly, be sure to clarify the failure. Avoid unnecessary removal, installation, disassembly and replacement.
- Vehicle components are extremely hot after driving. Be wary of receiving burns from heated parts.
- Be sure to tighten fasteners including bolts and nuts to the specified torque.
- Place shop jacks or rigid racks at the specified points.
- Before disconnecting connectors of sensors or units, be sure to disconnect the ground cable from the battery.

GETtheMANUALS.org

2. Spark Plug

A: REMOVAL

Spark plug:
<Ref. to IG(H6DO)-2, SPECIFICATION, General Description.>

1. RH SIDE

1) Remove the collector cover.

NOTE:
Follow the steps below when removing the collector cover.
(1) Pull up the two points at the rear (A).
(2) Pull up the two points at the front (B) while moving them forward.

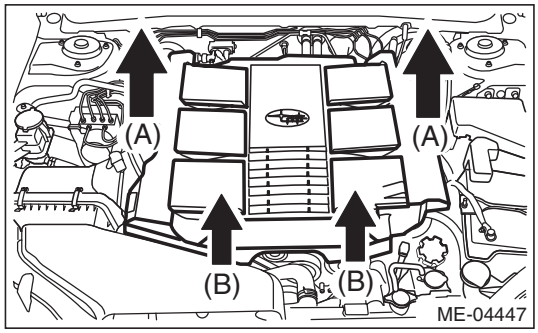

2) Disconnect the ground cable from battery.
3) Remove the air cleaner case. <Ref. to IN(H6DO)-5, REMOVAL, Air Cleaner Case.>
4) Remove the engine harness stay (A).
5) Disconnect the connector (B) from ignition coil.

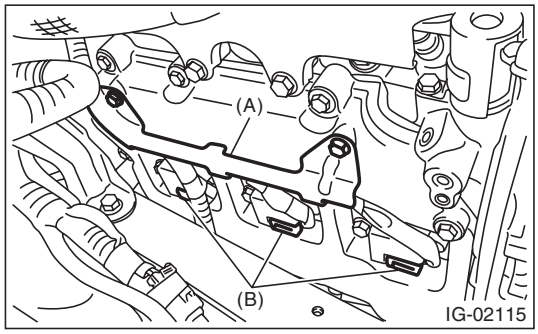

6) Remove the ignition coil.

NOTE:
Turn the #5 ignition coil to remove it.

7) Remove the spark plug with a spark plug socket.

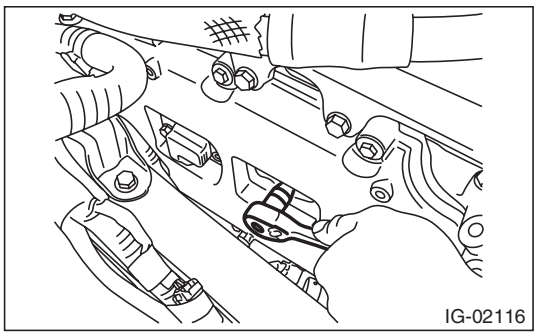

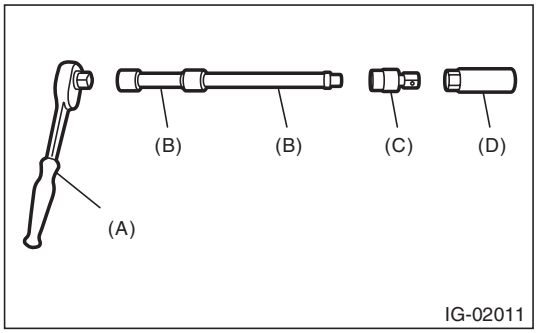

(A) Ratchet handle
(B) Extension bar
(C) Universal joint
(D) Spark plug socket

2. LH SIDE

1) Remove the collector cover.

NOTE:
Follow the steps below when removing the collector cover.
(1) Pull up the two points at the rear (A).
(2) Pull up the two points at the front (B) while moving them forward.

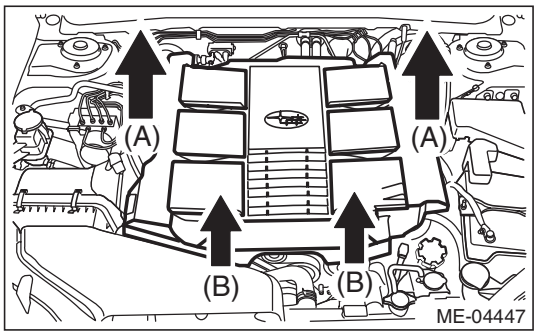

2) Remove the battery and battery carrier. <Ref. to SC(H4SO)-28, REMOVAL, Battery.>
3) Remove the engine harness stay (A).

GETtheMANUALS.org

4) Disconnect the connector (B) from ignition coil.

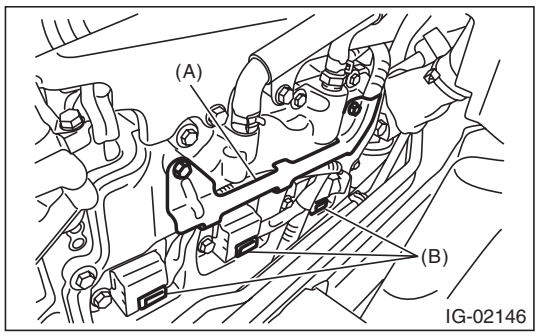

5) Remove the ignition coil.

NOTE:
Turn the #6 ignition coil to remove it.

6) Remove the spark plug with a spark plug socket.

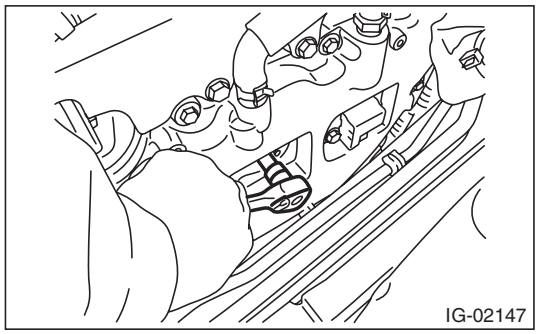

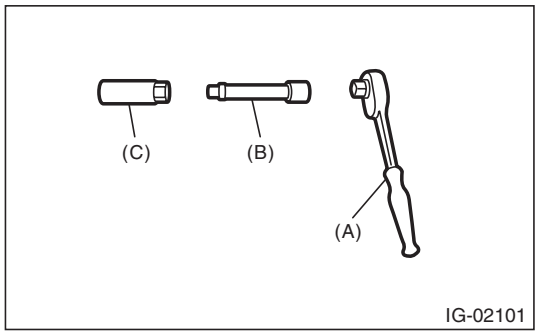

(A) Ratchet handle
(B) Extension bar
(C) Spark plug socket

B: INSTALLATION

1. RH SIDE

Install in the reverse order of removal.

Tightening torque:
Spark plug
21 N·m (2.1 kgf-m, 15.5 ft-lb)
Ignition coil
16 N·m (1.6 kgf-m, 11.8 ft-lb)
Engine harness stay
6.4 N·m (0.7 kgf-m, 4.7 ft-lb)

2. LH SIDE

Install in the reverse order of removal.

Tightening torque:
Spark plug
21 N·m (2.1 kgf-m, 15.5 ft-lb)
Ignition coil
16 N·m (1.6 kgf-m, 11.8 ft-lb)
Engine harness stay
6.4 N·m (0.7 kgf-m, 4.7 ft-lb)

C: INSPECTION

1) Check the spark plug for abnormalities. If defective, replace the spark plug.

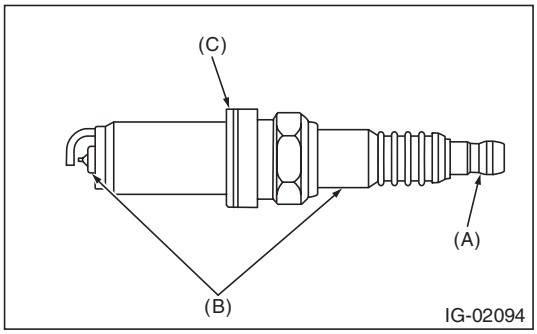

(A) Terminal damage
(B) Crack or damage in insulator
(C) Damaged gasket

2) Check the spark plug electrode and condition of the insulator. If abnormal, check and repair the cause and replace the spark plug.

(1) Normal:
Brown to grayish-tan deposits and slight electrode wear indicate correct spark plug heat range.

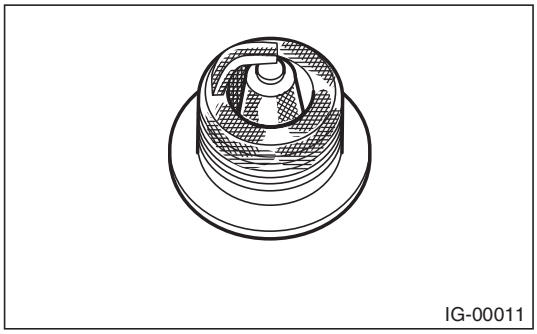

GETtheMANUALS.org

(2) Carbon fouled:
Dry fluffy carbon deposits on insulator and electrode are mostly caused by slow speed driving in the city, weak ignition, too rich fuel mixture, etc.

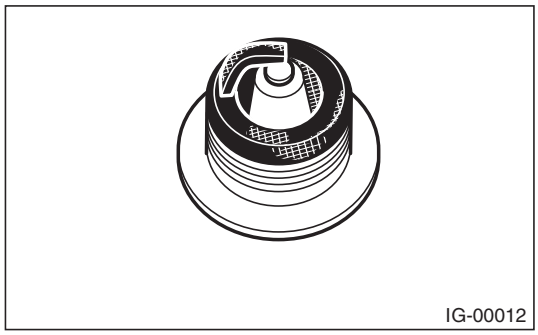
IG-00012

(3) Oil fouled:
Wet black deposits show oil entrance into combustion chamber through worn piston rings or increased clearance between valve guides and valve stems.

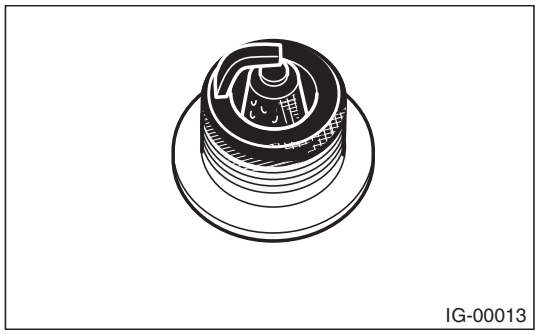
IG-00013

(4) Overheating:
White or light gray insulator with black or brown spots and bluish burnt electrodes indicate engine overheating, wrong selection of fuel, or loose spark plugs.

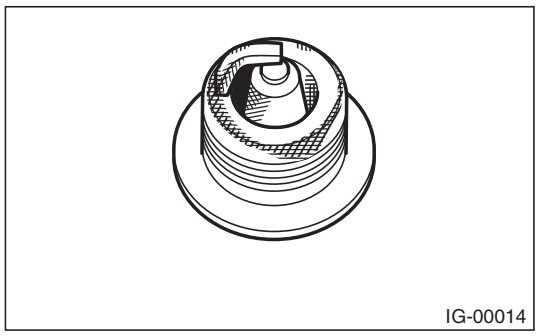
IG-00014

3) Using a nylon brush, etc., clean and remove the carbon or oxide deposits from the spark plug. If deposits are too stubborn, replace the spark plugs. After cleaning the spark plugs, check the spark plug gap “L” using a gap gauge. If it is not within the standard, replace the spark plug.

NOTE:
- Never use a plug cleaner.
- Do not use a metal brush as it may damage the electrode area.

Spark plug gap L:
Standard
1.0 — 1.1 mm (0.039 — 0.043 in)

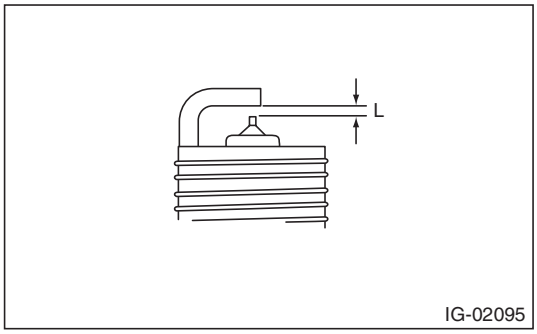

IG-02095

GETtheMANUALS.org

3. Ignition Coil

A: REMOVAL

Direct ignition type has been adopted. Refer to “Spark Plug” for removal procedure. <Ref. to IG(H6DO)-4, REMOVAL, Spark Plug.>

B: INSTALLATION

Install in the reverse order of removal.

Tightening torque:
16 N·m (1.6 kgf-m, 11.8 ft-lb)

C: INSPECTION

For inspection procedure, refer to “Diagnostics for Engine Starting Failure”. <Ref. to EN(H6DO)(diag)-77, IGNITION CONTROL SYSTEM, Diagnostics for Engine Starting Failure.>

GETtheMANUALS.org

GETtheMANUALS.org

STARTING/CHARGING SYSTEMS

SC(H6DO)

Page
1. General Description 2

GETtheMANUALS.org

1. General Description

A: SPECIFICATION

Specifications for the 3.6 L DOHC non-turbo model are included in the SC (H4SO) section. <Ref. to SC(H4SO)-2, General Description.>

GETtheMANUALS.org

ENGINE (DIAGNOSTICS)

EN(H6DO)(diag)

		Page
1.	Basic Diagnostic Procedure	2
2.	Check List for Interview	4
3.	General Description	6
4.	Electrical Component Location	9
5.	Engine Control Module (ECM) I/O Signal	18
6.	Engine Condition Data	27
7.	Data Link Connector	28
8.	General Scan Tool	29
9.	Subaru Select Monitor	35
10.	Read Diagnostic Trouble Code (DTC)	43
11.	Inspection Mode	44
12.	Drive Cycle	50
13.	Clear Memory Mode	57
14.	System Operation Check Mode	58
15.	Malfunction Indicator Light	59
16.	Diagnostics for Engine Starting Failure	70
17.	Diagnostic Procedure for Subaru Select Monitor Communication	83
18.	List of Diagnostic Trouble Code (DTC)	85
19.	Diagnostic Procedure with Diagnostic Trouble Code (DTC)	95
20.	General Diagnostic Table	381

GETtheMANUALS.org

1. Basic Diagnostic Procedure

A: PROCEDURE

1. ENGINE

Step		Check	Yes	No
1	**CHECK ENGINE START FAILURE.** 1) Ask the customer when and how the trouble occurred using the interview check list. <Ref. to EN(H6DO)(diag)-4, CHECK, Check List for Interview.> 2) Start the engine.	Does the engine start?	Go to step **2**.	Inspection using "Diagnostics for Engine Start Failure". <Ref. to EN(H6DO)(diag)-70, Diagnostics for Engine Starting Failure.>
2	**CHECK ILLUMINATION OF MALFUNCTION INDICATOR LIGHT.**	Does the malfunction indicator light illuminate?	Go to step **3**.	Inspection using "General Diagnostic Table". <Ref. to EN(H6DO)(diag)-381, INSPECTION, General Diagnostic Table.>
3	**CHECK COMMUNICATION STATUS.** 1) Turn the ignition switch to OFF. 2) Connect the Subaru Select Monitor or general scan tool to the data link connector. 3) Turn the ignition switch to ON, and run the Subaru Select Monitor or general scan tool. NOTE: • Subaru Select Monitor For detailed procedures, refer to "Subaru Select Monitor". <Ref. to EN(H6DO)(diag)-35, Subaru Select Monitor.> • General scan tool For detailed operation procedures, refer to the general scan tool operation manual.	Does Subaru Select Monitor or general scan tool communicate with vehicle normally?	Go to step **4**.	Inspection using "Diagnostics Procedure for Subaru Select Monitor Communication". <Ref. to EN(H6DO)(diag)-83, Diagnostic Procedure for Subaru Select Monitor Communication.>
4	**CHECK DTC.** Read DTC using Subaru Select Monitor or general scan tool. NOTE: • Subaru Select Monitor Refer to "Read Diagnostic Trouble Code" for detailed operation procedure. <Ref. to EN(H6DO)(diag)-43, Read Diagnostic Trouble Code (DTC).> • General scan tool For detailed operation procedures, refer to the general scan tool operation manual.	Is DTC displayed on Subaru Select Monitor or general scan tool?	Record the DTC. Repair the trouble cause. <Ref. to EN(H6DO)(diag)-85, List of Diagnostic Trouble Code (DTC).> Go to step **5**.	Repair the related parts. NOTE: If DTC is not shown on display although the malfunction indicator light illuminates, perform the diagnosis of malfunction indicator light circuit or combination meter. <Ref. to EN(H6DO)(diag)-59, Malfunction Indicator Light.>

GETTHEMANUALS.org

Step		Check	Yes	No
5	**CHECK FREEZE FRAME DATA.** Check the freeze frame data using the Subaru Select Monitor or general scan tool. NOTE: • Subaru Select Monitor For detailed procedures, refer to “Subaru Select Monitor”. <Ref. to EN(H6DO)(diag)-35, Subaru Select Monitor.> • General scan tool For detailed operation procedures, refer to the general scan tool operation manual.	Is freeze frame data displayed on Subaru Select Monitor or general scan tool?	Record the freeze frame data. Repair the cause of fault, and go to the next step. Go to step **6**.	Go to step **6**.
6	**PERFORM DIAGNOSIS.** 1) Perform the Clear Memory Mode. <Ref. to EN(H6DO)(diag)-57, Clear Memory Mode.> 2) Perform the Inspection Mode or Drive Cycle. <Ref. to EN(H6DO)(diag)-44, Inspection Mode.> <Ref. to EN(H6DO)(diag)-50, Drive Cycle.>	Is DTC displayed on Subaru Select Monitor or general scan tool?	Inspect using “Diagnostic Procedure with Diagnostic Trouble Code (DTC)”. <Ref. to EN(H6DO)(diag)-95, Diagnostic Procedure with Diagnostic Trouble Code (DTC).>	Finish the diagnosis.

GETtheMANUALS.org

2. Check List for Interview

A: CHECK

1. CHECK LIST NO. 1

Check the following item when problem has occurred.

NOTE:
Use copies of this page for interviewing customers.

Customer's name		Engine No.	
Date of purchase		Fuel type	
Date of repair		Odometer reading	km
V.I.N.			miles
Weather	❑ Fine ❑ Cloudy ❑ Rainy ❑ Snowy ❑ Various/Others:		
Ambient air temperature	°C (°F)		
	❑ Hot ❑ Warm ❑ Cool ❑ Cold		
Place	❑ Highway ❑ Suburbs ❑ Inner city ❑ Uphill ❑ Downhill ❑ Rough road ❑ Others:		
Engine temperature	❑ Cold ❑ Warming-up ❑ After warming-up ❑ Any temperature ❑ Others:		
Engine speed	rpm		
Vehicle speed	km/h (MPH)		
Driving conditions	❑ Not affected ❑ At starting ❑ While idling ❑ At racing ❑ While accelerating ❑ While cruising ❑ While decelerating ❑ While turning (RH/LH)		
Headlight	❑ ON/❑ OFF	Rear defogger	❑ ON/❑ OFF
Blower	❑ ON/❑ OFF	Audio	❑ ON/❑ OFF
A/C compressor	❑ ON/❑ OFF	Rear entertainment system	❑ ON/❑ OFF
Radiator fan	❑ ON/❑ OFF	Car phone	❑ ON/❑ OFF
Front wiper	❑ ON/❑ OFF	Wireless device	❑ ON/❑ OFF
Rear wiper	❑ ON/❑ OFF		

GETtheMANUALS.org

2. CHECK LIST NO. 2

Check the following item about the vehicle's state when the malfunction indicator light turns on.

NOTE:
Use copies of this page for interviewing customers.

a) Other warning lights or indicators illuminate: ❑ Yes / ❑ No
❑ Fuel level warning light ❑ Charge warning light ❑ Engine coolant temperature warning light ❑ Oil pressure warning light ❑ ATF temperature warning light or SPORT indicator light ❑ Driver's control center differential indicator light ❑ ABS warning light ❑ VDC warning light ❑ Cruise indicator light ❑ SI-CRUISE warning light ❑ Immobilizer indicator light ❑ STEERING warning light ❑ Glow indicator light ❑ Sedimenter warning light ❑ Electronic parking brake warning light ❑ Others:
b) Fuel level
• Lack of fuel: ❑ Yes / ❑ No • Indicator position of fuel gauge: • Experienced running out of fuel: ❑ Yes / ❑ No
c) Intentional connecting or disconnecting of harness connectors or spark plug cords: ❑ Yes / ❑ No
• What:
d) Intentional connecting or disconnecting of hoses: ❑ Yes / ❑ No
• What:
e) Installing of other parts except genuine parts: ❑ Yes / ❑ No
• What: • Where:
f) Occurrence of noise: ❑ Yes / ❑ No
• From where: • What kind:
g) Occurrence of smell: ❑ Yes / ❑ No
• From where: • What kind:
h) Intrusion of water into engine compartment or passenger compartment: ❑ Yes / ❑ No
i) Troubles occurred
❑ Engine does not start. ❑ Engine stalls during idling. ❑ Engine stalls while driving. ❑ Engine speed decreases. ❑ Engine speed does not decrease. ❑ Rough idling ❑ Poor acceleration ❑ Back fire ❑ After fire ❑ Does not shift. ❑ Excessive shift shock

GETTHEMANUALS.org

3. General Description

A: CAUTION

1) Airbag system wiring harness is routed near the ECM, main relay and fuel pump relay.

CAUTION:
- **Do not use electrical test equipment on the airbag system circuit.**
- **Be careful not to damage the airbag system wiring harness when servicing the ECM, TCM, main relay and fuel pump relay.**

2) Never connect the battery in reverse polarity. Doing so will damage the ECM instantly, and other parts will also be damaged.
3) Do not disconnect the battery terminals while the engine is running. A large counter electromotive force will be generated in the generator, and this voltage may damage electronic parts such as ECM etc.
4) Before disconnecting the connectors of each sensor and ECM, be sure to turn the ignition switch to OFF. Perform the Clear Memory Mode after connecting the connectors. <Ref. to EN(H6DO)(diag)-57, Clear Memory Mode.>
5) When measuring the voltage or resistance of individual sensor or all electrical control modules, use a tapered pin with a diameter of less than 0.6 mm (0.024 in). Do not insert the pin 4 mm (0.16 in) or more into the part.

CAUTION:
When replacing the ECM, be careful not to use the wrong spec. ECM to avoid any damage on the fuel injection system.

NOTE:
When replacing the ECM of the models with Immobilizer, immobilizer system must be registered. To do so, all ignition keys and ID cards need to be prepared. Refer to the “PC application help for Subaru Select Monitor”.
6) Take care not to allow water to get into the connectors when servicing or washing the vehicle in rainy weather. Avoid exposure to water even if the connectors are waterproof.
7) Use ECM mounting stud bolts at the body side grounding point when measuring voltage and resistance inside the passenger compartment.

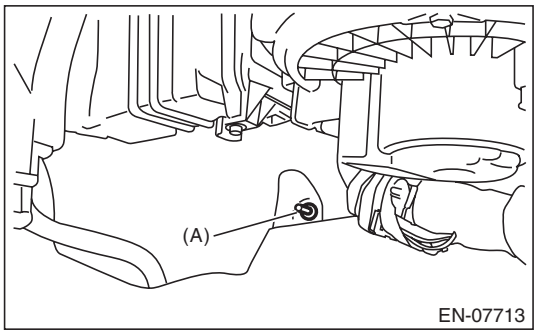

(A) Stud bolt

8) Use the engine ground terminal or engine assembly as the grounding point to chassis when measuring the voltage and resistance in engine compartment.

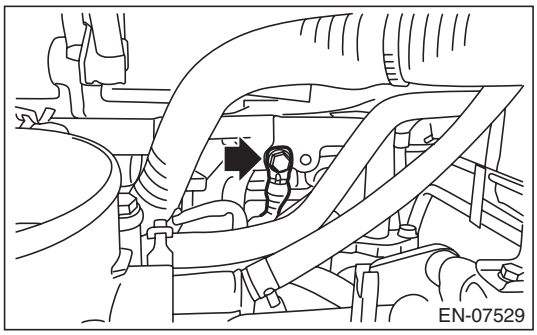

9) Every MFI-related part is a precision part. Do not drop them.
10) Observe the following cautions when installing a radio in vehicle.

CAUTION:
- **The antenna must be kept as far apart as possible from control module. (ECM is installed at the back of the glove box.)**
- **The antenna feeder must be placed as far apart as possible from the ECM and engine control system harness.**
- **Carefully adjust the antenna for correct matching.**
- **When mounting a large power type radio, pay special attention to the three items mentioned above.**
- **Incorrect installation of the radio may affect the operation of ECM.**

11) When disconnecting the fuel hose, release the fuel pressure. <Ref. to FU(H6DO)-59, RELEASING OF FUEL PRESSURE, PROCEDURE, Fuel.>

GETtheMANUALS.org

12) For the model with ABS, the ABS warning light may illuminate when performing driving test with jacked-up or lifted-up condition, but this is not a system malfunction. The reason for this is the speed difference between the front and rear wheels. When engine control system diagnosis is finished, perform the VDC memory clearance procedure of self-diagnosis function. <Ref. to VDC(diag)-25, Clear Memory Mode.>

B: INSPECTION

Before performing diagnostics, check the following item which might affect engine problems.

1. BATTERY

1) Measure the battery voltage and specific gravity of the electrolyte.

Standard voltage: 12 V

Specific gravity: 1.260 or more

2) Check the condition of the main and other fuses, and harnesses and connectors. Also check for proper grounding.

2. ENGINE GROUND

Make sure that the engine ground terminal is properly connected to the engine.

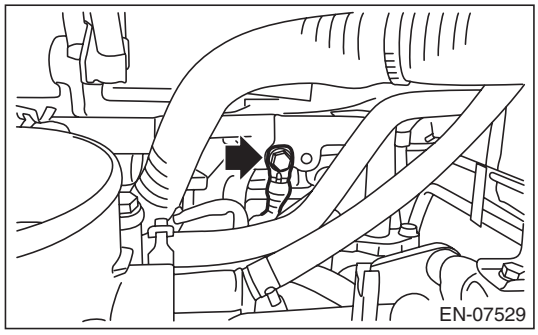

C: NOTE

- The on-board diagnostic (OBD) system detects and indicates a fault in various inputs and outputs of the complex electronic control. Malfunction indicator light in the combination meter indicates occurrence of a fault or trouble.
- Further, against such a failure of sensors as may disable the drive, the fail-safe function is provided to ensure the minimal drivability.
- The OBD system incorporated with the vehicles within this type of engine complies with OBD-II regulations. The OBD system monitors the components and the system malfunction listed in “Engine Section” which affects on emissions.
- When the system decides that a malfunction occurs, malfunction indicator light illuminates. At the same time of the malfunction indicator light illumination or blinking, a DTC and a freeze frame engine conditions are stored into on-board computer.
- The OBD system stores freeze frame engine condition data (engine load, engine coolant temperature, fuel trim, engine speed and vehicle speed, etc.) into on-board computer when it detects a malfunction.
- Freeze frame engine condition data are stored until the DTCs are cleared. However when such malfunctions as fuel trim fault and misfire are detected with the freeze frame engine condition data stored, they are rewritten into those related to the fuel trim fault and misfire.
- When the malfunction does not occur again for three consecutive driving cycles*, malfunction indicator light is turned off, but DTC remains at on-board computer.

*: One driving cycle means the period between the ignition switch ON and the ignition switch OFF after driving.

- When performing diagnosis, connect the Subaru Select Monitor or general scan tool to the vehicle.

GETTHEMANUALS.org

D: PREPARATION TOOL

ILLUSTRATION	TOOL NUMBER	DESCRIPTION	REMARKS
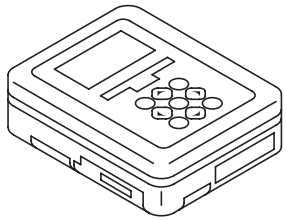 ST1B022XU0	1B022XU0	SUBARU SELECT MONITOR III KIT	Used for troubleshooting the electrical system.
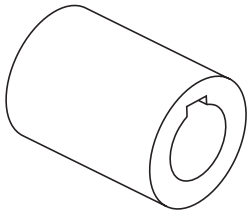 ST18252AA000	18252AA000	CRANKSHAFT SOCKET	Used for rotating crankshaft.

GETTHEMANUALS.org

4. Electrical Component Location

A: LOCATION

1. CONTROL MODULE

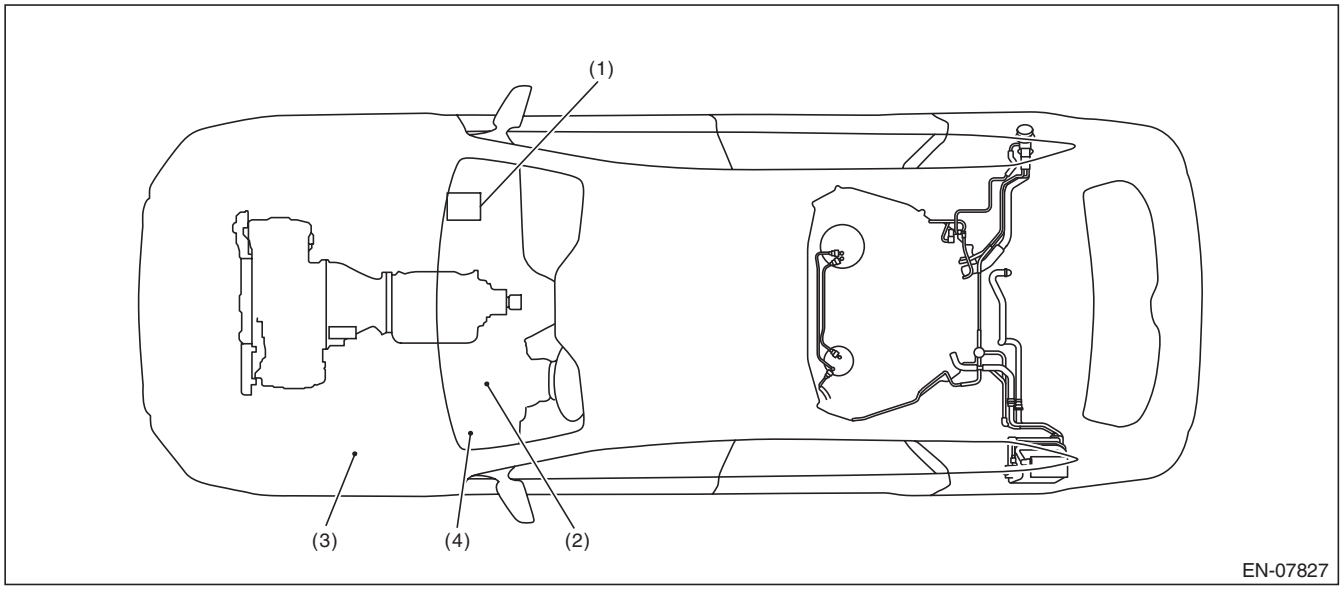

(1) Engine control module (ECM)
(2) Malfunction indicator light
(3) Delivery (test) mode fuse
(4) Data link connector

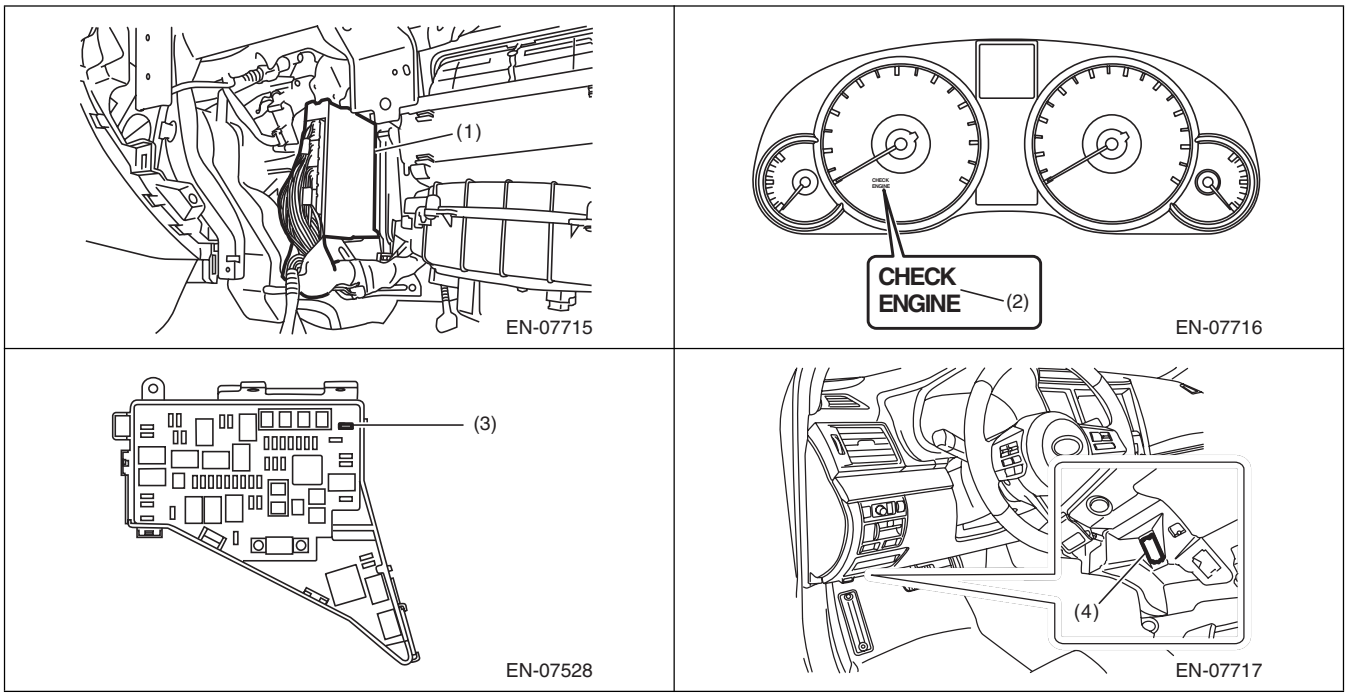

GETthemANUALS.org

2. SENSOR

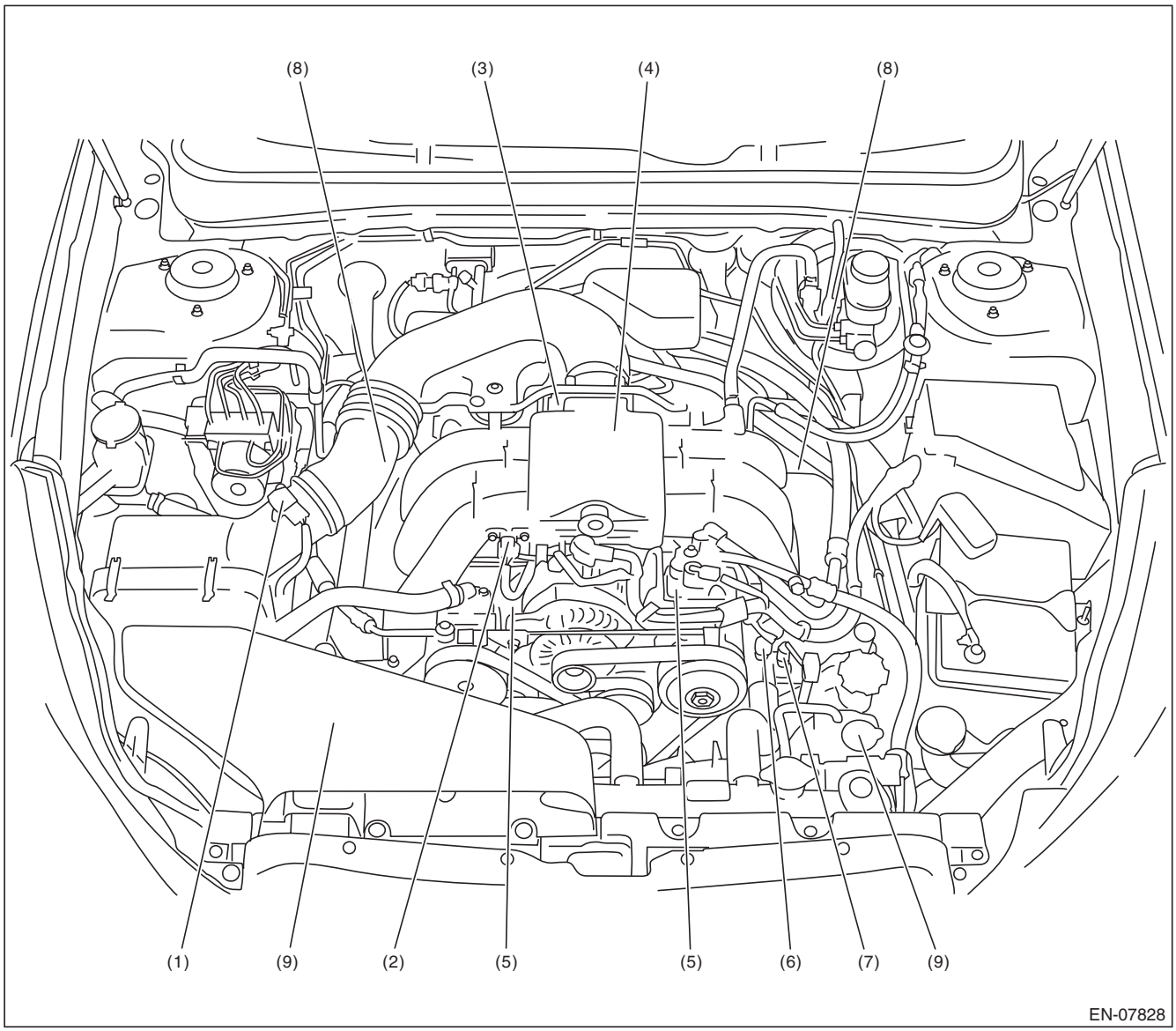

(1)	Mass air flow and intake air temperature sensor	(4)	Crankshaft position sensor	(7)	Engine oil temperature sensor
(2)	Manifold absolute pressure sensor	(5)	Knock sensor	(8)	Intake camshaft position sensor
(3)	Electronic throttle control	(6)	Engine coolant temperature sensor	(9)	Exhaust camshaft position sensor

GETmeMANUALS.org

Electrical Component Location

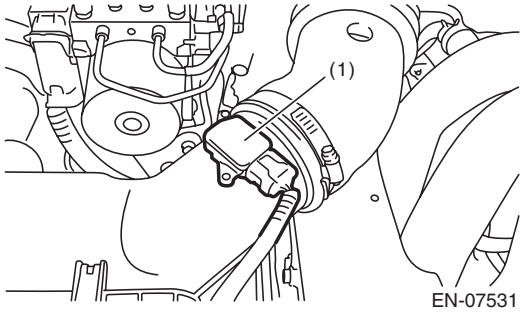

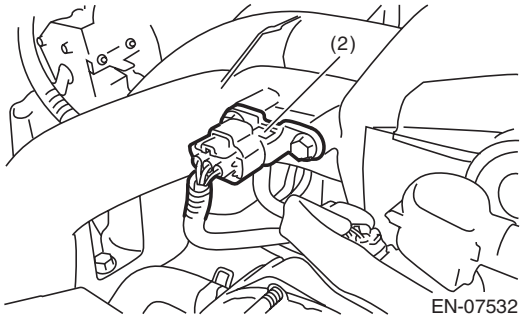

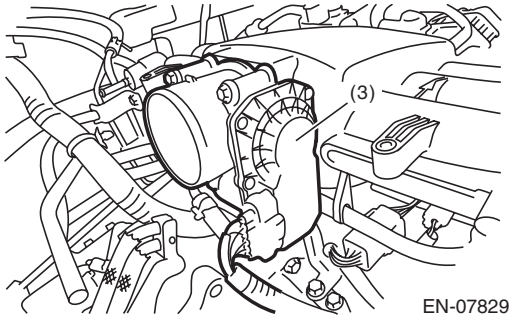

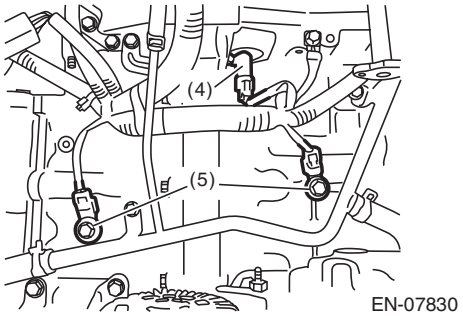

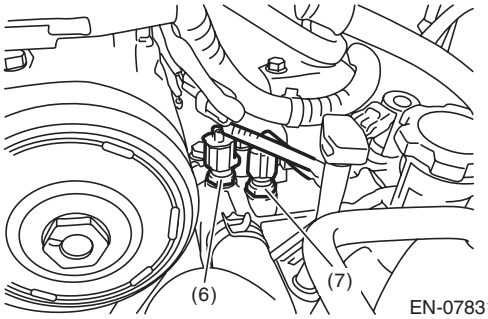

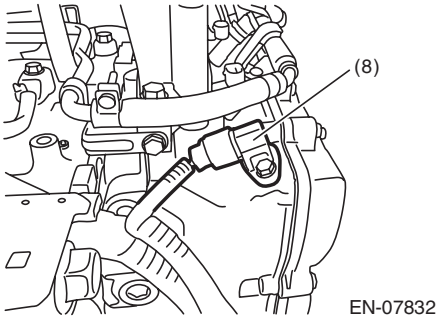

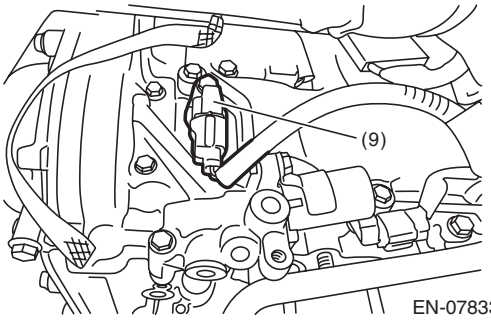

SUBARU.

GETtheMANUALS.com

Electrical Component Location

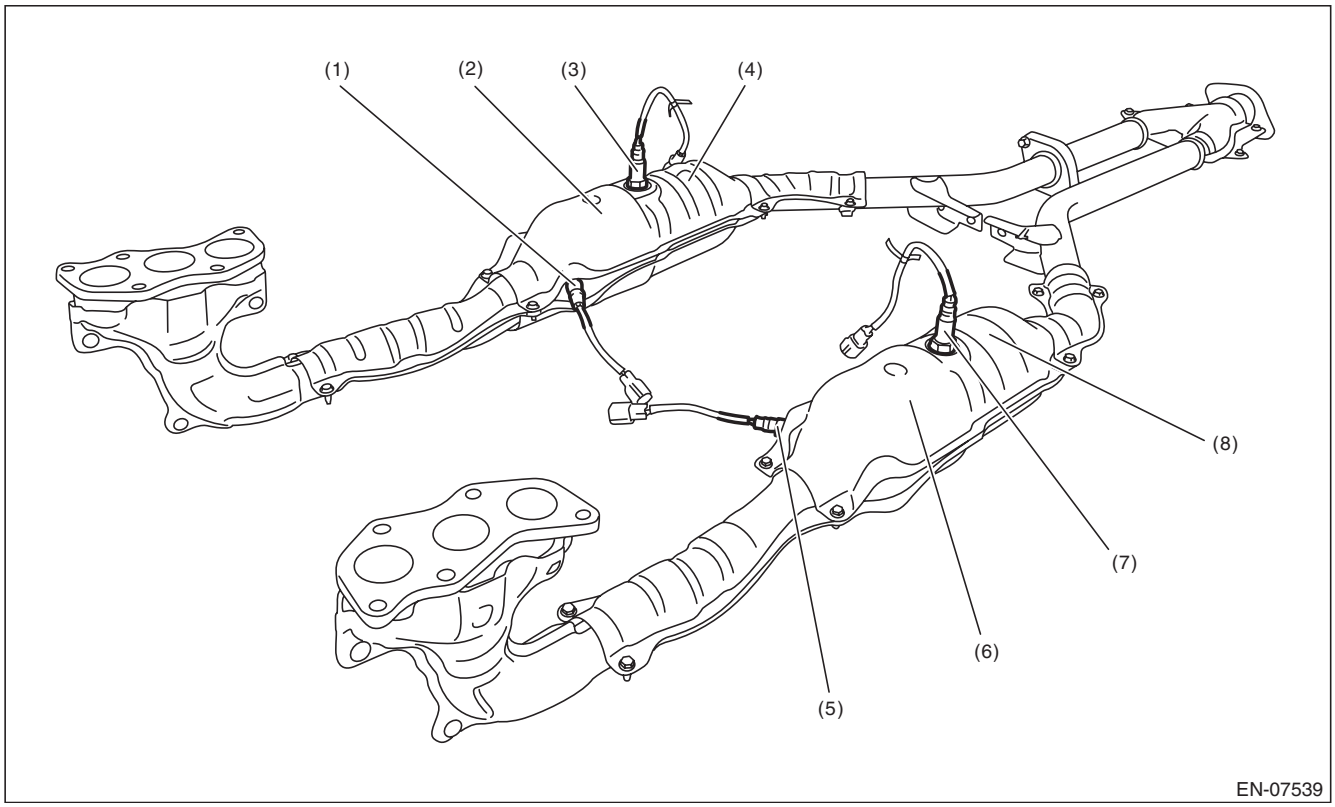

(1) Front oxygen (A/F) sensor RH
(2) Front catalytic converter RH
(3) Rear oxygen sensor RH
(4) Rear catalytic converter RH
(5) Front oxygen (A/F) sensor LH
(6) Front catalytic converter LH
(7) Rear oxygen sensor LH
(8) Rear catalytic converter LH

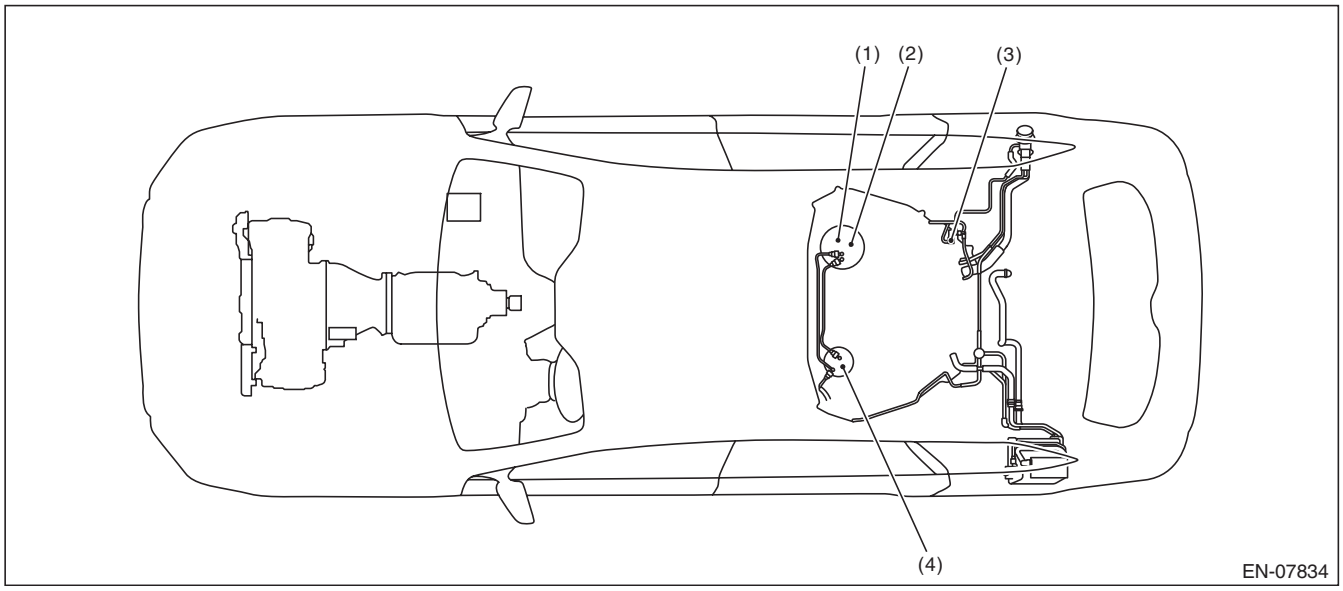

(1) Fuel level sensor
(2) Fuel temperature sensor
(3) Fuel tank pressure sensor
(4) Fuel sub level sensor

GETtheMANUALS.org

Electrical Component Location

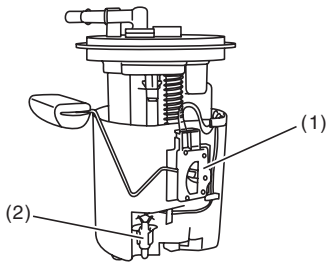

EN-07718

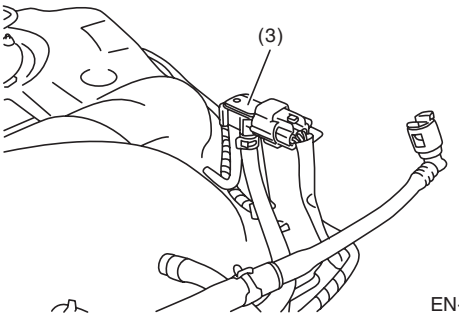

EN-07719

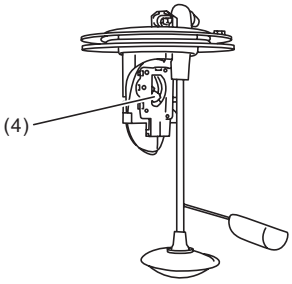

EN-07720

SUBARU.

GETmeMANUALS.org

3. SOLENOID VALVE, ACTUATOR, EMISSION CONTROL SYSTEM PARTS AND IGNITION SYSTEM PARTS

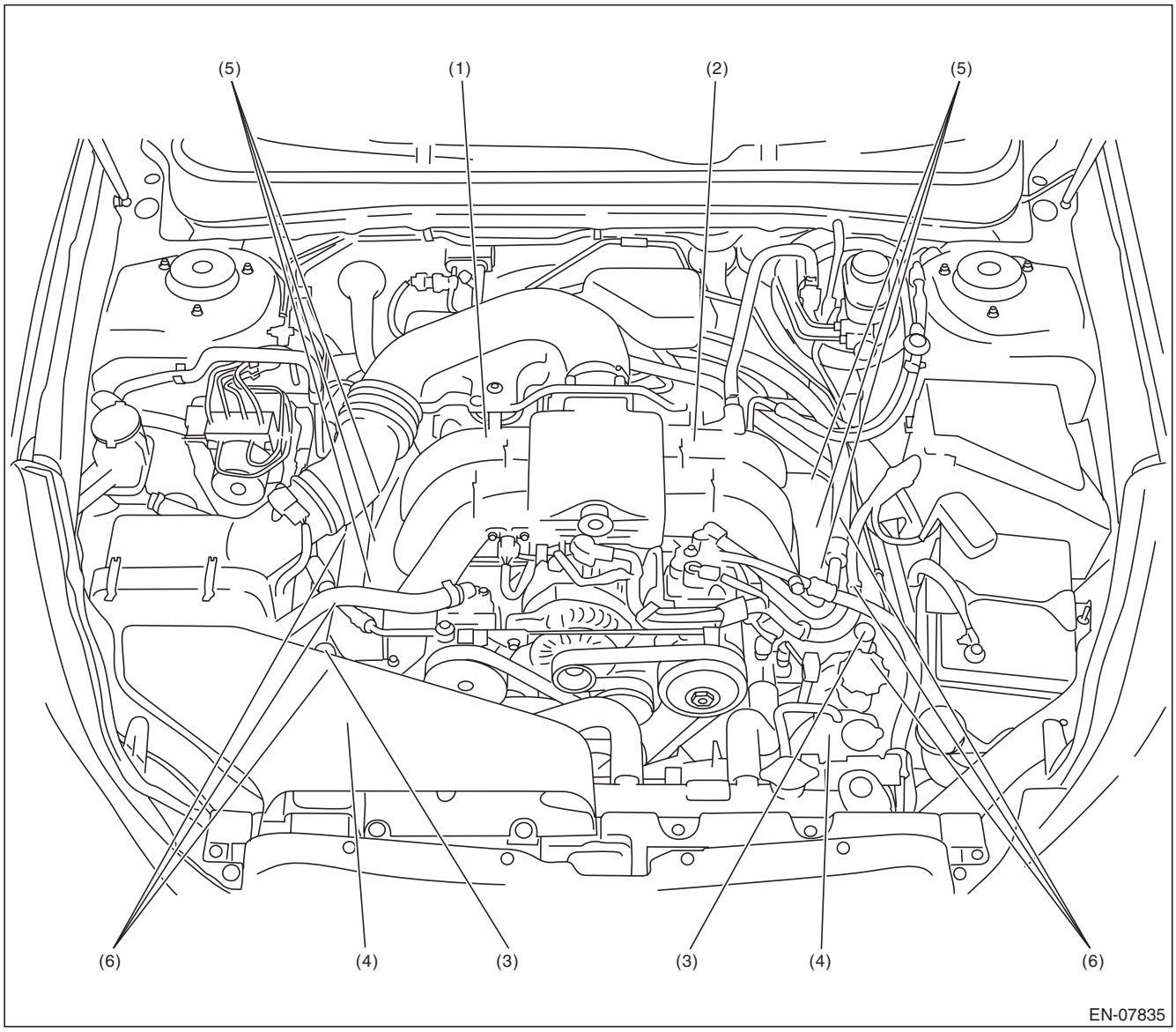

(1)	Purge control solenoid valve	(3)	Intake oil flow control solenoid valve	(5)	Fuel injector
(2)	EGR control valve	(4)	Exhaust oil flow control solenoid valve	(6)	Ignition coil

GETmeMANUALS.org

Electrical Component Location

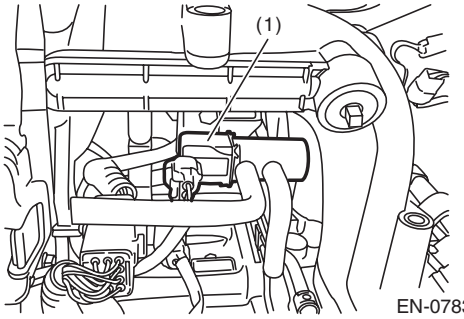

EN-07836

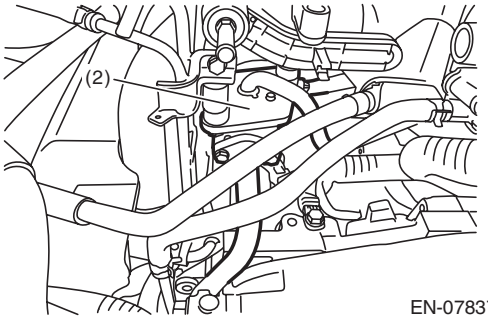

EN-07837

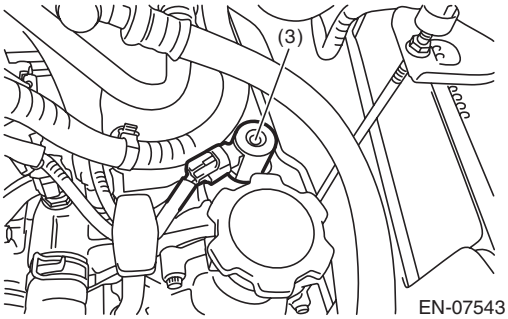

EN-07543

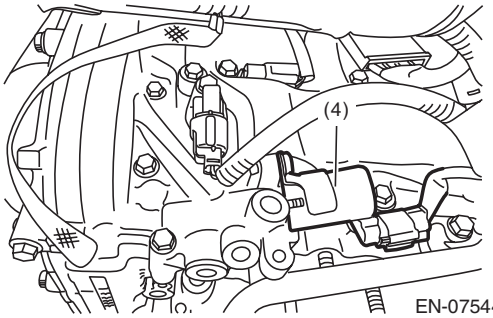

EN-07544

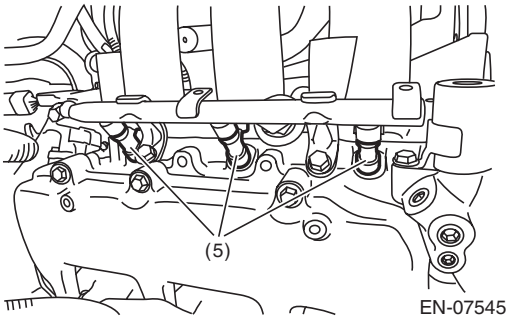

EN-07545

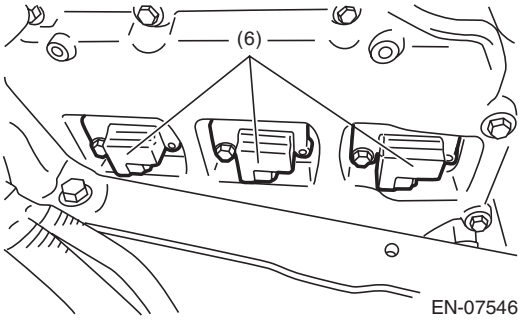

EN-07546

GETmeMANUALS.org

Electrical Component Location

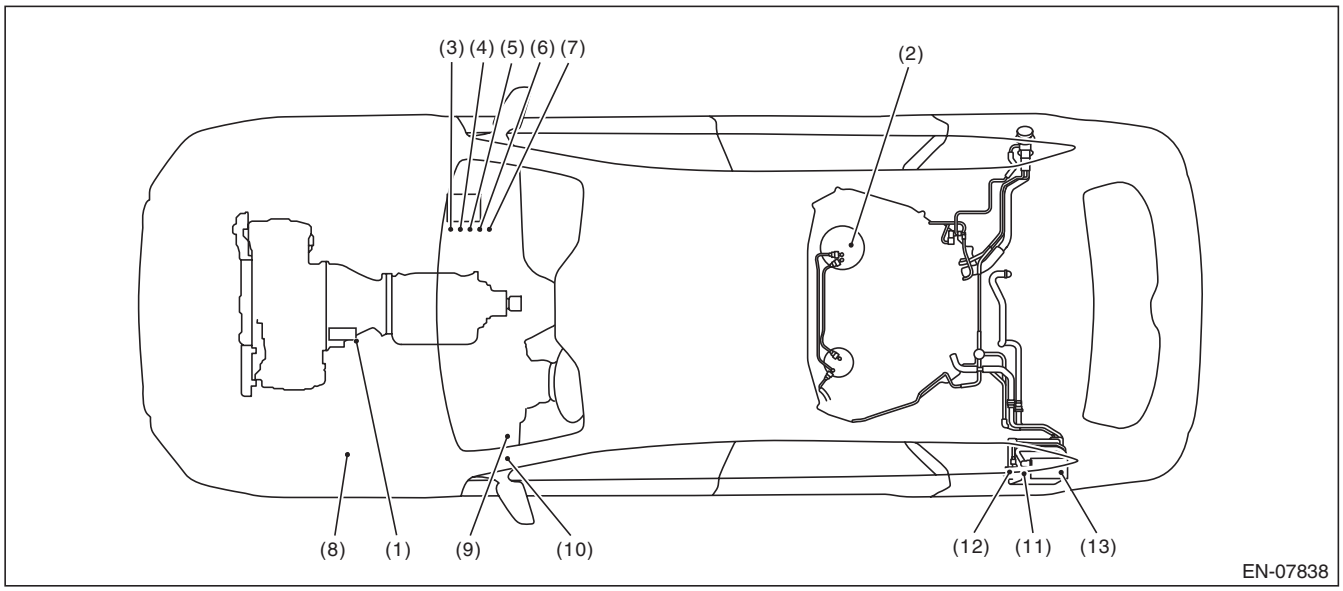

(1)	Starter	(6)	Electronic throttle control relay	(10)	Inhibitor relay
(2)	Fuel pump	(7)	Fuel pump relay	(11)	Canister
(3)	Main relay	(8)	Main fan relay	(12)	Drain valve
(4)	IG relay	(9)	Starter relay	(13)	Drain filter
(5)	A/F, oxygen sensor relay				

GETmeMANUALS.org

Electrical Component Location

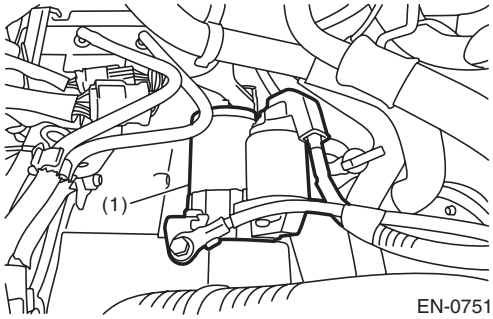

EN-07519

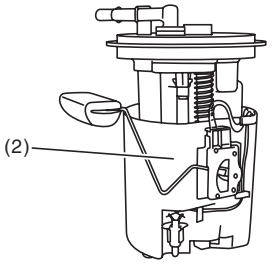

EN-07752

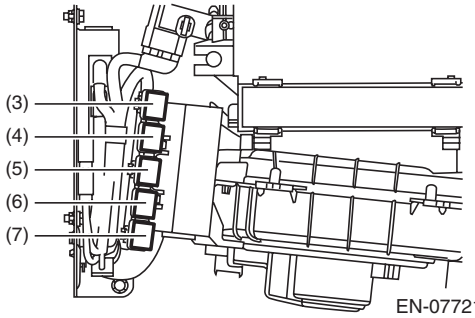

EN-07721

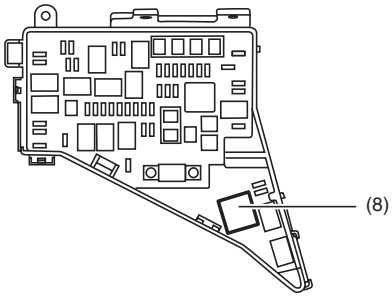

EN-07525

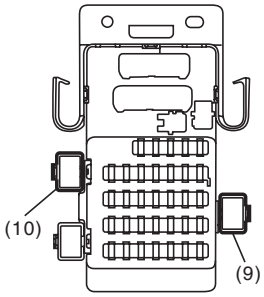

EN-07728

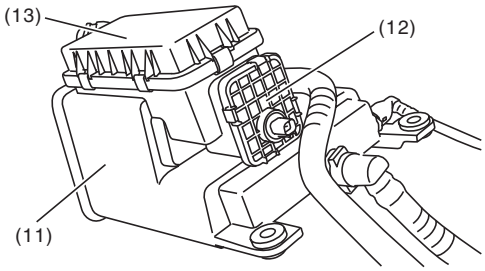

EN-07729

GETmeMANUALS.org

5. Engine Control Module (ECM) I/O Signal

A: ELECTRICAL SPECIFICATION

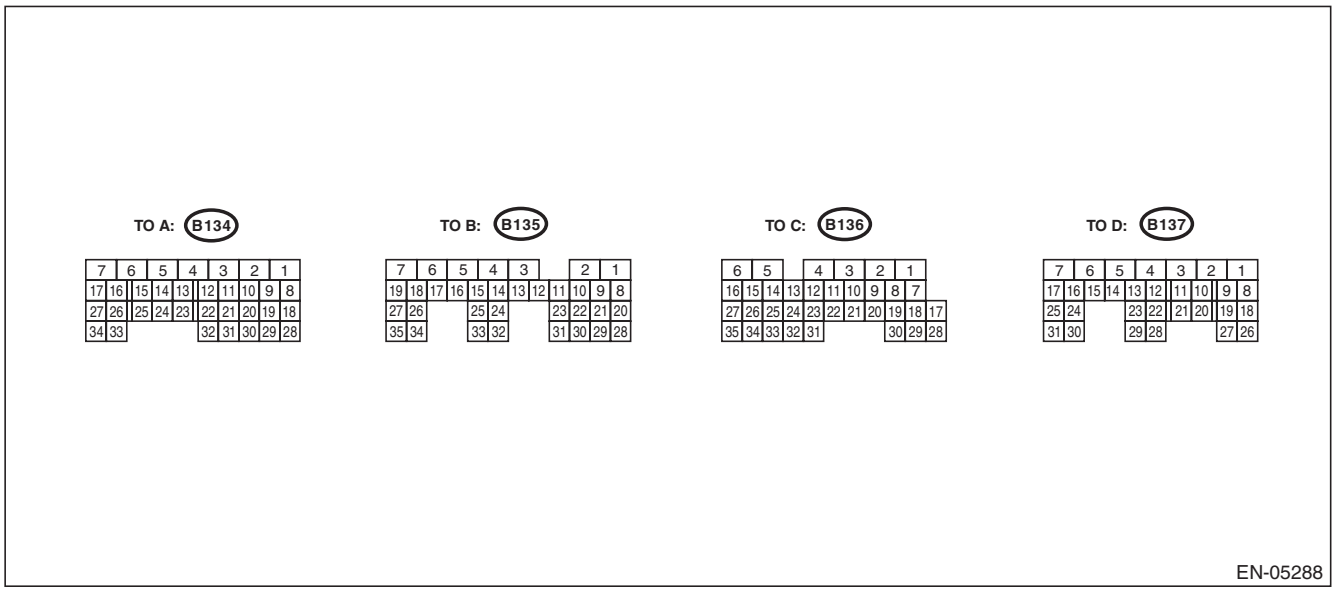

Description		Connector No.	Terminal No.	Signal (V)		Note
				Ignition SW ON (engine OFF)	Engine ON (idling)	
Crankshaft position sensor	Signal (+)	B137	17	0	–7 — +7	Waveform
	Signal (–)	B137	25	0	0	—
	Shield	B137	31	0	0	—
Intake camshaft position sensor (LH)		B137	16	0 or 5	0 or 5	Waveform
Intake camshaft position sensor (RH)		B137	24	0 or 5	0 or 5	Waveform
Exhaust camshaft position sensor (LH)		B137	29	0 or 5	0 or 5	Waveform
Exhaust camshaft position sensor (RH)		B137	23	0 or 5	0 or 5	Waveform
Camshaft position sensor ground		B137	30	0	0	—
Electronic throttle control	Main	B134	18	Approx. 0.9 (After engine is warmed up.)	Approx. 0.6 — 0.7 (After engine is warmed up.)	Fully closed: Approx. 0.6 Fully open: Approx. 4.0
	Sub	B134	28	Approx. 1.7 (After engine is warmed up.)	Approx. 1.5 — 1.6 (After engine is warmed up.)	Fully closed: Approx. 1.5 Fully open: Approx. 4.2
Electronic throttle control motor (+)		B134	2	Duty waveform	Duty waveform	Drive frequency: 500 Hz
Electronic throttle control motor (–)		B134	1	Duty waveform	Duty waveform	Drive frequency: 500 Hz
Electronic throttle control motor power supply		B135	7	10 — 13	12 — 14	—
Electronic throttle control motor relay		B135	17	ON: 0 OFF: 10 — 13	ON: 0 OFF: 12 — 14	When ignition switch is turned to ON: ON

GETmeMANUALS.org

Engine Control Module (ECM) I/O Signal

Description		Connector No.	Terminal No.	Signal (V)		Note
				Ignition SW ON (engine OFF)	Engine ON (idling)	
Accelerator pedal position sensor	Main sensor signal	B135	23	Fully closed: 1 Fully opened: 3.6	Fully closed: 1 Fully opened: 3.3	—
	Main power supply	B135	21	5	5	—
	Ground (main sensor)	B135	29	0	0	—
	Sub sensor signal	B135	31	Fully closed: 1 Fully opened: 3.7	Fully closed: 1 Fully opened: 3.3	—
	Sub power supply	B135	22	5	5	—
	Ground (sub sensor)	B135	30	0	0	—
Engine coolant temperature sensor		B137	22	1.0 — 1.4	1.0 — 1.4	After engine is warmed up.
Starter switch		B136	16	0	0	Cranking: 8 — 14
Starter relay		B135	26	ON: 0 OFF: 10 — 13	ON: 0 OFF: 12 — 14	—
Ignition switch		B136	30	10 — 13	12 — 14	—
Neutral position switch		B136	35	ON: 0 OFF: 12±0.5		Switch is ON when select lever is in “P” range or “N” range.
Delivery (test) mode switch		B136	34	10 — 13	12 — 14	When fuse is installed: 0
Knock sensor 1		B137	2	2.4	2.4	—
Knock sensor 2		B137	4	2.4	2.4	—
Knock sensor shield		B137	8	0	0	—
Back-up power supply		B136	2	10 — 13	12 — 14	Ignition switch “OFF”: 10 — 13
Control module power supply		B137	7	10 — 13	12 — 14	—
		B136	1	10 — 13	12 — 14	—
Sensor power supply		B134	19	5	5	—
Ignition control	#1	B134	21	0	0 or 5	Waveform
	#2	B134	22	0	0 or 5	Waveform
	#3	B134	31	0	0 or 5	Waveform
	#4	B134	32	0	0 or 5	Waveform
	#5	B134	25	0	0 or 5	Waveform
	#6	B134	26	0	0 or 5	Waveform
Fuel injector	#1	B134	10	10 — 13	1 — 14	Waveform
	#2	B134	11	10 — 13	1 — 14	Waveform
	#3	B134	12	10 — 13	1 — 14	Waveform
	#4	B134	13	10 — 13	1 — 14	Waveform
	#5	B134	23	10 — 13	1 — 14	Waveform
	#6	B134	24	10 — 13	1 — 14	Waveform
Radiator fan control		B135	11	ON: 0.5 or less OFF: 10 — 13	ON: 0.5 or less OFF: 12 — 14	—
Radiator fan control power supply		B135	12	ON: 0.5 or less OFF: 10 — 13	ON: 0.5 or less OFF: 12 — 14	—
Self-shutoff control		B135	13	0	0	—

GETmeMANUALS.org

Engine Control Module (ECM) I/O Signal

Description		Connector No.	Terminal No.	Signal (V)		Note
				Ignition SW ON (engine OFF)	Engine ON (idling)	
Malfunction indicator light		B135	33	—	—	C6 model Light “ON”: 1 or less Light “OFF”: 10 — 14
Engine speed output		B135	15	—	0 — 13 or more	Waveform
Purge control solenoid valve		B137	6	ON: 1 or less OFF: 10 — 13	ON: 1 or less OFF: 12 — 14	—
EGR control valve	Signal 1	B134	8	0 or 10 — 13	0 or 12 — 14	—
	Signal 2	B134	9	0 or 10 — 13	0 or 12 — 14	—
	Signal 3	B134	20	0 or 10 — 13	0 or 12 — 14	—
	Signal 4	B134	30	0 or 10 — 13	0 or 12 — 14	—
Manifold absolute pressure sensor		B137	20	3.5 — 4.8	1.1 — 1.9	—
Air flow sensor	Signal	B136	22	0.74	0.3 — 4.5	—
	Shield	B136	10	0	0	—
	Ground	B136	11	0	0	—
Intake air temperature sensor		B136	31	3.15 — 3.33	3.15 — 3.33	Ambient air temperature
Front oxygen (A/F) sensor LH	Signal (+)	B135	8	2.8 — 3.2	2.8 — 3.2	—
	Signal (–)	B135	20	2.4 — 2.7	2.4 — 2.7	—
	Shield	B136	9	0	0	—
Front oxygen (A/F) sensor heater LH	Signal 1	B135	2	12 — 14	—	Waveform
	Signal 2	B135	1	12 — 14	—	Waveform
Front oxygen (A/F) sensor RH	Signal (+)	B136	19	2.8 — 3.2	2.8 — 3.2	—
	Signal (–)	B136	18	2.4 — 2.7	2.4 — 2.7	—
	Shield	B136	9	0	0	—
Front oxygen (A/F) sensor heater RH	Signal 1	B136	6	12 — 14	—	Waveform
	Signal 2	B136	5	12 — 14	—	Waveform
Rear oxygen sensor LH	Signal	B135	28	0	0 — 0.9	—
	Shield	B136	9	0	0	—
Rear oxygen sensor heater LH signal		B135	5	12 — 14	—	Waveform
Rear oxygen sensor RH	Signal	B136	20	0	0 — 0.9	—
	Shield	B136	9	0	0	—
Rear oxygen sensor heater RH signal		B135	6	12 — 14	—	Waveform
Immobilizer communication		B135	25	—	—	—
Fuel pump control unit	Control	B136	33	0 or 5	0 or 5	Waveform
	Diagnostic signal	B135	10	0 or 10 — 13	12 — 14	—
Brake switch 1 (brake switch)		B136	15	When brake pedal is depressed: 0 When brake pedal is released: 10 — 13	When brake pedal is depressed: 0 When brake pedal is released: 12 — 14	—
Brake switch 2 (stop light switch)		B136	3	When brake pedal is depressed: 10 — 13 When brake pedal is released: 0	When brake pedal is depressed: 12 — 14 When brake pedal is released: 0	—

GETmeMANUALS.org

Engine Control Module (ECM) I/O Signal

Description		Connector No.	Terminal No.	Signal (V)		Note
				Ignition SW ON (engine OFF)	Engine ON (idling)	
Cruise control command switch		B136	12	When operating nothing: 3.5 — 4.5 When operating RES/ACC: 2.5 — 3.5 When operating vehicle distance setting: 1.5 — 2.5 When operating SET/COAST: 0.5 — 1.5 When operating CANCEL: 0 — 0.5	When operating nothing: 3.5 — 4.5 When operating RES/ACC: 2.5 — 3.5 When operating vehicle distance setting: 1.5 — 2.5 When operating SET/COAST: 0.5 — 1.5 When operating CANCEL: 0 — 0.5	—
Cruise control main switch		B136	13	ON: 0 OFF: 5	ON: 0 OFF: 5	—
Intake oil flow control solenoid valve LH	Signal (+)	B134	17	0	0.6	—
	Signal (–)	B134	16	0	0	—
Intake oil flow control solenoid valve RH	Signal (+)	B134	34	0	0.6	—
	Signal (–)	B134	27	0	0	—
Exhaust oil flow control solenoid valve LH	Signal (+)	B134	5	0	1.9	—
	Signal (–)	B134	14	0	0	—
Exhaust oil flow control solenoid valve RH	Signal (+)	B134	7	0	1.9	—
	Signal (–)	B134	15	0	0	—
Engine oil temperature sensor signal		B137	21	1.0 — 1.4	1.0 — 1.4	After engine is warmed up.
Oil level switch		B136	26	0	0	Oil level Low: 10 — 14
Power steering oil pressure switch		B137	28	ON: 1 or less OFF: 10 — 13	ON: 1 or less OFF: 12 — 14	—
SSM communication		B135	14	1 or less ←→ 4 or more	1 or less ←→ 4 or more	—
Clutch switch		B135	9	10 — 13	12 — 14	—
Ground	Sensor	B134	29	0	0	—
		B135	30	0	0	—
	Engine 1	B134	6	0	0	—
	Engine 2	B134	4	0	0	—
	Engine 3	B134	3	0	0	—
	Engine 4	B137	1	0	0	—
	Engine 5	B137	3	0	0	—
	Engine 6	B137	5	0	0	—
	Body	B136	4	0	0	—
CAN communication	(Hi)	B136	17	Pulse signal		—
	(Lo)	B136	28	Pulse signal		—
Fuel tank pressure sensor		B136	21	2.3 — 2.7	2.3 — 2.7	Value after detaching and attaching the fuel filler cap
Drain valve		B135	4	ON: 1 or less OFF: 10 — 13	ON: 1 or less OFF: 12 — 14	—
Fuel temperature sensor		B136	23	2.5 — 3.8	2.5 — 3.8	Ambient temperature: 25°C (77°F)

GETmeMANUALS.org

Engine Control Module (ECM) I/O Signal

Input/output name:
- Crankshaft position sensor
- Intake camshaft position sensor RH
- Intake camshaft position sensor LH
- Exhaust camshaft position sensor RH
- Exhaust camshaft position sensor LH

Measuring condition:
- After warming-up
- At idling

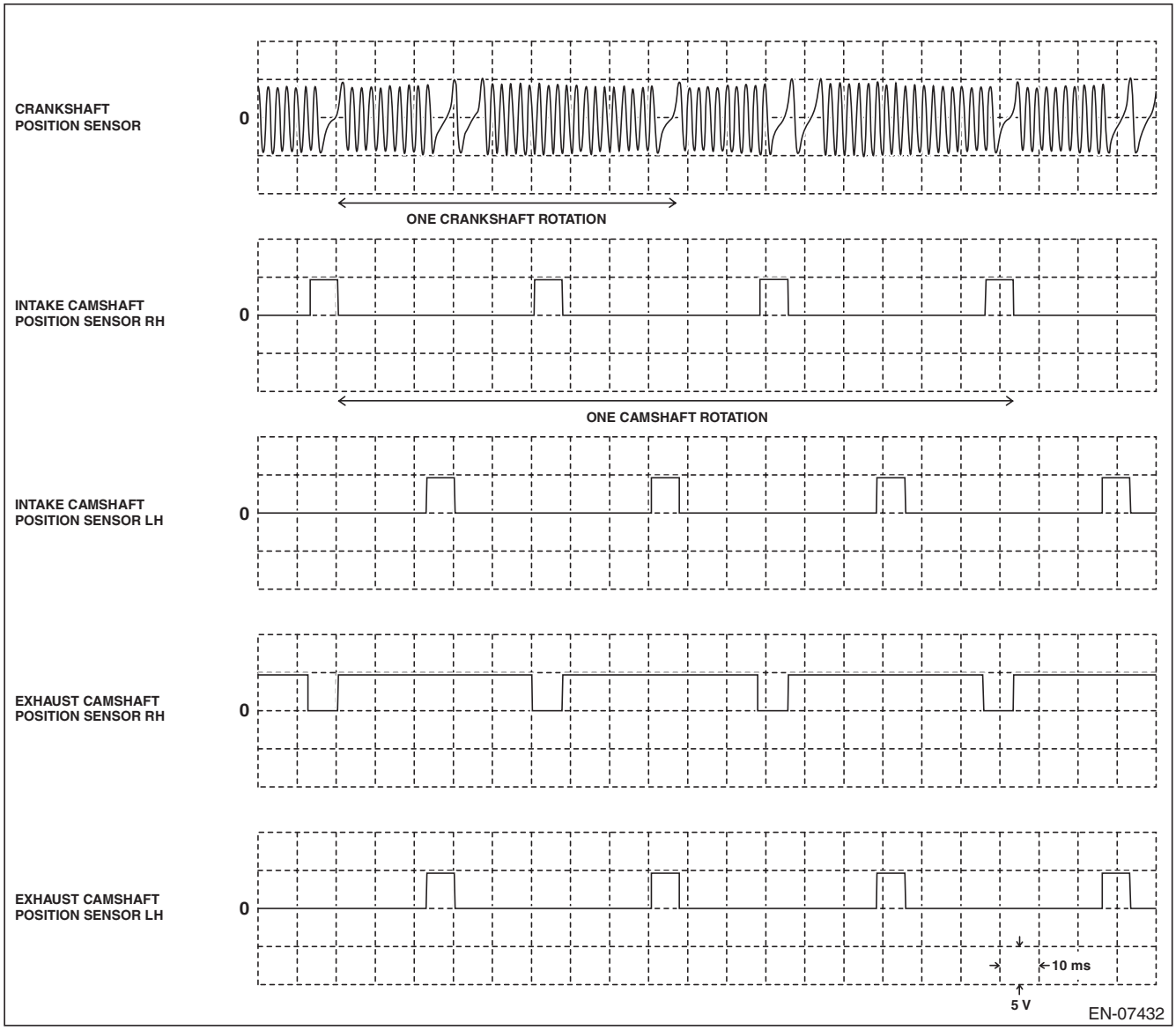

GETmeMANUALS.org

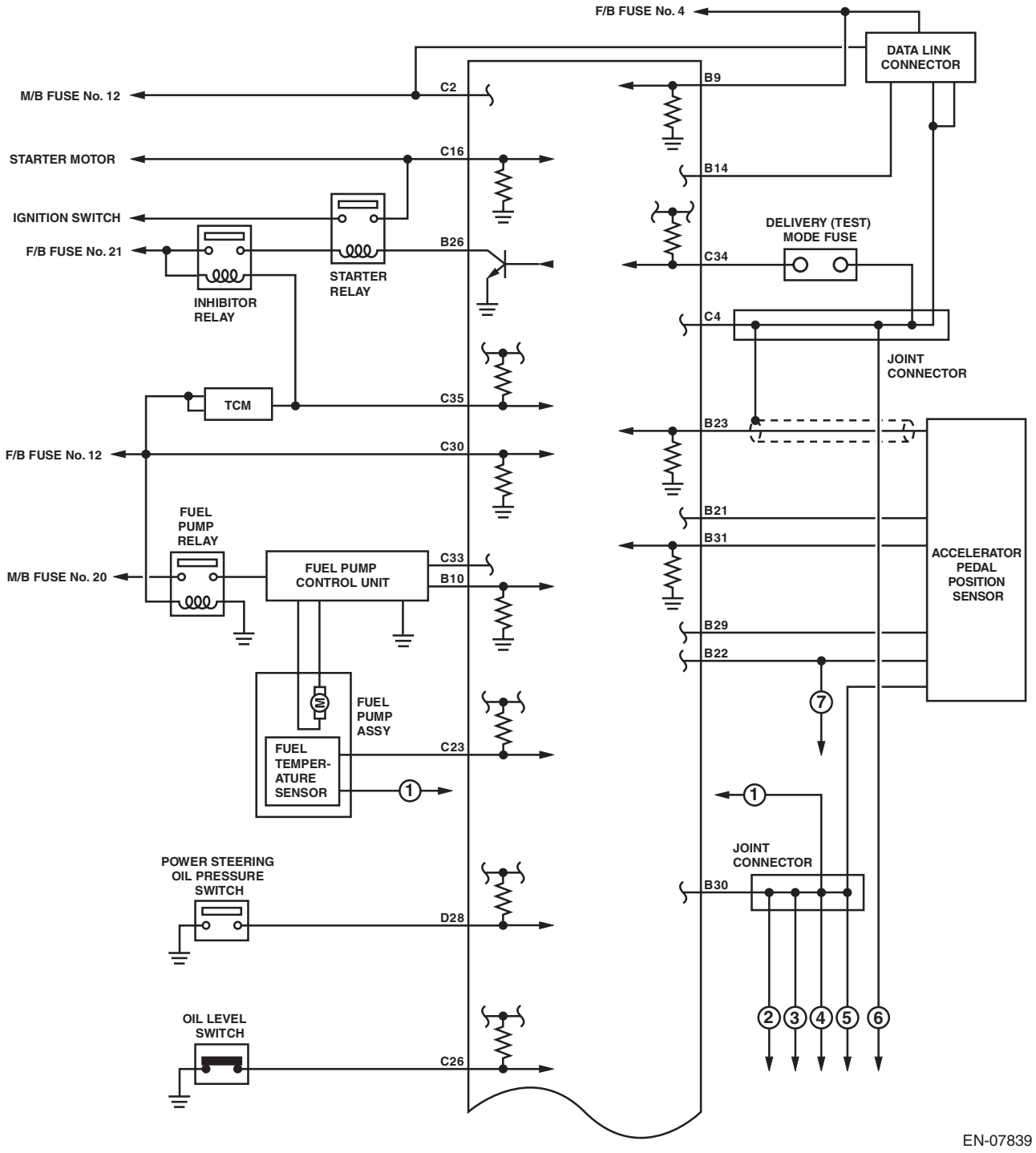

GETmeMANUALS.org

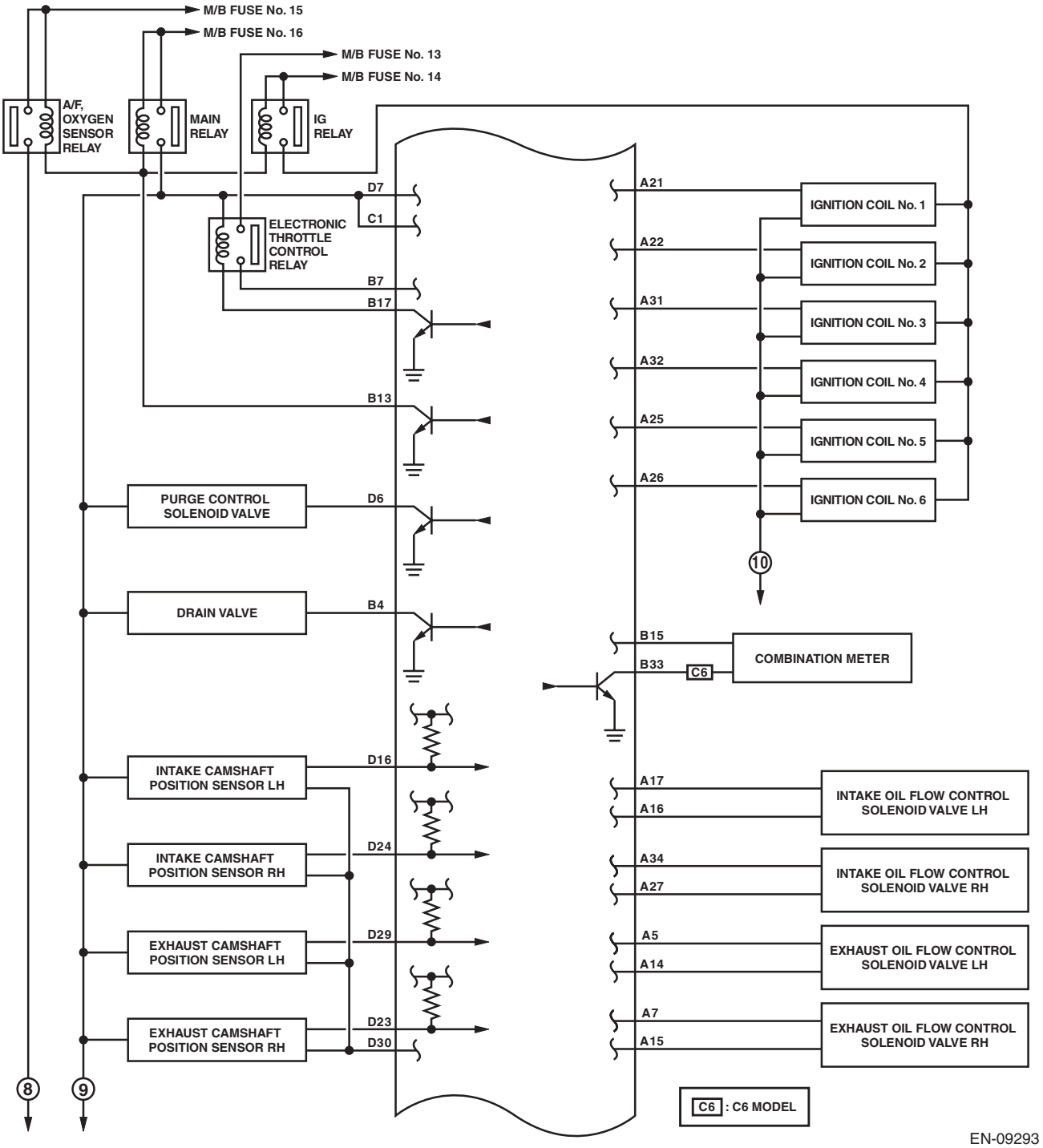

GETmeMANUALS.org

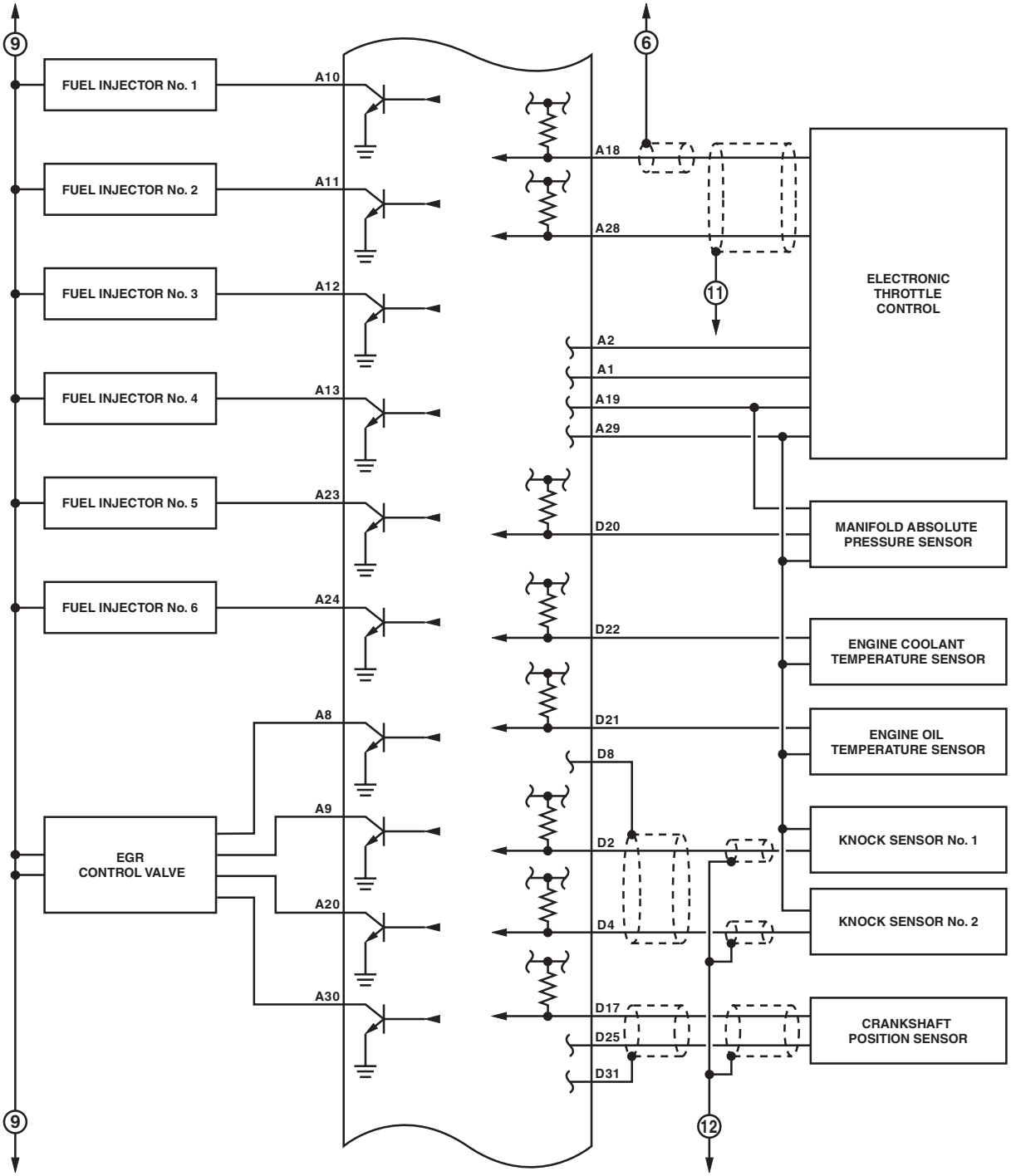

GETmeMANUALS.org

Engine Control Module (ECM) I/O Signal

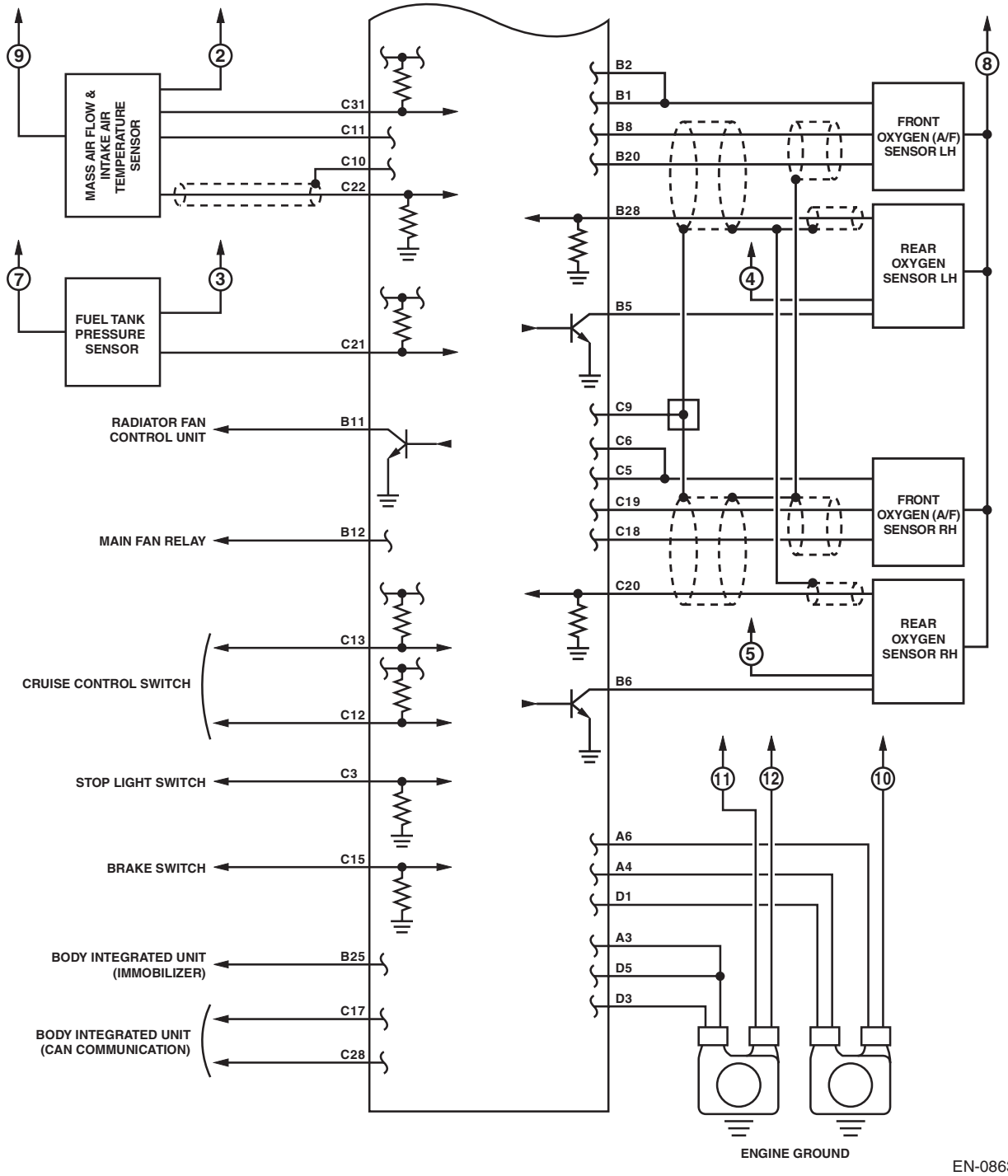

EN-08634

GETthemANSWERS.org

6. Engine Condition Data

A: ELECTRICAL SPECIFICATION

Contents	Specification
Engine load	17.9 — 38.8(%): Idling
	16.6 — 33.7(%): 2,500 rpm racing

Measuring condition:
- After engine is warmed up.
- Place the select lever in “P” range or “N” range.
- Turn the A/C to OFF.
- Turn all the accessory switches to OFF.

GETthemANSWERS.org

7. Data Link Connector

A: NOTE

This connector is used for Subaru Select Monitor.

CAUTION:
Do not connect any scan tools other than Subaru Select Monitor or general scan tool because the circuit for Subaru Select Monitor may be damaged.

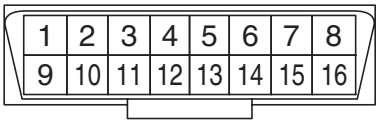

EN-07824

Terminal No.	Contents	Terminal No.	Contents
1	Empty	9	Empty
2	Empty	10	Empty
3	Empty	11	Empty
4	Ground	12	Empty
5	Ground	13	Empty
6	CAN communication (Hi)	14	CAN communication (Lo)
7	Subaru Select Monitor signal	15	Empty
8	Empty	16	Power supply

GETmeMANUALS.org

8. General Scan Tool

A: OPERATION

1. HOW TO USE GENERAL SCAN TOOL

1) Prepare a scan tool (general scan tool) required by SAE J1978.
2) Connect the general scan tool to data link connector located in the lower portion of the instrument panel (on the driver's side).

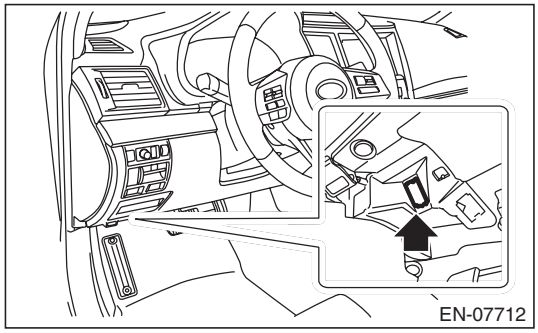

3) Using the general scan tool, call up each data. General scan tool functions consist of:
   (1) MODE $01: Current powertrain diagnostic data
   (2) MODE $02: Powertrain freeze frame data
   (3) MODE $03: Emission-related powertrain DTC
   (4) MODE $04: Clear/Reset emission-related diagnostic information
   (5) MODE $06: Request on-board monitoring test results for intermittently monitored systems
   (6) MODE $07: Request on-board monitoring test results for continuously monitored systems
   (7) MODE $09: Request vehicle information
4) Read out the data according to repair procedures. (For detailed operation procedure, refer to the general scan tool operation manual.)

NOTE:
For details concerning DTC, refer to "List of Diagnostic Trouble Code (DTC)". <Ref. to EN(H6DO)(diag)-85, List of Diagnostic Trouble Code (DTC).>

GETthemANSWERS.org

2. MODE $01 (CURRENT POWERTRAIN DIAGNOSTIC DATA)

Refer to data denoting the current operating condition of analog input/output, digital input/output or the powertrain system.
A list of the support data and PID (Parameter Identification) codes are shown in the following table.

PID	Data	Unit of measure
$01	Number of emission-related powertrain DTC and malfunction indicator light status	—
$03	Fuel system control status	—
$04	Calculated engine load value	%
$05	Engine coolant temperature	°C
$06	Short term fuel trim (Bank 1)	%
$07	Long term fuel trim (Bank 1)	%
$08	Short term fuel trim (Bank 2)	%
$09	Long term fuel trim (Bank 2)	%
$0B	Intake manifold absolute pressure	kPa
$0C	Engine speed	rpm
$0D	Vehicle speed	MPH
$0E	Ignition timing advance	°
$0F	Intake air temperature	°C
$10	Intake air amount	g/s
$11	Throttle valve opening angle	%
$13	Air fuel ratio sensor	—
$15	Oxygen sensor output voltage (Bank 1 Sensor 2)	V
$15	Oxygen sensor correction (Bank 1 Sensor 2)	%
$19	Oxygen sensor output voltage (Bank 2 Sensor 2)	V
$19	Oxygen sensor correction (Bank 2 Sensor 2)	%
$1C	On-board diagnostic system	—
$1F	Elapsed time after starting the engine	sec
$21	Travel distance after the malfunction indicator light illuminates	miles
$24	Oxygen sensor output voltage and short term fuel trim associated with oxygen sensor (Bank 1)	– and V
$28	Oxygen sensor output voltage and short term fuel trim associated with oxygen sensor (Bank 2)	– and V
$2C	Target EGR	%
$2D	EGR deviation	%
$2E	Evaporative purge	%
$2F	Fuel level	%
$30	Number of warm ups after DTC clear	—
$31	Travel distance after DTC clear	miles
$32	Fuel tank pressure	Pa
$33	Barometric pressure	kPa
$34	A/F sensor lambda value (Bank 1 Sensor 1)	—
$34	A/F sensor current value (Bank 1 Sensor 1)	mA
$38	A/F sensor lambda value (Bank 2 Sensor 1)	—
$38	A/F sensor current value (Bank 2 Sensor 1)	mA
$3C	Catalyst temperature #1	°C
$3D	Catalyst temperature #2	°C
$41	Diagnostic monitor of each drive cycle	—
$42	ECM power voltage	V
$43	Absolute load	%
$44	A/F target lambda	—
$45	Relative throttle opening angle	%
$46	Ambient temperature	°C
$47	Absolute throttle opening angle 2	%

GETmeMANUALS.org

PID	Data	Unit of measure
$49	Absolute accelerator opening angle 1	%
$4A	Absolute accelerator opening angle 2	%
$4C	Target throttle opening angle	%
$4D	Engine operating time while malfunction indicator light lit	min
$4E	Elapsed time after DTC clear	min
$51	Fuel used	—
$5A	Relative accelerator opening angle	%
$65	Neutral status	—

NOTE:
Refer to general scan tool manufacturer's operation manual to access current powertrain diagnostic data (MODE $01).

3. MODE $02 (POWERTRAIN FREEZE FRAME DATA)

Refer to data denoting the operating condition when trouble is sensed by the on-board diagnosis system. A list of the support data and PID (Parameter Identification) codes are shown in the following table.

PID	Data	Unit of measure
$02	DTC that caused the freeze frame data storage required by CARB	—
$03	Fuel system control status	—
$04	Calculated engine load value	%
$05	Engine coolant temperature	°C
$06	Short term fuel trim (Bank 1)	%
$07	Long term fuel trim (Bank 1)	%
$08	Short term fuel trim (Bank 2)	%
$09	Long term fuel trim (Bank 2)	%
$0B	Intake manifold absolute pressure	kPa
$0C	Engine speed	rpm
$0D	Vehicle speed	MPH
$0E	Ignition timing advance	°
$0F	Intake air temperature	°C
$10	Intake air amount	g/s
$11	Throttle valve opening angle	%
$13	Air fuel ratio sensor	—
$15	Oxygen sensor output voltage (Bank 1 Sensor 2)	V
$15	Oxygen sensor correction (Bank 2 Sensor 1)	%
$19	Oxygen sensor output voltage (Bank 2 Sensor 2)	V
$19	Oxygen sensor correction (Bank 2 Sensor 2)	%
$1C	On-board diagnostic system	—
$1F	Elapsed time after starting the engine	sec
$2C	Target EGR	%
$2D	EGR deviation	%
$2E	Evaporative purge	%
$2F	Fuel level	%
$32	Fuel tank pressure	Pa
$33	Atmospheric pressure	kPa
$42	ECM power voltage	V
$43	Absolute load	%
$44	A/F target lambda	—
$45	Relative throttle opening angle	%
$46	Ambient temperature	°C
$47	Absolute throttle opening angle 2	%

GETmeMANUALS.org

PID	Data	Unit of measure
$49	Absolute acceleration opening angle 1	%
$4A	Absolute acceleration opening angle 2	%
$4C	Target throttle opening angle	%
$65	Neutral status	—

NOTE:
Refer to general scan tool manufacturer's operation manual to access freeze frame data (MODE $02).

4. MODE $03 (EMISSION-RELATED POWERTRAIN DTC)

Refer to "List of Diagnostic Trouble Code (DTC)" for information about data denoting emission-related powertrain DTC. <Ref. to EN(H6DO)(diag)-85, List of Diagnostic Trouble Code (DTC).>

5. MODE $04 (CLEAR/RESET EMISSION-RELATED DIAGNOSTIC INFORMATION)

Refer to the mode used to clear or reset emission-related diagnostic information (OBD-II trouble diagnostic information).

NOTE:
- Refer to general scan tool manufacturer's instruction manual to clear the emission-related diagnostic information (MODE $04).
- Initial diagnosis of electronic throttle control is performed after memory clearance. Wait for 10 seconds or more after turning the ignition switch to ON, and then start the engine.

GETmeMANUALS.org

6. MODE $06

Refer to diagnostic value of troubleshooting and data of test limit indicated on the support data bit sequence table. A list of the support data is shown in the following table.

OBDMID	TID	SID	Diagnostic item
$01	$84	$1E	A/F sensor range failure (Bank 1 Sensor 1)
	$85	$1E	
	$86	$20	A/F sensor response failure (Bank 1 Sensor 1)
	$91	$20	
	$92	$10	
	$A3	$20	
	$A4	$10	
	$AC	$10	
	$AD	$10	
	$AE	$10	
	$AF	$10	
	$CD	$20	
	$CF	$20	
$02	$07	$0B	Oxygen sensor drop failure (Bank 1 Sensor 2)
	$08	$0B	
	$A5	$0B	
	$05	$10	Oxygen sensor response failure (Bank 1 Sensor 2)
	$06	$10	
	$D1	$10	Oxygen sensor delay failure (Bank 1 Sensor 2)
	$D2	$01	
$05	$84	$1E	A/F sensor range failure (Bank 2 Sensor 1)
	$85	$1E	
	$86	$20	A/F sensor response failure (Bank 2 Sensor 1)
	$91	$20	
	$92	$10	
	$A3	$20	
	$A4	$10	
	$AC	$10	
	$AD	$10	
	$AE	$10	
	$AF	$10	
	$CE	$20	
	$D0	$20	
$06	$07	$0B	Oxygen sensor drop failure (Bank 2 Sensor 2)
	$08	$0B	
	$A5	$0B	
	$05	$10	Oxygen sensor response failure (Bank 2 Sensor 2)
	$06	$10	
	$D1	$10	Oxygen sensor delay failure (Bank 2 Sensor 2)
	$D2	$01	
$21	$89	$20	Catalyst deterioration diagnosis (Bank 1)
$31	$8A	$FD	EGR system diagnosis
$35	$8B	$9D	VVT monitor (Bank 1)
	$8C	$9D	
	$8D	$9D	
	$8E	$9D	

GETmeMANUALS.org

OBDMID	TID	SID	Diagnostic item
$36	$8B	$9D	VVT monitor (Bank 2)
	$8C	$9D	
	$8D	$9D	
	$8E	$9D	
$39	$93	$FE	Evaporative emission control system (Cap off)
$3B	$94	$FE	Evaporative emission control system (0.04 inch leak)
	$95	$FE	
	$A6	$FE	
$3C	$96	$FE	Evaporative emission control system (0.02 inch leak)
	$C1	$FE	
	$C2	$FE	
	$C3	$FE	
	$C4	$FE	
	$C5	$FE	
	$C6	$35	
	$C7	$FE	
	$C8	$FE	
	$C9	$FE	
	$CA	$FE	
$3D	$98	$FE	Evaporative emission control system (Purge flow)
$41	$9B	$14	A/F sensor heater characteristics failure (Bank 1 Sensor 1)
$42	$A2	$24	Oxygen sensor heater characteristics failure (Bank 1 Sensor 2)
$45	$9B	$14	A/F sensor heater characteristics failure (Bank 2 Sensor 1)
$46	$A2	$24	Oxygen sensor heater characteristics failure (Bank 2 Sensor 2)
$A1	$0B	$24	Misfire monitoring (All cylinders)
	$0C	$24	
$A2	$0B	$24	Misfire monitoring (#1 cylinder)
	$0C	$24	
$A3	$0B	$24	Misfire monitoring (#2 cylinder)
	$0C	$24	
$A4	$0B	$24	Misfire monitoring (#3 cylinder)
	$0C	$24	
$A5	$0B	$24	Misfire monitoring (#4 cylinder)
	$0C	$24	
$A6	$0B	$24	Misfire monitoring (#5 cylinder)
	$0C	$24	
$A7	$0B	$24	Misfire monitoring (#6 cylinder)
	$0C	$24	

7. MODE $07

Refer to the data of DTC (pending code) for troubleshooting result about emission in the first time.

8. MODE $09

Refer to the data of vehicle specification (V.I.N., calibration ID, diagnosis frequency, etc.).

GETmeMANUALS.org

9. Subaru Select Monitor

A: OPERATION

1. HOW TO USE THE SUBARU SELECT MONITOR

NOTE:
For detailed operation procedures, refer to “PC application help for Subaru Select Monitor”.

2. READ CURRENT DATA FOR ENGINE (NORMAL MODE)

NOTE:
- For detailed operation procedures, refer to “PC application help for Subaru Select Monitor”.
- A list of the support data is shown in the following table.
- *: For models without cruise control, the brake switch signal does not change.

Content	Display	Unit of measure	Note (at idling)
Engine load	Engine Load	%	2.4%
Engine coolant temperature signal	Coolant Temperature	°C or °F	≥ 85°C or 185°F (after warm-up)
A/F correction #1	A/F Correction #1	%	–10% — +10%
A/F learning #1	A/F Learning #1	%	–10% — +10%
A/F correction #2	A/F Correction #2	%	–10% — +10%
A/F learning #2	A/F Learning #2	%	–10% — +10%
Intake manifold absolute pressure	Mani. Absolute Pressure	mmHg, kPa, inHg or psig	210 mmHg, 28 kPa, 8.3 inHg or 4.1 psig
Engine speed signal	Engine Speed	rpm	600 — 800 rpm (after warm-up)
Meter vehicle speed signal	Vehicle Speed	km/h or MPH	0 km/h or 0 MPH
Ignition timing signal	Ignition Timing	deg	13 — 15 deg
Intake air temperature signal	Intake Air Temp.	°C or °F	(Ambient air temperature)
Intake air amount	Mass Air Flow	g/s or lb/m	2.5 g/s — 5.0 g/s or 0.31 lb/m — 0.71 lb/m
Throttle opening angle signal	Throttle Opening Angle	%	2%
Front oxygen sensor voltage value 1	Front O2 Sensor #1	V	0.900 V
Front oxygen sensor voltage value 2	Front O2 Sensor #2	V	0.900 V
Battery voltage	Battery Voltage	V	12 — 13 V
Mass air flow voltage	Air Flow Sensor Voltage	V	1.2 — 1.3 V
Injection 1 pulse width	Fuel Injection #1 Pulse	ms	2.5 ms — 3.5 ms
Injection 2 pulse width	Fuel Injection #2 Pulse	ms	2.5 ms — 3.5 ms
Atmospheric pressure signal	Atmosphere Pressure	mmHg, kPa, inHg or psig	(Atmospheric pressure)
Intake manifold relative pressure	Mani. Relative Pressure	mmHg, kPa, inHg or psig	(Air intake absolute pressure — Atmospheric pressure)
Learned ignition timing	Learned Ignition Timing	deg	+0.0 deg
Acceleration opening angle signal	Accel. Opening Angle	%	0%
Fuel temperature signal	Fuel Temperature	°C or °F	+28°C or +82°F
Radiator fan output	Radiator Fan Control	%	0% (Water temperature 90°C (194°F) when air conditioner is OFF)
Purge control solenoid valve duty ratio	CPC Valve Duty Ratio	%	18%
Number of EGR steps	No. of EGR steps	STEP	0 STEP
Fuel pump duty ratio	Fuel Pump Duty	%	33%

GETthemANSWERS.org

Content	Display	Unit of measure	Note (at idling)
AVCS advance angle amount RH	VVT Adv. Ang. Amount R	deg	0 deg — +1 deg
AVCS advance angle amount LH	VVT Adv. Ang. Amount L	deg	0 deg — +1 deg
Oil flow control solenoid valve duty ratio RH	OCV Duty R	%	9.4%
Oil flow control solenoid valve duty ratio LH	OCV Duty L	%	9.4%
Oil flow control solenoid valve current RH	OCV Current R	mA	64 mA
Oil flow control solenoid valve current LH	OCV Current L	mA	64 mA
Front oxygen (A/F) sensor current value 1	A/F Sensor #1 Current	mA	0.0 mA
Front oxygen (A/F) sensor current value 2	A/F Sensor #2 Current	mA	0.0 mA
Front oxygen (A/F) sensor resistance value 1	A/F Sensor #1 Resistance	Ω	31 Ω
Front oxygen (A/F) sensor resistance value 2	A/F Sensor #2 Resistance	Ω	31 Ω
Front oxygen (A/F) sensor output lambda 1	A/F Sensor #1	—	1.01
Front oxygen (A/F) sensor output lambda 2	A/F Sensor #2	—	1.01
A/F correction #3	A/F Correction #3	%	0% — 1%
A/F learning #3	A/F Learning #3	%	0.0%
Throttle motor duty	Throttle Motor Duty	%	–20% — +20%
Throttle motor voltage	Throttle Motor Voltage	V	(Battery voltage)
Sub throttle sensor voltage	Sub-Throttle Sensor	V	1.4 V — 1.5 V
Main throttle sensor voltage	Main-Throttle Sensor	V	0.62 V — 0.70 V
Sub accelerator sensor voltage	Sub-Accelerator Sensor	V	1.0 V — 1.2 V
Main acceleration sensor voltage	Main-Accelerator Sensor	V	0.9 V — 1.1 V
Memory vehicle speed	Memorized Cruise Speed	km/h or MPH	0 km/h or 0 MPH
A/F correction #4	A/F Correction #4	%	–1% — 1%
A/F learning #4	A/F Learning #4	%	0.0%
Fuel level sensor resistance	Fuel level resistance	Ω	4 — 96 Ω
Engine oil temperature signal	Engine Oil Temperature	°C or °F	≥ 85°C or 185°F (after warm-up)
Exhaust AVCS retard angle amount RH	Exh. VVT Retard Ang. R	deg	0 deg — +1 deg
Exhaust AVCS retard angle amount LH	Exh. VVT Retard Ang. L	deg	0 deg — +1 deg
Exhaust oil flow control solenoid valve duty ratio RH	Exh. OCV Duty R	%	9.4%
Exhaust oil flow control solenoid valve duty ratio LH	Exh. OCV Duty L	%	9.4%
Exhaust oil flow control solenoid valve current RH	Exh. OCV Current R	mA	64 mA
Exhaust oil flow control solenoid valve current LH	Exh. OCV Current L	mA	64 mA
#1 cylinder roughness monitor	Roughness Monitor #1	—	0
#2 cylinder roughness monitor	Roughness Monitor #2	—	0
#3 cylinder roughness monitor	Roughness Monitor #3	—	0
#4 cylinder roughness monitor	Roughness Monitor #4	—	0
#5 cylinder roughness monitor	Roughness Monitor #5	—	0
#6 cylinder roughness monitor	Roughness Monitor #6	—	0
Knock sensor correction	Knocking Correction	deg	0 deg
Fuel tank pressure signal	Fuel Tank Pressure	mmHg, kPa, inHg or psig	7.5 mmHg, 1 kPa, 0.3 inHg or 0.14 psi
AT/MT identification	AT Vehicle ID Signal	—	AT vehicle
D-check require Flag	D-check Require Flag	—	OFF
Delivery (test) mode terminal	Delivery Mode Connector (Test Mode Connector)	—	OFF
Neutral position switch signal	Neutral Position Switch	—	ON

GETtheMANUALS.com

Content	Display	Unit of measure	Note (at idling)
Idle switch signal	Idle Switch Signal	—	ON
Ignition switch signal	Ignition Switch	—	ON
Power steering switch signal	P/S Switch	—	OFF (when OFF)
Air conditioning switch signal	A/C Switch	—	OFF (when OFF)
Starter switch signal	Starter Switch	—	OFF
Front oxygen monitor 1	Front O2 #1 Rich Signal	—	Rich, Lean
Front oxygen monitor 2	Front O2 #2 Rich Signal	—	Rich, Lean
Knocking signal	Knocking Signal	—	OFF
Crankshaft position sensor signal	Crankshaft Position Sig.	—	ON
Camshaft position sensor signal	Camshaft Position Sig.	—	ON
Rear defogger switch signal	Rear Defogger SW	—	OFF (when OFF)
Blower fan switch signal	Blower Fan SW	—	OFF (when OFF)
Light switch signal	Light Switch	—	OFF (when OFF)
Drain valve signal	Vent. Solenoid Valve	—	OFF (when OFF)
AT coordinate retard angle demand signal	Retard Signal from AT	—	OFF
AT coordinate fuel cut demand signal	Fuel Cut signal from AT	—	OFF
Vehicle dynamics control (VDC) torque down prohibition output	Ban of Torque Down	—	ON
Vehicle dynamics control (VDC) torque down demand	Request Torque Down VDC	—	OFF
AT coordinate permission signal	Torque Permission Signal	—	ON
Electronic throttle control motor relay signal	ETC Motor Relay	—	ON
Stop light switch signal	Stop Light Switch	—	OFF (when brake is OFF)
SET/COAST switch signal	SET/COAST Switch	—	OFF (when levers are not operated)
RESUME/ACCEL switch signal	RESUME/ACCEL Switch	—	OFF (when levers are not operated)
Brake switch signal *	Brake Switch	—	OFF (when brake is OFF)
Main switch signal	Main Switch	—	OFF (when levers are not operated)
Cruise control cancel switch signal	CC Cancel SW	—	OFF (when levers are not operated)
Malfunction indicator light on flag	MIL On Flag	—	Light OFF
Oil level switch signal	Oil level switch	—	HIGH level

GETmeMANUALS.org

3. READ CURRENT DATA FOR ENGINE (OBD MODE)

NOTE:
- For detailed operation procedures, refer to “PC application help for Subaru Select Monitor”.
- A list of the support data is shown in the following table.

Contents	Display	Referential value (at idling)	Unit of measure
Number of diagnosis code	Number of Diag. Code:	0	—
Condition of malfunction indicator light	MI(MIL)	OFF	—
Monitoring test of misfire	Misfire monitoring (Supp)	YES	—
Monitoring test of misfire	Misfire monitoring (Rdy)	YES	—
Monitoring test of fuel system	Fuel system monitoring (Supp)	YES	—
Monitoring test of fuel system	Fuel system monitoring (Rdy)	YES	—
Monitoring test of comprehensive component	Component monitoring (Supp)	YES	—
Monitoring test of comprehensive component	Component monitoring (Rdy)	YES	—
Test of catalyst	Catalyst Diagnosis (Supp)	YES	—
Test of catalyst	Catalyst Diagnosis (Rdy)	NO	—
Test of heating-type catalyst	Heated catalyst (Supp)	NO	—
Test of heating-type catalyst	Heated catalyst (Rdy)	N/A	—
Test of evaporative emission purge control system	Evaporative purge system (Supp)	YES	—
Test of evaporative emission purge control system	Evaporative purge system (Rdy)	NO	—
Secondary air system test	Secondary air system (Supp)	NO	—
Secondary air system test	Secondary air system (Rdy)	N/A	—
Test of air conditioning system refrigerant	A/C system refrigerant (Supp)	NO	—
Test of air conditioning system refrigerant	A/C system refrigerant (Rdy)	N/A	—
Test of oxygen sensor	Oxygen sensor (Supp)	YES	—
Test of oxygen sensor	Oxygen sensor (Rdy)	NO	—
Test of oxygen sensor heater	O2 Heater Diagnosis (Supp)	YES	—
Test of oxygen sensor heater	O2 Heater Diagnosis (Rdy)	NO	—
Test of EGR system	EGR system (Supp)	YES	—
Test of EGR system	EGR system (Rdy)	NO	—
Air fuel ratio control system for bank 1	Fuel system for Bank 1	Cl_normal	—
Air fuel ratio control system for bank 2	Fuel system for Bank 2	Cl_normal	—
Engine load data	Calculated load value	21.0	%
Engine coolant temperature signal	Coolant Temp.	91	°C
Short term fuel trim by front oxygen (A/F) sensor (Bank 1)	Short term fuel trim B1	17.2	%
Long term fuel trim by front oxygen (A/F) sensor (Bank 1)	Long term fuel trim B1	5.5	%
Short term fuel trim by front oxygen (A/F) sensor (Bank 2)	Short term fuel trim B2	17.2	%
Long term fuel trim by front oxygen (A/F) sensor (Bank 2)	Long term fuel trim B2	5.5	%
Intake manifold absolute pressure signal	Mani. Absolute Pressure	233	mmHg
Engine speed signal	Engine Speed	700	rpm

GETmeMANUALS.org

Contents	Display	Referential value (at idling)	Unit of measure
Vehicle speed signal	Vehicle Speed	0	km/h
#1 Cylinder ignition timing	Ignition timing adv. #1	16.5	°
Intake air temperature signal	Intake Air Temp.	54	°C
Intake air amount	Mass Air Flow	2.8	g/s
Throttle position signal	Throttle Opening Angle	13	%
Oxygen sensor (Bank 1 Sensor 2)	Oxygen sensor #12	0.1 — 0.7	V
A/F correction (Bank 1 Sensor 2)	Short term fuel trim #12	0.0	%
Oxygen sensor (Bank 2 Sensor 2)	Oxygen sensor #22	0.1 — 0.7	V
A/F correction (Bank 2 Sensor 2)	Short term fuel trim #22	0.0	%
On-board diagnostic system	OBD System	OBD/OBD2	—
Front oxygen (A/F) sensor (Bank 1 Sensor 1)	Oxygen sensor #11	Supported	—
Oxygen sensor (Bank 1 Sensor 2)	Oxygen sensor #12	Supported	—
Front oxygen (A/F) sensor (Bank 2 Sensor 1)	Oxygen sensor #21	Supported	—
Oxygen sensor (Bank 2 Sensor 2)	Oxygen sensor #22	Supported	—
Elapsed time after engine start	Time Since Engine Start	—	sec
Travel distance after the malfunction indicator light illuminates	Lighted MI lamp history	—	km
A/F lambda signal (Bank 1 Sensor 1)	A/F Sensor #11	1.001	—
A/F sensor output signal (Bank 1 Sensor 1)	A/F Sensor #11	2.805	V
A/F lambda signal (Bank 2 Sensor 1)	A/F Sensor #21	1.001	—
A/F sensor output signal (Bank 2 Sensor 1)	A/F Sensor #21	2.805	V
Target EGR	Commanded EGR	0	%
EGR deviation	EGR Error	0.0	%
Evaporative purge	Commanded Evap Purge	0	%
Fuel level signal	Fuel Level	—	%
Number of warm ups after DTC clear	Number of warm-ups	—	—
Travel distance after DTC clear	Meter since DTC cleared	—	km
Fuel tank pressure signal	Fuel Tank Pressure	8.8	mmHg
Atmospheric pressure signal	Atmosphere Pressure	Atmospheric pressure	mmHg
A/F lambda signal (Bank 1 Sensor 1)	A/F Sensor #11	0.999	—
A/F sensor current (Bank 1 Sensor 1)	A/F Sensor #11	0.02	mA
A/F lambda signal (Bank 2 Sensor 1)	A/F Sensor #21	0.999	—
A/F sensor current (Bank 2 Sensor 1)	A/F Sensor #21	0.02	mA
Catalyst temperature #1	Catalyst Temperature #11	—	°C
Catalyst temperature #2	Catalyst Temperature #21	—	°C
Monitoring test of misfire	Misfire monitoring (Enable)	YES	—
Monitoring test of misfire	Misfire monitoring (Comp)	NO	—
Monitoring test of fuel system	Fuel system monitoring (Enable)	YES	—
Monitoring test of fuel system	Fuel system monitoring (Comp)	NO	—
Monitoring test of comprehensive component	Component monitoring (Enable)	YES	—
Monitoring test of comprehensive component	Component monitoring (Comp)	NO	—
Test of catalyst	Catalyst Diagnosis (Enable)	YES	—
Test of catalyst	Catalyst Diagnosis (Comp)	NO	—

GETmeMANUALS.org

Contents	Display	Referential value (at idling)	Unit of measure
Test of heating-type catalyst	Heated catalyst (Enable)	N/A	—
Test of heating-type catalyst	Heated catalyst (Comp)	N/A	—
Test of evaporative emission purge control system	Evaporative purge system (Enable)	YES	—
Test of evaporative emission purge control system	Evaporative purge system (Comp)	NO	—
Secondary air system test	Secondary air system (Enable)	N/A	—
Secondary air system test	Secondary air system (Comp)	N/A	—
Test of air conditioning system refrigerant	A/C system refrigerant (Enable)	N/A	—
Test of air conditioning system refrigerant	A/C system refrigerant (Comp)	N/A	—
Test of oxygen sensor	Oxygen sensor (Enable)	YES	—
Test of oxygen sensor	Oxygen sensor (Comp)	NO	—
Test of oxygen sensor heater	O2 Heater Diagnosis (Enable)	YES	—
Test of oxygen sensor heater	O2 Heater Diagnosis (Comp)	NO	—
Test of EGR system	EGR system (Enable)	YES	—
Test of EGR system	EGR system (Comp)	NO	—
ECM power supply voltage	Control module voltage	13.789	V
Absolute load	Absolute Load Value	22	%
A/F target lambda	Target Equivalence Ratio	0.976	—
Relative throttle opening angle	Relative Throttle Pos.	2	%
Ambient temperature	Ambient Temperature	Ambient air temperature	°C
Absolute throttle opening angle 2	Absolute Throttle Pos.#2	32	%
Absolute accelerator opening angle 1	Accelerator Pedal Pos.#1	13	%
Absolute accelerator opening angle 2	Accelerator Pedal Pos.#2	13	%
Target throttle opening angle	Target Throt. Act. Cont.	0	%
Engine operating time while malfunction indicator light lit	Time while MIL lighted	—	min
Elapsed time after DTC clear	Time since DTC cleared	—	min
Type of fuel	Type of fuel	GAS	—
Relative acceleration opening angle	Relative Accelera. Pos.	0	%
Neutral condition	AT drive status	NEUT	—

GETmeMANUALS.org

4. READ FREEZE FRAME DATA FOR ENGINE (OBD MODE)

NOTE:
- For detailed operation procedures, refer to “PC application help for Subaru Select Monitor”.
- A list of the support data is shown in the following table.

Description	Display	Unit of measure
DTC of freeze frame data	Freeze frame data	—
Air fuel ratio control system for bank 1	Fuel system for Bank 1	—
Air fuel ratio control system for bank 2	Fuel system for Bank 2	—
Engine load data	Calculated load value	%
Engine coolant temperature signal	Coolant Temp.	°C or °F
Short term fuel trim by front oxygen (A/F) sensor (Bank 1)	Short term fuel trim B1	%
Long term fuel trim by front oxygen (A/F) sensor (Bank 1)	Long term fuel trim B1	%
Short term fuel trim by front oxygen (A/F) sensor (Bank 2)	Short term fuel trim B2	%
Long term fuel trim by front oxygen (A/F) sensor (Bank 2)	Long term fuel trim B2	%
Intake manifold absolute pressure signal	Mani. Absolute Pressure	mmHg, kPa, inHg or psig
Engine speed signal	Engine Speed	rpm
Vehicle speed signal	Vehicle Speed	km/h or MPH
Ignition timing adv. #1	Ignition timing adv. #1	°
Intake air temperature	Intake Air Temp.	°C or °F
Amount of intake air	Mass Air Flow	g/s
Throttle valve angle	Throttle Opening Angle	%
Oxygen sensor #12	Oxygen sensor #12	V
A/F correction value #12	Short term fuel trim #12	%
Oxygen sensor #22	Oxygen sensor #22	V
A/F correction value #22	Short term fuel trim #22	%
On-board diagnostic system	OBD System	—
Oxygen sensor #11	Oxygen sensor #11	—
Oxygen sensor #12	Oxygen sensor #12	—
Oxygen sensor #21	Oxygen sensor #21	—
Oxygen sensor #22	Oxygen sensor #22	—
Elapsed time after engine start	Time Since Engine Start	sec
Target EGR	Commanded EGR	%
EGR deviation	EGR Error	%
Evaporative purge	Commanded Evap Purge	%
Fuel level signal	Fuel Level	%
Fuel tank pressure signal	Fuel Tank Pressure	mmHg, kPa, inHg or psig
Atmospheric pressure	Atmosphere Pressure	mmHg, kPa, inHg or psig
ECM power supply voltage	Control module voltage	V
Absolute load	Absolute Load Value	%
A/F target lambda	Target Equivalence Ratio	—
Relative throttle opening angle	Relative Throttle Pos.	%
Ambient temperature	Ambient Temperature	°C or °F
Absolute throttle opening angle 2	Absolute Throttle Pos.#2	%
Absolute accelerator opening angle 1	Accelerator Pedal Pos.#1	%
Absolute accelerator opening angle 2	Accelerator Pedal Pos.#2	%
Target throttle opening angle	Target Throt. Act. Cont.	%
Neutral condition	AT drive status	—

GETmeMANUALS.org

5. V.I.N. REGISTRATION

1) On «Main Menu» display, select {Each System Check}.
2) On «System Selection Menu» display, select {Engine Control System}.
3) Click the [OK] button after the information of engine type has been displayed.
4) On «Engine Diagnosis» display, select {Entry VIN}.
5) Perform the procedures shown on the display screen.

GETthemANSWERS.org

10. Read Diagnostic Trouble Code (DTC)

A: OPERATION

1. SUBARU SELECT MONITOR (NORMAL MODE)

NOTE:
- For detailed operation procedures, refer to “PC application help for Subaru Select Monitor”.
- For details concerning DTC, refer to “List of Diagnostic Trouble Code (DTC)”. <Ref. to EN(H6DO)(diag)-85, List of Diagnostic Trouble Code (DTC).>

2. GENERAL SCAN TOOL

Refer to the data denoting emission-related powertrain DTC.
For details concerning DTC, refer to “List of Diagnostic Trouble Code (DTC)”. <Ref. to EN(H6DO)(diag)-85, List of Diagnostic Trouble Code (DTC).>

NOTE:
Refer to the general scan tool manufacturer’s operation manual to access powertrain DTC (MODE $03).

GETthemANSWERS.org

11.Inspection Mode

A: PROCEDURE

Perform the diagnosis shown in the following DTC table.
When performing the diagnosis not listed in “List of Diagnostic Trouble Code (DTC)”, refer to the item on the drive cycle. <Ref. to EN(H6DO)(diag)-50, Drive Cycle.>

DTC	Item	Condition
P0011	Intake Camshaft Position - Timing Over-Advanced or System Performance (Bank 1)	—
P0014	Exhaust AVCS System 1 (Range/Performance)	—
P0016	Crankshaft Position - Camshaft Position Correlation (Bank1)	—
P0017	Crank and Cam Timing B System Failure (Bank 1)	—
P0018	Crankshaft Position - Camshaft Position Correlation (Bank2)	—
P0019	Crank and Cam Timing B System Failure (Bank 2)	—
P0021	Intake Camshaft Position - Timing Over-Advanced or System Performance (Bank 2)	—
P0024	Exhaust AVCS System 2 (Range/Performance)	—
P0031	HO2S Heater Control Circuit Low (Bank 1 Sensor 1)	—
P0032	HO2S Heater Control Circuit High (Bank 1 Sensor 1)	—
P0037	HO2S Heater Control Circuit Low (Bank 1 Sensor 2)	—
P0038	HO2S Heater Control Circuit High (Bank 1 Sensor 2)	—
P0051	HO2S Heater Control Circuit Low (Bank 2 Sensor 1)	—
P0052	HO2S Heater Control Circuit High (Bank 2 Sensor 1)	—
P0057	HO2S Heater Control Circuit Low (Bank 2 Sensor 2)	—
P0058	HO2S Heater Control Circuit High (Bank 2 Sensor 2)	—
P0102	Mass or Volume Air Flow Circuit Low Input	—
P0103	Mass or Volume Air Flow Circuit High Input	—
P0107	Manifold Absolute Pressure/Barometric Pressure Circuit Low Input	—
P0108	Manifold Absolute Pressure/Barometric Pressure Circuit High Input	—
P0112	Intake Air Temperature Sensor 1 Circuit Low	—
P0113	Intake Air Temperature Sensor 1 Circuit High	—
P0117	Engine Coolant Temperature Circuit Low	—
P0118	Engine Coolant Temperature Circuit High	—
P0122	Throttle/Pedal Position Sensor/Switch “A” Circuit Low	—
P0123	Throttle/Pedal Position Sensor/Switch “A” Circuit High	—
P0131	O2 Sensor Circuit Low Voltage (Bank 1 Sensor 1)	—
P0132	O2 Sensor Circuit High Voltage (Bank 1 Sensor 1)	—
P0137	O2 Sensor Circuit Low Voltage (Bank 1 Sensor 2)	—
P0138	O2 Sensor Circuit High Voltage (Bank 1 Sensor 2)	—
P0140	O2 Sensor Circuit No Activity Detected (Bank1 Sensor2)	—
P0151	O2 Sensor Circuit Low Voltage (Bank 2 Sensor 1)	—
P0152	O2 Sensor Circuit High Voltage (Bank 2 Sensor 1)	—
P0157	O2 Sensor Circuit Low Voltage (Bank 2 Sensor 2)	—
P0158	O2 Sensor Circuit High Voltage (Bank 2 Sensor 2)	—
P0160	O2 Sensor Circuit No Activity Detected (Bank2 Sensor2)	—
P0182	Fuel Temperature Sensor “A” Circuit Low Input	—
P0183	Fuel Temperature Sensor “A” Circuit High Input	—
P0197	Engine Oil Temperature Sensor Low	—
P0198	Engine Oil Temperature Sensor High	—
P0201	Injector #1	—
P0202	Injector #2	—

GETmeMANUALS.org

DTC	Item	Condition
P0203	Injector #3	—
P0204	Injector #4	—
P0205	Injector #5	—
P0206	Injector #6	—
P0222	Throttle/Pedal Position Sensor/Switch “B” Circuit Low	—
P0223	Throttle/Pedal Position Sensor/Switch “B” Circuit High	—
P0230	Fuel Pump Primary Circuit	—
P0327	Knock Sensor 1 Circuit Low (Bank 1 or Single Sensor)	—
P0328	Knock Sensor 1 Circuit High (Bank 1 or Single Sensor)	—
P0332	Knock Sensor 2 Circuit Low (Bank 2)	—
P0333	Knock Sensor 2 Circuit High (Bank 2)	—
P0335	Crankshaft Position Sensor “A” Circuit	—
P0336	Crankshaft Position Sensor “A” Circuit Range/Performance	—
P0340	Camshaft Position Sensor “A” Circuit (Bank 1 or Single Sensor)	—
P0345	Camshaft Position Sensor “A” Circuit (Bank 2)	—
P0351	Ignition Coil A Primary/Secondary Circuit	—
P0352	Ignition Coil B Primary/Secondary Circuit	—
P0353	Ignition Coil C Primary/Secondary Circuit	—
P0354	Ignition Coil D Primary/Secondary Circuit	—
P0355	Ignition Coil E Primary/Secondary Circuit	—
P0356	Ignition Coil F Primary/Secondary Circuit	—
P0365	Camshaft Position Sensor “B” Circuit (Bank 1)	—
P0390	Camshaft Position Sensor “B” Circuit (Bank 2)	—
P0447	Evaporative Emission Control System Vent Control Circuit Open	—
P0448	Evaporative Emission Control System Vent Control Circuit Shorted	—
P0452	Evaporative Emission Control System Pressure Sensor Low Input	—
P0453	Evaporative Emission Control System Pressure Sensor High Input	—
P0458	Evaporative Emission System Purge Control Valve Circuit Low	—
P0462	Fuel Level Sensor “A” Circuit Low	—
P0463	Fuel Level Sensor “A” Circuit High	—
P0500	Vehicle Speed Sensor “A”	—
P0512	Starter Request Circuit	—
P0513	Incorrect Immobilizer Key	—
P0604	Internal Control Module Random Access Memory (RAM) Error	—
P0605	Internal Control Module Read Only Memory (ROM) Error	—
P0607	Throttle Control System Circuit Range/Performance	—
P0638	Throttle Actuator Control Range/Performance (Bank 1)	—
P0700	Transmission Control System (MIL Request)	—
P1152	O2 Sensor Circuit Range/Performance (Low) (Bank1 Sensor1)	—
P1153	O2 Sensor Circuit Range/Performance (High) (Bank1 Sensor1)	—
P1154	O2 Sensor Circuit Range/Performance (Low) (Bank 2 Sensor 1)	—
P1155	O2 Sensor Circuit Range/Performance (High) (Bank 2 Sensor 1)	—
P1160	Return Spring Failure	—
P1518	Starter Switch Circuit Low Input	—
P1560	Back-Up Voltage Circuit Malfunction	—
P1570	Antenna	—
P1571	Reference Code Incompatibility	—
P1572	IMM Circuit Failure (Except Antenna Circuit)	—
P1574	Key Communication Failure	—
P1576	EGI Control Module EEPROM	—

GETmeMANUALS.org

DTC	Item	Condition
P1577	IMM Control Module EEPROM	—
P1578	Meter Failure	—
P2088	Intake Camshaft Position Actuator Control Circuit Low (Bank 1)	—
P2089	Intake Camshaft Position Actuator Control Circuit High (Bank 1)	—
P2090	Exhaust Camshaft Position Actuator Control Circuit Low (Bank 1)	—
P2091	Exhaust Camshaft Position Actuator Control Circuit High (Bank 1)	—
P2092	Intake Camshaft Position Actuator Control Circuit Low (Bank 2)	—
P2093	Intake Camshaft Position Actuator Control Circuit High (Bank 2)	—
P2094	Exhaust Camshaft Position Actuator Control Circuit Low (Bank 2)	—
P2095	Exhaust Camshaft Position Actuator Control Circuit High (Bank 2)	—
P2101	Throttle Actuator Control Motor Circuit Range/Performance	—
P2102	Throttle Actuator Control Motor Circuit Low	—
P2103	Throttle Actuator Control Motor Circuit High	—
P2109	Throttle/Pedal Position Sensor “A” Minimum Stop Performance	—
P2122	Throttle/Pedal Position Sensor/Switch “D” Circuit Low Input	—
P2123	Throttle/Pedal Position Sensor/Switch “D” Circuit High Input	—
P2127	Throttle/Pedal Position Sensor/Switch “E” Circuit Low Input	—
P2128	Throttle/Pedal Position Sensor/Switch “E” Circuit High Input	—
P2135	Throttle/Pedal Position Sensor/Switch “A”/“B” Voltage Correlation	—
P2138	Throttle/Pedal Position Sensor/Switch “D”/“E” Voltage Correlation	—
P2227	Barometric Pressure Circuit Range/Performance	—
P2228	Barometric Pressure Circuit Low	—
P2229	Barometric Pressure Circuit High	—
U0073	CAN Failure, Bus ‘Off’ Detection	—
U0101	CAN (TCU) Data Not Loaded	—
U0122	CAN (VDC) Data Not Loaded	—
U0140	CAN (BCU) Data Not Loaded	—
U0402	CAN (TCU) Data Abnormal	—
U0416	CAN (VDC) Data Abnormal	—
U0422	CAN (BCU) Data Abnormal	—

GETmeMANUALS.org

1. PREPARATION FOR THE INSPECTION MODE

1) Check that the battery voltage is 12 V or more and fuel remains approx. half [20 — 40 ℓ (5.3 — 10.6 US gal, 4.4 — 8.8 Imp gal)].
2) Lift up the vehicle using a garage jack and place it on rigid racks, or drive the vehicle onto free rollers.

WARNING:
- **Before lifting up the vehicle, ensure parking brake is applied.**
- **Do not use a pantograph jack in place of a rigid rack.**
- **Secure a rope or wire to the front or rear towing hooks to prevent the lateral runout of front wheels.**
- **Before rotating the wheels, make sure that there is no one in front of the vehicle. Besides while the wheels are rotating, make sure that no one approaches the vehicle front side.**
- **Make sure that there is nothing around the wheels. For AWD model, pay attention to all four wheels.**
- **While servicing, do not depress or release the clutch pedal or accelerator pedal quickly regardless of the engine speed. Quick operation may cause the vehicle to drop off the free roller.**
- **To prevent the vehicle from slipping due to vibration, do not place anything between rigid rack and the vehicle.**

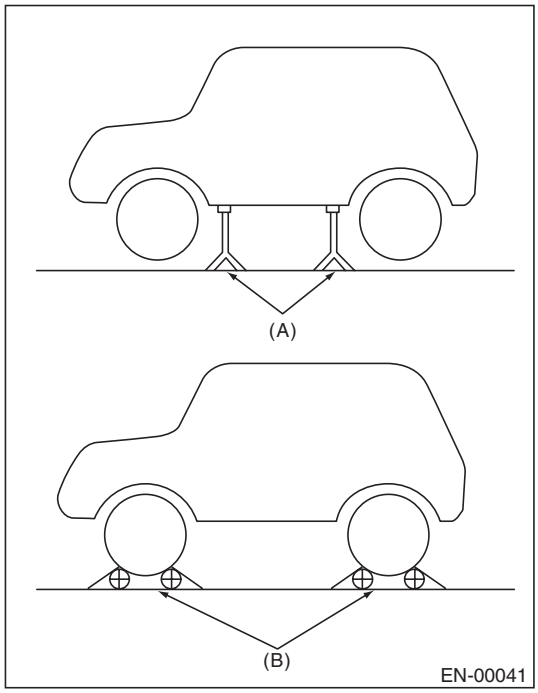

(A) Rigid rack
(B) Free roller

2. SUBARU SELECT MONITOR

1) Check that no DTC remains after clearing memory. <Ref. to EN(H6DO)(diag)-57, Clear Memory Mode.>
2) Warm up the engine.
3) Prepare the Subaru Select Monitor kit. <Ref. to EN(H6DO)(diag)-8, PREPARATION TOOL, General Description.>

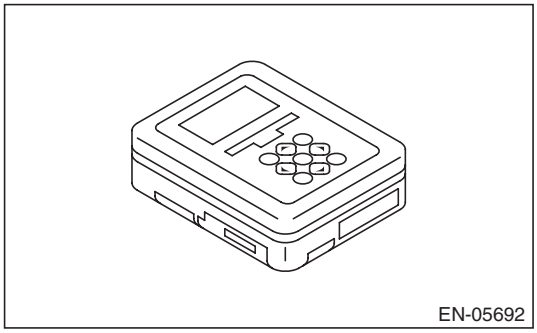

4) Prepare PC with Subaru Select Monitor installed.
5) Connect the USB cable to SDI (Subaru Diagnosis Interface) and USB port on the personal computer (dedicated port for the Subaru Select Monitor).

NOTE:
The dedicated port for the Subaru Select Monitor means the USB port which was used to install the Subaru Select Monitor.
6) Connect the diagnosis cable to SDI.
7) Install the delivery (test) mode fuse (A) of the main fuse box.

CAUTION:
Do not use any fuses that are installed on the vehicle.

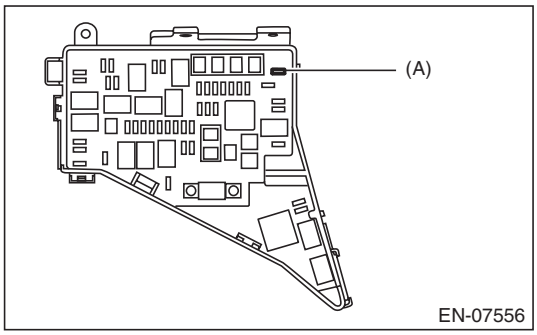

GETtheMANUAL.org

8) Connect SDI to data link connector located in the lower portion of the instrument panel (on the driver's side).

CAUTION:
Do not connect the scan tools except for Subaru Select Monitor and general scan tool.

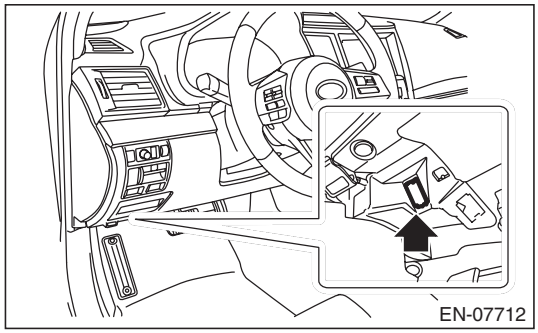

9) Start the PC.
10) Turn the ignition switch to ON (engine OFF) and run the "PC application for Subaru Select Monitor".
11) On «Main Menu» display, select {Each System Check}.
12) On «System Selection Menu» display, select {Engine Control System}.
13) Click the [OK] button after the information of engine type has been displayed.
14) On «Engine Diagnosis» display, select {Dealer Check Mode Procedure}.
15) When the "Perform Inspection (Dealer Check) Mode ?" is shown on the screen, click the [Next] button.
16) Perform subsequent procedures as instructed on the display screen.
• If trouble still remains in the memory, the corresponding DTC appears on the display screen.

NOTE:
• For detailed operation procedures, refer to "PC application help for Subaru Select Monitor".
• For details concerning DTC, refer to "List of Diagnostic Trouble Code (DTC)". <Ref. to EN(H6DO)(diag)-85, List of Diagnostic Trouble Code (DTC).>
• Release the parking brake.
• The speed difference between front and rear wheels may illuminate the ABS warning light, but this does not indicate a malfunction. When engine control system diagnosis is finished, perform the VDC memory clearance procedure of self-diagnosis function. <Ref. to VDC(diag)-25, Clear Memory Mode.>

3. GENERAL SCAN TOOL

1) Check that no DTC remains after clearing memory. <Ref. to EN(H6DO)(diag)-32, MODE $04 (CLEAR/RESET EMISSION-RELATED DIAGNOSTIC INFORMATION), OPERATION, General Scan Tool.>
2) Warm up the engine.
3) Install the delivery (test) mode fuse (A) of the main fuse box.

CAUTION:
Do not use any fuses that are installed on the vehicle.

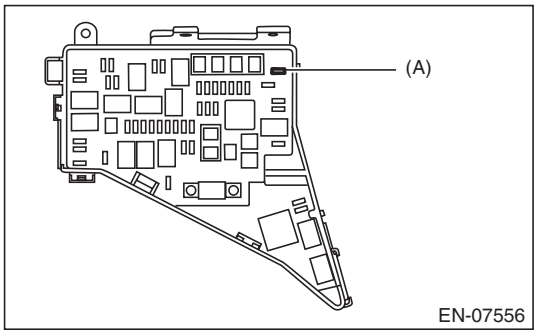

4) Connect the general scan tool to data link connector located in the lower portion of the instrument panel (on the driver's side).

CAUTION:
Do not connect the scan tools except for Subaru Select Monitor and general scan tool.

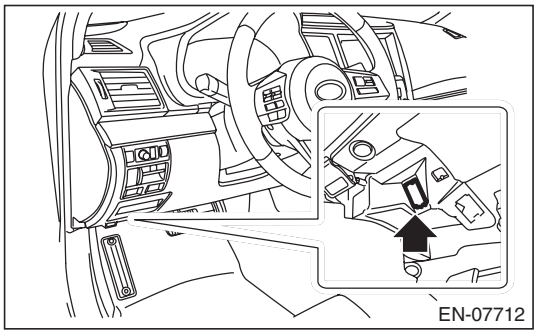

5) Start the engine.

NOTE:
Ensure the selector lever is placed in the "P" range before starting.
6) Turn the neutral position switch to ON using select lever.
7) Depress the brake pedal to turn the brake switch ON.
8) Keep the engine speed in 2,500 — 3,000 rpm range for 40 seconds.

GETthemANSWERS.org

9) Shift the select lever in the “D” range and drive the vehicle at 5 to 10 km/h (3 to 6 MPH).

NOTE:
- For AWD model, release the parking brake.
- The speed difference between front and rear wheels may illuminate the ABS warning light, but this does not indicate a malfunction. When engine control system diagnosis is finished, perform the VDC memory clearance procedure of self-diagnosis function. <Ref. to VDC(diag)-25, Clear Memory Mode.>

10) Using the general scan tool, check for DTC and record the result(s).

NOTE:
- For detailed operation procedures, refer to the general scan tool operation manual.
- For details concerning DTC, refer to “List of Diagnostic Trouble Code (DTC)”.

<Ref. to EN(H6DO)(diag)-85, List of Diagnostic Trouble Code (DTC).>

GETmeMANUALS.org

12. Drive Cycle

A: PROCEDURE

It is necessary to perform the drive cycle listed below if DTC is not found in the Inspection Mode. It is possible to complete diagnosis of the DTC by performing the indicated drive cycle. After the repair for the DTC, perform a necessary drive cycle and make sure the function recovers and the DTC is recorded.

1. PREPARATION FOR DRIVE CYCLE

1) Check that the battery voltage is 12 V or more and fuel remains approx. half [20 — 40 ℓ (5.3 — 10.6 US gal, 4.4 — 8.8 Imp gal)].
2) After performing the diagnostics and Clear Memory Mode, check that no DTC remains. <Ref. to EN(H6DO)(diag)-57, Clear Memory Mode.>
3) Check the delivery (test) mode fuse is removed.

NOTE:
- Perform the drive cycle after warming up the engine except when the engine coolant temperature at engine start is specified.
- Perform the drive cycle twice if the DTC in the list is marked with *. After completing the first drive cycle, stop the engine and perform second diagnosis in same condition.

2. DRIVE CYCLE A

DTC	Item	Condition
*P0125	Insufficient Coolant Temperature for Closed Loop Fuel Control	Engine coolant temperature at engine start is less than 20°C (68°F).
*P0126	Insufficient Engine Coolant Temperature for Stable Operation	—
*P0128	Coolant Thermostat (Engine Coolant Temperature Below Thermostat Regulating Temperature)	—
*P0141	O2 Sensor Heater Circuit (Bank1 Sensor2)	—
*P014C	O2 Sensor Slow Response - Rich to Lean (Bank 1 Sensor 1)	—
*P014D	O2 Sensor Slow Response - Lean to Rich (Bank 1 Sensor 1)	—
*P014E	O2 Sensor Slow Response - Rich to Lean (Bank 2 Sensor 1)	—
*P014F	O2 Sensor Slow Response - Lean to Rich (Bank 2 Sensor 1)	—
*P015A	O2 Sensor Delayed Response - Rich to Lean (Bank 1 Sensor 1)	—
*P015B	O2 Sensor Delayed Response - Lean to Rich (Bank 1 Sensor 1)	—
*P015C	O2 Sensor Delayed Response - Rich to Lean (Bank 2 Sensor 1)	—
*P015D	O2 Sensor Delayed Response - Lean to Rich (Bank 2 Sensor 1)	—
*P0161	O2 Sensor Heater Circuit (Bank2 Sensor2)	—
*P0171	System Too Lean (Bank 1)	Complete diagnosis with drive cycle B or C as well.
*P0172	System Too Rich (Bank 1)	Complete diagnosis with drive cycle B or C as well.
*P0174	System Too Lean (Bank 2)	Complete diagnosis with drive cycle B or C as well.
*P0175	System Too Rich (Bank 2)	Complete diagnosis with drive cycle B or C as well.
*P0196	Engine Oil Temperature Sensor Circuit Range/Performance	—
*P0301	Cylinder 1 Misfire Detected	Complete diagnosis with drive cycle B or C as well.
*P0302	Cylinder 2 Misfire Detected	Complete diagnosis with drive cycle B or C as well.
*P0303	Cylinder 3 Misfire Detected	Complete diagnosis with drive cycle B or C as well.
*P0304	Cylinder 4 Misfire Detected	Complete diagnosis with drive cycle B or C as well.

GETmeMANUALS.org

DTC	Item	Condition
*P0305	Cylinder 5 Misfire Detected	Complete diagnosis with drive cycle B or C as well.
*P0306	Cylinder 6 Misfire Detected	Complete diagnosis with drive cycle B or C as well.
*P0420	Catalyst System Efficiency Below Threshold (Bank 1)	—
*P0442	Evaporative Emission Control System Leak Detected (Small Leak)	Engine coolant temperature at engine start is less than 25°C (77°F).
*P0451	Evaporative Emission Control System Pressure Sensor	—
*P0456	Evaporative Emission Control System Leak Detected (Very Small Leak)	Engine coolant temperature at engine start is less than 25°C (77°F).
*P0457	Evaporative Emission Control System Leak Detected (Fuel Cap Loose/Off)	Engine coolant temperature at engine start is less than 25°C (77°F).
*P0459	Evaporative Emission System Purge Control Valve Circuit High	—
*P0464	Fuel Level Sensor Circuit Intermittent	—
P1443	Vent Control Solenoid Valve Function Problem	—
*P2096	Post Catalyst Fuel Trim System Too Lean (Bank 1)	Complete diagnosis with drive cycle B or C as well.
*P2097	Post Catalyst Fuel Trim System Too Rich (Bank 1)	Complete diagnosis with drive cycle B or C as well.
*P2098	Post Catalyst Fuel Trim System Too Lean Bank 2	Complete diagnosis with drive cycle B or C as well.
*P2099	Post Catalyst Fuel Trim System Too Rich Bank 2	Complete diagnosis with drive cycle B or C as well.

Diagnostic procedure:
1) Drive for 20 minutes or more at a constant speed of 80 km/h (50 MPH) or more.
2) Stop the vehicle and idle for one minute.

3. DRIVE CYCLE B

DTC	Item	Condition
*P0171	System Too Lean (Bank 1)	Complete diagnosis with drive cycle A or C as well.
*P0172	System Too Rich (Bank 1)	Complete diagnosis with drive cycle A or C as well.
*P0174	System Too Lean (Bank 2)	Complete diagnosis with drive cycle A or C as well.
*P0175	System Too Rich (Bank 2)	Complete diagnosis with drive cycle A or C as well.
*P0301	Cylinder 1 Misfire Detected	Complete diagnosis with drive cycle A or C as well.
*P0302	Cylinder 2 Misfire Detected	Complete diagnosis with drive cycle A or C as well.
*P0303	Cylinder 3 Misfire Detected	Complete diagnosis with drive cycle A or C as well.
*P0304	Cylinder 4 Misfire Detected	Complete diagnosis with drive cycle A or C as well.
*P0305	Cylinder 5 Misfire Detected	Complete diagnosis with drive cycle A or C as well.
*P0306	Cylinder 6 Misfire Detected	Complete diagnosis with drive cycle A or C as well.
*P0506	Idle Air Control System RPM Lower Than Expected	—
*P0507	Idle Air Control System RPM Higher Than Expected	—

GETmeMANUALS.org

DTC	Item	Condition
*P2096	Post Catalyst Fuel Trim System Too Lean (Bank 1)	Complete diagnosis with drive cycle A or C as well.
*P2097	Post Catalyst Fuel Trim System Too Rich (Bank 1)	Complete diagnosis with drive cycle A or C as well.
*P2098	Post Catalyst Fuel Trim System Too Lean Bank 2	Complete diagnosis with drive cycle A or C as well.
*P2099	Post Catalyst Fuel Trim System Too Rich Bank 2	Complete diagnosis with drive cycle A or C as well.
*P219A	Bank 1 Air-Fuel Ratio Imbalance	Complete diagnosis with drive cycle C as well.
*P219B	Bank 2 Air-Fuel Ratio Imbalance	Complete diagnosis with drive cycle C as well.

Diagnostic procedure:
1) Drive at 10 km/h (6 MPH) or more.
2) Stop the vehicle and idle for ten minutes.

4. DRIVE CYCLE C

DTC	Item	Condition
*P0030	HO2S Heater Control Circuit (Bank 1 Sensor 1)	—
*P0050	HO2S Heater Control Circuit (Bank 2 Sensor 1)	—
*P0068	MAP/MAF - Throttle Position Correlation	—
*P0101	Mass or Volume Air Flow Circuit Range/Performance	—
P0134	O2 Sensor Circuit No Activity Detected (Bank 1 Sensor 1)	—
*P013A	O2 Sensor Slow Response - Rich to Lean (Bank 1 Sensor 2)	—
*P013B	O2 Sensor Slow Response - Lean to Rich (Bank 1 Sensor 2)	—
*P013C	O2 Sensor Slow Response - Rich to Lean (Bank 2 Sensor 2)	—
*P013D	O2 Sensor Slow Response - Lean to Rich (Bank 2 Sensor 2)	—
*P013E	O2 Sensor Delayed Response - Rich to Lean (Bank 1 Sensor 2)	—
*P013F	O2 Sensor Delayed Response - Lean to Rich (Bank 1 Sensor 2)	—
*P014A	O2 Sensor Delayed Response - Rich to Lean (Bank 2 Sensor 2)	—
*P014B	O2 Sensor Delayed Response - Lean to Rich (Bank 2 Sensor 2)	—
P0154	O2 Sensor Circuit No Activity Detected (Bank 2 Sensor 1)	—
*P0171	System Too Lean (Bank 1)	Complete diagnosis with drive cycle A or B as well.
*P0172	System Too Rich (Bank 1)	Complete diagnosis with drive cycle A or B as well.
*P0174	System Too Lean (Bank 2)	Complete diagnosis with drive cycle A or B as well.
*P0175	System Too Rich (Bank 2)	Complete diagnosis with drive cycle A or B as well.
*P0301	Cylinder 1 Misfire Detected	Complete diagnosis with drive cycle A or B as well.
*P0302	Cylinder 2 Misfire Detected	Complete diagnosis with drive cycle A or B as well.
*P0303	Cylinder 3 Misfire Detected	Complete diagnosis with drive cycle A or B as well.
*P0304	Cylinder 4 Misfire Detected	Complete diagnosis with drive cycle A or B as well.
*P0305	Cylinder 5 Misfire Detected	Complete diagnosis with drive cycle A or B as well.
*P0306	Cylinder 6 Misfire Detected	Complete diagnosis with drive cycle A or B as well.
*P0400	Exhaust Gas Recirculation Flow	—

GETmeMANUALS.org

Drive Cycle

DTC	Item	Condition
P1492	EGR Solenoid Valve Signal #1 Circuit Malfunction (Low Input)	—
P1493	EGR Solenoid Valve Signal #1 Circuit Malfunction (High Input)	—
P1494	EGR Solenoid Valve Signal #2 Circuit Malfunction (Low Input)	—
P1495	EGR Solenoid Valve Signal #2 Circuit Malfunction (High Input)	—
P1496	EGR Solenoid Valve Signal #3 Circuit Malfunction (Low Input)	—
P1497	EGR Solenoid Valve Signal #3 Circuit Malfunction (High Input)	—
P1498	EGR Solenoid Valve Signal #4 Circuit Malfunction (Low Input)	—
P1499	EGR Solenoid Valve Signal #4 Circuit Malfunction (High Input)	—
*P2096	Post Catalyst Fuel Trim System Too Lean (Bank 1)	Complete diagnosis with drive cycle A or B as well.
*P2097	Post Catalyst Fuel Trim System Too Rich (Bank 1)	Complete diagnosis with drive cycle A or B as well.
*P2098	Post Catalyst Fuel Trim System Too Lean Bank 2	Complete diagnosis with drive cycle A or B as well.
*P2099	Post Catalyst Fuel Trim System Too Rich Bank 2	Complete diagnosis with drive cycle A or B as well.
*P219A	Bank 1 Air-Fuel Ratio Imbalance	Complete diagnosis with drive cycle B as well.
*P219B	Bank 2 Air-Fuel Ratio Imbalance	Complete diagnosis with drive cycle B as well.

Diagnostic procedure:

Drive according to the drive pattern described below.

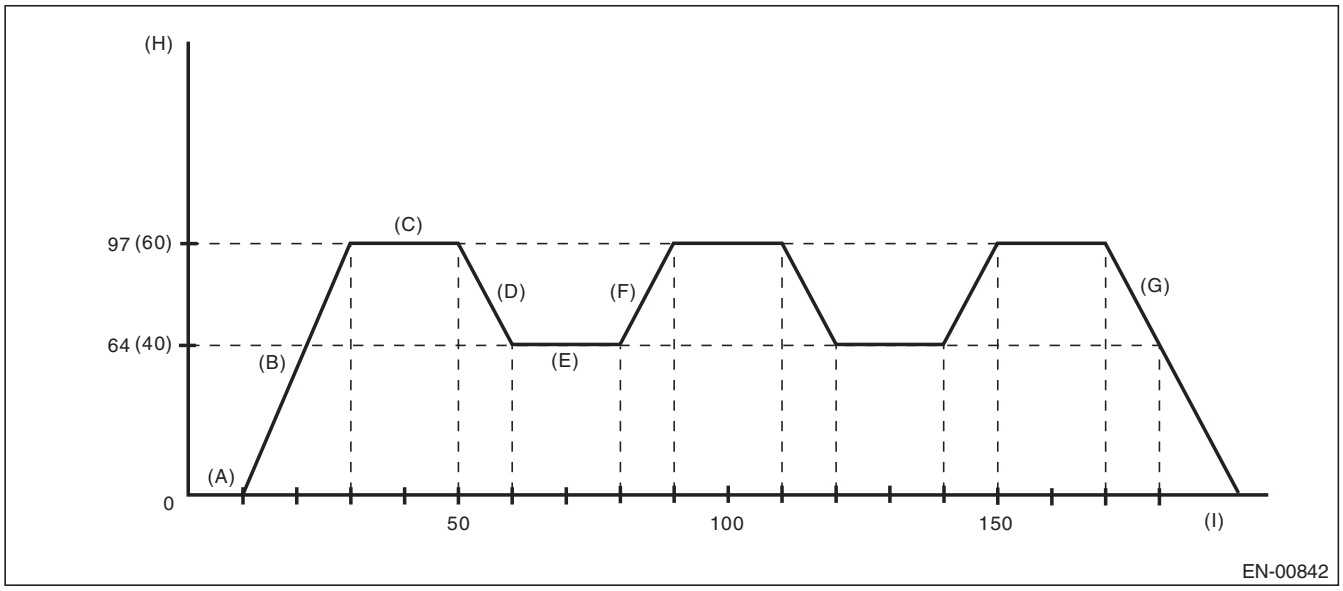

(A) Idle the engine for 10 seconds or more.

(B) Accelerate to 97 km/h (60 MPH) or more within 20 seconds.

(C) Drive for 20 seconds or more at 97 km/h (60 MPH) or more.

(D) Decelerate with fully closed throttle to 64 km/h (40 MPH) or less.

(E) Drive for 20 seconds or more at 64 km/h (40 MPH) or less.

(F) Accelerate to 97 km/h (60 MPH) or more within 10 seconds.

(G) Stop the vehicle with throttle fully closed.

(H) Vehicle speed km/h (MPH)

(I) Sec.

GETmeMANUALS.org

5. DRIVE CYCLE D

DTC	Item	Condition
*P0181	Fuel Temperature Sensor “A” Circuit Range/Performance	—

NOTE:
In drive cycle D, one drive cycle will be established when both the drift diagnosis and stuck diagnosis have completed.

Diagnostic procedure:

DRIFT DIAGNOSIS

1) Make sure of the items below before starting the engine.
- Engine coolant temperature is less than 30°C (86°F).
- Remaining fuel is 10 ℓ (2.6 US gal, 2.2 Imp gal) or more.
- Battery voltage is 10.9 V or more.

2) Idle the engine until engine coolant temperature is at least 10°C (18°F) higher than it was when engine started.
3) After the engine has reached the state of procedure 2), idle the engine for another 5 minutes or more.

STUCK DIAGNOSIS

1) Make sure that the battery voltage is 10.9 V or more.
2) Perform the Clear Memory Mode. <Ref. to EN(H6DO)(diag)-57, Clear Memory Mode.>
3) Drive the vehicle for the distance equal to the fuel of 50 ℓ (13.2 US gal, 11 Imp gal).

NOTE:
- It is acceptable to drive the vehicle intermittently.
- Do not disconnect the battery terminals during stuck diagnosis. (Data will be cleared by disconnecting the battery terminals.)

6. DRIVE CYCLE E

DTC	Item	Condition
*P0461	Fuel Level Sensor “A” Circuit Range/Performance	—

Diagnostic procedure:
1) Make sure that the battery voltage is 10.9 V or more.
2) Perform the Clear Memory Mode. <Ref. to EN(H6DO)(diag)-57, Clear Memory Mode.>
3) Drive the vehicle for the distance equal to the fuel of 30 ℓ (7.9 US gal, 6.6 Imp gal).

NOTE:
- It is acceptable to drive the vehicle intermittently.
- Do not disconnect the battery terminals while diagnosing. (Data will be cleared by disconnecting the battery terminals.)

7. DRIVE CYCLE F

DTC	Item	Condition
*P0111	Intake Air Temperature Sensor 1 Circuit Range/Performance	—

Diagnostic procedure:
1) Make sure that the engine coolant temperature is less than 30°C (86°F).

GETmeMANUALS.org

2) Drive according to the drive pattern described below.

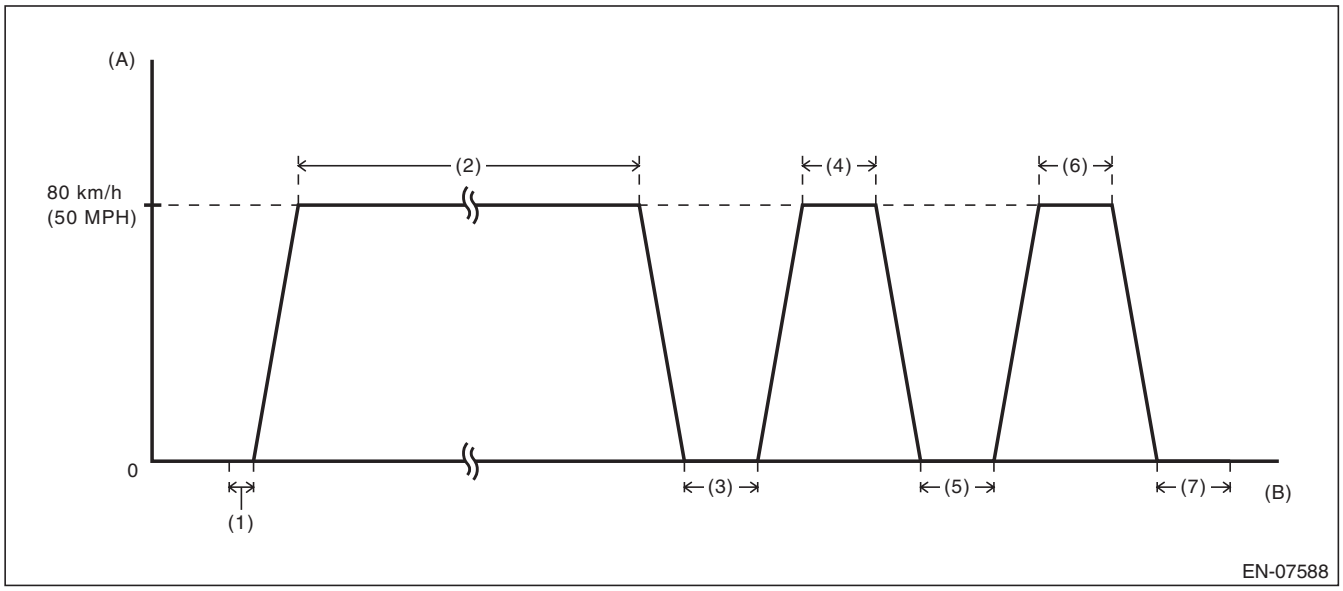

(A)	Vehicle speed	(B)	Elapsed time		
(1)	Idle the engine for 10 seconds or more after engine start.	(4)	Drive for 30 seconds or more at a constant speed of 80 km/h (50 MPH) or more.	(6)	Drive for 30 seconds or more at a constant speed of 80 km/h (50 MPH) or more.
(2)	Drive for 8 minutes or more at a constant speed of 80 km/h (50 MPH) or more.	(5)	Stop the vehicle and idle for 30 seconds or more.	(7)	Stop the vehicle and idle for 30 seconds.
(3)	Stop the vehicle and idle for 30 seconds or more.				

NOTE:
- There is no given transition time between idling and cruising.
- Driving at constant speed only on a downhill causes smaller engine load and may result in failure to obtain a right diagnostic result.
- When the engine stops while performing drive cycle F, perform it again from the state of procedure 1).

8. DRIVE CYCLE H

DTC	Item	Condition
*P050A	Cold Start Idle Air Control System Performance	—
*P050B	Cold Start Ignition Timing Performance	—

Diagnostic procedure:
1) Perform the Clear Memory Mode. <Ref. to EN(H6DO)(diag)-57, Clear Memory Mode.>
2) With the ignition switch ON (engine OFF), read the engine coolant temperature, intake air temperature and fuel temperature. <Ref. to EN(H6DO)(diag)-35, READ CURRENT DATA FOR ENGINE (NORMAL MODE), OPERATION, Subaru Select Monitor.>
3) If the values from step 2) satisfy the following two conditions, idle the engine for one minute.

Condition:
|Engine coolant temperature — Intake air temperature| ≤ 5°C (9°F)
|Engine coolant temperature — Fuel temperature| ≤ 2°C (3.6°F)

NOTE:
- If the conditions are not satisfied, turn the ignition switch to OFF and wait until the parameters are satisfied.
- Hold the select lever in “P” range or “N” range at idling.

GETmeMANUALS.org

9. DRIVE CYCLE J

DTC	Item	Condition
P2610	ECM/PCM Internal Engine Off Timer Performance	—

1) Idle the engine for 15 minutes or more.
2) Turn the ignition switch to OFF.
3) After 6 hours passed from the start of step 2), read the temporary code using the Subaru Select Monitor.
<Ref. to EN(H6DO)(diag)-43, OPERATION, Read Diagnostic Trouble Code (DTC).>

GETmeMANUALS.org

13. Clear Memory Mode

A: OPERATION

1. SUBARU SELECT MONITOR

NOTE:
- Initial diagnosis of electronic throttle control is performed after memory clearance. Wait for 10 seconds or more after turning the ignition switch to ON, and then start the engine.
- For detailed operation procedures, refer to “PC application help for Subaru Select Monitor”.

2. GENERAL SCAN TOOL

For procedures clearing memory using the general scan tool, refer to the general scan tool operation manual.

NOTE:
Initial diagnosis of electronic throttle control is performed after memory clearance. For this reason, start the engine after 10 seconds or more have elapsed since the ignition switch was turned to ON.

GETmeMANUALS.org

14. System Operation Check Mode

A: OPERATION

CAUTION:
After executing the system operation check mode, execute the Clear Memory Mode. <Ref. to EN(H6DO)(diag)-57, OPERATION, Clear Memory Mode.>

NOTE:
For detailed operation procedures, refer to “PC application help for Subaru Select Monitor”.

GETmeMANUALS.org

15. Malfunction Indicator Light

A: PROCEDURE

1. Activation of malfunction indicator light. <Ref. to EN(H6DO)(diag)-60, ACTIVATION OF MALFUNCTION INDICATOR LIGHT, Malfunction Indicator Light.>
↓
2. Malfunction indicator light does not come on. <Ref. to EN(H6DO)(diag)-62, MALFUNCTION INDICATOR LIGHT DOES NOT COME ON, Malfunction Indicator Light.>
↓
3. Malfunction indicator light does not go off. <Ref. to EN(H6DO)(diag)-64, MALFUNCTION INDICATOR LIGHT DOES NOT GO OFF, Malfunction Indicator Light.>
↓
4. Malfunction indicator light does not blink. <Ref. to EN(H6DO)(diag)-66, MALFUNCTION INDICATOR LIGHT DOES NOT BLINK, Malfunction Indicator Light.>
↓
5. Malfunction indicator light remains blinking. <Ref. to EN(H6DO)(diag)-68, MALFUNCTION INDICATOR LIGHT REMAINS BLINKING, Malfunction Indicator Light.>

GETthemANSWERS.org

B: ACTIVATION OF MALFUNCTION INDICATOR LIGHT

1) When the ignition switch is turned to ON (engine OFF), the malfunction indicator light (A) in the combination meter illuminates.

NOTE:
If the malfunction indicator light does not illuminate, perform diagnostics of the malfunction indicator light circuit or the combination meter circuit. <Ref. to EN(H6DO)(diag)-62, MALFUNCTION INDICATOR LIGHT DOES NOT COME ON, Malfunction Indicator Light.>

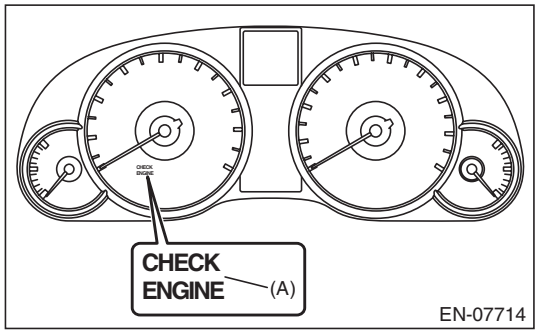

2) After starting the engine, the malfunction indicator light goes out. If it does not go off, any of the engine and emission control system has malfunction.

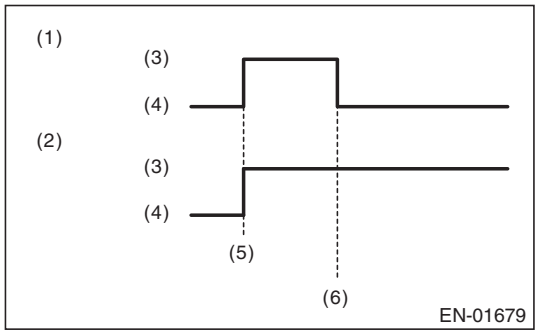

(1) No faulty
(2) Trouble occurs
(3) ON
(4) OFF
(5) Ignition switch ON
(6) Engine start

3) If the diagnostic system detects a misfire which could damage the catalyst, the malfunction indicator light will blink at a cycle of 1 Hz.

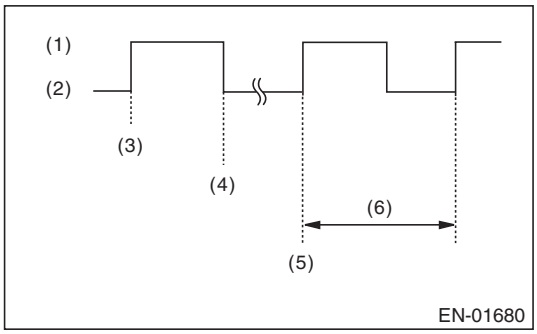

(1) ON
(2) OFF
(3) Ignition switch ON
(4) Engine start
(5) Misfire start
(6) 1 second

4) Install the delivery (test) mode fuse (A) with ignition switch to OFF.

CAUTION:
Do not use any fuses that are installed on the vehicle.

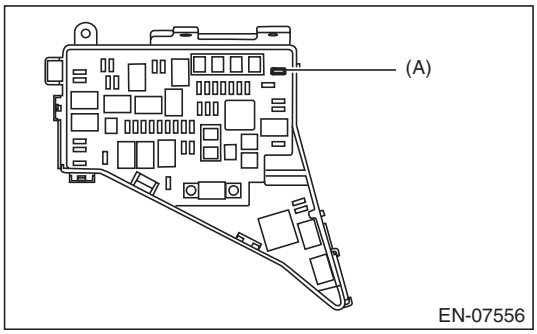

(1) When the ignition switch is turned to ON (engine OFF), the malfunction indicator light illuminates.
(2) After the engine starts, malfunction indicator light blinks in a cycle of 0.5 Hz. (During diagnosis)

GETmeMANUALS.org

(3) Malfunction indicator light blinks at a cycle of 3 Hz after diagnosis if there is no trouble. Malfunction indicator light illuminates if faulty.

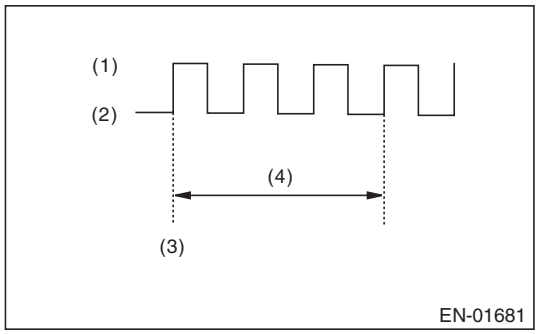

(1) ON
(2) OFF
(3) Ignition switch ON
(4) 1 second

GETthemANSWERS.org

C: MALFUNCTION INDICATOR LIGHT DOES NOT COME ON

TROUBLE SYMPTOM:

When the ignition switch is turned to ON (engine OFF), malfunction indicator light does not illuminate.

WIRING DIAGRAM:

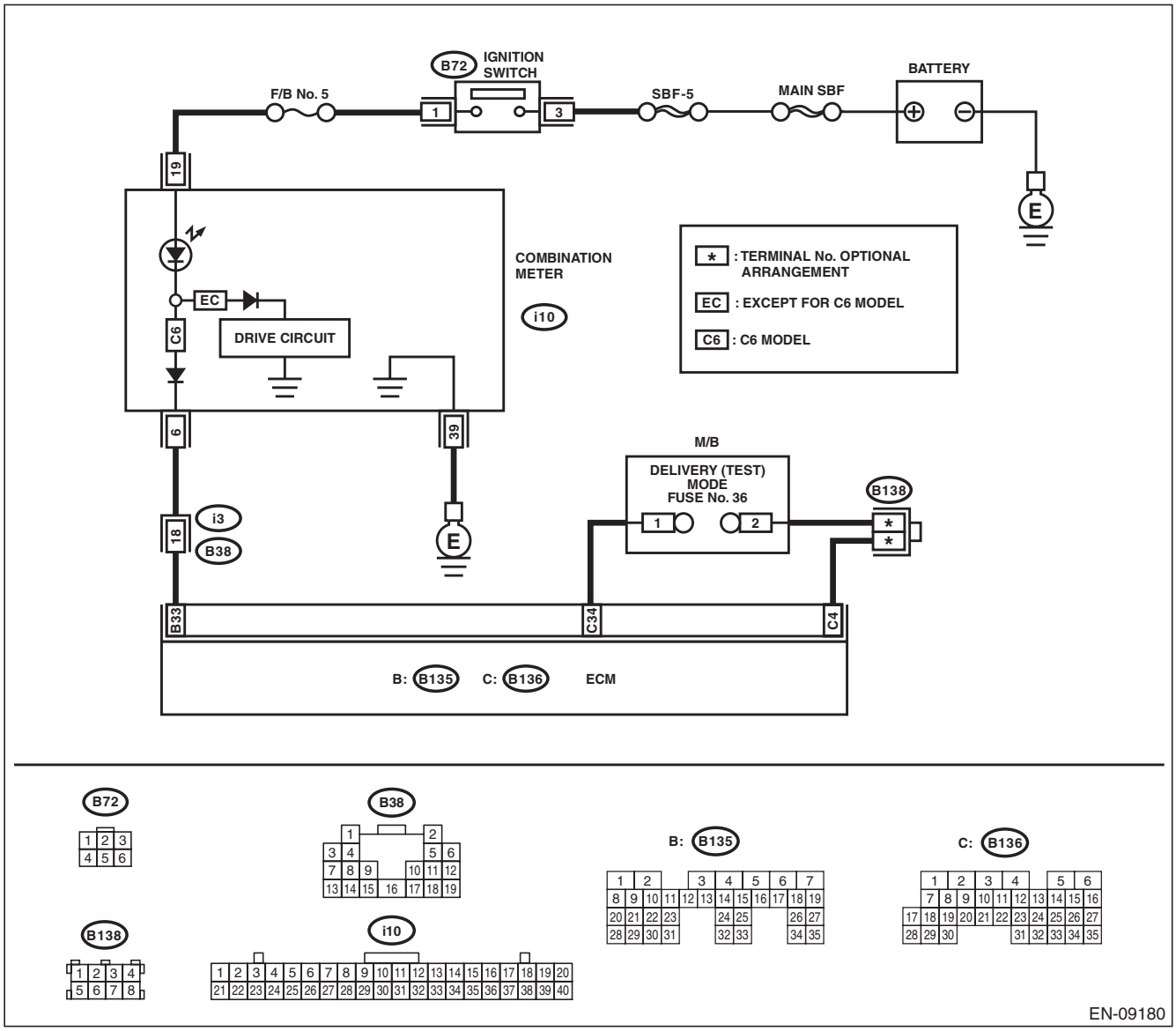

Step		Check	Yes	No
1	**CHECK VEHICLE SPECIFICATION.**	Is the vehicle except for C6 model?	Go to step **2**.	Go to step **3**.
2	**CHECK DTC.**	Is DTC of LAN system displayed? <Ref. to LAN(diag)-10, OPERATION, Read Diagnostic Trouble Code (DTC).>	Check the appropriate DTC using the “List of Diagnostic Trouble Code (DTC)”. <Ref. to LAN(diag)-32, List of Diagnostic Trouble Code (DTC).>	Replace the meter case assembly of combination meter. <Ref. to IDI-21, Combination Meter.>

GETmeMANUALS.org

Step		Check	Yes	No
3	**CHECK OUTPUT SIGNAL OF ECM.** 1) Turn the ignition switch to OFF. 2) Disconnect the connector from ECM. 3) Turn the ignition switch to ON. 4) Measure the voltage between ECM connector and chassis ground. ***Connector & terminal*** ***(B135) No. 33 (+) — Chassis ground (–):***	Is the voltage 10 V or more?	Go to step **7**.	Go to step **4**.
4	**CHECK HARNESS BETWEEN COMBINATION METER AND IGNITION SWITCH CONNECTOR.** 1) Turn the ignition switch to OFF. 2) Remove the combination meter. <Ref. to IDI-21, Combination Meter.> 3) Turn the ignition switch to ON. 4) Measure the voltage between combination meter connector and chassis ground. ***Connector & terminal*** ***(i10) No. 19 (+) — Chassis ground (–):***	Is the voltage 10 V or more?	Go to step **5**.	Check the following item and repair if necessary. NOTE: • Blown out of fuse • Open circuit or short circuit to ground in harness of power supply circuit
5	**CHECK HARNESS BETWEEN ECM AND COMBINATION METER CONNECTOR.** Measure the resistance of harness between ECM and combination meter connector. ***Connector & terminal*** ***(B135) No. 33 — (i10) No. 6:***	Is the resistance less than 1 Ω?	Go to step **6**.	Repair the harness and connector. NOTE: In this case, repair the following item: • Open circuit in harness between ECM and combination meter connector • Poor contact of coupling connector
6	**CHECK FOR POOR CONTACT.** Check for poor contact of combination meter connector.	Is there poor contact of combination meter connector?	Repair the poor contact of combination meter connector.	Replace the meter case assembly of combination meter. <Ref. to IDI-21, Combination Meter.>
7	**CHECK ECM CONNECTOR.** Check the connection of ECM connector.	Is the ECM connector correctly connected?	Go to step **8**.	Connect the ECM connector correctly.
8	**CHECK FOR POOR CONTACT.** Check for poor connection by shaking or pulling ECM connector and harness.	Does the malfunction indicator light illuminate?	Repair the poor contact of ECM connector.	Replace the ECM. <Ref. to FU(H6DO)-54, Engine Control Module (ECM).>

GETmeMANUALS.org

D: MALFUNCTION INDICATOR LIGHT DOES NOT GO OFF

TROUBLE SYMPTOM:

Although malfunction indicator light comes on when the engine runs, DTC is not shown on the Subaru Select Monitor or general scan tool display.

WIRING DIAGRAM:

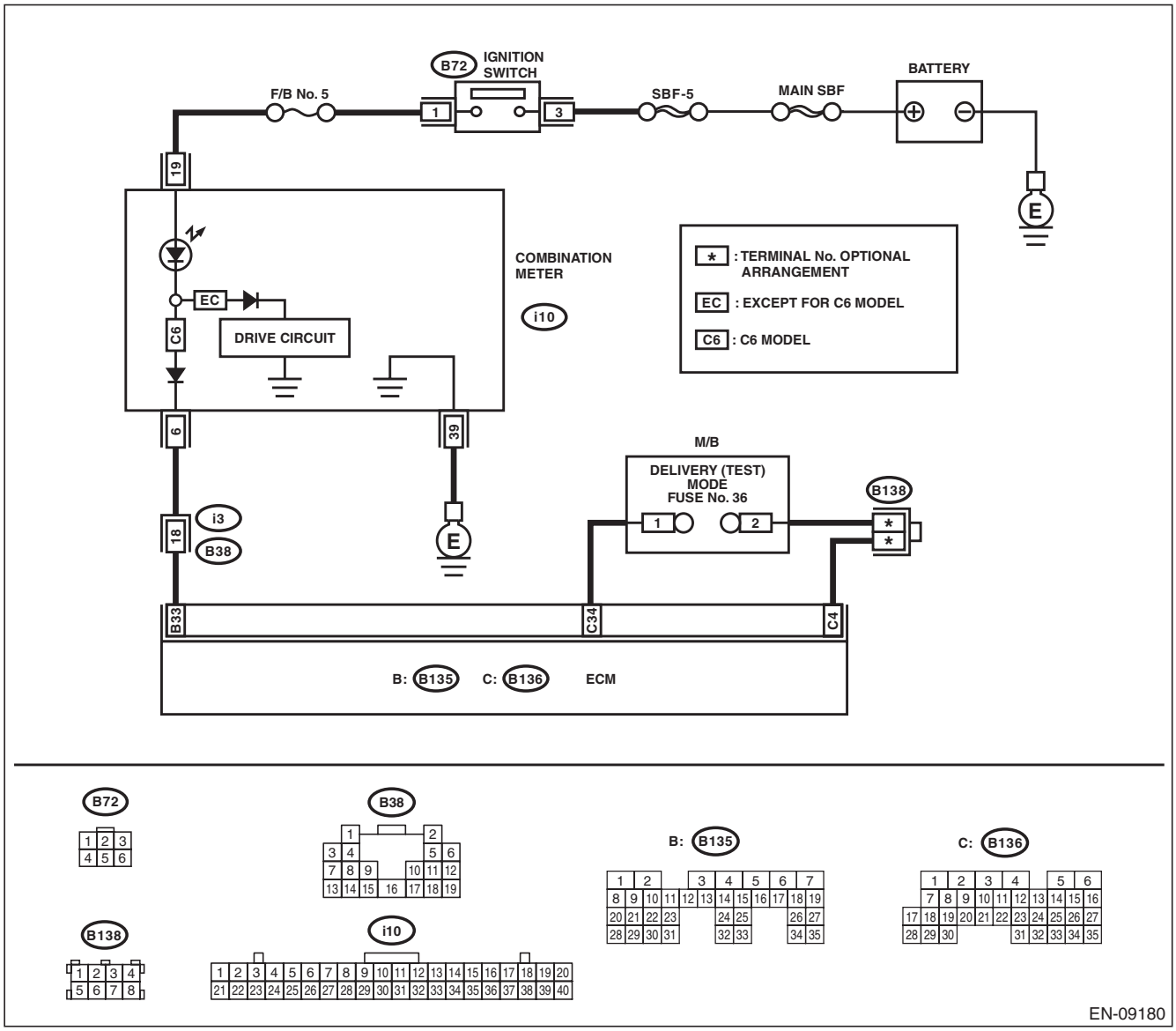

Step	Check	Yes	No
1 CHECK DTC.	Is DTC of engine or LAN system displayed? <Ref. to EN(H6DO)(diag)-43, OPERATION, Read Diagnostic Trouble Code (DTC).>	Check the appropriate DTC using the “List of Diagnostic Trouble Code (DTC)”. <Ref. to EN(H6DO)(diag)-85, List of Diagnostic Trouble Code (DTC).> <Ref. to LAN(diag)-32, List of Diagnostic Trouble Code (DTC).>	Go to step **2**.

GETthemANSWERS.org

Step		Check	Yes	No
2	**CHECK VEHICLE SPECIFICATION.**	Is the vehicle except for C6 model?	Go to step **3**.	Go to step **4**.
3	**CHECK COMBINATION METER.** Perform the self-diagnosis for combination meter system. <Ref. to IDI-6, SELF-DIAGNOSIS DISPLAY MODE, OPERATION, Combination Meter System.>	Does the malfunction indicator light illuminate and go off normally?	Replace the ECM. <Ref. to FU(H6DO)-54, Engine Control Module (ECM).>	Replace the meter case assembly of combination meter. <Ref. to IDI-21, Combination Meter.>
4	**CHECK HARNESS BETWEEN ECM AND COMBINATION METER CONNECTOR.** 1) Turn the ignition switch to OFF. 2) Disconnect the connector from ECM. 3) Turn the ignition switch to ON.	Does the malfunction indicator light illuminate?	Go to step **5**.	Replace the ECM. <Ref. to FU(H6DO)-54, Engine Control Module (ECM).>
5	**CHECK HARNESS BETWEEN ECM AND COMBINATION METER CONNECTOR.** 1) Turn the ignition switch to OFF. 2) Remove the combination meter. <Ref. to IDI-21, Combination Meter.> 3) Measure the resistance between ECM and chassis ground. ***Connector & terminal*** ***(B135) No. 33 — Chassis ground:***	Is the resistance 1 MΩ or more?	Replace the meter case assembly of combination meter. <Ref. to IDI-21, Combination Meter.>	Repair the ground short circuit of harness between ECM and combination meter connector.

GETmeMANUALS.org

E: MALFUNCTION INDICATOR LIGHT DOES NOT BLINK

DIAGNOSIS:

- The malfunction indicator light circuit is open or shorted.
- The delivery (test) mode fuse circuit is open.

TROUBLE SYMPTOM:

Malfunction indicator light does not blink during Inspection Mode.

WIRING DIAGRAM:

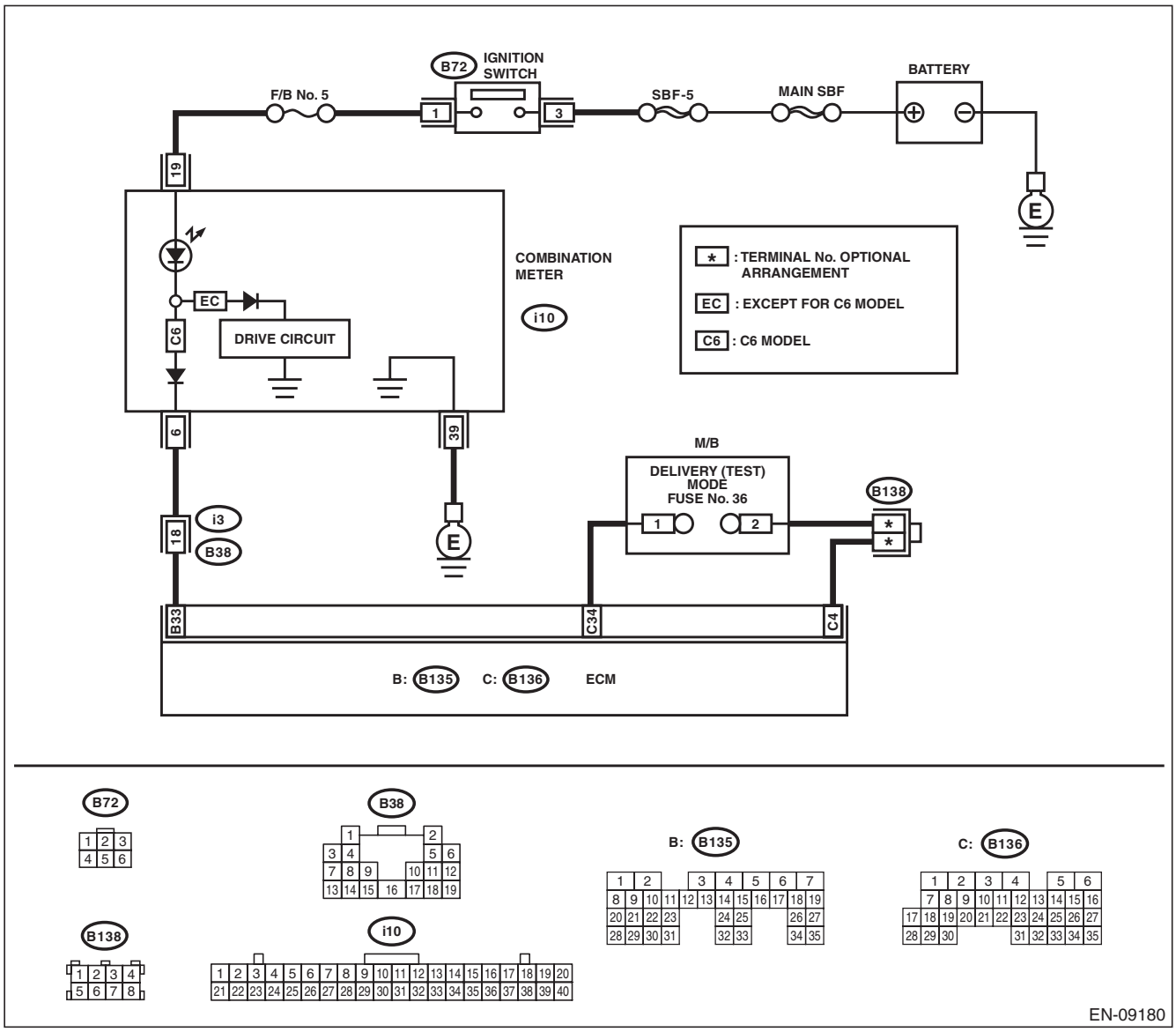

GETmeMANUALS.org

	Step	Check	Yes	No
1	**CHECK STATUS OF MALFUNCTION INDICATOR LIGHT.** 1) Turn the ignition switch to OFF. 2) Check the delivery (test) mode fuse is removed. 3) Turn the ignition switch to ON. (engine OFF)	Does the malfunction indicator light illuminate?	Go to step **2**.	Repair the malfunction indicator light circuit. <Ref. to EN(H6DO)(diag)-62, MALFUNCTION INDICATOR LIGHT DOES NOT COME ON, Malfunction Indicator Light.>
2	**CHECK VEHICLE SPECIFICATION.**	Is the vehicle except for C6 model?	Go to step **4**.	Go to step **3**.
3	**CHECK HARNESS BETWEEN ECM AND COMBINATION METER CONNECTOR.** 1) Turn the ignition switch to OFF. 2) Disconnect the connector from ECM. 3) Turn the ignition switch to ON.	Does the malfunction indicator light illuminate?	Repair the ground short circuit of harness between ECM and combination meter connector.	Go to step **4**.
4	**CHECK HARNESS BETWEEN ECM AND DELIVERY (TEST) MODE FUSE.** 1) Turn the ignition switch to OFF. 2) Disconnect the connector from ECM. 3) Install the delivery (test) mode fuse. **CAUTION:** **Do not use any fuses that are installed on the vehicle.** 4) Measure the resistance of harness between ECM connectors. ***Connector & terminal*** ***(B136) No. 34 — (B136) No. 4:***	Is the resistance less than 1 Ω?	Go to step **5**.	Repair the harness and connector. NOTE: In this case, repair the following item: • Open circuit of harness between ECM and delivery (test) mode fuse • Poor contact of joint connector
5	**CHECK FOR POOR CONTACT.** Check for poor contact of ECM connector.	Is there poor contact of ECM connector?	Repair the poor contact of ECM connector.	Replace the ECM. <Ref. to FU(H6DO)-54, Engine Control Module (ECM).>

GETtheMANUALS.org

F: MALFUNCTION INDICATOR LIGHT REMAINS BLINKING

DIAGNOSIS:
The delivery (test) mode fuse circuit is short-circuited to ground.
TROUBLE SYMPTOM:
Malfunction indicator light blinks when delivery (test) mode fuse is not connected.
WIRING DIAGRAM:

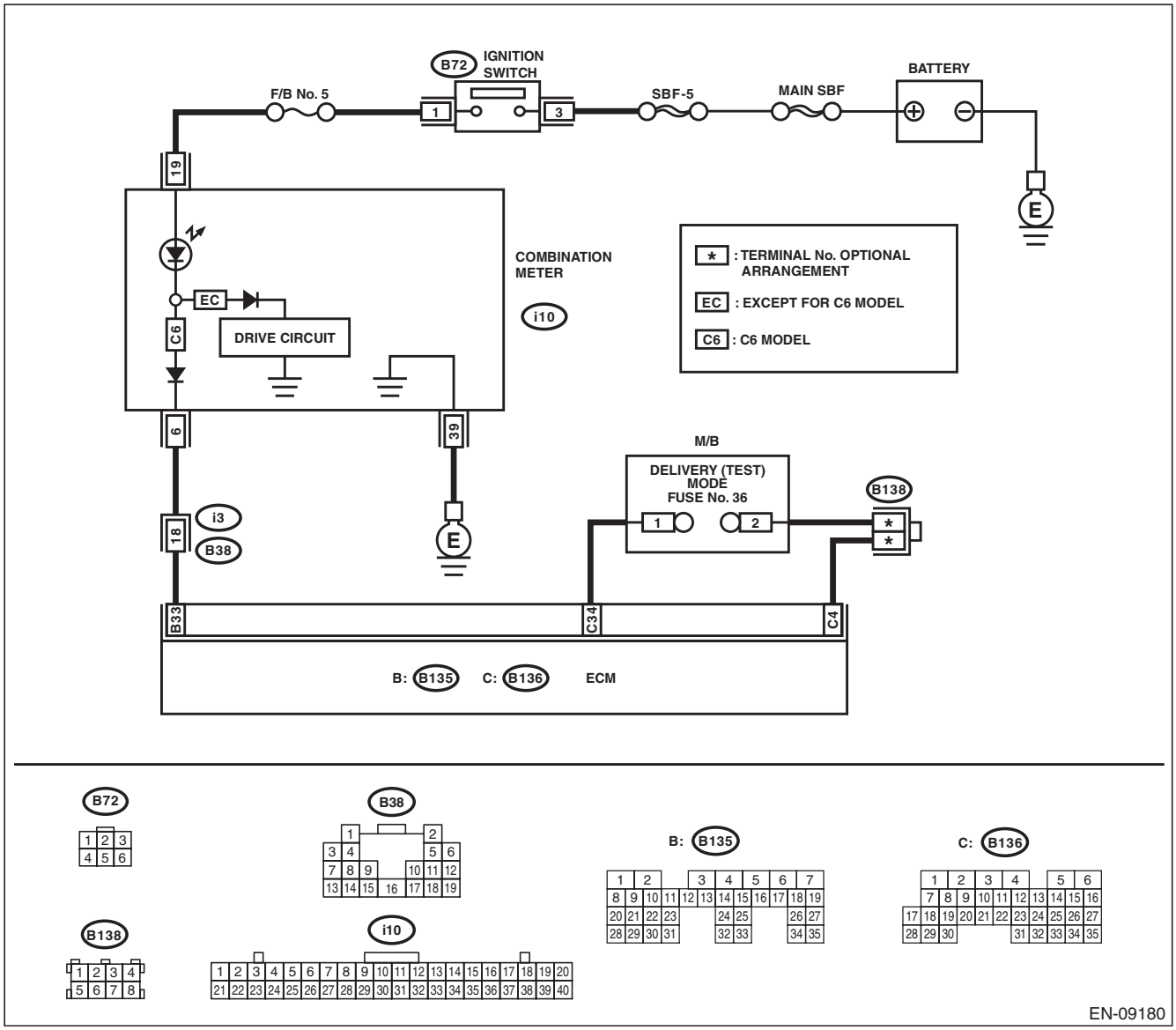

EN-09180

Step	Check	Yes	No
1 **CHECK DELIVERY (TEST) MODE FUSE.** 1) Check the delivery (test) mode fuse is removed. 2) Turn the ignition switch to ON.	Does the malfunction indicator light blink?	Go to step **2**.	System is normal. NOTE: Malfunction indicator light blinks at a cycle of 3 Hz when delivery (test) mode fuse is attached.

GETmeMANUALS.org

Step		Check	Yes	No
2	**CHECK HARNESS BETWEEN ECM AND DELIVERY (TEST) MODE FUSE.** 1) Turn the ignition switch to OFF. 2) Disconnect the connector from ECM. 3) Measure the resistance between ECM and chassis ground. ***Connector & terminal*** ***(B136) No. 34 — Chassis ground:***	Is the resistance 1 MΩ or more?	Replace the ECM. <Ref. to FU(H6DO)-54, Engine Control Module (ECM).>	Repair the short circuit to ground in harness between ECM and delivery (test) mode fuse.

GETmeMANUALS.org

16. Diagnostics for Engine Starting Failure

A: PROCEDURE

1. Check of the fuel amount
↓
2. Inspection of starter motor circuit. <Ref. to EN(H6DO)(diag)-71, STARTER MOTOR CIRCUIT, Diagnostics for Engine Starting Failure.>
↓
3. Inspection of ECM power supply and ground line. <Ref. to EN(H6DO)(diag)-75, CHECK POWER SUPPLY AND GROUND LINE OF ENGINE CONTROL MODULE (ECM), Diagnostics for Engine Starting Failure.>
↓
4. Inspection of ignition control system. <Ref. to EN(H6DO)(diag)-77, IGNITION CONTROL SYSTEM, Diagnostics for Engine Starting Failure.>
↓
5. Inspection of fuel pump circuit. <Ref. to EN(H6DO)(diag)-80, FUEL PUMP CIRCUIT, Diagnostics for Engine Starting Failure.>
↓
6. Inspection of fuel injector circuit. <Ref. to EN(H6DO)(diag)-81, FUEL INJECTOR CIRCUIT, Diagnostics for Engine Starting Failure.>

GETmeMANUALS.org

B: STARTER MOTOR CIRCUIT

CAUTION:
After servicing or replacing faulty parts, perform Clear Memory Mode <Ref. to EN(H6DO)(diag)-57, OPERATION, Clear Memory Mode.>, and Inspection Mode <Ref. to EN(H6DO)(diag)-44, PROCEDURE, Inspection Mode.>.
WIRING DIAGRAM:

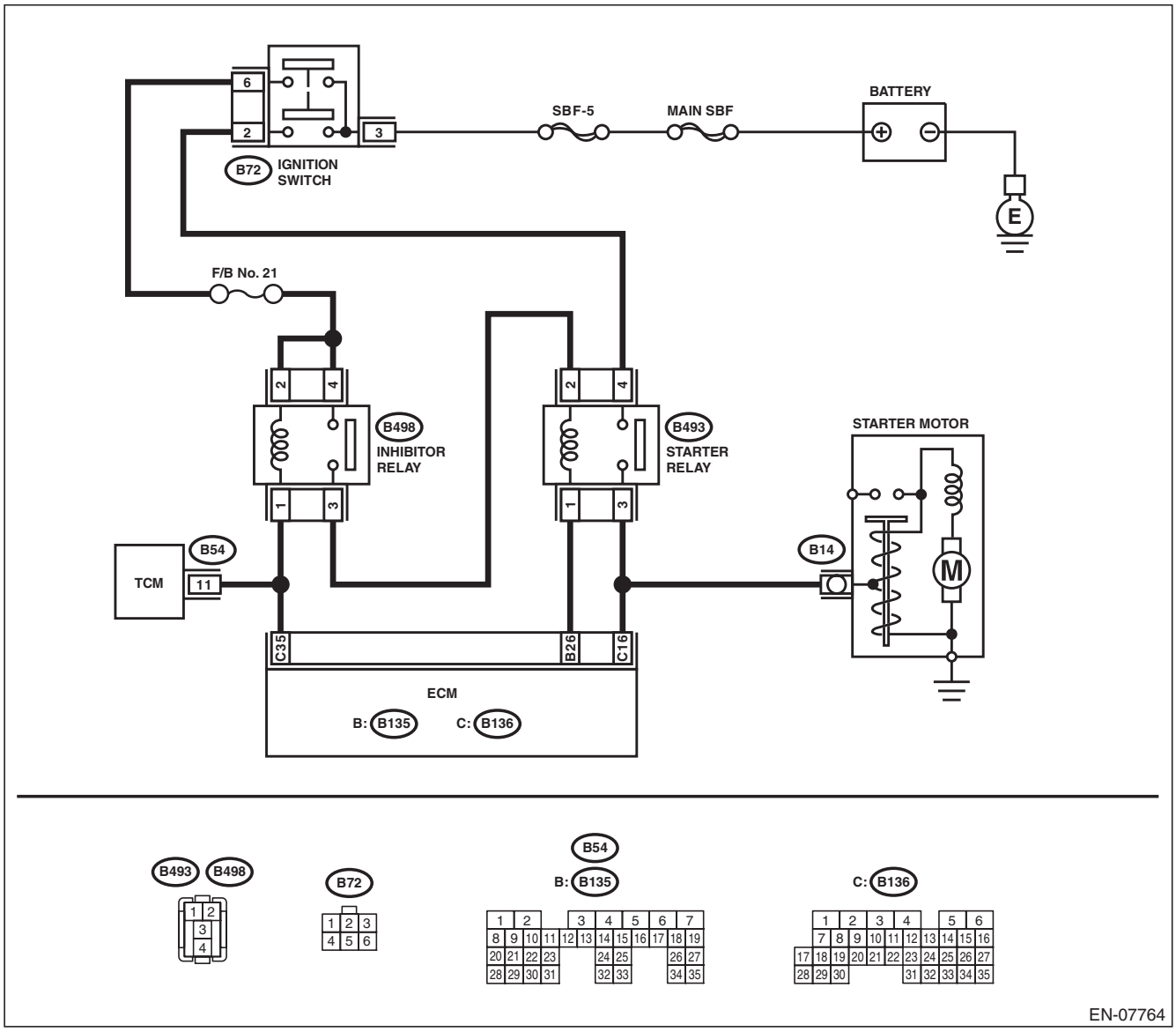

Step		Check	Yes	No
1	**CHECK BATTERY.** Check the battery voltage.	Is the voltage 12 V or more?	Go to step **2**.	Charge or replace the battery.
2	**CHECK OPERATION OF STARTER MOTOR.**	Does the starter motor operate?	Go to step **3**.	Go to step **4**.

GETmeMANUALS.org

Step		Check	Yes	No
3	**CHECK DTC.**	Is DTC displayed? <Ref. to EN(H6DO)(diag)-43, OPERATION, Read Diagnostic Trouble Code (DTC).>	Check the appropriate DTC using the “List of Diagnostic Trouble Code (DTC)”. <Ref. to EN(H6DO)(diag)-85, List of Diagnostic Trouble Code (DTC).>	The circuit has returned to a normal condition at this time. Reproduce the failure, and then perform the diagnosis again. NOTE: In this case, temporary poor contact of connector, temporary open or short circuit of harness may be the cause.
4	**CHECK INPUT SIGNAL FOR STARTER MOTOR.** 1) Turn the ignition switch to OFF. 2) Disconnect the connector from starter motor. 3) Place the select lever in “P” range or “N” range. 4) Turn the ignition switch to START. 5) Measure the voltage between the starter motor connector and the engine ground. ***Connector & terminal*** ***(B14) No. 1 (+) — Engine ground (–):***	Is the voltage 10 V or more?	Check the starter motor. <Ref. to SC(H4SO)-9, Starter.>	Go to step **5**.
5	**CHECK INPUT SIGNAL FOR STARTER MOTOR.** 1) Place the select lever in “P” range or “N” range. 2) Turn the ignition switch to START. 3) Measure the voltage between starter relay connector and chassis ground. ***Connector & terminal*** ***(B493) No. 3 (+) — Chassis ground (–):***	Is the voltage 10 V or more?	Repair the open circuit of the harness between starter relay connector and starter motor.	Go to step **6**.
6	**CHECK HARNESS BETWEEN BATTERY AND IGNITION SWITCH CONNECTOR.** 1) Turn the ignition switch to OFF. 2) Disconnect the connector from ignition switch. 3) Measure the voltage between ignition switch connector and chassis ground. ***Connector & terminal*** ***(B72) No. 3 (+) — Chassis ground (–):***	Is the voltage 10 V or more?	Go to step **7**.	Repair the power supply circuit.
7	**CHECK IGNITION SWITCH.** Measure the resistance between ignition switch terminals after turning the ignition switch to START position. ***Terminals*** ***No. 3 — No. 2:*** ***No. 3 — No. 6:***	Is the resistance less than 1 Ω?	Go to step **8**.	Replace the ignition switch. <Ref. to SL-58, REPLACEMENT, Ignition Key Lock.>

GETmeMANUALS.org

Step		Check	Yes	No
8	**CHECK INPUT VOLTAGE OF STARTER RELAY.** 1) Remove the starter relay. 2) Connect the connector to ignition switch. 3) Turn the ignition switch to START. 4) Measure the voltage between starter relay connector and chassis ground. ***Connector & terminal*** ***(B493) No. 4 (+) — Chassis ground (–):***	Is the voltage 10 V or more?	Go to step **9**.	Repair the open circuit of harness between starter relay connector and ignition switch connector.
9	**CHECK STARTER RELAY.** 1) Connect the battery to starter relay terminals No. 1 and No. 2. 2) Measure the resistance between starter relay terminals. ***Terminals*** ***No. 3 — No. 4:***	Is the resistance less than 1 Ω?	Go to step **10**.	Replace the starter relay.
10	**CHECK HARNESS BETWEEN ECM AND STARTER RELAY CONNECTOR.** 1) Turn the ignition switch to OFF. 2) Disconnect the connector from ECM. 3) Measure the resistance of harness between ECM and starter relay connector. ***Connector & terminal*** ***(B135) No. 26 — (B493) No. 1:*** ***(B136) No. 16 — (B493) No. 3:***	Is the resistance less than 1 Ω?	Go to step **11**.	Repair the open circuit of harness between ECM and starter relay connector.
11	**CHECK INPUT VOLTAGE OF STARTER RELAY.** 1) Connect the connector to ECM. 2) Place the select lever in “P” range or “N” range. 3) Turn the ignition switch to START. 4) Measure the voltage between starter relay connector and chassis ground. ***Connector & terminal*** ***(B493) No. 2 (+) — Chassis ground (–):***	Is the voltage 10 V or more?	Go to step **12**.	Go to step **13**.
12	**CHECK HARNESS BETWEEN ECM AND INHIBITOR RELAY CONNECTOR.** 1) Turn the ignition switch to OFF. 2) Disconnect the inhibitor relay connector. 3) Measure the resistance of harness between ECM and inhibitor relay connector. ***Connector & terminal*** ***(B136) No. 35 — (B498) No. 1:***	Is the resistance less than 1 Ω?	Check the ECM power supply and ground line. <Ref. to EN(H6DO)(diag)-75, CHECK POWER SUPPLY AND GROUND LINE OF ENGINE CONTROL MODULE (ECM), Diagnostics for Engine Starting Failure.>	Repair the open circuit of harness between ECM and inhibitor relay connector.
13	**CHECK INPUT VOLTAGE OF INHIBITOR RELAY.** 1) Turn the ignition switch to OFF. 2) Disconnect the inhibitor relay connector. 3) Turn the ignition switch to START. 4) Measure the voltage between inhibitor relay connector and chassis ground. ***Connector & terminal*** ***(B498) No. 2 (+) — Chassis ground (–):*** ***(B498) No. 4 (+) — Chassis ground (–):***	Is the voltage 10 V or more?	Go to step **14**.	Check the following item and repair if necessary. • Blown out of fuse (F/B No. 21) • Open or ground short circuit of harness between ignition switch connector and inhibitor relay connector

GETthemANSWERS.org

Step		Check	Yes	No
14	**CHECK INHIBITOR RELAY.** 1) Connect the battery to inhibitor relay terminals No. 1 and No. 2. 2) Measure the resistance between inhibitor relay terminals. ***Terminals*** ***No. 3 — No. 4:***	Is the resistance less than 1 Ω?	Go to step **15**.	Replace the inhibitor relay.
15	**CHECK HARNESS BETWEEN INHIBITOR RELAY CONNECTOR AND STARTER RELAY CONNECTOR.** 1) Turn the ignition switch to OFF. 2) Measure the resistance of harness between inhibitor relay connector and starter relay connector. ***Connector & terminal*** ***(B498) No. 3 — (B493) No. 2:***	Is the resistance less than 1 Ω?	Repair the open circuit of harness between TCM and inhibitor relay connector.	Repair the open circuit of harness between inhibitor relay connector and starter relay connector.

GETthemANSWERS.org

C: CHECK POWER SUPPLY AND GROUND LINE OF ENGINE CONTROL MODULE (ECM)

CAUTION:
After servicing or replacing faulty parts, perform Clear Memory Mode <Ref. to EN(H6DO)(diag)-57, OPERATION, Clear Memory Mode.>, and Inspection Mode <Ref. to EN(H6DO)(diag)-44, PROCEDURE, Inspection Mode.>.
WIRING DIAGRAM:

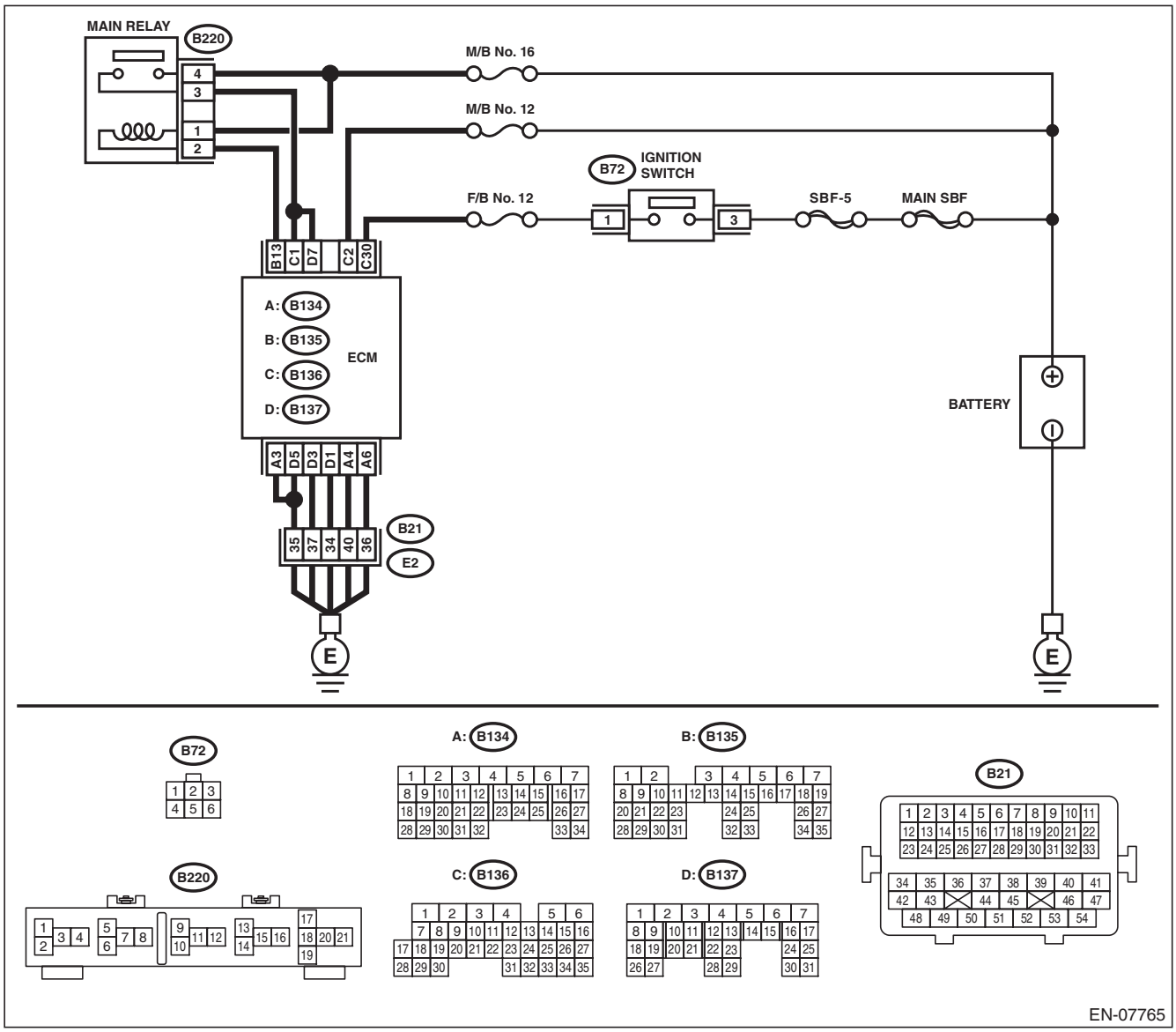

Step		Check	Yes	No
1	**CHECK MAIN RELAY.** 1) Turn the ignition switch to OFF. 2) Remove the main relay. 3) Connect the battery to main relay terminals No. 1 and No. 2. 4) Measure the resistance between main relay terminals. ***Terminals*** ***No. 3 — No. 4:***	Is the resistance less than 1 Ω?	Go to step **2**.	Replace the main relay. <Ref. to FU(H6DO)-55, Main Relay.>

GETthemANSWERS.org

Step		Check	Yes	No
2	**CHECK GROUND CIRCUIT FOR ECM.** 1) Disconnect the connector from ECM. 2) Measure the resistance of harness between ECM connector and chassis ground. ***Connector & terminal*** ***(B134) No. 3 — Chassis ground:*** ***(B134) No. 4 — Chassis ground:*** ***(B134) No. 6 — Chassis ground:*** ***(B137) No. 1 — Chassis ground:*** ***(B137) No. 3 — Chassis ground:*** ***(B137) No. 5 — Chassis ground:***	Is the resistance less than 5 Ω?	Go to step **3**.	Repair the harness and connector. NOTE: In this case, repair the following item: • Open circuit of harness between ECM connector and engine ground terminal. • Poor contact of coupling connector	
3	**CHECK INPUT VOLTAGE OF ECM.** 1) Turn the ignition switch to ON. 2) Measure the voltage between ECM connector and chassis ground. ***Connector & terminal*** ***(B136) No. 2 (+) — Chassis ground (–):*** ***(B136) No. 30 (+) — Chassis ground (–):***	Is the voltage 10 V or more?	Go to step **4**.	Repair the open or ground short circuit of harness of power supply circuit.	
4	**CHECK INPUT VOLTAGE OF MAIN RELAY.** Measure the voltage between main relay connector and chassis ground. ***Connector & terminal*** ***(B220) No. 1 (+) — Chassis ground (–):*** ***(B220) No. 4 (+) — Chassis ground (–):***	Is the voltage 10 V or more?	Go to step **5**.	Repair the open or ground short circuit of harness of power supply circuit.	
5	**CHECK INPUT VOLTAGE OF ECM.** 1) Turn the ignition switch to OFF. 2) Install the main relay. 3) Turn the ignition switch to ON. 4) Measure the voltage between ECM and chassis ground. ***Connector & terminal*** ***(B135) No. 13 (+) — Chassis ground (–):***	Is the voltage 10 V or more?	Go to step **6**.	Repair the open circuit of harness between ECM connector and main relay connector.	
6	**CHECK INPUT VOLTAGE OF ECM.** 1) Turn the ignition switch to OFF. 2) Connect the connector to ECM. 3) Turn the ignition switch to ON. 4) Measure the voltage between ECM connector and chassis ground. ***Connector & terminal*** ***(B136) No. 1 (+) — Chassis ground (–):*** ***(B137) No. 7 (+) — Chassis ground (–):***	Is the voltage 10 V or more?	Check ignition control system. <Ref. to EN(H6DO)(diag)-77, IGNITION CONTROL SYSTEM, Diagnostics for Engine Starting Failure.>	Repair the harness and connector. NOTE: In this case, repair the following item: • Open circuit in harness between ECM connector and fuel injector connector • Poor contact of main relay connector • Poor contact of ECM connector	

GETmeMANUALS.org

D: IGNITION CONTROL SYSTEM

CAUTION:
After servicing or replacing faulty parts, perform Clear Memory Mode <Ref. to EN(H6DO)(diag)-57, OPERATION, Clear Memory Mode.>, and Inspection Mode <Ref. to EN(H6DO)(diag)-44, PROCEDURE, Inspection Mode.>.
WIRING DIAGRAM:

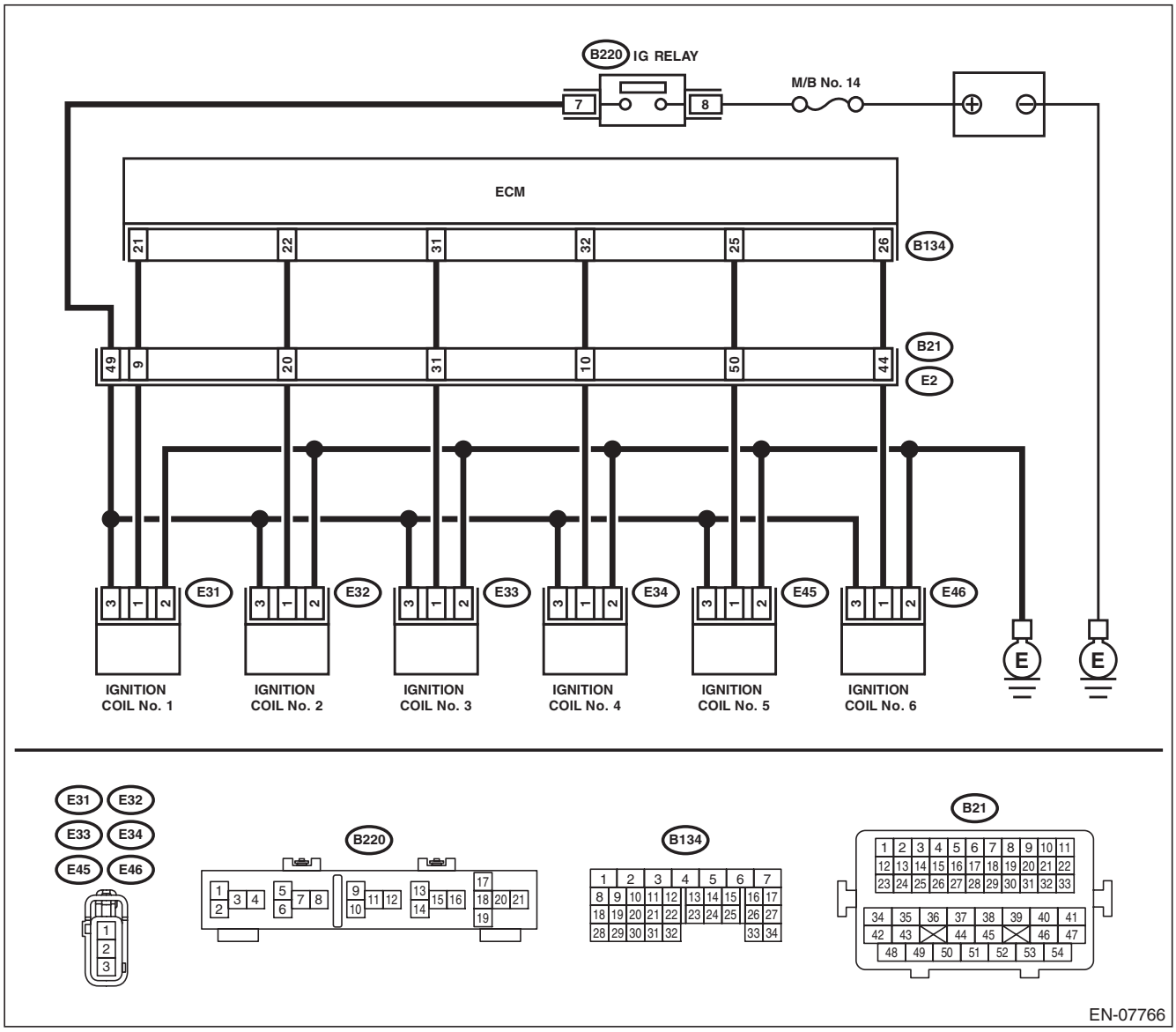

Step		Check	Yes	No
1	**CHECK SPARK PLUG CONDITION.** 1) Remove the spark plug. <Ref. to IG(H6DO)-4, REMOVAL, Spark Plug.> 2) Check the spark plug condition. <Ref. to IG(H6DO)-5, INSPECTION, Spark Plug.>	Is the spark plug condition normal?	Go to step **2**.	Replace the spark plug. <Ref. to IG(H6DO)-4, Spark Plug.>

GETtheMANUALS.com

	Step	Check	Yes	No
2	**CHECK IGNITION SYSTEM FOR SPARKS.** 1) Connect the spark plug to ignition coil. 2) Release the fuel pressure. <Ref. to FU(H6DO)-59, RELEASING OF FUEL PRESSURE, PROCEDURE, Fuel.> 3) Contact the spark plug thread portion to engine. 4) While opening the throttle valve fully, start the engine to check if spark occurs at each cylinder.	Does spark occur at each cylinder?	Check fuel pump system. <Ref. to EN(H6DO)(diag)-80, FUEL PUMP CIRCUIT, Diagnostics for Engine Starting Failure.>	Go to step **3**.
3	**CHECK IGNITION COIL POWER SUPPLY CIRCUIT.** 1) Turn the ignition switch to OFF. 2) Disconnect the connector from ignition coil. 3) Turn the ignition switch to ON. 4) Measure the voltage between ignition coil connector and engine ground. ***Connector & terminal*** ***(E31) No. 3 (+) — Engine ground (–):*** ***(E32) No. 3 (+) — Engine ground (–):*** ***(E33) No. 3 (+) — Engine ground (–):*** ***(E34) No. 3 (+) — Engine ground (–):*** ***(E45) No. 3 (+) — Engine ground (–):*** ***(E46) No. 3 (+) — Engine ground (–):***	Is the voltage 10 V or more?	Go to step **4**.	Repair the harness and connector. NOTE: In this case, repair the following item: • Open circuit or short circuit to ground in harness of power supply circuit • Blown out of fuse (M/B No. 14) • Poor contact of coupling connector
4	**CHECK HARNESS OF IGNITION COIL GROUND CIRCUIT.** 1) Turn the ignition switch to OFF. 2) Measure the resistance of harness between ignition coil connector and engine ground. ***Connector & terminal*** ***(E31) No. 2 — Engine ground:*** ***(E32) No. 2 — Engine ground:*** ***(E33) No. 2 — Engine ground:*** ***(E34) No. 2 — Engine ground:*** ***(E45) No. 2 — Engine ground:*** ***(E46) No. 2 — Engine ground***	Is the resistance less than 5 Ω?	Go to step **5**.	Repair the open circuit in harness between ignition coil connector and engine grounding terminal.
5	**CHECK HARNESS BETWEEN ECM AND IGNITION COIL CONNECTOR.** 1) Disconnect the connector from ECM. 2) Measure the resistance of harness between ECM and ignition coil connector. ***Connector & terminal*** ***(B134) No. 21 — (E31) No. 1:*** ***(B134) No. 22 — (E32) No. 1:*** ***(B134) No. 31 — (E33) No. 1:*** ***(B134) No. 32 — (E34) No. 1:*** ***(B134) No. 25 — (E45) No. 1:*** ***(B134) No. 26 — (E46) No. 1:***	Is the resistance less than 1 Ω?	Go to step **6**.	Repair the harness and connector. NOTE: In this case, repair the following item: • Open circuit of harness between ECM connector and the ignition coil connector • Poor contact of coupling connector
6	**CHECK HARNESS BETWEEN ECM AND IGNITION COIL CONNECTOR.** Measure the resistance of harness between ECM connector and chassis ground. ***Connector & terminal:*** ***(B134) No. 21 — Chassis ground:*** ***(B134) No. 22 — Chassis ground:*** ***(B134) No. 31 — Chassis ground:*** ***(B134) No. 32 — Chassis ground:*** ***(B134) No. 25 — Chassis ground:*** ***(B134) No. 26 — Chassis ground:***	Is the resistance 1 MΩ or more?	Go to step **7**.	Repair the ground short circuit of harness between ECM connector and ignition coil connector.

GETmeMANUALS.org

Step		Check	Yes	No
7	**CHECK FOR POOR CONTACT.** Check for poor contact of ECM connector.	Is there poor contact of ECM connector?	Repair the poor contact of ECM connector.	Replace the ignition coil. <Ref. to IG(H6DO)-7, Ignition Coil.>

GETmeMANUALS.org

E: FUEL PUMP CIRCUIT

CAUTION:
After servicing or replacing faulty parts, perform Clear Memory Mode <Ref. to EN(H6DO)(diag)-57, OPERATION, Clear Memory Mode.>, and Inspection Mode <Ref. to EN(H6DO)(diag)-44, PROCEDURE, Inspection Mode.>.

Step		Check	Yes	No
1	**CHECK OPERATING SOUND OF FUEL PUMP.** Make sure that the fuel pump operates for two seconds when turning the ignition switch to ON. NOTE: Fuel pump operation can be executed using the Subaru Select Monitor. For detailed procedures, refer to “System Operation Check”. <Ref. to EN(H6DO)(diag)-58, System Operation Check Mode.>	Does the fuel pump emit operating sound?	Check the fuel injector circuit. <Ref. to EN(H6DO)(diag)-81, FUEL INJECTOR CIRCUIT, Diagnostics for Engine Starting Failure.>	Display the DTC. <Ref. to EN(H6DO)(diag)-43, OPERATION, Read Diagnostic Trouble Code (DTC).>

GETtheMANUALS.org

F: FUEL INJECTOR CIRCUIT

CAUTION:
- **Check or repair only faulty parts.**
- **After servicing or replacing faulty parts, perform Clear Memory Mode <Ref. to EN(H6DO)(diag)-57, OPERATION, Clear Memory Mode.>, and Inspection Mode <Ref. to EN(H6DO)(diag)-44, PROCEDURE, Inspection Mode.>.**

WIRING DIAGRAM:

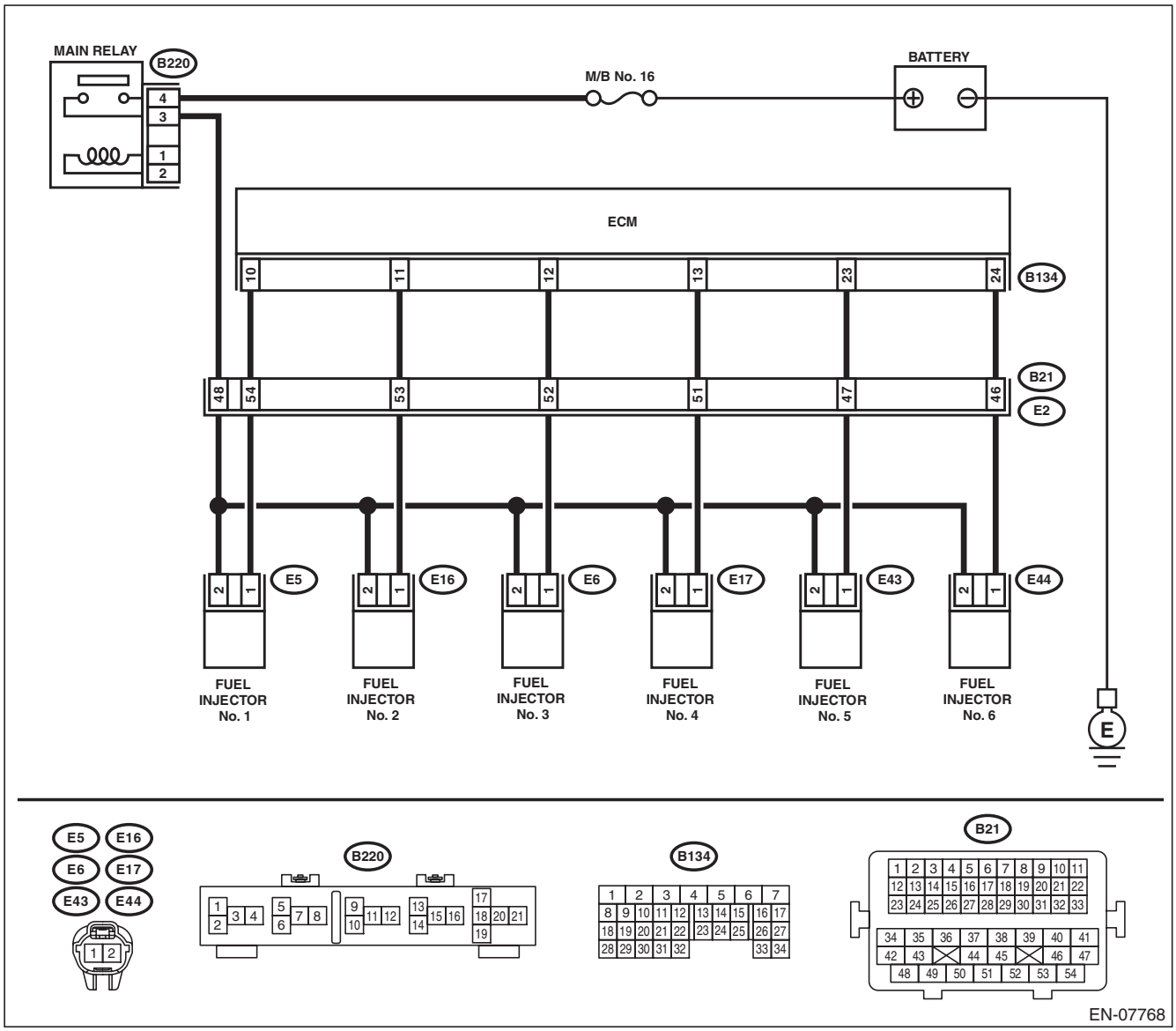

Step		Check	Yes	No
1	**CHECK OPERATION OF EACH FUEL INJECTOR.** While cranking the engine, check each fuel injector emits operating sound. Use a sound scope or listen by attaching a screwdriver to the injector for this check.	Does the fuel pump emit operating sound?	Check the fuel pressure. <Ref. to ME(H6DO)-31, INSPECTION, Fuel Pressure.>	Go to step **2**.

GETmeMANUALS.org

	Step	Check	Yes	No
2	**CHECK POWER SUPPLY TO EACH FUEL INJECTOR.** 1) Turn the ignition switch to OFF. 2) Disconnect the connector from fuel injector. 3) Turn the ignition switch to ON. 4) Measure the voltage between fuel injector connector and the engine ground. ***Connector & terminal*** ***#1 (E5) No. 2 (+) — Engine ground (–):*** ***#2 (E16) No. 2 (+) — Engine ground (–):*** ***#3 (E6) No. 2 (+) — Engine ground (–):*** ***#4 (E17) No. 2 (+) — Engine ground (–):*** ***#5 (E43) No. 2 (+) — Engine ground (–):*** ***#6 (E44) No. 2 (+) — Engine ground (–):***	Is the voltage 10 V or more?	Go to step **3**.	Repair the harness and connector. NOTE: In this case, repair the following item: • Open circuit in harness between main relay and fuel injector connector • Poor contact of main relay connector • Poor contact of coupling connector
3	**CHECK HARNESS BETWEEN ECM AND FUEL INJECTOR CONNECTOR.** 1) Turn the ignition switch to OFF. 2) Disconnect the connectors from ECM. 3) Measure the resistance of harness between ECM and fuel injector connector. ***Connector & terminal*** ***#1 (B134) No. 10 — (E5) No. 1:*** ***#2 (B134) No. 11 — (E16) No. 1:*** ***#3 (B134) No. 12 — (E6) No. 1:*** ***#4 (B134) No. 13 — (E17) No. 1:*** ***#5 (B134) No. 23 — (E43) No. 1:*** ***#6 (B134) No. 24 — (E44) No. 1:***	Is the resistance less than 1 Ω?	Go to step **4**.	Repair the harness and connector. NOTE: In this case, repair the following item: • Open circuit in harness between ECM and fuel injector connector • Poor contact of coupling connector
4	**CHECK HARNESS BETWEEN ECM AND FUEL INJECTOR CONNECTOR.** Measure the resistance between ECM and chassis ground. ***Connector & terminal*** ***#1 (B134) No. 10 — Chassis ground:*** ***#2 (B134) No. 11 — Chassis ground:*** ***#3 (B134) No. 12 — Chassis ground:*** ***#4 (B134) No. 13 — Chassis ground:*** ***#5 (B134) No. 23 — Chassis ground:*** ***#6 (B134) No. 24 — Chassis ground:***	Is the resistance 1 MΩ or more?	Go to step **5**.	Repair the short circuit to ground in harness between ECM and fuel injector connector.
5	**CHECK EACH FUEL INJECTOR.** Measure the resistance between each fuel injector terminals. ***Terminals*** ***No. 1 — No. 2:***	Is the resistance 5 — 20 Ω?	Go to step **6**.	Replace the faulty fuel injector. <Ref. to FU(H6DO)-44, Fuel Injector.>
6	**CHECK FOR POOR CONTACT.** Check for poor contact of ECM connector.	Is there poor contact of ECM connector?	Repair the poor contact of ECM connector.	Inspection using "General Diagnostic Table". <Ref. to EN(H6DO)(diag)-381, INSPECTION, General Diagnostic Table.>

GETmeMANUALS.org

17. Diagnostic Procedure for Subaru Select Monitor Communication

A: COMMUNICATION FOR INITIALIZING IMPOSSIBLE

DIAGNOSIS:
Open or short circuit in data link connector
TROUBLE SYMPTOM:
Subaru Select Monitor communication failure
WIRING DIAGRAM:

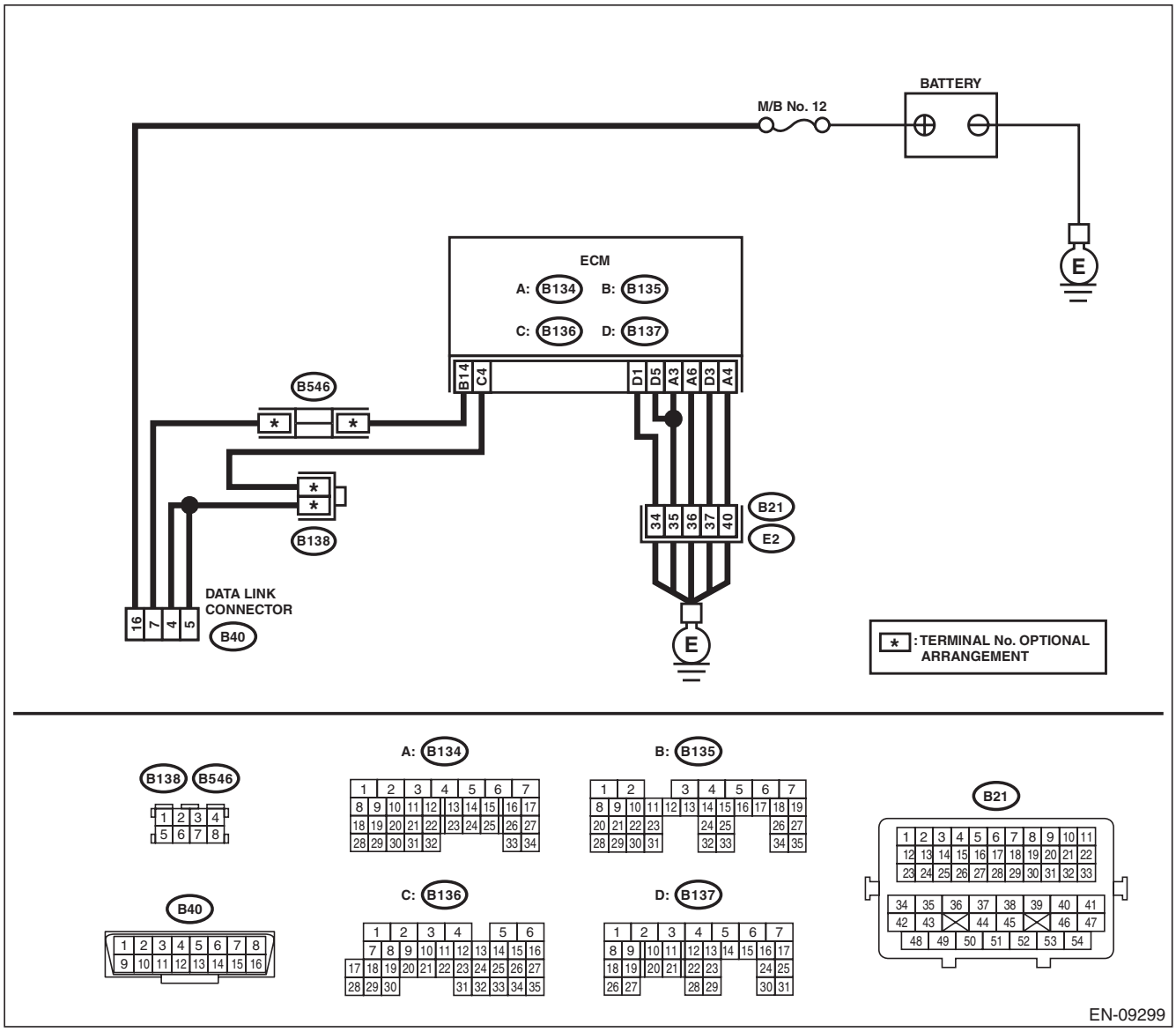

Step		Check	Yes	No
1	**CHECK POWER SUPPLY CIRCUIT.** Connect the SDI (Subaru Diagnosis Interface) or general scan tool to data link connector.	Does SDI or general scan tool turn ON?	Go to step **4**.	Go to step **2**.

GETmeMANUALS.org

	Step	Check	Yes	No
2	**CHECK POWER SUPPLY CIRCUIT.** Measure the voltage between data link connector and chassis ground. ***Connector & terminal*** ***(B40) No. 16 (+) — Chassis ground (–):***	Is the voltage 10 V or more?	Go to step **3**.	Repair the power supply circuit. NOTE: In this case, repair the following item: • Open or ground short circuit of harness between battery and data link connector • Blown out of fuse (M/B No. 12)
3	**CHECK HARNESS BETWEEN DATA LINK CONNECTOR AND CHASSIS GROUND.** 1) Turn the ignition switch to OFF. 2) Measure the resistance of harness between data link connector and chassis ground. ***Connector & terminal*** ***(B40) No. 4 — Chassis ground:*** ***(B40) No. 5 — Chassis ground:***	Is the resistance less than 5 Ω?	Repair the poor contact of data link connector.	Repair the harness and connector. NOTE: In this case, repair the following item: • Open circuit of harness between ECM and data link connector • Open circuit of harness between ECM and engine ground • Poor contact of ECM connector • Poor contact of coupling connector
4	**CHECK HARNESS BETWEEN ECM AND DATA LINK CONNECTOR.** 1) Turn the ignition switch to OFF. 2) Disconnect the connector from ECM, TCM, VDC CM, airbag CM and body integrated unit. **CAUTION:** **When disconnecting the connector from airbag CM, always follow the precautions on AB section. <Ref. to AB-9, CAUTION, General Description.>** 3) Measure the resistance of harness between ECM and data link connector. ***Connector & terminal*** ***(B135) No. 14 — (B40) No. 7:***	Is the resistance less than 1 Ω?	Go to step **5**.	Repair the harness and connector. NOTE: In this case, repair the following item: • Open circuit of harness between ECM and data link connector • Poor contact of coupling connector
5	**CHECK HARNESS BETWEEN ECM AND DATA LINK CONNECTOR.** Measure the resistance between data link connector and chassis ground. ***Connector & terminal*** ***(B40) No. 7 — Chassis ground:***	Is the resistance 1 MΩ or more?	Repair the poor contact of the ECM or data link connector.	Repair the ground short circuit of harness between ECM and data link connector.

GETmeMANUALS.org

18. List of Diagnostic Trouble Code (DTC)

A: LIST

DTC	Item	Note
P0011	Intake Camshaft Position - Timing Over-Advanced or System Performance (Bank 1)	<Ref. to EN(H6DO)(diag)-95, DTC P0011 INTAKE CAMSHAFT POSITION - TIMING OVER-ADVANCED OR SYSTEM PERFORMANCE (BANK 1), Diagnostic Procedure with Diagnostic Trouble Code (DTC).>
P0014	Exhaust AVCS System 1 (Range/ Performance)	<Ref. to EN(H6DO)(diag)-96, DTC P0014 EXHAUST AVCS SYSTEM 1 (RANGE/PERFORMANCE), Diagnostic Procedure with Diagnostic Trouble Code (DTC).>
P0016	Crankshaft Position - Camshaft Position Correlation (Bank1)	<Ref. to EN(H6DO)(diag)-97, DTC P0016 CRANKSHAFT POSITION - CAMSHAFT POSITION CORRELATION (BANK1), Diagnostic Procedure with Diagnostic Trouble Code (DTC).>
P0017	Crank and Cam Timing B System Failure (Bank 1)	<Ref. to EN(H6DO)(diag)-98, DTC P0017 CRANK AND CAM TIMING B SYSTEM FAILURE (BANK 1), Diagnostic Procedure with Diagnostic Trouble Code (DTC).>
P0018	Crankshaft Position - Camshaft Position Correlation (Bank2)	<Ref. to EN(H6DO)(diag)-99, DTC P0018 CRANKSHAFT POSITION - CAMSHAFT POSITION CORRELATION (BANK2), Diagnostic Procedure with Diagnostic Trouble Code (DTC).>
P0019	Crank and Cam Timing B System Failure (Bank 2)	<Ref. to EN(H6DO)(diag)-100, DTC P0019 CRANK AND CAM TIMING B SYSTEM FAILURE (BANK 2), Diagnostic Procedure with Diagnostic Trouble Code (DTC).>
P0021	Intake Camshaft Position - Timing Over-Advanced or System Performance (Bank 2)	<Ref. to EN(H6DO)(diag)-101, DTC P0021 INTAKE CAMSHAFT POSITION - TIMING OVER-ADVANCED OR SYSTEM PERFORMANCE (BANK 2), Diagnostic Procedure with Diagnostic Trouble Code (DTC).>
P0024	Exhaust AVCS System 2 (Range/ Performance)	<Ref. to EN(H6DO)(diag)-102, DTC P0024 EXHAUST AVCS SYSTEM 2 (RANGE/PERFORMANCE), Diagnostic Procedure with Diagnostic Trouble Code (DTC).>
P0030	HO2S Heater Control Circuit (Bank 1 Sensor 1)	<Ref. to EN(H6DO)(diag)-103, DTC P0030 HO2S HEATER CONTROL CIRCUIT (BANK 1 SENSOR 1), Diagnostic Procedure with Diagnostic Trouble Code (DTC).>
P0031	HO2S Heater Control Circuit Low (Bank 1 Sensor 1)	<Ref. to EN(H6DO)(diag)-105, DTC P0031 HO2S HEATER CONTROL CIRCUIT LOW (BANK 1 SENSOR 1), Diagnostic Procedure with Diagnostic Trouble Code (DTC).>
P0032	HO2S Heater Control Circuit High (Bank 1 Sensor 1)	<Ref. to EN(H6DO)(diag)-107, DTC P0032 HO2S HEATER CONTROL CIRCUIT HIGH (BANK 1 SENSOR 1), Diagnostic Procedure with Diagnostic Trouble Code (DTC).>
P0037	HO2S Heater Control Circuit Low (Bank 1 Sensor 2)	<Ref. to EN(H6DO)(diag)-109, DTC P0037 HO2S HEATER CONTROL CIRCUIT LOW (BANK 1 SENSOR 2), Diagnostic Procedure with Diagnostic Trouble Code (DTC).>
P0038	HO2S Heater Control Circuit High (Bank 1 Sensor 2)	<Ref. to EN(H6DO)(diag)-111, DTC P0038 HO2S HEATER CONTROL CIRCUIT HIGH (BANK 1 SENSOR 2), Diagnostic Procedure with Diagnostic Trouble Code (DTC).>
P0050	HO2S Heater Control Circuit (Bank 2 Sensor 1)	<Ref. to EN(H6DO)(diag)-113, DTC P0050 HO2S HEATER CONTROL CIRCUIT (BANK 2 SENSOR 1), Diagnostic Procedure with Diagnostic Trouble Code (DTC).>
P0051	HO2S Heater Control Circuit Low (Bank 2 Sensor 1)	<Ref. to EN(H6DO)(diag)-115, DTC P0051 HO2S HEATER CONTROL CIRCUIT LOW (BANK 2 SENSOR 1), Diagnostic Procedure with Diagnostic Trouble Code (DTC).>
P0052	HO2S Heater Control Circuit High (Bank 2 Sensor 1)	<Ref. to EN(H6DO)(diag)-117, DTC P0052 HO2S HEATER CONTROL CIRCUIT HIGH (BANK 2 SENSOR 1), Diagnostic Procedure with Diagnostic Trouble Code (DTC).>
P0057	HO2S Heater Control Circuit Low (Bank 2 Sensor 2)	<Ref. to EN(H6DO)(diag)-119, DTC P0057 HO2S HEATER CONTROL CIRCUIT LOW (BANK 2 SENSOR 2), Diagnostic Procedure with Diagnostic Trouble Code (DTC).>

GETmeMANUALS.org

List of Diagnostic Trouble Code (DTC)

DTC	Item	Note
P0058	HO2S Heater Control Circuit High (Bank 2 Sensor 2)	<Ref. to EN(H6DO)(diag)-121, DTC P0058 HO2S HEATER CONTROL CIRCUIT HIGH (BANK 2 SENSOR 2), Diagnostic Procedure with Diagnostic Trouble Code (DTC).>
P0068	MAP/MAF - Throttle Position Correlation	<Ref. to EN(H6DO)(diag)-123, DTC P0068 MAP/MAF - THROTTLE POSITION CORRELATION, Diagnostic Procedure with Diagnostic Trouble Code (DTC).>
P0101	Mass or Volume Air Flow Circuit Range/Performance	<Ref. to EN(H6DO)(diag)-124, DTC P0101 MASS OR VOLUME AIR FLOW CIRCUIT RANGE/PERFORMANCE, Diagnostic Procedure with Diagnostic Trouble Code (DTC).>
P0102	Mass or Volume Air Flow Circuit Low Input	<Ref. to EN(H6DO)(diag)-125, DTC P0102 MASS OR VOLUME AIR FLOW CIRCUIT LOW INPUT, Diagnostic Procedure with Diagnostic Trouble Code (DTC).>
P0103	Mass or Volume Air Flow Circuit High Input	<Ref. to EN(H6DO)(diag)-127, DTC P0103 MASS OR VOLUME AIR FLOW CIRCUIT HIGH INPUT, Diagnostic Procedure with Diagnostic Trouble Code (DTC).>
P0107	Manifold Absolute Pressure/Barometric Pressure Circuit Low Input	<Ref. to EN(H6DO)(diag)-129, DTC P0107 MANIFOLD ABSOLUTE PRESSURE/BAROMETRIC PRESSURE CIRCUIT LOW INPUT, Diagnostic Procedure with Diagnostic Trouble Code (DTC).>
P0108	Manifold Absolute Pressure/Barometric Pressure Circuit High Input	<Ref. to EN(H6DO)(diag)-131, DTC P0108 MANIFOLD ABSOLUTE PRESSURE/BAROMETRIC PRESSURE CIRCUIT HIGH INPUT, Diagnostic Procedure with Diagnostic Trouble Code (DTC).>
P0111	Intake Air Temperature Sensor 1 Circuit Range/Performance	<Ref. to EN(H6DO)(diag)-133, DTC P0111 INTAKE AIR TEMPERATURE SENSOR 1 CIRCUIT RANGE/PERFORMANCE, Diagnostic Procedure with Diagnostic Trouble Code (DTC).>
P0112	Intake Air Temperature Sensor 1 Circuit Low	<Ref. to EN(H6DO)(diag)-134, DTC P0112 INTAKE AIR TEMPERATURE SENSOR 1 CIRCUIT LOW, Diagnostic Procedure with Diagnostic Trouble Code (DTC).>
P0113	Intake Air Temperature Sensor 1 Circuit High	<Ref. to EN(H6DO)(diag)-136, DTC P0113 INTAKE AIR TEMPERATURE SENSOR 1 CIRCUIT HIGH, Diagnostic Procedure with Diagnostic Trouble Code (DTC).>
P0117	Engine Coolant Temperature Circuit Low	<Ref. to EN(H6DO)(diag)-138, DTC P0117 ENGINE COOLANT TEMPERATURE CIRCUIT LOW, Diagnostic Procedure with Diagnostic Trouble Code (DTC).>
P0118	Engine Coolant Temperature Circuit High	<Ref. to EN(H6DO)(diag)-140, DTC P0118 ENGINE COOLANT TEMPERATURE CIRCUIT HIGH, Diagnostic Procedure with Diagnostic Trouble Code (DTC).>
P0122	Throttle/Pedal Position Sensor/ Switch “A” Circuit Low	<Ref. to EN(H6DO)(diag)-142, DTC P0122 THROTTLE/PEDAL POSITION SENSOR/SWITCH “A” CIRCUIT LOW, Diagnostic Procedure with Diagnostic Trouble Code (DTC).>
P0123	Throttle/Pedal Position Sensor/ Switch “A” Circuit High	<Ref. to EN(H6DO)(diag)-144, DTC P0123 THROTTLE/PEDAL POSITION SENSOR/SWITCH “A” CIRCUIT HIGH, Diagnostic Procedure with Diagnostic Trouble Code (DTC).>
P0125	Insufficient Coolant Temperature for Closed Loop Fuel Control	<Ref. to EN(H6DO)(diag)-146, DTC P0125 INSUFFICIENT COOLANT TEMPERATURE FOR CLOSED LOOP FUEL CONTROL, Diagnostic Procedure with Diagnostic Trouble Code (DTC).>
P0126	Insufficient Engine Coolant Temperature for Stable Operation	<Ref. to EN(H6DO)(diag)-147, DTC P0126 INSUFFICIENT ENGINE COOLANT TEMPERATURE FOR STABLE OPERATION, Diagnostic Procedure with Diagnostic Trouble Code (DTC).>
P0128	Coolant Thermostat (Engine Coolant Temperature Below Thermostat Regulating Temperature)	<Ref. to EN(H6DO)(diag)-148, DTC P0128 COOLANT THERMOSTAT (ENGINE COOLANT TEMPERATURE BELOW THERMOSTAT REGULATING TEMPERATURE), Diagnostic Procedure with Diagnostic Trouble Code (DTC).>
P0131	O2 Sensor Circuit Low Voltage (Bank 1 Sensor 1)	<Ref. to EN(H6DO)(diag)-149, DTC P0131 O2 SENSOR CIRCUIT LOW VOLTAGE (BANK 1 SENSOR 1), Diagnostic Procedure with Diagnostic Trouble Code (DTC).>

GETmeMANUALS.org

DTC	Item	Note
P0132	O2 Sensor Circuit High Voltage (Bank 1 Sensor 1)	<Ref. to EN(H6DO)(diag)-151, DTC P0132 O2 SENSOR CIRCUIT HIGH VOLTAGE (BANK 1 SENSOR 1), Diagnostic Procedure with Diagnostic Trouble Code (DTC).>
P0134	O2 Sensor Circuit No Activity Detected (Bank 1 Sensor 1)	<Ref. to EN(H6DO)(diag)-153, DTC P0134 O2 SENSOR CIRCUIT NO ACTIVITY DETECTED (BANK 1 SENSOR 1), Diagnostic Procedure with Diagnostic Trouble Code (DTC).>
P0137	O2 Sensor Circuit Low Voltage (Bank 1 Sensor 2)	<Ref. to EN(H6DO)(diag)-155, DTC P0137 O2 SENSOR CIRCUIT LOW VOLTAGE (BANK 1 SENSOR 2), Diagnostic Procedure with Diagnostic Trouble Code (DTC).>
P0138	O2 Sensor Circuit High Voltage (Bank 1 Sensor 2)	<Ref. to EN(H6DO)(diag)-157, DTC P0138 O2 SENSOR CIRCUIT HIGH VOLTAGE (BANK 1 SENSOR 2), Diagnostic Procedure with Diagnostic Trouble Code (DTC).>
P013A	O2 Sensor Slow Response - Rich to Lean (Bank 1 Sensor 2)	<Ref. to EN(H6DO)(diag)-159, DTC P013A O2 SENSOR SLOW RESPONSE - RICH TO LEAN (BANK 1 SENSOR 2), Diagnostic Procedure with Diagnostic Trouble Code (DTC).>
P013B	O2 Sensor Slow Response - Lean to Rich (Bank 1 Sensor 2)	<Ref. to EN(H6DO)(diag)-160, DTC P013B O2 SENSOR SLOW RESPONSE - LEAN TO RICH (BANK 1 SENSOR 2), Diagnostic Procedure with Diagnostic Trouble Code (DTC).>
P013C	O2 Sensor Slow Response - Rich to Lean (Bank 2 Sensor 2)	<Ref. to EN(H6DO)(diag)-161, DTC P013C O2 SENSOR SLOW RESPONSE - RICH TO LEAN (BANK 2 SENSOR 2), Diagnostic Procedure with Diagnostic Trouble Code (DTC).>
P013D	O2 Sensor Slow Response - Lean to Rich (Bank 2 Sensor 2)	<Ref. to EN(H6DO)(diag)-162, DTC P013D O2 SENSOR SLOW RESPONSE - LEAN TO RICH (BANK 2 SENSOR 2), Diagnostic Procedure with Diagnostic Trouble Code (DTC).>
P013E	O2 Sensor Delayed Response - Rich to Lean (Bank 1 Sensor 2)	<Ref. to EN(H6DO)(diag)-162, DTC P013E O2 SENSOR DELAYED RESPONSE - RICH TO LEAN (BANK 1 SENSOR 2), Diagnostic Procedure with Diagnostic Trouble Code (DTC).>
P013F	O2 Sensor Delayed Response - Lean to Rich (Bank 1 Sensor 2)	<Ref. to EN(H6DO)(diag)-162, DTC P013F O2 SENSOR DELAYED RESPONSE - LEAN TO RICH (BANK 1 SENSOR 2), Diagnostic Procedure with Diagnostic Trouble Code (DTC).>
P0140	O2 Sensor Circuit No Activity Detected (Bank1 Sensor2)	<Ref. to EN(H6DO)(diag)-163, DTC P0140 O2 SENSOR CIRCUIT NO ACTIVITY DETECTED (BANK1 SENSOR2), Diagnostic Procedure with Diagnostic Trouble Code (DTC).>
P0141	O2 Sensor Heater Circuit (Bank1 Sensor2)	<Ref. to EN(H6DO)(diag)-165, DTC P0141 O2 SENSOR HEATER CIRCUIT (BANK1 SENSOR2), Diagnostic Procedure with Diagnostic Trouble Code (DTC).>
P014A	O2 Sensor Delayed Response - Rich to Lean (Bank 2 Sensor 2)	<Ref. to EN(H6DO)(diag)-165, DTC P014A O2 SENSOR DELAYED RESPONSE - RICH TO LEAN (BANK 2 SENSOR 2), Diagnostic Procedure with Diagnostic Trouble Code (DTC).>
P014B	O2 Sensor Delayed Response - Lean to Rich (Bank 2 Sensor 2)	<Ref. to EN(H6DO)(diag)-165, DTC P014B O2 SENSOR DELAYED RESPONSE - LEAN TO RICH (BANK 2 SENSOR 2), Diagnostic Procedure with Diagnostic Trouble Code (DTC).>
P014C	O2 Sensor Slow Response - Rich to Lean (Bank 1 Sensor 1)	<Ref. to EN(H6DO)(diag)-166, DTC P014C O2 SENSOR SLOW RESPONSE - RICH TO LEAN (BANK 1 SENSOR 1), Diagnostic Procedure with Diagnostic Trouble Code (DTC).>
P014D	O2 Sensor Slow Response - Lean to Rich (Bank 1 Sensor 1)	<Ref. to EN(H6DO)(diag)-166, DTC P014D O2 SENSOR SLOW RESPONSE - LEAN TO RICH (BANK 1 SENSOR 1), Diagnostic Procedure with Diagnostic Trouble Code (DTC).>
P014E	O2 Sensor Slow Response - Rich to Lean (Bank 2 Sensor 1)	<Ref. to EN(H6DO)(diag)-167, DTC P014E O2 SENSOR SLOW RESPONSE - RICH TO LEAN (BANK 2 SENSOR 1), Diagnostic Procedure with Diagnostic Trouble Code (DTC).>
P014F	O2 Sensor Slow Response - Lean to Rich (Bank 2 Sensor 1)	<Ref. to EN(H6DO)(diag)-167, DTC P014F O2 SENSOR SLOW RESPONSE - LEAN TO RICH (BANK 2 SENSOR 1), Diagnostic Procedure with Diagnostic Trouble Code (DTC).>
P0151	O2 Sensor Circuit Low Voltage (Bank 2 Sensor 1)	<Ref. to EN(H6DO)(diag)-168, DTC P0151 O2 SENSOR CIRCUIT LOW VOLTAGE (BANK 2 SENSOR 1), Diagnostic Procedure with Diagnostic Trouble Code (DTC).>

GETmeMANUALS.org

List of Diagnostic Trouble Code (DTC)

DTC	Item	Note
P0152	O2 Sensor Circuit High Voltage (Bank 2 Sensor 1)	<Ref. to EN(H6DO)(diag)-170, DTC P0152 O2 SENSOR CIRCUIT HIGH VOLTAGE (BANK 2 SENSOR 1), Diagnostic Procedure with Diagnostic Trouble Code (DTC).>
P0154	O2 Sensor Circuit No Activity Detected (Bank 2 Sensor 1)	<Ref. to EN(H6DO)(diag)-172, DTC P0154 O2 SENSOR CIRCUIT NO ACTIVITY DETECTED (BANK 2 SENSOR 1), Diagnostic Procedure with Diagnostic Trouble Code (DTC).>
P0157	O2 Sensor Circuit Low Voltage (Bank 2 Sensor 2)	<Ref. to EN(H6DO)(diag)-174, DTC P0157 O2 SENSOR CIRCUIT LOW VOLTAGE (BANK 2 SENSOR 2), Diagnostic Procedure with Diagnostic Trouble Code (DTC).>
P0158	O2 Sensor Circuit High Voltage (Bank 2 Sensor 2)	<Ref. to EN(H6DO)(diag)-176, DTC P0158 O2 SENSOR CIRCUIT HIGH VOLTAGE (BANK 2 SENSOR 2), Diagnostic Procedure with Diagnostic Trouble Code (DTC).>
P015A	O2 Sensor Delayed Response - Rich to Lean (Bank 1 Sensor 1)	<Ref. to EN(H6DO)(diag)-178, DTC P015A O2 SENSOR DELAYED RESPONSE - RICH TO LEAN (BANK 1 SENSOR 1), Diagnostic Procedure with Diagnostic Trouble Code (DTC).>
P015B	O2 Sensor Delayed Response - Lean to Rich (Bank 1 Sensor 1)	<Ref. to EN(H6DO)(diag)-178, DTC P015B O2 SENSOR DELAYED RESPONSE - LEAN TO RICH (BANK 1 SENSOR 1), Diagnostic Procedure with Diagnostic Trouble Code (DTC).>
P015C	O2 Sensor Delayed Response - Rich to Lean (Bank 2 Sensor 1)	<Ref. to EN(H6DO)(diag)-178, DTC P015C O2 SENSOR DELAYED RESPONSE - RICH TO LEAN (BANK 2 SENSOR 1), Diagnostic Procedure with Diagnostic Trouble Code (DTC).>
P015D	O2 Sensor Delayed Response - Lean to Rich (Bank 2 Sensor 1)	<Ref. to EN(H6DO)(diag)-178, DTC P015D O2 SENSOR DELAYED RESPONSE - LEAN TO RICH (BANK 2 SENSOR 1), Diagnostic Procedure with Diagnostic Trouble Code (DTC).>
P0160	O2 Sensor Circuit No Activity Detected (Bank2 Sensor2)	<Ref. to EN(H6DO)(diag)-179, DTC P0160 O2 SENSOR CIRCUIT NO ACTIVITY DETECTED (BANK2 SENSOR2), Diagnostic Procedure with Diagnostic Trouble Code (DTC).>
P0161	O2 Sensor Heater Circuit (Bank2 Sensor2)	<Ref. to EN(H6DO)(diag)-181, DTC P0161 O2 SENSOR HEATER CIRCUIT (BANK2 SENSOR2), Diagnostic Procedure with Diagnostic Trouble Code (DTC).>
P0171	System Too Lean (Bank 1)	<Ref. to EN(H6DO)(diag)-181, DTC P0171 SYSTEM TOO LEAN (BANK 1), Diagnostic Procedure with Diagnostic Trouble Code (DTC).>
P0172	System Too Rich (Bank 1)	<Ref. to EN(H6DO)(diag)-181, DTC P0172 SYSTEM TOO RICH (BANK 1), Diagnostic Procedure with Diagnostic Trouble Code (DTC).>
P0174	System Too Lean (Bank 2)	<Ref. to EN(H6DO)(diag)-181, DTC P0174 SYSTEM TOO LEAN (BANK 2), Diagnostic Procedure with Diagnostic Trouble Code (DTC).>
P0175	System Too Rich (Bank 2)	<Ref. to EN(H6DO)(diag)-182, DTC P0175 SYSTEM TOO RICH (BANK 2), Diagnostic Procedure with Diagnostic Trouble Code (DTC).>
P0181	Fuel Temperature Sensor “A” Circuit Range/Performance	<Ref. to EN(H6DO)(diag)-184, DTC P0181 FUEL TEMPERATURE SENSOR “A” CIRCUIT RANGE/PERFORMANCE, Diagnostic Procedure with Diagnostic Trouble Code (DTC).>
P0182	Fuel Temperature Sensor “A” Circuit Low Input	<Ref. to EN(H6DO)(diag)-185, DTC P0182 FUEL TEMPERATURE SENSOR “A” CIRCUIT LOW INPUT, Diagnostic Procedure with Diagnostic Trouble Code (DTC).>
P0183	Fuel Temperature Sensor “A” Circuit High Input	<Ref. to EN(H6DO)(diag)-187, DTC P0183 FUEL TEMPERATURE SENSOR “A” CIRCUIT HIGH INPUT, Diagnostic Procedure with Diagnostic Trouble Code (DTC).>
P0196	Engine Oil Temperature Sensor Circuit Range/Performance	<Ref. to EN(H6DO)(diag)-189, DTC P0196 ENGINE OIL TEMPERATURE SENSOR CIRCUIT RANGE/PERFORMANCE, Diagnostic Procedure with Diagnostic Trouble Code (DTC).>
P0197	Engine Oil Temperature Sensor Low	<Ref. to EN(H6DO)(diag)-190, DTC P0197 ENGINE OIL TEMPERATURE SENSOR LOW, Diagnostic Procedure with Diagnostic Trouble Code (DTC).>
P0198	Engine Oil Temperature Sensor High	<Ref. to EN(H6DO)(diag)-192, DTC P0198 ENGINE OIL TEMPERATURE SENSOR HIGH, Diagnostic Procedure with Diagnostic Trouble Code (DTC).>

GETmeMANUALS.org

List of Diagnostic Trouble Code (DTC)

DTC	Item	Note
P0201	Injector #1	<Ref. to EN(H6DO)(diag)-194, DTC P0201 INJECTOR #1, Diagnostic Procedure with Diagnostic Trouble Code (DTC).>
P0202	Injector #2	<Ref. to EN(H6DO)(diag)-196, DTC P0202 INJECTOR #2, Diagnostic Procedure with Diagnostic Trouble Code (DTC).>
P0203	Injector #3	<Ref. to EN(H6DO)(diag)-196, DTC P0203 INJECTOR #3, Diagnostic Procedure with Diagnostic Trouble Code (DTC).>
P0204	Injector #4	<Ref. to EN(H6DO)(diag)-196, DTC P0204 INJECTOR #4, Diagnostic Procedure with Diagnostic Trouble Code (DTC).>
P0205	Injector #5	<Ref. to EN(H6DO)(diag)-196, DTC P0205 INJECTOR #5, Diagnostic Procedure with Diagnostic Trouble Code (DTC).>
P0206	Injector #6	<Ref. to EN(H6DO)(diag)-196, DTC P0206 INJECTOR #6, Diagnostic Procedure with Diagnostic Trouble Code (DTC).>
P0222	Throttle/Pedal Position Sensor/ Switch “B” Circuit Low	<Ref. to EN(H6DO)(diag)-197, DTC P0222 THROTTLE/PEDAL POSITION SENSOR/SWITCH “B” CIRCUIT LOW, Diagnostic Procedure with Diagnostic Trouble Code (DTC).>
P0223	Throttle/Pedal Position Sensor/ Switch “B” Circuit High	<Ref. to EN(H6DO)(diag)-199, DTC P0223 THROTTLE/PEDAL POSITION SENSOR/SWITCH “B” CIRCUIT HIGH, Diagnostic Procedure with Diagnostic Trouble Code (DTC).>
P0230	Fuel Pump Primary Circuit	<Ref. to EN(H6DO)(diag)-201, DTC P0230 FUEL PUMP PRIMARY CIRCUIT, Diagnostic Procedure with Diagnostic Trouble Code (DTC).>
P0301	Cylinder 1 Misfire Detected	<Ref. to EN(H6DO)(diag)-204, DTC P0301 CYLINDER 1 MISFIRE DETECTED, Diagnostic Procedure with Diagnostic Trouble Code (DTC).>
P0302	Cylinder 2 Misfire Detected	<Ref. to EN(H6DO)(diag)-204, DTC P0302 CYLINDER 2 MISFIRE DETECTED, Diagnostic Procedure with Diagnostic Trouble Code (DTC).>
P0303	Cylinder 3 Misfire Detected	<Ref. to EN(H6DO)(diag)-204, DTC P0303 CYLINDER 3 MISFIRE DETECTED, Diagnostic Procedure with Diagnostic Trouble Code (DTC).>
P0304	Cylinder 4 Misfire Detected	<Ref. to EN(H6DO)(diag)-204, DTC P0304 CYLINDER 4 MISFIRE DETECTED, Diagnostic Procedure with Diagnostic Trouble Code (DTC).>
P0305	Cylinder 5 Misfire Detected	<Ref. to EN(H6DO)(diag)-204, DTC P0305 CYLINDER 5 MISFIRE DETECTED, Diagnostic Procedure with Diagnostic Trouble Code (DTC).>
P0306	Cylinder 6 Misfire Detected	<Ref. to EN(H6DO)(diag)-205, DTC P0306 CYLINDER 6 MISFIRE DETECTED, Diagnostic Procedure with Diagnostic Trouble Code (DTC).>
P0327	Knock Sensor 1 Circuit Low (Bank 1 or Single Sensor)	<Ref. to EN(H6DO)(diag)-210, DTC P0327 KNOCK SENSOR 1 CIRCUIT LOW (BANK 1 OR SINGLE SENSOR), Diagnostic Procedure with Diagnostic Trouble Code (DTC).>
P0328	Knock Sensor 1 Circuit High (Bank 1 or Single Sensor)	<Ref. to EN(H6DO)(diag)-212, DTC P0328 KNOCK SENSOR 1 CIRCUIT HIGH (BANK 1 OR SINGLE SENSOR), Diagnostic Procedure with Diagnostic Trouble Code (DTC).>
P0332	Knock Sensor 2 Circuit Low (Bank 2)	<Ref. to EN(H6DO)(diag)-214, DTC P0332 KNOCK SENSOR 2 CIRCUIT LOW (BANK 2), Diagnostic Procedure with Diagnostic Trouble Code (DTC).>
P0333	Knock Sensor 2 Circuit High (Bank 2)	<Ref. to EN(H6DO)(diag)-216, DTC P0333 KNOCK SENSOR 2 CIRCUIT HIGH (BANK 2), Diagnostic Procedure with Diagnostic Trouble Code (DTC).>
P0335	Crankshaft Position Sensor “A” Circuit	<Ref. to EN(H6DO)(diag)-218, DTC P0335 CRANKSHAFT POSITION SENSOR “A” CIRCUIT, Diagnostic Procedure with Diagnostic Trouble Code (DTC).>
P0336	Crankshaft Position Sensor “A” Circuit Range/Performance	<Ref. to EN(H6DO)(diag)-220, DTC P0336 CRANKSHAFT POSITION SENSOR “A” CIRCUIT RANGE/PERFORMANCE, Diagnostic Procedure with Diagnostic Trouble Code (DTC).>
P0340	Camshaft Position Sensor “A” Circuit (Bank 1 or Single Sensor)	<Ref. to EN(H6DO)(diag)-221, DTC P0340 CAMSHAFT POSITION SENSOR “A” CIRCUIT (BANK 1 OR SINGLE SENSOR), Diagnostic Procedure with Diagnostic Trouble Code (DTC).>
P0345	Camshaft Position Sensor “A” Circuit (Bank 2)	<Ref. to EN(H6DO)(diag)-223, DTC P0345 CAMSHAFT POSITION SENSOR “A” CIRCUIT (BANK 2), Diagnostic Procedure with Diagnostic Trouble Code (DTC).>

GETmeMANUALS.org

List of Diagnostic Trouble Code (DTC)

DTC	Item	Note
P0351	Ignition Coil A Primary/Secondary Circuit	<Ref. to EN(H6DO)(diag)-225, DTC P0351 IGNITION COIL A PRIMARY/ SECONDARY CIRCUIT, Diagnostic Procedure with Diagnostic Trouble Code (DTC).>
P0352	Ignition Coil B Primary/Secondary Circuit	<Ref. to EN(H6DO)(diag)-227, DTC P0352 IGNITION COIL B PRIMARY/ SECONDARY CIRCUIT, Diagnostic Procedure with Diagnostic Trouble Code (DTC).>
P0353	Ignition Coil C Primary/Secondary Circuit	<Ref. to EN(H6DO)(diag)-227, DTC P0353 IGNITION COIL C PRIMARY/ SECONDARY CIRCUIT, Diagnostic Procedure with Diagnostic Trouble Code (DTC).>
P0354	Ignition Coil D Primary/Secondary Circuit	<Ref. to EN(H6DO)(diag)-227, DTC P0354 IGNITION COIL D PRIMARY/ SECONDARY CIRCUIT, Diagnostic Procedure with Diagnostic Trouble Code (DTC).>
P0355	Ignition Coil E Primary/Secondary Circuit	<Ref. to EN(H6DO)(diag)-227, DTC P0355 IGNITION COIL E PRIMARY/ SECONDARY CIRCUIT, Diagnostic Procedure with Diagnostic Trouble Code (DTC).>
P0356	Ignition Coil F Primary/Secondary Circuit	<Ref. to EN(H6DO)(diag)-227, DTC P0356 IGNITION COIL F PRIMARY/ SECONDARY CIRCUIT, Diagnostic Procedure with Diagnostic Trouble Code (DTC).>
P0365	Camshaft Position Sensor “B” Circuit (Bank 1)	<Ref. to EN(H6DO)(diag)-228, DTC P0365 CAMSHAFT POSITION SENSOR “B” CIRCUIT (BANK 1), Diagnostic Procedure with Diagnostic Trouble Code (DTC).>
P0390	Camshaft Position Sensor “B” Circuit (Bank 2)	<Ref. to EN(H6DO)(diag)-230, DTC P0390 CAMSHAFT POSITION SENSOR “B” CIRCUIT (BANK 2), Diagnostic Procedure with Diagnostic Trouble Code (DTC).>
P0400	Exhaust Gas Recirculation Flow	<Ref. to EN(H6DO)(diag)-232, DTC P0400 EXHAUST GAS RECIRCULATION FLOW, Diagnostic Procedure with Diagnostic Trouble Code (DTC).>
P0420	Catalyst System Efficiency Below Threshold (Bank 1)	<Ref. to EN(H6DO)(diag)-233, DTC P0420 CATALYST SYSTEM EFFICIENCY BELOW THRESHOLD (BANK 1), Diagnostic Procedure with Diagnostic Trouble Code (DTC).>
P0442	Evaporative Emission Control System Leak Detected (Small Leak)	<Ref. to EN(H6DO)(diag)-237, DTC P0442 EVAPORATIVE EMISSION CONTROL SYSTEM LEAK DETECTED (SMALL LEAK), Diagnostic Procedure with Diagnostic Trouble Code (DTC).>
P0447	Evaporative Emission Control System Vent Control Circuit Open	<Ref. to EN(H6DO)(diag)-239, DTC P0447 EVAPORATIVE EMISSION CONTROL SYSTEM VENT CONTROL CIRCUIT OPEN, Diagnostic Procedure with Diagnostic Trouble Code (DTC).>
P0448	Evaporative Emission Control System Vent Control Circuit Shorted	<Ref. to EN(H6DO)(diag)-241, DTC P0448 EVAPORATIVE EMISSION CONTROL SYSTEM VENT CONTROL CIRCUIT SHORTED, Diagnostic Procedure with Diagnostic Trouble Code (DTC).>
P0451	Evaporative Emission Control System Pressure Sensor	<Ref. to EN(H6DO)(diag)-243, DTC P0451 EVAPORATIVE EMISSION CONTROL SYSTEM PRESSURE SENSOR, Diagnostic Procedure with Diagnostic Trouble Code (DTC).>
P0452	Evaporative Emission Control System Pressure Sensor Low Input	<Ref. to EN(H6DO)(diag)-244, DTC P0452 EVAPORATIVE EMISSION CONTROL SYSTEM PRESSURE SENSOR LOW INPUT, Diagnostic Procedure with Diagnostic Trouble Code (DTC).>
P0453	Evaporative Emission Control System Pressure Sensor High Input	<Ref. to EN(H6DO)(diag)-246, DTC P0453 EVAPORATIVE EMISSION CONTROL SYSTEM PRESSURE SENSOR HIGH INPUT, Diagnostic Procedure with Diagnostic Trouble Code (DTC).>
P0456	Evaporative Emission Control System Leak Detected (Very Small Leak)	<Ref. to EN(H6DO)(diag)-248, DTC P0456 EVAPORATIVE EMISSION CONTROL SYSTEM LEAK DETECTED (VERY SMALL LEAK), Diagnostic Procedure with Diagnostic Trouble Code (DTC).>
P0457	Evaporative Emission Control System Leak Detected (Fuel Cap Loose/ Off)	<Ref. to EN(H6DO)(diag)-250, DTC P0457 EVAPORATIVE EMISSION CONTROL SYSTEM LEAK DETECTED (FUEL CAP LOOSE/OFF), Diagnostic Procedure with Diagnostic Trouble Code (DTC).>
P0458	Evaporative Emission System Purge Control Valve Circuit Low	<Ref. to EN(H6DO)(diag)-252, DTC P0458 EVAPORATIVE EMISSION SYSTEM PURGE CONTROL VALVE CIRCUIT LOW, Diagnostic Procedure with Diagnostic Trouble Code (DTC).>

GETmeMANUALS.org

List of Diagnostic Trouble Code (DTC)

DTC	Item	Note
P0459	Evaporative Emission System Purge Control Valve Circuit High	<Ref. to EN(H6DO)(diag)-254, DTC P0459 EVAPORATIVE EMISSION SYSTEM PURGE CONTROL VALVE CIRCUIT HIGH, Diagnostic Procedure with Diagnostic Trouble Code (DTC).>
P0461	Fuel Level Sensor “A” Circuit Range/Performance	<Ref. to EN(H6DO)(diag)-256, DTC P0461 FUEL LEVEL SENSOR “A” CIRCUIT RANGE/PERFORMANCE, Diagnostic Procedure with Diagnostic Trouble Code (DTC).>
P0462	Fuel Level Sensor “A” Circuit Low	<Ref. to EN(H6DO)(diag)-256, DTC P0462 FUEL LEVEL SENSOR “A” CIRCUIT LOW, Diagnostic Procedure with Diagnostic Trouble Code (DTC).>
P0463	Fuel Level Sensor “A” Circuit High	<Ref. to EN(H6DO)(diag)-257, DTC P0463 FUEL LEVEL SENSOR “A” CIRCUIT HIGH, Diagnostic Procedure with Diagnostic Trouble Code (DTC).>
P0464	Fuel Level Sensor Circuit Intermittent	<Ref. to EN(H6DO)(diag)-258, DTC P0464 FUEL LEVEL SENSOR CIRCUIT INTERMITTENT, Diagnostic Procedure with Diagnostic Trouble Code (DTC).>
P0500	Vehicle Speed Sensor “A”	<Ref. to EN(H6DO)(diag)-259, DTC P0500 VEHICLE SPEED SENSOR “A”, Diagnostic Procedure with Diagnostic Trouble Code (DTC).>
P0506	Idle Air Control System RPM Lower Than Expected	<Ref. to EN(H6DO)(diag)-260, DTC P0506 IDLE AIR CONTROL SYSTEM RPM LOWER THAN EXPECTED, Diagnostic Procedure with Diagnostic Trouble Code (DTC).>
P0507	Idle Air Control System RPM Higher Than Expected	<Ref. to EN(H6DO)(diag)-261, DTC P0507 IDLE AIR CONTROL SYSTEM RPM HIGHER THAN EXPECTED, Diagnostic Procedure with Diagnostic Trouble Code (DTC).>
P050A	Cold Start Idle Air Control System Performance	<Ref. to EN(H6DO)(diag)-262, DTC P050A COLD START IDLE AIR CONTROL SYSTEM PERFORMANCE, Diagnostic Procedure with Diagnostic Trouble Code (DTC).>
P050B	Cold Start Ignition Timing Performance	<Ref. to EN(H6DO)(diag)-270, DTC P050B COLD START IGNITION TIMING PERFORMANCE, Diagnostic Procedure with Diagnostic Trouble Code (DTC).>
P0512	Starter Request Circuit	<Ref. to EN(H6DO)(diag)-271, DTC P0512 STARTER REQUEST CIRCUIT, Diagnostic Procedure with Diagnostic Trouble Code (DTC).>
P0513	Incorrect Immobilizer Key	<Ref. to IM(diag)-16, DTC P0513 INCORRECT IMMOBILIZER KEY, Diagnostic Procedure with Diagnostic Trouble Code (DTC).>
P0604	Internal Control Module Random Access Memory (RAM) Error	<Ref. to EN(H6DO)(diag)-273, DTC P0604 INTERNAL CONTROL MODULE RANDOM ACCESS MEMORY (RAM) ERROR, Diagnostic Procedure with Diagnostic Trouble Code (DTC).>
P0605	Internal Control Module Read Only Memory (ROM) Error	<Ref. to EN(H6DO)(diag)-273, DTC P0605 INTERNAL CONTROL MODULE READ ONLY MEMORY (ROM) ERROR, Diagnostic Procedure with Diagnostic Trouble Code (DTC).>
P0607	Throttle Control System Circuit Range/Performance	<Ref. to EN(H6DO)(diag)-274, DTC P0607 THROTTLE CONTROL SYSTEM CIRCUIT RANGE/PERFORMANCE, Diagnostic Procedure with Diagnostic Trouble Code (DTC).>
P0638	Throttle Actuator Control Range/Performance (Bank 1)	<Ref. to EN(H6DO)(diag)-275, DTC P0638 THROTTLE ACTUATOR CONTROL RANGE/PERFORMANCE (BANK 1), Diagnostic Procedure with Diagnostic Trouble Code (DTC).>
P0700	Transmission Control System (MIL Request)	<Ref. to EN(H6DO)(diag)-275, DTC P0700 TRANSMISSION CONTROL SYSTEM (MIL REQUEST), Diagnostic Procedure with Diagnostic Trouble Code (DTC).>
P1152	O2 Sensor Circuit Range/Performance (Low) (Bank1 Sensor1)	<Ref. to EN(H6DO)(diag)-276, DTC P1152 O2 SENSOR CIRCUIT RANGE/PERFORMANCE (LOW) (BANK1 SENSOR1), Diagnostic Procedure with Diagnostic Trouble Code (DTC).>
P1153	O2 Sensor Circuit Range/Performance (High) (Bank1 Sensor1)	<Ref. to EN(H6DO)(diag)-278, DTC P1153 O2 SENSOR CIRCUIT RANGE/PERFORMANCE (HIGH) (BANK1 SENSOR1), Diagnostic Procedure with Diagnostic Trouble Code (DTC).>
P1154	O2 Sensor Circuit Range/Performance (Low) (Bank 2 Sensor 1)	<Ref. to EN(H6DO)(diag)-280, DTC P1154 O2 SENSOR CIRCUIT RANGE/PERFORMANCE (LOW) (BANK 2 SENSOR 1), Diagnostic Procedure with Diagnostic Trouble Code (DTC).>

GETmeMANUALS.org

List of Diagnostic Trouble Code (DTC)

DTC	Item	Note
P1155	O2 Sensor Circuit Range/Performance (High) (Bank 2 Sensor 1)	<Ref. to EN(H6DO)(diag)-282, DTC P1155 O2 SENSOR CIRCUIT RANGE/PERFORMANCE (HIGH) (BANK 2 SENSOR 1), Diagnostic Procedure with Diagnostic Trouble Code (DTC).>
P1160	Return Spring Failure	<Ref. to EN(H6DO)(diag)-283, DTC P1160 RETURN SPRING FAILURE, Diagnostic Procedure with Diagnostic Trouble Code (DTC).>
P1443	Vent Control Solenoid Valve Function Problem	<Ref. to EN(H6DO)(diag)-284, DTC P1443 VENT CONTROL SOLENOID VALVE FUNCTION PROBLEM, Diagnostic Procedure with Diagnostic Trouble Code (DTC).>
P1492	EGR Solenoid Valve Signal #1 Circuit Malfunction (Low Input)	<Ref. to EN(H6DO)(diag)-284, DTC P1492 EGR SOLENOID VALVE SIGNAL #1 CIRCUIT MALFUNCTION (LOW INPUT), Diagnostic Procedure with Diagnostic Trouble Code (DTC).>
P1493	EGR Solenoid Valve Signal #1 Circuit Malfunction (High Input)	<Ref. to EN(H6DO)(diag)-284, DTC P1493 EGR SOLENOID VALVE SIGNAL #1 CIRCUIT MALFUNCTION (HIGH INPUT), Diagnostic Procedure with Diagnostic Trouble Code (DTC).>
P1494	EGR Solenoid Valve Signal #2 Circuit Malfunction (Low Input)	<Ref. to EN(H6DO)(diag)-285, DTC P1494 EGR SOLENOID VALVE SIGNAL #2 CIRCUIT MALFUNCTION (LOW INPUT), Diagnostic Procedure with Diagnostic Trouble Code (DTC).>
P1495	EGR Solenoid Valve Signal #2 Circuit Malfunction (High Input)	<Ref. to EN(H6DO)(diag)-285, DTC P1495 EGR SOLENOID VALVE SIGNAL #2 CIRCUIT MALFUNCTION (HIGH INPUT), Diagnostic Procedure with Diagnostic Trouble Code (DTC).>
P1496	EGR Solenoid Valve Signal #3 Circuit Malfunction (Low Input)	<Ref. to EN(H6DO)(diag)-285, DTC P1496 EGR SOLENOID VALVE SIGNAL #3 CIRCUIT MALFUNCTION (LOW INPUT), Diagnostic Procedure with Diagnostic Trouble Code (DTC).>
P1497	EGR Solenoid Valve Signal #3 Circuit Malfunction (High Input)	<Ref. to EN(H6DO)(diag)-285, DTC P1497 EGR SOLENOID VALVE SIGNAL #3 CIRCUIT MALFUNCTION (HIGH INPUT), Diagnostic Procedure with Diagnostic Trouble Code (DTC).>
P1498	EGR Solenoid Valve Signal #4 Circuit Malfunction (Low Input)	<Ref. to EN(H6DO)(diag)-286, DTC P1498 EGR SOLENOID VALVE SIGNAL #4 CIRCUIT MALFUNCTION (LOW INPUT), Diagnostic Procedure with Diagnostic Trouble Code (DTC).>
P1499	EGR Solenoid Valve Signal #4 Circuit Malfunction (High Input)	<Ref. to EN(H6DO)(diag)-289, DTC P1499 EGR SOLENOID VALVE SIGNAL #4 CIRCUIT MALFUNCTION (HIGH INPUT), Diagnostic Procedure with Diagnostic Trouble Code (DTC).>
P1518	Starter Switch Circuit Low Input	<Ref. to EN(H6DO)(diag)-292, DTC P1518 STARTER SWITCH CIRCUIT LOW INPUT, Diagnostic Procedure with Diagnostic Trouble Code (DTC).>
P1560	Back-Up Voltage Circuit Malfunction	<Ref. to EN(H6DO)(diag)-294, DTC P1560 BACK-UP VOLTAGE CIRCUIT MALFUNCTION, Diagnostic Procedure with Diagnostic Trouble Code (DTC).>
P1570	Antenna	<Ref. to IM(diag)-17, DTC P1570 ANTENNA, Diagnostic Procedure with Diagnostic Trouble Code (DTC).>
P1571	Reference Code Incompatibility	<Ref. to IM(diag)-19, DTC P1571 REFERENCE CODE INCOMPATIBILITY, Diagnostic Procedure with Diagnostic Trouble Code (DTC).>
P1572	IMM Circuit Failure (Except Antenna Circuit)	<Ref. to IM(diag)-20, DTC P1572 IMM CIRCUIT FAILURE (EXCEPT ANTENNA CIRCUIT), Diagnostic Procedure with Diagnostic Trouble Code (DTC).>
P1574	Key Communication Failure	<Ref. to IM(diag)-22, DTC P1574 KEY COMMUNICATION FAILURE, Diagnostic Procedure with Diagnostic Trouble Code (DTC).>
P1576	EGI Control Module EEPROM	<Ref. to IM(diag)-22, DTC P1576 EGI CONTROL MODULE EEPROM, Diagnostic Procedure with Diagnostic Trouble Code (DTC).>
P1577	IMM Control Module EEPROM	<Ref. to IM(diag)-23, DTC P1577 IMM CONTROL MODULE EEPROM, Diagnostic Procedure with Diagnostic Trouble Code (DTC).>
P1578	Meter Failure	<Ref. to IM(diag)-24, DTC P1578 METER FAILURE, Diagnostic Procedure with Diagnostic Trouble Code (DTC).>
P2088	Intake Camshaft Position Actuator Control Circuit Low (Bank 1)	<Ref. to EN(H6DO)(diag)-296, DTC P2088 INTAKE CAMSHAFT POSITION ACTUATOR CONTROL CIRCUIT LOW (BANK 1), Diagnostic Procedure with Diagnostic Trouble Code (DTC).>

GETmeMANUALS.org

DTC	Item	Note
P2089	Intake Camshaft Position Actuator Control Circuit High (Bank 1)	<Ref. to EN(H6DO)(diag)-298, DTC P2089 INTAKE CAMSHAFT POSITION ACTUATOR CONTROL CIRCUIT HIGH (BANK 1), Diagnostic Procedure with Diagnostic Trouble Code (DTC).>
P2090	Exhaust Camshaft Position Actuator Control Circuit Low (Bank 1)	<Ref. to EN(H6DO)(diag)-300, DTC P2090 EXHAUST CAMSHAFT POSITION ACTUATOR CONTROL CIRCUIT LOW (BANK 1), Diagnostic Procedure with Diagnostic Trouble Code (DTC).>
P2091	Exhaust Camshaft Position Actuator Control Circuit High (Bank 1)	<Ref. to EN(H6DO)(diag)-302, DTC P2091 EXHAUST CAMSHAFT POSITION ACTUATOR CONTROL CIRCUIT HIGH (BANK 1), Diagnostic Procedure with Diagnostic Trouble Code (DTC).>
P2092	Intake Camshaft Position Actuator Control Circuit Low (Bank 2)	<Ref. to EN(H6DO)(diag)-304, DTC P2092 INTAKE CAMSHAFT POSITION ACTUATOR CONTROL CIRCUIT LOW (BANK 2), Diagnostic Procedure with Diagnostic Trouble Code (DTC).>
P2093	Intake Camshaft Position Actuator Control Circuit High (Bank 2)	<Ref. to EN(H6DO)(diag)-306, DTC P2093 INTAKE CAMSHAFT POSITION ACTUATOR CONTROL CIRCUIT HIGH (BANK 2), Diagnostic Procedure with Diagnostic Trouble Code (DTC).>
P2094	Exhaust Camshaft Position Actuator Control Circuit Low (Bank 2)	<Ref. to EN(H6DO)(diag)-308, DTC P2094 EXHAUST CAMSHAFT POSITION ACTUATOR CONTROL CIRCUIT LOW (BANK 2), Diagnostic Procedure with Diagnostic Trouble Code (DTC).>
P2095	Exhaust Camshaft Position Actuator Control Circuit High (Bank 2)	<Ref. to EN(H6DO)(diag)-310, DTC P2095 EXHAUST CAMSHAFT POSITION ACTUATOR CONTROL CIRCUIT HIGH (BANK 2), Diagnostic Procedure with Diagnostic Trouble Code (DTC).>
P2096	Post Catalyst Fuel Trim System Too Lean (Bank 1)	<Ref. to EN(H6DO)(diag)-312, DTC P2096 POST CATALYST FUEL TRIM SYSTEM TOO LEAN (BANK 1), Diagnostic Procedure with Diagnostic Trouble Code (DTC).>
P2097	Post Catalyst Fuel Trim System Too Rich (Bank 1)	<Ref. to EN(H6DO)(diag)-318, DTC P2097 POST CATALYST FUEL TRIM SYSTEM TOO RICH (BANK 1), Diagnostic Procedure with Diagnostic Trouble Code (DTC).>
P2098	Post Catalyst Fuel Trim System Too Lean Bank 2	<Ref. to EN(H6DO)(diag)-324, DTC P2098 POST CATALYST FUEL TRIM SYSTEM TOO LEAN BANK 2, Diagnostic Procedure with Diagnostic Trouble Code (DTC).>
P2099	Post Catalyst Fuel Trim System Too Rich Bank 2	<Ref. to EN(H6DO)(diag)-330, DTC P2099 POST CATALYST FUEL TRIM SYSTEM TOO RICH BANK 2, Diagnostic Procedure with Diagnostic Trouble Code (DTC).>
P2101	Throttle Actuator Control Motor Circuit Range/Performance	<Ref. to EN(H6DO)(diag)-336, DTC P2101 THROTTLE ACTUATOR CONTROL MOTOR CIRCUIT RANGE/PERFORMANCE, Diagnostic Procedure with Diagnostic Trouble Code (DTC).>
P2102	Throttle Actuator Control Motor Circuit Low	<Ref. to EN(H6DO)(diag)-341, DTC P2102 THROTTLE ACTUATOR CONTROL MOTOR CIRCUIT LOW, Diagnostic Procedure with Diagnostic Trouble Code (DTC).>
P2103	Throttle Actuator Control Motor Circuit High	<Ref. to EN(H6DO)(diag)-343, DTC P2103 THROTTLE ACTUATOR CONTROL MOTOR CIRCUIT HIGH, Diagnostic Procedure with Diagnostic Trouble Code (DTC).>
P2109	Throttle/Pedal Position Sensor “A” Minimum Stop Performance	<Ref. to EN(H6DO)(diag)-344, DTC P2109 THROTTLE/PEDAL POSITION SENSOR “A” MINIMUM STOP PERFORMANCE, Diagnostic Procedure with Diagnostic Trouble Code (DTC).>
P2122	Throttle/Pedal Position Sensor/ Switch “D” Circuit Low Input	<Ref. to EN(H6DO)(diag)-345, DTC P2122 THROTTLE/PEDAL POSITION SENSOR/SWITCH “D” CIRCUIT LOW INPUT, Diagnostic Procedure with Diagnostic Trouble Code (DTC).>
P2123	Throttle/Pedal Position Sensor/ Switch “D” Circuit High Input	<Ref. to EN(H6DO)(diag)-347, DTC P2123 THROTTLE/PEDAL POSITION SENSOR/SWITCH “D” CIRCUIT HIGH INPUT, Diagnostic Procedure with Diagnostic Trouble Code (DTC).>
P2127	Throttle/Pedal Position Sensor/ Switch “E” Circuit Low Input	<Ref. to EN(H6DO)(diag)-349, DTC P2127 THROTTLE/PEDAL POSITION SENSOR/SWITCH “E” CIRCUIT LOW INPUT, Diagnostic Procedure with Diagnostic Trouble Code (DTC).>
P2128	Throttle/Pedal Position Sensor/ Switch “E” Circuit High Input	<Ref. to EN(H6DO)(diag)-351, DTC P2128 THROTTLE/PEDAL POSITION SENSOR/SWITCH “E” CIRCUIT HIGH INPUT, Diagnostic Procedure with Diagnostic Trouble Code (DTC).>

GETmeMANUALS.org

List of Diagnostic Trouble Code (DTC)

DTC	Item	Note
P2135	Throttle/Pedal Position Sensor/ Switch “A”/“B” Voltage Correlation	<Ref. to EN(H6DO)(diag)-353, DTC P2135 THROTTLE/PEDAL POSITION SENSOR/SWITCH “A”/“B” VOLTAGE CORRELATION, Diagnostic Procedure with Diagnostic Trouble Code (DTC).>
P2138	Throttle/Pedal Position Sensor/ Switch “D”/“E” Voltage Correlation	<Ref. to EN(H6DO)(diag)-356, DTC P2138 THROTTLE/PEDAL POSITION SENSOR/SWITCH “D”/“E” VOLTAGE CORRELATION, Diagnostic Procedure with Diagnostic Trouble Code (DTC).>
P219A	Bank 1 Air-Fuel Ratio Imbalance	<Ref. to EN(H6DO)(diag)-358, DTC P219A BANK 1 AIR-FUEL RATIO IMBALANCE, Diagnostic Procedure with Diagnostic Trouble Code (DTC).>
P219B	Bank 2 Air-Fuel Ratio Imbalance	<Ref. to EN(H6DO)(diag)-368, DTC P219B BANK 2 AIR-FUEL RATIO IMBALANCE, Diagnostic Procedure with Diagnostic Trouble Code (DTC).>
P2227	Barometric Pressure Circuit Range/ Performance	<Ref. to EN(H6DO)(diag)-378, DTC P2227 BAROMETRIC PRESSURE CIRCUIT RANGE/PERFORMANCE, Diagnostic Procedure with Diagnostic Trouble Code (DTC).>
P2228	Barometric Pressure Circuit Low	<Ref. to EN(H6DO)(diag)-378, DTC P2228 BAROMETRIC PRESSURE CIRCUIT LOW, Diagnostic Procedure with Diagnostic Trouble Code (DTC).>
P2229	Barometric Pressure Circuit High	<Ref. to EN(H6DO)(diag)-379, DTC P2229 BAROMETRIC PRESSURE CIRCUIT HIGH, Diagnostic Procedure with Diagnostic Trouble Code (DTC).>
P2610	ECM/PCM Internal Engine Off Timer Performance	<Ref. to EN(H6DO)(diag)-379, DTC P2610 ECM/PCM INTERNAL ENGINE OFF TIMER PERFORMANCE, Diagnostic Procedure with Diagnostic Trouble Code (DTC).>
U0073	CAN Failure, Bus ‘Off’ Detection	<Ref. to EN(H6DO)(diag)-379, DTC U0073 CAN FAILURE, BUS ‘OFF’ DETECTION, Diagnostic Procedure with Diagnostic Trouble Code (DTC).>
U0101	CAN (TCU) Data Not Loaded	<Ref. to EN(H6DO)(diag)-379, DTC U0101 CAN (TCU) DATA NOT LOADED, Diagnostic Procedure with Diagnostic Trouble Code (DTC).>
U0122	CAN (VDC) Data Not Loaded	<Ref. to EN(H6DO)(diag)-379, DTC U0122 CAN (VDC) DATA NOT LOADED, Diagnostic Procedure with Diagnostic Trouble Code (DTC).>
U0140	CAN (BCU) Data Not Loaded	<Ref. to EN(H6DO)(diag)-380, DTC U0140 CAN (BCU) DATA NOT LOADED, Diagnostic Procedure with Diagnostic Trouble Code (DTC).>
U0402	CAN (TCU) Data Abnormal	<Ref. to EN(H6DO)(diag)-380, DTC U0402 CAN (TCU) DATA ABNORMAL, Diagnostic Procedure with Diagnostic Trouble Code (DTC).>
U0416	CAN (VDC) Data Abnormal	<Ref. to EN(H6DO)(diag)-380, DTC U0416 CAN (VDC) DATA ABNORMAL, Diagnostic Procedure with Diagnostic Trouble Code (DTC).>
U0422	CAN (BCU) Data Abnormal	<Ref. to EN(H6DO)(diag)-380, DTC U0422 CAN (BCU) DATA ABNORMAL, Diagnostic Procedure with Diagnostic Trouble Code (DTC).>

GETmeMANUALS.org

19. Diagnostic Procedure with Diagnostic Trouble Code (DTC)

A: DTC P0011 INTAKE CAMSHAFT POSITION - TIMING OVER-ADVANCED OR SYSTEM PERFORMANCE (BANK 1)

DTC DETECTING CONDITION:

- Detected when two consecutive driving cycles with fault occur.
- GENERAL DESCRIPTION <Ref. to GD(H6DO)-11, DTC P0011 INTAKE CAMSHAFT POSITION - TIMING OVER-ADVANCED OR SYSTEM PERFORMANCE (BANK 1), Diagnostic Trouble Code (DTC) Detecting Criteria.>

TROUBLE SYMPTOM:

- Engine stalls.
- Improper idling

CAUTION:

After servicing or replacing faulty parts, perform Clear Memory Mode <Ref. to EN(H6DO)(diag)-57, OPERATION, Clear Memory Mode.>, and Inspection Mode <Ref. to EN(H6DO)(diag)-44, PROCEDURE, Inspection Mode.>.

	Step	Check	Yes	No
1	**CHECK CURRENT DATA.** 1) Start the engine and let it idle. 2) Read the value of «VVT Adv. Ang. Amount R» using the Subaru Select Monitor. NOTE: For detailed operation procedures, refer to “READ CURRENT DATA FOR ENGINE”. <Ref. to EN(H6DO)(diag)-35, Subaru Select Monitor.>	Is the value of «VVT Adv. Ang. Amount R» approx. 0 deg?	Go to step **2**.	Check the following item and repair or replace if necessary. • Oil pipe (clog) • Oil flow control solenoid valve (clog or dirt of oil routing, setting of spring) • Intake camshaft (dirt, damage of camshaft)
2	**CHECK CURRENT DATA.** 1) Drive with acceleration and deceleration at 80 km/h (50 MPH) or less. NOTE: Drive to an extent that the duty output of oil flow control solenoid valve increases. 2) Read the values of «OCV Duty R» and «VVT Adv. Ang. Amount R» using the Subaru Select Monitor. NOTE: For detailed operation procedures, refer to “READ CURRENT DATA FOR ENGINE”. <Ref. to EN(H6DO)(diag)-35, Subaru Select Monitor.>	When the value of «OCV Duty R» increases more than 10%, is the value of «VVT Adv. Ang. Amount R» approx. 0 deg?	Check the following item and repair or replace if necessary. • Oil pipe (clog) • Oil flow control solenoid valve (clog or dirt of oil routing, setting of spring) • Intake camshaft (dirt, damage of camshaft)	Perform the following procedures, and clean the oil routing. Replace the engine oil and idle the engine for 5 minutes, and then replace the oil filter and engine oil. <Ref. to LU(H6DO)-9, REPLACEMENT, Engine Oil.> <Ref. to LU(H6DO)-15, Engine Oil Filter.>

GETmeMANUALS.org

B: DTC P0014 EXHAUST AVCS SYSTEM 1 (RANGE/PERFORMANCE)

DTC DETECTING CONDITION:

- Detected when two consecutive driving cycles with fault occur.
- GENERAL DESCRIPTION <Ref. to GD(H6DO)-13, DTC P0014 EXHAUST AVCS SYSTEM 1 (RANGE/PERFORMANCE), Diagnostic Trouble Code (DTC) Detecting Criteria.>

TROUBLE SYMPTOM:

- Engine stalls.
- Improper idling

CAUTION:

After servicing or replacing faulty parts, perform Clear Memory Mode <Ref. to EN(H6DO)(diag)-57, OPERATION, Clear Memory Mode.>, and Inspection Mode <Ref. to EN(H6DO)(diag)-44, PROCEDURE, Inspection Mode.>.

	Step	Check	Yes	No
1	**CHECK CURRENT DATA.** 1) Start the engine and let it idle. 2) Read the value of «Exh. VVT Retard Ang. R» using the Subaru Select Monitor. NOTE: For detailed operation procedures, refer to “READ CURRENT DATA FOR ENGINE”. <Ref. to EN(H6DO)(diag)-35, Subaru Select Monitor.>	Is the value of «Exh. VVT Retard Ang. R» approx. 0 deg?	Go to step **2**.	Check the following item and repair or replace if necessary. • Oil pipe (clog) • Oil flow control solenoid valve (clog or dirt of oil routing, setting of spring) • Exhaust camshaft (dirt, damage of camshaft)
2	**CHECK CURRENT DATA.** 1) Drive with acceleration and deceleration at 80 km/h (50 MPH) or less. NOTE: Drive to an extent that the duty output of oil flow control solenoid valve increases. 2) Read the values of «Exh. OCV Duty R» and «Exh. VVT Retard Ang. R» using the Subaru Select Monitor. NOTE: For detailed operation procedures, refer to “READ CURRENT DATA FOR ENGINE”. <Ref. to EN(H6DO)(diag)-35, Subaru Select Monitor.>	When the value of «Exh. OCV Duty R» increases more than 10%, is the value of «Exh. VVT Retard Ang. R» approx. 0 deg?	Check the following item and repair or replace if necessary. • Oil pipe (clog) • Oil flow control solenoid valve (clog or dirt of oil routing, setting of spring) • Exhaust camshaft (dirt, damage of camshaft)	Perform the following procedures, and clean the oil routing. Replace the engine oil and idle the engine for 5 minutes, and then replace the oil filter and engine oil. <Ref. to LU(H6DO)-9, REPLACEMENT, Engine Oil.> <Ref. to LU(H6DO)-15, Engine Oil Filter.>

GETthemANSWERS.org

C: DTC P0016 CRANKSHAFT POSITION - CAMSHAFT POSITION CORRELATION (BANK1)

DTC DETECTING CONDITION:

- Detected when two consecutive driving cycles with fault occur.
- GENERAL DESCRIPTION <Ref. to GD(H6DO)-15, DTC P0016 CRANKSHAFT POSITION - CAMSHAFT POSITION CORRELATION (BANK1), Diagnostic Trouble Code (DTC) Detecting Criteria.>

TROUBLE SYMPTOM:

- Engine stalls.
- Improper idling

CAUTION:

After servicing or replacing faulty parts, perform Clear Memory Mode <Ref. to EN(H6DO)(diag)-57, OPERATION, Clear Memory Mode.>, and Inspection Mode <Ref. to EN(H6DO)(diag)-44, PROCEDURE, Inspection Mode.>.

Step		Check	Yes	No
1	**CHECK CURRENT DATA.** 1) Start the engine and let it idle. 2) Read the values of «VVT Adv. Ang. Amount R» and «OCV Duty R» using the Subaru Select Monitor. NOTE: For detailed operation procedures, refer to “READ CURRENT DATA FOR ENGINE”. <Ref. to EN(H6DO)(diag)-35, Subaru Select Monitor.>	Is the value of «VVT Adv. Ang. Amount R» approx. 0 deg, and the value of «OCV Duty R» approx. 10%?	Perform the following procedures, and clean the oil routing. Replace the engine oil and idle the engine for 5 minutes, and then replace the oil filter and engine oil. <Ref. to LU(H6DO)-9, REPLACEMENT, Engine Oil.> <Ref. to LU(H6DO)-15, Engine Oil Filter.>	Check the following item and repair or replace if necessary. • Oil pipe (clog) • Oil flow control solenoid valve (clog or dirt of oil routing, setting of spring) • Intake camshaft (dirt, damage of camshaft) • Timing chain (matching of timing mark)

GETmeMANUALS.org

D: DTC P0017 CRANK AND CAM TIMING B SYSTEM FAILURE (BANK 1)

DTC DETECTING CONDITION:

- Detected when two consecutive driving cycles with fault occur.
- GENERAL DESCRIPTION <Ref. to GD(H6DO)-17, DTC P0017 CRANK AND CAM TIMING B SYSTEM FAILURE (BANK 1), Diagnostic Trouble Code (DTC) Detecting Criteria.>

TROUBLE SYMPTOM:

- Engine stalls.
- Improper idling

CAUTION:

After servicing or replacing faulty parts, perform Clear Memory Mode <Ref. to EN(H6DO)(diag)-57, OPERATION, Clear Memory Mode.>, and Inspection Mode <Ref. to EN(H6DO)(diag)-44, PROCEDURE, Inspection Mode.>.

	Step	Check	Yes	No
1	**CHECK CURRENT DATA.** 1) Start the engine and let it idle. 2) Read the values of «Exh. VVT Retard Ang. R» and «Exh. OCV Duty R» using the Subaru Select Monitor. NOTE: For detailed operation procedures, refer to “READ CURRENT DATA FOR ENGINE”. <Ref. to EN(H6DO)(diag)-35, Subaru Select Monitor.>	Is the value of «Exh. VVT Retard Ang. R» approx. 0 deg, and the value of «Exh. OCV Duty R» approx. 10%?	Perform the following procedures, and clean the oil routing. Replace the engine oil and idle the engine for 5 minutes, and then replace the oil filter and engine oil. <Ref. to LU(H6DO)-9, REPLACEMENT, Engine Oil.> <Ref. to LU(H6DO)-15, Engine Oil Filter.>	Check the following item and repair or replace if necessary. • Oil pipe (clog) • Oil flow control solenoid valve (clog or dirt of oil routing, setting of spring) • Exhaust camshaft (dirt, damage of camshaft) • Timing chain (matching of timing mark)

GETthemANSWERS.org

E: DTC P0018 CRANKSHAFT POSITION - CAMSHAFT POSITION CORRELATION (BANK2)

DTC DETECTING CONDITION:

- Detected when two consecutive driving cycles with fault occur.
- GENERAL DESCRIPTION <Ref. to GD(H6DO)-19, DTC P0018 CRANKSHAFT POSITION - CAMSHAFT POSITION CORRELATION (BANK2), Diagnostic Trouble Code (DTC) Detecting Criteria.>

TROUBLE SYMPTOM:

- Engine stalls.
- Improper idling

CAUTION:

After servicing or replacing faulty parts, perform Clear Memory Mode <Ref. to EN(H6DO)(diag)-57, OPERATION, Clear Memory Mode.>, and Inspection Mode <Ref. to EN(H6DO)(diag)-44, PROCEDURE, Inspection Mode.>.

Step		Check	Yes	No
1	**CHECK CURRENT DATA.** 1) Start the engine and let it idle. 2) Read the values of «VVT Adv. Ang. Amount L» and «OCV Duty L» using the Subaru Select Monitor. NOTE: For detailed operation procedures, refer to “READ CURRENT DATA FOR ENGINE”. <Ref. to EN(H6DO)(diag)-35, Subaru Select Monitor.>	Is the value of «VVT Adv. Ang. Amount L» approx. 0 deg, and the value of «OCV Duty L» approx. 10%?	Perform the following procedures, and clean the oil routing. Replace the engine oil and idle the engine for 5 minutes, and then replace the oil filter and engine oil. <Ref. to LU(H6DO)-9, REPLACEMENT, Engine Oil.> <Ref. to LU(H6DO)-15, Engine Oil Filter.>	Check the following item and repair or replace if necessary. • Oil pipe (clog) • Oil flow control solenoid valve (clog or dirt of oil routing, setting of spring) • Intake camshaft (dirt, damage of camshaft) • Timing chain (matching of timing mark)

GETthemANSWERS.org

F: DTC P0019 CRANK AND CAM TIMING B SYSTEM FAILURE (BANK 2)

DTC DETECTING CONDITION:

- Detected when two consecutive driving cycles with fault occur.
- GENERAL DESCRIPTION <Ref. to GD(H6DO)-19, DTC P0019 CRANK AND CAM TIMING B SYSTEM FAILURE (BANK 2), Diagnostic Trouble Code (DTC) Detecting Criteria.>

TROUBLE SYMPTOM:

- Engine stalls.
- Improper idling

CAUTION:

After servicing or replacing faulty parts, perform Clear Memory Mode <Ref. to EN(H6DO)(diag)-57, OPERATION, Clear Memory Mode.>, and Inspection Mode <Ref. to EN(H6DO)(diag)-44, PROCEDURE, Inspection Mode.>.

	Step	Check	Yes	No
1	**CHECK CURRENT DATA.** 1) Start the engine and let it idle. 2) Read the values of «Exh. VVT Retard Ang. L» and «Exh. OCV Duty L» using the Subaru Select Monitor. NOTE: For detailed operation procedures, refer to “READ CURRENT DATA FOR ENGINE”. <Ref. to EN(H6DO)(diag)-35, Subaru Select Monitor.>	Is the value of «Exh. VVT Retard Ang. L» approx. 0 deg, and the value of «Exh. OCV Duty L» approx. 10%?	Perform the following procedures, and clean the oil routing. Replace the engine oil and idle the engine for 5 minutes, and then replace the oil filter and engine oil. <Ref. to LU(H6DO)-9, REPLACEMENT, Engine Oil.> <Ref. to LU(H6DO)-15, Engine Oil Filter.>	Check the following item and repair or replace if necessary. • Oil pipe (clog) • Oil flow control solenoid valve (clog or dirt of oil routing, setting of spring) • Exhaust camshaft (dirt, damage of camshaft) • Timing chain (matching of timing mark)

GETthemMANUALS.org

G: DTC P0021 INTAKE CAMSHAFT POSITION - TIMING OVER-ADVANCED OR SYSTEM PERFORMANCE (BANK 2)

DTC DETECTING CONDITION:

- Detected when two consecutive driving cycles with fault occur.
- GENERAL DESCRIPTION <Ref. to GD(H6DO)-19, DTC P0021 INTAKE CAMSHAFT POSITION - TIMING OVER-ADVANCED OR SYSTEM PERFORMANCE (BANK 2), Diagnostic Trouble Code (DTC) Detecting Criteria.>

TROUBLE SYMPTOM:

- Engine stalls.
- Improper idling

CAUTION:

After servicing or replacing faulty parts, perform Clear Memory Mode <Ref. to EN(H6DO)(diag)-57, OPERATION, Clear Memory Mode.>, and Inspection Mode <Ref. to EN(H6DO)(diag)-44, PROCEDURE, Inspection Mode.>.

	Step	Check	Yes	No
1	**CHECK CURRENT DATA.** 1) Start the engine and let it idle. 2) Read the value of «VVT Adv. Ang. Amount L» using the Subaru Select Monitor. NOTE: For detailed operation procedures, refer to “READ CURRENT DATA FOR ENGINE”. <Ref. to EN(H6DO)(diag)-35, Subaru Select Monitor.>	Is the value of «VVT Adv. Ang. Amount L» approx. 0 deg?	Go to step **2**.	Check the following item and repair or replace if necessary. • Oil pipe (clog) • Oil flow control solenoid valve (clog or dirt of oil routing, setting of spring) • Intake camshaft (dirt, damage of camshaft)
2	**CHECK CURRENT DATA.** 1) Drive with acceleration and deceleration at 80 km/h (50 MPH) or less. NOTE: Drive to an extent that the duty output of oil flow control solenoid valve increases. 2) Read the values of «OCV Duty L» and «VVT Adv. Ang. Amount L» using the Subaru Select Monitor. NOTE: For detailed operation procedures, refer to “READ CURRENT DATA FOR ENGINE”. <Ref. to EN(H6DO)(diag)-35, Subaru Select Monitor.>	When the value of «OCV Duty L» increases more than 10%, is the value of «VVT Adv. Ang. Amount L» approx. 0 deg?	Check the following item and repair or replace if necessary. • Oil pipe (clog) • Oil flow control solenoid valve (clog or dirt of oil routing, setting of spring) • Intake camshaft (dirt, damage of camshaft)	Perform the following procedures, and clean the oil routing. Replace the engine oil and idle the engine for 5 minutes, and then replace the oil filter and engine oil. <Ref. to LU(H6DO)-9, REPLACEMENT, Engine Oil.> <Ref. to LU(H6DO)-15, Engine Oil Filter.>

GETtheMANUALS.org

H: DTC P0024 EXHAUST AVCS SYSTEM 2 (RANGE/PERFORMANCE)

DTC DETECTING CONDITION:

- Detected when two consecutive driving cycles with fault occur.
- GENERAL DESCRIPTION <Ref. to GD(H6DO)-19, DTC P0024 EXHAUST AVCS SYSTEM 2 (RANGE/PERFORMANCE), Diagnostic Trouble Code (DTC) Detecting Criteria.>

TROUBLE SYMPTOM:

- Engine stalls.
- Improper idling

CAUTION:

After servicing or replacing faulty parts, perform Clear Memory Mode <Ref. to EN(H6DO)(diag)-57, OPERATION, Clear Memory Mode.>, and Inspection Mode <Ref. to EN(H6DO)(diag)-44, PROCEDURE, Inspection Mode.>.

	Step	Check	Yes	No
1	**CHECK CURRENT DATA.** 1) Start the engine and let it idle. 2) Read the value of «Exh. VVT Retard Ang. L» using the Subaru Select Monitor. NOTE: For detailed operation procedures, refer to “READ CURRENT DATA FOR ENGINE”. <Ref. to EN(H6DO)(diag)-35, Subaru Select Monitor.>	Is the value of «Exh. VVT Retard Ang. L» approx. 0 deg?	Go to step **2**.	Check the following item and repair or replace if necessary. • Oil pipe (clog) • Oil flow control solenoid valve (clog or dirt of oil routing, setting of spring) • Exhaust camshaft (dirt, damage of camshaft)
2	**CHECK CURRENT DATA.** 1) Drive with acceleration and deceleration at 80 km/h (50 MPH) or less. NOTE: Drive to an extent that the duty output of oil flow control solenoid valve increases. 2) Read the values of «Exh. OCV Duty L» and «Exh. VVT Retard Ang. L» using the Subaru Select Monitor. NOTE: For detailed operation procedures, refer to “READ CURRENT DATA FOR ENGINE”. <Ref. to EN(H6DO)(diag)-35, Subaru Select Monitor.>	When the value of «Exh. OCV Duty L» increases more than 10%, is the value of «Exh. VVT Retard Ang. L» approx. 0 deg?	Check the following item and repair or replace if necessary. • Oil pipe (clog) • Oil flow control solenoid valve (clog or dirt of oil routing, setting of spring) • Exhaust camshaft (dirt, damage of camshaft)	Perform the following procedures, and clean the oil routing. Replace the engine oil and idle the engine for 5 minutes, and then replace the oil filter and engine oil. <Ref. to LU(H6DO)-9, REPLACEMENT, Engine Oil.> <Ref. to LU(H6DO)-15, Engine Oil Filter.>

GETTHEMANUALS.org

I: DTC P0030 HO2S HEATER CONTROL CIRCUIT (BANK 1 SENSOR 1)

DTC DETECTING CONDITION:

- Detected when two consecutive driving cycles with fault occur.
- GENERAL DESCRIPTION <Ref. to GD(H6DO)-20, DTC P0030 HO2S HEATER CONTROL CIRCUIT (BANK 1 SENSOR 1), Diagnostic Trouble Code (DTC) Detecting Criteria.>

CAUTION:

After servicing or replacing faulty parts, perform Clear Memory Mode <Ref. to EN(H6DO)(diag)-57, OPERATION, Clear Memory Mode.>, and Inspection Mode <Ref. to EN(H6DO)(diag)-44, PROCEDURE, Inspection Mode.>.

WIRING DIAGRAM:

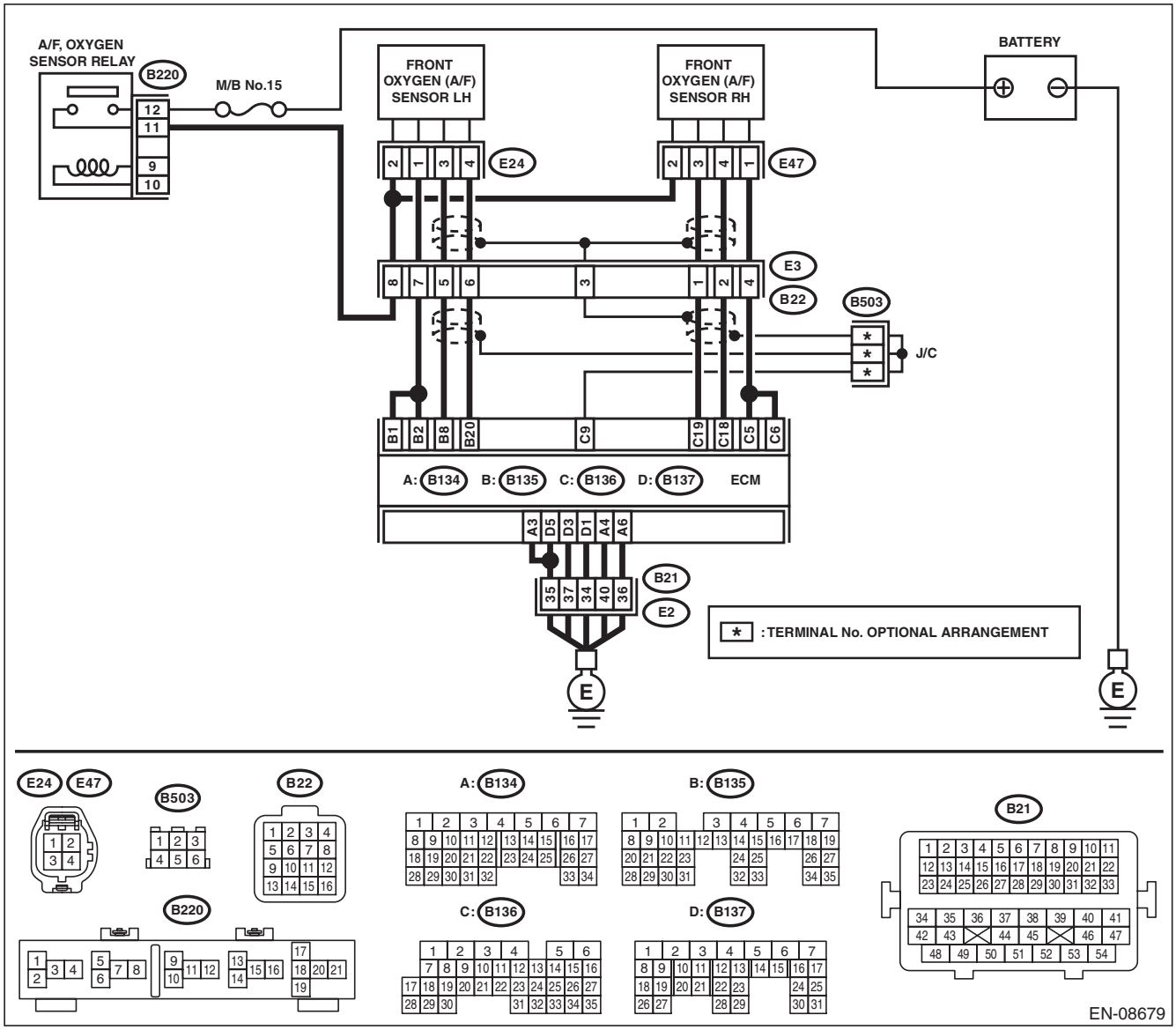

GETTHEMANUALS.org

	Step	Check	Yes	No
1	**CHECK HARNESS BETWEEN ECM AND FRONT OXYGEN (A/F) SENSOR CONNECTOR.** 1) Start and warm up the engine. 2) Turn the ignition switch to OFF. 3) Disconnect the connectors from ECM and front oxygen (A/F) sensor. 4) Measure the resistance of harness between ECM and front oxygen (A/F) sensor connector. ***Connector & terminal*** ***(B136) No. 5 — (E47) No. 1:*** ***(B136) No. 6 — (E47) No. 1:*** ***(B136) No. 19 — (E47) No. 3:*** ***(B136) No. 18 — (E47) No. 4:***	Is the resistance less than 1 Ω?	Go to step **2**.	Repair the harness and connector. NOTE: In this case, repair the following item: • Open circuit in harness between ECM and front oxygen (A/F) sensor connector • Poor contact of coupling connector	
2	**CHECK FRONT OXYGEN (A/F) SENSOR.** Measure the resistance between front oxygen (A/F) sensor connector terminals. ***Terminals*** ***No. 2 — No. 1:***	Is the resistance 2 — 3 Ω?	Go to step **3**.	Replace the front oxygen (A/F) sensor. <Ref. to FU(H6DO)-50, Front Oxygen (A/F) Sensor.>
3	**CHECK FOR POOR CONTACT.** Check for poor contact of ECM and front oxygen (A/F) sensor connector.	Is there poor contact of ECM or front oxygen (A/F) sensor connector?	Repair the poor contact of ECM or front oxygen (A/F) sensor connector.	Replace the front oxygen (A/F) sensor. <Ref. to FU(H6DO)-50, Front Oxygen (A/F) Sensor.>

GETtheMANUALS.org

J: DTC P0031 HO2S HEATER CONTROL CIRCUIT LOW (BANK 1 SENSOR 1)

DTC DETECTING CONDITION:

- Immediately at fault recognition
- GENERAL DESCRIPTION <Ref. to GD(H6DO)-22, DTC P0031 HO2S HEATER CONTROL CIRCUIT LOW (BANK 1 SENSOR 1), Diagnostic Trouble Code (DTC) Detecting Criteria.>

CAUTION:

After servicing or replacing faulty parts, perform Clear Memory Mode <Ref. to EN(H6DO)(diag)-57, OPERATION, Clear Memory Mode.>, and Inspection Mode <Ref. to EN(H6DO)(diag)-44, PROCEDURE, Inspection Mode.>.

WIRING DIAGRAM:

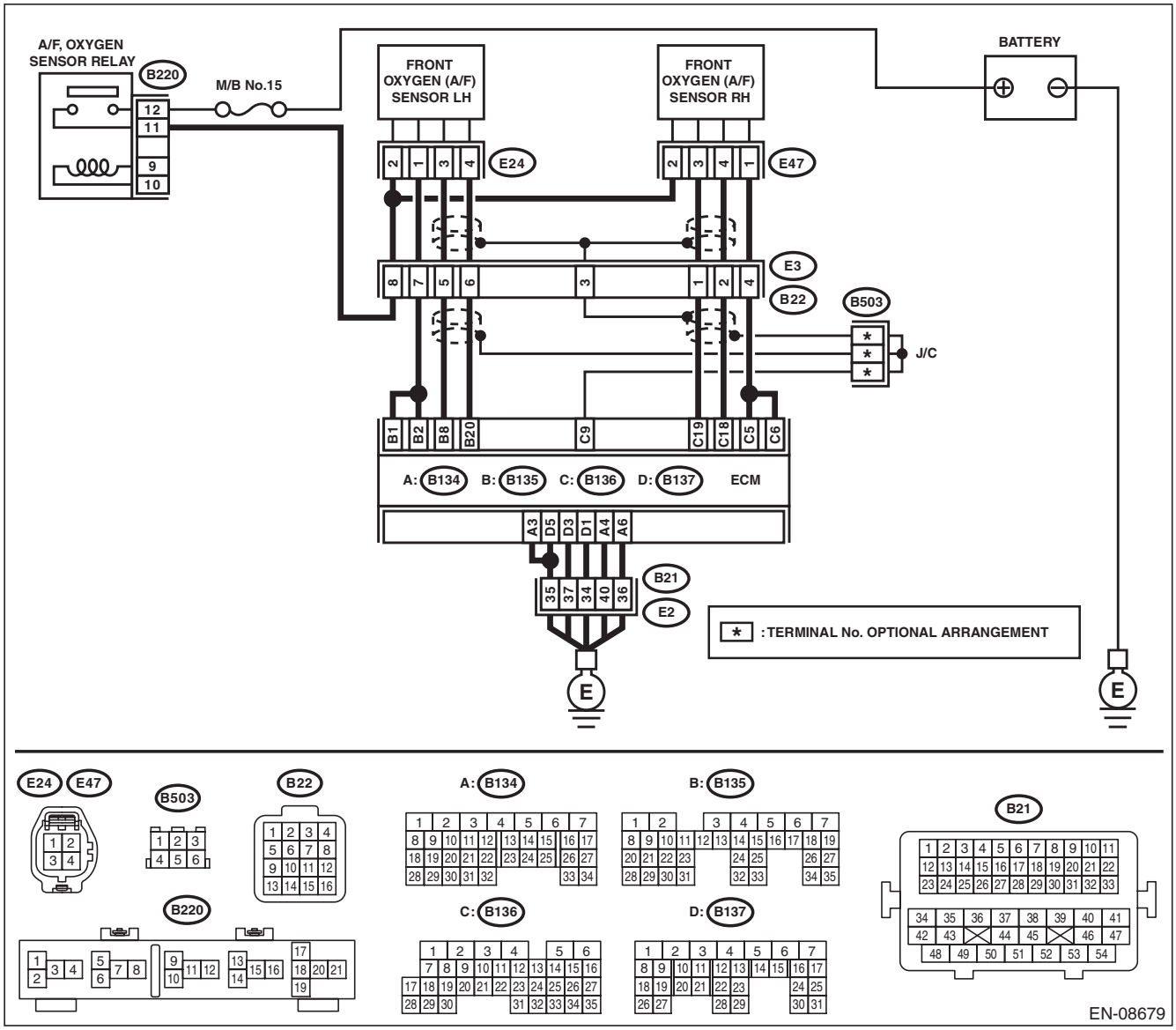

GETtheMANUALS.org

	Step	Check	Yes	No
1	**CHECK POWER SUPPLY TO FRONT OXYGEN (A/F) SENSOR.** 1) Turn the ignition switch to OFF. 2) Disconnect the connectors from front oxygen (A/F) sensor. 3) Turn the ignition switch to ON. 4) Measure the voltage between front oxygen (A/F) sensor connector and engine ground. ***Connector & terminal*** ***(E47) No. 2 (+) — Engine ground (–):***	Is the voltage 10 V or more?	Go to step **2**.	Repair the power supply line. NOTE: In this case, repair the following item: • Open circuit in harness between A/F, oxygen sensor relay and front oxygen (A/F) sensor connector • Poor contact of A/F, oxygen sensor relay connector • Poor contact of coupling connector • Malfunction of A/F, oxygen sensor relay
2	**CHECK HARNESS BETWEEN ECM AND FRONT OXYGEN (A/F) SENSOR CONNECTOR.** 1) Turn the ignition switch to OFF. 2) Disconnect the connectors from ECM. 3) Measure the resistance between ECM and front oxygen (A/F) sensor connector. ***Connector & terminal*** ***(B136) No. 5 — (E47) No. 1:*** ***(B136) No. 6 — (E47) No. 1:***	Is the resistance less than 1 Ω?	Go to step **3**.	Repair the harness and connector. NOTE: In this case, repair the following item: • Open circuit in harness between ECM and front oxygen (A/F) sensor connector • Poor contact of coupling connector
3	**CHECK GROUND CIRCUIT FOR ECM.** Measure the resistance of harness between ECM and chassis ground. ***Connector & terminal*** ***(B134) No. 3 — Chassis ground:*** ***(B134) No. 4 — Chassis ground:*** ***(B134) No. 6 — Chassis ground:*** ***(B137) No. 1 — Chassis ground:*** ***(B137) No. 3 — Chassis ground:*** ***(B137) No. 5 — Chassis ground:***	Is the resistance less than 5 Ω?	Go to step **4**.	Repair the harness and connector. NOTE: In this case, repair the following item: • Open circuit of harness between ECM and engine ground • Poor contact of coupling connector
4	**CHECK FRONT OXYGEN (A/F) SENSOR.** Measure the resistance between front oxygen (A/F) sensor connector terminals. ***Terminals*** ***No. 2 — No. 1:***	Is the resistance 2 — 3 Ω?	Repair the poor contact of ECM connector.	Replace the front oxygen (A/F) sensor. <Ref. to FU(H6DO)-50, Front Oxygen (A/F) Sensor.>

GETTHEMANUALS.org

K: DTC P0032 HO2S HEATER CONTROL CIRCUIT HIGH (BANK 1 SENSOR 1)

DTC DETECTING CONDITION:

- Immediately at fault recognition
- GENERAL DESCRIPTION <Ref. to GD(H6DO)-24, DTC P0032 HO2S HEATER CONTROL CIRCUIT HIGH (BANK 1 SENSOR 1), Diagnostic Trouble Code (DTC) Detecting Criteria.>

CAUTION:

After servicing or replacing faulty parts, perform Clear Memory Mode <Ref. to EN(H6DO)(diag)-57, OPERATION, Clear Memory Mode.>, and Inspection Mode <Ref. to EN(H6DO)(diag)-44, PROCEDURE, Inspection Mode.>.

WIRING DIAGRAM:

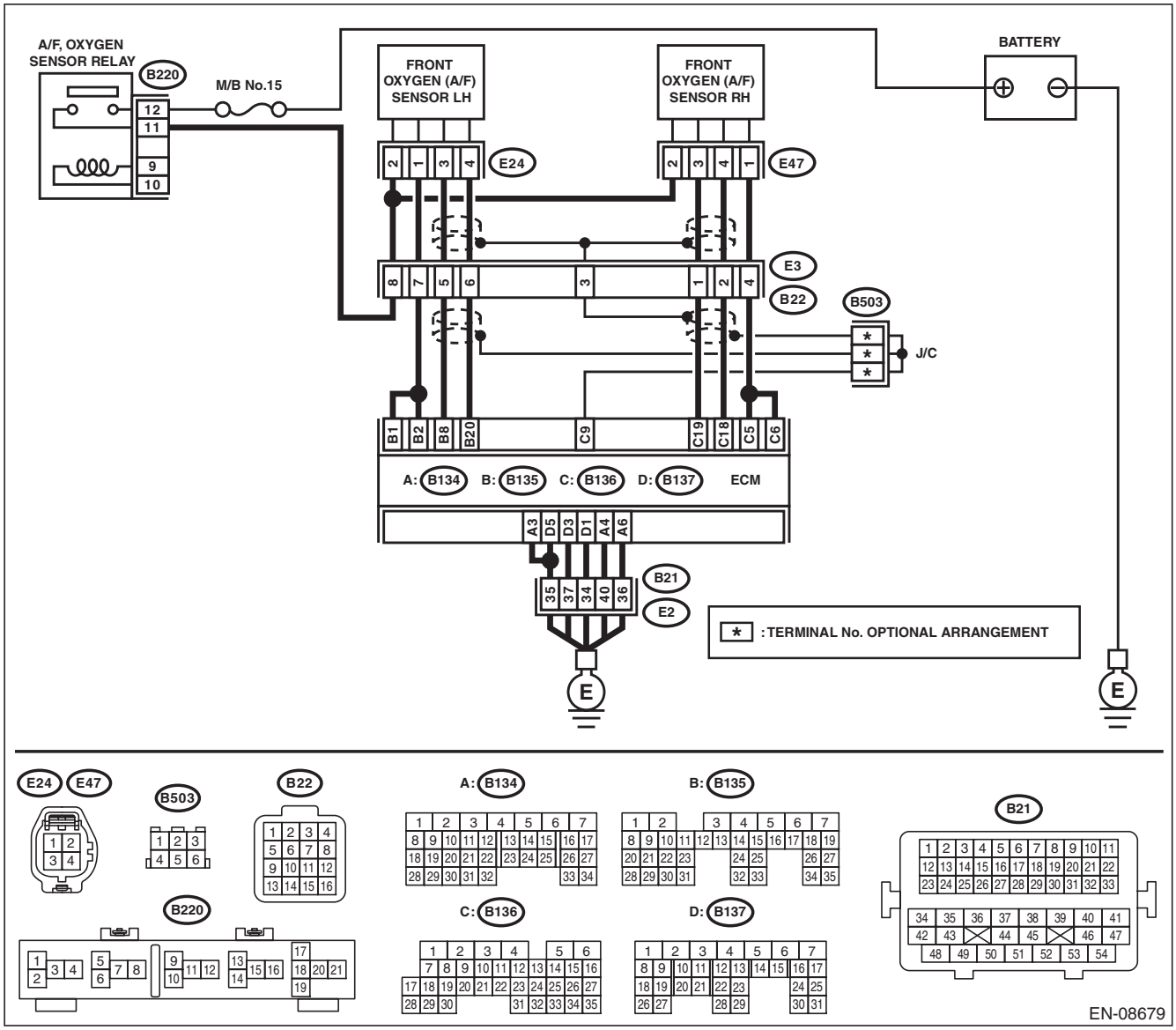

GETtheMANUALS.org

Step		Check	Yes	No
1	**CHECK HARNESS BETWEEN ECM AND FRONT OXYGEN (A/F) SENSOR CONNECTOR.** 1) Turn the ignition switch to OFF. 2) Measure the voltage between ECM and chassis ground. ***Connector & terminal*** ***(B136) No. 5 (+) — Chassis ground (–):*** ***(B136) No. 6 (+) — Chassis ground (–):***	Is the voltage 10 V or more?	Repair the short circuit to power in the harness between ECM and front oxygen (A/F) sensor connector.	Go to step **2**.
2	**CHECK GROUND CIRCUIT FOR ECM.** 1) Disconnect the connectors from ECM. 2) Measure the resistance between ECM and chassis ground. ***Connector & terminal*** ***(B134) No. 3 — Chassis ground:*** ***(B134) No. 4 — Chassis ground:*** ***(B134) No. 6 — Chassis ground:*** ***(B137) No. 1 — Chassis ground:*** ***(B137) No. 3 — Chassis ground:*** ***(B137) No. 5 — Chassis ground:***	Is the resistance less than 5 Ω?	Repair the poor contact of ECM connector.	Repair the harness and connector. NOTE: In this case, repair the following item: • Open circuit of harness between ECM and engine ground • Poor contact of coupling connector

GETTHEMANUALS.org

L: DTC P0037 HO2S HEATER CONTROL CIRCUIT LOW (BANK 1 SENSOR 2)

DTC DETECTING CONDITION:

- Detected when two consecutive driving cycles with fault occur.
- GENERAL DESCRIPTION <Ref. to GD(H6DO)-26, DTC P0037 HO2S HEATER CONTROL CIRCUIT LOW (BANK 1 SENSOR 2), Diagnostic Trouble Code (DTC) Detecting Criteria.>

CAUTION:

After servicing or replacing faulty parts, perform Clear Memory Mode <Ref. to EN(H6DO)(diag)-57, OPERATION, Clear Memory Mode.>, and Inspection Mode <Ref. to EN(H6DO)(diag)-44, PROCEDURE, Inspection Mode.>.

WIRING DIAGRAM:

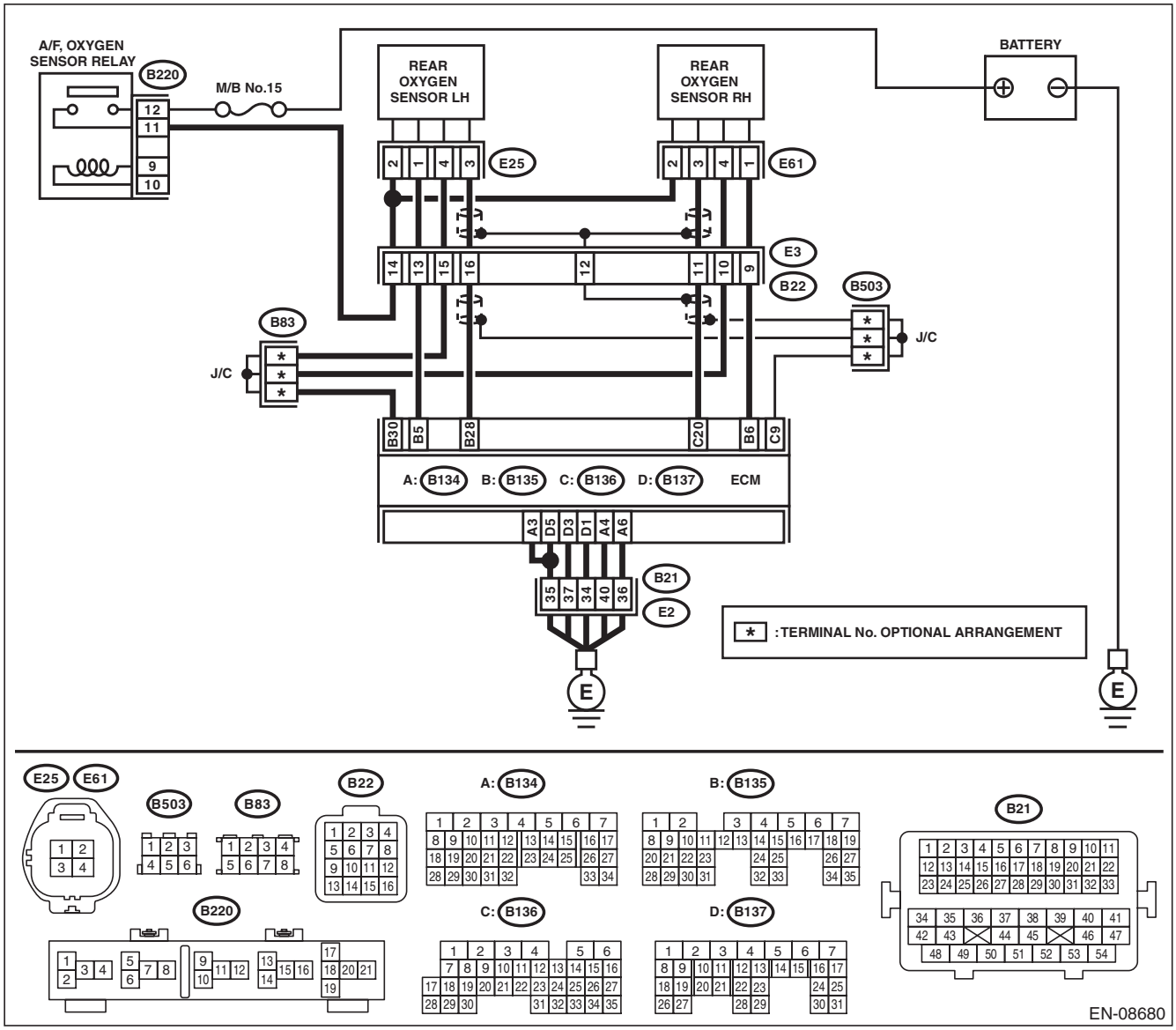

GETTHEMANUALS.org

	Step	Check	Yes	No
1	**CHECK POWER SUPPLY TO REAR OXYGEN SENSOR.** 1) Turn the ignition switch to OFF. 2) Disconnect the connector from rear oxygen sensor. 3) Turn the ignition switch to ON. 4) Measure the voltage between rear oxygen sensor connector and engine ground. ***Connector & terminal*** ***(E61) No. 2 (+) — Engine ground (–):***	Is the voltage 10 V or more?	Go to step **2**.	Repair the power supply line. NOTE: In this case, repair the following item: • Open circuit in harness between A/F, oxygen sensor relay and rear oxygen sensor connector • Poor contact of A/F, oxygen sensor relay connector • Poor contact of coupling connector • Malfunction of A/F, oxygen sensor relay
2	**CHECK HARNESS BETWEEN ECM AND REAR OXYGEN SENSOR CONNECTOR.** 1) Turn the ignition switch to OFF. 2) Disconnect the connector from ECM. 3) Measure the resistance between ECM and oxygen sensor connector. ***Connector & terminal*** ***(B135) No. 6 — (E61) No. 1:***	Is the resistance less than 1 Ω?	Go to step **3**.	Repair the harness and connector. NOTE: In this case, repair the following item: • Open circuit in harness between ECM and rear oxygen sensor connector • Poor contact of coupling connector
3	**CHECK GROUND CIRCUIT FOR ECM.** Measure the resistance of harness between ECM and chassis ground. ***Connector & terminal*** ***(B134) No. 3 — Chassis ground:*** ***(B134) No. 4 — Chassis ground:*** ***(B134) No. 6 — Chassis ground:*** ***(B137) No. 1 — Chassis ground:*** ***(B137) No. 3 — Chassis ground:*** ***(B137) No. 5 — Chassis ground:***	Is the resistance less than 5 Ω?	Go to step **4**.	Repair the harness and connector. NOTE: In this case, repair the following item: • Open circuit of harness between ECM and engine ground • Poor contact of coupling connector
4	**CHECK REAR OXYGEN SENSOR.** Measure the resistance between rear oxygen sensor connector terminals. ***Terminals*** ***No. 2 — No. 1:***	Is the resistance 5 — 7 Ω?	Repair the poor contact of ECM connector.	Replace the rear oxygen sensor. <Ref. to FU(H6DO)-52, Rear Oxygen Sensor.>

GETthemMANUALS.org

M: DTC P0038 HO2S HEATER CONTROL CIRCUIT HIGH (BANK 1 SENSOR 2)

DTC DETECTING CONDITION:

- Detected when two consecutive driving cycles with fault occur.
- GENERAL DESCRIPTION <Ref. to GD(H6DO)-28, DTC P0038 HO2S HEATER CONTROL CIRCUIT HIGH (BANK 1 SENSOR 2), Diagnostic Trouble Code (DTC) Detecting Criteria.>

CAUTION:

After servicing or replacing faulty parts, perform Clear Memory Mode <Ref. to EN(H6DO)(diag)-57, OPERATION, Clear Memory Mode.>, and Inspection Mode <Ref. to EN(H6DO)(diag)-44, PROCEDURE, Inspection Mode.>.

WIRING DIAGRAM:

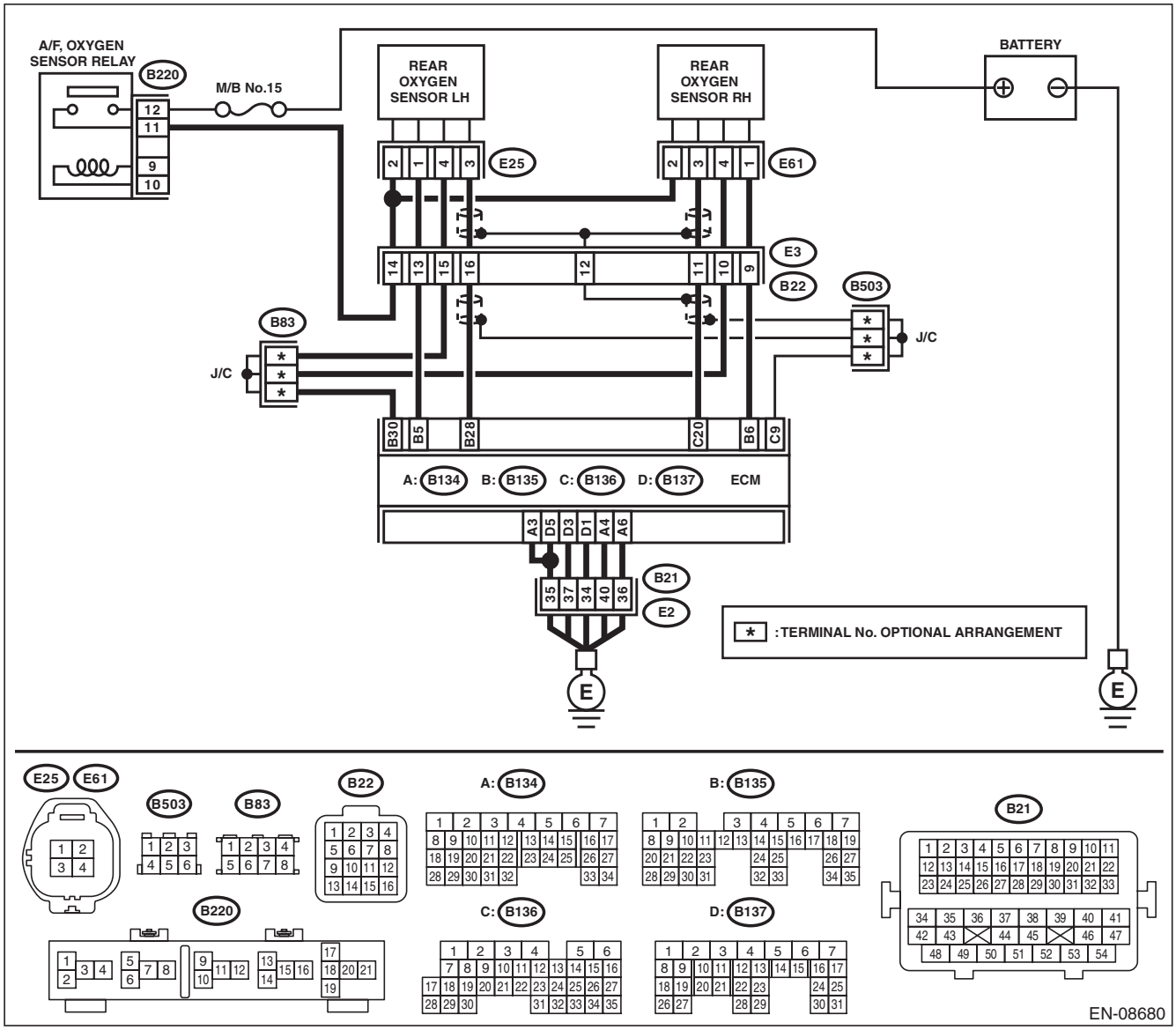

Step		Check	Yes	No
1	**CHECK HARNESS BETWEEN ECM AND REAR OXYGEN SENSOR CONNECTOR.** 1) Turn the ignition switch to OFF. 2) Measure the voltage between ECM and chassis ground. ***Connector & terminal*** ***(B135) No. 6 (+) — Chassis ground (–):***	Is the voltage 10 V or more?	Repair the short circuit to power in the harness between ECM and rear oxygen sensor connector.	Go to step **2**.

GETTHEMANUALS.org

Step		Check	Yes	No
2	**CHECK GROUND CIRCUIT FOR ECM.** 1) Disconnect the connector from ECM. 2) Measure the resistance between ECM and chassis ground. ***Connector & terminal*** ***(B134) No. 3 — Chassis ground:*** ***(B134) No. 4 — Chassis ground:*** ***(B134) No. 6 — Chassis ground:*** ***(B137) No. 1 — Chassis ground:*** ***(B137) No. 3 — Chassis ground:*** ***(B137) No. 5 — Chassis ground:***	Is the resistance less than 5 Ω?	Repair the poor contact of ECM connector.	Repair the harness and connector. NOTE: In this case, repair the following item: • Open circuit of harness between ECM and engine ground • Poor contact of coupling connector

GETTHEMANUALS.org

N: DTC P0050 HO2S HEATER CONTROL CIRCUIT (BANK 2 SENSOR 1)

DTC DETECTING CONDITION:

- Detected when two consecutive driving cycles with fault occur.
- GENERAL DESCRIPTION <Ref. to GD(H6DO)-30, DTC P0050 HO2S HEATER CONTROL CIRCUIT (BANK 2 SENSOR 1), Diagnostic Trouble Code (DTC) Detecting Criteria.>

CAUTION:

After servicing or replacing faulty parts, perform Clear Memory Mode <Ref. to EN(H6DO)(diag)-57, OPERATION, Clear Memory Mode.>, and Inspection Mode <Ref. to EN(H6DO)(diag)-44, PROCEDURE, Inspection Mode.>.

WIRING DIAGRAM:

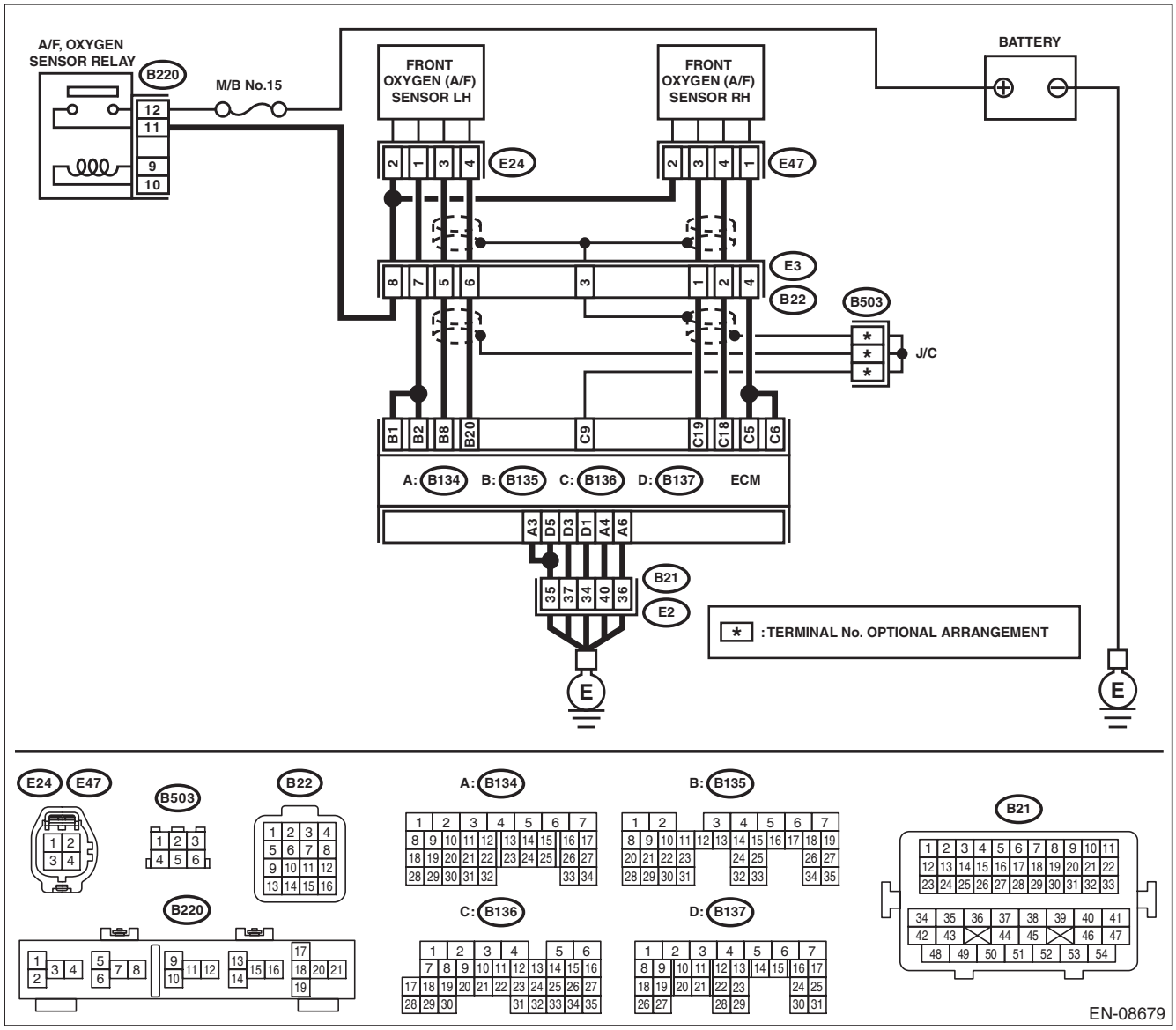

GETTHEMANUALS.org

	Step	Check	Yes	No
1	**CHECK HARNESS BETWEEN ECM AND FRONT OXYGEN (A/F) SENSOR CONNECTOR.** 1) Start and warm up the engine. 2) Turn the ignition switch to OFF. 3) Disconnect the connectors from ECM and front oxygen (A/F) sensor. 4) Measure the resistance of harness between ECM and front oxygen (A/F) sensor connector. ***Connector & terminal*** ***(B135) No. 1 — (E24) No. 1:*** ***(B135) No. 2 — (E24) No. 1:*** ***(B135) No. 8 — (E24) No. 3:*** ***(B135) No. 20 — (E24) No. 4:***	Is the resistance less than 1 Ω?	Go to step **2**.	Repair the harness and connector. NOTE: In this case, repair the following item: • Open circuit in harness between ECM and front oxygen (A/F) sensor connector • Poor contact of coupling connector	
2	**CHECK FRONT OXYGEN (A/F) SENSOR.** Measure the resistance between front oxygen (A/F) sensor connector terminals. ***Terminals*** ***No. 2 — No. 1:***	Is the resistance 2 — 3 Ω?	Go to step **3**.	Replace the front oxygen (A/F) sensor. <Ref. to FU(H6DO)-50, Front Oxygen (A/F) Sensor.>
3	**CHECK FOR POOR CONTACT.** Check for poor contact of ECM and front oxygen (A/F) sensor connector.	Is there poor contact of ECM or front oxygen (A/F) sensor connector?	Repair the poor contact of ECM or front oxygen (A/F) sensor connector.	Replace the front oxygen (A/F) sensor. <Ref. to FU(H6DO)-50, Front Oxygen (A/F) Sensor.>

GETtheMANUALS.org

O: DTC P0051 HO2S HEATER CONTROL CIRCUIT LOW (BANK 2 SENSOR 1)

DTC DETECTING CONDITION:

- Immediately at fault recognition
- GENERAL DESCRIPTION <Ref. to GD(H6DO)-30, DTC P0051 HO2S HEATER CONTROL CIRCUIT LOW (BANK 2 SENSOR 1), Diagnostic Trouble Code (DTC) Detecting Criteria.>

CAUTION:

After servicing or replacing faulty parts, perform Clear Memory Mode <Ref. to EN(H6DO)(diag)-57, OPERATION, Clear Memory Mode.>, and Inspection Mode <Ref. to EN(H6DO)(diag)-44, PROCEDURE, Inspection Mode.>.

WIRING DIAGRAM:

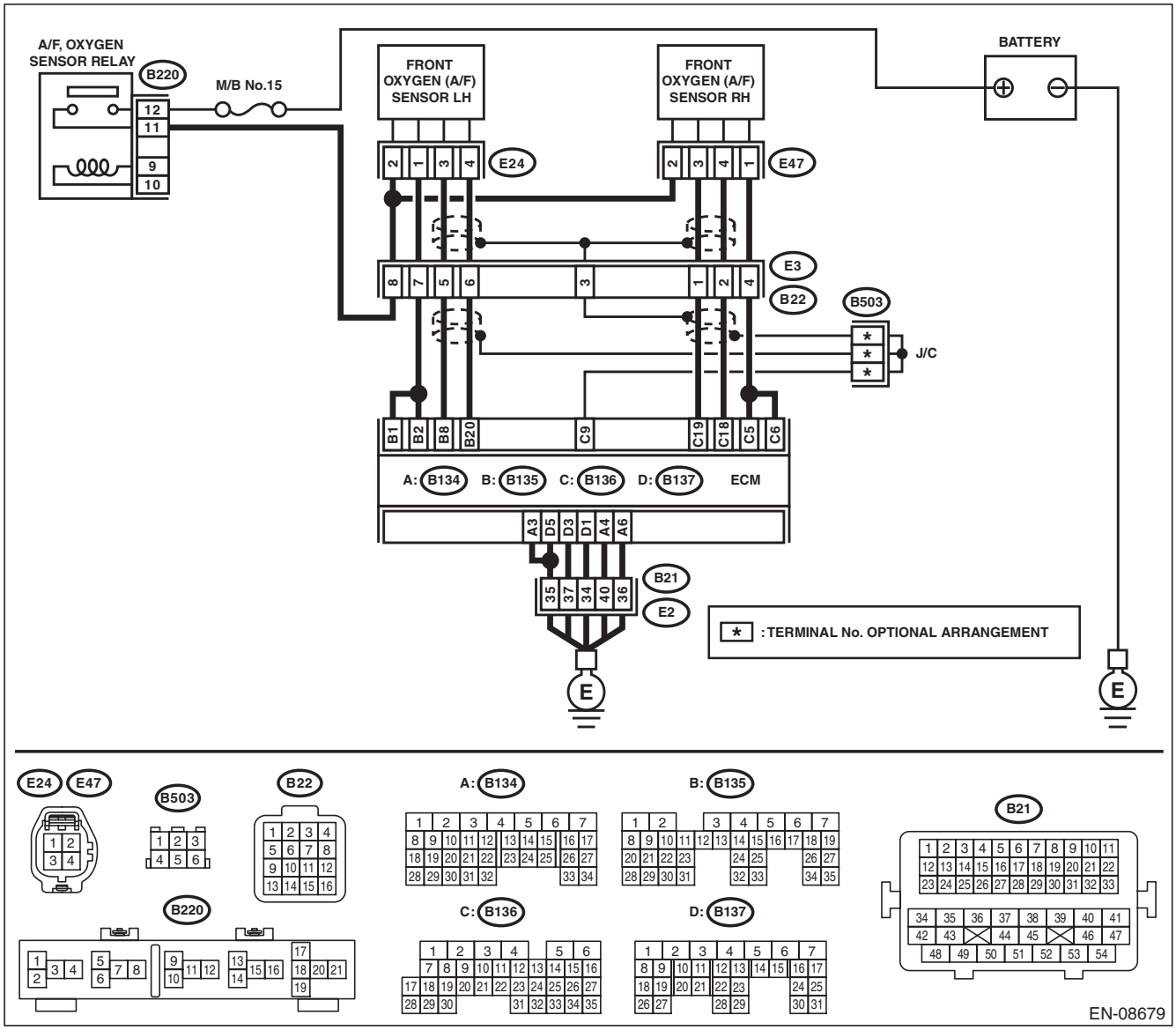

GETTHEMANUALS.org

	Step	Check	Yes	No
1	**CHECK POWER SUPPLY TO FRONT OXYGEN (A/F) SENSOR.** 1) Turn the ignition switch to OFF. 2) Disconnect the connectors from front oxygen (A/F) sensor. 3) Turn the ignition switch to ON. 4) Measure the voltage between front oxygen (A/F) sensor connector and engine ground. ***Connector & terminal*** ***(E24) No. 2 (+) — Engine ground (–):***	Is the voltage 10 V or more?	Go to step **2**.	Repair the power supply line. NOTE: In this case, repair the following item: • Open circuit in harness between A/F, oxygen sensor relay and front oxygen (A/F) sensor connector • Poor contact of A/F, oxygen sensor relay connector • Poor contact of coupling connector • Malfunction of A/F, oxygen sensor relay
2	**CHECK HARNESS BETWEEN ECM AND FRONT OXYGEN (A/F) SENSOR CONNECTOR.** 1) Turn the ignition switch to OFF. 2) Disconnect the connectors from ECM. 3) Measure the resistance between ECM and front oxygen (A/F) sensor connector. ***Connector & terminal*** ***(B135) No. 1 — (E24) No. 1:*** ***(B135) No. 2 — (E24) No. 1:***	Is the resistance less than 1 Ω?	Go to step **3**.	Repair the harness and connector. NOTE: In this case, repair the following item: • Open circuit in harness between ECM and front oxygen (A/F) sensor connector • Poor contact of coupling connector
3	**CHECK GROUND CIRCUIT FOR ECM.** Measure the resistance of harness between ECM and chassis ground. ***Connector & terminal*** ***(B134) No. 3 — Chassis ground:*** ***(B134) No. 4 — Chassis ground:*** ***(B134) No. 6 — Chassis ground:*** ***(B137) No. 1 — Chassis ground:*** ***(B137) No. 3 — Chassis ground:*** ***(B137) No. 5 — Chassis ground:***	Is the resistance less than 5 Ω?	Go to step **4**.	Repair the harness and connector. NOTE: In this case, repair the following item: • Open circuit of harness between ECM and engine ground • Poor contact of coupling connector
4	**CHECK FRONT OXYGEN (A/F) SENSOR.** Measure the resistance between front oxygen (A/F) sensor connector terminals. ***Terminals*** ***No. 2 — No. 1:***	Is the resistance 2 — 3 Ω?	Repair the poor contact of ECM connector.	Replace the front oxygen (A/F) sensor. <Ref. to FU(H6DO)-50, Front Oxygen (A/F) Sensor.>

GETtheMANUALS.org

P: DTC P0052 HO2S HEATER CONTROL CIRCUIT HIGH (BANK 2 SENSOR 1)

DTC DETECTING CONDITION:

- Immediately at fault recognition
- GENERAL DESCRIPTION <Ref. to GD(H6DO)-30, DTC P0052 HO2S HEATER CONTROL CIRCUIT HIGH (BANK 2 SENSOR 1), Diagnostic Trouble Code (DTC) Detecting Criteria.>

CAUTION:

After servicing or replacing faulty parts, perform Clear Memory Mode <Ref. to EN(H6DO)(diag)-57, OPERATION, Clear Memory Mode.>, and Inspection Mode <Ref. to EN(H6DO)(diag)-44, PROCEDURE, Inspection Mode.>.

WIRING DIAGRAM:

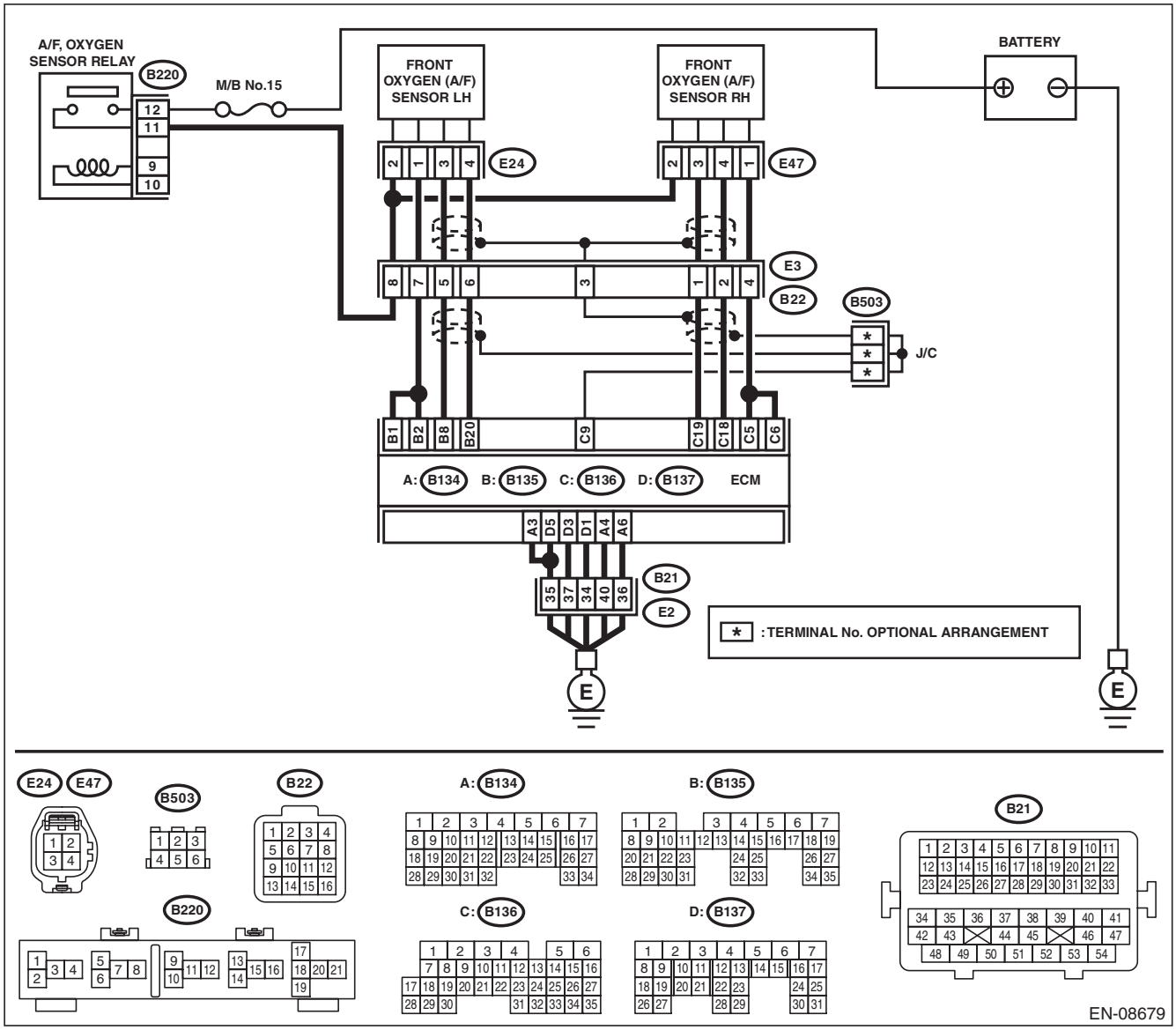

GETTHEMANUALS.org

Step		Check	Yes	No
1	**CHECK HARNESS BETWEEN ECM AND FRONT OXYGEN (A/F) SENSOR CONNECTOR.** 1) Turn the ignition switch to OFF. 2) Measure the voltage between ECM and chassis ground. ***Connector & terminal*** ***(B135) No. 1 (+) — Chassis ground (–):*** ***(B135) No. 2 (+) — Chassis ground (–):***	Is the voltage 10 V or more?	Repair the short circuit to power in the harness between ECM and front oxygen (A/F) sensor connector.	Go to step **2**.
2	**CHECK GROUND CIRCUIT FOR ECM.** 1) Disconnect the connectors from ECM. 2) Measure the resistance between ECM and chassis ground. ***Connector & terminal*** ***(B134) No. 3 — Chassis ground:*** ***(B134) No. 4 — Chassis ground:*** ***(B134) No. 6 — Chassis ground:*** ***(B137) No. 1 — Chassis ground:*** ***(B137) No. 3 — Chassis ground:*** ***(B137) No. 5 — Chassis ground:***	Is the resistance less than 5 Ω?	Repair the poor contact of ECM connector.	Repair the harness and connector. NOTE: In this case, repair the following item: • Open circuit of harness between ECM and engine ground • Poor contact of coupling connector

GETTHEMANUALS.org

Q: DTC P0057 HO2S HEATER CONTROL CIRCUIT LOW (BANK 2 SENSOR 2)

DTC DETECTING CONDITION:

- Detected when two consecutive driving cycles with fault occur.
- GENERAL DESCRIPTION <Ref. to GD(H6DO)-30, DTC P0057 HO2S HEATER CONTROL CIRCUIT LOW (BANK 2 SENSOR 2), Diagnostic Trouble Code (DTC) Detecting Criteria.>

CAUTION:

After servicing or replacing faulty parts, perform Clear Memory Mode <Ref. to EN(H6DO)(diag)-57, OPERATION, Clear Memory Mode.>, and Inspection Mode <Ref. to EN(H6DO)(diag)-44, PROCEDURE, Inspection Mode.>.

WIRING DIAGRAM:

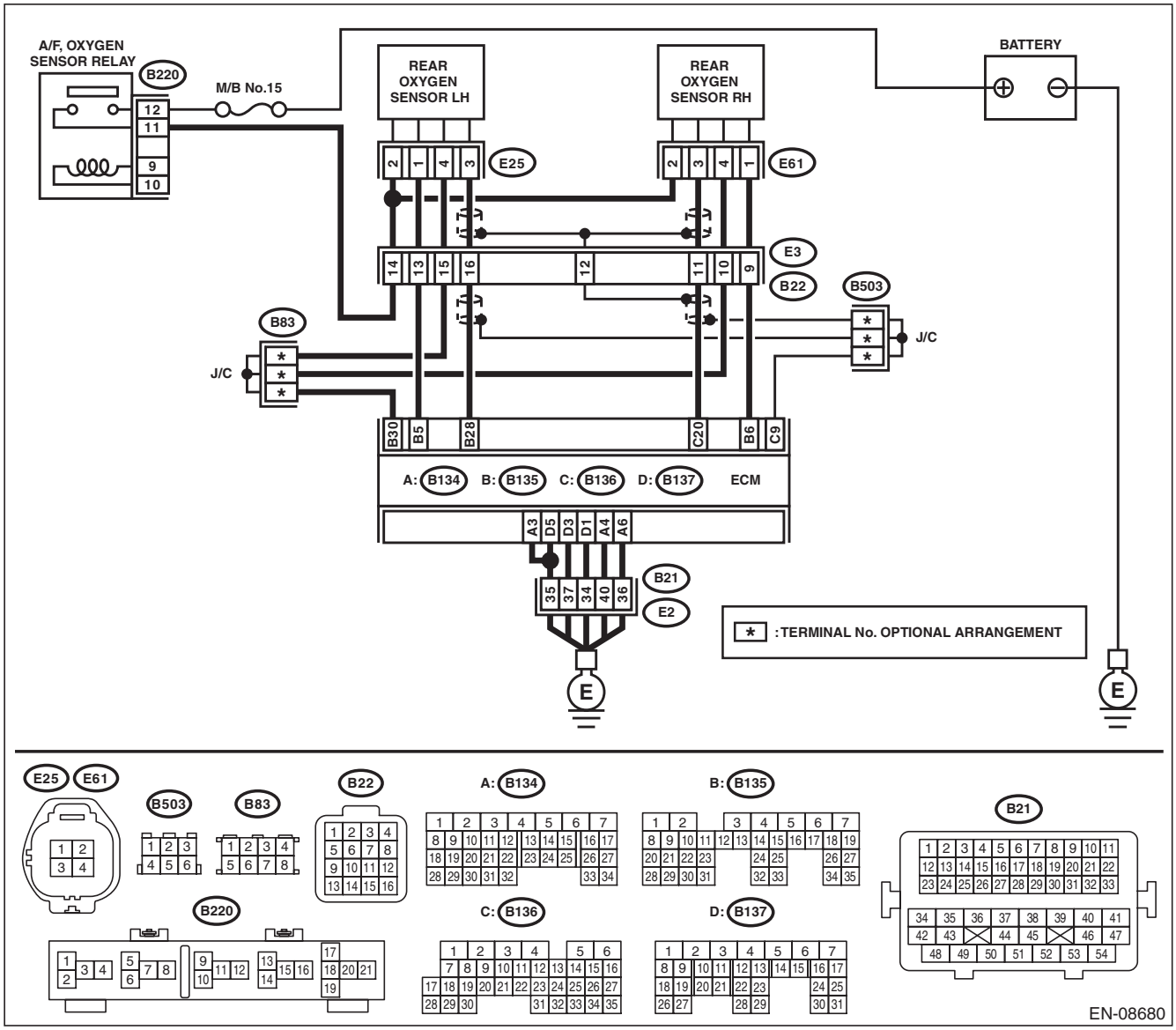

GETTHEMANUALS.org

	Step	Check	Yes	No
1	**CHECK POWER SUPPLY TO REAR OXYGEN SENSOR.** 1) Turn the ignition switch to OFF. 2) Disconnect the connector from rear oxygen sensor. 3) Turn the ignition switch to ON. 4) Measure the voltage between rear oxygen sensor connector and engine ground. ***Connector & terminal*** ***(E25) No. 2 (+) — Engine ground (–):***	Is the voltage 10 V or more?	Go to step **2**.	Repair the power supply line. NOTE: In this case, repair the following item: • Open circuit in harness between A/F, oxygen sensor relay and rear oxygen sensor connector • Poor contact of A/F, oxygen sensor relay connector • Poor contact of coupling connector • Malfunction of A/F, oxygen sensor relay
2	**CHECK HARNESS BETWEEN ECM AND REAR OXYGEN SENSOR CONNECTOR.** 1) Turn the ignition switch to OFF. 2) Disconnect the connector from ECM. 3) Measure the resistance between ECM and oxygen sensor connector. ***Connector & terminal*** ***(B135) No. 5 — (E25) No. 1:***	Is the resistance less than 1 Ω?	Go to step **3**.	Repair the harness and connector. NOTE: In this case, repair the following item: • Open circuit in harness between ECM and rear oxygen sensor connector • Poor contact of coupling connector
3	**CHECK GROUND CIRCUIT FOR ECM.** Measure the resistance of harness between ECM and chassis ground. ***Connector & terminal*** ***(B134) No. 3 — Chassis ground:*** ***(B134) No. 4 — Chassis ground:*** ***(B134) No. 6 — Chassis ground:*** ***(B137) No. 1 — Chassis ground:*** ***(B137) No. 3 — Chassis ground:*** ***(B137) No. 5 — Chassis ground:***	Is the resistance less than 5 Ω?	Go to step **4**.	Repair the harness and connector. NOTE: In this case, repair the following item: • Open circuit of harness between ECM and engine ground • Poor contact of coupling connector
4	**CHECK REAR OXYGEN SENSOR.** Measure the resistance between rear oxygen sensor connector terminals. ***Terminals*** ***No. 2 — No. 1:***	Is the resistance 5 — 7 Ω?	Repair the poor contact of ECM connector.	Replace the rear oxygen sensor. <Ref. to FU(H6DO)-52, Rear Oxygen Sensor.>

GETthemMANUALS.org

R: DTC P0058 HO2S HEATER CONTROL CIRCUIT HIGH (BANK 2 SENSOR 2)

DTC DETECTING CONDITION:

- Detected when two consecutive driving cycles with fault occur.
- GENERAL DESCRIPTION <Ref. to GD(H6DO)-30, DTC P0058 HO2S HEATER CONTROL CIRCUIT HIGH (BANK 2 SENSOR 2), Diagnostic Trouble Code (DTC) Detecting Criteria.>

CAUTION:

After servicing or replacing faulty parts, perform Clear Memory Mode <Ref. to EN(H6DO)(diag)-57, OPERATION, Clear Memory Mode.>, and Inspection Mode <Ref. to EN(H6DO)(diag)-44, PROCEDURE, Inspection Mode.>.

WIRING DIAGRAM:

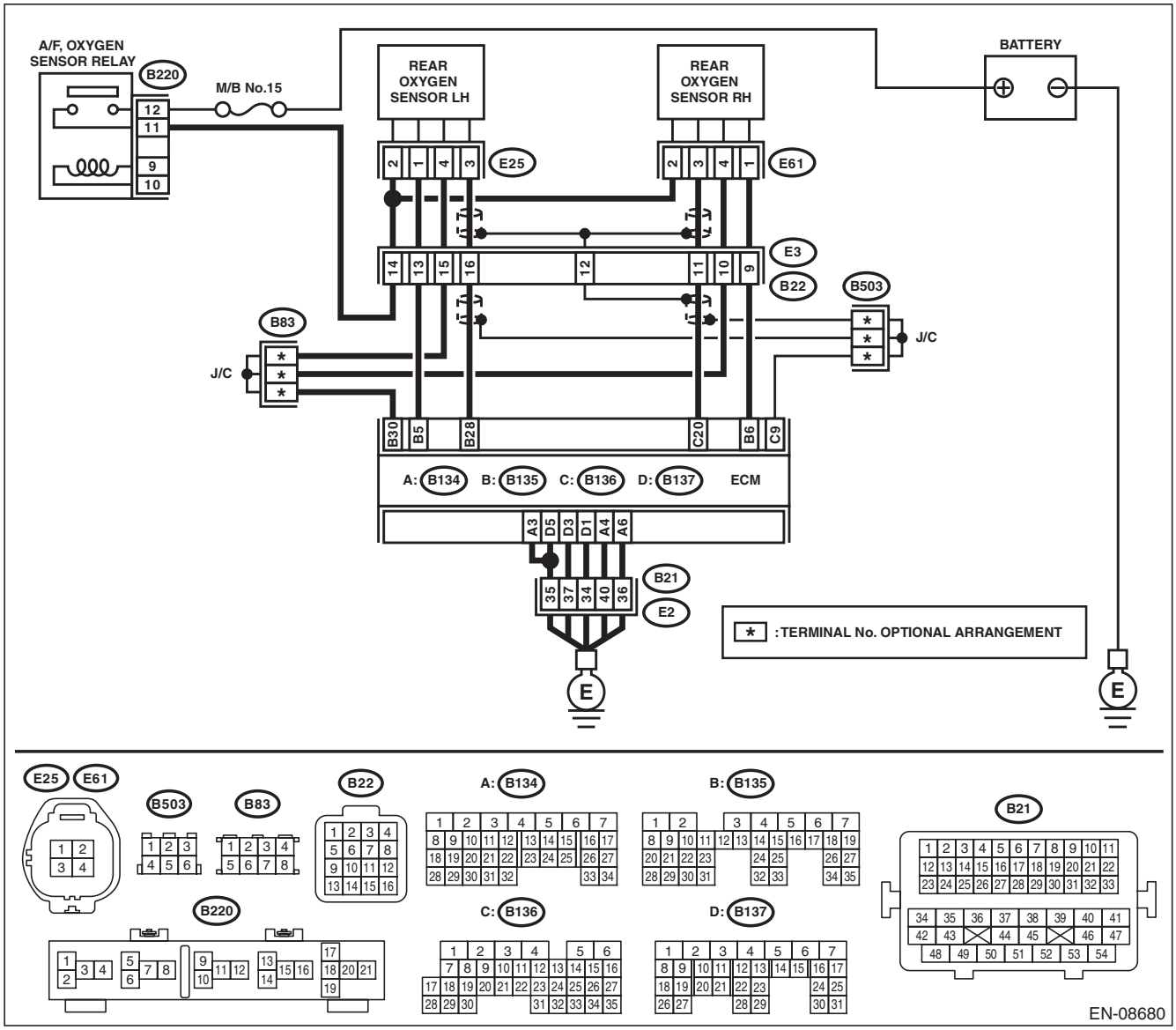

Step		Check	Yes	No
1	**CHECK HARNESS BETWEEN ECM AND REAR OXYGEN SENSOR CONNECTOR.** 1) Turn the ignition switch to OFF. 2) Measure the voltage between ECM and chassis ground. ***Connector & terminal*** ***(B135) No. 5 (+) — Chassis ground (–):***	Is the voltage 10 V or more?	Repair the short circuit to power in the harness between ECM and rear oxygen sensor connector.	Go to step **2**.

GETtheMANUALS.org

Step		Check	Yes	No
2	**CHECK GROUND CIRCUIT FOR ECM.** 1) Disconnect the connector from ECM. 2) Measure the resistance between ECM and chassis ground. ***Connector & terminal*** ***(B134) No. 3 — Chassis ground:*** ***(B134) No. 4 — Chassis ground:*** ***(B134) No. 6 — Chassis ground:*** ***(B137) No. 1 — Chassis ground:*** ***(B137) No. 3 — Chassis ground:*** ***(B137) No. 5 — Chassis ground:***	Is the resistance less than 5 Ω?	Repair the poor contact of ECM connector.	Repair the harness and connector. NOTE: In this case, repair the following item: • Open circuit of harness between ECM and engine ground • Poor contact of coupling connector

GETTHEMANUALS.org

S: DTC P0068 MAP/MAF - THROTTLE POSITION CORRELATION

DTC DETECTING CONDITION:

- Detected when two consecutive driving cycles with fault occur.
- GENERAL DESCRIPTION <Ref. to GD(H6DO)-31, DTC P0068 MAP/MAF - THROTTLE POSITION CORRELATION, Diagnostic Trouble Code (DTC) Detecting Criteria.>

CAUTION:

After servicing or replacing faulty parts, perform Clear Memory Mode <Ref. to EN(H6DO)(diag)-57, OPERATION, Clear Memory Mode.>, and Inspection Mode <Ref. to EN(H6DO)(diag)-44, PROCEDURE, Inspection Mode.>.

Step		Check	Yes	No
1	**CHECK AIR INTAKE SYSTEM.**	Are there holes, loose bolts or disconnection of hose on air intake system?	Repair the air intake system.	Go to step **2**.
2	**CHECK MANIFOLD ABSOLUTE PRESSURE SENSOR.** 1) Start the engine and warm up engine until coolant temperature is higher than 75°C (167°F). 2) Place the select lever in “P” range or “N” range. 3) Turn the A/C switch to OFF. 4) Turn all the accessory switches to OFF. 5) Read the value of «Mani. Absolute Pressure» using the Subaru Select Monitor or a general scan tool. NOTE: • Subaru Select Monitor For detailed operation procedures, refer to “READ CURRENT DATA FOR ENGINE”. <Ref. to EN(H6DO)(diag)-35, Subaru Select Monitor.> • General scan tool For detailed operation procedures, refer to the “General Scan Tool Instruction Manual”.	Is the value in «Mani. Absolute Pressure» 73.3 — 106.6 kPa (550 — 800 mmHg, 21.65 — 31.50 inHg) when the ignition is turned ON, and 20.0 — 46.7 kPa (150 — 350 mmHg, 5.91 — 13.78 inHg) during idling?	Go to step **3**.	Replace the manifold absolute pressure sensor. <Ref. to FU(H6DO)-39, Manifold Absolute Pressure Sensor.>
3	**CHECK THROTTLE OPENING ANGLE.** Using the Subaru Select Monitor or a general scan tool, read the value in «Throttle Opening Angle». NOTE: • Subaru Select Monitor For detailed operation procedures, refer to “READ CURRENT DATA FOR ENGINE”. <Ref. to EN(H6DO)(diag)-35, Subaru Select Monitor.> • General scan tool For detailed operation procedures, refer to the “General Scan Tool Instruction Manual”.	Is the value in «Throttle Opening Angle» with the throttle fully closed less than 5%?	Go to step **4**.	Replace the electronic throttle control. <Ref. to FU(H6DO)-19, Throttle Body.>
4	**CHECK THROTTLE OPENING ANGLE.**	Is the value in «Throttle Opening Angle» with the throttle fully open 85% or more?	Replace the manifold absolute pressure sensor. <Ref. to FU(H6DO)-39, Manifold Absolute Pressure Sensor.>	Replace the electronic throttle control. <Ref. to FU(H6DO)-19, Throttle Body.>

GETthemMANUALS.org

T: DTC P0101 MASS OR VOLUME AIR FLOW CIRCUIT RANGE/PERFORMANCE

DTC DETECTING CONDITION:
- Detected when two consecutive driving cycles with fault occur.
- GENERAL DESCRIPTION <Ref. to GD(H6DO)-33, DTC P0101 MASS OR VOLUME AIR FLOW CIRCUIT RANGE/PERFORMANCE, Diagnostic Trouble Code (DTC) Detecting Criteria.>

TROUBLE SYMPTOM:
- Improper idling
- Engine stalls.
- Poor driving performance

CAUTION:
After servicing or replacing faulty parts, perform Clear Memory Mode <Ref. to EN(H6DO)(diag)-57, OPERATION, Clear Memory Mode.>, and Inspection Mode <Ref. to EN(H6DO)(diag)-44, PROCEDURE, Inspection Mode.>.

Step	Check	Yes	No
1 **CHECK FOR ANY OTHER DTC ON DISPLAY.**	Is any other DTC displayed?	Check the appropriate DTC using the “List of Diagnostic Trouble Code (DTC)”. <Ref. to EN(H6DO)(diag)-85, List of Diagnostic Trouble Code (DTC).>	Replace the mass air flow and intake air temperature sensor. <Ref. to FU(H6DO)-41, Mass Air Flow and Intake Air Temperature Sensor.>

GETTHEMANUALS.org

U: DTC P0102 MASS OR VOLUME AIR FLOW CIRCUIT LOW INPUT

DTC DETECTING CONDITION:

- Immediately at fault recognition
- GENERAL DESCRIPTION <Ref. to GD(H6DO)-35, DTC P0102 MASS OR VOLUME AIR FLOW CIRCUIT LOW INPUT, Diagnostic Trouble Code (DTC) Detecting Criteria.>

TROUBLE SYMPTOM:

- Improper idling
- Engine stalls.
- Poor driving performance

CAUTION:

After servicing or replacing faulty parts, perform Clear Memory Mode <Ref. to EN(H6DO)(diag)-57, OPERATION, Clear Memory Mode.>, and Inspection Mode <Ref. to EN(H6DO)(diag)-44, PROCEDURE, Inspection Mode.>.

WIRING DIAGRAM:

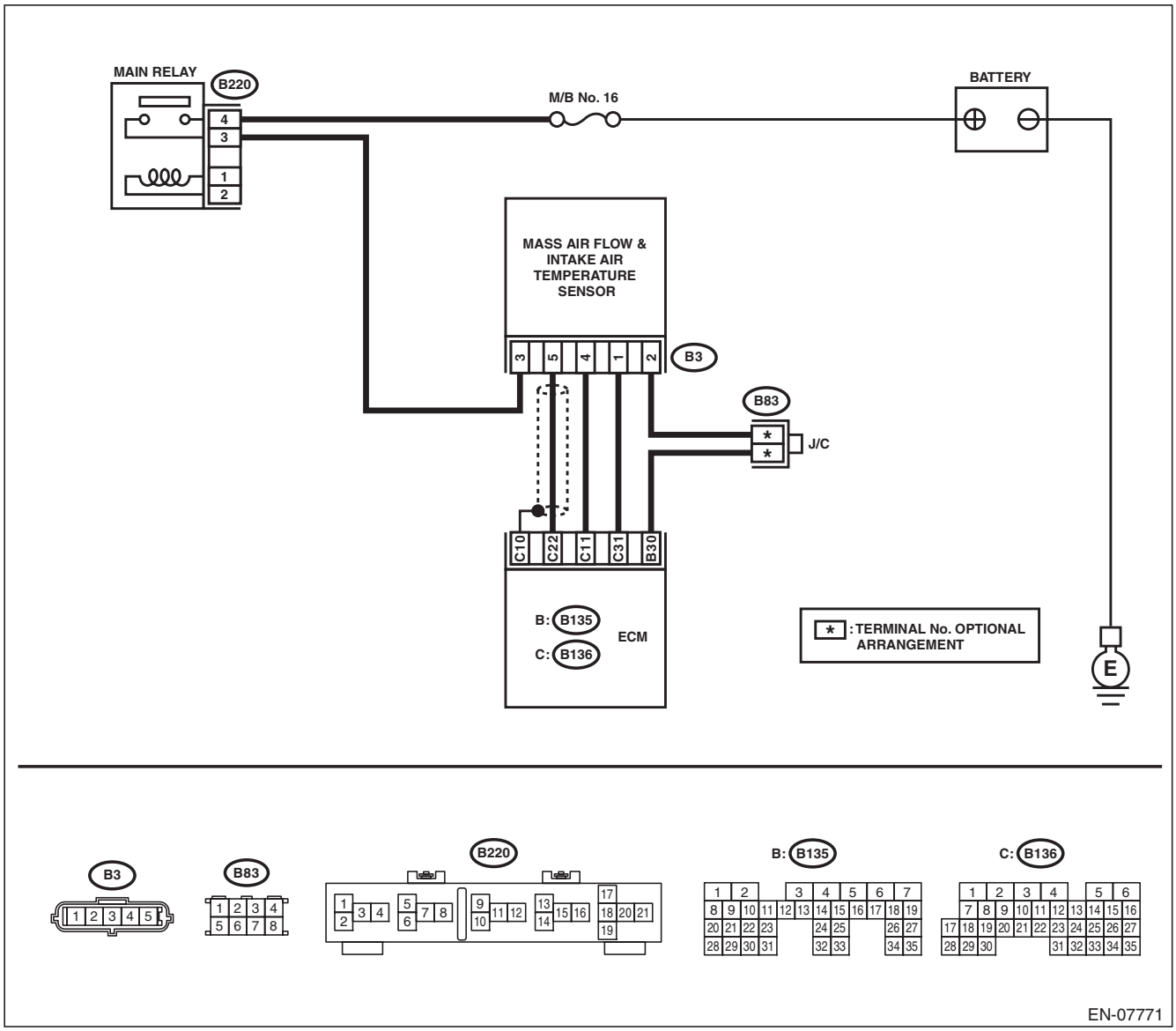

EN-07771

GETTHEMANUALS.org

	Step	Check	Yes	No
1	**CHECK CURRENT DATA.** 1) Start the engine. 2) Read the value of «Air Flow Sensor Voltage» using Subaru Select Monitor. NOTE: For detailed operation procedures, refer to "READ CURRENT DATA FOR ENGINE". <Ref. to EN(H6DO)(diag)-35, Subaru Select Monitor.>	Is the value of «Air Flow Sensor Voltage» less than 0.2 V?	Go to step **2**.	Even if DTC is detected, the circuit has returned to a normal condition at this time. Reproduce the failure, and then perform the diagnosis again. NOTE: In this case, temporary poor contact of connector, temporary open or short circuit of harness may be the cause.
2	**CHECK POWER SUPPLY OF MASS AIR FLOW AND INTAKE AIR TEMPERATURE SENSOR.** 1) Turn the ignition switch to OFF. 2) Disconnect the connectors from the mass air flow and intake air temperature sensor. 3) Turn the ignition switch to ON. 4) Measure the voltage between mass air flow and intake air temperature sensor connector and engine ground. ***Connector & terminal*** ***(B3) No. 3 (+) — Engine ground (–):***	Is the voltage 10 V or more?	Go to step **3**.	Repair the harness and connector. NOTE: In this case, repair the following item: • Open circuit in harness between main relay and mass air flow and intake air temperature sensor connector • Poor contact of main relay connector
3	**CHECK HARNESS BETWEEN ECM AND MASS AIR FLOW AND INTAKE AIR TEMPERATURE SENSOR CONNECTOR.** 1) Turn the ignition switch to OFF. 2) Disconnect the connector from ECM. 3) Measure the resistance of harness between ECM and the mass air flow and intake air temperature sensor connector. ***Connector & terminal*** ***(B136) No. 22 — (B3) No. 5:***	Is the resistance less than 1 Ω?	Go to step **4**.	Repair the open circuit in harness between ECM and the mass air flow and intake air temperature sensor connector.
4	**CHECK HARNESS BETWEEN ECM AND MASS AIR FLOW AND INTAKE AIR TEMPERATURE SENSOR CONNECTOR.** Measure the resistance between ECM and chassis ground. ***Connector & terminal*** ***(B136) No. 22 — Chassis ground:***	Is the resistance 1 MΩ or more?	Go to step **5**.	Repair the short circuit to ground in harness between ECM and mass air flow and intake air temperature sensor connector.
5	**CHECK FOR POOR CONTACT.** Check for poor contact of ECM and mass air flow and intake air temperature sensor connector.	Is there poor contact of ECM or mass air flow and intake air temperature sensor connector?	Repair the poor contact of ECM or mass air flow and intake air temperature sensor connector.	Replace the mass air flow and intake air temperature sensor. <Ref. to FU(H6DO)-41, Mass Air Flow and Intake Air Temperature Sensor.>

GETthemMANUALS.org

V: DTC P0103 MASS OR VOLUME AIR FLOW CIRCUIT HIGH INPUT

DTC DETECTING CONDITION:

- Immediately at fault recognition
- GENERAL DESCRIPTION <Ref. to GD(H6DO)-37, DTC P0103 MASS OR VOLUME AIR FLOW CIRCUIT HIGH INPUT, Diagnostic Trouble Code (DTC) Detecting Criteria.>

TROUBLE SYMPTOM:

- Improper idling
- Engine stalls.
- Poor driving performance

CAUTION:

After servicing or replacing faulty parts, perform Clear Memory Mode <Ref. to EN(H6DO)(diag)-57, OPERATION, Clear Memory Mode.>, and Inspection Mode <Ref. to EN(H6DO)(diag)-44, PROCEDURE, Inspection Mode.>.

WIRING DIAGRAM:

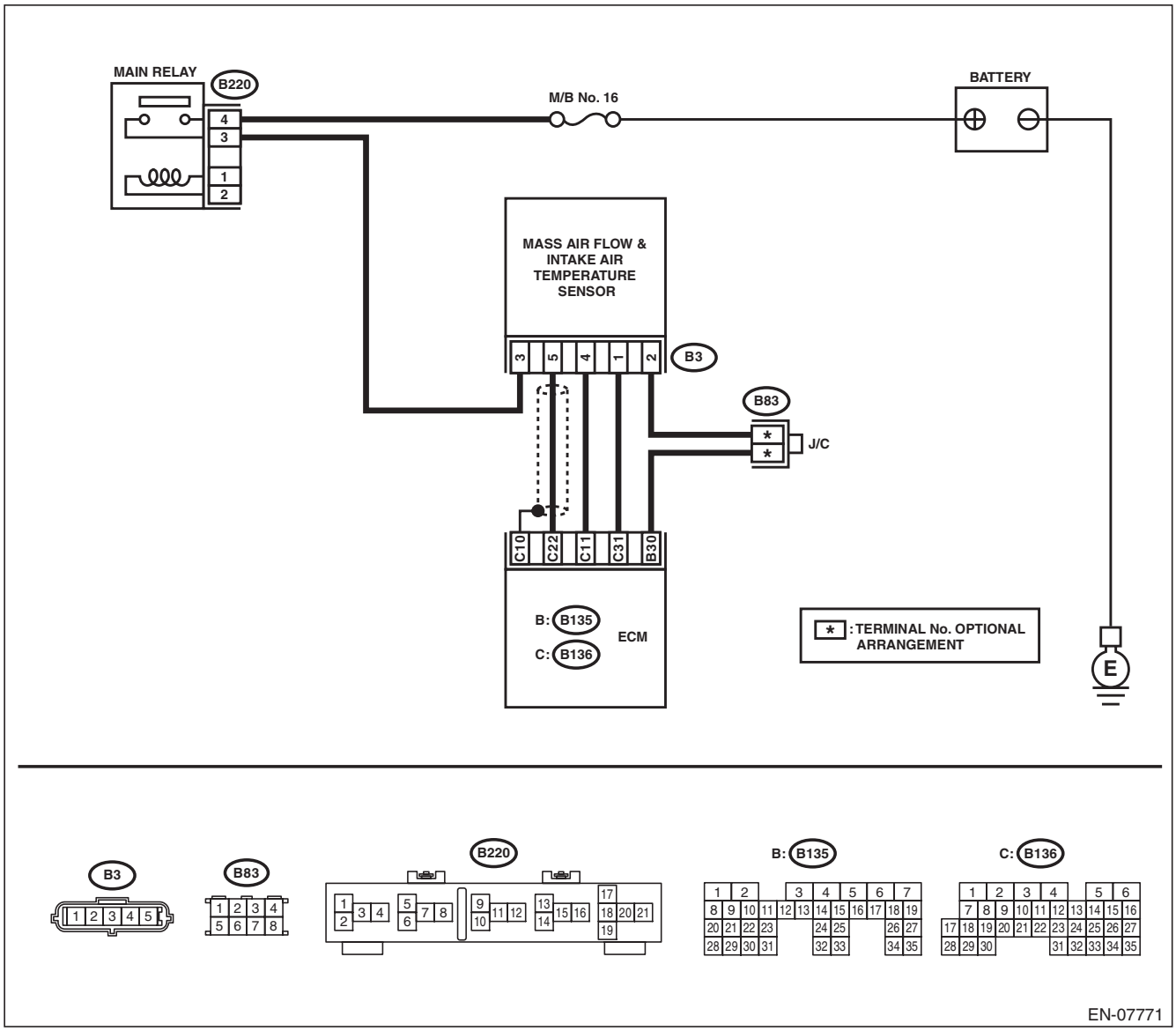

GETTHEMANUALS.org

	Step	Check	Yes	No
1	**CHECK CURRENT DATA.** 1) Start the engine. 2) Read the value of «Air Flow Sensor Voltage» using Subaru Select Monitor. NOTE: For detailed operation procedures, refer to "READ CURRENT DATA FOR ENGINE". <Ref. to EN(H6DO)(diag)-35, Subaru Select Monitor.>	Is the value of «Air Flow Sensor Voltage» 5 V or more?	Go to step **2**.	Even if DTC is detected, the circuit has returned to a normal condition at this time. Reproduce the failure, and then perform the diagnosis again. NOTE: In this case, temporary poor contact of connector, temporary open or short circuit of harness may be the cause.
2	**CHECK HARNESS BETWEEN ECM AND MASS AIR FLOW AND INTAKE AIR TEMPERATURE SENSOR CONNECTOR.** 1) Turn the ignition switch to OFF. 2) Disconnect the connectors from the mass air flow and intake air temperature sensor. 3) Start the engine. 4) Read the value of «Air Flow Sensor Voltage» using Subaru Select Monitor. NOTE: For detailed operation procedures, refer to "READ CURRENT DATA FOR ENGINE". <Ref. to EN(H6DO)(diag)-35, Subaru Select Monitor.>	Is the value of «Air Flow Sensor Voltage» 5 V or more?	Repair the short circuit of harness to power supply between ECM and mass air flow and intake air temperature sensor connector.	Go to step **3**.
3	**CHECK HARNESS BETWEEN ECM AND MASS AIR FLOW AND INTAKE AIR TEMPERATURE SENSOR CONNECTOR.** 1) Turn the ignition switch to OFF. 2) Measure the resistance of harness between mass air flow and intake air temperature sensor connector and engine ground. ***Connector & terminal*** ***(B3) No. 4 — Engine ground:***	Is the resistance less than 5 Ω?	Go to step **4**.	Repair the harness and connector. NOTE: In this case, repair the following item: • Open circuit in harness between ECM and mass air flow and intake air temperature sensor connector • Poor contact of ECM connector
4	**CHECK FOR POOR CONTACT.** Check for poor contact of mass air flow and intake air temperature sensor connector.	Is there poor contact of mass air flow and intake air temperature sensor connector?	Repair the poor contact of mass air flow and intake air temperature sensor connector.	Replace the mass air flow and intake air temperature sensor. <Ref. to FU(H6DO)-41, Mass Air Flow and Intake Air Temperature Sensor.>

GETthemMANUALS.org

W: DTC P0107 MANIFOLD ABSOLUTE PRESSURE/BAROMETRIC PRESSURE CIRCUIT LOW INPUT

DTC DETECTING CONDITION:

- Immediately at fault recognition
- GENERAL DESCRIPTION <Ref. to GD(H6DO)-39, DTC P0107 MANIFOLD ABSOLUTE PRESSURE/ BAROMETRIC PRESSURE CIRCUIT LOW INPUT, Diagnostic Trouble Code (DTC) Detecting Criteria.>

CAUTION:

After servicing or replacing faulty parts, perform Clear Memory Mode <Ref. to EN(H6DO)(diag)-57, OPERATION, Clear Memory Mode.>, and Inspection Mode <Ref. to EN(H6DO)(diag)-44, PROCEDURE, Inspection Mode.>.

WIRING DIAGRAM:

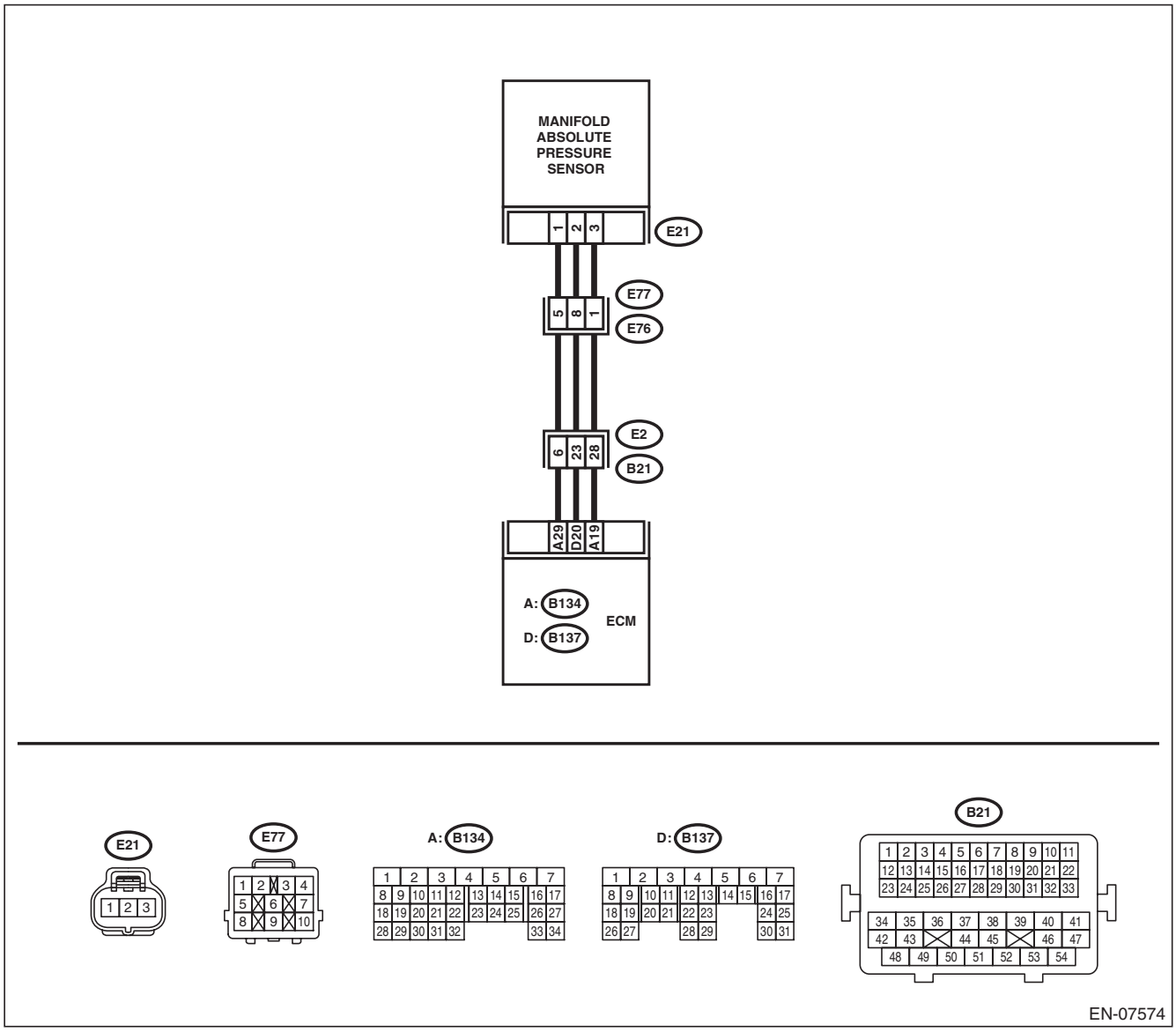

GETTHEMANUALS.org

	Step	Check	Yes	No
1	**CHECK CURRENT DATA.** 1) Start the engine. 2) Using the Subaru Select Monitor, read the value in «Mani. Absolute Pressure». NOTE: • Subaru Select Monitor For detailed operation procedures, refer to "READ CURRENT DATA FOR ENGINE". <Ref. to EN(H6DO)(diag)-35, Subaru Select Monitor.> • General scan tool For detailed operation procedures, refer to the general scan tool operation manual.	Is the value of «Mani. Absolute Pressure» less than 13.3 kPa (100 mmHg, 3.94 inHg)?	Go to step **2**.	Even if DTC is detected, the circuit has returned to a normal condition at this time. Reproduce the failure, and then perform the diagnosis again. NOTE: In this case, temporary poor contact of connector, temporary open or short circuit of harness may be the cause.
2	**CHECK POWER SUPPLY OF MANIFOLD ABSOLUTE PRESSURE SENSOR.** 1) Turn the ignition switch to OFF. 2) Disconnect the connector from manifold absolute pressure sensor. 3) Turn the ignition switch to ON. 4) Measure the voltage between manifold absolute pressure sensor connector and engine ground. ***Connector & terminal*** ***(E21) No. 3 (+) — Engine ground (–):***	Is the voltage 4.5 V or more?	Go to step **3**.	Repair the harness and connector. NOTE: In this case, repair the following item: • Open circuit of harness between ECM and manifold absolute pressure sensor connector. • Poor contact of ECM connector • Poor contact of coupling connector
3	**CHECK HARNESS BETWEEN ECM AND MANIFOLD ABSOLUTE PRESSURE SENSOR CONNECTOR.** 1) Turn the ignition switch to OFF. 2) Disconnect the connector from ECM. 3) Measure the resistance of harness between ECM and manifold absolute pressure sensor connector. ***Connector & terminal*** ***(B137) No. 20 — (E21) No. 2:***	Is the resistance less than 1 Ω?	Go to step **4**.	Repair the harness and connector. NOTE: In this case, repair the following item: • Open circuit of harness between ECM and manifold absolute pressure sensor connector. • Poor contact of coupling connector
4	**CHECK HARNESS BETWEEN ECM AND MANIFOLD ABSOLUTE PRESSURE SENSOR CONNECTOR.** Measure the resistance between ECM and chassis ground. ***Connector & terminal*** ***(B137) No. 20 — Chassis ground:***	Is the resistance 1 MΩ or more?	Go to step **5**.	Repair ground short circuit of harness between ECM and manifold absolute pressure sensor connector.
5	**CHECK FOR POOR CONTACT.** Check for poor contact of ECM and manifold absolute pressure sensor connector.	Is there poor contact of ECM or manifold absolute pressure sensor connector?	Repair the poor contact of ECM or manifold absolute pressure sensor connector.	Replace the manifold absolute pressure sensor. <Ref. to FU(H6DO)-39, Manifold Absolute Pressure Sensor.>

GETthemMANUALS.org

X: DTC P0108 MANIFOLD ABSOLUTE PRESSURE/BAROMETRIC PRESSURE CIRCUIT HIGH INPUT

DTC DETECTING CONDITION:

- Immediately at fault recognition
- GENERAL DESCRIPTION <Ref. to GD(H6DO)-41, DTC P0108 MANIFOLD ABSOLUTE PRESSURE/ BAROMETRIC PRESSURE CIRCUIT HIGH INPUT, Diagnostic Trouble Code (DTC) Detecting Criteria.>

CAUTION:

After servicing or replacing faulty parts, perform Clear Memory Mode <Ref. to EN(H6DO)(diag)-57, OPERATION, Clear Memory Mode.>, and Inspection Mode <Ref. to EN(H6DO)(diag)-44, PROCEDURE, Inspection Mode.>.

WIRING DIAGRAM:

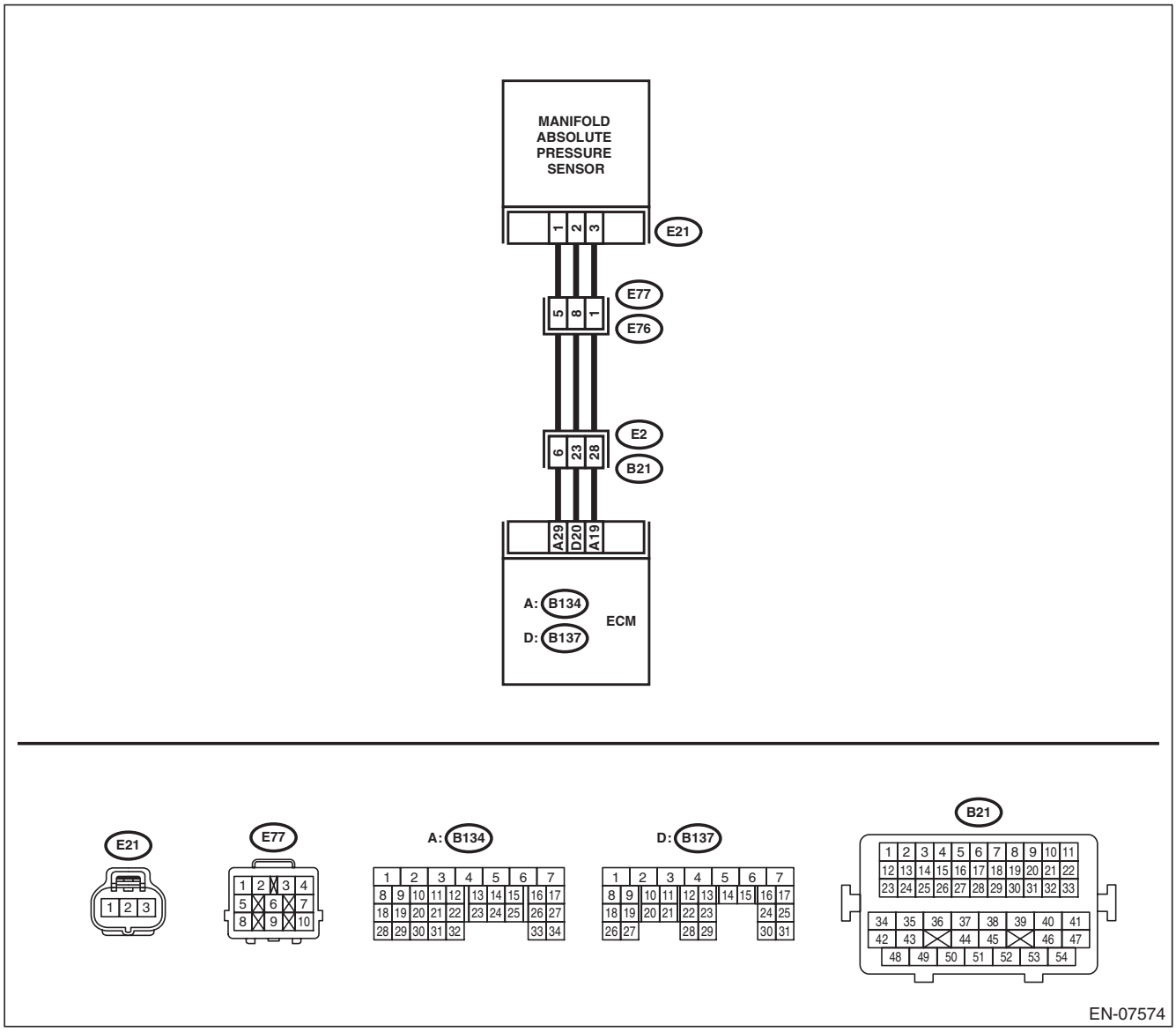

GETTHEMANUALS.org

	Step	Check	Yes	No
1	**CHECK CURRENT DATA.** 1) Start the engine. 2) Read the value of «Mani. Absolute Pressure» using the Subaru Select Monitor or a general scan tool. NOTE: • Subaru Select Monitor For detailed operation procedures, refer to "READ CURRENT DATA FOR ENGINE". <Ref. to EN(H6DO)(diag)-35, Subaru Select Monitor.> • General scan tool For detailed operation procedures, refer to the general scan tool operation manual.	Is the value of «Mani. Absolute Pressure» 119.5 kPa (896.5 mmHg, 35.29 inHg) or more?	Go to step **2**.	Even if DTC is detected, the circuit has returned to a normal condition at this time. Reproduce the failure, and then perform the diagnosis again. NOTE: In this case, temporary poor contact of connector, temporary open or short circuit of harness may be the cause.
2	**CHECK HARNESS BETWEEN ECM AND MANIFOLD ABSOLUTE PRESSURE SENSOR CONNECTOR.** 1) Turn the ignition switch to OFF. 2) Disconnect the connector from manifold absolute pressure sensor. 3) Start the engine. 4) Read the value of «Mani. Absolute Pressure» using the Subaru Select Monitor or a general scan tool. NOTE: • Subaru Select Monitor For detailed operation procedures, refer to "READ CURRENT DATA FOR ENGINE". <Ref. to EN(H6DO)(diag)-35, Subaru Select Monitor.> • General scan tool For detailed operation procedures, refer to the general scan tool operation manual.	Is the value of «Mani. Absolute Pressure» 119.5 kPa (896.5 mmHg, 35.29 inHg) or more?	Repair the short circuit to power in harness between ECM and manifold absolute pressure sensor connector.	Go to step **3**.
3	**CHECK HARNESS BETWEEN ECM AND MANIFOLD ABSOLUTE PRESSURE SENSOR CONNECTOR.** 1) Turn the ignition switch to OFF. 2) Measure the resistance of harness between manifold absolute pressure sensor connector and engine ground. ***Connector & terminal*** ***(E21) No. 1 — Engine ground:***	Is the resistance less than 5 Ω?	Go to step **4**.	Repair the harness and connector. NOTE: In this case, repair the following item: • Open circuit of harness between ECM and manifold absolute pressure sensor connector. • Poor contact of ECM connector • Poor contact of coupling connector
4	**CHECK FOR POOR CONTACT.** Check for poor contact of manifold absolute pressure sensor connector.	Is there poor contact of manifold absolute pressure sensor connector?	Repair the poor contact of manifold absolute pressure sensor connector.	Replace the manifold absolute pressure sensor. <Ref. to FU(H6DO)-39, Manifold Absolute Pressure Sensor.>

GETthemMANUALS.org

Y: DTC P0111 INTAKE AIR TEMPERATURE SENSOR 1 CIRCUIT RANGE/PERFORMANCE

DTC DETECTING CONDITION:

- Detected when two consecutive driving cycles with fault occur.
- GENERAL DESCRIPTION <Ref. to GD(H6DO)-43, DTC P0111 INTAKE AIR TEMPERATURE SENSOR 1 CIRCUIT RANGE/PERFORMANCE, Diagnostic Trouble Code (DTC) Detecting Criteria.>

TROUBLE SYMPTOM:

- Improper idling
- Poor driving performance

CAUTION:

After servicing or replacing faulty parts, perform Clear Memory Mode <Ref. to EN(H6DO)(diag)-57, OPERATION, Clear Memory Mode.>, and Inspection Mode <Ref. to EN(H6DO)(diag)-44, PROCEDURE, Inspection Mode.>.

	Step	Check	Yes	No
1	**CHECK ENGINE COOLANT TEMPERATURE.** 1) Start the engine and warm up completely. 2) Read the value of «Coolant Temp.» using the Subaru Select Monitor or a general scan tool. NOTE: • Subaru Select Monitor For detailed operation procedures, refer to “READ CURRENT DATA FOR ENGINE”. <Ref. to EN(H6DO)(diag)-35, Subaru Select Monitor.> • General scan tool For detailed operation procedures, refer to the general scan tool operation manual.	Is the value of «Coolant Temp.» 75°C (167°F) or more?	Replace the mass air flow and intake air temperature sensor. <Ref. to FU(H6DO)-41, Mass Air Flow and Intake Air Temperature Sensor.>	Check for DTC P0125. <Ref. to EN(H6DO)(diag)-146, DTC P0125 INSUFFICIENT COOLANT TEMPERATURE FOR CLOSED LOOP FUEL CONTROL, Diagnostic Procedure with Diagnostic Trouble Code (DTC).>

GETtheMANUALS.org

Z: DTC P0112 INTAKE AIR TEMPERATURE SENSOR 1 CIRCUIT LOW

DTC DETECTING CONDITION:

- Immediately at fault recognition
- GENERAL DESCRIPTION <Ref. to GD(H6DO)-46, DTC P0112 INTAKE AIR TEMPERATURE SENSOR 1 CIRCUIT LOW, Diagnostic Trouble Code (DTC) Detecting Criteria.>

TROUBLE SYMPTOM:

- Improper idling
- Poor driving performance

CAUTION:

After servicing or replacing faulty parts, perform Clear Memory Mode <Ref. to EN(H6DO)(diag)-57, OPERATION, Clear Memory Mode.>, and Inspection Mode <Ref. to EN(H6DO)(diag)-44, PROCEDURE, Inspection Mode.>.

WIRING DIAGRAM:

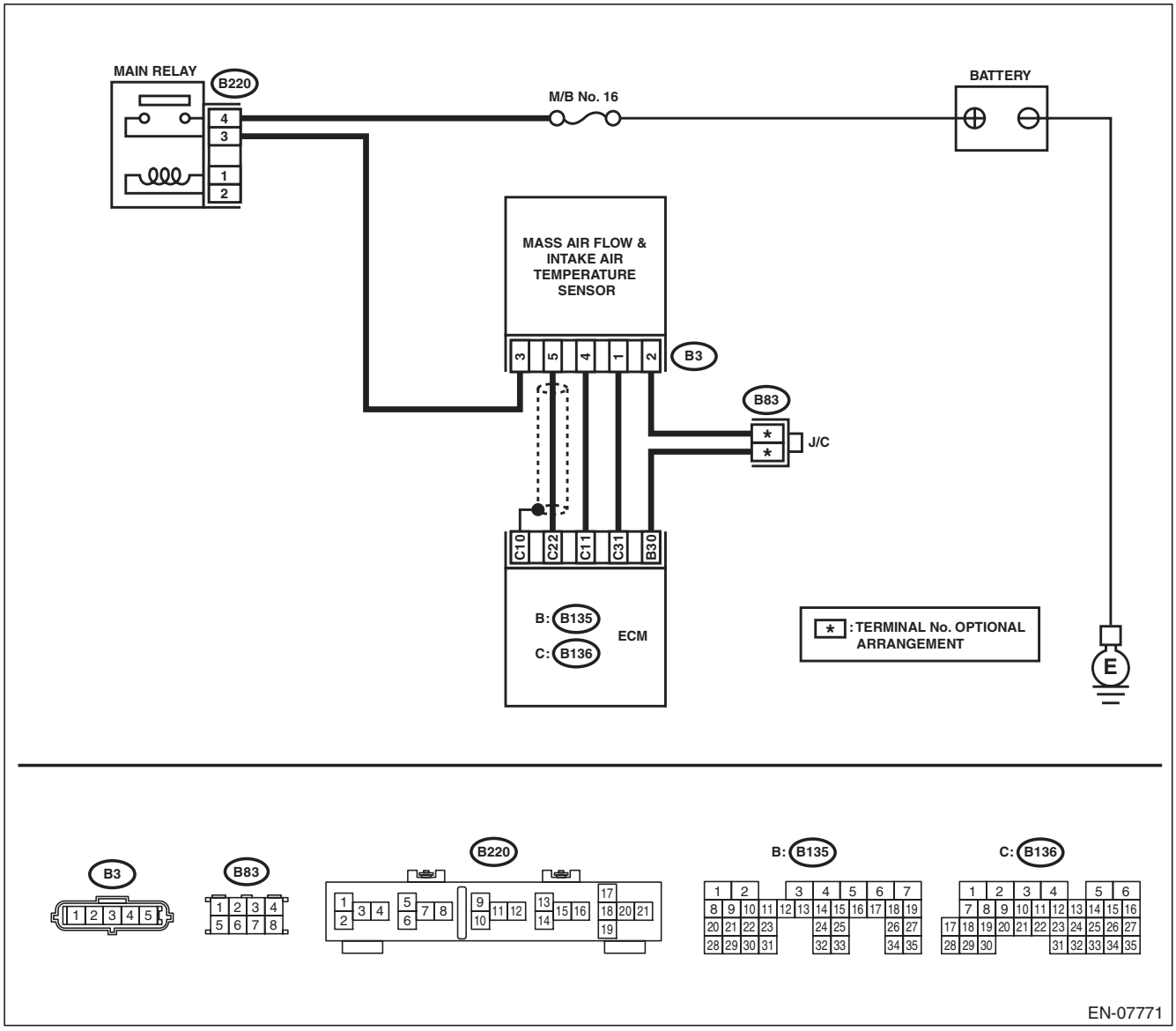

GETTHEMANUALS.org

	Step	Check	Yes	No
1	**CHECK CURRENT DATA.** 1) Start the engine. 2) Read the value of «Intake Air Temp.» using the Subaru Select Monitor or a general scan tool. NOTE: • Subaru Select Monitor For detailed operation procedures, refer to "READ CURRENT DATA FOR ENGINE". <Ref. to EN(H6DO)(diag)-35, Subaru Select Monitor.> • General scan tool For detailed operation procedures, refer to the general scan tool operation manual.	Is the value of «Intake Air Temp.» 120°C (248°F) or more?	Go to step **2**.	Even if DTC is detected, the circuit has returned to a normal condition at this time. Reproduce the failure, and then perform the diagnosis again. NOTE: In this case, temporary poor contact of connector, temporary open or short circuit of harness may be the cause.
2	**CHECK HARNESS BETWEEN ECM AND MASS AIR FLOW AND INTAKE AIR TEMPERATURE SENSOR CONNECTOR.** 1) Turn the ignition switch to OFF. 2) Disconnect the connector from ECM and the mass air flow and intake air temperature sensor. 3) Measure the resistance between ECM and chassis ground. ***Connector & terminal*** ***(B136) No. 31 — Chassis ground:***	Is the resistance 1 MΩ or more?	Replace the mass air flow and intake air temperature sensor. <Ref. to FU(H6DO)-41, Mass Air Flow and Intake Air Temperature Sensor.>	Repair the short circuit to ground in harness between ECM and mass air flow and intake air temperature sensor connector.

GETtheMANUALS.org

AA:DTC P0113 INTAKE AIR TEMPERATURE SENSOR 1 CIRCUIT HIGH

DTC DETECTING CONDITION:

- Immediately at fault recognition
- GENERAL DESCRIPTION <Ref. to GD(H6DO)-48, DTC P0113 INTAKE AIR TEMPERATURE SENSOR 1 CIRCUIT HIGH, Diagnostic Trouble Code (DTC) Detecting Criteria.>

TROUBLE SYMPTOM:

- Improper idling
- Poor driving performance

CAUTION:

After servicing or replacing faulty parts, perform Clear Memory Mode <Ref. to EN(H6DO)(diag)-57, OPERATION, Clear Memory Mode.>, and Inspection Mode <Ref. to EN(H6DO)(diag)-44, PROCEDURE, Inspection Mode.>.

WIRING DIAGRAM:

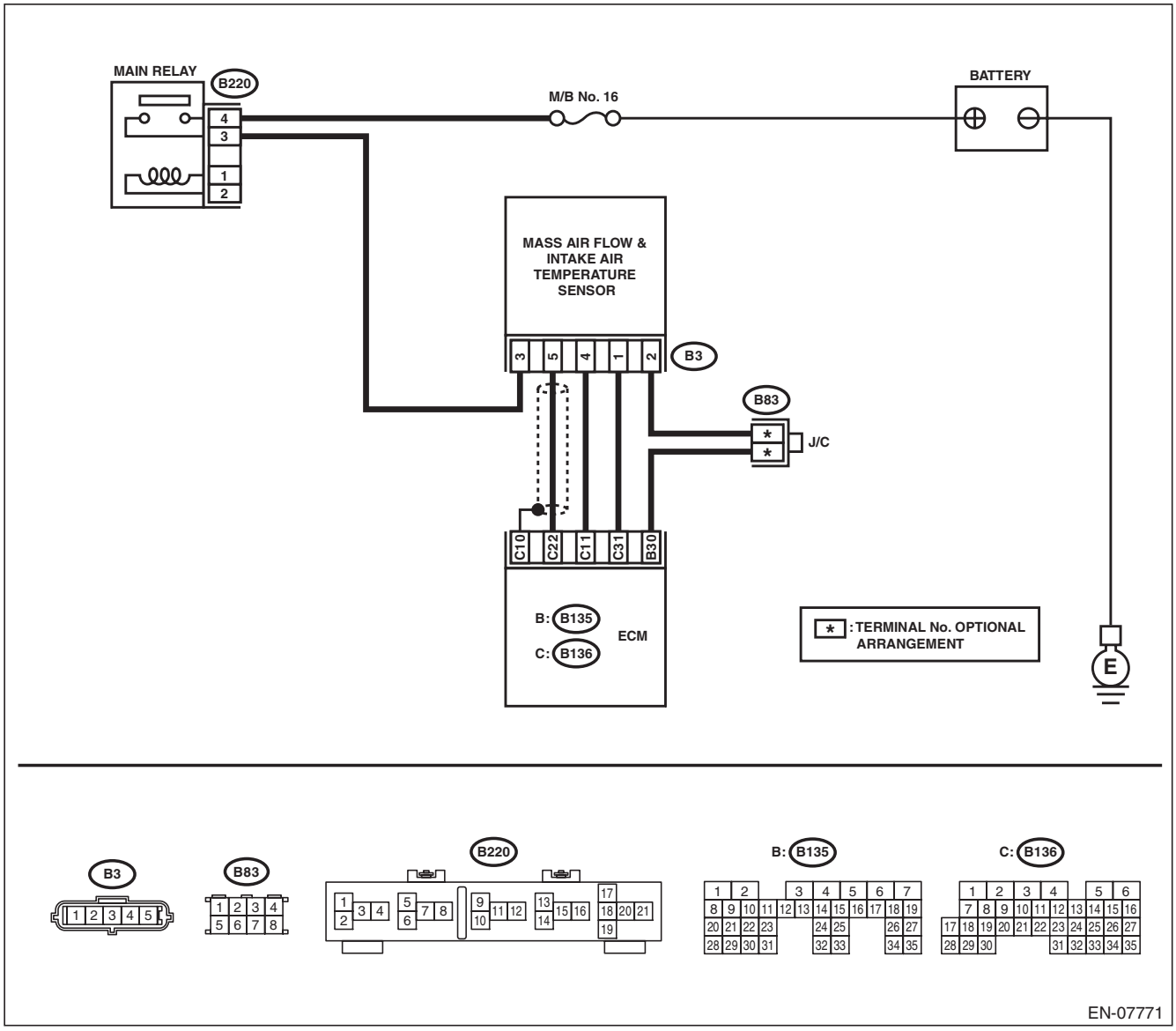

GETTHEMANUALS.org

	Step	Check	Yes	No
1	**CHECK CURRENT DATA.** 1) Start the engine. 2) Read the value of «Intake Air Temp.» using the Subaru Select Monitor or a general scan tool. NOTE: • Subaru Select Monitor For detailed operation procedures, refer to "READ CURRENT DATA FOR ENGINE". <Ref. to EN(H6DO)(diag)-35, Subaru Select Monitor.> • General scan tool For detailed operation procedures, refer to the general scan tool operation manual.	Is the value of «Intake Air Temp.» less than –40°C (–40°F)?	Go to step **2**.	Even if DTC is detected, the circuit has returned to a normal condition at this time. Reproduce the failure, and then perform the diagnosis again. NOTE: In this case, temporary poor contact of connector, temporary open or short circuit of harness may be the cause.
2	**CHECK FOR POOR CONTACT.** Check for poor contact of ECM and mass air flow and intake air temperature sensor connector.	Is there poor contact of ECM or mass air flow and intake air temperature sensor connector?	Repair the poor contact of ECM or mass air flow and intake air temperature sensor connector.	Go to step **3**.
3	**CHECK HARNESS BETWEEN ECM AND MASS AIR FLOW AND INTAKE AIR TEMPERATURE SENSOR CONNECTOR.** 1) Turn the ignition switch to OFF. 2) Disconnect the connector from ECM and the mass air flow and intake air temperature sensor. 3) Measure the resistance of harness between ECM and the mass air flow and intake air temperature sensor connector. ***Connector & terminal*** ***(B136) No. 31 — (B3) No. 1:*** ***(B135) No. 30 — (B3) No. 2:***	Is the resistance less than 1 Ω?	Go to step **4**.	Repair the harness and connector. NOTE: In this case, repair the following item: • Open circuit in harness between ECM and mass air flow and intake air temperature sensor connector • Poor contact of joint connector
4	**CHECK HARNESS BETWEEN ECM AND MASS AIR FLOW AND INTAKE AIR TEMPERATURE SENSOR CONNECTOR.** 1) Connect all connectors. 2) Turn the ignition switch to ON. 3) Disconnect the connectors from the mass air flow and intake air temperature sensor. 4) Measure the voltage between ECM and chassis ground. ***Connector & terminal*** ***(B136) No. 31 (+) — Chassis ground (–):***	Is the voltage 5 V or more?	Repair the short circuit of harness to power supply between ECM and mass air flow and intake air temperature sensor connector.	Replace the mass air flow and intake air temperature sensor. <Ref. to FU(H6DO)-41, Mass Air Flow and Intake Air Temperature Sensor.>

GETtheMANUALS.org

AB:DTC P0117 ENGINE COOLANT TEMPERATURE CIRCUIT LOW

DTC DETECTING CONDITION:

- Immediately at fault recognition
- GENERAL DESCRIPTION <Ref. to GD(H6DO)-50, DTC P0117 ENGINE COOLANT TEMPERATURE CIRCUIT LOW, Diagnostic Trouble Code (DTC) Detecting Criteria.>

TROUBLE SYMPTOM:

- Hard to start
- Improper idling
- Poor driving performance

CAUTION:

After servicing or replacing faulty parts, perform Clear Memory Mode <Ref. to EN(H6DO)(diag)-57, OPERATION, Clear Memory Mode.>, and Inspection Mode <Ref. to EN(H6DO)(diag)-44, PROCEDURE, Inspection Mode.>.

WIRING DIAGRAM:

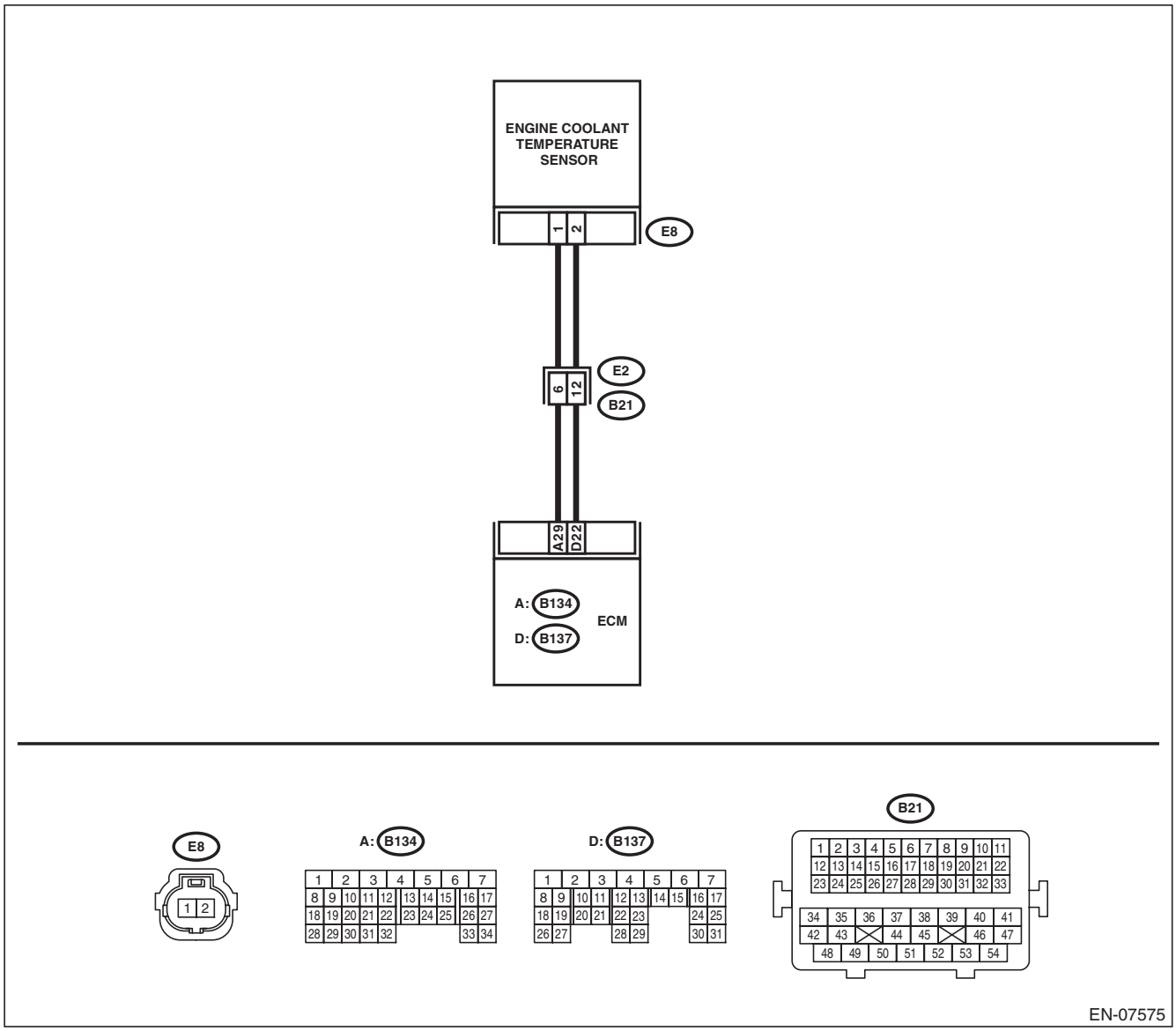

GETTHEMANUALS.org

	Step	Check	Yes	No
1	**CHECK CURRENT DATA.** 1) Start the engine. 2) Read the value of «Coolant Temp.» using the Subaru Select Monitor or a general scan tool. NOTE: • Subaru Select Monitor For detailed operation procedures, refer to "READ CURRENT DATA FOR ENGINE". <Ref. to EN(H6DO)(diag)-35, Subaru Select Monitor.> • General scan tool For detailed operation procedures, refer to the general scan tool operation manual.	Is the value of «Coolant Temp.» 150°C (302°F) or more?	Go to step **2**.	Even if DTC is detected, the circuit has returned to a normal condition at this time. Reproduce the failure, and then perform the diagnosis again. NOTE: In this case, temporary poor contact of connector, temporary open or short circuit of harness may be the cause.
2	**CHECK HARNESS BETWEEN ECM AND ENGINE COOLANT TEMPERATURE SENSOR CONNECTOR.** 1) Turn the ignition switch to OFF. 2) Disconnect the connectors from ECM and engine coolant temperature sensor. 3) Measure the resistance between ECM and chassis ground. ***Connector & terminal*** ***(B137) No. 22 — Chassis ground:***	Is the resistance 1 MΩ or more?	Replace the engine coolant temperature sensor. <Ref. to FU(H6DO)-29, Engine Coolant Temperature Sensor.>	Repair short circuit in harness to ground between ECM and engine coolant temperature sensor connector.

GETtheMANUALS.org

AC:DTC P0118 ENGINE COOLANT TEMPERATURE CIRCUIT HIGH

DTC DETECTING CONDITION:

- Immediately at fault recognition
- GENERAL DESCRIPTION <Ref. to GD(H6DO)-52, DTC P0118 ENGINE COOLANT TEMPERATURE CIRCUIT HIGH, Diagnostic Trouble Code (DTC) Detecting Criteria.>

TROUBLE SYMPTOM:

- Hard to start
- Improper idling
- Poor driving performance

CAUTION:

After servicing or replacing faulty parts, perform Clear Memory Mode <Ref. to EN(H6DO)(diag)-57, OPERATION, Clear Memory Mode.>, and Inspection Mode <Ref. to EN(H6DO)(diag)-44, PROCEDURE, Inspection Mode.>.

WIRING DIAGRAM:

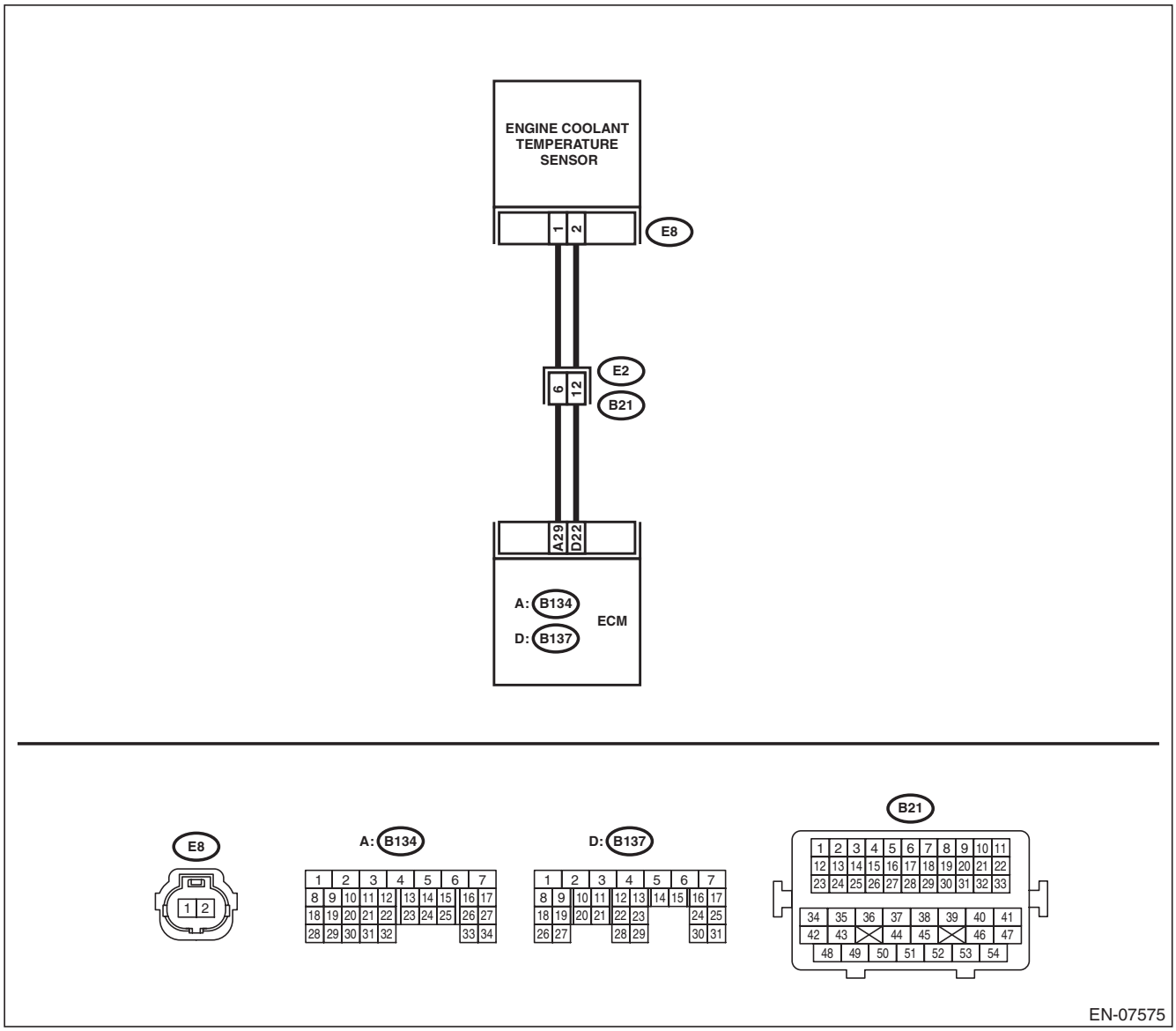

GETTHEMANUALS.org

	Step	Check	Yes	No
1	**CHECK CURRENT DATA.** 1) Start the engine. 2) Read the value of «Coolant Temp.» using the Subaru Select Monitor or a general scan tool. NOTE: • Subaru Select Monitor For detailed operation procedures, refer to "READ CURRENT DATA FOR ENGINE". <Ref. to EN(H6DO)(diag)-35, Subaru Select Monitor.> • General scan tool For detailed operation procedures, refer to the general scan tool operation manual.	Is the value of «Coolant Temp.» less than –40°C (–40°F)?	Go to step **2**.	Even if DTC is detected, the circuit has returned to a normal condition at this time. Reproduce the failure, and then perform the diagnosis again. NOTE: In this case, temporary poor contact of connector, temporary open or short circuit of harness may be the cause.
2	**CHECK FOR POOR CONTACT.** Check for poor contact of ECM and engine coolant temperature sensor connector.	Is there poor contact of ECM or engine coolant temperature sensor connector?	Repair the poor contact of ECM or engine coolant temperature sensor connector.	Go to step **3**.
3	**CHECK HARNESS BETWEEN ECM AND ENGINE COOLANT TEMPERATURE SENSOR CONNECTOR.** 1) Turn the ignition switch to OFF. 2) Disconnect the connectors from ECM and engine coolant temperature sensor. 3) Measure the resistance of harness between ECM and engine coolant temperature sensor connector. ***Connector & terminal*** ***(B134) No. 29 — (E8) No. 1:*** ***(B137) No. 22 — (E8) No. 2:***	Is the resistance less than 1 Ω?	Go to step **4**.	Repair the harness and connector. NOTE: In this case, repair the following item: • Open circuit in harness between ECM and engine coolant temperature sensor connector • Poor contact of coupling connector
4	**CHECK HARNESS BETWEEN ECM AND ENGINE COOLANT TEMPERATURE SENSOR CONNECTOR.** 1) Connect all connectors. 2) Turn the ignition switch to ON. 3) Measure the voltage between ECM and chassis ground. ***Connector & terminal*** ***(B137) No. 22 (+) — Chassis ground (–):***	Is the voltage 5 V or more?	Repair the short circuit to power in harness between ECM and engine coolant temperature sensor connector.	Replace the engine coolant temperature sensor. <Ref. to FU(H6DO)-29, Engine Coolant Temperature Sensor.>

GETTHEMANUALS.org

AD:DTC P0122 THROTTLE/PEDAL POSITION SENSOR/SWITCH “A” CIRCUIT LOW

DTC DETECTING CONDITION:

- Immediately at fault recognition
- GENERAL DESCRIPTION <Ref. to GD(H6DO)-54, DTC P0122 THROTTLE/PEDAL POSITION SENSOR/SWITCH “A” CIRCUIT LOW, Diagnostic Trouble Code (DTC) Detecting Criteria.>

TROUBLE SYMPTOM:

- Improper idling
- Engine stalls.
- Poor driving performance

CAUTION:

After servicing or replacing faulty parts, perform Clear Memory Mode <Ref. to EN(H6DO)(diag)-57, OPERATION, Clear Memory Mode.>, and Inspection Mode <Ref. to EN(H6DO)(diag)-44, PROCEDURE, Inspection Mode.>.

WIRING DIAGRAM:

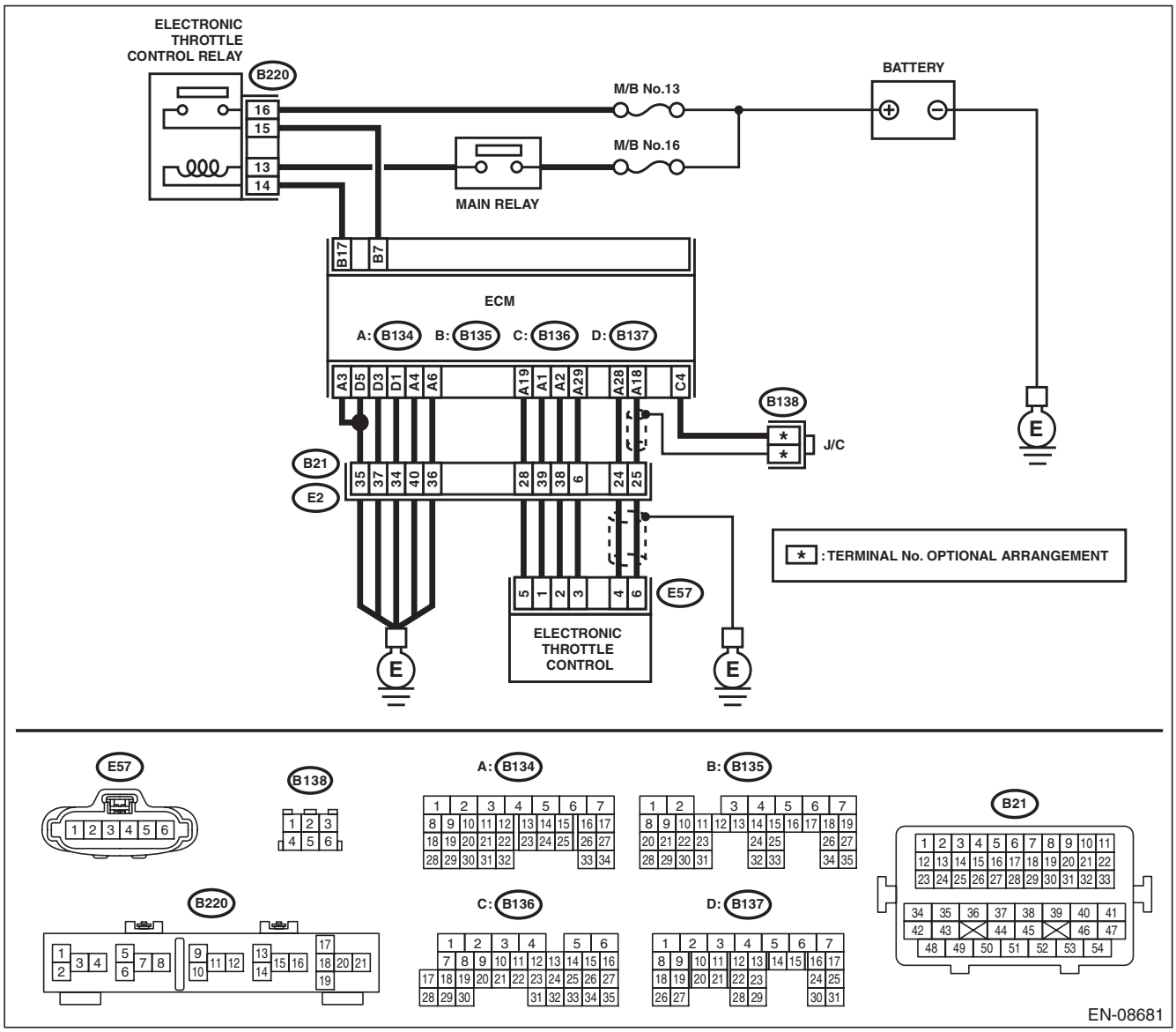

GET THE MANUALS.org

Step		Check	Yes	No
1	**CHECK HARNESS BETWEEN ECM AND ELECTRONIC THROTTLE CONTROL.** 1) Turn the ignition switch to OFF. 2) Disconnect the connectors from ECM and electronic throttle control. 3) Measure the resistance between ECM and chassis ground. ***Connector & terminal*** ***(B134) No. 19 — Chassis ground:*** ***(B134) No. 18 — Chassis ground:*** ***(B134) No. 18 — (B136) No. 4:***	Is the resistance 1 MΩ or more?	Go to step **2**.	Repair the short circuit to ground in harness between ECM and electronic throttle control connector.
2	**CHECK SHORT CIRCUIT INSIDE THE ECM.** 1) Connect the connector to ECM. 2) Measure the resistance between electronic throttle control connector and engine ground. ***Connector & terminal*** ***(E57) No. 6 — Engine ground:***	Is the resistance 1 MΩ or more?	Replace the electronic throttle control. <Ref. to FU(H6DO)-19, Throttle Body.>	Repair the short circuit to ground in harness between ECM and electronic throttle control connector. Replace the ECM if defective. <Ref. to FU(H6DO)-54, Engine Control Module (ECM).>

GETTHEMANUALS.org

AE:DTC P0123 THROTTLE/PEDAL POSITION SENSOR/SWITCH “A” CIRCUIT HIGH

DTC DETECTING CONDITION:

- Immediately at fault recognition
- GENERAL DESCRIPTION <Ref. to GD(H6DO)-56, DTC P0123 THROTTLE/PEDAL POSITION SENSOR/SWITCH “A” CIRCUIT HIGH, Diagnostic Trouble Code (DTC) Detecting Criteria.>

TROUBLE SYMPTOM:

- Improper idling
- Engine stalls.
- Poor driving performance

CAUTION:

After servicing or replacing faulty parts, perform Clear Memory Mode <Ref. to EN(H6DO)(diag)-57, OPERATION, Clear Memory Mode.>, and Inspection Mode <Ref. to EN(H6DO)(diag)-44, PROCEDURE, Inspection Mode.>.

WIRING DIAGRAM:

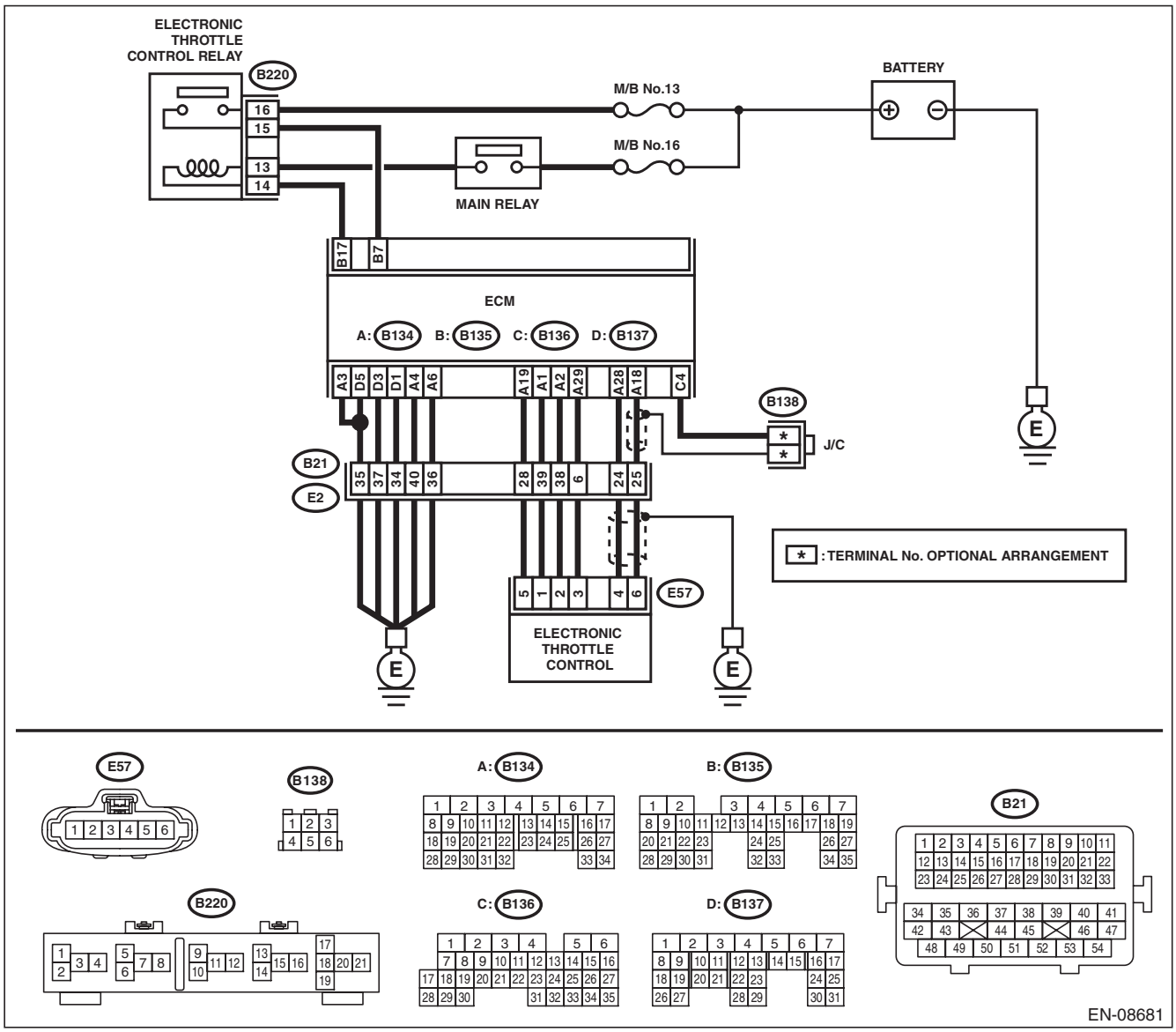

GETTHEMANUALS.org

	Step	Check	Yes	No
1	**CHECK HARNESS BETWEEN ECM AND ELECTRONIC THROTTLE CONTROL.** 1) Turn the ignition switch to OFF. 2) Disconnect the connectors from ECM and electronic throttle control. 3) Measure the resistance of harness between ECM and electronic throttle control connector. ***Connector & terminal*** ***(B134) No. 18 — (E57) No. 6:*** ***(B134) No. 29 — (E57) No. 3:***	Is the resistance less than 1 Ω?	Go to step **2**.	Repair the harness and connector. NOTE: In this case, repair the following item: • Open circuit in harness between ECM and electronic throttle control connector • Poor contact of coupling connector
2	**CHECK HARNESS BETWEEN ECM AND ELECTRONIC THROTTLE CONTROL.** 1) Connect the connector to ECM. 2) Measure the resistance between electronic throttle control connector and engine ground. ***Connector & terminal*** ***(E57) No. 3 — Engine ground:***	Is the resistance less than 5 Ω?	Go to step **3**.	Repair the harness and connector. NOTE: In this case, repair the following item: • Open circuit of harness between ECM and engine ground • Poor contact of ECM connector • Poor contact of coupling connector
3	**CHECK HARNESS BETWEEN ECM AND ELECTRONIC THROTTLE CONTROL.** 1) Turn the ignition switch to ON. 2) Measure the voltage between electronic throttle control connector and engine ground. ***Connector & terminal*** ***(E57) No. 6 (+) — Engine ground (–):***	Is the voltage 5 V or more?	Repair the short circuit to power in harness between ECM and electronic throttle control connector.	Go to step **4**.
4	**CHECK HARNESS BETWEEN ECM AND ELECTRONIC THROTTLE CONTROL.** 1) Turn the ignition switch to OFF. 2) Disconnect the connectors from ECM. 3) Measure the resistance between ECM connectors. ***Connector & terminal*** ***(B134) No. 19 — (B134) No. 18:***	Is the resistance 1 MΩ or more?	Repair the poor contact of electronic throttle control connector. Replace the electronic throttle control if defective. <Ref. to FU(H6DO)-19, Throttle Body.>	Repair the short circuit to power in harness between ECM and electronic throttle control connector.

GETTHEMANUALS.org

AF:DTC P0125 INSUFFICIENT COOLANT TEMPERATURE FOR CLOSED LOOP FUEL CONTROL

DTC DETECTING CONDITION:

- Detected when two consecutive driving cycles with fault occur.
- GENERAL DESCRIPTION <Ref. to GD(H6DO)-58, DTC P0125 INSUFFICIENT COOLANT TEMPERATURE FOR CLOSED LOOP FUEL CONTROL, Diagnostic Trouble Code (DTC) Detecting Criteria.>

TROUBLE SYMPTOM:

Engine does not return to idle.

CAUTION:

After servicing or replacing faulty parts, perform Clear Memory Mode <Ref. to EN(H6DO)(diag)-57, OPERATION, Clear Memory Mode.>, and Inspection Mode <Ref. to EN(H6DO)(diag)-44, PROCEDURE, Inspection Mode.>.

Step		Check	Yes	No
1	**CHECK TIRE SIZE.**	Is the tire size as specified and the same size as three other wheels?	Go to step **2**.	Replace the tire.
2	**CHECK ENGINE COOLANT.** Check the following items: • Amount of engine coolant • Engine coolant freeze • Contamination of engine coolant	Is the engine coolant normal?	Go to step **3**.	Fill or replace the engine coolant. <Ref. to CO(H6DO)-12, Engine Coolant.>
3	**CHECK THERMOSTAT.**	Does the thermostat remain opened?	Replace the thermostat. <Ref. to CO(H6DO)-15, Thermostat.>	Replace the engine coolant temperature sensor. <Ref. to FU(H6DO)-29, Engine Coolant Temperature Sensor.>

GETTHEMANUALS.org

AG:DTC P0126 INSUFFICIENT ENGINE COOLANT TEMPERATURE FOR STABLE OPERATION

DTC DETECTING CONDITION:

- Detected when two consecutive driving cycles with fault occur.
- GENERAL DESCRIPTION <Ref. to GD(H6DO)-60, DTC P0126 INSUFFICIENT ENGINE COOLANT TEMPERATURE FOR STABLE OPERATION, Diagnostic Trouble Code (DTC) Detecting Criteria.>

TROUBLE SYMPTOM:

- Hard to start
- Improper idling
- Poor driving performance

CAUTION:

After servicing or replacing faulty parts, perform Clear Memory Mode <Ref. to EN(H6DO)(diag)-57, OPERATION, Clear Memory Mode.>, and Inspection Mode <Ref. to EN(H6DO)(diag)-44, PROCEDURE, Inspection Mode.>.

Step		Check	Yes	No
1	**CHECK ENGINE COOLANT TEMPERATURE SENSOR.** 1) Disconnect the connectors from the engine coolant temperature sensor. 2) Measure the resistance between engine coolant temperature sensor terminals when the engine coolant is cold and after warmed up. ***Terminals*** ***No. 1 — No. 2:***	Is the resistance of engine coolant temperature sensor different between when engine coolant is cold and after warmed up?	Repair the poor contact of ECM connector.	Replace the engine coolant temperature sensor. <Ref. to FU(H6DO)-29, Engine Coolant Temperature Sensor.>

GETtheMANUALS.org

AH:DTC P0128 COOLANT THERMOSTAT (ENGINE COOLANT TEMPERATURE BELOW THERMOSTAT REGULATING TEMPERATURE)

DTC DETECTING CONDITION:

- Detected when two consecutive driving cycles with fault occur.
- GENERAL DESCRIPTION <Ref. to GD(H6DO)-62, DTC P0128 COOLANT THERMOSTAT (ENGINE COOLANT TEMPERATURE BELOW THERMOSTAT REGULATING TEMPERATURE), Diagnostic Trouble Code (DTC) Detecting Criteria.>

TROUBLE SYMPTOM:

Thermostat remains open.

CAUTION:

After servicing or replacing faulty parts, perform Clear Memory Mode <Ref. to EN(H6DO)(diag)-57, OPERATION, Clear Memory Mode.>, and Inspection Mode <Ref. to EN(H6DO)(diag)-44, PROCEDURE, Inspection Mode.>.

Step		Check	Yes	No
1	**CHECK ENGINE COOLANT.**	Is the engine coolant amount normal?	Go to step **2**.	Refill the engine coolant. <Ref. to CO(H6DO)-12, Engine Coolant.>
2	**CHECK RADIATOR FAN.** 1) Start the engine. 2) Check the radiator fan operation.	Does the radiator fan continuously rotate for 3 minutes or more during idling?	Repair radiator fan circuit. <Ref. to CO(H6DO)-21, Radiator Main Fan and Fan Motor.> and <Ref. to CO(H6DO)-24, Radiator Sub Fan and Fan Motor.>	Replace the thermostat. <Ref. to CO(H6DO)-15, Thermostat.>

GETtheMANUALS.org

AI: DTC P0131 O2 SENSOR CIRCUIT LOW VOLTAGE (BANK 1 SENSOR 1)

DTC DETECTING CONDITION:

- Immediately at fault recognition
- GENERAL DESCRIPTION <Ref. to GD(H6DO)-66, DTC P0131 O2 SENSOR CIRCUIT LOW VOLTAGE (BANK 1 SENSOR 1), Diagnostic Trouble Code (DTC) Detecting Criteria.>

CAUTION:

After servicing or replacing faulty parts, perform Clear Memory Mode <Ref. to EN(H6DO)(diag)-57, OPERATION, Clear Memory Mode.>, and Inspection Mode <Ref. to EN(H6DO)(diag)-44, PROCEDURE, Inspection Mode.>.

WIRING DIAGRAM:

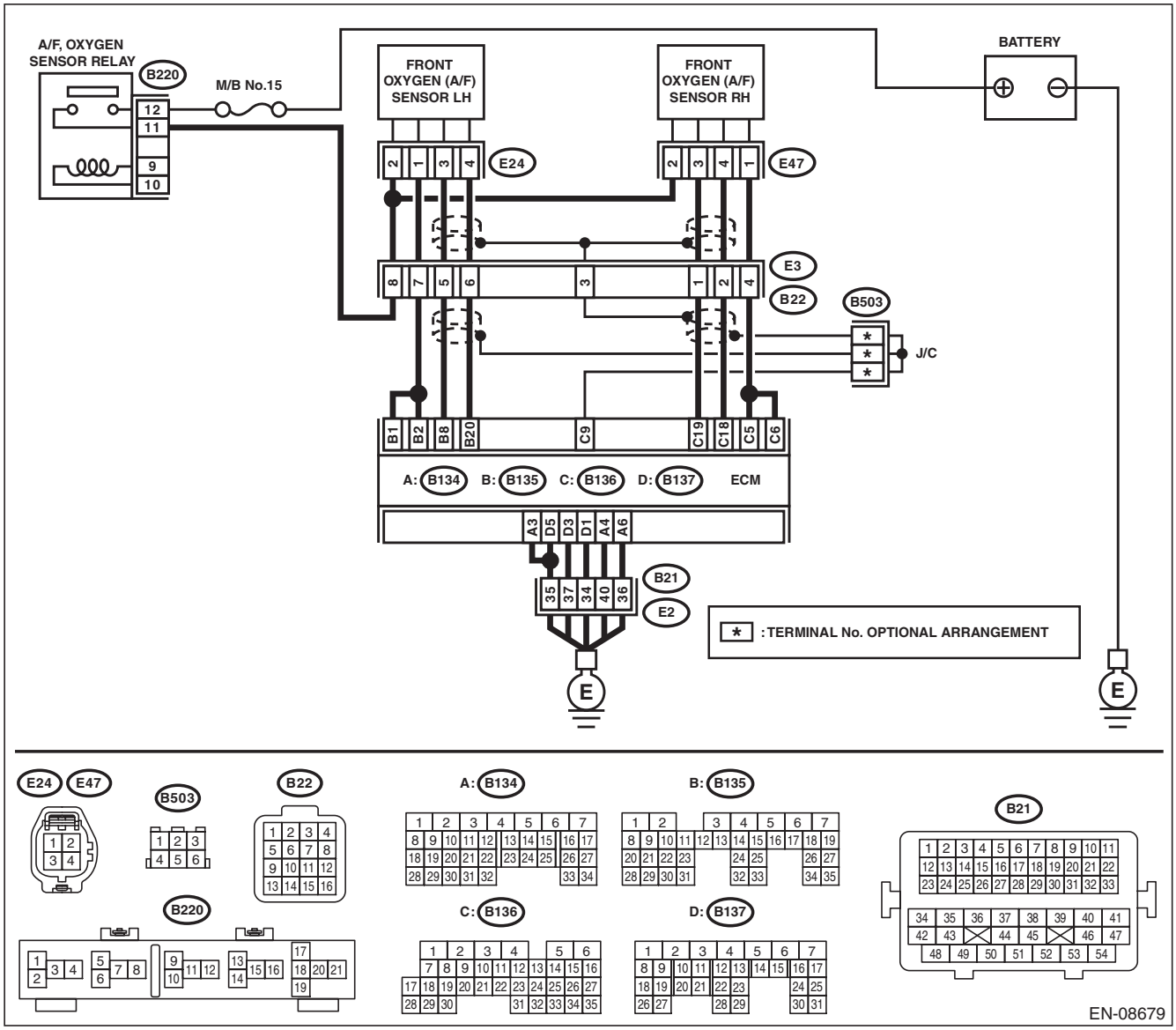

Step		Check	Yes	No
1	**CHECK FRONT OXYGEN (A/F) SENSOR CONNECTOR AND COUPLING CONNECTOR.**	Has water entered the connector?	Completely remove any water inside.	Go to step **2**.

GETtheMANUALS.org

Step		Check	Yes	No
2	**CHECK HARNESS BETWEEN ECM AND FRONT OXYGEN (A/F) SENSOR CONNECTOR.** 1) Turn the ignition switch to OFF. 2) Disconnect the connectors from ECM and front oxygen (A/F) sensor connector. 3) Measure the resistance between ECM and chassis ground. ***Connector & terminal*** ***(B136) No. 18 — Chassis ground:*** ***(B136) No. 19 — Chassis ground:***	Is the resistance 1 MΩ or more?	Go to step **3**.	Repair the ground short circuit of harness between ECM and front oxygen (A/F) sensor connector.
3	**CHECK FOR POOR CONTACT.** Check for poor contact of the front oxygen (A/F) sensor connector.	Is there poor contact of front oxygen (A/F) sensor connector?	Repair the poor contact of front oxygen (A/F) sensor connector.	Replace the front oxygen (A/F) sensor. <Ref. to FU(H6DO)-50, Front Oxygen (A/F) Sensor.>

GETtheMANUALS.org

AJ:DTC P0132 O2 SENSOR CIRCUIT HIGH VOLTAGE (BANK 1 SENSOR 1)

DTC DETECTING CONDITION:

- Immediately at fault recognition
- GENERAL DESCRIPTION <Ref. to GD(H6DO)-68, DTC P0132 O2 SENSOR CIRCUIT HIGH VOLTAGE (BANK 1 SENSOR 1), Diagnostic Trouble Code (DTC) Detecting Criteria.>

CAUTION:

After servicing or replacing faulty parts, perform Clear Memory Mode <Ref. to EN(H6DO)(diag)-57, OPERATION, Clear Memory Mode.>, and Inspection Mode <Ref. to EN(H6DO)(diag)-44, PROCEDURE, Inspection Mode.>.

WIRING DIAGRAM:

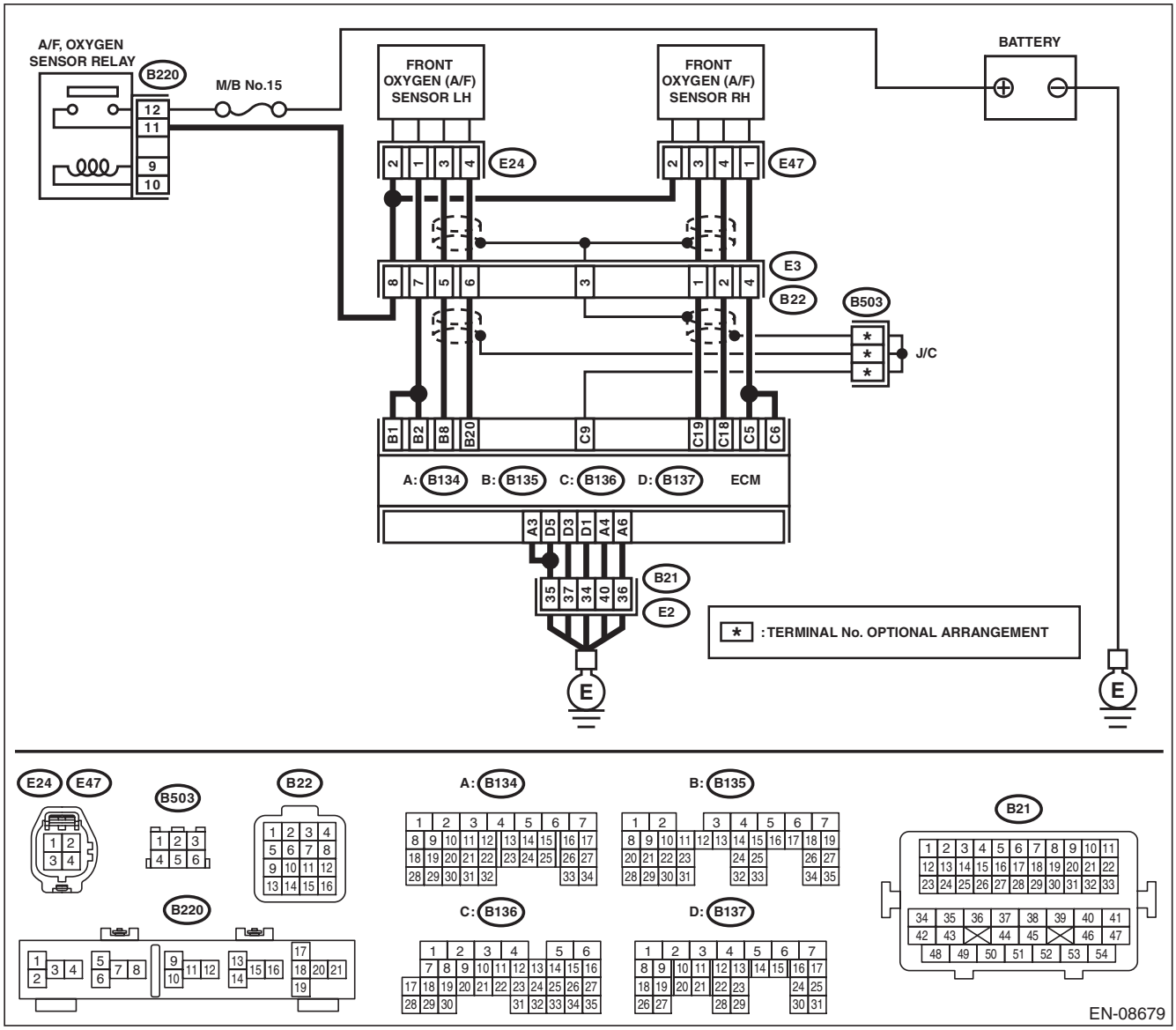

Step		Check	Yes	No
1	**CHECK FRONT OXYGEN (A/F) SENSOR CONNECTOR AND COUPLING CONNECTOR.**	Has water entered the connector?	Completely remove any water inside.	Go to step **2**.

GETTHEMANUALS.org

Step		Check	Yes	No
2	**CHECK HARNESS BETWEEN ECM AND FRONT OXYGEN (A/F) SENSOR CONNECTOR.** 1) Turn the ignition switch to OFF. 2) Disconnect the connectors from front oxygen (A/F) sensor. 3) Turn the ignition switch to ON. 4) Measure the voltage between ECM and chassis ground. ***Connector & terminal*** ***(B136) No. 18 (+) — Chassis ground (–):*** ***(B136) No. 19 (+) — Chassis ground (–):***	Is the voltage 8 V or more?	Repair the short circuit to power in the harness between ECM and front oxygen (A/F) sensor connector.	Replace the front oxygen (A/F) sensor. <Ref. to FU(H6DO)-50, Front Oxygen (A/F) Sensor.>

GETTHEMANUALS.org

AK:DTC P0134 O2 SENSOR CIRCUIT NO ACTIVITY DETECTED (BANK 1 SENSOR 1)

DTC DETECTING CONDITION:

- Immediately at fault recognition
- GENERAL DESCRIPTION <Ref. to GD(H6DO)-70, DTC P0134 O2 SENSOR CIRCUIT NO ACTIVITY DETECTED (BANK 1 SENSOR 1), Diagnostic Trouble Code (DTC) Detecting Criteria.>

CAUTION:

After servicing or replacing faulty parts, perform Clear Memory Mode <Ref. to EN(H6DO)(diag)-57, OPERATION, Clear Memory Mode.>, and Inspection Mode <Ref. to EN(H6DO)(diag)-44, PROCEDURE, Inspection Mode.>.

WIRING DIAGRAM:

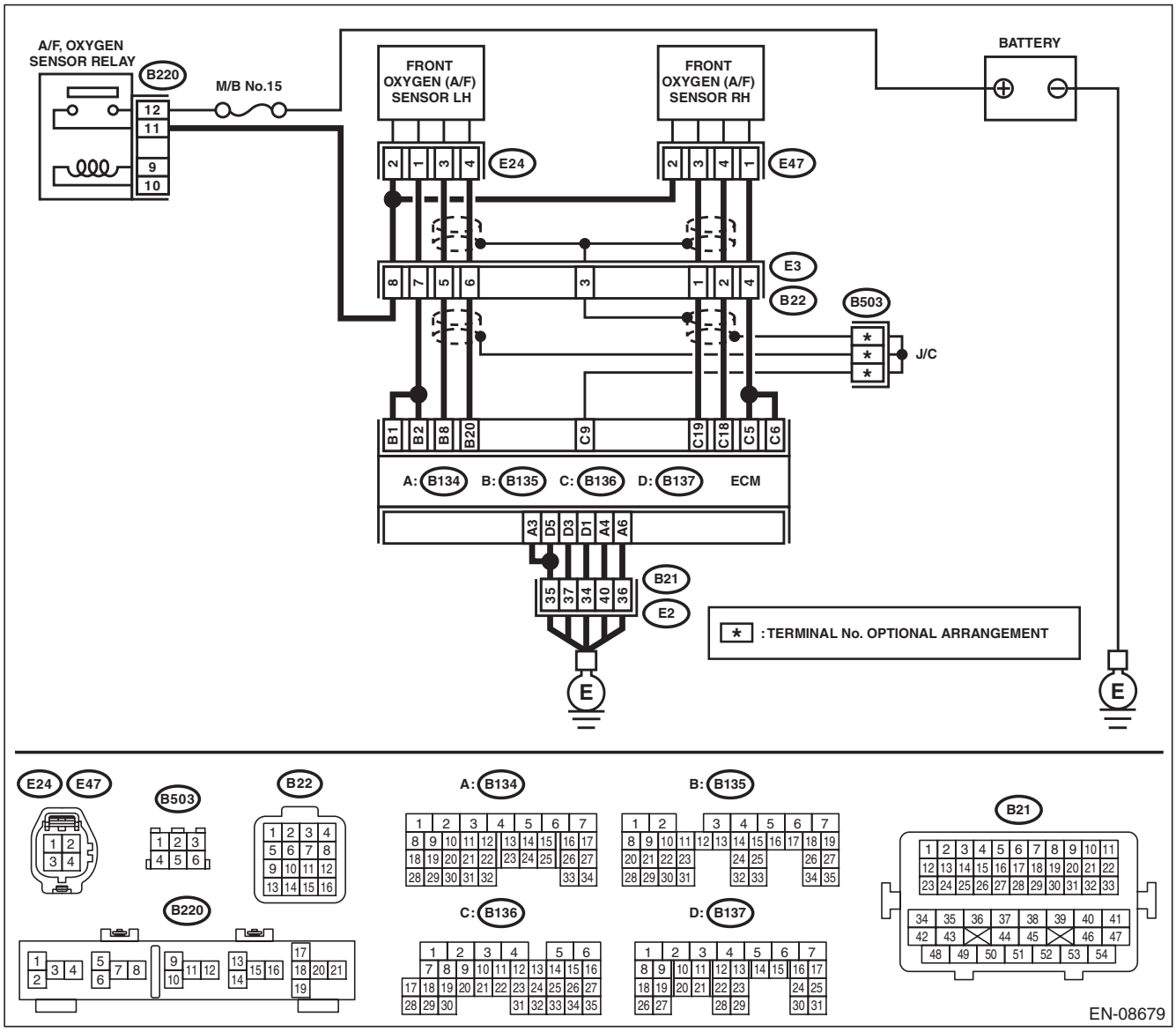

GET them MANUALS.org

Step		Check	Yes	No
1	**CHECK HARNESS BETWEEN ECM AND FRONT OXYGEN (A/F) SENSOR CONNECTOR.** 1) Turn the ignition switch to OFF. 2) Disconnect the connectors from ECM and front oxygen (A/F) sensor connector. 3) Measure the resistance of harness between ECM and front oxygen (A/F) sensor connector. ***Connector & terminal*** ***(B136) No. 19 — (E47) No. 3:*** ***(B136) No. 18 — (E47) No. 4:***	Is the resistance less than 1 Ω?	Go to step **2**.	Repair the harness and connector. NOTE: In this case, repair the following item: • Open circuit in harness between ECM and front oxygen (A/F) sensor connector • Poor contact of coupling connector
2	**CHECK FOR POOR CONTACT.** Check for poor contact of ECM and front oxygen (A/F) sensor connector.	Is there poor contact of ECM or front oxygen (A/F) sensor connector?	Repair the poor contact of ECM or front oxygen (A/F) sensor connector.	Replace the front oxygen (A/F) sensor. <Ref. to FU(H6DO)-50, Front Oxygen (A/F) Sensor.>

GETthemMANUALS.org

AL:DTC P0137 O2 SENSOR CIRCUIT LOW VOLTAGE (BANK 1 SENSOR 2)

DTC DETECTING CONDITION:

- Detected when two consecutive driving cycles with fault occur.
- GENERAL DESCRIPTION <Ref. to GD(H6DO)-72, DTC P0137 O2 SENSOR CIRCUIT LOW VOLTAGE (BANK 1 SENSOR 2), Diagnostic Trouble Code (DTC) Detecting Criteria.>

CAUTION:

After servicing or replacing faulty parts, perform Clear Memory Mode <Ref. to EN(H6DO)(diag)-57, OPERATION, Clear Memory Mode.>, and Inspection Mode <Ref. to EN(H6DO)(diag)-44, PROCEDURE, Inspection Mode.>.

WIRING DIAGRAM:

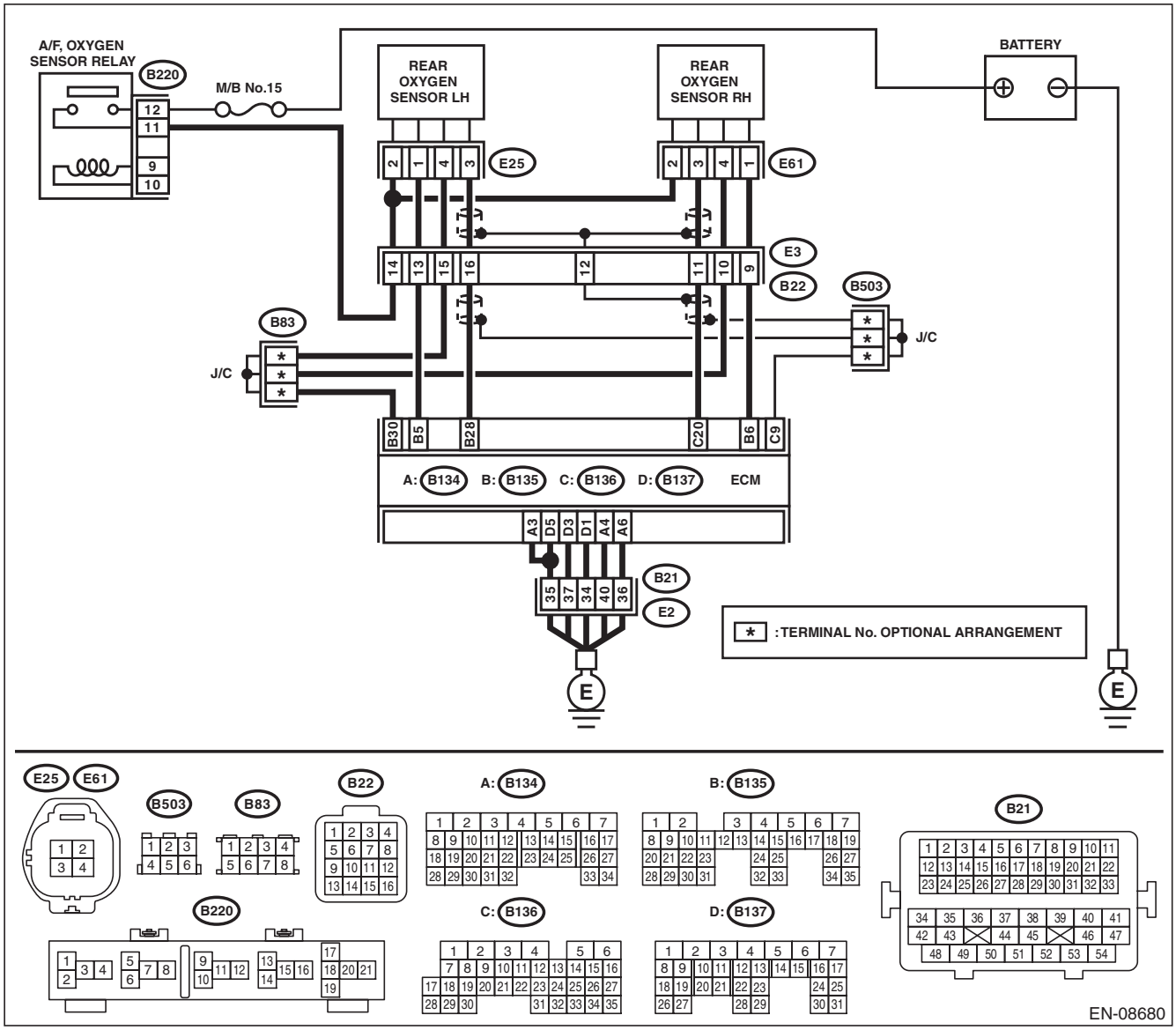

GETTHEMANUALS.org

	Step	Check	Yes	No
1	**CHECK REAR OXYGEN SENSOR DATA.** 1) Warm up the engine until engine coolant temperature is higher than 75°C (167°F), and keep the engine speed at 3,000 rpm. (2 minutes maximum) 2) Read the value of «Front O2 Sensor #1» using the Subaru Select Monitor or a general scan tool. NOTE: • Subaru Select Monitor For detailed operation procedures, refer to "READ CURRENT DATA FOR ENGINE". <Ref. to EN(H6DO)(diag)-35, Subaru Select Monitor.> • General scan tool For detailed operation procedures, refer to the general scan tool operation manual.	Is the value of «Front O2 Sensor #1» 0.490 V or more?	Go to step **5**.	Go to step **2**.
2	**CHECK REAR OXYGEN SENSOR CONNECTOR AND COUPLING CONNECTOR.**	Has water entered the connector?	Completely remove any water inside.	Go to step **3**.
3	**CHECK HARNESS BETWEEN ECM AND REAR OXYGEN SENSOR CONNECTOR.** 1) Turn the ignition switch to OFF. 2) Disconnect the connector from ECM and rear oxygen sensor. 3) Measure the resistance of harness between ECM and rear oxygen sensor connector. ***Connector & terminal*** ***(B136) No. 20 — (E61) No. 3:*** ***(B135) No. 30 — (E61) No. 4:***	Is the resistance less than 1 Ω?	Go to step **4**.	Repair the harness and connector. NOTE: In this case, repair the following item: • Open circuit in harness between ECM and rear oxygen sensor connector • Poor contact of coupling connector
4	**CHECK HARNESS BETWEEN ECM AND REAR OXYGEN SENSOR CONNECTOR.** 1) Connect the connector to ECM. 2) Turn the ignition switch to ON. 3) Measure the voltage between rear oxygen sensor connector and chassis ground. ***Connector & terminal*** ***(E61) No. 3 (+) — Chassis ground (–):***	Is the voltage 0.2 — 0.5 V?	Replace the rear oxygen sensor. <Ref. to FU(H6DO)-52, Rear Oxygen Sensor.>	Repair the harness and connector. NOTE: In this case, repair the following item: • Open circuit in harness between ECM and rear oxygen sensor connector • Poor contact of ECM connector • Poor contact of coupling connector
5	**CHECK EXHAUST SYSTEM.** Check exhaust system parts. NOTE: Check the following items. • Looseness and improper fitting of exhaust system parts • Damage (crack, hole etc.) of parts • Loose part and improper installation between front oxygen (A/F) sensor and rear oxygen sensor	Is there any fault in exhaust system?	Repair or replace faulty parts.	Replace the rear oxygen sensor. <Ref. to FU(H6DO)-52, Rear Oxygen Sensor.>

GETTHEMANUALS.org

AM:DTC P0138 O2 SENSOR CIRCUIT HIGH VOLTAGE (BANK 1 SENSOR 2)

DTC DETECTING CONDITION:

- Detected when two consecutive driving cycles with fault occur.
- GENERAL DESCRIPTION <Ref. to GD(H6DO)-75, DTC P0138 O2 SENSOR CIRCUIT HIGH VOLTAGE (BANK 1 SENSOR 2), Diagnostic Trouble Code (DTC) Detecting Criteria.>

CAUTION:

After servicing or replacing faulty parts, perform Clear Memory Mode <Ref. to EN(H6DO)(diag)-57, OPERATION, Clear Memory Mode.>, and Inspection Mode <Ref. to EN(H6DO)(diag)-44, PROCEDURE, Inspection Mode.>.

WIRING DIAGRAM:

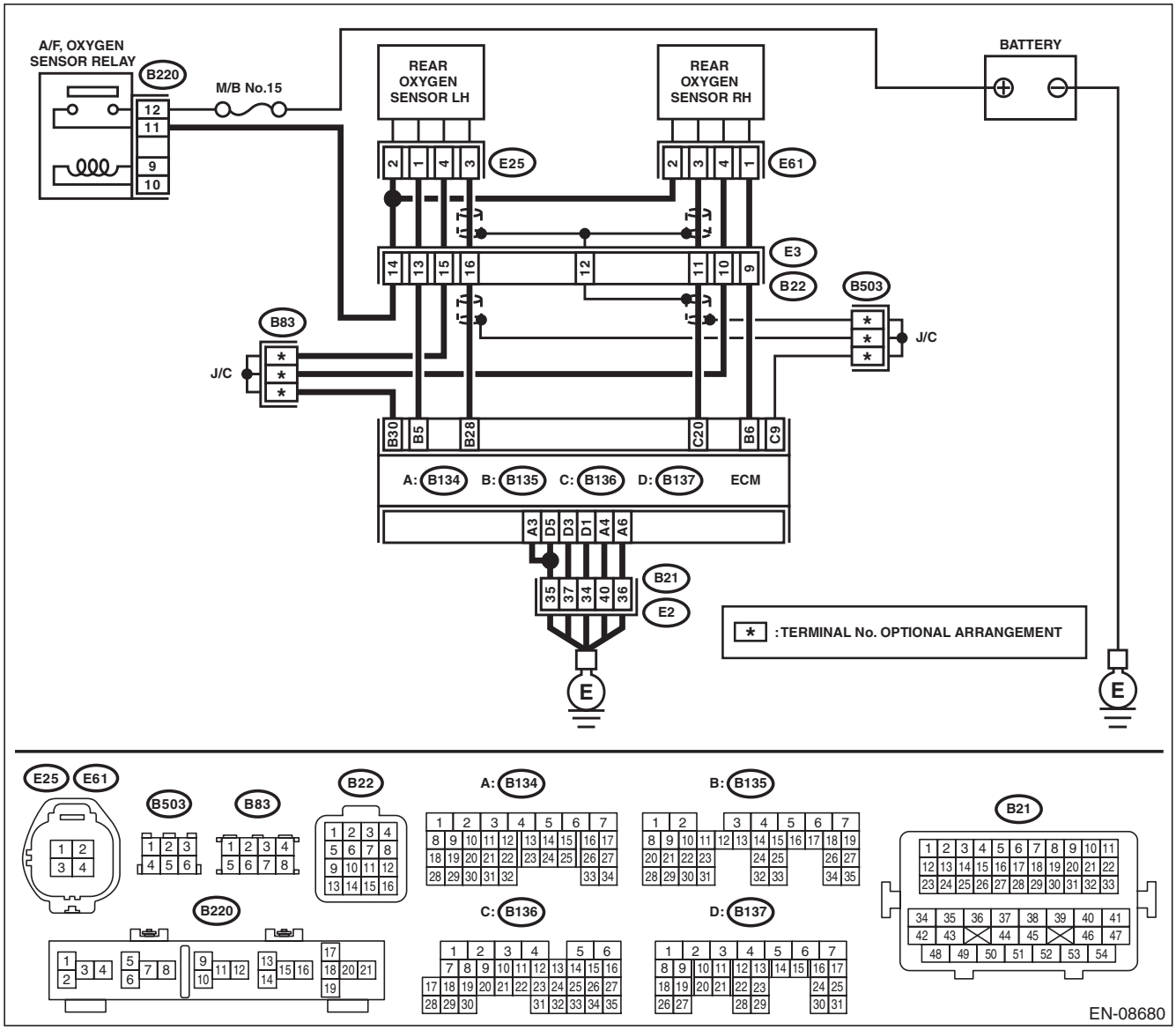

GETTHEMANUALS.org

	Step	Check	Yes	No
1	**CHECK REAR OXYGEN SENSOR DATA.** 1) Warm up the engine until engine coolant temperature is higher than 75°C (167°F), and rapidly reduce the engine speed from 3,000 rpm. 2) Read the value of «Front O2 Sensor #1» using the Subaru Select Monitor or a general scan tool. NOTE: • Subaru Select Monitor For detailed operation procedures, refer to "READ CURRENT DATA FOR ENGINE". <Ref. to EN(H6DO)(diag)-35, Subaru Select Monitor.> • General scan tool For detailed operation procedures, refer to the general scan tool operation manual.	Is the value of «Front O2 Sensor #1» 0.250 V or less?	Go to step **5**.	Go to step **2**.
2	**CHECK REAR OXYGEN SENSOR CONNECTOR AND COUPLING CONNECTOR.**	Has water entered the connector?	Completely remove any water inside.	Go to step **3**.
3	**CHECK HARNESS BETWEEN ECM AND REAR OXYGEN SENSOR CONNECTOR.** 1) Turn the ignition switch to OFF. 2) Disconnect the connector from ECM and rear oxygen sensor. 3) Measure the resistance of harness between ECM and rear oxygen sensor connector. ***Connector & terminal*** ***(B136) No. 20 — (E61) No. 3:*** ***(B135) No. 30 — (E61) No. 4:***	Is the resistance less than 1 Ω?	Go to step **4**.	Repair the harness and connector. NOTE: In this case, repair the following item: • Open circuit in harness between ECM and rear oxygen sensor connector • Poor contact of coupling connector
4	**CHECK HARNESS BETWEEN ECM AND REAR OXYGEN SENSOR CONNECTOR.** 1) Connect the connector to ECM. 2) Turn the ignition switch to ON. 3) Measure the voltage between rear oxygen sensor connector and chassis ground. ***Connector & terminal*** ***(E61) No. 3 (+) — Chassis ground (–):***	Is the voltage 0.2 — 0.5 V?	Replace the rear oxygen sensor. <Ref. to FU(H6DO)-52, Rear Oxygen Sensor.>	Repair the harness and connector. NOTE: In this case, repair the following item: • Open circuit in harness between ECM and rear oxygen sensor connector • Poor contact of ECM connector • Poor contact of coupling connector
5	**CHECK EXHAUST SYSTEM.** Check exhaust system parts. NOTE: Check the following items. • Looseness and improper fitting of exhaust system parts • Damage (crack, hole etc.) of parts • Loose part and improper installation between front oxygen (A/F) sensor and rear oxygen sensor	Is there any fault in exhaust system?	Repair or replace faulty parts.	Replace the rear oxygen sensor. <Ref. to FU(H6DO)-52, Rear Oxygen Sensor.>

GETTHEMANUALS.org

AN:DTC P013A O2 SENSOR SLOW RESPONSE - RICH TO LEAN (BANK 1 SENSOR 2)

DTC DETECTING CONDITION:

- Detected when two consecutive driving cycles with fault occur.
- GENERAL DESCRIPTION <Ref. to GD(H6DO)-76, DTC P013A O2 SENSOR SLOW RESPONSE - RICH TO LEAN (BANK 1 SENSOR 2), Diagnostic Trouble Code (DTC) Detecting Criteria.>

CAUTION:

After servicing or replacing faulty parts, perform Clear Memory Mode <Ref. to EN(H6DO)(diag)-57, OPERATION, Clear Memory Mode.>, and Inspection Mode <Ref. to EN(H6DO)(diag)-44, PROCEDURE, Inspection Mode.>.

WIRING DIAGRAM:

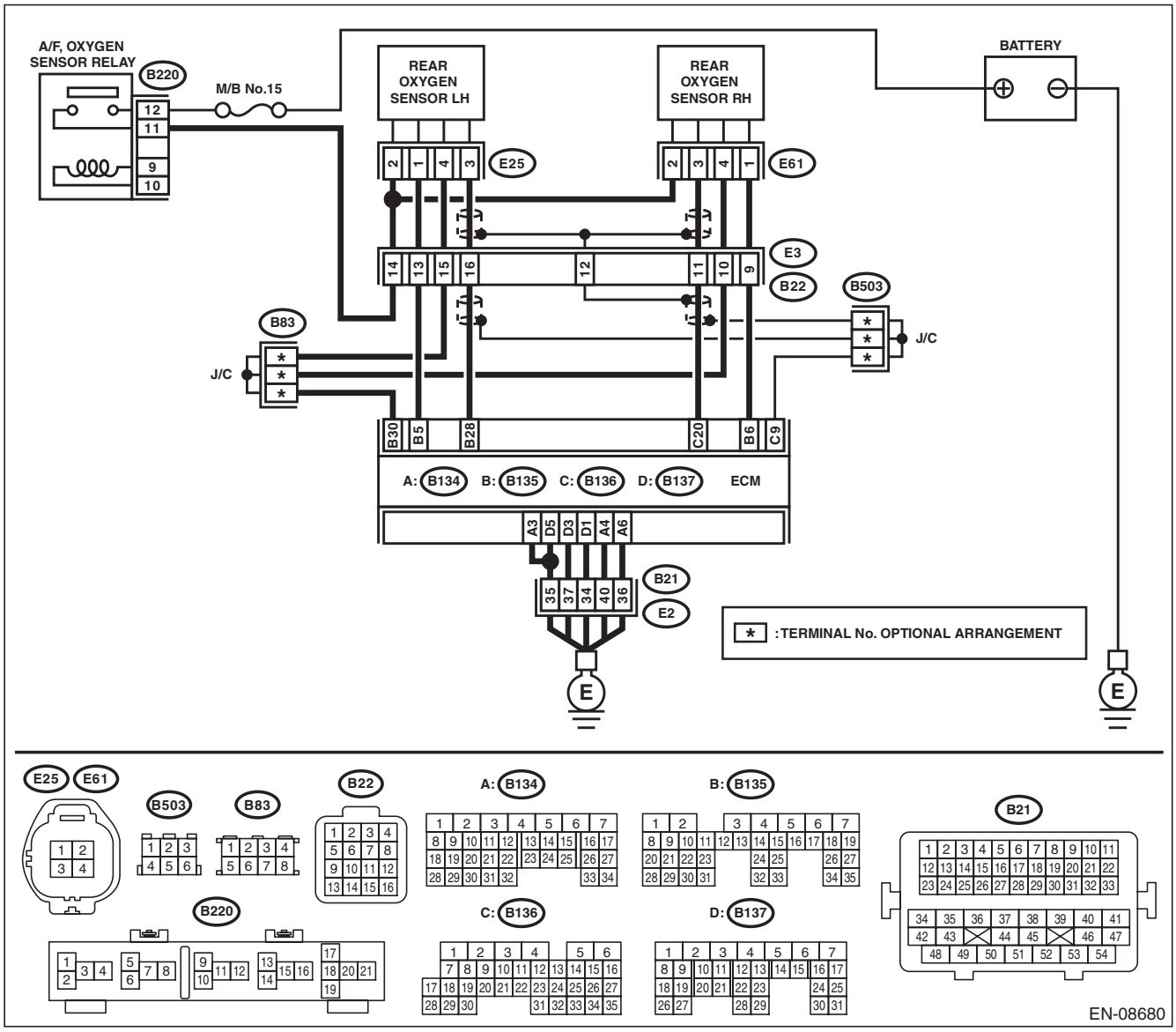

GETtheMANUALS.org

Step		Check	Yes	No
1	**CHECK HARNESS BETWEEN ECM AND REAR OXYGEN SENSOR CONNECTOR.** 1) Turn the ignition switch to OFF. 2) Disconnect the connector from ECM and rear oxygen sensor. 3) Measure the resistance of harness between ECM and rear oxygen sensor connector. ***Connector & terminal*** ***(B136) No. 20 — (E61) No. 3:***	Is the resistance less than 1 Ω?	Go to step **2**.	Repair the harness and connector. NOTE: In this case, repair the following item: • Open circuit in harness between ECM and rear oxygen sensor connector • Poor contact of coupling connector
2	**CHECK HARNESS BETWEEN ECM AND REAR OXYGEN SENSOR CONNECTOR.** Measure the resistance between rear oxygen sensor connector and chassis ground. ***Connector & terminal*** ***(E61) No. 3 — Chassis ground:***	Is the resistance 1 MΩ or more?	Go to step **3**.	Repair the ground short circuit of harness between ECM and rear oxygen sensor connector.
3	**CHECK REAR OXYGEN SENSOR.** Measure the resistance between rear oxygen sensor terminals. ***Terminals*** ***No. 3 — No. 4***	Is the resistance less than 1 Ω?	Replace the rear oxygen sensor. <Ref. to FU(H6DO)-52, Rear Oxygen Sensor.>	Even if DTC is detected, the circuit has returned to a normal condition at this time. Reproduce the failure, and then perform the diagnosis again. NOTE: In this case, temporary poor contact of connector, temporary open or short circuit of harness may be the cause.

AO:DTC P013B O2 SENSOR SLOW RESPONSE - LEAN TO RICH (BANK 1 SENSOR 2)

NOTE:
For the diagnostic procedure, refer to DTC P013A. <Ref. to EN(H6DO)(diag)-159, DTC P013A O2 SENSOR SLOW RESPONSE - RICH TO LEAN (BANK 1 SENSOR 2), Diagnostic Procedure with Diagnostic Trouble Code (DTC).>

GETTHEMANUALS.org

AP:DTC P013C O2 SENSOR SLOW RESPONSE - RICH TO LEAN (BANK 2 SENSOR 2)

DTC DETECTING CONDITION:

- Detected when two consecutive driving cycles with fault occur.
- GENERAL DESCRIPTION <Ref. to GD(H6DO)-80, DTC P013C O2 SENSOR SLOW RESPONSE - RICH TO LEAN (BANK 2 SENSOR 2), Diagnostic Trouble Code (DTC) Detecting Criteria.>

CAUTION:

After servicing or replacing faulty parts, perform Clear Memory Mode <Ref. to EN(H6DO)(diag)-57, OPERATION, Clear Memory Mode.>, and Inspection Mode <Ref. to EN(H6DO)(diag)-44, PROCEDURE, Inspection Mode.>.

WIRING DIAGRAM:

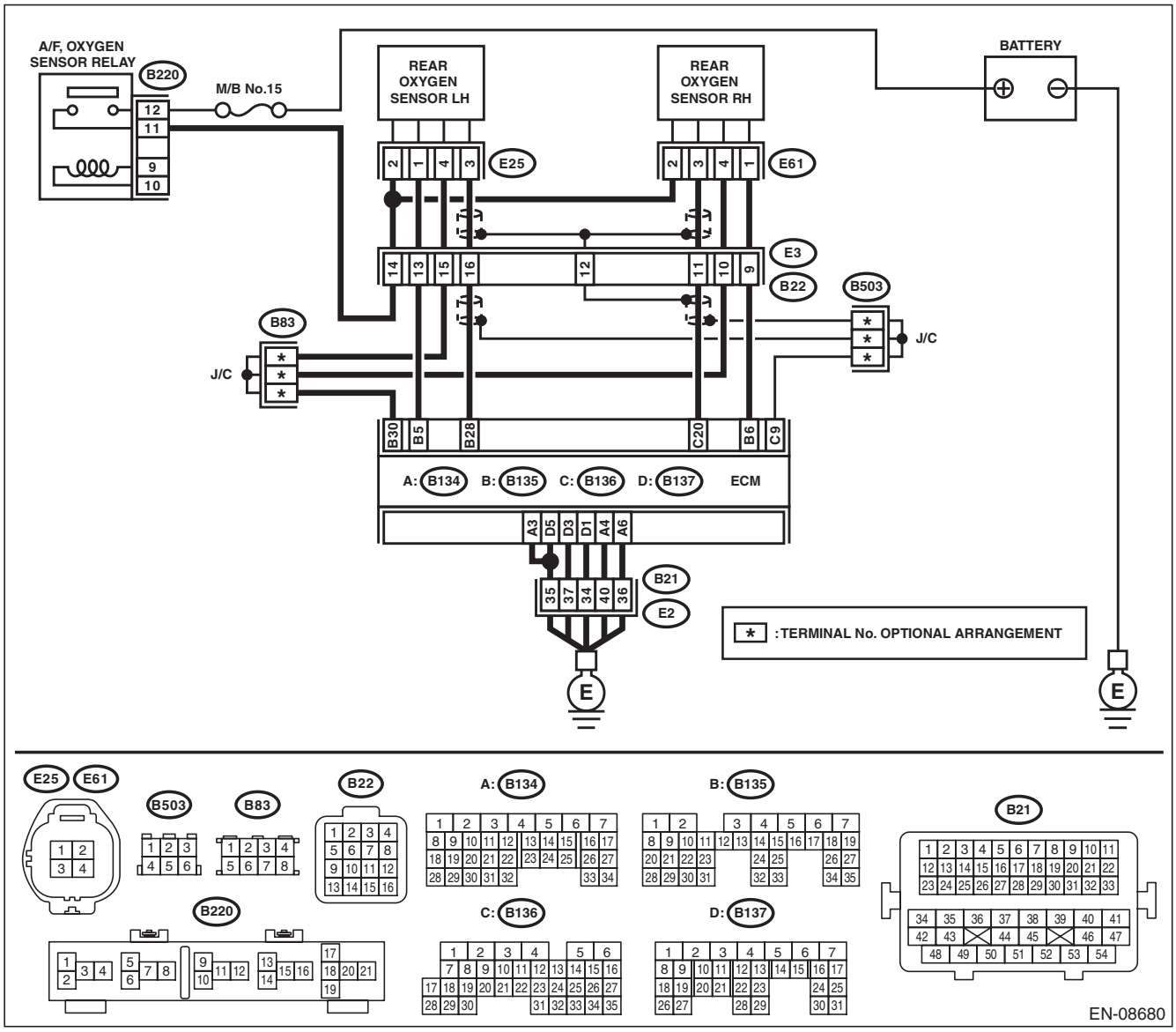

GETtheMANUALS.org

Step		Check	Yes	No
1	**CHECK HARNESS BETWEEN ECM AND REAR OXYGEN SENSOR CONNECTOR.** 1) Turn the ignition switch to OFF. 2) Disconnect the connector from ECM and rear oxygen sensor. 3) Measure the resistance of harness between ECM and rear oxygen sensor connector. ***Connector & terminal*** ***(B135) No. 28 — (E25) No. 3:***	Is the resistance less than 1 Ω?	Go to step **2**.	Repair the harness and connector. NOTE: In this case, repair the following item: • Open circuit in harness between ECM and rear oxygen sensor connector • Poor contact of coupling connector
2	**CHECK HARNESS BETWEEN ECM AND REAR OXYGEN SENSOR CONNECTOR.** Measure the resistance between rear oxygen sensor connector and chassis ground. ***Connector & terminal*** ***(E25) No. 3 — Chassis ground:***	Is the resistance 1 MΩ or more?	Go to step **3**.	Repair the ground short circuit of harness between ECM and rear oxygen sensor connector.
3	**CHECK REAR OXYGEN SENSOR.** Measure the resistance between rear oxygen sensor terminals. ***Terminals*** ***No. 3 — No. 4***	Is the resistance less than 1 Ω?	Replace the rear oxygen sensor. <Ref. to FU(H6DO)-52, Rear Oxygen Sensor.>	Even if DTC is detected, the circuit has returned to a normal condition at this time. Reproduce the failure, and then perform the diagnosis again. NOTE: In this case, temporary poor contact of connector, temporary open or short circuit of harness may be the cause.

AQ:DTC P013D O2 SENSOR SLOW RESPONSE - LEAN TO RICH (BANK 2 SENSOR 2)

NOTE:
For the diagnostic procedure, refer to DTC P013C. <Ref. to EN(H6DO)(diag)-161, DTC P013C O2 SENSOR SLOW RESPONSE - RICH TO LEAN (BANK 2 SENSOR 2), Diagnostic Procedure with Diagnostic Trouble Code (DTC).>

AR:DTC P013E O2 SENSOR DELAYED RESPONSE - RICH TO LEAN (BANK 1 SENSOR 2)

NOTE:
For the diagnostic procedure, refer to DTC P013A. <Ref. to EN(H6DO)(diag)-159, DTC P013A O2 SENSOR SLOW RESPONSE - RICH TO LEAN (BANK 1 SENSOR 2), Diagnostic Procedure with Diagnostic Trouble Code (DTC).>

AS:DTC P013F O2 SENSOR DELAYED RESPONSE - LEAN TO RICH (BANK 1 SENSOR 2)

NOTE:
For the diagnostic procedure, refer to DTC P013A. <Ref. to EN(H6DO)(diag)-159, DTC P013A O2 SENSOR SLOW RESPONSE - RICH TO LEAN (BANK 1 SENSOR 2), Diagnostic Procedure with Diagnostic Trouble Code (DTC).>

GETtheMANUALS.org

AT:DTC P0140 O2 SENSOR CIRCUIT NO ACTIVITY DETECTED (BANK1 SENSOR2)

DTC DETECTING CONDITION:

- Detected when two consecutive driving cycles with fault occur.
- GENERAL DESCRIPTION <Ref. to GD(H6DO)-85, DTC P0140 O2 SENSOR CIRCUIT NO ACTIVITY DETECTED (BANK1 SENSOR2), Diagnostic Trouble Code (DTC) Detecting Criteria.>

CAUTION:

After servicing or replacing faulty parts, perform Clear Memory Mode <Ref. to EN(H6DO)(diag)-57, OPERATION, Clear Memory Mode.>, and Inspection Mode <Ref. to EN(H6DO)(diag)-44, PROCEDURE, Inspection Mode.>.

WIRING DIAGRAM:

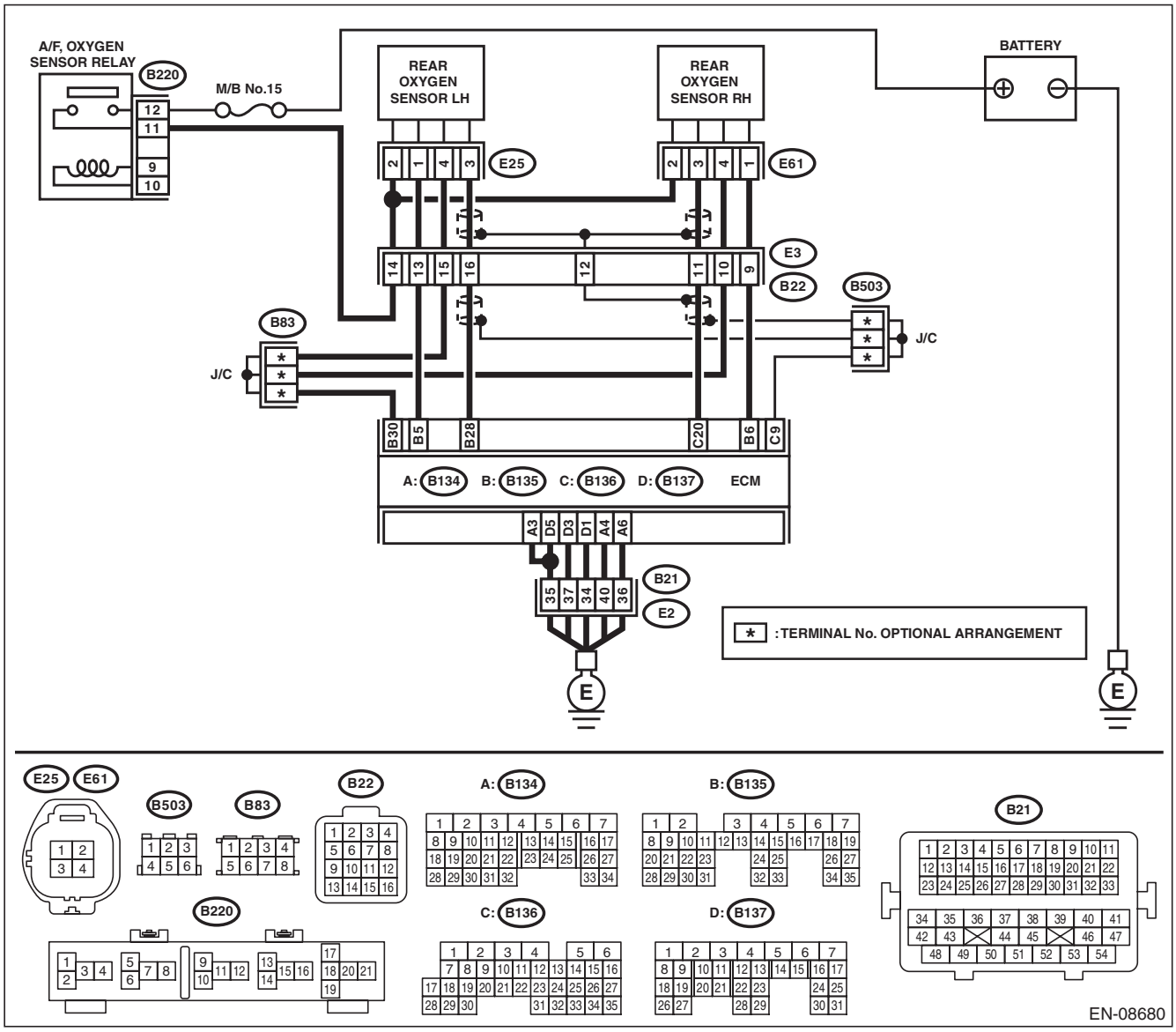

GETtheMANUALS.org

	Step	Check	Yes	No
1	**CHECK REAR OXYGEN SENSOR DATA.** 1) Warm up the engine until engine coolant temperature is higher than 75°C (167°F), and keep the engine speed at 3,000 rpm. (2 minutes maximum) 2) Read the value of «Front O2 Sensor #1» using the Subaru Select Monitor or a general scan tool. NOTE: • Subaru Select Monitor For detailed operation procedures, refer to "READ CURRENT DATA FOR ENGINE". <Ref. to EN(H6DO)(diag)-35, Subaru Select Monitor.> • General scan tool For detailed operation procedures, refer to the general scan tool operation manual.	Is the value of «Front O2 Sensor #1» 0.490 V or more?	Go to step **6**.	Go to step **2**.
2	**CHECK REAR OXYGEN SENSOR DATA.** 1) Warm up the engine until engine coolant temperature is higher than 75°C (167°F), and rapidly reduce the engine speed from 3,000 rpm. 2) Read the value of «Front O2 Sensor #1» using the Subaru Select Monitor or a general scan tool. NOTE: • Subaru Select Monitor For detailed operation procedures, refer to "READ CURRENT DATA FOR ENGINE". <Ref. to EN(H6DO)(diag)-35, Subaru Select Monitor.> • General scan tool For detailed operation procedures, refer to the general scan tool operation manual.	Is the value of «Front O2 Sensor #1» 0.250 V or less?	Go to step **6**.	Go to step **3**.
3	**CHECK REAR OXYGEN SENSOR CONNECTOR AND COUPLING CONNECTOR.**	Has water entered the connector?	Completely remove any water inside.	Go to step **4**.
4	**CHECK HARNESS BETWEEN ECM AND REAR OXYGEN SENSOR CONNECTOR.** 1) Turn the ignition switch to OFF. 2) Disconnect the connector from ECM and rear oxygen sensor. 3) Measure the resistance of harness between ECM and rear oxygen sensor connector. ***Connector & terminal*** ***(B136) No. 20 — (E61) No. 3:*** ***(B135) No. 30 — (E61) No. 4:***	Is the resistance less than 1 Ω?	Go to step **5**.	Repair the harness and connector. NOTE: In this case, repair the following item: • Open circuit in harness between ECM and rear oxygen sensor connector • Poor contact of coupling connector

GETtheMANUALS.org

	Step	Check	Yes	No
5	**CHECK HARNESS BETWEEN ECM AND REAR OXYGEN SENSOR CONNECTOR.** 1) Connect the connector to ECM. 2) Turn the ignition switch to ON. 3) Measure the voltage between rear oxygen sensor connector and chassis ground. ***Connector & terminal*** ***(E61) No. 3 (+) — Chassis ground (–):***	Is the voltage 0.2 — 0.5 V?	Replace the rear oxygen sensor. <Ref. to FU(H6DO)-52, Rear Oxygen Sensor.>	Repair the harness and connector. NOTE: In this case, repair the following item: • Open circuit in harness between ECM and rear oxygen sensor connector • Poor contact of ECM connector • Poor contact of coupling connector
6	**CHECK EXHAUST SYSTEM.** Check exhaust system parts. NOTE: Check the following items. • Looseness and improper fitting of exhaust system parts • Damage (crack, hole etc.) of parts • Loose part and improper installation between front oxygen (A/F) sensor and rear oxygen sensor	Is there any fault in exhaust system?	Repair or replace faulty parts.	Replace the rear oxygen sensor. <Ref. to FU(H6DO)-52, Rear Oxygen Sensor.>

AU:DTC P0141 O2 SENSOR HEATER CIRCUIT (BANK1 SENSOR2)

NOTE:
Refer to DTC P0037 for diagnostic procedure. <Ref. to EN(H6DO)(diag)-109, DTC P0037 HO2S HEATER CONTROL CIRCUIT LOW (BANK 1 SENSOR 2), Diagnostic Procedure with Diagnostic Trouble Code (DTC).>

AV:DTC P014A O2 SENSOR DELAYED RESPONSE - RICH TO LEAN (BANK 2 SENSOR 2)

NOTE:
For the diagnostic procedure, refer to DTC P013C. <Ref. to EN(H6DO)(diag)-161, DTC P013C O2 SENSOR SLOW RESPONSE - RICH TO LEAN (BANK 2 SENSOR 2), Diagnostic Procedure with Diagnostic Trouble Code (DTC).>

AW:DTC P014B O2 SENSOR DELAYED RESPONSE - LEAN TO RICH (BANK 2 SENSOR 2)

NOTE:
For the diagnostic procedure, refer to DTC P013C. <Ref. to EN(H6DO)(diag)-161, DTC P013C O2 SENSOR SLOW RESPONSE - RICH TO LEAN (BANK 2 SENSOR 2), Diagnostic Procedure with Diagnostic Trouble Code (DTC).>

GETTHEMANUALS.org

AX:DTC P014C O2 SENSOR SLOW RESPONSE - RICH TO LEAN (BANK 1 SENSOR 1)

DTC DETECTING CONDITION:

- Detected when two consecutive driving cycles with fault occur.
- GENERAL DESCRIPTION <Ref. to GD(H6DO)-90, DTC P014C O2 SENSOR SLOW RESPONSE - RICH TO LEAN (BANK 1 SENSOR 1), Diagnostic Trouble Code (DTC) Detecting Criteria.>

CAUTION:

After servicing or replacing faulty parts, perform Clear Memory Mode <Ref. to EN(H6DO)(diag)-57, OPERATION, Clear Memory Mode.>, and Inspection Mode <Ref. to EN(H6DO)(diag)-44, PROCEDURE, Inspection Mode.>.

	Step	Check	Yes	No
1	**CHECK EXHAUST SYSTEM.** NOTE: Check the following items. • Loose installation of front portion of exhaust pipe onto cylinder heads • Loose connection between front exhaust pipe and front catalytic converter • Damage of exhaust pipe resulting in a hole	Is there any fault in exhaust system?	Repair the exhaust system.	Replace the front oxygen (A/F) sensor. <Ref. to FU(H6DO)-50, Front Oxygen (A/F) Sensor.>

AY:DTC P014D O2 SENSOR SLOW RESPONSE - LEAN TO RICH (BANK 1 SENSOR 1)

NOTE:
For the diagnostic procedure, refer to DTC P014C. <Ref. to EN(H6DO)(diag)-166, DTC P014C O2 SENSOR SLOW RESPONSE - RICH TO LEAN (BANK 1 SENSOR 1), Diagnostic Procedure with Diagnostic Trouble Code (DTC).>

GETTHEMANUALS.org

AZ:DTC P014E O2 SENSOR SLOW RESPONSE - RICH TO LEAN (BANK 2 SENSOR 1)

DTC DETECTING CONDITION:

- Detected when two consecutive driving cycles with fault occur.
- GENERAL DESCRIPTION <Ref. to GD(H6DO)-93, DTC P014E O2 SENSOR SLOW RESPONSE - RICH TO LEAN (BANK 2 SENSOR 1), Diagnostic Trouble Code (DTC) Detecting Criteria.>

CAUTION:

After servicing or replacing faulty parts, perform Clear Memory Mode <Ref. to EN(H6DO)(diag)-57, OPERATION, Clear Memory Mode.>, and Inspection Mode <Ref. to EN(H6DO)(diag)-44, PROCEDURE, Inspection Mode.>.

	Step	Check	Yes	No
1	**CHECK EXHAUST SYSTEM.** NOTE: Check the following items. • Loose installation of front portion of exhaust pipe onto cylinder heads • Loose connection between front exhaust pipe and front catalytic converter • Damage of exhaust pipe resulting in a hole	Is there any fault in exhaust system?	Repair the exhaust system.	Replace the front oxygen (A/F) sensor. <Ref. to FU(H6DO)-50, Front Oxygen (A/F) Sensor.>

BA:DTC P014F O2 SENSOR SLOW RESPONSE - LEAN TO RICH (BANK 2 SENSOR 1)

NOTE:
For the diagnostic procedure, refer to DTC P014E. <Ref. to EN(H6DO)(diag)-167, DTC P014E O2 SENSOR SLOW RESPONSE - RICH TO LEAN (BANK 2 SENSOR 1), Diagnostic Procedure with Diagnostic Trouble Code (DTC).>

GETtheMANUALS.org

BB:DTC P0151 O2 SENSOR CIRCUIT LOW VOLTAGE (BANK 2 SENSOR 1)

DTC DETECTING CONDITION:

- Immediately at fault recognition
- GENERAL DESCRIPTION <Ref. to GD(H6DO)-93, DTC P0151 O2 SENSOR CIRCUIT LOW VOLTAGE (BANK 2 SENSOR 1), Diagnostic Trouble Code (DTC) Detecting Criteria.>

CAUTION:

After servicing or replacing faulty parts, perform Clear Memory Mode <Ref. to EN(H6DO)(diag)-57, OPERATION, Clear Memory Mode.>, and Inspection Mode <Ref. to EN(H6DO)(diag)-44, PROCEDURE, Inspection Mode.>.

WIRING DIAGRAM:

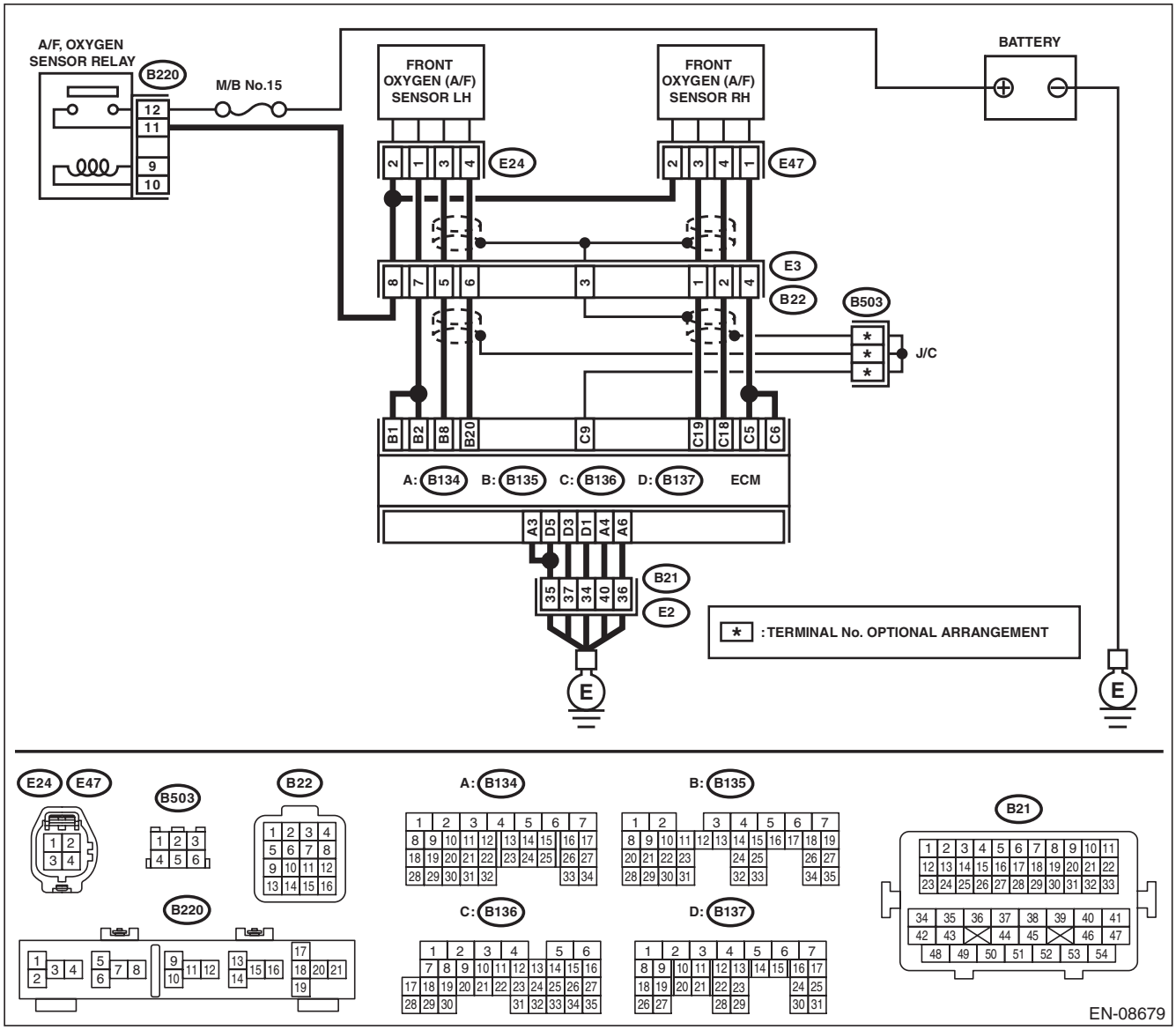

Step		Check	Yes	No
1	**CHECK FRONT OXYGEN (A/F) SENSOR CONNECTOR AND COUPLING CONNECTOR.**	Has water entered the connector?	Completely remove any water inside.	Go to step **2**.

GETTHEMANUALS.org

Step		Check	Yes	No
2	**CHECK HARNESS BETWEEN ECM AND FRONT OXYGEN (A/F) SENSOR CONNECTOR.** 1) Turn the ignition switch to OFF. 2) Disconnect the connectors from ECM and front oxygen (A/F) sensor connector. 3) Measure the resistance between ECM and chassis ground. ***Connector & terminal*** ***(B135) No. 8 — Chassis ground:*** ***(B135) No. 20 — Chassis ground:***	Is the resistance 1 MΩ or more?	Go to step **3**.	Repair the ground short circuit of harness between ECM and front oxygen (A/F) sensor connector.
3	**CHECK FOR POOR CONTACT.** Check for poor contact of the front oxygen (A/F) sensor connector.	Is there poor contact of front oxygen (A/F) sensor connector?	Repair the poor contact of front oxygen (A/F) sensor connector.	Replace the front oxygen (A/F) sensor. <Ref. to FU(H6DO)-50, Front Oxygen (A/F) Sensor.>

GETthemMANUALS.org

BC:DTC P0152 O2 SENSOR CIRCUIT HIGH VOLTAGE (BANK 2 SENSOR 1)

DTC DETECTING CONDITION:

- Immediately at fault recognition
- GENERAL DESCRIPTION <Ref. to GD(H6DO)-93, DTC P0152 O2 SENSOR CIRCUIT HIGH VOLTAGE (BANK 2 SENSOR 1), Diagnostic Trouble Code (DTC) Detecting Criteria.>

CAUTION:

After servicing or replacing faulty parts, perform Clear Memory Mode <Ref. to EN(H6DO)(diag)-57, OPERATION, Clear Memory Mode.>, and Inspection Mode <Ref. to EN(H6DO)(diag)-44, PROCEDURE, Inspection Mode.>.

WIRING DIAGRAM:

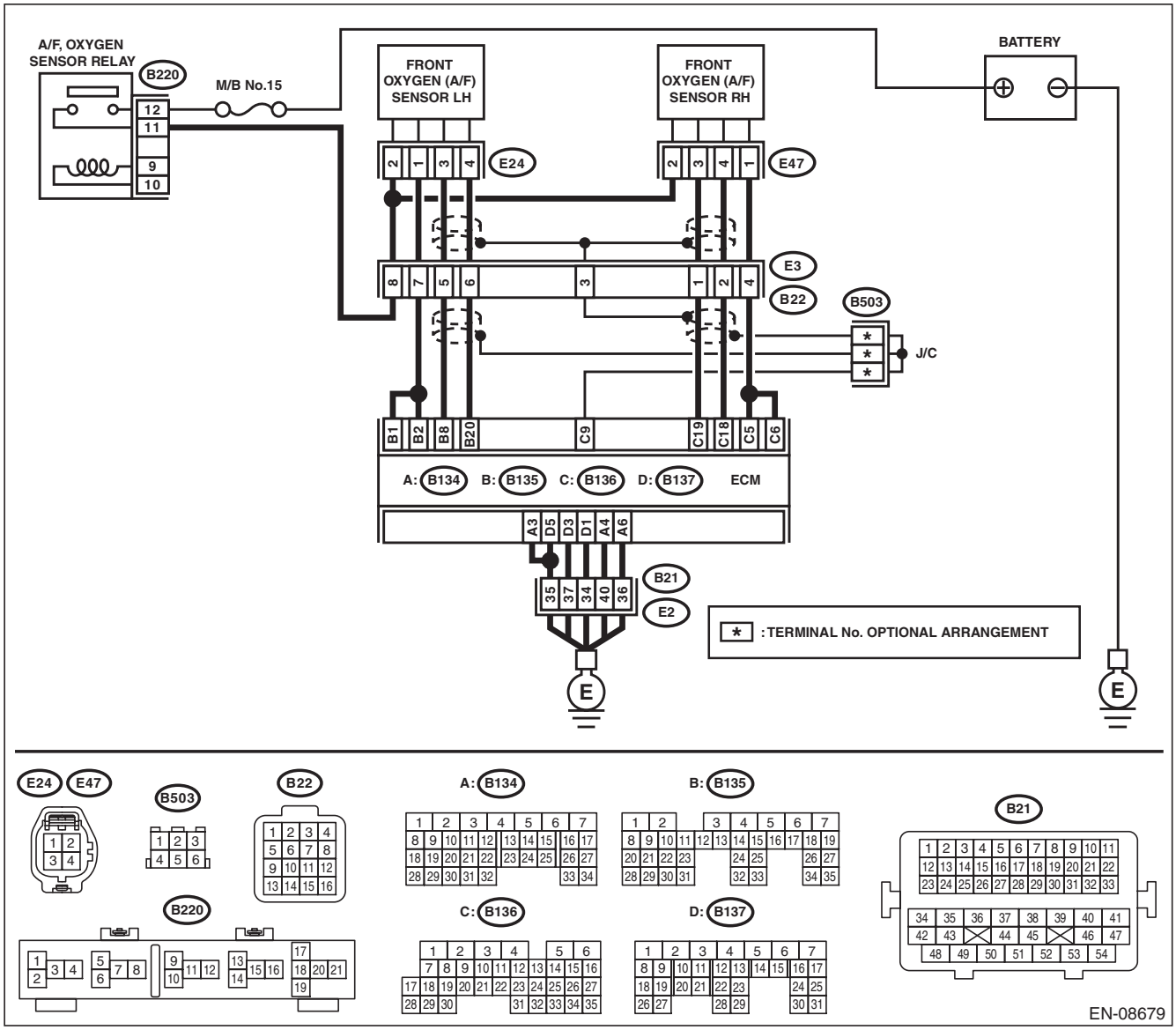

Step		Check	Yes	No
1	**CHECK FRONT OXYGEN (A/F) SENSOR CONNECTOR AND COUPLING CONNECTOR.**	Has water entered the connector?	Completely remove any water inside.	Go to step **2**.

GETTHEMANUALS.org

Step		Check	Yes	No
2	**CHECK HARNESS BETWEEN ECM AND FRONT OXYGEN (A/F) SENSOR CONNECTOR.** 1) Turn the ignition switch to OFF. 2) Disconnect the connectors from front oxygen (A/F) sensor. 3) Turn the ignition switch to ON. 4) Measure the voltage between ECM and chassis ground. ***Connector & terminal*** ***(B135) No. 8 (+) — Chassis ground (–):*** ***(B135) No. 20 (+) — Chassis ground (–):***	Is the voltage 8 V or more?	Repair the short circuit to power in the harness between ECM and front oxygen (A/F) sensor connector.	Replace the front oxygen (A/F) sensor. <Ref. to FU(H6DO)-50, Front Oxygen (A/F) Sensor.>

GETTHEMANUALS.org

BD:DTC P0154 O2 SENSOR CIRCUIT NO ACTIVITY DETECTED (BANK 2 SENSOR 1)

DTC DETECTING CONDITION:

- Immediately at fault recognition
- GENERAL DESCRIPTION <Ref. to GD(H6DO)-93, DTC P0154 O2 SENSOR CIRCUIT NO ACTIVITY DETECTED (BANK 2 SENSOR 1), Diagnostic Trouble Code (DTC) Detecting Criteria.>

CAUTION:

After servicing or replacing faulty parts, perform Clear Memory Mode <Ref. to EN(H6DO)(diag)-57, OPERATION, Clear Memory Mode.>, and Inspection Mode <Ref. to EN(H6DO)(diag)-44, PROCEDURE, Inspection Mode.>.

WIRING DIAGRAM:

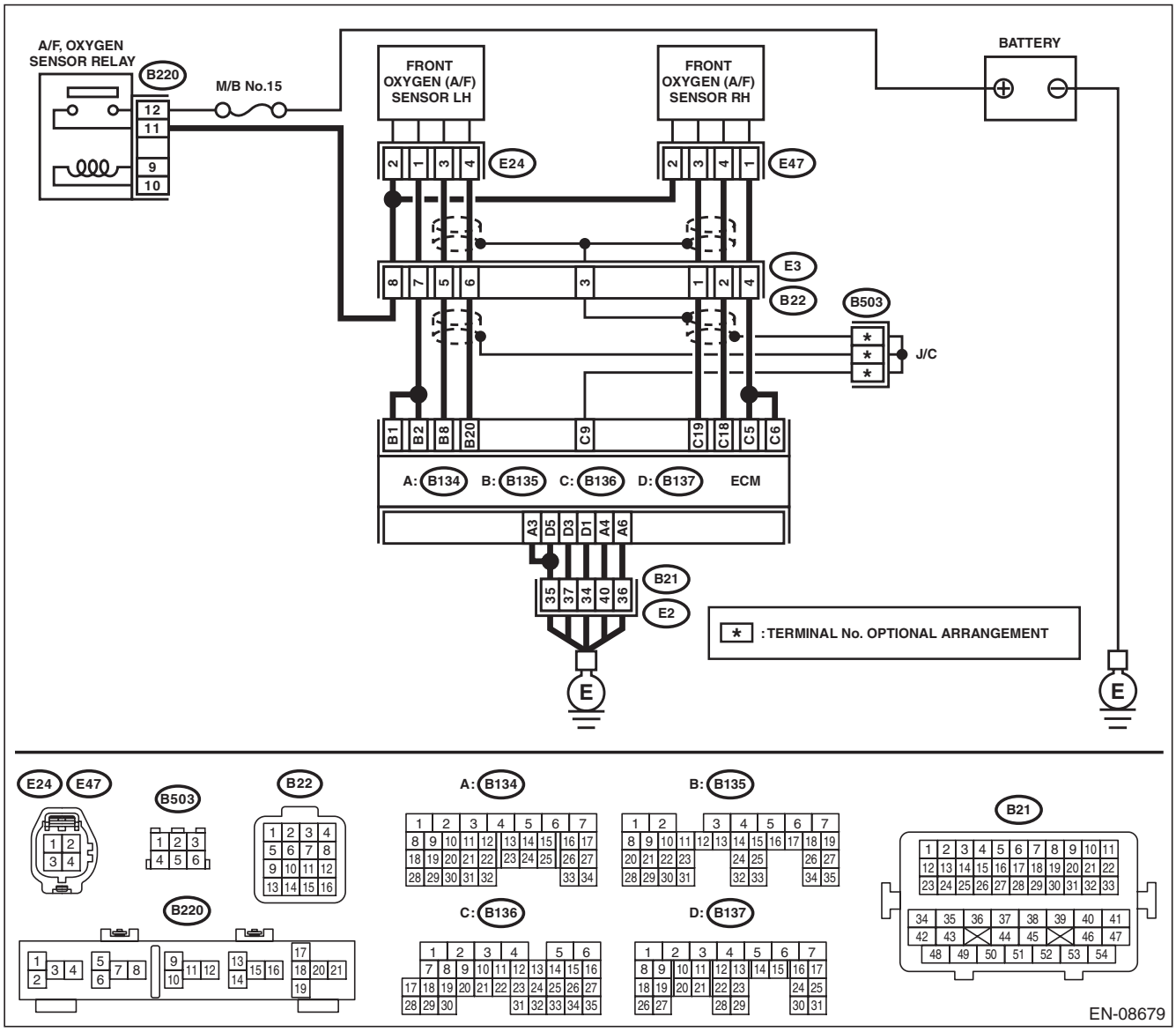

GET THE MANUALS.org

	Step	Check	Yes	No
1	**CHECK HARNESS BETWEEN ECM AND FRONT OXYGEN (A/F) SENSOR CONNECTOR.** 1) Turn the ignition switch to OFF. 2) Disconnect the connectors from ECM and front oxygen (A/F) sensor connector. 3) Measure the resistance of harness between ECM and front oxygen (A/F) sensor connector. ***Connector & terminal*** ***(B135) No. 8 — (E24) No. 3:*** ***(B135) No. 20 — (E24) No. 4:***	Is the resistance less than 1 Ω?	Go to step **2**.	Repair the harness and connector. NOTE: In this case, repair the following item: • Open circuit in harness between ECM and front oxygen (A/F) sensor connector • Poor contact of coupling connector
2	**CHECK FOR POOR CONTACT.** Check for poor contact of ECM and front oxygen (A/F) sensor connector.	Is there poor contact of ECM or front oxygen (A/F) sensor connector?	Repair the poor contact of ECM or front oxygen (A/F) sensor connector.	Replace the front oxygen (A/F) sensor. <Ref. to FU(H6DO)-50, Front Oxygen (A/F) Sensor.>

GETTHEMANUALS.org

BE:DTC P0157 O2 SENSOR CIRCUIT LOW VOLTAGE (BANK 2 SENSOR 2)

DTC DETECTING CONDITION:

- Detected when two consecutive driving cycles with fault occur.
- GENERAL DESCRIPTION <Ref. to GD(H6DO)-93, DTC P0157 O2 SENSOR CIRCUIT LOW VOLTAGE (BANK 2 SENSOR 2), Diagnostic Trouble Code (DTC) Detecting Criteria.>

CAUTION:

After servicing or replacing faulty parts, perform Clear Memory Mode <Ref. to EN(H6DO)(diag)-57, OPERATION, Clear Memory Mode.>, and Inspection Mode <Ref. to EN(H6DO)(diag)-44, PROCEDURE, Inspection Mode.>.

WIRING DIAGRAM:

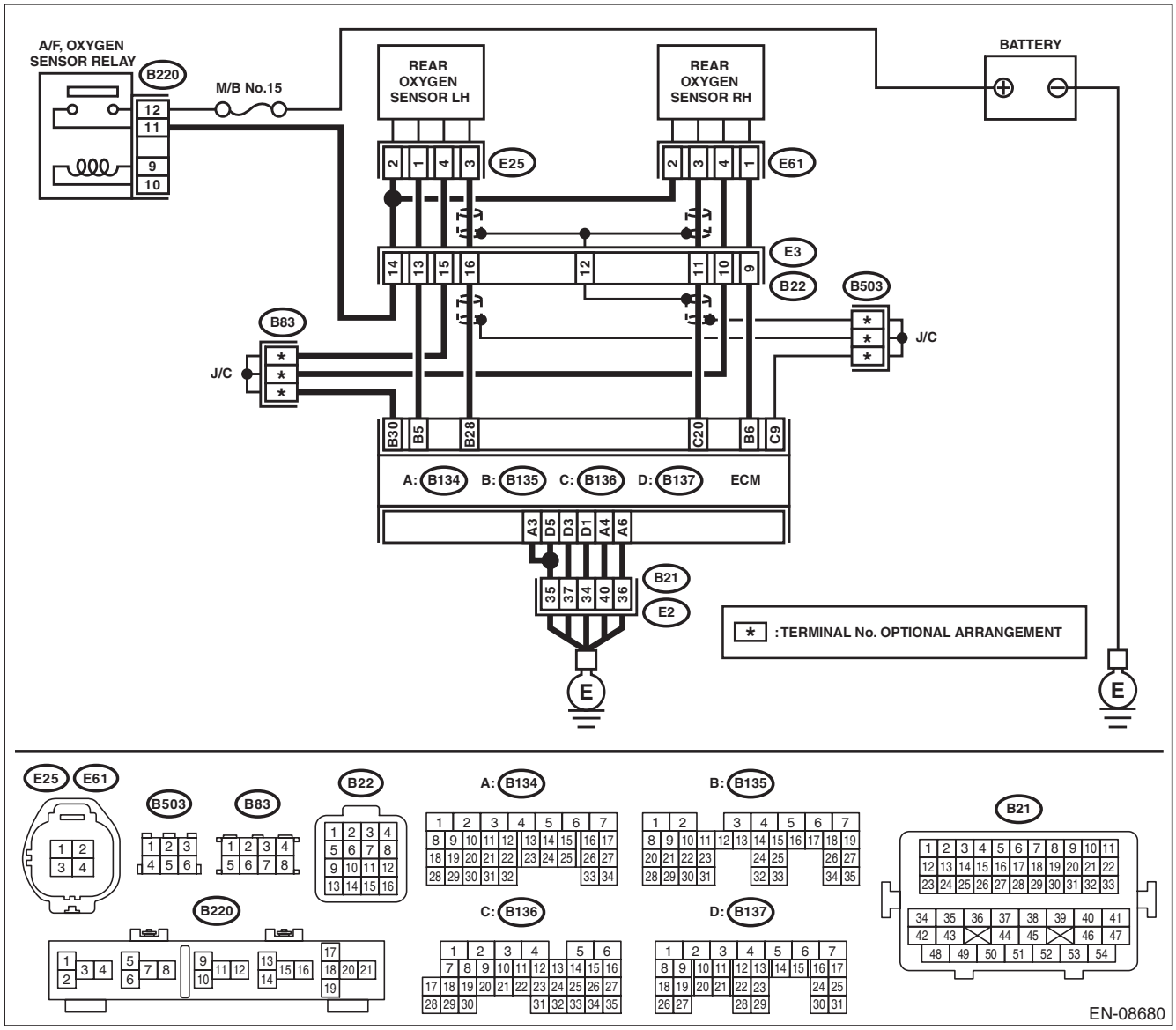

GETTHEMANUALS.org

	Step	Check	Yes	No
1	**CHECK REAR OXYGEN SENSOR DATA.** 1) Warm up the engine until engine coolant temperature is higher than 75°C (167°F), and keep the engine speed at 3,000 rpm. (2 minutes maximum) 2) Read the value of «Front O2 Sensor #2» using the Subaru Select Monitor or a general scan tool. NOTE: • Subaru Select Monitor For detailed operation procedures, refer to "READ CURRENT DATA FOR ENGINE". <Ref. to EN(H6DO)(diag)-35, Subaru Select Monitor.> • General scan tool For detailed operation procedures, refer to the general scan tool operation manual.	Is the value of «Front O2 Sensor #2» 0.490 V or more?	Go to step **5**.	Go to step **2**.
2	**CHECK REAR OXYGEN SENSOR CONNECTOR AND COUPLING CONNECTOR.**	Has water entered the connector?	Completely remove any water inside.	Go to step **3**.
3	**CHECK HARNESS BETWEEN ECM AND REAR OXYGEN SENSOR CONNECTOR.** 1) Turn the ignition switch to OFF. 2) Disconnect the connector from ECM and rear oxygen sensor. 3) Measure the resistance of harness between ECM and rear oxygen sensor connector. ***Connector & terminal*** ***(B135) No. 28 — (E25) No. 3:*** ***(B135) No. 30 — (E25) No. 4:***	Is the resistance less than 1 Ω?	Go to step **4**.	Repair the harness and connector. NOTE: In this case, repair the following item: • Open circuit in harness between ECM and rear oxygen sensor connector • Poor contact of coupling connector
4	**CHECK HARNESS BETWEEN ECM AND REAR OXYGEN SENSOR CONNECTOR.** 1) Connect the connector to ECM. 2) Turn the ignition switch to ON. 3) Measure the voltage between rear oxygen sensor connector and chassis ground. ***Connector & terminal*** ***(E25) No. 3 (+) — Chassis ground (–):***	Is the voltage 0.2 — 0.5 V?	Replace the rear oxygen sensor. <Ref. to FU(H6DO)-52, Rear Oxygen Sensor.>	Repair the harness and connector. NOTE: In this case, repair the following item: • Open circuit in harness between ECM and rear oxygen sensor connector • Poor contact of ECM connector • Poor contact of coupling connector
5	**CHECK EXHAUST SYSTEM.** Check exhaust system parts. NOTE: Check the following items. • Looseness and improper fitting of exhaust system parts • Damage (crack, hole etc.) of parts • Loose part and improper installation between front oxygen (A/F) sensor and rear oxygen sensor	Is there any fault in exhaust system?	Repair or replace faulty parts.	Replace the rear oxygen sensor. <Ref. to FU(H6DO)-52, Rear Oxygen Sensor.>

GETTHEMANUALS.org

BF:DTC P0158 O2 SENSOR CIRCUIT HIGH VOLTAGE (BANK 2 SENSOR 2)

DTC DETECTING CONDITION:

- Detected when two consecutive driving cycles with fault occur.
- GENERAL DESCRIPTION <Ref. to GD(H6DO)-94, DTC P0158 O2 SENSOR CIRCUIT HIGH VOLTAGE (BANK 2 SENSOR 2), Diagnostic Trouble Code (DTC) Detecting Criteria.>

CAUTION:

After servicing or replacing faulty parts, perform Clear Memory Mode <Ref. to EN(H6DO)(diag)-57, OPERATION, Clear Memory Mode.>, and Inspection Mode <Ref. to EN(H6DO)(diag)-44, PROCEDURE, Inspection Mode.>.

WIRING DIAGRAM:

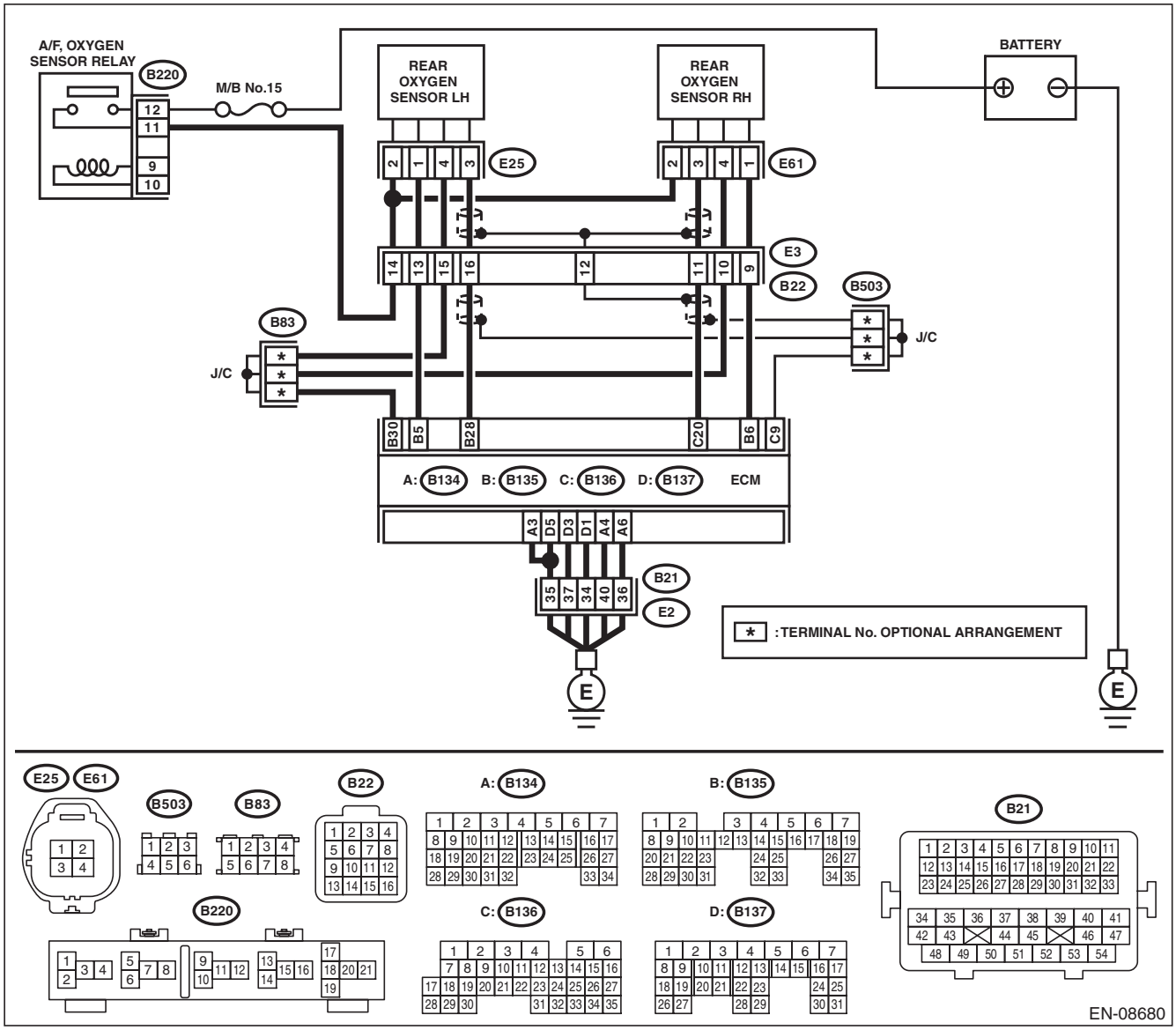

GETTHEMANUALS.org

	Step	Check	Yes	No
1	**CHECK REAR OXYGEN SENSOR DATA.** 1) Warm up the engine until engine coolant temperature is higher than 75°C (167°F), and rapidly reduce the engine speed from 3,000 rpm. 2) Read the value of «Front O2 Sensor #2» using the Subaru Select Monitor or a general scan tool. NOTE: • Subaru Select Monitor For detailed operation procedures, refer to "READ CURRENT DATA FOR ENGINE". <Ref. to EN(H6DO)(diag)-35, Subaru Select Monitor.> • General scan tool For detailed operation procedures, refer to the general scan tool operation manual.	Is the value of «Front O2 Sensor #2» 0.250 V or less?	Go to step **5**.	Go to step **2**.
2	**CHECK REAR OXYGEN SENSOR CONNECTOR AND COUPLING CONNECTOR.**	Has water entered the connector?	Completely remove any water inside.	Go to step **3**.
3	**CHECK HARNESS BETWEEN ECM AND REAR OXYGEN SENSOR CONNECTOR.** 1) Turn the ignition switch to OFF. 2) Disconnect the connector from ECM and rear oxygen sensor. 3) Measure the resistance of harness between ECM and rear oxygen sensor connector. ***Connector & terminal*** ***(B135) No. 28 — (E25) No. 3:*** ***(B135) No. 30 — (E25) No. 4:***	Is the resistance less than 1 Ω?	Go to step **4**.	Repair the harness and connector. NOTE: In this case, repair the following item: • Open circuit in harness between ECM and rear oxygen sensor connector • Poor contact of coupling connector
4	**CHECK HARNESS BETWEEN ECM AND REAR OXYGEN SENSOR CONNECTOR.** 1) Connect the connector to ECM. 2) Turn the ignition switch to ON. 3) Measure the voltage between rear oxygen sensor connector and chassis ground. ***Connector & terminal*** ***(E25) No. 3 (+) — Chassis ground (–):***	Is the voltage 0.2 — 0.5 V?	Replace the rear oxygen sensor. <Ref. to FU(H6DO)-52, Rear Oxygen Sensor.>	Repair the harness and connector. NOTE: In this case, repair the following item: • Open circuit in harness between ECM and rear oxygen sensor connector • Poor contact of ECM connector • Poor contact of coupling connector
5	**CHECK EXHAUST SYSTEM.** Check exhaust system parts. NOTE: Check the following items. • Looseness and improper fitting of exhaust system parts • Damage (crack, hole etc.) of parts • Loose part and improper installation between front oxygen (A/F) sensor and rear oxygen sensor	Is there any fault in exhaust system?	Repair or replace faulty parts.	Replace the rear oxygen sensor. <Ref. to FU(H6DO)-52, Rear Oxygen Sensor.>

GETtheMANUALS.org

BG:DTC P015A O2 SENSOR DELAYED RESPONSE - RICH TO LEAN (BANK 1 SENSOR 1)

NOTE:
For the diagnostic procedure, refer to DTC P014C. <Ref. to EN(H6DO)(diag)-166, DTC P014C O2 SENSOR SLOW RESPONSE - RICH TO LEAN (BANK 1 SENSOR 1), Diagnostic Procedure with Diagnostic Trouble Code (DTC).>

BH:DTC P015B O2 SENSOR DELAYED RESPONSE - LEAN TO RICH (BANK 1 SENSOR 1)

NOTE:
For the diagnostic procedure, refer to DTC P014C. <Ref. to EN(H6DO)(diag)-166, DTC P014C O2 SENSOR SLOW RESPONSE - RICH TO LEAN (BANK 1 SENSOR 1), Diagnostic Procedure with Diagnostic Trouble Code (DTC).>

BI: DTC P015C O2 SENSOR DELAYED RESPONSE - RICH TO LEAN (BANK 2 SENSOR 1)

NOTE:
For the diagnostic procedure, refer to DTC P014E. <Ref. to EN(H6DO)(diag)-167, DTC P014E O2 SENSOR SLOW RESPONSE - RICH TO LEAN (BANK 2 SENSOR 1), Diagnostic Procedure with Diagnostic Trouble Code (DTC).>

BJ:DTC P015D O2 SENSOR DELAYED RESPONSE - LEAN TO RICH (BANK 2 SENSOR 1)

NOTE:
For the diagnostic procedure, refer to DTC P014E. <Ref. to EN(H6DO)(diag)-167, DTC P014E O2 SENSOR SLOW RESPONSE - RICH TO LEAN (BANK 2 SENSOR 1), Diagnostic Procedure with Diagnostic Trouble Code (DTC).>

GETthemMANUALS.org

BK:DTC P0160 O2 SENSOR CIRCUIT NO ACTIVITY DETECTED (BANK2 SENSOR2)

DTC DETECTING CONDITION:

- Detected when two consecutive driving cycles with fault occur.
- GENERAL DESCRIPTION <Ref. to GD(H6DO)-99, DTC P0160 O2 SENSOR CIRCUIT NO ACTIVITY DETECTED (BANK2 SENSOR2), Diagnostic Trouble Code (DTC) Detecting Criteria.>

CAUTION:

After servicing or replacing faulty parts, perform Clear Memory Mode <Ref. to EN(H6DO)(diag)-57, OPERATION, Clear Memory Mode.>, and Inspection Mode <Ref. to EN(H6DO)(diag)-44, PROCEDURE, Inspection Mode.>.

WIRING DIAGRAM:

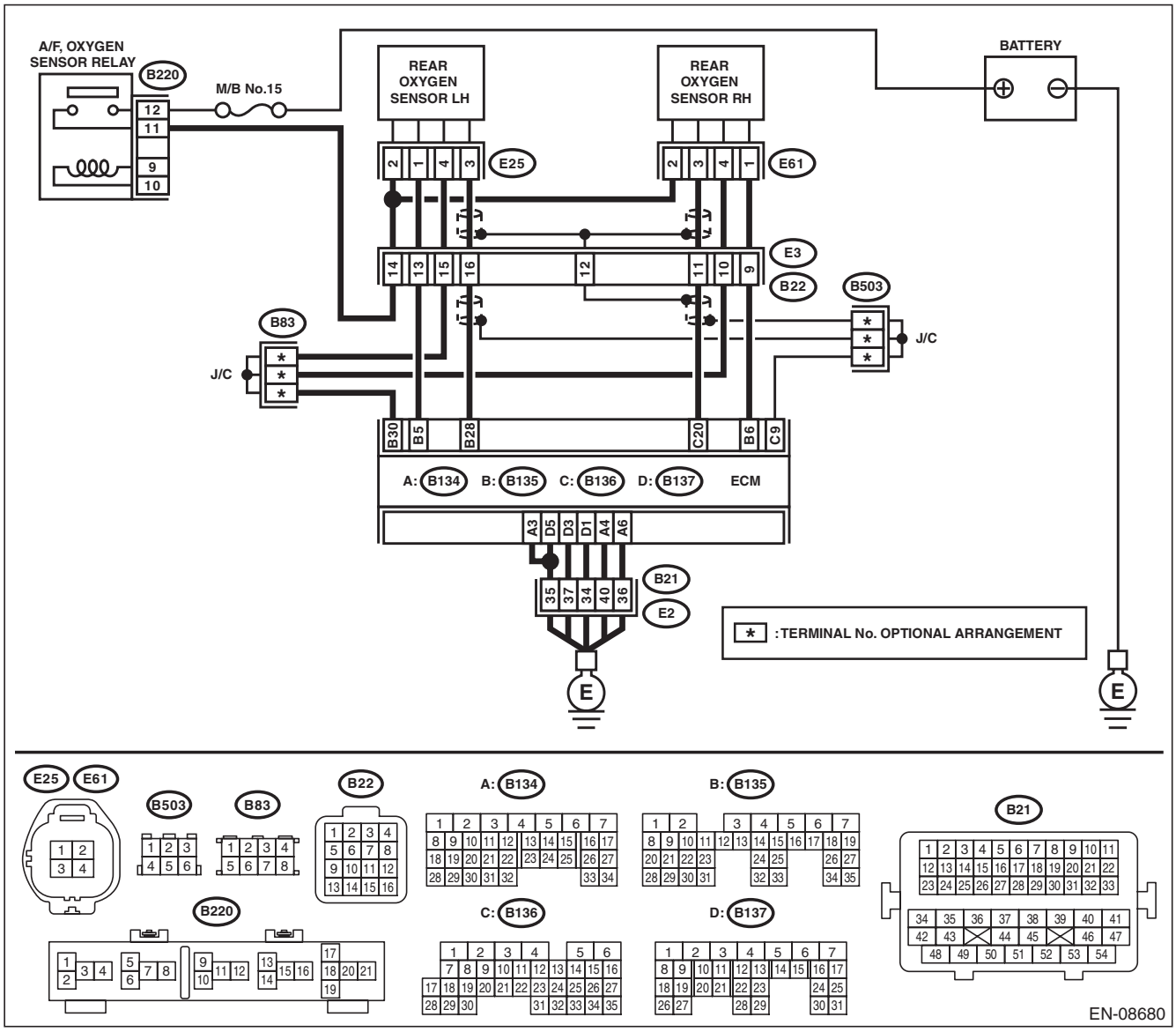

GET THEM MANUALS.org

	Step	Check	Yes	No
1	**CHECK REAR OXYGEN SENSOR DATA.** 1) Warm up the engine until engine coolant temperature is higher than 75°C (167°F), and keep the engine speed at 3,000 rpm. (2 minutes maximum) 2) Read the value of «Front O2 Sensor #2» using the Subaru Select Monitor or a general scan tool. NOTE: • Subaru Select Monitor For detailed operation procedures, refer to "READ CURRENT DATA FOR ENGINE". <Ref. to EN(H6DO)(diag)-35, Subaru Select Monitor.> • General scan tool For detailed operation procedures, refer to the general scan tool operation manual.	Is the value of «Front O2 Sensor #2» 0.490 V or more?	Go to step **6**.	Go to step **2**.
2	**CHECK REAR OXYGEN SENSOR DATA.** 1) Warm up the engine until engine coolant temperature is higher than 75°C (167°F), and rapidly reduce the engine speed from 3,000 rpm. 2) Read the value of «Front O2 Sensor #2» using the Subaru Select Monitor or a general scan tool. NOTE: • Subaru Select Monitor For detailed operation procedures, refer to "READ CURRENT DATA FOR ENGINE". <Ref. to EN(H6DO)(diag)-35, Subaru Select Monitor.> • General scan tool For detailed operation procedures, refer to the general scan tool operation manual.	Is the value of «Front O2 Sensor #2» 0.250 V or less?	Go to step **6**.	Go to step **3**.
3	**CHECK REAR OXYGEN SENSOR CONNECTOR AND COUPLING CONNECTOR.**	Has water entered the connector?	Completely remove any water inside.	Go to step **4**.
4	**CHECK HARNESS BETWEEN ECM AND REAR OXYGEN SENSOR CONNECTOR.** 1) Turn the ignition switch to OFF. 2) Disconnect the connector from ECM and rear oxygen sensor. 3) Measure the resistance of harness between ECM and rear oxygen sensor connector. ***Connector & terminal*** ***(B135) No. 28 — (E25) No. 3:*** ***(B135) No. 30 — (E25) No. 4:***	Is the resistance less than 1 Ω?	Go to step **5**.	Repair the harness and connector. NOTE: In this case, repair the following item: • Open circuit in harness between ECM and rear oxygen sensor connector • Poor contact of coupling connector

GETtheMANUALS.org

	Step	Check	Yes	No
5	**CHECK HARNESS BETWEEN ECM AND REAR OXYGEN SENSOR CONNECTOR.** 1) Connect the connector to ECM. 2) Turn the ignition switch to ON. 3) Measure the voltage between rear oxygen sensor connector and chassis ground. ***Connector & terminal*** ***(E25) No. 3 (+) — Chassis ground (–):***	Is the voltage 0.2 — 0.5 V?	Replace the rear oxygen sensor. <Ref. to FU(H6DO)-52, Rear Oxygen Sensor.>	Repair the harness and connector. NOTE: In this case, repair the following item: • Open circuit in harness between ECM and rear oxygen sensor connector • Poor contact of ECM connector • Poor contact of coupling connector
6	**CHECK EXHAUST SYSTEM.** Check exhaust system parts. NOTE: Check the following items. • Looseness and improper fitting of exhaust system parts • Damage (crack, hole etc.) of parts • Loose part and improper installation between front oxygen (A/F) sensor and rear oxygen sensor	Is there any fault in exhaust system?	Repair or replace faulty parts.	Replace the rear oxygen sensor. <Ref. to FU(H6DO)-52, Rear Oxygen Sensor.>

BL:DTC P0161 O2 SENSOR HEATER CIRCUIT (BANK2 SENSOR2)

NOTE:
Refer to DTC P0057 for diagnostic procedure. <Ref. to EN(H6DO)(diag)-119, DTC P0057 HO2S HEATER CONTROL CIRCUIT LOW (BANK 2 SENSOR 2), Diagnostic Procedure with Diagnostic Trouble Code (DTC).>

BM:DTC P0171 SYSTEM TOO LEAN (BANK 1)

NOTE:
Refer to DTC P0175 for diagnostic procedure. <Ref. to EN(H6DO)(diag)-182, DTC P0175 SYSTEM TOO RICH (BANK 2), Diagnostic Procedure with Diagnostic Trouble Code (DTC).>

BN:DTC P0172 SYSTEM TOO RICH (BANK 1)

NOTE:
Refer to DTC P0175 for diagnostic procedure. <Ref. to EN(H6DO)(diag)-182, DTC P0175 SYSTEM TOO RICH (BANK 2), Diagnostic Procedure with Diagnostic Trouble Code (DTC).>

BO:DTC P0174 SYSTEM TOO LEAN (BANK 2)

NOTE:
Refer to DTC P0175 for diagnostic procedure. <Ref. to EN(H6DO)(diag)-182, DTC P0175 SYSTEM TOO RICH (BANK 2), Diagnostic Procedure with Diagnostic Trouble Code (DTC).>

GETthemMANUALS.org

BP:DTC P0175 SYSTEM TOO RICH (BANK 2)

DTC DETECTING CONDITION:

- Detected when two consecutive driving cycles with fault occur.
- GENERAL DESCRIPTION <Ref. to GD(H6DO)-103, DTC P0175 SYSTEM TOO RICH (BANK 2), Diagnostic Trouble Code (DTC) Detecting Criteria.>

TROUBLE SYMPTOM:

- Improper idling
- Engine stalls.
- Poor driving performance

CAUTION:

After servicing or replacing faulty parts, perform Clear Memory Mode <Ref. to EN(H6DO)(diag)-57, OPERATION, Clear Memory Mode.>, and Inspection Mode <Ref. to EN(H6DO)(diag)-44, PROCEDURE, Inspection Mode.>.

	Step	Check	Yes	No
1	**CHECK EXHAUST SYSTEM.**	Are there holes or loose bolts on exhaust system?	Repair the exhaust system.	Go to step **2**.
2	**CHECK AIR INTAKE SYSTEM.**	Are there holes, loose bolts or disconnection of hose on air intake system?	Repair the air intake system.	Go to step **3**.
3	**CHECK FUEL PRESSURE.** **WARNING:** **Place "NO OPEN FLAMES" signs near the working area.** **CAUTION:** **Be careful not to spill fuel.** Measure the fuel pressure. <Ref. to ME(H6DO)-31, INSPECTION, Fuel Pressure.> **CAUTION:** **Release fuel pressure before removing the fuel pressure gauge.**	Is the measured value 340 — 400 kPa (3.5 — 4.1 kgf/cm^2, 49 — 58 psi)?	Go to step **4**.	Repair the following item. Fuel pressure is too high: • Clogged fuel line or bent hose Fuel pressure is too low: • Improper fuel pump discharge • Clogged fuel line
4	**CHECK ENGINE COOLANT TEMPERATURE SENSOR.** 1) Start the engine and warm up completely. 2) Read the value of «Coolant Temp.» using the Subaru Select Monitor or a general scan tool. NOTE: • Subaru Select Monitor For detailed operation procedures, refer to "READ CURRENT DATA FOR ENGINE". <Ref. to EN(H6DO)(diag)-35, Subaru Select Monitor.> • General scan tool For detailed operation procedures, refer to the general scan tool operation manual.	Is the value of «Coolant Temp.» 75°C (167°F) or more?	Go to step **5**.	Replace the engine coolant temperature sensor. <Ref. to FU(H6DO)-29, Engine Coolant Temperature Sensor.>

GETthemMANUALS.org

	Step	Check	Yes	No
5	**CHECK MASS AIR FLOW AND INTAKE AIR TEMPERATURE SENSOR SIGNAL.** 1) Start the engine and warm up engine until coolant temperature is higher than 75°C (167°F). 2) Place the select lever in “P” range or “N” range. 3) Turn the A/C switch to OFF. 4) Turn all the accessory switches to OFF. 5) Read the value of «Mass Air Flow» using the Subaru Select Monitor or a general scan tool. NOTE: • Subaru Select Monitor For detailed operation procedures, refer to “READ CURRENT DATA FOR ENGINE”. <Ref. to EN(H6DO)(diag)-35, Subaru Select Monitor.> • General scan tool For detailed operation procedures, refer to the general scan tool operation manual.	Is the value of «Mass Air Flow» 2.0 — 5.0 g/s (0.26 — 0.66 lb/m)?	Go to step **6**.	Replace the mass air flow and intake air temperature sensor. <Ref. to FU(H6DO)-41, Mass Air Flow and Intake Air Temperature Sensor.>
6	**CHECK MASS AIR FLOW AND INTAKE AIR TEMPERATURE SENSOR.** 1) Start the engine and warm up engine until coolant temperature is higher than 75°C (167°F). 2) Place the select lever in “P” range or “N” range. 3) Turn the A/C switch to OFF. 4) Turn all the accessory switches to OFF. 5) Open the front hood. 6) Measure the ambient temperature. 7) Read the value of «Intake Air Temp.» using the Subaru Select Monitor or a general scan tool. NOTE: • Subaru Select Monitor For detailed operation procedures, refer to “READ CURRENT DATA FOR ENGINE”. <Ref. to EN(H6DO)(diag)-35, Subaru Select Monitor.> • General scan tool For detailed operation procedures, refer to the general scan tool operation manual.	Subtract ambient temperature from «Intake Air Temp.». Is the obtained value –10 — 50°C (–18 — 90°F)?	Repair the poor contact of ECM connector.	Check the mass air flow and intake air temperature sensor. <Ref. to FU(H6DO)-41, Mass Air Flow and Intake Air Temperature Sensor.>

GETTHEMANUALS.org

BQ:DTC P0181 FUEL TEMPERATURE SENSOR “A” CIRCUIT RANGE/PERFORMANCE

DTC DETECTING CONDITION:

- Detected when two consecutive driving cycles with fault occur.
- GENERAL DESCRIPTION <Ref. to GD(H6DO)-104, DTC P0181 FUEL TEMPERATURE SENSOR “A” CIRCUIT RANGE/PERFORMANCE, Diagnostic Trouble Code (DTC) Detecting Criteria.>

CAUTION:

After servicing or replacing faulty parts, perform Clear Memory Mode <Ref. to EN(H6DO)(diag)-57, OPERATION, Clear Memory Mode.>, and Inspection Mode <Ref. to EN(H6DO)(diag)-44, PROCEDURE, Inspection Mode.>.

Step	Check	Yes	No
1 CHECK FOR ANY OTHER DTC ON DISPLAY.	Is any other DTC displayed?	Check the appropriate DTC using the “List of Diagnostic Trouble Code (DTC)”. <Ref. to EN(H6DO)(diag)-85, List of Diagnostic Trouble Code (DTC).>	Replace the fuel temperature sensor. <Ref. to EC(H6DO)-13, Fuel Temperature Sensor.>

GETTHEMANUALS.org

BR:DTC P0182 FUEL TEMPERATURE SENSOR “A” CIRCUIT LOW INPUT

DTC DETECTING CONDITION:

- Immediately at fault recognition
- GENERAL DESCRIPTION <Ref. to GD(H6DO)-107, DTC P0182 FUEL TEMPERATURE SENSOR “A” CIRCUIT LOW INPUT, Diagnostic Trouble Code (DTC) Detecting Criteria.>

CAUTION:

After servicing or replacing faulty parts, perform Clear Memory Mode <Ref. to EN(H6DO)(diag)-57, OPERATION, Clear Memory Mode.>, and Inspection Mode <Ref. to EN(H6DO)(diag)-44, PROCEDURE, Inspection Mode.>.

WIRING DIAGRAM:

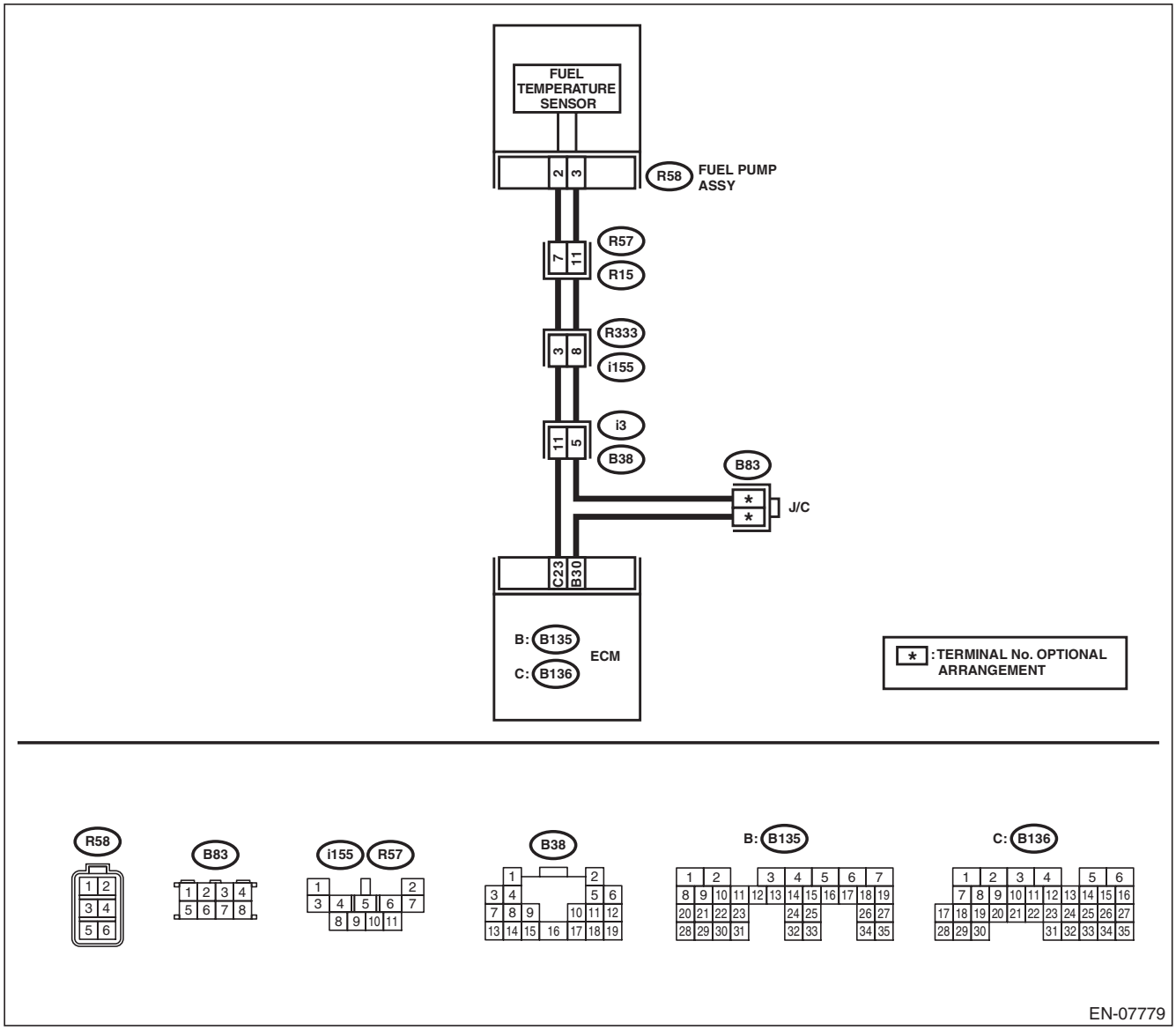

GETthemMANUALS.org

	Step	Check	Yes	No
1	**CHECK CURRENT DATA.** 1) Start the engine. 2) Using the Subaru Select Monitor, read the value in «Fuel Temp.». NOTE: For detailed operation procedures, refer to “READ CURRENT DATA FOR ENGINE”. <Ref. to EN(H6DO)(diag)-35, Subaru Select Monitor.>	Is the value in «Fuel Temp.» 120°C (248°F) or more?	Go to step **2**.	Even if DTC is detected, the circuit has returned to a normal condition at this time. Reproduce the failure, and then perform the diagnosis again. NOTE: In this case, temporary poor contact of connector, temporary open or short circuit of harness may be the cause.
2	**CHECK HARNESS BETWEEN ECM AND FUEL TEMPERATURE SENSOR CONNECTOR.** 1) Turn the ignition switch to OFF. 2) Disconnect the connectors from ECM and fuel temperature sensor. 3) Measure the resistance between ECM and chassis ground. ***Connector & terminal*** ***(B136) No. 23 — Chassis ground:***	Is the resistance 1 MΩ or more?	Replace the fuel temperature sensor. <Ref. to EC(H6DO)-13, Fuel Temperature Sensor.>	Repair the ground short circuit of harness between ECM and fuel pump.

GETtheMANUALS.org

BS:DTC P0183 FUEL TEMPERATURE SENSOR “A” CIRCUIT HIGH INPUT

DTC DETECTING CONDITION:

- Immediately at fault recognition
- GENERAL DESCRIPTION <Ref. to GD(H6DO)-109, DTC P0183 FUEL TEMPERATURE SENSOR “A” CIRCUIT HIGH INPUT, Diagnostic Trouble Code (DTC) Detecting Criteria.>

CAUTION:

After servicing or replacing faulty parts, perform Clear Memory Mode <Ref. to EN(H6DO)(diag)-57, OPERATION, Clear Memory Mode.>, and Inspection Mode <Ref. to EN(H6DO)(diag)-44, PROCEDURE, Inspection Mode.>.

WIRING DIAGRAM:

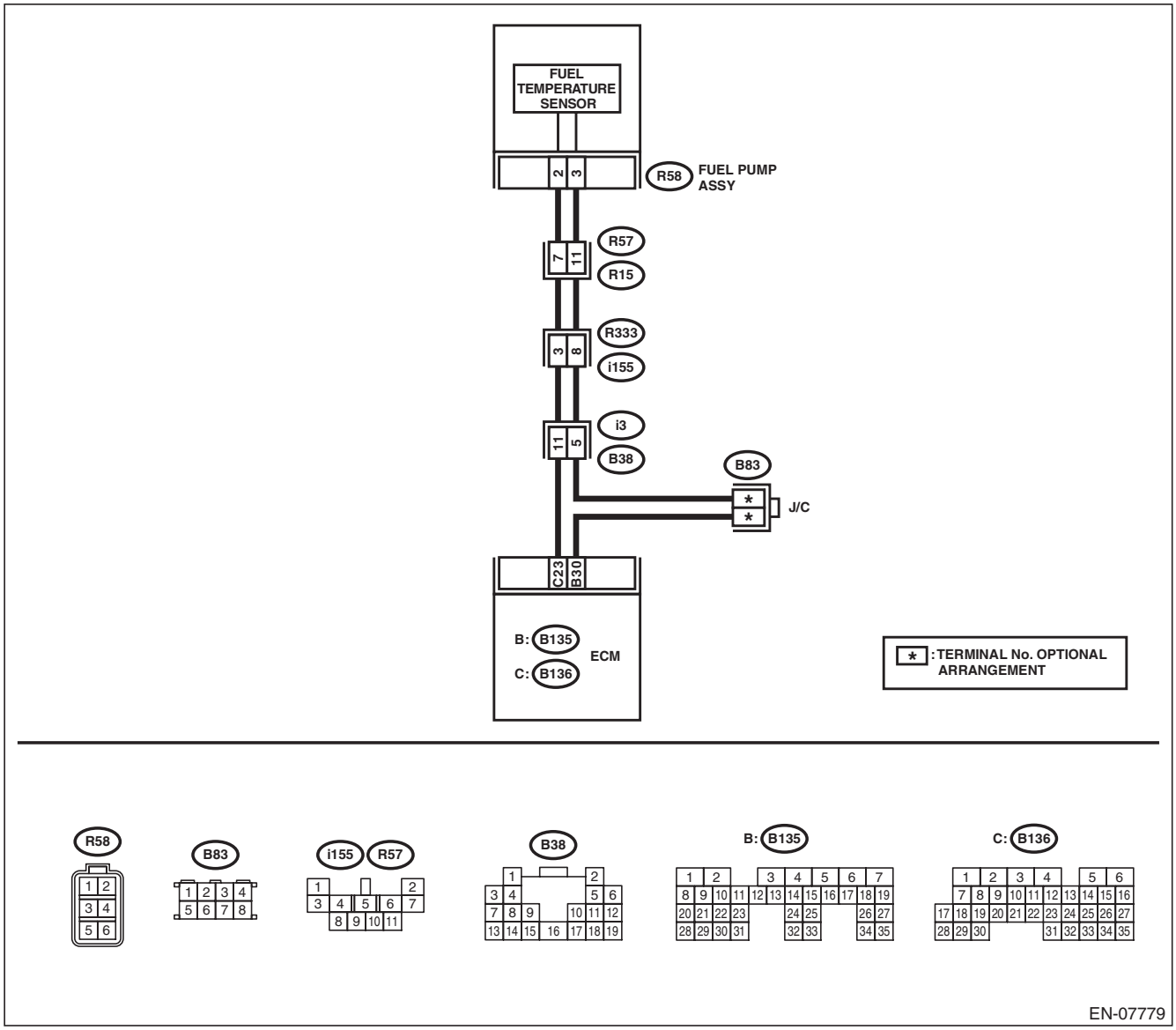

GETTHEMANUALS.org

	Step	Check	Yes	No
1	**CHECK CURRENT DATA.** 1) Start the engine. 2) Using the Subaru Select Monitor, read the value in «Fuel Temp.». NOTE: For detailed operation procedures, refer to "READ CURRENT DATA FOR ENGINE". <Ref. to EN(H6DO)(diag)-35, Subaru Select Monitor.>	Is the value in «Fuel Temp.» less than –40°C (–40°F)?	Go to step **2**.	Even if DTC is detected, the circuit has returned to a normal condition at this time. Reproduce the failure, and then perform the diagnosis again. NOTE: In this case, temporary poor contact of connector, temporary open or short circuit of harness may be the cause.
2	**CHECK FOR POOR CONTACT.** Check any poor contact of the ECM and fuel temperature sensor connectors.	Is there poor contact of the ECM or fuel temperature sensor connectors?	Repair any poor contact of the ECM or fuel temperature sensor connectors.	Go to step **3**.
3	**CHECK HARNESS BETWEEN ECM AND FUEL TEMPERATURE SENSOR CONNECTOR.** 1) Turn the ignition switch to OFF. 2) Disconnect the connectors from ECM and fuel temperature sensor. 3) Measure the resistance of the harness between the ECM and fuel temperature sensor connector. ***Connector & terminal*** ***(B136) No. 23 — (R58) No. 2:*** ***(B135) No. 30 — (R58) No. 3:***	Is the resistance less than 1 Ω?	Go to step **4**.	Repair the harness and connector. NOTE: In this case, repair the following item: • Open circuit in harness between ECM and fuel temperature sensor connector • Poor contact of coupling connector
4	**CHECK HARNESS BETWEEN ECM AND FUEL TEMPERATURE SENSOR CONNECTOR.** 1) Connect all connectors. 2) Turn the ignition switch to ON. 3) Measure the voltage between ECM and chassis ground. ***Connector & terminal*** ***(B136) No. 23 (+) — Chassis ground (–):***	Is the voltage 5 V or more?	Repair the short circuit to power in the harness between the ECM and fuel temperature sensor connector.	Replace the fuel temperature sensor. <Ref. to EC(H6DO)-13, Fuel Temperature Sensor.>

GETthemMANUALS.org

BT:DTC P0196 ENGINE OIL TEMPERATURE SENSOR CIRCUIT RANGE/PERFORMANCE

DTC DETECTING CONDITION:

- Detected when two consecutive driving cycles with fault occur.
- GENERAL DESCRIPTION <Ref. to GD(H6DO)-111, DTC P0196 ENGINE OIL TEMPERATURE SENSOR CIRCUIT RANGE/PERFORMANCE, Diagnostic Trouble Code (DTC) Detecting Criteria.>

TROUBLE SYMPTOM:

- Hard to start
- Improper idling
- Poor driving performance

CAUTION:

After servicing or replacing faulty parts, perform Clear Memory Mode <Ref. to EN(H6DO)(diag)-57, OPERATION, Clear Memory Mode.>, and Inspection Mode <Ref. to EN(H6DO)(diag)-44, PROCEDURE, Inspection Mode.>.

Step	Check	Yes	No
1 **CHECK FOR ANY OTHER DTC ON DISPLAY.**	Is any other DTC displayed?	Check the appropriate DTC using the “List of Diagnostic Trouble Code (DTC)”. <Ref. to EN(H6DO)(diag)-85, List of Diagnostic Trouble Code (DTC).>	Replace the engine oil temperature sensor. <Ref. to FU(H6DO)-49, Oil Temperature Sensor.>

GETTHEMANUALS.org

BU:DTC P0197 ENGINE OIL TEMPERATURE SENSOR LOW

DTC DETECTING CONDITION:

- Immediately at fault recognition
- GENERAL DESCRIPTION <Ref. to GD(H6DO)-113, DTC P0197 ENGINE OIL TEMPERATURE SENSOR LOW, Diagnostic Trouble Code (DTC) Detecting Criteria.>

TROUBLE SYMPTOM:

- Hard to start
- Improper idling
- Poor driving performance

CAUTION:

After servicing or replacing faulty parts, perform Clear Memory Mode <Ref. to EN(H6DO)(diag)-57, OPERATION, Clear Memory Mode.>, and Inspection Mode <Ref. to EN(H6DO)(diag)-44, PROCEDURE, Inspection Mode.>.

WIRING DIAGRAM:

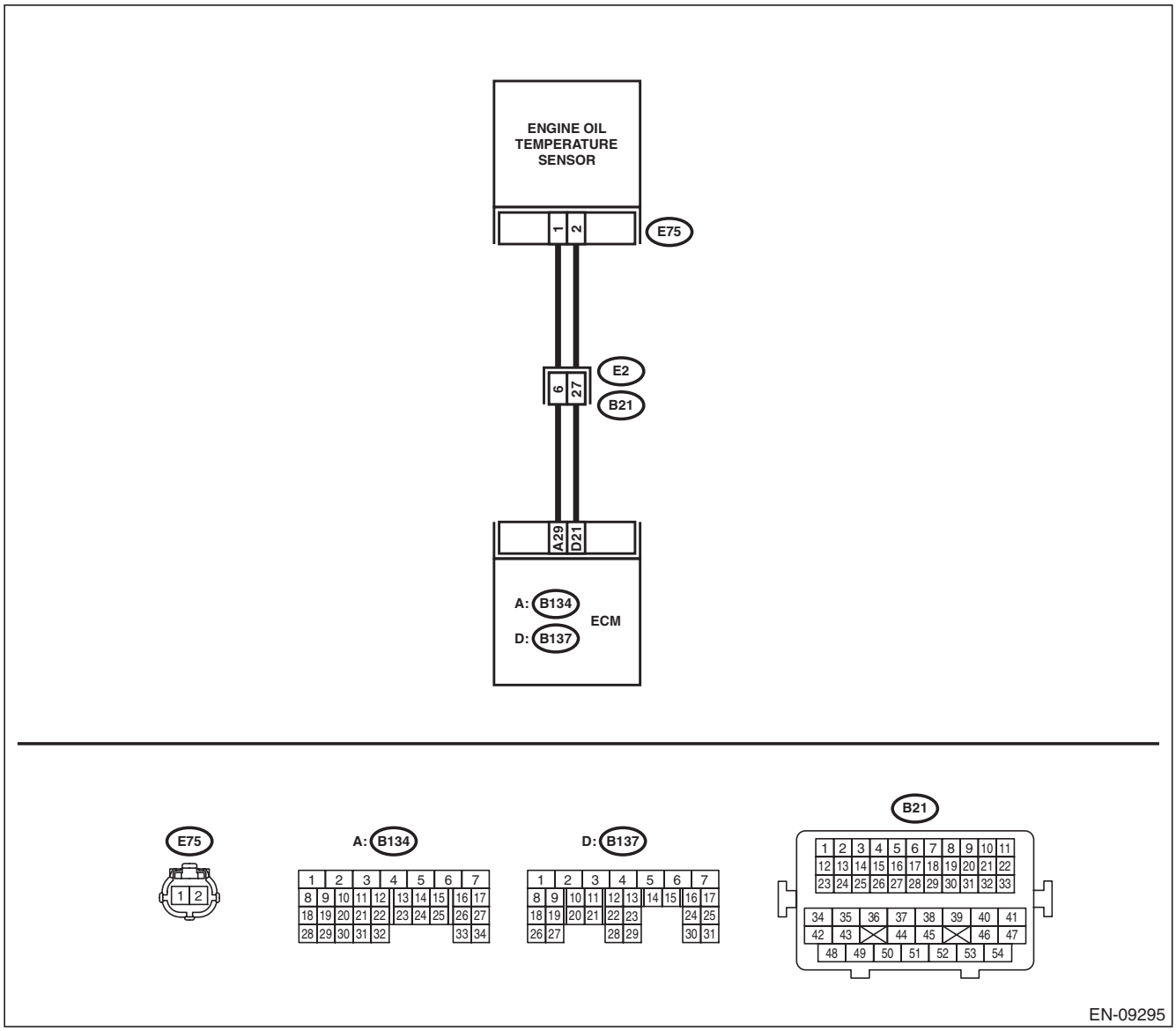

GETTHEMANUALS.org

	Step	Check	Yes	No
1	**CHECK CURRENT DATA.** 1) Start the engine. 2) Read the value of «Oil Temperature» using Subaru Select Monitor. NOTE: For detailed operation procedures, refer to “READ CURRENT DATA FOR ENGINE”. <Ref. to EN(H6DO)(diag)-35, Subaru Select Monitor.>	Is the value of «Oil Temperature» 215°C (419°F) or more?	Go to step **2**.	Even if DTC is detected, the circuit has returned to a normal condition at this time. Reproduce the failure, and then perform the diagnosis again. NOTE: In this case, temporary poor contact of connector, temporary open or short circuit of harness may be the cause.
2	**CHECK HARNESS BETWEEN ECM AND ENGINE OIL TEMPERATURE SENSOR CONNECTOR.** 1) Turn the ignition switch to OFF. 2) Disconnect the connectors from the ECM and engine oil temperature sensor. 3) Measure the resistance between ECM and chassis ground. ***Connector & terminal*** ***(B137) No. 21 — Chassis ground:***	Is the resistance 1 MΩ or more?	Replace the engine oil temperature sensor. <Ref. to FU(H6DO)-49, Oil Temperature Sensor.>	Repair the short circuit to ground in the harness between the ECM and engine oil temperature sensor connector.

GETtheMANUALS.org

BV:DTC P0198 ENGINE OIL TEMPERATURE SENSOR HIGH

DTC DETECTING CONDITION:

- Immediately at fault recognition
- GENERAL DESCRIPTION <Ref. to GD(H6DO)-114, DTC P0198 ENGINE OIL TEMPERATURE SENSOR HIGH, Diagnostic Trouble Code (DTC) Detecting Criteria.>

TROUBLE SYMPTOM:

- Hard to start
- Improper idling
- Poor driving performance

CAUTION:

After servicing or replacing faulty parts, perform Clear Memory Mode <Ref. to EN(H6DO)(diag)-57, OPERATION, Clear Memory Mode.>, and Inspection Mode <Ref. to EN(H6DO)(diag)-44, PROCEDURE, Inspection Mode.>.

WIRING DIAGRAM:

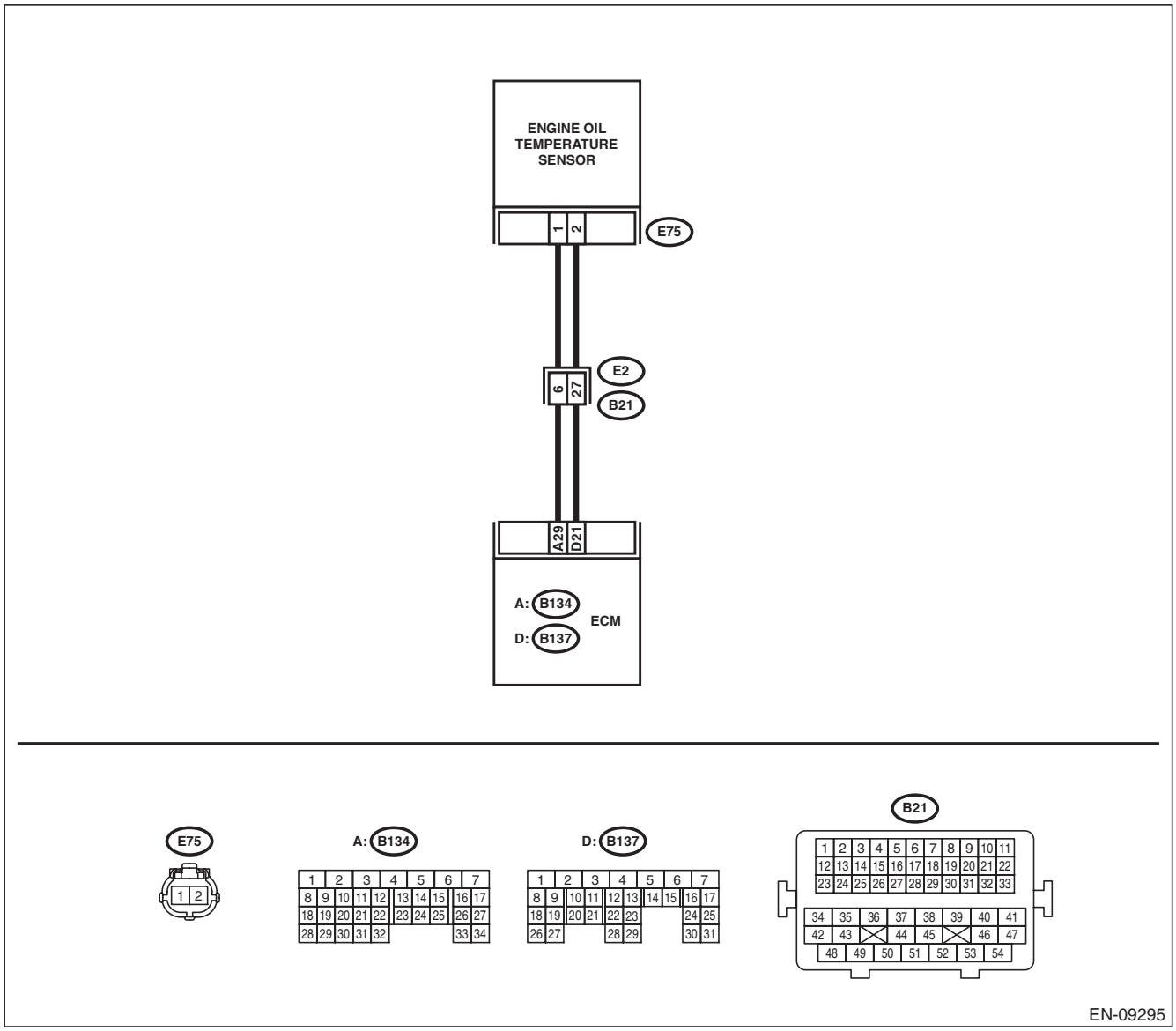

GETTHEMANUALS.org

	Step	Check	Yes	No
1	**CHECK CURRENT DATA.** 1) Start the engine. 2) Read the value of «Oil Temperature» using Subaru Select Monitor. NOTE: For detailed operation procedures, refer to “READ CURRENT DATA FOR ENGINE”. <Ref. to EN(H6DO)(diag)-35, Subaru Select Monitor.>	Is the value of «Oil Temperature» less than –40°C (–40°F)?	Go to step **2**.	Even if DTC is detected, the circuit has returned to a normal condition at this time. Reproduce the failure, and then perform the diagnosis again. NOTE: In this case, temporary poor contact of connector, temporary open or short circuit of harness may be the cause.
2	**CHECK FOR POOR CONTACT.** Check for poor contact between the ECM and engine oil temperature sensor connectors.	Is there poor contact of the ECM or engine oil temperature sensor connectors?	Repair the poor contact of ECM or engine oil temperature sensor connector.	Go to step **3**.
3	**CHECK HARNESS BETWEEN ECM AND ENGINE OIL TEMPERATURE SENSOR CONNECTOR.** 1) Turn the ignition switch to OFF. 2) Disconnect the connectors from the ECM and engine oil temperature sensor. 3) Measure the resistance of the harness between the ECM and engine oil temperature sensor connector. ***Connector & terminal*** ***(B134) No. 29 — (E75) No. 1:*** ***(B137) No. 21 — (E75) No. 2:***	Is the resistance less than 1 Ω?	Go to step **4**.	Repair the harness and connector. NOTE: In this case, repair the following item: • Open circuit in harness between ECM and engine oil temperature sensor connector • Poor contact of coupling connector
4	**CHECK HARNESS BETWEEN ECM AND ENGINE OIL TEMPERATURE SENSOR CONNECTOR.** 1) Connect all connectors. 2) Turn the ignition switch to ON. 3) Measure the voltage between ECM and chassis ground. ***Connector & terminal*** ***(B137) No. 21 (+) — Chassis ground (–):***	Is the voltage 5 V or more?	Repair the short circuit to power in harness between ECM and engine oil temperature sensor connector.	Replace the engine oil temperature sensor. <Ref. to FU(H6DO)-49, Oil Temperature Sensor.>

GETtheMANUALS.org

BW:DTC P0201 INJECTOR #1

DTC DETECTING CONDITION:

- Immediately at fault recognition
- GENERAL DESCRIPTION <Ref. to GD(H6DO)-115, DTC P0201 INJECTOR #1, Diagnostic Trouble Code (DTC) Detecting Criteria.>

TROUBLE SYMPTOM:

- Improper idling
- Poor driving performance

CAUTION:

After servicing or replacing faulty parts, perform Clear Memory Mode <Ref. to EN(H6DO)(diag)-57, OPERATION, Clear Memory Mode.>, and Inspection Mode <Ref. to EN(H6DO)(diag)-44, PROCEDURE, Inspection Mode.>.

WIRING DIAGRAM:

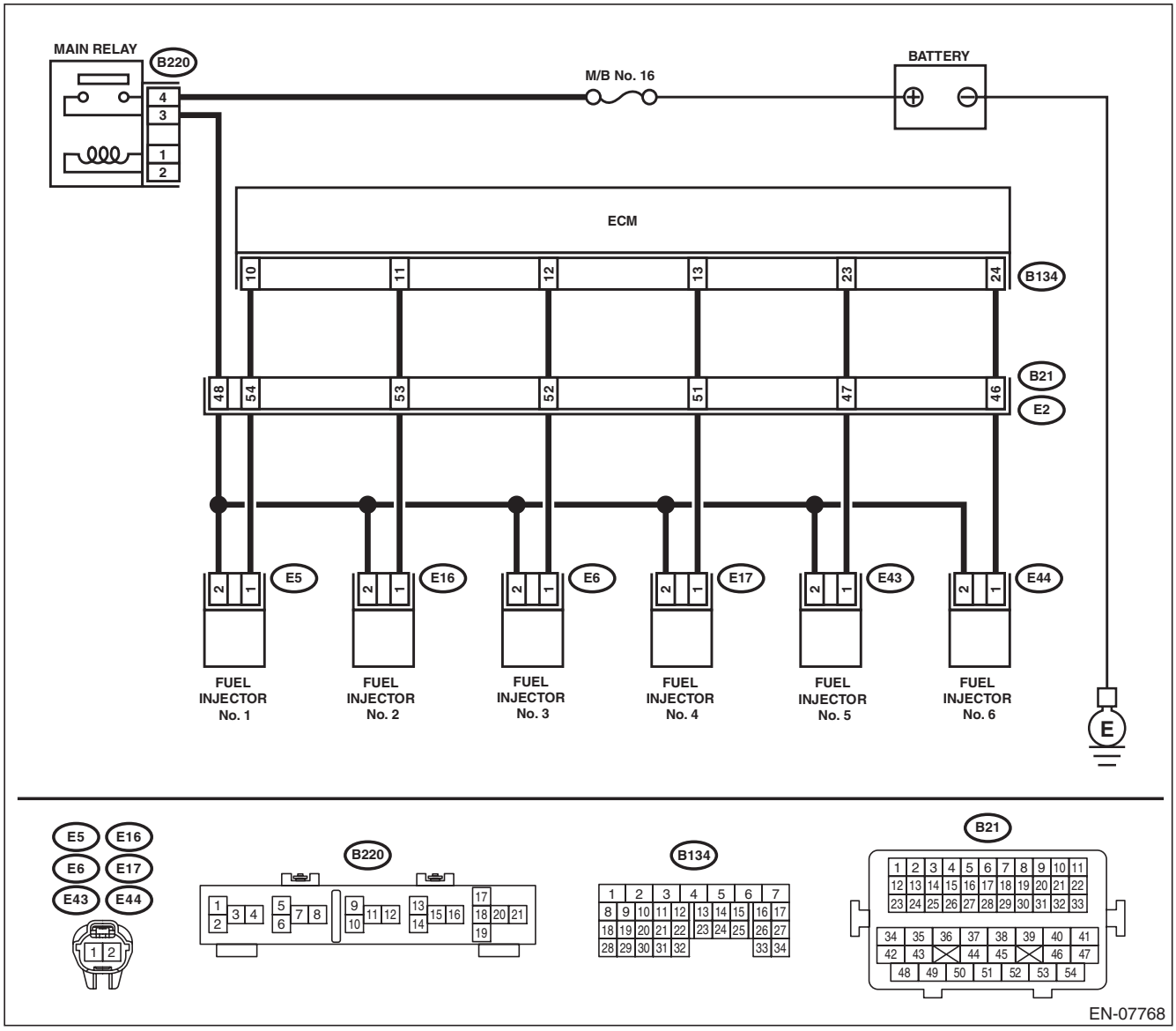

GETtheMANUALS.org

	Step	Check	Yes	No
1	**CHECK POWER SUPPLY TO FUEL INJECTOR.** 1) Turn the ignition switch to OFF. 2) Disconnect the connector from fuel injector. 3) Turn the ignition switch to ON. 4) Measure the voltage between fuel injector connector and the engine ground. ***Connector & terminal*** ***DTC P0201; (E5) No. 2 (+) — Engine ground (–):*** ***DTC P0202; (E16) No. 2 (+) — Engine ground (–):*** ***DTC P0203; (E6) No. 2 (+) — Engine ground (–):*** ***DTC P0204; (E17) No. 2 (+) — Engine ground (–):*** ***DTC P0205; (E43) No. 2 (+) — Engine ground (–):*** ***DTC P0206; (E44) No. 2 (+) — Engine ground (–):***	Is the voltage 10 V or more?	Go to step **2**.	Repair the harness and connector. NOTE: In this case, repair the following item: • Open circuit in harness between main relay and fuel injector connector • Poor contact of main relay connector • Poor contact of coupling connector
2	**CHECK HARNESS BETWEEN ECM AND FUEL INJECTOR CONNECTOR.** 1) Turn the ignition switch to OFF. 2) Disconnect the connector from ECM. 3) Measure the resistance between fuel injector connector and engine ground. ***Connector & terminal*** ***DTC P0201; (E5) No. 1 — Engine ground:*** ***DTC P0202; (E16) No. 1 — Engine ground:*** ***DTC P0203; (E6) No. 1 — Engine ground:*** ***DTC P0204; (E17) No. 1 — Engine ground:*** ***DTC P0205; (E43) No. 1 — Engine ground:*** ***DTC P0206; (E44) No. 1 — Engine ground:***	Is the resistance 1 MΩ or more?	Go to step **3**.	Repair the short circuit to ground in harness between ECM connector and fuel injector connector.
3	**CHECK HARNESS BETWEEN ECM AND FUEL INJECTOR CONNECTOR.** Measure the resistance of harness between ECM connector and fuel injector connector. ***Connector & terminal*** ***DTC P0201; (B134) No. 10 — (E5) No. 1:*** ***DTC P0202; (B134) No. 11 — (E16) No. 1:*** ***DTC P0203; (B134) No. 12 — (E6) No. 1:*** ***DTC P0204; (B134) No. 13 — (E17) No. 1:*** ***DTC P0205; (B134) No. 23 — (E43) No. 1:*** ***DTC P0206; (B134) No. 24 — (E44) No. 1:***	Is the resistance less than 1 Ω?	Go to step **4**.	Repair the harness and connector. NOTE: In this case, repair the following item: • Open circuit in harness between ECM connector and fuel injector connector • Poor contact of coupling connector
4	**CHECK FUEL INJECTOR.** Measure the resistance between fuel injector terminals on the corresponding cylinder. ***Terminals*** ***No. 1 — No. 2:***	Is the resistance 5 — 20 Ω?	Go to step **5**.	Replace the fuel injector. <Ref. to FU(H6DO)-44, Fuel Injector.>
5	**CHECK FOR POOR CONTACT.** Check for poor contact of ECM connector.	Is there poor contact of ECM connector?	Repair the poor contact of ECM connector.	Go to step **6**.

GETTHEMANUALS.org

Step		Check	Yes	No
6	**CHECK FUEL INJECTOR OPERATION.** 1) Connect all connectors. 2) Start the engine. 3) Check if the corresponding fuel injector emits operating sound. NOTE: Use a sound scope to check the operating sound.	Does the fuel injector emit operating sound?	Even if DTC is detected, the circuit has returned to a normal condition at this time. Reproduce the failure, and then perform the diagnosis again. NOTE: In this case, temporary poor contact of connector, temporary open or short circuit of harness may be the cause.	Repair the poor contact of fuel injector connector.

BX:DTC P0202 INJECTOR #2

NOTE:
For the diagnostic procedure, refer to DTC P0201. <Ref. to EN(H6DO)(diag)-194, DTC P0201 INJECTOR #1, Diagnostic Procedure with Diagnostic Trouble Code (DTC).>

BY:DTC P0203 INJECTOR #3

NOTE:
For the diagnostic procedure, refer to DTC P0201. <Ref. to EN(H6DO)(diag)-194, DTC P0201 INJECTOR #1, Diagnostic Procedure with Diagnostic Trouble Code (DTC).>

BZ:DTC P0204 INJECTOR #4

NOTE:
For the diagnostic procedure, refer to DTC P0201. <Ref. to EN(H6DO)(diag)-194, DTC P0201 INJECTOR #1, Diagnostic Procedure with Diagnostic Trouble Code (DTC).>

CA:DTC P0205 INJECTOR #5

NOTE:
For the diagnostic procedure, refer to DTC P0201. <Ref. to EN(H6DO)(diag)-194, DTC P0201 INJECTOR #1, Diagnostic Procedure with Diagnostic Trouble Code (DTC).>

CB:DTC P0206 INJECTOR #6

NOTE:
For the diagnostic procedure, refer to DTC P0201. <Ref. to EN(H6DO)(diag)-194, DTC P0201 INJECTOR #1, Diagnostic Procedure with Diagnostic Trouble Code (DTC).>

GETTHEMANUALS.org

CC:DTC P0222 THROTTLE/PEDAL POSITION SENSOR/SWITCH “B” CIRCUIT LOW

DTC DETECTING CONDITION:

- Immediately at fault recognition
- GENERAL DESCRIPTION <Ref. to GD(H6DO)-117, DTC P0222 THROTTLE/PEDAL POSITION SENSOR/SWITCH “B” CIRCUIT LOW, Diagnostic Trouble Code (DTC) Detecting Criteria.>

TROUBLE SYMPTOM:

- Improper idling
- Poor driving performance
- Engine stalls.

CAUTION:

After servicing or replacing faulty parts, perform Clear Memory Mode <Ref. to EN(H6DO)(diag)-57, OPERATION, Clear Memory Mode.>, and Inspection Mode <Ref. to EN(H6DO)(diag)-44, PROCEDURE, Inspection Mode.>.

WIRING DIAGRAM:

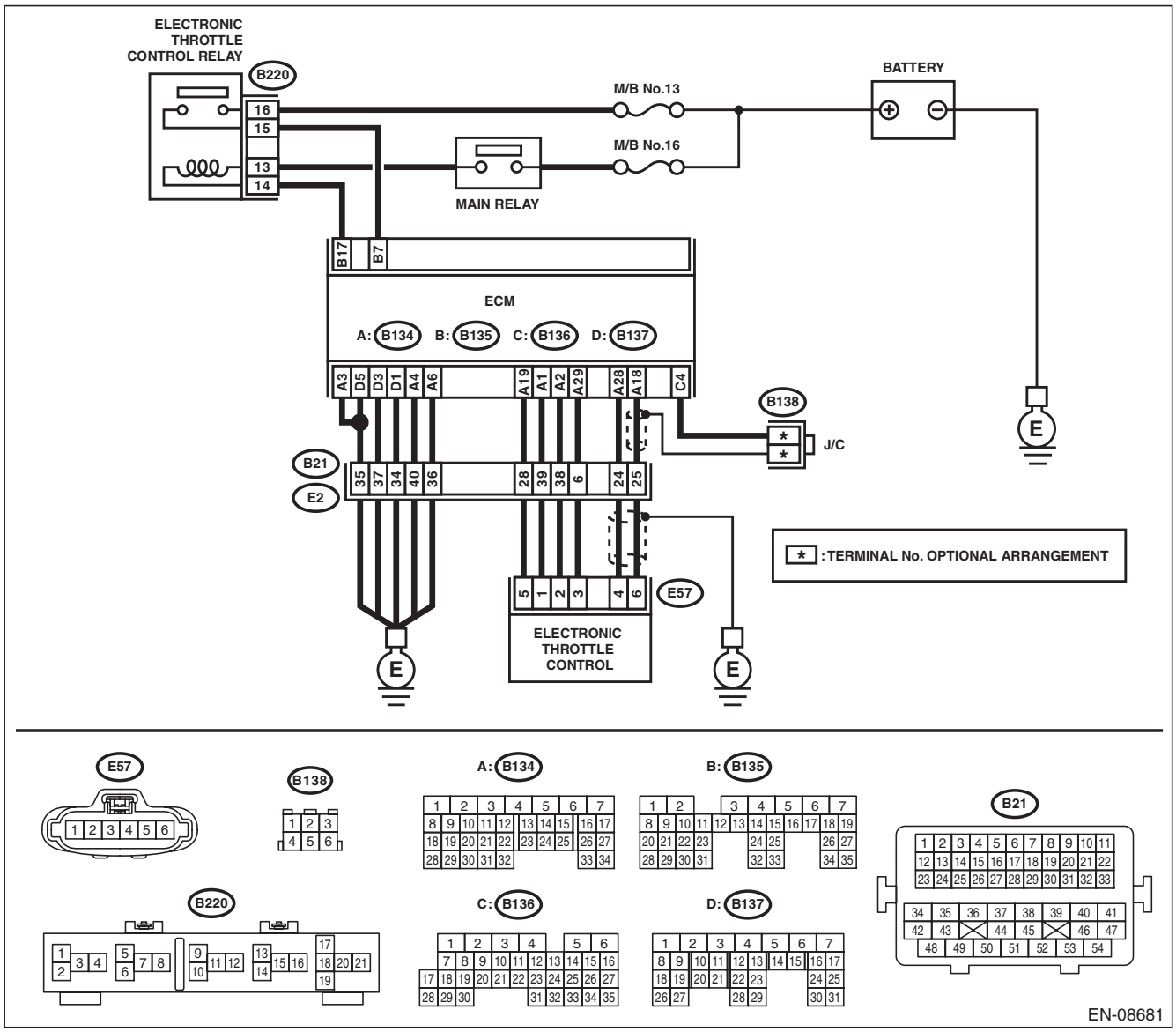

GETtheMANUALS.org

Step		Check	Yes	No
1	**CHECK HARNESS BETWEEN ECM AND ELECTRONIC THROTTLE CONTROL.** 1) Turn the ignition switch to OFF. 2) Disconnect the connectors from ECM and electronic throttle control. 3) Measure the resistance between ECM and chassis ground. ***Connector & terminal*** ***(B134) No. 19 — Chassis ground:*** ***(B134) No. 28 — Chassis ground:***	Is the resistance 1 MΩ or more?	Go to step **2**.	Repair the short circuit to ground in harness between ECM and electronic throttle control connector.
2	**CHECK SHORT CIRCUIT INSIDE THE ECM.** 1) Connect the connector to ECM. 2) Measure the resistance between electronic throttle control connector and engine ground. ***Connector & terminal*** ***(E57) No. 4 — Engine ground:***	Is the resistance 1 MΩ or more?	Replace the electronic throttle control. <Ref. to FU(H6DO)-19, Throttle Body.>	Repair the short circuit to ground in harness between ECM and electronic throttle control connector. Replace the ECM if defective. <Ref. to FU(H6DO)-54, Engine Control Module (ECM).>

GETTHEMANUALS.org

CD:DTC P0223 THROTTLE/PEDAL POSITION SENSOR/SWITCH “B” CIRCUIT HIGH

DTC DETECTING CONDITION:

- Immediately at fault recognition
- GENERAL DESCRIPTION <Ref. to GD(H6DO)-119, DTC P0223 THROTTLE/PEDAL POSITION SENSOR/SWITCH “B” CIRCUIT HIGH, Diagnostic Trouble Code (DTC) Detecting Criteria.>

TROUBLE SYMPTOM:

- Improper idling
- Poor driving performance
- Engine stalls.

CAUTION:

After servicing or replacing faulty parts, perform Clear Memory Mode <Ref. to EN(H6DO)(diag)-57, OPERATION, Clear Memory Mode.>, and Inspection Mode <Ref. to EN(H6DO)(diag)-44, PROCEDURE, Inspection Mode.>.

WIRING DIAGRAM:

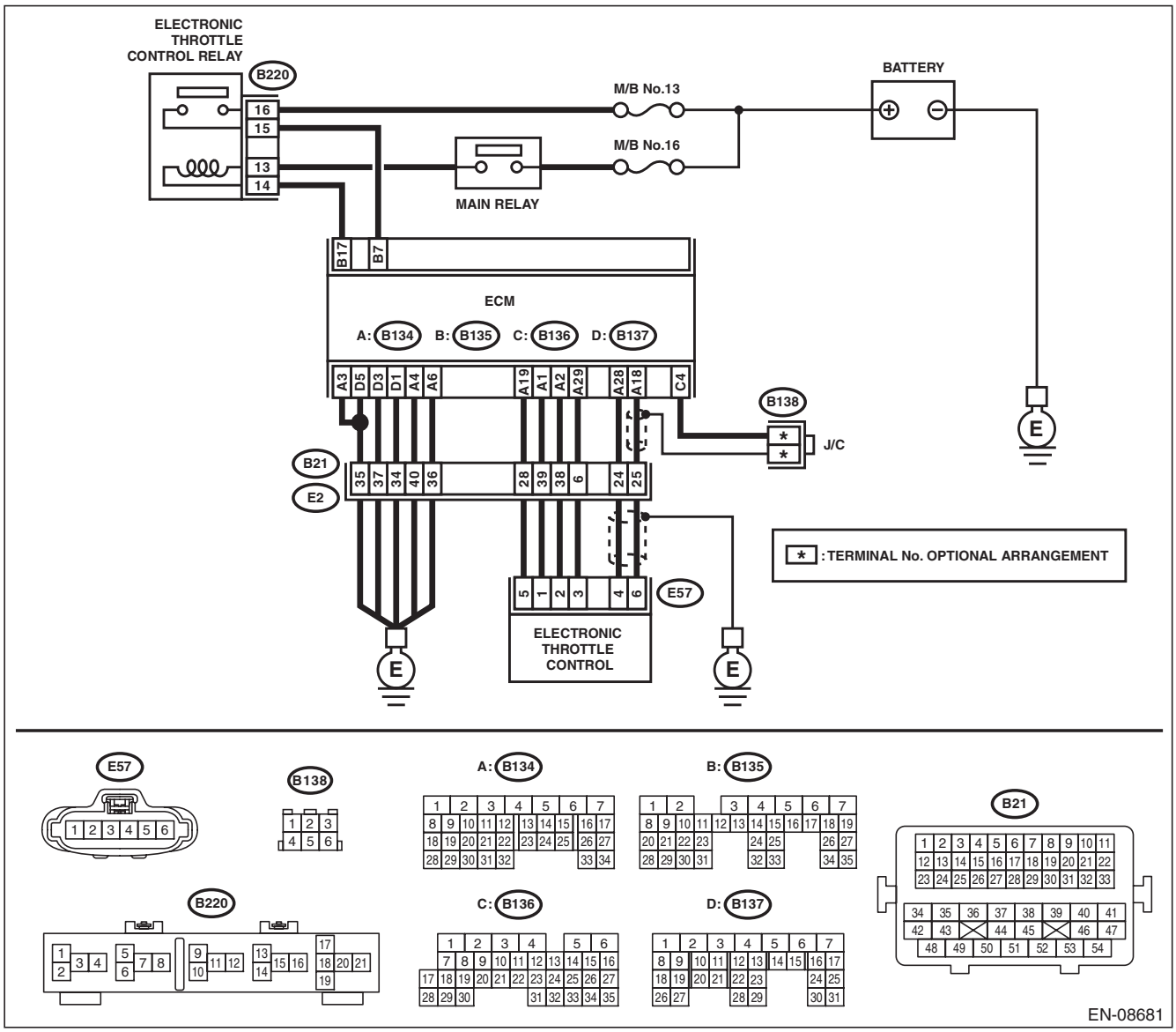

GETTHEMANUALS.org

	Step	Check	Yes	No
1	**CHECK HARNESS BETWEEN ECM AND ELECTRONIC THROTTLE CONTROL.** 1) Turn the ignition switch to OFF. 2) Disconnect the connectors from ECM and electronic throttle control. 3) Measure the resistance of harness between ECM and electronic throttle control connector. ***Connector & terminal*** ***(B134) No. 28 — (E57) No. 4:*** ***(B134) No. 29 — (E57) No. 3:***	Is the resistance less than 1 Ω?	Go to step **2**.	Repair the harness and connector. NOTE: In this case, repair the following item: • Open circuit in harness between ECM and electronic throttle control connector • Poor contact of coupling connector
2	**CHECK HARNESS BETWEEN ECM AND ELECTRONIC THROTTLE CONTROL.** 1) Connect the connector to ECM. 2) Measure the resistance between electronic throttle control connector and engine ground. ***Connector & terminal*** ***(E57) No. 3 — Engine ground:***	Is the resistance less than 5 Ω?	Go to step **3**.	Repair the harness and connector. NOTE: In this case, repair the following item: • Open circuit of harness between ECM and engine ground • Poor contact of ECM connector • Poor contact of coupling connector
3	**CHECK HARNESS BETWEEN ECM AND ELECTRONIC THROTTLE CONTROL.** 1) Turn the ignition switch to ON. 2) Measure the voltage between electronic throttle control connector and engine ground. ***Connector & terminal*** ***(E57) No. 4 (+) — Engine ground (–):***	Is the voltage 5 V or more?	Repair the short circuit to power in harness between ECM and electronic throttle control connector.	Go to step **4**.
4	**CHECK HARNESS BETWEEN ECM AND ELECTRONIC THROTTLE CONTROL.** 1) Turn the ignition switch to OFF. 2) Disconnect the connectors from ECM. 3) Measure the resistance between ECM connectors. ***Connector & terminal*** ***(B134) No. 19 — (B134) No. 28:***	Is the resistance 1 MΩ or more?	Repair the poor contact of electronic throttle control connector. Replace the electronic throttle control if defective. <Ref. to FU(H6DO)-19, Throttle Body.>	Repair the short circuit to power in harness between ECM and electronic throttle control connector.

GETtheMANUALS.org

CE:DTC P0230 FUEL PUMP PRIMARY CIRCUIT

DTC DETECTING CONDITION:

- Detected when two consecutive driving cycles with fault occur.
- GENERAL DESCRIPTION <Ref. to GD(H6DO)-121, DTC P0230 FUEL PUMP PRIMARY CIRCUIT, Diagnostic Trouble Code (DTC) Detecting Criteria.>

CAUTION:

After servicing or replacing faulty parts, perform Clear Memory Mode <Ref. to EN(H6DO)(diag)-57, OPERATION, Clear Memory Mode.>, and Inspection Mode <Ref. to EN(H6DO)(diag)-44, PROCEDURE, Inspection Mode.>.

WIRING DIAGRAM:

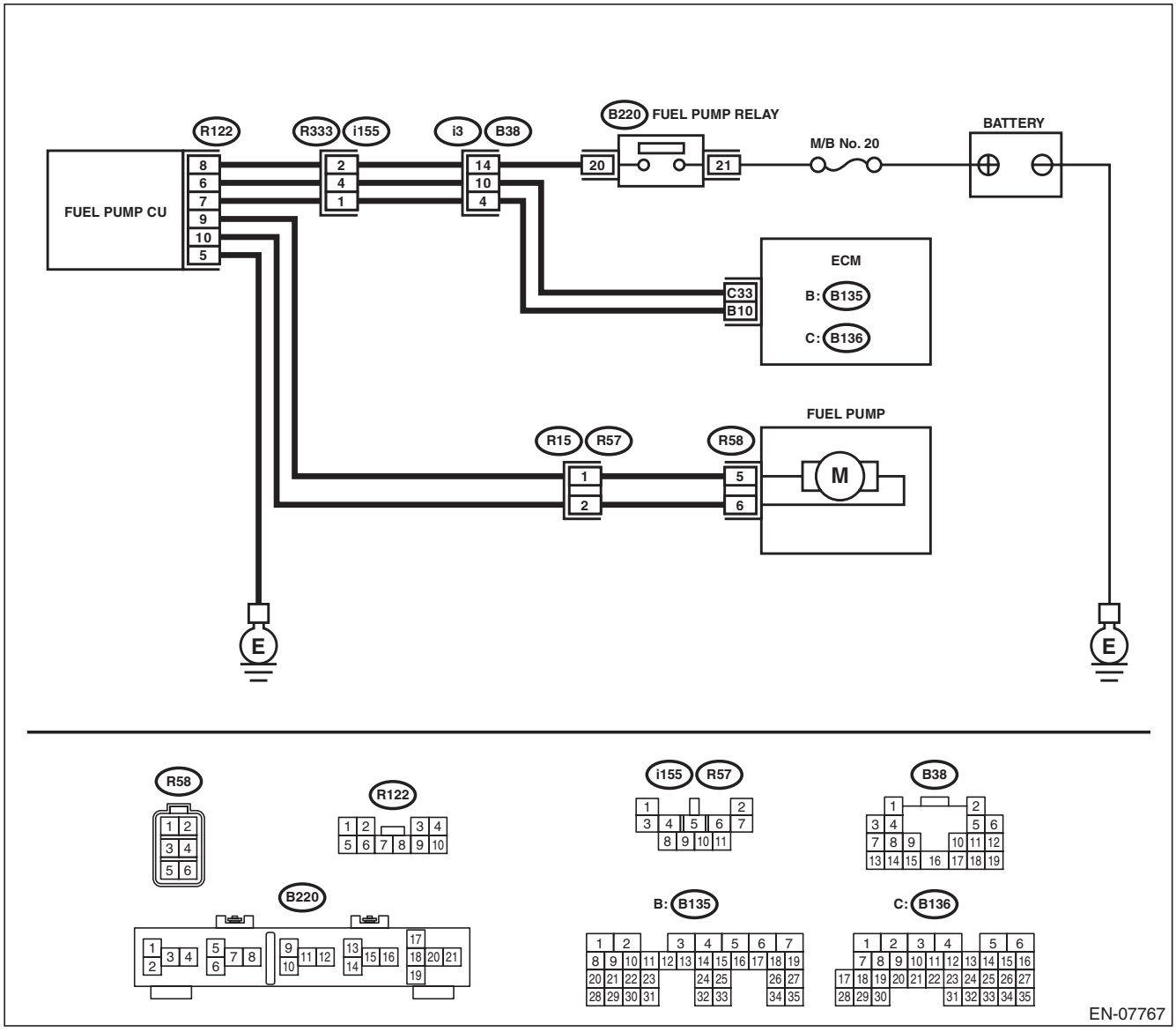

GETTHEMANUALS.org

	Step	Check	Yes	No
1	**CHECK POWER SUPPLY CIRCUIT TO FUEL PUMP CONTROL UNIT.** 1) Turn the ignition switch to OFF. 2) Disconnect the connector from fuel pump control unit. 3) Turn the ignition switch to ON. 4) Measure the voltage between fuel pump control unit and chassis ground. ***Connector & terminal*** ***(R122) No. 8 (+) — Chassis ground (–):***	Is the voltage 10 V or more?	Go to step **2**.	Repair the power supply circuit. NOTE: In this case, repair the following item: • Open circuit or short circuit to ground in harness between fuel pump relay connector and fuel pump control unit connector • Poor contact of fuel pump relay connector • Poor contact of coupling connector
2	**CHECK GROUND CIRCUIT OF FUEL PUMP CONTROL UNIT.** 1) Turn the ignition switch to OFF. 2) Measure the resistance of harness between fuel pump control unit and chassis ground. ***Connector & terminal*** ***(R122) No. 5 — Chassis ground:***	Is the resistance less than 5 Ω?	Go to step **3**.	Repair the open circuit in harness between fuel pump control unit connector and chassis ground.
3	**CHECK HARNESS BETWEEN FUEL PUMP CONTROL UNIT AND FUEL PUMP CONNECTOR.** 1) Disconnect the connector from fuel pump. 2) Measure the resistance of harness between fuel pump control unit and fuel pump connector. ***Connector & terminal*** ***(R122) No. 9 — (R58) No. 5:*** ***(R122) No. 10 — (R58) No. 6:***	Is the resistance less than 1 Ω?	Go to step **4**.	Repair the harness and connector. NOTE: In this case, repair the following item: • Open circuit in harness between fuel pump control unit connector and fuel pump connector • Poor contact of coupling connector
4	**CHECK HARNESS BETWEEN FUEL PUMP CONTROL UNIT AND FUEL PUMP CONNECTOR.** Measure the resistance between fuel pump control unit and chassis ground. ***Connector & terminal*** ***(R122) No. 9 — Chassis ground:*** ***(R122) No. 10 — Chassis ground:***	Is the resistance 1 MΩ or more?	Go to step **5**.	Repair the short circuit to ground in harness between fuel pump control unit connector and fuel pump connector.
5	**CHECK HARNESS BETWEEN ECM AND FUEL PUMP CONTROL UNIT.** 1) Disconnect the connector from ECM. 2) Measure the resistance of the harness between the ECM and fuel pump control unit. ***Connector & terminal*** ***(B136) No. 33 — (R122) No. 6:*** ***(B135) No. 10 — (R122) No. 7:***	Is the resistance less than 1 Ω?	Go to step **6**.	Repair the harness and connector. NOTE: In this case, repair the following item: • Open circuit in harness between ECM and fuel pump control unit connector • Poor contact of coupling connector

GETtheMANUALS.org

Step		Check	Yes	No
6	**CHECK HARNESS BETWEEN ECM AND FUEL PUMP CONTROL UNIT.** Measure the resistance between fuel pump control unit and chassis ground. ***Connector & terminal*** ***(R122) No. 6 — Chassis ground:*** ***(R122) No. 7 — Chassis ground:***	Is the resistance 1 MΩ or more?	Go to step **7**.	Repair the short circuit to ground in harness between ECM and fuel pump control unit connector.
7	**CHECK FOR POOR CONTACT.** Check for poor contact of ECM and fuel pump control unit connector.	Is there poor contact of ECM or fuel pump control unit connector?	Repair the poor contact of ECM or fuel pump control unit connector.	Go to step **8**.
8	**CHECK EXPERIENCE OF RUNNING OUT OF FUEL.**	Has the vehicle experienced running out of fuel?	Finish the diagnosis. NOTE: DTC may be recorded as a result of fuel pump idling while running out of fuel.	Replace the fuel pump control unit. <Ref. to FU(H6DO)-58, Fuel Pump Control Unit.>

GETTHEMANUALS.org

CF:DTC P0301 CYLINDER 1 MISFIRE DETECTED

NOTE:
For the diagnostic procedure, refer to DTC P0306. <Ref. to EN(H6DO)(diag)-205, DTC P0306 CYLINDER 6 MISFIRE DETECTED, Diagnostic Procedure with Diagnostic Trouble Code (DTC).>

CG:DTC P0302 CYLINDER 2 MISFIRE DETECTED

NOTE:
For the diagnostic procedure, refer to DTC P0306. <Ref. to EN(H6DO)(diag)-205, DTC P0306 CYLINDER 6 MISFIRE DETECTED, Diagnostic Procedure with Diagnostic Trouble Code (DTC).>

CH:DTC P0303 CYLINDER 3 MISFIRE DETECTED

NOTE:
For the diagnostic procedure, refer to DTC P0306. <Ref. to EN(H6DO)(diag)-205, DTC P0306 CYLINDER 6 MISFIRE DETECTED, Diagnostic Procedure with Diagnostic Trouble Code (DTC).>

CI: DTC P0304 CYLINDER 4 MISFIRE DETECTED

NOTE:
For the diagnostic procedure, refer to DTC P0306. <Ref. to EN(H6DO)(diag)-205, DTC P0306 CYLINDER 6 MISFIRE DETECTED, Diagnostic Procedure with Diagnostic Trouble Code (DTC).>

CJ:DTC P0305 CYLINDER 5 MISFIRE DETECTED

NOTE:
For the diagnostic procedure, refer to DTC P0306. <Ref. to EN(H6DO)(diag)-205, DTC P0306 CYLINDER 6 MISFIRE DETECTED, Diagnostic Procedure with Diagnostic Trouble Code (DTC).>

GETthemMANUALS.org

CK:DTC P0306 CYLINDER 6 MISFIRE DETECTED

DTC DETECTING CONDITION:

- Detected when two consecutive driving cycles with fault occur.
- Immediately at fault recognition (A misfire which could damage catalyst occurs.)
- GENERAL DESCRIPTION <Ref. to GD(H6DO)-129, DTC P0306 CYLINDER 6 MISFIRE DETECTED, Diagnostic Trouble Code (DTC) Detecting Criteria.>

TROUBLE SYMPTOM:

- Engine stalls.
- Improper idling
- Rough driving

CAUTION:

After servicing or replacing faulty parts, perform Clear Memory Mode <Ref. to EN(H6DO)(diag)-57, OPERATION, Clear Memory Mode.>, and Inspection Mode <Ref. to EN(H6DO)(diag)-44, PROCEDURE, Inspection Mode.>.

WIRING DIAGRAM:

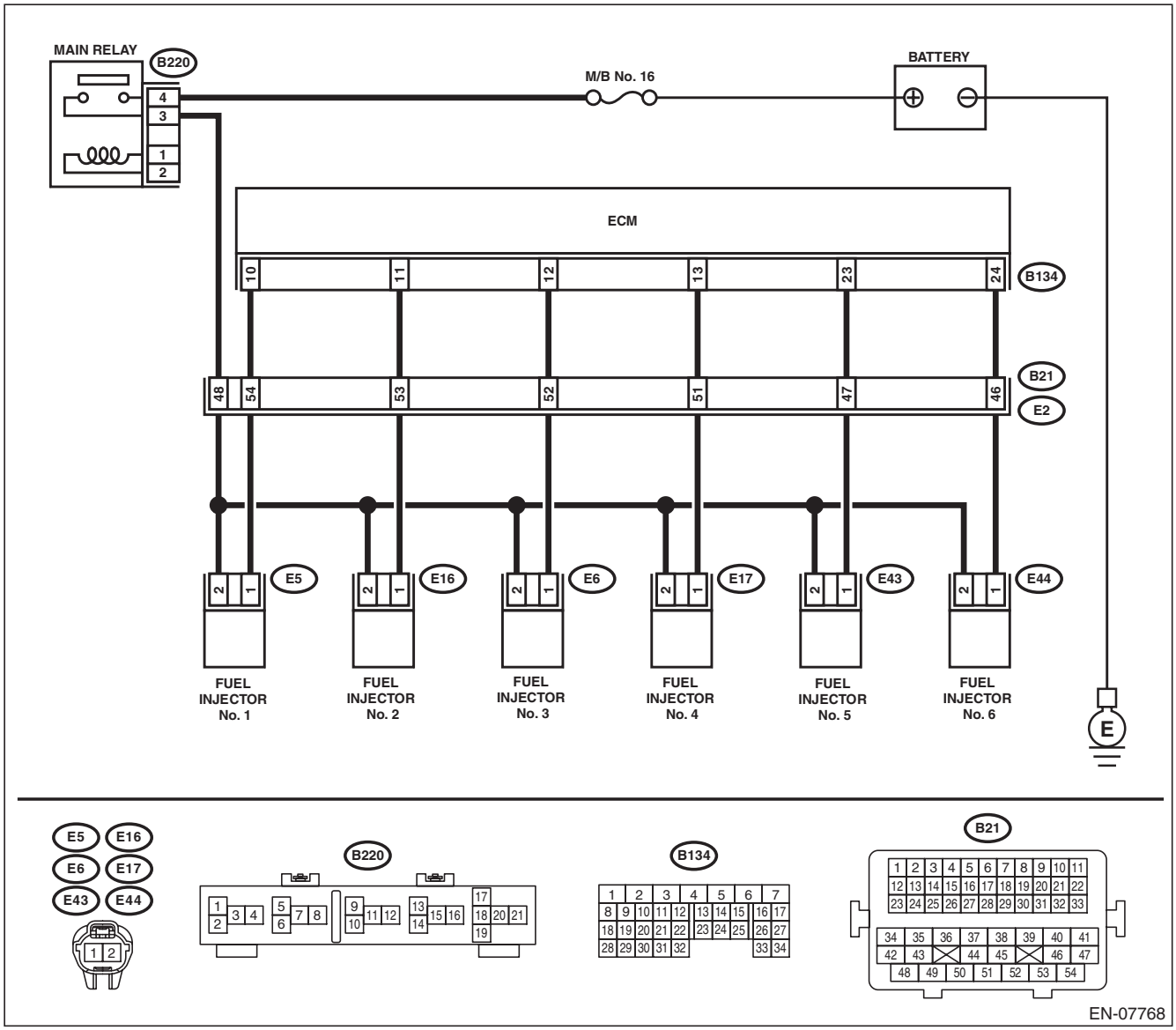

GETTHEMANUALS.org

	Step	Check	Yes	No
1	**CHECK OUTPUT SIGNAL OF ECM.** 1) Turn the ignition switch to ON. 2) Measure the voltage between ECM and chassis ground on faulty cylinders. ***Connector & terminal*** ***#1 (B134) No. 10 (+) — Chassis ground (–):*** ***#2 (B134) No. 11 (+) — Chassis ground (–):*** ***#3 (B134) No. 12 (+) — Chassis ground (–):*** ***#4 (B134) No. 13 (+) — Chassis ground (–):*** ***#5 (B134) No. 23 (+) — Chassis ground (–):*** ***#6 (B134) No. 24 (+) — Chassis ground (–):***	Is the voltage 10 V or more?	Go to step **6**.	Go to step **2**.
2	**CHECK HARNESS BETWEEN ECM AND FUEL INJECTOR.** 1) Turn the ignition switch to OFF. 2) Disconnect the connector from fuel injector on faulty cylinders. 3) Measure the resistance between fuel injector connector and engine ground on faulty cylinders. ***Connector & terminal*** ***#1 (E5) No. 1 — Engine ground:*** ***#2 (E16) No. 1 — Engine ground:*** ***#3 (E6) No. 1 — Engine ground:*** ***#4 (E17) No. 1 — Engine ground:*** ***#5 (E43) No. 1 — Engine ground:*** ***#6 (E44) No. 1 — Engine ground:***	Is the resistance 1 MΩ or more?	Go to step **3**.	Repair the short circuit to ground in harness between ECM and fuel injector connector.
3	**CHECK HARNESS BETWEEN ECM AND FUEL INJECTOR.** Measure the resistance of harness between ECM and fuel injector connector on faulty cylinders. ***Connector & terminal*** ***#1 (B134) No. 10 — (E5) No. 1:*** ***#2 (B134) No. 11 — (E16) No. 1:*** ***#3 (B134) No. 12 — (E6) No. 1:*** ***#4 (B134) No. 13 — (E17) No. 1:*** ***#5 (B134) No. 23 — (E43) No. 1:*** ***#6 (B134) No. 24 — (E44) No. 1:***	Is the resistance less than 1 Ω?	Go to step **4**.	Repair the harness and connector. NOTE: In this case, repair the following item: • Open circuit in harness between ECM and fuel injector connector • Poor contact of coupling connector
4	**CHECK FUEL INJECTOR.** Measure the resistance between fuel injector terminals on faulty cylinder. ***Terminals*** ***No. 1 — No. 2:***	Is the resistance 5 — 20 Ω?	Go to step **5**.	Replace the faulty fuel injector. <Ref. to FU(H6DO)-44, Fuel Injector.>
5	**CHECK POWER SUPPLY LINE.** 1) Turn the ignition switch to ON. 2) Measure the voltage between fuel injector connector of faulty cylinders and engine ground. ***Connector & terminal*** ***#1 (E5) No. 2 (+) — Engine ground (–):*** ***#2 (E16) No. 2 (+) — Engine ground (–):*** ***#3 (E6) No. 2 (+) — Engine ground (–):*** ***#4 (E17) No. 2 (+) — Engine ground (–):*** ***#5 (E43) No. 2 (+) — Engine ground (–):*** ***#6 (E44) No. 2 (+) — Engine ground (–):***	Is the voltage 10 V or more?	Repair the poor contact of all connectors in fuel injector circuit.	Repair the harness and connector. NOTE: In this case, repair the following item: • Open circuit in harness between the main relay and fuel injector connector on faulty cylinders • Poor contact of coupling connector • Poor contact of main relay connector

GETTHEMANUALS.org

	Step	Check	Yes	No
6	**CHECK HARNESS BETWEEN ECM AND FUEL INJECTOR.** 1) Turn the ignition switch to OFF. 2) Disconnect the connector from fuel injector on faulty cylinders. 3) Turn the ignition switch to ON. 4) Measure the voltage between ECM and chassis ground on faulty cylinders. ***Connector & terminal*** ***#1 (B134) No. 10 (+) — Chassis ground (–):*** ***#2 (B134) No. 11 (+) — Chassis ground (–):*** ***#3 (B134) No. 12 (+) — Chassis ground (–):*** ***#4 (B134) No. 13 (+) — Chassis ground (–):*** ***#5 (B134) No. 23 (+) — Chassis ground (–):*** ***#6 (B134) No. 24 (+) — Chassis ground (–):***	Is the voltage 10 V or more?	Repair the short circuit to power in harness between ECM and fuel injector connector.	Go to step **7**.
7	**CHECK FUEL INJECTOR.** 1) Turn the ignition switch to OFF. 2) Measure the resistance between fuel injector terminals on faulty cylinder. ***Terminals*** ***No. 1 — No. 2:***	Is the resistance 5 — 20 Ω?	Go to step **8**.	Replace the faulty fuel injector. <Ref. to FU(H6DO)-44, Fuel Injector.>
8	**CHECK INSTALLATION OF CAMSHAFT POSITION SENSOR/CRANKSHAFT POSITION SENSOR.**	Is the camshaft position sensor or crankshaft position sensor loosely installed?	Tighten the camshaft position sensor or crankshaft position sensor.	Go to step **9**.
9	**CHECK CRANK PLATE.**	Is the crank sprocket rusted or the teeth of crank plate broken?	Replace the crank plate. <Ref. to ME(H6DO)-104, Cylinder Block.>	Go to step **10**.
10	**CHECK INSTALLATION CONDITION OF TIMING CHAIN.** Turn the crankshaft using ST, and align the alignment mark on crank sprocket with alignment mark on cylinder block. ST 18252AA000 CRANKSHAFT SOCKET	Is the timing chain dislocated from its proper position?	Correct the installation condition of timing chain. <Ref. to ME(H6DO)-62, Timing Chain Assembly.>	Go to step **11**.
11	**CHECK FUEL LEVEL.**	Is the fuel meter indication lower than the “Lower” level?	Refill the fuel so that the fuel meter indication is higher than the “Lower” level, and proceed to the next step. Go to step **13**.	Go to step **12**.
12	**CHECK STATUS OF MALFUNCTION INDICATOR LIGHT.** 1) Clear the memory using the Subaru Select Monitor or general scan tool. <Ref. to EN(H6DO)(diag)-57, Clear Memory Mode.> 2) Start the engine, and drive the vehicle 10 minutes or more.	Does the malfunction indicator light illuminate or blink?	Go to step **14**.	Go to step **13**.

GETTHEMANUALS.org

Step		Check	Yes	No
13	**CHECK CAUSE OF MISFIRE.**	Was the cause of misfire identified when the engine is running?	Finish diagnostics operation, if the engine has no abnormality.	Repair the poor contact of connector. NOTE: In this case, repair the following item: • Poor contact of ignition coil connector • Poor contact of fuel injector connector on faulty cylinders • Poor contact of ECM connector • Poor contact of coupling connector
14	**CHECK AIR INTAKE SYSTEM.**	Is there any fault in air intake system?	Repair the air intake system. NOTE: Check the following items. • Are there air leaks or air suction caused by loose or dislocated nuts and bolts? • Are there cracks or any disconnection of hoses?	Go to step **15**.
15	**CHECK MISFIRE SYMPTOM.** 1) Turn the ignition switch to ON. 2) Check for DTC. <Ref. to EN(H6DO)(diag)-43, Read Diagnostic Trouble Code (DTC).>	Does the Subaru Select Monitor or general scan tool indicate only one DTC?	Go to step **18**.	Go to step **16**.
16	**CHECK DTC ON DISPLAY.**	Is DTC P0301, P0303 and P0305 displayed?	Go to step **19**.	Go to step **17**.
17	**CHECK DTC ON DISPLAY.**	Is DTC P0302, P0304 and P0306 displayed?	Go to step **20**.	Go to step **21**.
18	**ONLY ONE CYLINDER.**	Is there any fault in the cylinder?	Repair or replace faulty parts. NOTE: Check the following items. • Spark plug • Ignition coil • Fuel injector • Compression ratio	Check DTC P0171, P0172, P0174 or P0175 using “List of Diagnostic Trouble Code (DTC)”. <Ref. to EN(H6DO)(diag)-85, List of Diagnostic Trouble Code (DTC).>

GETTHEMANUALS.org

Step		Check	Yes	No
19	**GROUP OF #1, #3 AND #5 CYLINDERS.**	Is there any fault in #1, #3 and #5 cylinders?	Repair or replace faulty parts. NOTE: Check the following items. • Spark plug • Ignition coil • Fuel injector • Compression ratio • Skipping timing chain teeth	Check DTC P0171, P0172, P0174 or P0175 using “List of Diagnostic Trouble Code (DTC)”. <Ref. to EN(H6DO)(diag)-85, List of Diagnostic Trouble Code (DTC).>
20	**GROUP OF #2, #4 AND #6 CYLINDERS.**	Is there any fault in #2, #4 and #6 cylinders?	Repair or replace faulty parts. NOTE: Check the following items. • Spark plug • Ignition coil • Fuel injector • Compression ratio • Skipping timing chain teeth	Check DTC P0171, P0172, P0174 or P0175 using “List of Diagnostic Trouble Code (DTC)”. <Ref. to EN(H6DO)(diag)-85, List of Diagnostic Trouble Code (DTC).>
21	**CYLINDER AT RANDOM.**	Is the engine idle rough?	Check DTC P0171, P0172, P0174 or P0175 using “List of Diagnostic Trouble Code (DTC)”. <Ref. to EN(H6DO)(diag)-85, List of Diagnostic Trouble Code (DTC).>	Repair or replace faulty parts. NOTE: Check the following items. • Spark plug • Ignition coil • Fuel injector • Compression ratio

GETTHEMANUALS.org

CL:DTC P0327 KNOCK SENSOR 1 CIRCUIT LOW (BANK 1 OR SINGLE SENSOR)

DTC DETECTING CONDITION:

- Immediately at fault recognition
- GENERAL DESCRIPTION <Ref. to GD(H6DO)-130, DTC P0327 KNOCK SENSOR 1 CIRCUIT LOW (BANK 1 OR SINGLE SENSOR), Diagnostic Trouble Code (DTC) Detecting Criteria.>

TROUBLE SYMPTOM:

- Poor driving performance
- Knocking occurs.

CAUTION:

After servicing or replacing faulty parts, perform Clear Memory Mode <Ref. to EN(H6DO)(diag)-57, OPERATION, Clear Memory Mode.>, and Inspection Mode <Ref. to EN(H6DO)(diag)-44, PROCEDURE, Inspection Mode.>.

WIRING DIAGRAM:

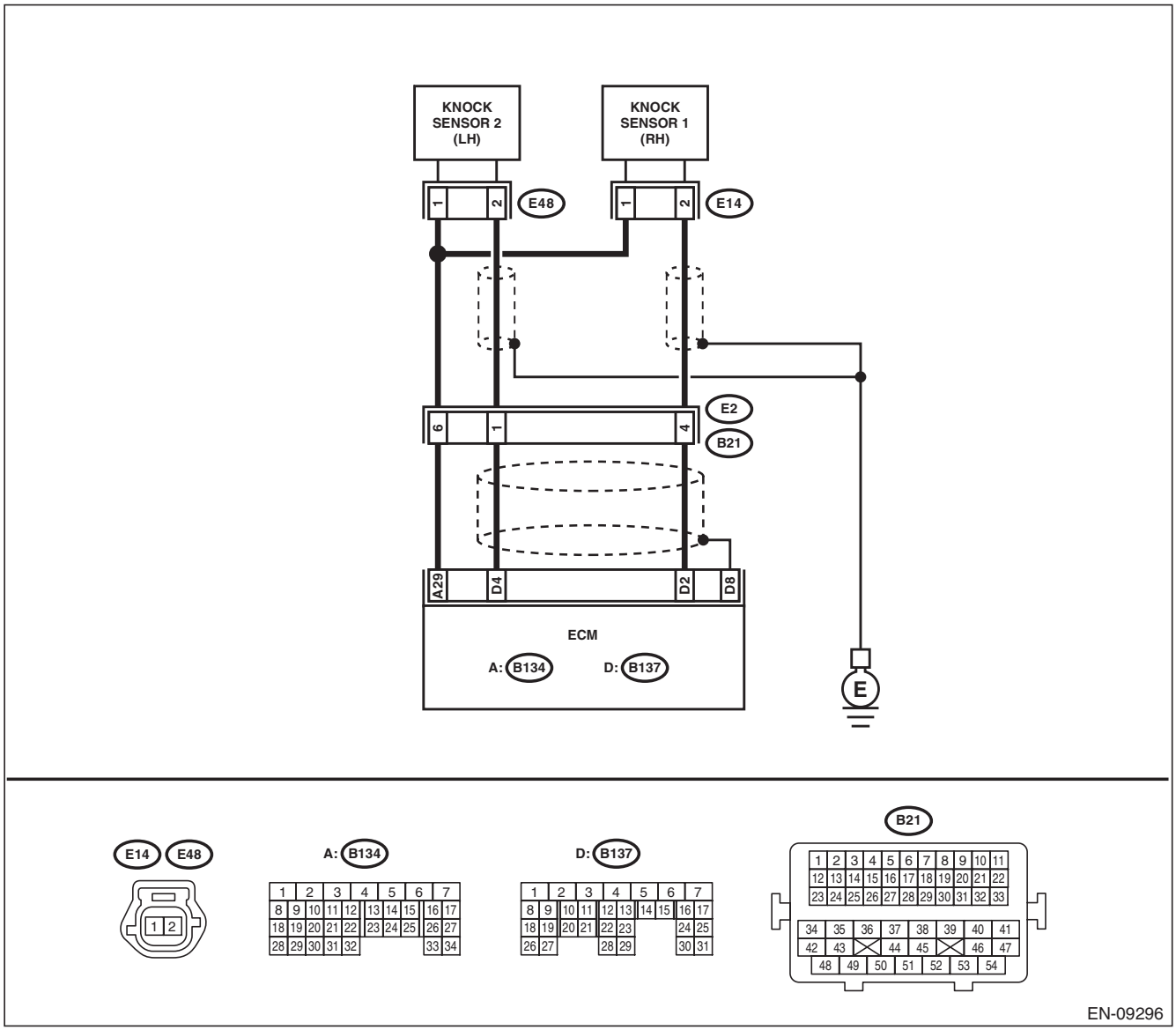

GETtheMANUALS.org

Step		Check	Yes	No
1	**CHECK HARNESS BETWEEN ECM AND KNOCK SENSOR CONNECTOR.** 1) Turn the ignition switch to OFF. 2) Disconnect the connector from ECM. 3) Measure the resistance between ECM connectors. ***Connector & terminal*** ***(B137) No. 2 — (B134) No. 29:***	Is the resistance 600 kΩ or more?	Go to step **2**.	Repair the poor contact of ECM connector.
2	**CHECK KNOCK SENSOR.** 1) Disconnect the connector from the knock sensor. 2) Measure the resistance between knock sensor terminals. ***Terminals*** ***No. 1 — No. 2:***	Is the resistance 600 kΩ or more?	Replace the knock sensor. <Ref. to FU(H6DO)-37, Knock Sensor.>	Repair the harness and connector. NOTE: In this case, repair the following item: • Open circuit in harness between ECM and knock sensor connector • Poor contact of knock sensor connector • Poor contact of coupling connector

GETtheMANUALS.org

CM:DTC P0328 KNOCK SENSOR 1 CIRCUIT HIGH (BANK 1 OR SINGLE SENSOR)

DTC DETECTING CONDITION:

- Immediately at fault recognition
- GENERAL DESCRIPTION <Ref. to GD(H6DO)-132, DTC P0328 KNOCK SENSOR 1 CIRCUIT HIGH (BANK 1 OR SINGLE SENSOR), Diagnostic Trouble Code (DTC) Detecting Criteria.>

TROUBLE SYMPTOM:

- Poor driving performance
- Knocking occurs.

CAUTION:

After servicing or replacing faulty parts, perform Clear Memory Mode <Ref. to EN(H6DO)(diag)-57, OPERATION, Clear Memory Mode.>, and Inspection Mode <Ref. to EN(H6DO)(diag)-44, PROCEDURE, Inspection Mode.>.

WIRING DIAGRAM:

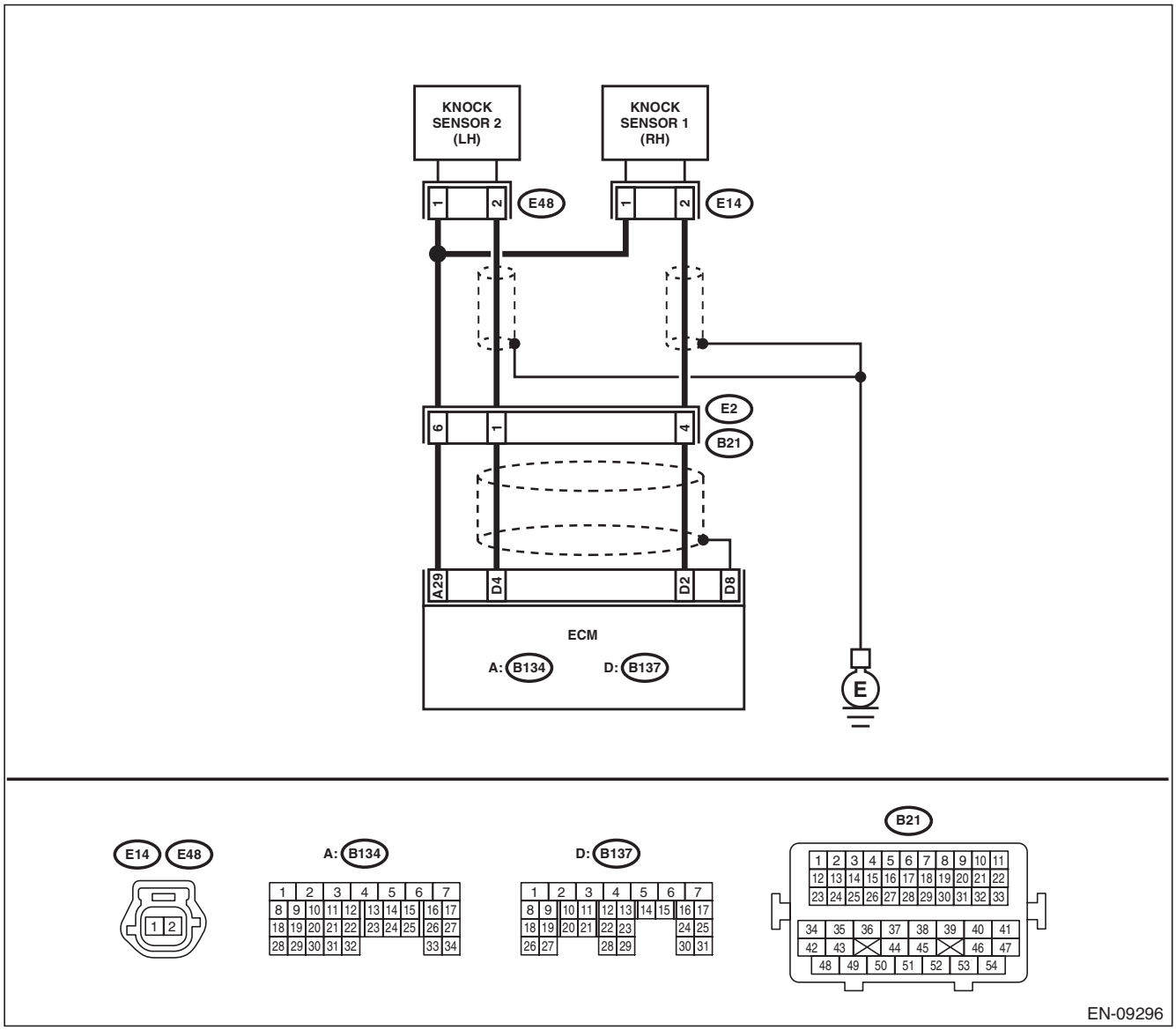

GETtheMANUALS.org

	Step	Check	Yes	No
1	**CHECK HARNESS BETWEEN ECM AND KNOCK SENSOR CONNECTOR.** 1) Turn the ignition switch to OFF. 2) Disconnect the connector from ECM. 3) Measure the resistance between ECM connectors. ***Connector & terminal*** ***(B137) No. 2 — (B134) No. 29:***	Is the resistance less than 500 kΩ?	Go to step **2**.	Go to step **3**.
2	**CHECK KNOCK SENSOR.** 1) Disconnect the connector from the knock sensor. 2) Measure the resistance between knock sensor connectors. ***Terminals*** ***No. 1 — No. 2:***	Is the resistance less than 500 kΩ?	Replace the knock sensor. <Ref. to FU(H6DO)-37, Knock Sensor.>	Repair the short circuit to ground in harness between ECM and knock sensor connector. NOTE: The harness between both connectors are shielded. Remove the shield and repair the short circuit of harness.
3	**CHECK INPUT SIGNAL OF ECM.** 1) Connect the connector to ECM. 2) Turn the ignition switch to ON. 3) Measure the voltage between ECM and chassis ground. ***Connector & terminal*** ***(B137) No. 2 (+) — Chassis ground (–):***	Is the voltage 2 V or more?	Even if DTC is detected, the circuit has returned to a normal condition at this time. Reproduce the failure, and then perform the diagnosis again. NOTE: In this case, temporary poor contact of connector, temporary open or short circuit of harness may be the cause.	Repair the poor contact of ECM connector.

GETTHEMANUALS.org

CN:DTC P0332 KNOCK SENSOR 2 CIRCUIT LOW (BANK 2)

DTC DETECTING CONDITION:

- Immediately at fault recognition
- GENERAL DESCRIPTION <Ref. to GD(H6DO)-133, DTC P0332 KNOCK SENSOR 2 CIRCUIT LOW (BANK 2), Diagnostic Trouble Code (DTC) Detecting Criteria.>

TROUBLE SYMPTOM:

- Driving performance problem
- Knocking is occurred.

CAUTION:

After servicing or replacing faulty parts, perform Clear Memory Mode <Ref. to EN(H6DO)(diag)-57, OPERATION, Clear Memory Mode.>, and Inspection Mode <Ref. to EN(H6DO)(diag)-44, PROCEDURE, Inspection Mode.>.

WIRING DIAGRAM:

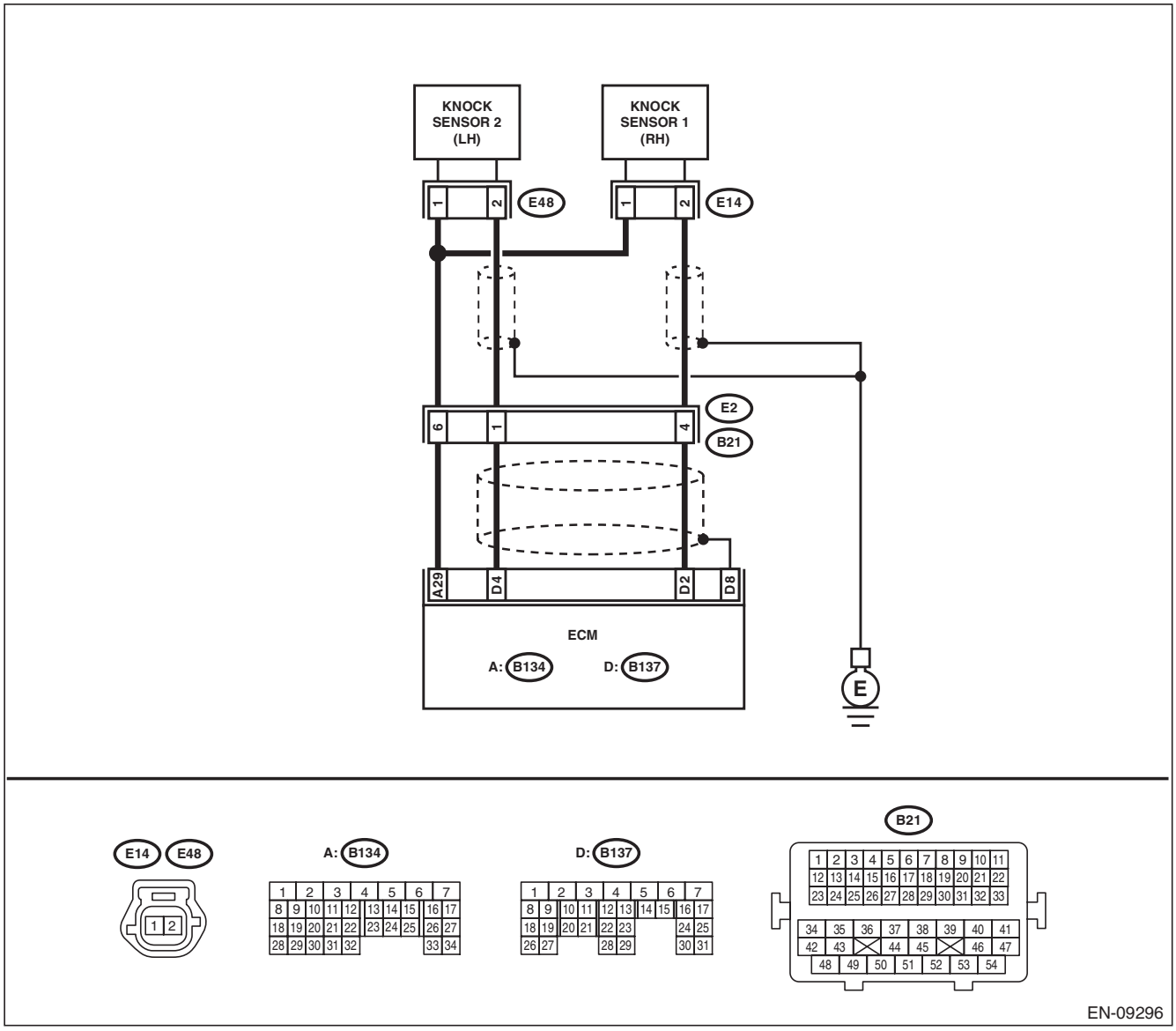

GETTHEMANUALS.org

Step		Check	Yes	No
1	**CHECK HARNESS BETWEEN ECM AND KNOCK SENSOR CONNECTOR.** 1) Turn the ignition switch to OFF. 2) Disconnect the connector from ECM. 3) Measure the resistance between ECM connectors. ***Connector & terminal*** ***(B137) No. 4 — (B134) No. 29:***	Is the resistance 600 kΩ or more?	Go to step **2**.	Repair the poor contact of ECM connector.
2	**CHECK KNOCK SENSOR.** 1) Disconnect the connector from the knock sensor. 2) Measure the resistance between knock sensor terminals. ***Terminals*** ***No. 1 — No. 2:***	Is the resistance 600 kΩ or more?	Replace the knock sensor. <Ref. to FU(H6DO)-37, Knock Sensor.>	Repair the harness and connector. NOTE: In this case, repair the following item: • Open circuit in harness between ECM and knock sensor connector • Poor contact of knock sensor connector • Poor contact of coupling connector

GETtheMANUALS.org

CO:DTC P0333 KNOCK SENSOR 2 CIRCUIT HIGH (BANK 2)

DTC DETECTING CONDITION:

- Immediately at fault recognition
- GENERAL DESCRIPTION <Ref. to GD(H6DO)-133, DTC P0333 KNOCK SENSOR 2 CIRCUIT HIGH (BANK 2), Diagnostic Trouble Code (DTC) Detecting Criteria.>

TROUBLE SYMPTOM:

- Driving performance problem
- Knocking occurs.

CAUTION:

After servicing or replacing faulty parts, perform Clear Memory Mode <Ref. to EN(H6DO)(diag)-57, OPERATION, Clear Memory Mode.>, and Inspection Mode <Ref. to EN(H6DO)(diag)-44, PROCEDURE, Inspection Mode.>.

WIRING DIAGRAM:

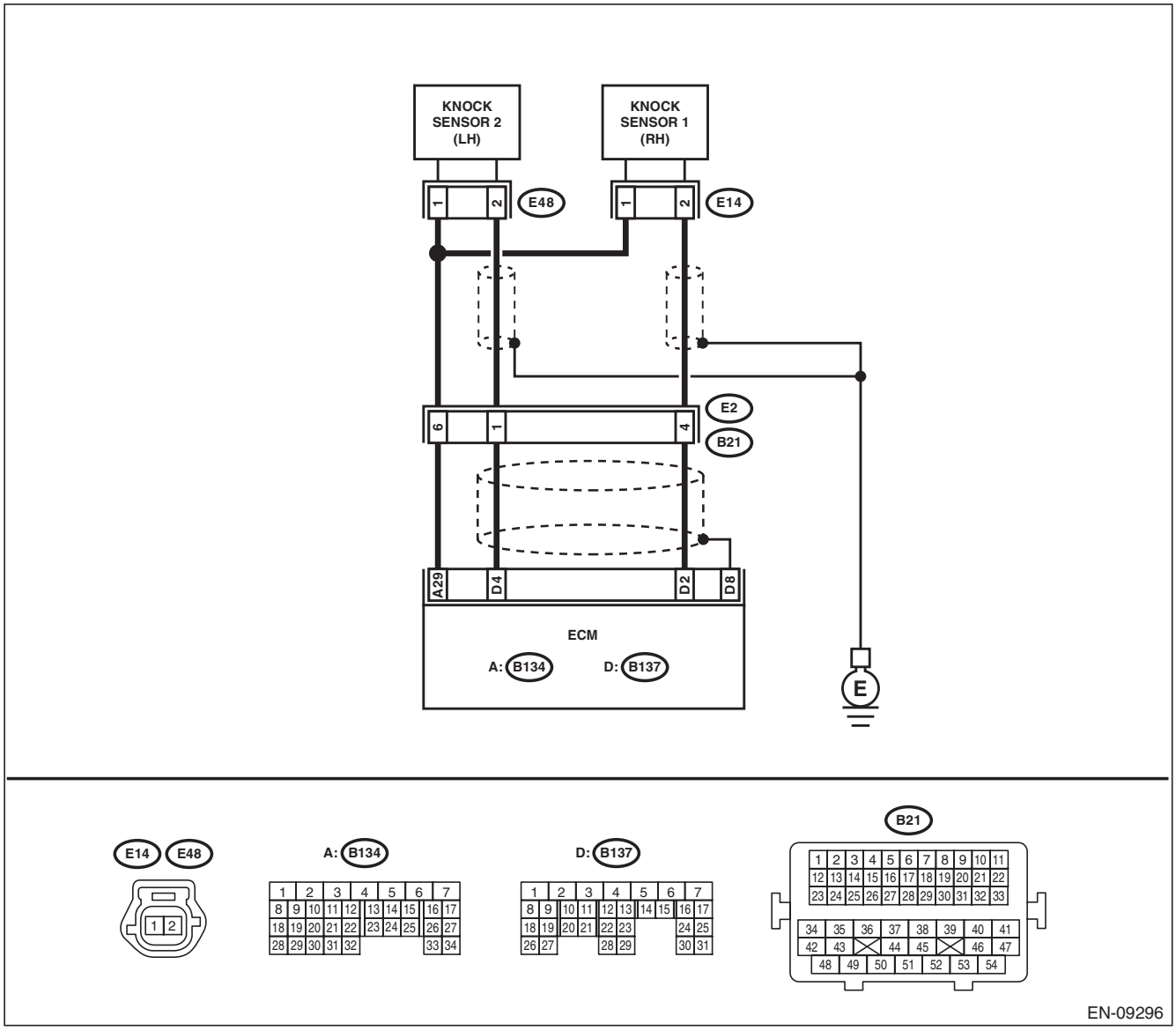

GETTHEMANUALS.org

	Step	Check	Yes	No
1	**CHECK HARNESS BETWEEN ECM AND KNOCK SENSOR CONNECTOR.** 1) Turn the ignition switch to OFF. 2) Disconnect the connector from ECM. 3) Measure the resistance between ECM connectors. ***Connector & terminal*** ***(B137) No. 4 — (B134) No. 29:***	Is the resistance less than 500 kΩ?	Go to step **2**.	Go to step **3**.
2	**CHECK KNOCK SENSOR.** 1) Disconnect the connector from the knock sensor. 2) Measure the resistance between knock sensor connectors. ***Terminals*** ***No. 1 — No. 2:***	Is the resistance less than 500 kΩ?	Replace the knock sensor. <Ref. to FU(H6DO)-37, Knock Sensor.>	Repair the short circuit to ground in harness between ECM and knock sensor connector. NOTE: The harness between both connectors are shielded. Remove the shield and repair the short circuit of harness.
3	**CHECK INPUT SIGNAL OF ECM.** 1) Connect the connector to ECM. 2) Turn the ignition switch to ON. 3) Measure the voltage between ECM and chassis ground. ***Connector & terminal*** ***(B137) No. 4 (+) — Chassis ground (–):***	Is the voltage 2 V or more?	Even if DTC is detected, the circuit has returned to a normal condition at this time. Reproduce the failure, and then perform the diagnosis again. NOTE: In this case, temporary poor contact of connector, temporary open or short circuit of harness may be the cause.	Repair the poor contact of ECM connector.

GETthemMANUALS.org

CP:DTC P0335 CRANKSHAFT POSITION SENSOR “A” CIRCUIT

DTC DETECTING CONDITION:

- Immediately at fault recognition
- GENERAL DESCRIPTION <Ref. to GD(H6DO)-134, DTC P0335 CRANKSHAFT POSITION SENSOR “A” CIRCUIT, Diagnostic Trouble Code (DTC) Detecting Criteria.>

TROUBLE SYMPTOM:

- Engine stalls.
- Failure of engine to start

CAUTION:

After servicing or replacing faulty parts, perform Clear Memory Mode <Ref. to EN(H6DO)(diag)-57, OPERATION, Clear Memory Mode.>, and Inspection Mode <Ref. to EN(H6DO)(diag)-44, PROCEDURE, Inspection Mode.>.

WIRING DIAGRAM:

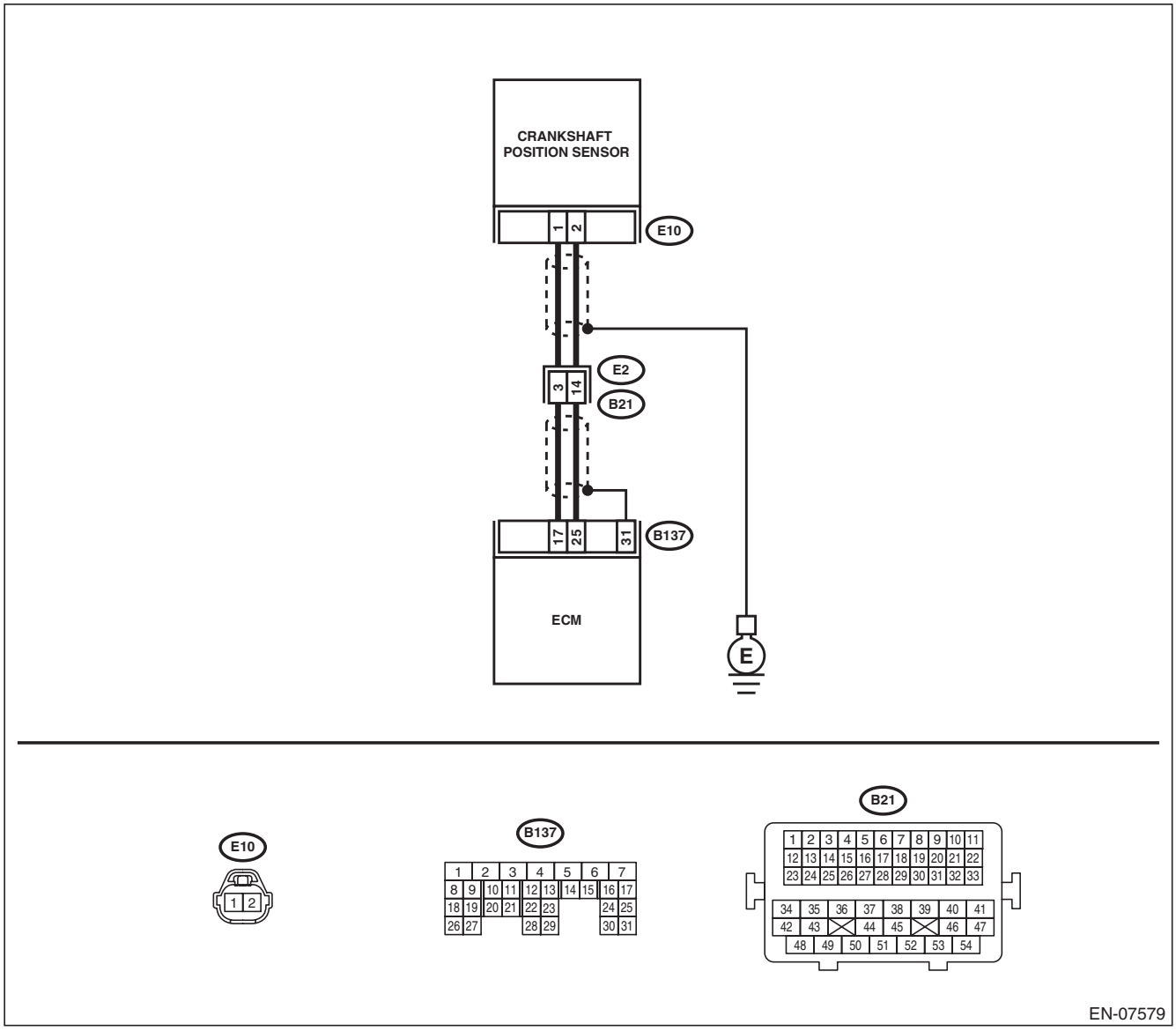

GETTHEMANUALS.org

	Step	Check	Yes	No
1	**CHECK CONDITION OF CRANKSHAFT POSITION SENSOR.**	Is the crankshaft position sensor installation bolt tightened securely?	Go to step **2**.	Tighten the crankshaft position sensor installation bolt securely.
2	**CHECK CRANKSHAFT POSITION SENSOR.** 1) Turn the ignition switch to OFF. 2) Remove the crankshaft position sensor. 3) Measure the resistance between terminals of crankshaft position sensor connector. ***Terminals*** ***No. 1 — No. 2:***	Is the resistance between 1 and 4 kΩ?	Go to step **3**.	Replace the crankshaft position sensor. <Ref. to FU(H6DO)-31, Crankshaft Position Sensor.>
3	**CHECK HARNESS BETWEEN ECM AND CRANKSHAFT POSITION SENSOR CONNECTOR.** 1) Disconnect the connector from ECM. 2) Measure the resistance of harness between ECM and crankshaft position sensor connector. ***Connector & terminal*** ***(B137) No. 17 — (E10) No. 1:*** ***(B137) No. 25 — (E10) No. 2:***	Is the resistance less than 1 Ω?	Repair the poor contact of ECM and crankshaft position sensor connector.	Repair the harness and connector. NOTE: In this case, repair the following item: • Open circuit in harness between ECM and crankshaft position sensor connector • Poor contact of coupling connector

GETtheMANUALS.org

CQ:DTC P0336 CRANKSHAFT POSITION SENSOR “A” CIRCUIT RANGE/PERFORMANCE

DTC DETECTING CONDITION:

- Detected when two consecutive driving cycles with fault occur.
- GENERAL DESCRIPTION <Ref. to GD(H6DO)-136, DTC P0336 CRANKSHAFT POSITION SENSOR “A” CIRCUIT RANGE/PERFORMANCE, Diagnostic Trouble Code (DTC) Detecting Criteria.>

TROUBLE SYMPTOM:

- Engine stalls.
- Failure of engine to start

CAUTION:

After servicing or replacing faulty parts, perform Clear Memory Mode <Ref. to EN(H6DO)(diag)-57, OPERATION, Clear Memory Mode.>, and Inspection Mode <Ref. to EN(H6DO)(diag)-44, PROCEDURE, Inspection Mode.>.

	Step	Check	Yes	No
1	**CHECK CONDITION OF CRANKSHAFT POSITION SENSOR.** Turn the ignition switch to OFF.	Is the crankshaft position sensor installation bolt tightened securely?	Go to step **2**.	Tighten the crankshaft position sensor installation bolt securely.
2	**CHECK CRANKSHAFT PLATE.**	Is there crack or damage in the crankshaft plate teeth?	Replace the crankshaft plate.	Go to step **3**.
3	**CHECK INSTALLATION CONDITION OF TIMING CHAIN.** Turn the crankshaft, and align alignment mark on crank sprocket with alignment mark on cylinder block. ST 18252AA000 CRANKSHAFT SOCKET	Is the timing chain dislocated from its proper position?	Correct the installation condition of timing chain. <Ref. to ME(H6DO)-62, Timing Chain Assembly.>	Replace the crankshaft position sensor. <Ref. to FU(H6DO)-31, Crankshaft Position Sensor.>

GETtheMANUALS.org

CR:DTC P0340 CAMSHAFT POSITION SENSOR “A” CIRCUIT (BANK 1 OR SINGLE SENSOR)

DTC DETECTING CONDITION:

- Immediately at fault recognition
- GENERAL DESCRIPTION <Ref. to GD(H6DO)-138, DTC P0340 CAMSHAFT POSITION SENSOR “A” CIRCUIT (BANK 1 OR SINGLE SENSOR), Diagnostic Trouble Code (DTC) Detecting Criteria.>

TROUBLE SYMPTOM:

- Engine stalls.
- Failure of engine to start

CAUTION:

After servicing or replacing faulty parts, perform Clear Memory Mode <Ref. to EN(H6DO)(diag)-57, OPERATION, Clear Memory Mode.>, and Inspection Mode <Ref. to EN(H6DO)(diag)-44, PROCEDURE, Inspection Mode.>.

WIRING DIAGRAM:

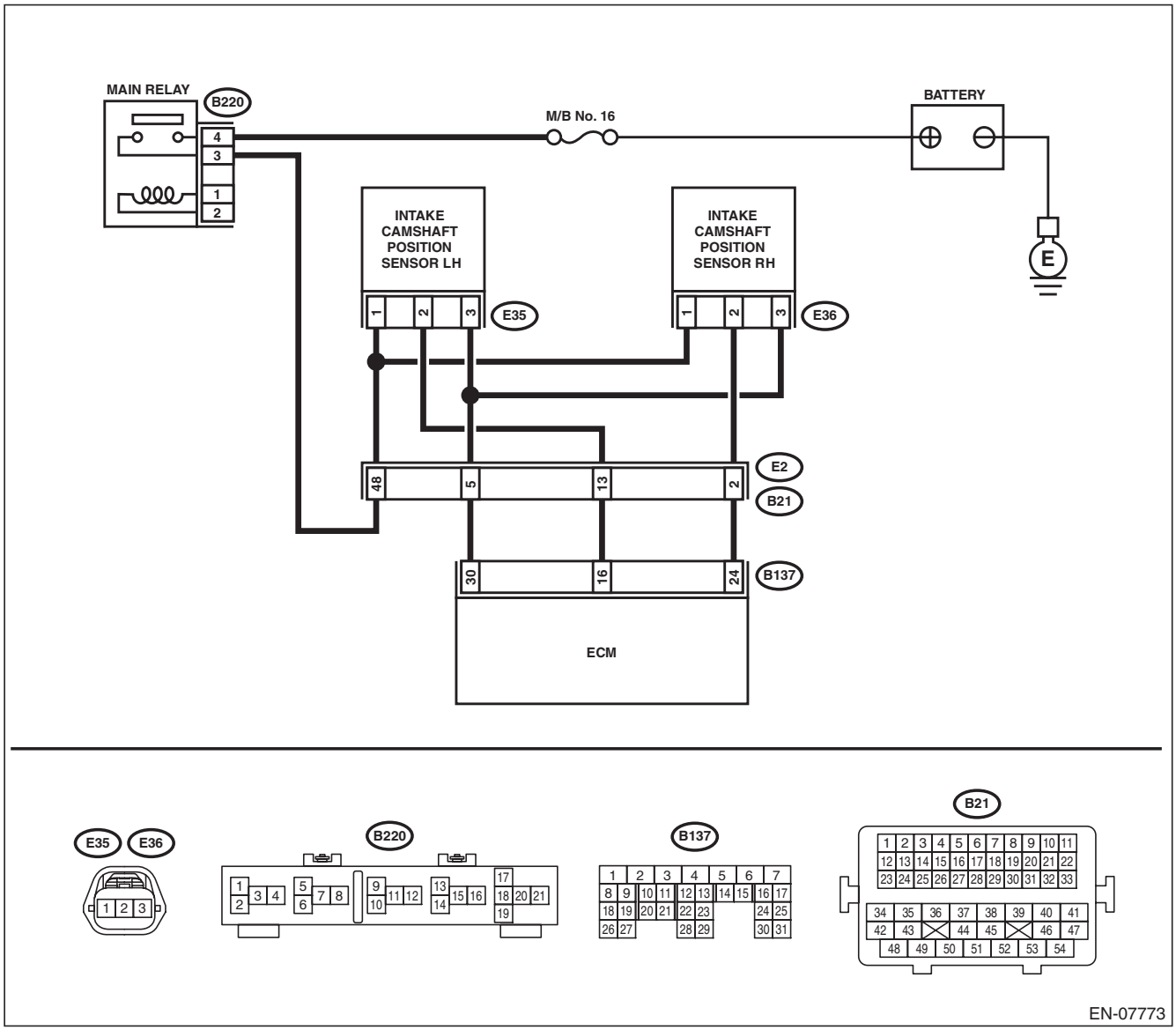

GET THEM MANUALS.org

	Step	Check	Yes	No
1	**CHECK POWER SUPPLY OF CAMSHAFT POSITION SENSOR.** 1) Turn the ignition switch to OFF. 2) Disconnect the connector from camshaft position sensor. 3) Turn the ignition switch to ON. 4) Measure the voltage between camshaft position sensor connector and engine ground. ***Connector & terminal*** ***(E36) No. 1 (+) — Engine ground (–):***	Is the voltage 10 V or more?	Go to step **2**.	Repair the harness and connector. NOTE: In this case, repair the following item: • Open circuit or short circuit to ground in harness between main relay connector and camshaft position sensor connector • Poor contact of coupling connector
2	**CHECK HARNESS BETWEEN ECM AND CAMSHAFT POSITION SENSOR CONNECTOR.** 1) Turn the ignition switch to OFF. 2) Disconnect the connector from ECM. 3) Measure the resistance between ECM and camshaft position sensor connector. ***Connector & terminal*** ***(B137) No. 24 — (E36) No. 2:*** ***(B137) No. 30 — (E36) No. 3:***	Is the resistance less than 1 Ω?	Go to step **3**.	Repair the harness and connector. NOTE: In this case, repair the following item: • Open circuit in harness between ECM and camshaft position sensor connector • Poor contact of coupling connector
3	**CHECK HARNESS BETWEEN ECM AND CAMSHAFT POSITION SENSOR CONNECTOR.** Measure the resistance between camshaft position sensor connector and engine ground. ***Connector & terminal*** ***(E36) No. 2 — Engine ground:***	Is the resistance 1 MΩ or more?	Go to step **4**.	Repair short circuit to ground in harness between ECM and camshaft position sensor connector.
4	**CHECK HARNESS BETWEEN ECM AND CAMSHAFT POSITION SENSOR CONNECTOR.** Measure the voltage between camshaft position sensor connector and engine ground. ***Connector & terminal*** ***(E36) No. 2 (+) — Engine ground (–):***	Is the voltage 5 V or more?	Repair the short circuit to power in the harness between ECM and camshaft position sensor connector.	Go to step **5**.
5	**CHECK CONDITION OF CAMSHAFT POSITION SENSOR.**	Is the camshaft position sensor installation bolt tightened securely?	Go to step **6**.	Tighten the camshaft position sensor installation bolt securely.
6	**CHECK CAMSHAFT POSITION SENSOR.** Check the waveform of the camshaft position sensor. <Ref. to EN(H6DO)(diag)-18, Engine Control Module (ECM) I/O Signal.>	Is there any abnormality in waveform?	Replace the camshaft position sensor. <Ref. to FU(H6DO)-34, Camshaft Position Sensor.>	Repair the following item. • Poor contact of ECM connector • Poor contact of camshaft position sensor connector • Poor contact of coupling connector

GETthemMANUALS.org

CS:DTC P0345 CAMSHAFT POSITION SENSOR “A” CIRCUIT (BANK 2)

DTC DETECTING CONDITION:

- Immediately at fault recognition
- GENERAL DESCRIPTION <Ref. to GD(H6DO)-140, DTC P0345 CAMSHAFT POSITION SENSOR “A” CIRCUIT (BANK 2), Diagnostic Trouble Code (DTC) Detecting Criteria.>

TROUBLE SYMPTOM:

- Engine stalls.
- Failure of engine to start

CAUTION:

After servicing or replacing faulty parts, perform Clear Memory Mode <Ref. to EN(H6DO)(diag)-57, OPERATION, Clear Memory Mode.>, and Inspection Mode <Ref. to EN(H6DO)(diag)-44, PROCEDURE, Inspection Mode.>.

WIRING DIAGRAM:

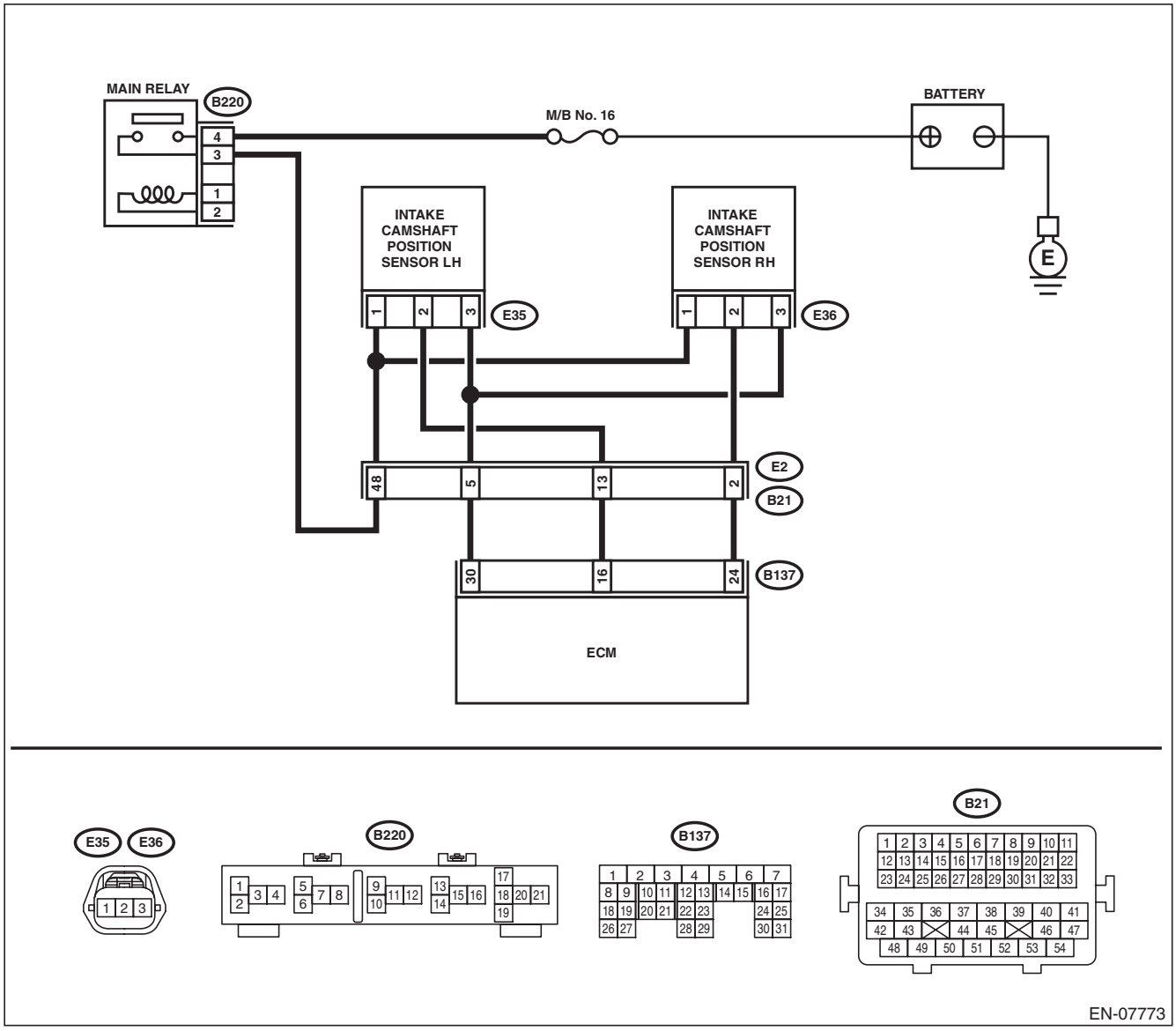

GETtheMANUALS.org

	Step	Check	Yes	No
1	**CHECK POWER SUPPLY OF CAMSHAFT POSITION SENSOR.** 1) Turn the ignition switch to OFF. 2) Disconnect the connector from camshaft position sensor. 3) Turn the ignition switch to ON. 4) Measure the voltage between camshaft position sensor connector and engine ground. ***Connector & terminal*** ***(E35) No. 1 (+) — Engine ground (–):***	Is the voltage 10 V or more?	Go to step **2**.	Repair the harness and connector. NOTE: In this case, repair the following item: • Open circuit or short circuit to ground in harness between main relay connector and camshaft position sensor connector • Poor contact of coupling connector
2	**CHECK HARNESS BETWEEN ECM AND CAMSHAFT POSITION SENSOR CONNECTOR.** 1) Turn the ignition switch to OFF. 2) Disconnect the connector from ECM. 3) Measure the resistance between ECM and camshaft position sensor connector. ***Connector & terminal*** ***(B137) No. 16 — (E35) No. 2:*** ***(B137) No. 30 — (E35) No. 3:***	Is the resistance less than 1 Ω?	Go to step **3**.	Repair the harness and connector. NOTE: In this case, repair the following item: • Open circuit in harness between ECM and camshaft position sensor connector • Poor contact of coupling connector
3	**CHECK HARNESS BETWEEN ECM AND CAMSHAFT POSITION SENSOR CONNECTOR.** Measure the resistance between camshaft position sensor connector and engine ground. ***Connector & terminal*** ***(E35) No. 2 — Engine ground:***	Is the resistance 1 MΩ or more?	Go to step **4**.	Repair short circuit to ground in harness between ECM and camshaft position sensor connector.
4	**CHECK HARNESS BETWEEN ECM AND CAMSHAFT POSITION SENSOR CONNECTOR.** Measure the voltage between camshaft position sensor connector and engine ground. ***Connector & terminal*** ***(E35) No. 2 (+) — Engine ground (–):***	Is the voltage 5 V or more?	Repair the short circuit to power in the harness between ECM and camshaft position sensor connector.	Go to step **5**.
5	**CHECK CONDITION OF CAMSHAFT POSITION SENSOR.**	Is the camshaft position sensor installation bolt tightened securely?	Go to step **6**.	Tighten the camshaft position sensor installation bolt securely.
6	**CHECK CAMSHAFT POSITION SENSOR.** Check the waveform of the camshaft position sensor. <Ref. to EN(H6DO)(diag)-18, Engine Control Module (ECM) I/O Signal.>	Is there any abnormality in waveform?	Replace the camshaft position sensor. <Ref. to FU(H6DO)-34, Camshaft Position Sensor.>	Repair the following item. • Poor contact of ECM connector • Poor contact of camshaft position sensor connector • Poor contact of coupling connector

GETthemMANUALS.org

CT:DTC P0351 IGNITION COIL A PRIMARY/SECONDARY CIRCUIT

DTC DETECTING CONDITION:

- Immediately at fault recognition
- GENERAL DESCRIPTION <Ref. to GD(H6DO)-141, DTC P0351 IGNITION COIL A PRIMARY/SECONDARY CIRCUIT, Diagnostic Trouble Code (DTC) Detecting Criteria.>

TROUBLE SYMPTOM:

- Improper idling
- Poor driving performance

CAUTION:

After servicing or replacing faulty parts, perform Clear Memory Mode <Ref. to EN(H6DO)(diag)-57, OPERATION, Clear Memory Mode.>, and Inspection Mode <Ref. to EN(H6DO)(diag)-44, PROCEDURE, Inspection Mode.>.

WIRING DIAGRAM:

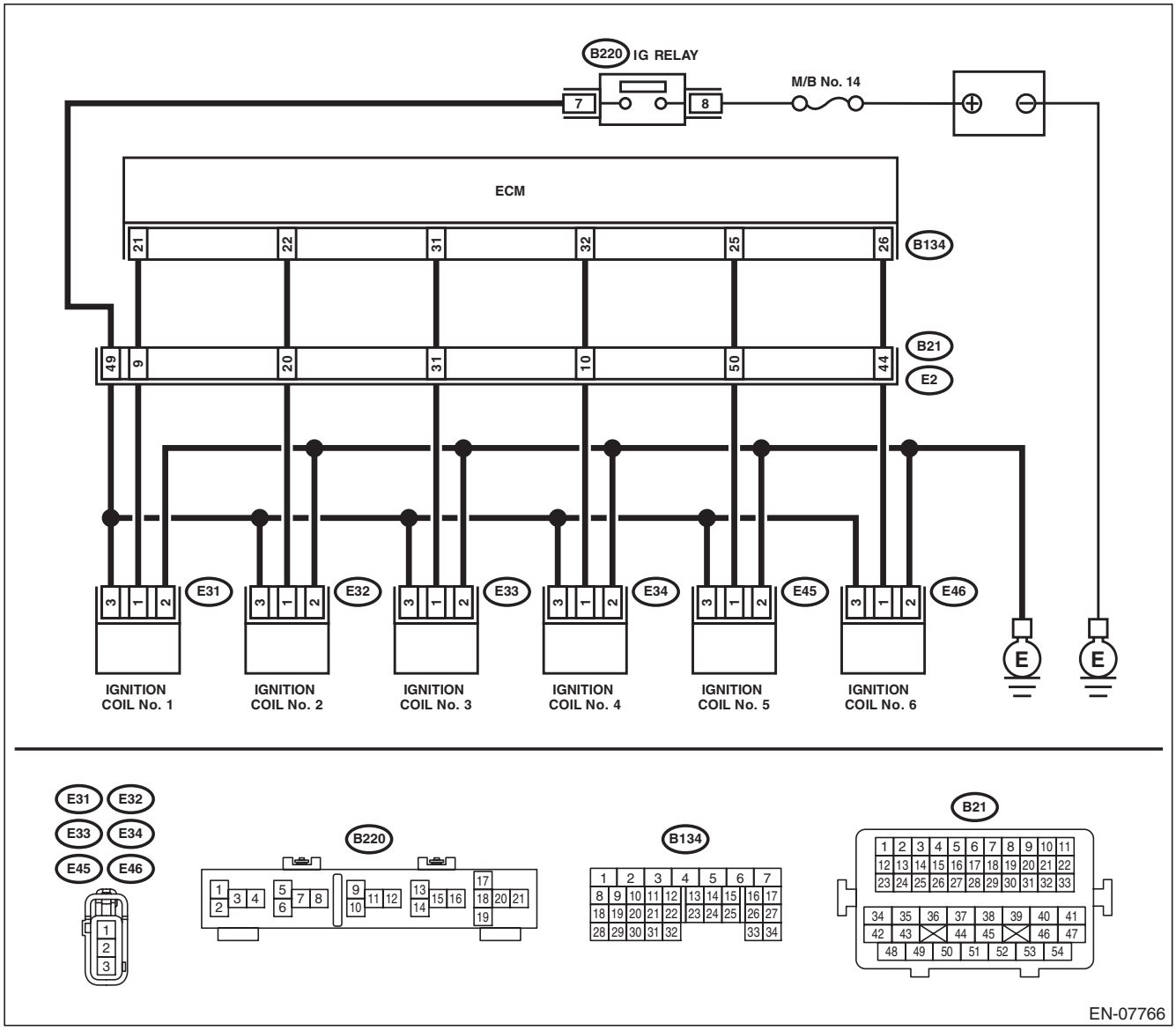

GETTHEMANUALS.org

	Step	Check	Yes	No
1	**CHECK IGNITION COIL POWER SUPPLY CIRCUIT.** 1) Turn the ignition switch to OFF. 2) Disconnect the connector from ignition coil. 3) Turn the ignition switch to ON. 4) Measure the voltage between ignition coil connector and engine ground. ***Connector & terminal*** ***DTC P0351; (E31) No. 3 (+) — Engine ground (–):*** ***DTC P0352; (E32) No. 3 (+) — Engine ground (–):*** ***DTC P0353; (E33) No. 3 (+) — Engine ground (–):*** ***DTC P0354; (E34) No. 3 (+) — Engine ground (–):*** ***DTC P0355; (E45) No. 3 (+) — Engine ground (–):*** ***DTC P0356; (E46) No. 3 (+) — Engine ground (–):***	Is the voltage 10 V or more?	Go to step **2**.	Repair the harness and connector. NOTE: In this case, repair the following item: • Open circuit or short circuit to ground in harness of power supply circuit • Blown out of fuse (M/B No. 14) • Poor contact of IG relay connector • Poor contact of coupling connector • Faulty IG relay
2	**CHECK HARNESS OF IGNITION COIL GROUND CIRCUIT.** 1) Turn the ignition switch to OFF. 2) Measure the resistance of harness between ignition coil connector and engine ground. ***Connector & terminal*** ***DTC P0351; (E31) No. 2 — Engine ground:*** ***DTC P0352; (E32) No. 2 — Engine ground:*** ***DTC P0353; (E33) No. 2 — Engine ground:*** ***DTC P0354; (E34) No. 2 — Engine ground:*** ***DTC P0355; (E45) No. 2 — Engine ground:*** ***DTC P0356; (E46) No. 2 — Engine ground:***	Is the resistance less than 5 Ω?	Go to step **3**.	Repair the open circuit in harness between ignition coil connector and engine grounding terminal.
3	**CHECK HARNESS BETWEEN ECM AND IGNITION COIL CONNECTOR.** 1) Disconnect the connector from ECM. 2) Measure the resistance between ignition coil connector and engine ground. ***Connector & terminal*** ***DTC P0351; (E31) No. 1 — Engine ground:*** ***DTC P0352; (E32) No. 1 — Engine ground:*** ***DTC P0353; (E33) No. 1 — Engine ground:*** ***DTC P0354; (E34) No. 1 — Engine ground:*** ***DTC P0355; (E45) No. 1 — Engine ground:*** ***DTC P0356; (E46) No. 1 — Engine ground:***	Is the resistance 1 MΩ or more?	Go to step **4**.	Repair the ground short circuit of harness between ECM connector and ignition coil connector.
4	**CHECK HARNESS BETWEEN ECM AND IGNITION COIL CONNECTOR.** Measure the resistance of harness between ECM connector and ignition coil connector. ***Connector & terminal*** ***DTC P0351; (B134) No. 21 — (E31) No. 1:*** ***DTC P0352; (B134) No. 22 — (E32) No. 1:*** ***DTC P0353; (B134) No. 31 — (E33) No. 1:*** ***DTC P0354; (B134) No. 32 — (E34) No. 1:*** ***DTC P0355; (B134) No. 25 — (E45) No. 1:*** ***DTC P0356; (B134) No. 26 — (E46) No. 1:***	Is the resistance less than 1 Ω?	Go to step **5**.	Repair the harness and connector. NOTE: In this case, repair the following item: • Open circuit of harness between ECM connector and the ignition coil connector • Poor contact of coupling connector
5	**CHECK FOR POOR CONTACT.** Check for poor contact of ECM connector.	Is there poor contact of ECM connector?	Repair the poor contact of ECM connector.	Go to step **6**.

GETtheMANUALS.org

Step		Check	Yes	No
6	**CHECK SPARK PLUG CONDITION.** 1) Remove the spark plug of the corresponding cylinder. <Ref. to IG(H6DO)-4, REMOVAL, Spark Plug.> 2) Check the spark plug condition. <Ref. to IG(H6DO)-5, INSPECTION, Spark Plug.>	Is the spark plug condition normal?	Replace the ignition coil. <Ref. to IG(H6DO)-7, Ignition Coil.>	Replace the spark plug. <Ref. to IG(H6DO)-4, Spark Plug.>

CU:DTC P0352 IGNITION COIL B PRIMARY/SECONDARY CIRCUIT

NOTE:
For the diagnostic procedure, refer to DTC P0351. <Ref. to EN(H6DO)(diag)-225, DTC P0351 IGNITION COIL A PRIMARY/SECONDARY CIRCUIT, Diagnostic Procedure with Diagnostic Trouble Code (DTC).>

CV:DTC P0353 IGNITION COIL C PRIMARY/SECONDARY CIRCUIT

NOTE:
For the diagnostic procedure, refer to DTC P0351. <Ref. to EN(H6DO)(diag)-225, DTC P0351 IGNITION COIL A PRIMARY/SECONDARY CIRCUIT, Diagnostic Procedure with Diagnostic Trouble Code (DTC).>

CW:DTC P0354 IGNITION COIL D PRIMARY/SECONDARY CIRCUIT

NOTE:
For the diagnostic procedure, refer to DTC P0351. <Ref. to EN(H6DO)(diag)-225, DTC P0351 IGNITION COIL A PRIMARY/SECONDARY CIRCUIT, Diagnostic Procedure with Diagnostic Trouble Code (DTC).>

CX:DTC P0355 IGNITION COIL E PRIMARY/SECONDARY CIRCUIT

NOTE:
For the diagnostic procedure, refer to DTC P0351. <Ref. to EN(H6DO)(diag)-225, DTC P0351 IGNITION COIL A PRIMARY/SECONDARY CIRCUIT, Diagnostic Procedure with Diagnostic Trouble Code (DTC).>

CY:DTC P0356 IGNITION COIL F PRIMARY/SECONDARY CIRCUIT

NOTE:
For the diagnostic procedure, refer to DTC P0351. <Ref. to EN(H6DO)(diag)-225, DTC P0351 IGNITION COIL A PRIMARY/SECONDARY CIRCUIT, Diagnostic Procedure with Diagnostic Trouble Code (DTC).>

GETthemMANUALS.org

CZ:DTC P0365 CAMSHAFT POSITION SENSOR “B” CIRCUIT (BANK 1)

DTC DETECTING CONDITION:

- Immediately at fault recognition
- GENERAL DESCRIPTION <Ref. to GD(H6DO)-143, DTC P0365 CAMSHAFT POSITION SENSOR “B” CIRCUIT (BANK 1), Diagnostic Trouble Code (DTC) Detecting Criteria.>

TROUBLE SYMPTOM:

- Engine stalls.
- Failure of engine to start

CAUTION:

After repair or replacement of faulty parts, perform Clear Memory Mode <Ref. to EN(H6DO)(diag)-57, OPERATION, Clear Memory Mode.>, and Inspection Mode <Ref. to EN(H6DO)(diag)-44, PROCEDURE, Inspection Mode.>.

WIRING DIAGRAM:

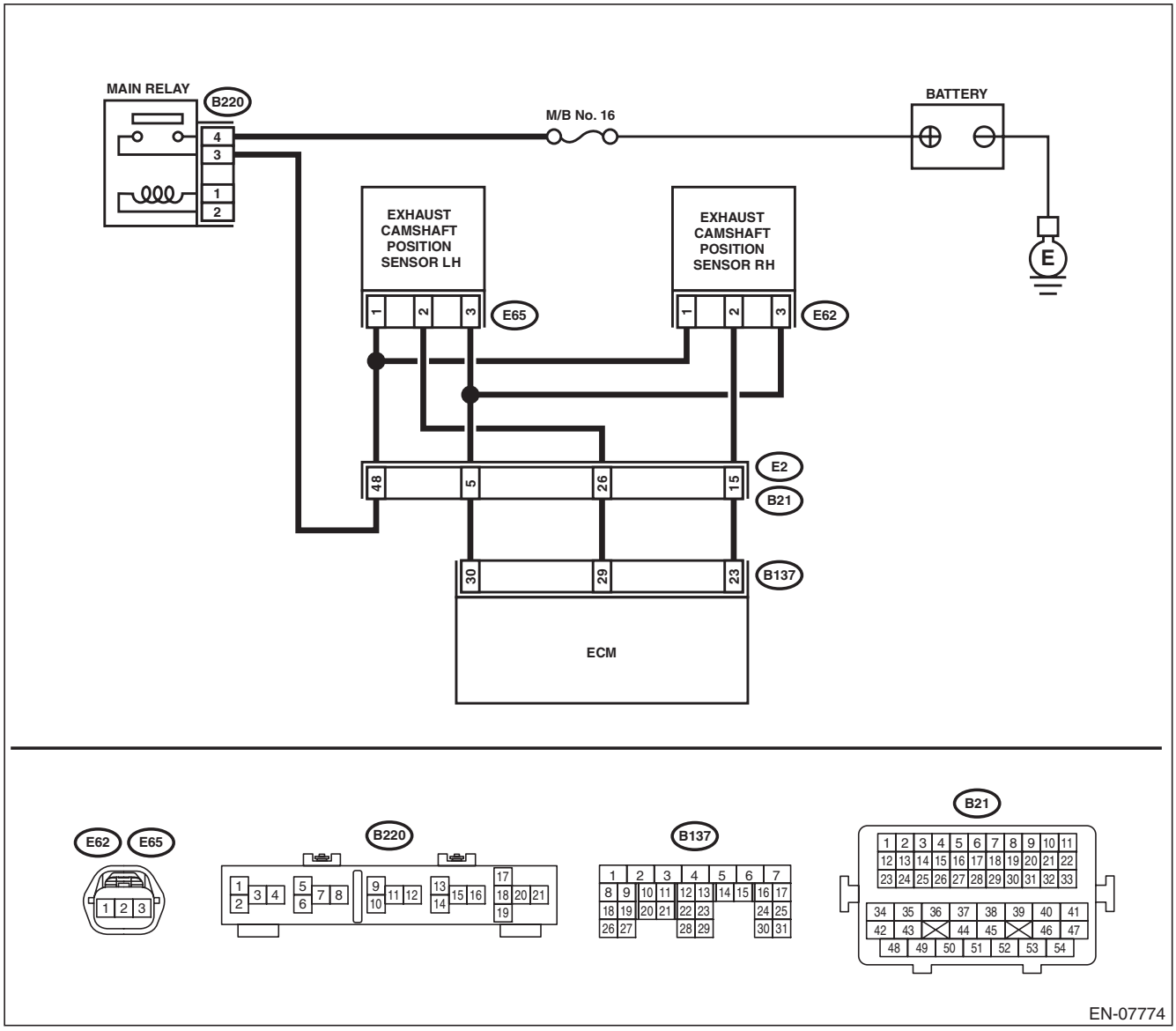

GETtheMANUALS.org

	Step	Check	Yes	No
1	**CHECK POWER SUPPLY OF CAMSHAFT POSITION SENSOR.** 1) Turn the ignition switch to OFF. 2) Disconnect the connector from camshaft position sensor. 3) Turn the ignition switch to ON. 4) Measure the voltage between camshaft position sensor connector and engine ground. ***Connector & terminal*** ***(E62) No. 1 (+) — Engine ground (–):***	Is the voltage 10 V or more?	Go to step **2**.	Repair the harness and connector. NOTE: In this case, repair the following item: • Open circuit or short circuit to ground in harness between main relay connector and camshaft position sensor connector • Poor contact of coupling connector
2	**CHECK HARNESS BETWEEN ECM AND CAMSHAFT POSITION SENSOR CONNECTOR.** 1) Turn the ignition switch to OFF. 2) Disconnect the connector from ECM. 3) Measure the resistance between ECM and camshaft position sensor connector. ***Connector & terminal*** ***(B137) No. 23 — (E62) No. 2:*** ***(B137) No. 30 — (E62) No. 3:***	Is the resistance less than 1 Ω?	Go to step **3**.	Repair the harness and connector. NOTE: In this case, repair the following item: • Open circuit in harness between ECM and camshaft position sensor connector • Poor contact of coupling connector
3	**CHECK HARNESS BETWEEN ECM AND CAMSHAFT POSITION SENSOR CONNECTOR.** Measure the resistance between camshaft position sensor connector and engine ground. ***Connector & terminal*** ***(E62) No. 2 — Engine ground:***	Is the resistance 1 MΩ or more?	Go to step **4**.	Repair short circuit to ground in harness between ECM and camshaft position sensor connector.
4	**CHECK HARNESS BETWEEN ECM AND CAMSHAFT POSITION SENSOR CONNECTOR.** Measure the voltage between camshaft position sensor connector and engine ground. ***Connector & terminal*** ***(E62) No. 2 (+) — Engine ground (–):***	Is the voltage 5 V or more?	Repair the short circuit to power in the harness between ECM and camshaft position sensor connector.	Go to step **5**.
5	**CHECK CONDITION OF CAMSHAFT POSITION SENSOR.**	Is the camshaft position sensor installation bolt tightened securely?	Go to step **6**.	Tighten the camshaft position sensor installation bolt securely.
6	**CHECK CAMSHAFT POSITION SENSOR.** Check the waveform of the camshaft position sensor. <Ref. to EN(H6DO)(diag)-18, Engine Control Module (ECM) I/O Signal.>	Is there any abnormality in waveform?	Replace the camshaft position sensor. <Ref. to FU(H6DO)-34, Camshaft Position Sensor.>	Repair the following item. • Poor contact of ECM connector • Poor contact of camshaft position sensor connector • Poor contact of coupling connector

GETthemANUALS.org

DA:DTC P0390 CAMSHAFT POSITION SENSOR “B” CIRCUIT (BANK 2)

DTC DETECTING CONDITION:

- Immediately at fault recognition
- GENERAL DESCRIPTION <Ref. to GD(H6DO)-145, DTC P0390 CAMSHAFT POSITION SENSOR “B” CIRCUIT (BANK 2), Diagnostic Trouble Code (DTC) Detecting Criteria.>

TROUBLE SYMPTOM:

- Engine stalls.
- Failure of engine to start

CAUTION:

After repair or replacement of faulty parts, perform Clear Memory Mode <Ref. to EN(H6DO)(diag)-57, OPERATION, Clear Memory Mode.>, and Inspection Mode <Ref. to EN(H6DO)(diag)-44, PROCEDURE, Inspection Mode.>.

WIRING DIAGRAM:

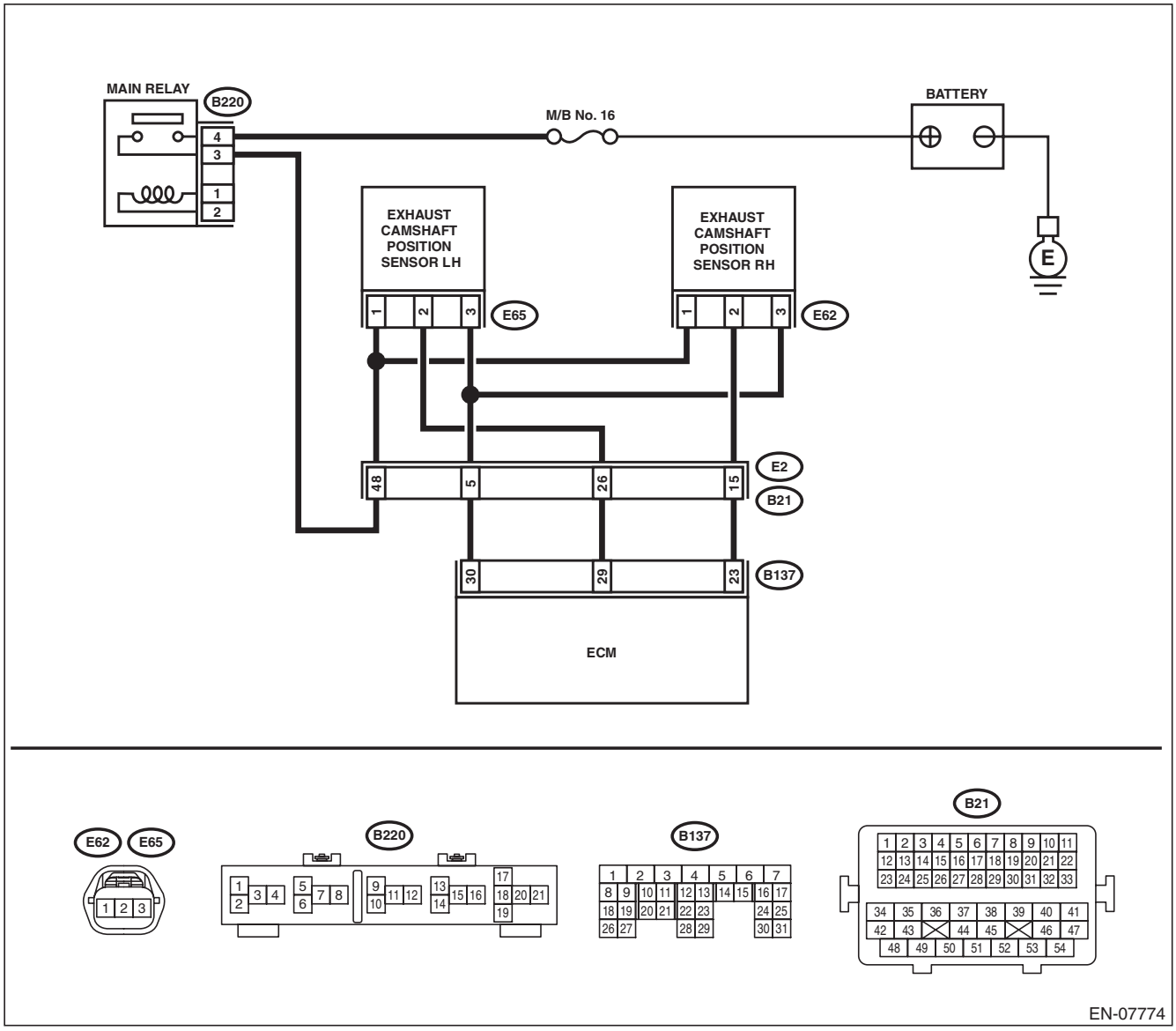

GETtheMANUALS.org

	Step	Check	Yes	No
1	**CHECK POWER SUPPLY OF CAMSHAFT POSITION SENSOR.** 1) Turn the ignition switch to OFF. 2) Disconnect the connector from camshaft position sensor. 3) Turn the ignition switch to ON. 4) Measure the voltage between camshaft position sensor connector and engine ground. ***Connector & terminal*** ***(E65) No. 1 (+) — Engine ground (–):***	Is the voltage 10 V or more?	Go to step **2**.	Repair the harness and connector. NOTE: In this case, repair the following item: • Open circuit or short circuit to ground in harness between main relay connector and camshaft position sensor connector • Poor contact of coupling connector
2	**CHECK HARNESS BETWEEN ECM AND CAMSHAFT POSITION SENSOR CONNECTOR.** 1) Turn the ignition switch to OFF. 2) Disconnect the connector from ECM. 3) Measure the resistance between ECM and camshaft position sensor connector. ***Connector & terminal*** ***(B137) No. 29 — (E65) No. 2:*** ***(B137) No. 30 — (E65) No. 3:***	Is the resistance less than 1 Ω?	Go to step **3**.	Repair the harness and connector. NOTE: In this case, repair the following item: • Open circuit in harness between ECM and camshaft position sensor connector • Poor contact of coupling connector
3	**CHECK HARNESS BETWEEN ECM AND CAMSHAFT POSITION SENSOR CONNECTOR.** Measure the resistance between camshaft position sensor connector and engine ground. ***Connector & terminal*** ***(E65) No. 2 — Engine ground:***	Is the resistance 1 MΩ or more?	Go to step **4**.	Repair short circuit to ground in harness between ECM and camshaft position sensor connector.
4	**CHECK HARNESS BETWEEN ECM AND CAMSHAFT POSITION SENSOR CONNECTOR.** Measure the voltage between camshaft position sensor connector and engine ground. ***Connector & terminal*** ***(E65) No. 2 (+) — Engine ground (–):***	Is the voltage 5 V or more?	Repair the short circuit to power in the harness between ECM and camshaft position sensor connector.	Go to step **5**.
5	**CHECK CONDITION OF CAMSHAFT POSITION SENSOR.**	Is the camshaft position sensor installation bolt tightened securely?	Go to step **6**.	Tighten the camshaft position sensor installation bolt securely.
6	**CHECK CAMSHAFT POSITION SENSOR.** Check the waveform of the camshaft position sensor. <Ref. to EN(H6DO)(diag)-18, Engine Control Module (ECM) I/O Signal.>	Is there any abnormality in waveform?	Replace the camshaft position sensor. <Ref. to FU(H6DO)-34, Camshaft Position Sensor.>	Repair the following item. • Poor contact of ECM connector • Poor contact of camshaft position sensor connector • Poor contact of coupling connector

GETthemMANUALS.org

DB:DTC P0400 EXHAUST GAS RECIRCULATION FLOW

DTC DETECTING CONDITION:

- Detected when two consecutive driving cycles with fault occur.
- GENERAL DESCRIPTION <Ref. to GD(H6DO)-146, DTC P0400 EXHAUST GAS RECIRCULATION FLOW, Diagnostic Trouble Code (DTC) Detecting Criteria.>

TROUBLE SYMPTOM:

- Movement performance problem when engine is low speed.
- Improper idling
- Movement performance problem

CAUTION:

After servicing or replacing faulty parts, perform Clear Memory Mode <Ref. to EN(H6DO)(diag)-57, OPERATION, Clear Memory Mode.>, and Inspection Mode <Ref. to EN(H6DO)(diag)-44, PROCEDURE, Inspection Mode.>.

	Step	Check	Yes	No
1	**CHECK CURRENT DATA.** 1) Start the engine. 2) Read the value of «Mani. Absolute Pressure» using the Subaru Select Monitor or a general scan tool. NOTE: • Subaru Select Monitor For detailed operation procedures, refer to “READ CURRENT DATA FOR ENGINE”. <Ref. to EN(H6DO)(diag)-35, Subaru Select Monitor.> • General scan tool For detailed operation procedures, refer to the general scan tool operation manual.	Is the value of «Mani. Absolute Pressure» 53.3 kPa (400 mmHg, 15.75 inHg) or more?	Make sure that the EGR control valve, manifold absolute pressure sensor and throttle body are installed securely.	Go to step **2**.
2	**CHECK EGR CONTROL VALVE.** Remove the EGR control valve.	Are there any holes, clogged lines or foreign matters in the EGR system?	Repair the EGR system.	Replace EGR control valve. <Ref. to FU(H6DO)-42, EGR Valve.>

GETtheMANUALS.org

DC:DTC P0420 CATALYST SYSTEM EFFICIENCY BELOW THRESHOLD (BANK 1)

DTC DETECTING CONDITION:

- Detected when two consecutive driving cycles with fault occur.
- GENERAL DESCRIPTION <Ref. to GD(H6DO)-149, DTC P0420 CATALYST SYSTEM EFFICIENCY BELOW THRESHOLD (BANK 1), Diagnostic Trouble Code (DTC) Detecting Criteria.>

TROUBLE SYMPTOM:

- Engine stalls.
- Idle mixture is out of specifications.

CAUTION:

After servicing or replacing faulty parts, perform Clear Memory Mode <Ref. to EN(H6DO)(diag)-57, OPERATION, Clear Memory Mode.>, and Inspection Mode <Ref. to EN(H6DO)(diag)-44, PROCEDURE, Inspection Mode.>.

WIRING DIAGRAM:

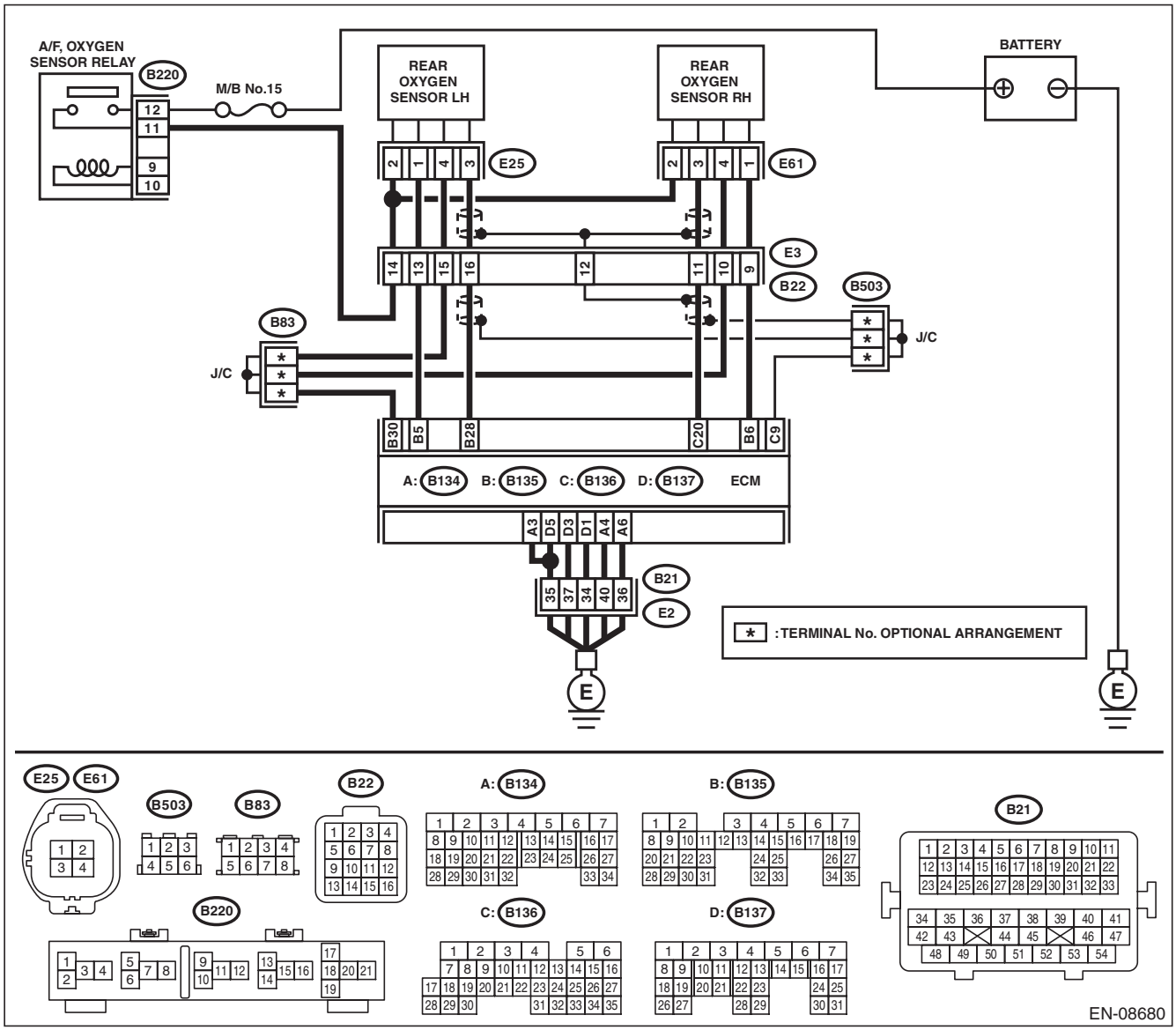

GETTHEMANUALS.org

	Step	Check	Yes	No
1	**CHECK EXHAUST SYSTEM.** Check for gas leaks or air suction caused by loose or dislocated nuts and bolts, and open hole at exhaust pipes. NOTE: Check the following positions. • Between cylinder head and front exhaust pipe • Between front exhaust pipe and front catalytic converter • Between front catalytic converter and rear catalytic converter • Loose or improperly attached front oxygen (A/F) sensor or rear oxygen sensor	Is there any fault in exhaust system?	Repair or replace the exhaust system. <Ref. to EX(H6DO)-2, General Description.>	Go to step **2**.
2	**CHECK WAVEFORM DATA ON THE SUBARU SELECT MONITOR (WHILE DRIVING).** 1) Drive at a constant speed between 80 — 112 km/h (50 — 70 MPH). 2) After 5 minutes have elapsed in the condition of step 1), use the Subaru Select Monitor while still driving to read the waveform data. • At normal condition 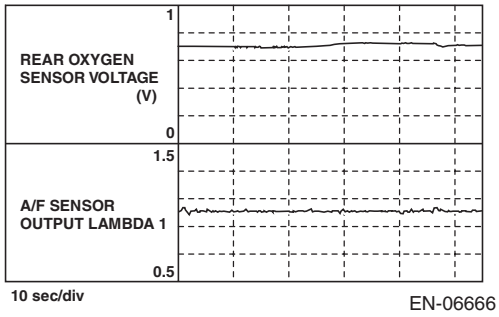 EN-06666 • At abnormal condition (numerous inversion) 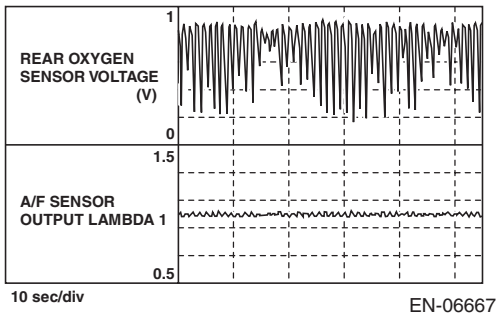 EN-06667	Is a normal waveform displayed?	Even if DTC is detected, the circuit has returned to a normal condition at this time. Reproduce the failure, and then perform the diagnosis again. NOTE: In this case, temporary poor contact of connector, temporary open or short circuit of harness may be the cause.	Go to step **3**.

GETTHEMANUALS.org

Step		Check	Yes	No
3	**CHECK WAVEFORM DATA ON THE SUBARU SELECT MONITOR (WHILE IDLING).** 1) Run the engine at idle. 2) In the condition of step 1), use the Subaru Select Monitor to read the waveform data. • At normal condition 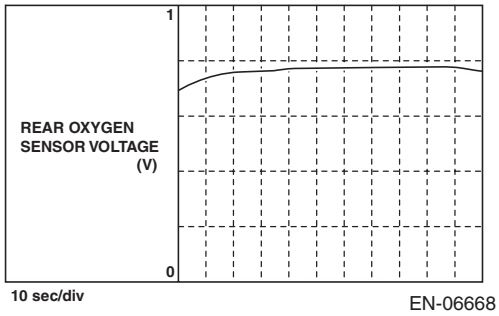 EN-06668 • At abnormal condition 1 (numerous inversion) 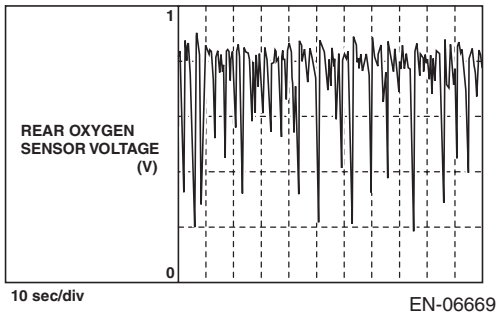 EN-06669 • At abnormal condition 2 (noise input) 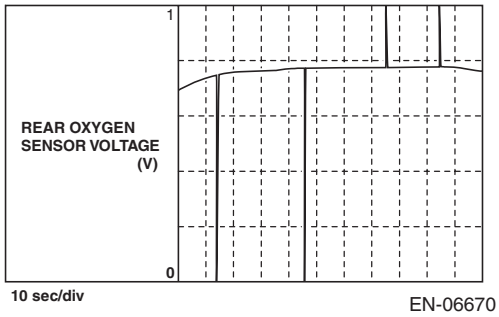 EN-06670	Is a normal waveform displayed?	Go to step **4**.	• The waveform is displayed at abnormal condition 1: Go to step **4**. • The waveform is displayed at abnormal condition 2: Go to step **5**.
4	**CHECK CATALYTIC CONVERTER.**	Is the catalytic converter damaged?	Replace the catalytic converter. <Ref. to EC(H6DO)-3, Front Catalytic Converter.>	Go to step **5**.
5	**CHECK REAR OXYGEN SENSOR CONNECTOR AND COUPLING CONNECTOR.**	Has water entered the connector?	Completely remove any water inside.	Go to step **6**.

GETTHEMANUALS.org

	Step	Check	Yes	No
6	**CHECK HARNESS BETWEEN ECM AND REAR OXYGEN SENSOR CONNECTOR.** 1) Turn the ignition switch to OFF. 2) Disconnect the connector from ECM and rear oxygen sensor. 3) Measure the resistance of harness between ECM and rear oxygen sensor connector. ***Connector & terminal*** ***(B136) No. 20 — (E61) No. 3:*** ***(B135) No. 30 — (E61) No. 4:*** ***(B135) No. 28 — (E25) No. 3:*** ***(B135) No. 30 — (E25) No. 4:***	Is the resistance less than 1 Ω?	Go to step **7**.	Repair the harness and connector. NOTE: In this case, repair the following item: • Open circuit in harness between ECM and rear oxygen sensor connector • Poor contact of coupling connector
7	**CHECK HARNESS BETWEEN ECM AND REAR OXYGEN SENSOR CONNECTOR.** 1) Connect the connector to ECM. 2) Turn the ignition switch to ON. 3) Measure the voltage between rear oxygen sensor connector and chassis ground. ***Connector & terminal*** ***(E61) No. 3 (+) — Chassis ground (–):*** ***(E25) No. 3 (+) — Chassis ground (–):***	Is the voltage 0.2 — 0.5 V?	Go to step **8**.	Repair the harness and connector. NOTE: Repair the following locations. • Open circuit in harness between ECM and rear oxygen sensor connector • Poor contact of ECM connector • Poor contact of coupling connector
8	**CHECK REAR OXYGEN SENSOR SHIELD.** 1) Turn the ignition switch to OFF. 2) Expose the rear oxygen sensor connector body side harness sensor shield. 3) Measure the resistance between sensor shield and chassis ground.	Is the resistance less than 1 Ω?	Replace the rear oxygen sensor. <Ref. to FU(H6DO)-52, Rear Oxygen Sensor.>	Repair the open circuit of rear oxygen sensor harness.

GETTHEMANUALS.org

DD:DTC P0442 EVAPORATIVE EMISSION CONTROL SYSTEM LEAK DETECTED (SMALL LEAK)

DTC DETECTING CONDITION:

- Detected when two consecutive driving cycles with fault occur.
- GENERAL DESCRIPTION <Ref. to GD(H6DO)-151, DTC P0442 EVAPORATIVE EMISSION CONTROL SYSTEM LEAK DETECTED (SMALL LEAK), Diagnostic Trouble Code (DTC) Detecting Criteria.>

TROUBLE SYMPTOM:

- Fuel odor
- There is a hole of more than 1.0 mm (0.04 in) dia. in evaporation system or fuel tank.

CAUTION:

After servicing or replacing faulty parts, perform Clear Memory Mode <Ref. to EN(H6DO)(diag)-57, OPERATION, Clear Memory Mode.>, and Inspection Mode <Ref. to EN(H6DO)(diag)-44, PROCEDURE, Inspection Mode.>.

	Step	Check	Yes	No
1	**CHECK FUEL FILLER CAP.** 1) Turn the ignition switch to OFF. 2) Check the fuel filler cap. NOTE: The DTC is stored in memory if fuel filler cap is or was loose or if the cap chain has caught while tightening.	Is the fuel filler cap tightened securely?	Go to step **2**.	Tighten fuel filler cap securely.
2	**CHECK FUEL FILLER CAP.**	Is the fuel filler cap genuine?	Go to step **3**.	Replace with a genuine fuel filler cap.
3	**CHECK FUEL FILLER PIPE GASKET.**	Is there any damage to the seal between fuel filler cap and fuel filler pipe?	Repair or replace the fuel filler cap and fuel filler pipe. <Ref. to FU(H6DO)-68, Fuel Filler Pipe.>	Go to step **4**.
4	**CHECK DRAIN VALVE.** 1) Install the delivery (test) mode fuse. **CAUTION:** **Do not use any fuses that are installed on the vehicle.** 2) Turn the ignition switch to ON. 3) Operate the drain valve using the Subaru Select Monitor. NOTE: The drain valve can be operated using Subaru Select Monitor. For detailed procedures, refer to “SYSTEM OPERATION CHECK MODE”. <Ref. to EN(H6DO)(diag)-58, System Operation Check Mode.>	Does the drain valve operate?	Go to step **5**.	Replace the drain valve. <Ref. to EC(H6DO)-18, Drain Valve.>
5	**CHECK PURGE CONTROL SOLENOID VALVE.** Operate the purge control solenoid valve using the Subaru Select Monitor. NOTE: Purge control solenoid valve operation can be executed using Subaru Select Monitor. For detailed procedures, refer to “SYSTEM OPERATION CHECK MODE”. <Ref. to EN(H6DO)(diag)-58, System Operation Check Mode.>	Does the purge control solenoid valve operate?	Go to step **6**.	Replace the purge control solenoid valve. <Ref. to EC(H6DO)-10, Purge Control Solenoid Valve.>

GETTHEMANUALS.org

Step		Check	Yes	No
6	**CHECK EVAPORATIVE EMISSION CONTROL SYSTEM LINE.** 1) Turn the ignition switch to OFF. 2) Remove the delivery (test) mode fuse.	Is there any hole of more than 1.0 mm (0.04 in) dia. on evaporation line?	Repair or replace the evaporation line. <Ref. to FU(H6DO)-80, Fuel Delivery and Evaporation Lines.>	Go to step **7**.
7	**CHECK CANISTER.**	Is the canister damaged or is there a hole of more than 1.0 mm (0.04 in) dia. in it?	Repair or replace the canister. <Ref. to EC(H6DO)-6, Canister.>	Go to step **8**.
8	**CHECK FUEL TANK.** Remove the fuel tank. <Ref. to FU(H6DO)-61, Fuel Tank.>	Is the fuel tank damaged or is there any hole of more than 1.0 mm (0.04 in) dia. in it?	Repair or replace the fuel tank. <Ref. to FU(H6DO)-61, Fuel Tank.>	Go to step **9**.
9	**CHECK ANY OTHER MECHANICAL TROUBLE IN EVAPORATIVE EMISSION CONTROL SYSTEM.**	Is there any hole of more than 1.0 mm (0.04 in) dia., crack, clogging, or disconnection, bend, misconnection of hoses or pipes in evaporative emission control system?	Repair or replace the hoses or pipes.	Repair the poor contact of ECM connector.

GETTHEMANUALS.org

DE:DTC P0447 EVAPORATIVE EMISSION CONTROL SYSTEM VENT CONTROL CIRCUIT OPEN

DTC DETECTING CONDITION:

- Immediately at fault recognition
- GENERAL DESCRIPTION <Ref. to GD(H6DO)-165, DTC P0447 EVAPORATIVE EMISSION CONTROL SYSTEM VENT CONTROL CIRCUIT OPEN, Diagnostic Trouble Code (DTC) Detecting Criteria.>

CAUTION:

After servicing or replacing faulty parts, perform Clear Memory Mode <Ref. to EN(H6DO)(diag)-57, OPERATION, Clear Memory Mode.>, and Inspection Mode <Ref. to EN(H6DO)(diag)-44, PROCEDURE, Inspection Mode.>.

WIRING DIAGRAM:

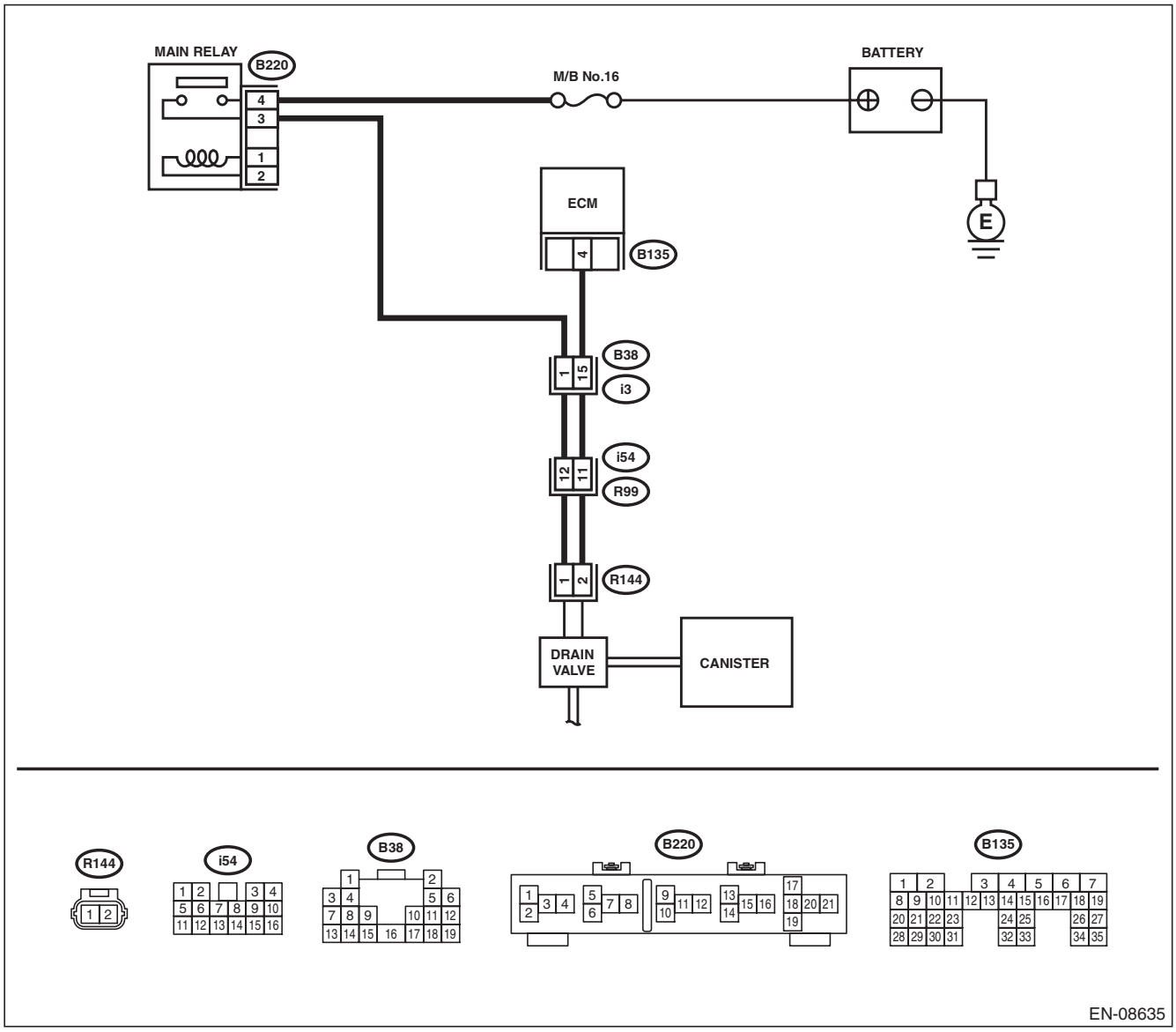

GETTHEMANUALS.org

	Step	Check	Yes	No
1	**CHECK OUTPUT SIGNAL OF ECM.** 1) Turn the ignition switch to ON. 2) Measure the voltage between ECM and chassis ground. ***Connector & terminal*** ***(B135) No. 4 (+) — Chassis ground (–):***	Is the voltage 10 V or more?	Go to step **2**.	Go to step **3**.
2	**CHECK FOR POOR CONTACT.** Check for poor contact of ECM connector.	Is there poor contact of ECM connector?	Repair the poor contact of ECM connector.	Even if DTC is detected, the circuit has returned to a normal condition at this time. Reproduce the failure, and then perform the diagnosis again. NOTE: In this case, temporary open or short circuit of harness or temporary poor contact of connector may be the cause.
3	**CHECK POWER SUPPLY TO DRAIN VALVE.** Measure the voltage between drain valve and chassis ground. ***Connector & terminal*** ***(R144) No. 1 (+) — Chassis ground (–):***	Is the voltage 10 V or more?	Go to step **4**.	Repair the power supply circuit.
4	**CHECK HARNESS BETWEEN ECM AND DRAIN VALVE CONNECTOR.** 1) Turn the ignition switch to OFF. 2) Disconnect the connectors from the ECM and drain valve. 3) Measure the resistance between the drain valve connector and chassis ground. ***Connector & terminal*** ***(R144) No. 2 — Chassis ground:***	Is the resistance 1 MΩ or more?	Go to step **5**.	Repair the ground short circuit of harness between ECM and drain valve connector.
5	**CHECK HARNESS BETWEEN ECM AND DRAIN VALVE CONNECTOR.** Measure the resistance of harness between ECM and drain valve connector. ***Connector & terminal*** ***(B135) No. 4 — (R144) No. 2:***	Is the resistance less than 1 Ω?	Go to step **6**.	Repair the harness and connector. NOTE: In this case, repair the following item: • Open circuit of harness between ECM and drain valve connector • Poor contact of coupling connector
6	**CHECK DRAIN VALVE.** Measure the resistance between drain valve terminals. ***Terminals*** ***No. 1 — No. 2:***	Is the resistance 10 — 100 Ω?	Repair the poor contact of drain valve connector.	Replace the drain valve. <Ref. to EC(H6DO)-18, Drain Valve.>

GETthemMANUALS.org

DF:DTC P0448 EVAPORATIVE EMISSION CONTROL SYSTEM VENT CONTROL CIRCUIT SHORTED

DTC DETECTING CONDITION:

- Immediately at fault recognition
- GENERAL DESCRIPTION <Ref. to GD(H6DO)-167, DTC P0448 EVAPORATIVE EMISSION CONTROL SYSTEM VENT CONTROL CIRCUIT SHORTED, Diagnostic Trouble Code (DTC) Detecting Criteria.>

CAUTION:

After servicing or replacing faulty parts, perform Clear Memory Mode <Ref. to EN(H6DO)(diag)-57, OPERATION, Clear Memory Mode.>, and Inspection Mode <Ref. to EN(H6DO)(diag)-44, PROCEDURE, Inspection Mode.>.

WIRING DIAGRAM:

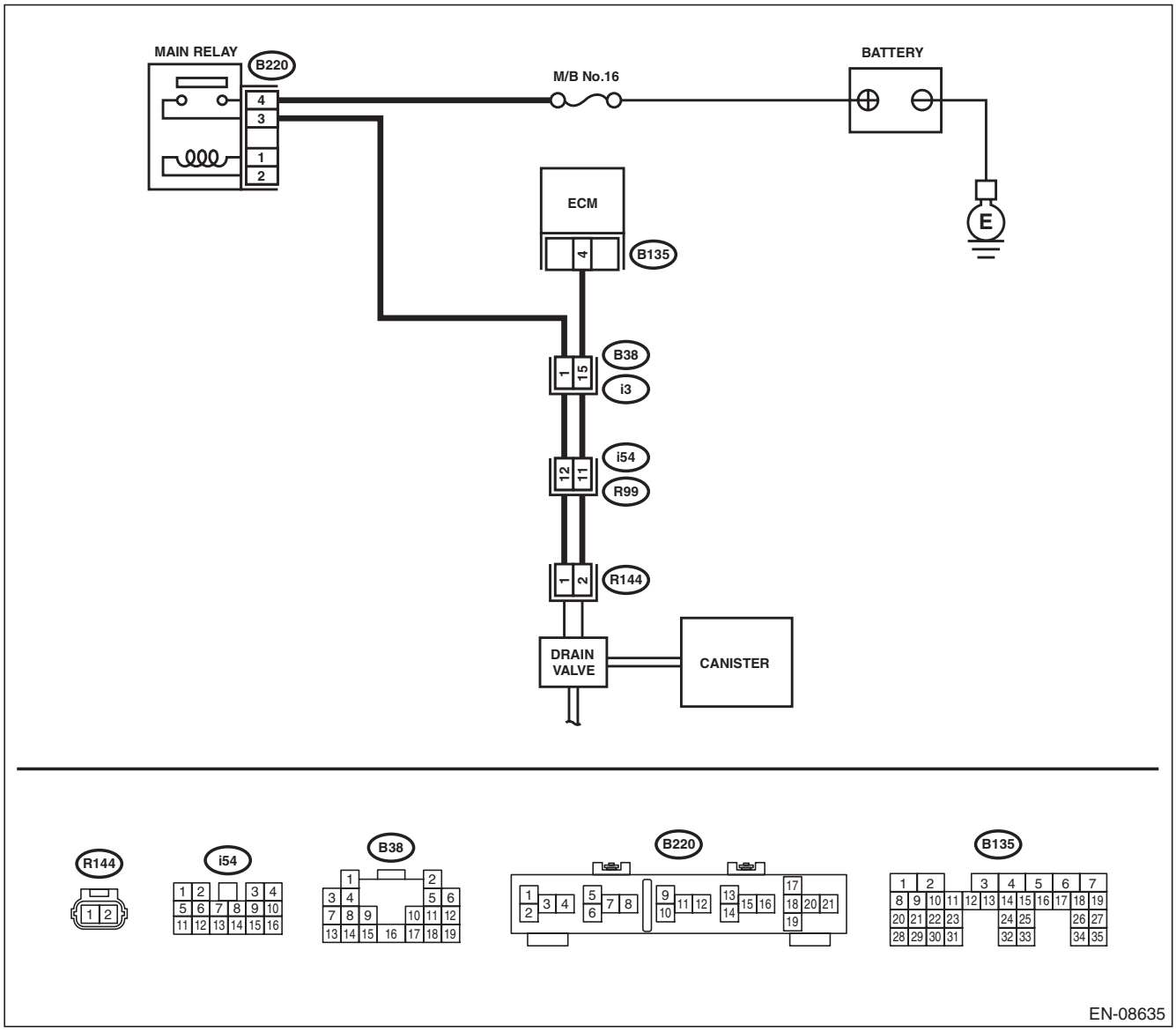

GETTHEMANUALS.org

Step		Check	Yes	No
1	**CHECK HARNESS BETWEEN ECM AND DRAIN VALVE.** 1) Turn the ignition switch to OFF. 2) Disconnect the connectors from the ECM and drain valve. 3) Turn the ignition switch to ON. 4) Measure the voltage between ECM and chassis ground. ***Connector & terminal*** ***(B135) No. 4 (+) — Chassis ground (–):***	Is the voltage 10 V or more?	Repair the short circuit to power in the harness between ECM and drain valve connector.	Go to step **2**.
2	**CHECK DRAIN VALVE.** 1) Turn the ignition switch to OFF. 2) Measure the resistance between drain valve terminals. ***Terminals*** ***No. 1 — No. 2:***	Is the resistance less than 1 Ω?	Replace the drain valve. <Ref. to EC(H6DO)-18, Drain Valve.>	Repair the poor contact of ECM connector.

GETthemMANUALS.org

DG:DTC P0451 EVAPORATIVE EMISSION CONTROL SYSTEM PRESSURE SENSOR

DTC DETECTING CONDITION:

- Detected when two consecutive driving cycles with fault occur.
- GENERAL DESCRIPTION <Ref. to GD(H6DO)-169, DTC P0451 EVAPORATIVE EMISSION CONTROL SYSTEM PRESSURE SENSOR, Diagnostic Trouble Code (DTC) Detecting Criteria.>

CAUTION:

After servicing or replacing faulty parts, perform Clear Memory Mode <Ref. to EN(H6DO)(diag)-57, OPERATION, Clear Memory Mode.>, and Inspection Mode <Ref. to EN(H6DO)(diag)-44, PROCEDURE, Inspection Mode.>.

	Step	Check	Yes	No
1	**CHECK FUEL FILLER CAP.** 1) Turn the ignition switch to OFF. 2) Open the fuel flap.	Is the fuel filler cap tightened securely?	Go to step **2**.	Tighten fuel filler cap securely.
2	**CHECK PRESSURE VACUUM LINE.** NOTE: Check the following items. • Disconnection, leakage and clogging of the vacuum hoses and pipes between fuel tank pressure sensor and fuel tank • Disconnection, leakage and clogging of air ventilation hoses and pipes between fuel filler pipe and fuel tank	Is there any fault in pressure/ vacuum line?	Repair or replace the hoses and pipes.	Replace the fuel tank pressure sensor. <Ref. to EC(H6DO)-15, Fuel Tank Pressure Sensor.>

GETTHEMANUALS.org

DH:DTC P0452 EVAPORATIVE EMISSION CONTROL SYSTEM PRESSURE SENSOR LOW INPUT

DTC DETECTING CONDITION:

- Immediately at fault recognition
- GENERAL DESCRIPTION <Ref. to GD(H6DO)-173, DTC P0452 EVAPORATIVE EMISSION CONTROL SYSTEM PRESSURE SENSOR LOW INPUT, Diagnostic Trouble Code (DTC) Detecting Criteria.>

CAUTION:

After servicing or replacing faulty parts, perform Clear Memory Mode <Ref. to EN(H6DO)(diag)-57, OPERATION, Clear Memory Mode.>, and Inspection Mode <Ref. to EN(H6DO)(diag)-44, PROCEDURE, Inspection Mode.>.

WIRING DIAGRAM:

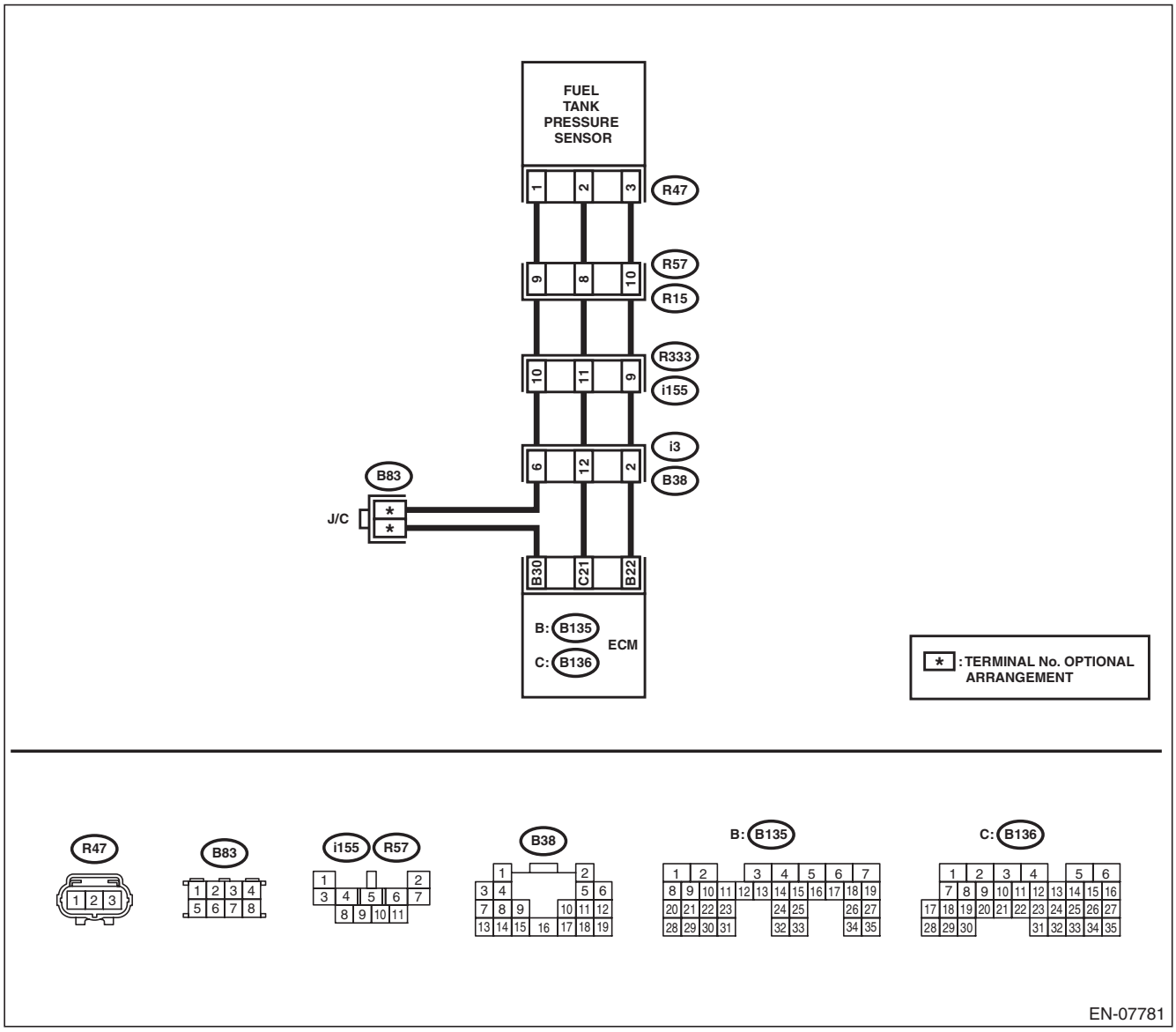

GETTHEMANUALS.org

	Step	Check	Yes	No
1	**CHECK CURRENT DATA.** 1) Turn the ignition switch to ON. 2) Using the Subaru Select Monitor or a general scan tool, read the value in «Fuel Tank Pressure». NOTE: • Subaru Select Monitor For detailed operation procedures, refer to "READ CURRENT DATA FOR ENGINE". <Ref. to EN(H6DO)(diag)-35, Subaru Select Monitor.> • General scan tool For detailed operation procedures, refer to the general scan tool operation manual.	Is the value in «Fuel Tank Pressure» less than –7.45 kPa (–55.85 mmHg, –2.2003 inHg)?	Go to step **2**.	Even if DTC is detected, the circuit has returned to a normal condition at this time. Reproduce the failure, and then perform the diagnosis again. NOTE: In this case, temporary poor contact of connector, temporary open or short circuit of harness may be the cause.
2	**CHECK FUEL TANK PRESSURE SENSOR POWER SUPPLY.** 1) Turn the ignition switch to OFF. 2) Disconnect the connector from the fuel tank pressure sensor. 3) Turn the ignition switch to ON. 4) Measure the voltage between the fuel tank pressure sensor connector and chassis ground. ***Connector & terminal*** ***(R47) No. 3 (+) — Chassis ground (–):***	Is the voltage 4.5 V or more?	Go to step **3**.	Repair the harness and connector. NOTE: In this case, repair the following item: • Open circuit of harness between ECM and fuel tank pressure sensor connector • Poor contact of ECM connector • Poor contact of coupling connector
3	**CHECK HARNESS BETWEEN ECM AND FUEL TANK PRESSURE SENSOR CONNECTOR.** 1) Turn the ignition switch to OFF. 2) Disconnect the connector from ECM. 3) Measure the resistance of harness between the ECM and fuel tank pressure sensor connector. ***Connector & terminal*** ***(B136) No. 21 — (R47) No. 2:***	Is the resistance less than 1 Ω?	Go to step **4**.	Repair the harness and connector. NOTE: In this case, repair the following item: • Open circuit of harness between ECM and fuel tank pressure sensor connector • Poor contact of coupling connector
4	**CHECK HARNESS BETWEEN ECM AND FUEL TANK PRESSURE SENSOR CONNECTOR.** Measure the resistance between ECM and chassis ground. ***Connector & terminal*** ***(B136) No. 21 — Chassis ground:***	Is the resistance 1 MΩ or more?	Go to step **5**.	Repair the ground short circuit of harness between ECM and fuel tank pressure sensor connector.
5	**CHECK FOR POOR CONTACT.** Check for poor contact between the ECM and fuel tank pressure sensor connector.	Is there poor contact of the ECM or fuel tank pressure sensor connector?	Repair the poor contact of the ECM or fuel tank pressure sensor connector.	Replace the fuel tank pressure sensor. <Ref. to EC(H6DO)-15, Fuel Tank Pressure Sensor.>

GETtheMANUALS.org

DI: DTC P0453 EVAPORATIVE EMISSION CONTROL SYSTEM PRESSURE SENSOR HIGH INPUT

DTC DETECTING CONDITION:

- Immediately at fault recognition
- GENERAL DESCRIPTION <Ref. to GD(H6DO)-175, DTC P0453 EVAPORATIVE EMISSION CONTROL SYSTEM PRESSURE SENSOR HIGH INPUT, Diagnostic Trouble Code (DTC) Detecting Criteria.>

CAUTION:

After servicing or replacing faulty parts, perform Clear Memory Mode <Ref. to EN(H6DO)(diag)-57, OPERATION, Clear Memory Mode.>, and Inspection Mode <Ref. to EN(H6DO)(diag)-44, PROCEDURE, Inspection Mode.>.

WIRING DIAGRAM:

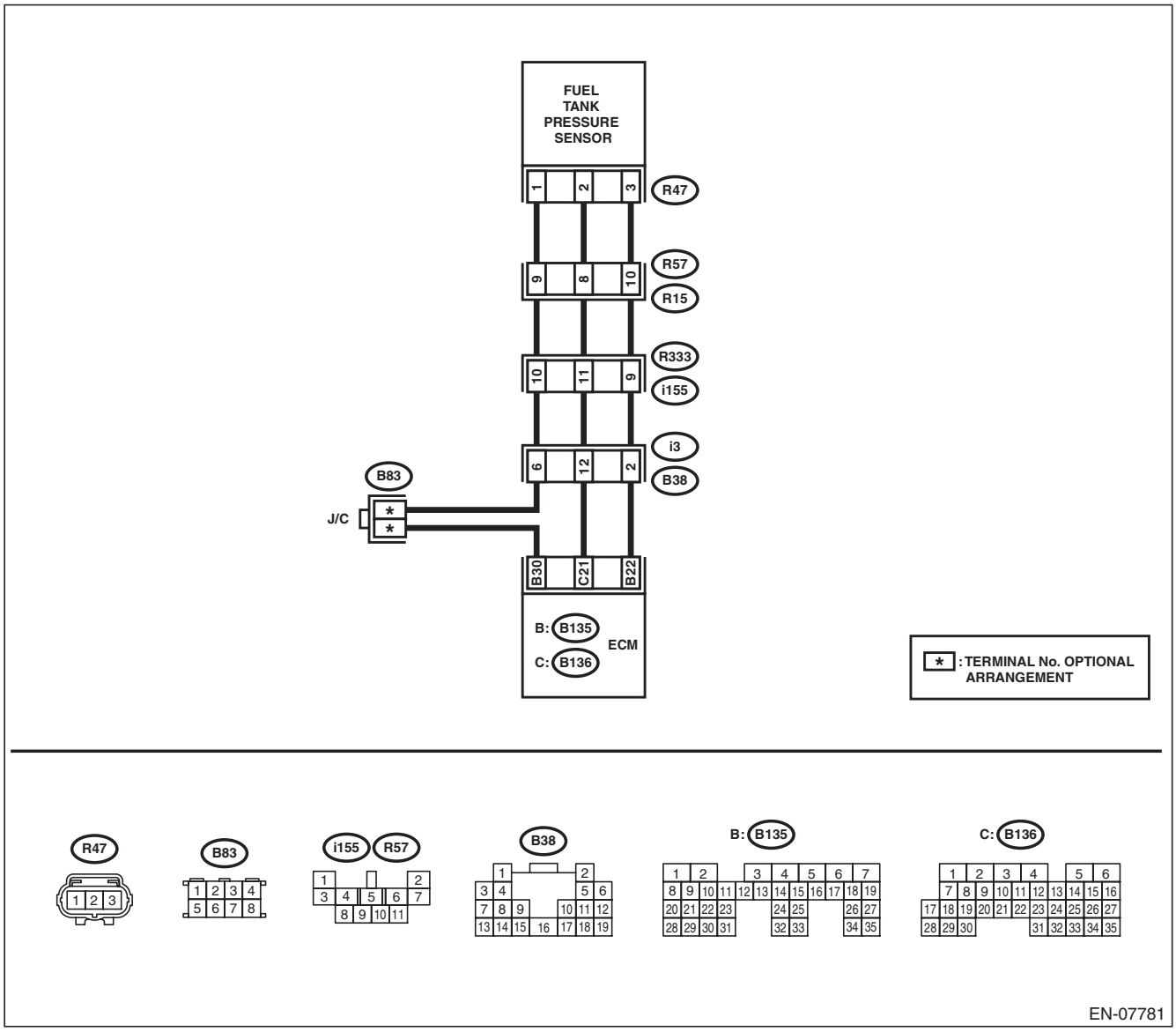

GETTHEMANUALS.org

	Step	Check	Yes	No
1	**CHECK CURRENT DATA.** 1) Turn the ignition switch to ON. 2) Using the Subaru Select Monitor or a general scan tool, read the value in «Fuel Tank Pressure». NOTE: • Subaru Select Monitor For detailed operation procedures, refer to "READ CURRENT DATA FOR ENGINE". <Ref. to EN(H6DO)(diag)-35, Subaru Select Monitor.> • General scan tool For detailed operation procedures, refer to the general scan tool operation manual.	Is the value in «Fuel Tank Pressure» 7.98 kPa (59.85 mmHg, 2.357 inHg) or more?	Go to step **2**.	Even if DTC is detected, the circuit has returned to a normal condition at this time. Reproduce the failure, and then perform the diagnosis again. NOTE: In this case, temporary poor contact of connector, temporary open or short circuit of harness may be the cause.
2	**CHECK HARNESS BETWEEN ECM AND FUEL TANK PRESSURE SENSOR CONNECTOR.** 1) Turn the ignition switch to OFF. 2) Disconnect the connector from the fuel tank pressure sensor. 3) Turn the ignition switch to ON. 4) Using the Subaru Select Monitor or a general scan tool, read the value in «Fuel Tank Pressure». NOTE: • Subaru Select Monitor For detailed operation procedures, refer to "READ CURRENT DATA FOR ENGINE". <Ref. to EN(H6DO)(diag)-35, Subaru Select Monitor.> • General scan tool For detailed operation procedures, refer to the general scan tool operation manual.	Is the value in «Fuel Tank Pressure» 7.98 kPa (59.85 mmHg, 2.357 inHg) or more?	Repair the short circuit to power in the harness between ECM and fuel tank pressure sensor connector.	Go to step **3**.
3	**CHECK HARNESS BETWEEN ECM AND FUEL TANK PRESSURE SENSOR CONNECTOR.** 1) Turn the ignition switch to OFF. 2) Measure the resistance of harness between fuel tank pressure sensor connector and engine ground. ***Connector & terminal*** ***(R47) No. 1 — Engine ground:***	Is the resistance less than 5 Ω?	Go to step **4**.	Repair the harness and connector. NOTE: In this case, repair the following item: • Open circuit of harness between ECM and fuel tank pressure sensor connector • Poor contact of ECM connector • Poor contact of coupling connector
4	**CHECK FOR POOR CONTACT.** Check for poor contact of the fuel tank pressure sensor connector.	Is there poor contact of fuel tank pressure sensor connector?	Repair the poor contact of fuel tank pressure sensor connector.	Replace the fuel tank pressure sensor. <Ref. to EC(H6DO)-15, Fuel Tank Pressure Sensor.>

GETthemMANUALS.org

DJ:DTC P0456 EVAPORATIVE EMISSION CONTROL SYSTEM LEAK DETECTED (VERY SMALL LEAK)

DTC DETECTING CONDITION:

- Detected when two consecutive driving cycles with fault occur.
- GENERAL DESCRIPTION <Ref. to GD(H6DO)-177, DTC P0456 EVAPORATIVE EMISSION CONTROL SYSTEM LEAK DETECTED (VERY SMALL LEAK), Diagnostic Trouble Code (DTC) Detecting Criteria.>

TROUBLE SYMPTOM:

- Fuel odor
- There is a hole of more than 0.5 mm (0.020 in) dia. in evaporation system or fuel tank.

CAUTION:

After servicing or replacing faulty parts, perform Clear Memory Mode <Ref. to EN(H6DO)(diag)-57, OPERATION, Clear Memory Mode.>, and Inspection Mode <Ref. to EN(H6DO)(diag)-44, PROCEDURE, Inspection Mode.>.

	Step	Check	Yes	No
1	**CHECK FUEL FILLER CAP.** 1) Turn the ignition switch to OFF. 2) Check the fuel filler cap. NOTE: The DTC is stored in memory if fuel filler cap is or was loose or if the cap chain has caught while tightening.	Is the fuel filler cap tightened securely?	Go to step **2**.	Tighten fuel filler cap securely.
2	**CHECK FUEL FILLER CAP.**	Is the fuel filler cap genuine?	Go to step **3**.	Replace with a genuine fuel filler cap.
3	**CHECK FUEL FILLER PIPE GASKET.**	Is there any damage to the seal between fuel filler cap and fuel filler pipe?	Repair or replace the fuel filler cap and fuel filler pipe. <Ref. to FU(H6DO)-68, Fuel Filler Pipe.>	Go to step **4**.
4	**CHECK DRAIN VALVE.** 1) Install the delivery (test) mode fuse. **CAUTION:** **Do not use any fuses that are installed on the vehicle.** 2) Turn the ignition switch to ON. 3) Operate the drain valve using the Subaru Select Monitor. NOTE: Drain valve can be operated using the Subaru Select Monitor. For detailed procedures, refer to “SYSTEM OPERATION CHECK MODE”. <Ref. to EN(H6DO)(diag)-58, System Operation Check Mode.>	Does the drain valve operate?	Go to step **5**.	Replace the drain valve. <Ref. to EC(H6DO)-18, Drain Valve.>
5	**CHECK PURGE CONTROL SOLENOID VALVE.** Operate the purge control solenoid valve using the Subaru Select Monitor. NOTE: Purge control solenoid valve operation can be executed using Subaru Select Monitor. For detailed procedures, refer to “SYSTEM OPERATION CHECK MODE”. <Ref. to EN(H6DO)(diag)-58, System Operation Check Mode.>	Does the purge control solenoid valve operate?	Go to step **6**.	Replace the purge control solenoid valve. <Ref. to EC(H6DO)-10, Purge Control Solenoid Valve.>

GETtheMANUALS.org

Step		Check	Yes	No
6	**CHECK EVAPORATIVE EMISSION CONTROL SYSTEM LINE.** 1) Turn the ignition switch to OFF. 2) Remove the delivery (test) mode fuse.	Is there any hole of more than 0.5 mm (0.020 in) dia. on evaporation line?	Repair or replace the evaporation line. <Ref. to FU(H6DO)-80, Fuel Delivery and Evaporation Lines.>	Go to step **7**.
7	**CHECK CANISTER.**	Is the canister damaged or is there a hole of more than 0.5 mm (0.020 in) dia. in it?	Repair or replace the canister. <Ref. to EC(H6DO)-6, Canister.>	Go to step **8**.
8	**CHECK FUEL TANK.** Remove the fuel tank. <Ref. to FU(H6DO)-61, Fuel Tank.>	Is the fuel tank damaged or is there any hole of more than 0.5 mm (0.020 in) dia. in it?	Repair or replace the fuel tank. <Ref. to FU(H6DO)-61, Fuel Tank.>	Go to step **9**.
9	**CHECK ANY OTHER MECHANICAL TROUBLE IN EVAPORATIVE EMISSION CONTROL SYSTEM.**	Is there any hole of more than 0.5 mm (0.020 in) dia., crack, clogging, or disconnection, bend, misconnection of hoses or pipes in evaporative emission control system?	Repair or replace the hoses or pipes.	Repair the poor contact of ECM connector.

GETTHEMANUALS.org

DK:DTC P0457 EVAPORATIVE EMISSION CONTROL SYSTEM LEAK DETECTED (FUEL CAP LOOSE/OFF)

DTC DETECTING CONDITION:

- Detected when two consecutive driving cycles with fault occur.
- GENERAL DESCRIPTION <Ref. to GD(H6DO)-177, DTC P0457 EVAPORATIVE EMISSION CONTROL SYSTEM LEAK DETECTED (FUEL CAP LOOSE/OFF), Diagnostic Trouble Code (DTC) Detecting Criteria.>

TROUBLE SYMPTOM:

- Fuel odor
- Fuel filler cap loose or lost

CAUTION:

After servicing or replacing faulty parts, perform Clear Memory Mode <Ref. to EN(H6DO)(diag)-57, OPERATION, Clear Memory Mode.>, and Inspection Mode <Ref. to EN(H6DO)(diag)-44, PROCEDURE, Inspection Mode.>.

	Step	Check	Yes	No
1	**CHECK FUEL FILLER CAP.** 1) Turn the ignition switch to OFF. 2) Check the fuel filler cap. NOTE: The DTC is stored in memory if fuel filler cap is or was loose or if the cap chain has caught while tightening.	Is the fuel filler cap tightened securely?	Go to step **2**.	Tighten fuel filler cap securely.
2	**CHECK FUEL FILLER CAP.**	Is the fuel filler cap genuine?	Go to step **3**.	Replace with a genuine fuel filler cap.
3	**CHECK FUEL FILLER PIPE GASKET.**	Is there any damage to the seal between fuel filler cap and fuel filler pipe?	Repair or replace the fuel filler cap and fuel filler pipe. <Ref. to FU(H6DO)-68, Fuel Filler Pipe.>	Go to step **4**.
4	**CHECK DRAIN VALVE.** 1) Install the delivery (test) mode fuse. **CAUTION:** **Do not use any fuses that are installed on the vehicle.** 2) Turn the ignition switch to ON. 3) Operate the drain valve using the Subaru Select Monitor. NOTE: Drain valve can be operated using the Subaru Select Monitor. For detailed procedures, refer to “SYSTEM OPERATION CHECK MODE”. <Ref. to EN(H6DO)(diag)-58, System Operation Check Mode.>	Does the drain valve operate?	Go to step **5**.	Replace the drain valve. <Ref. to EC(H6DO)-18, Drain Valve.>
5	**CHECK PURGE CONTROL SOLENOID VALVE.** Operate the purge control solenoid valve using the Subaru Select Monitor. NOTE: Purge control solenoid valve operation can be executed using Subaru Select Monitor. For detailed procedures, refer to “SYSTEM OPERATION CHECK MODE”. <Ref. to EN(H6DO)(diag)-58, System Operation Check Mode.>	Does the purge control solenoid valve operate?	Go to step **6**.	Replace the purge control solenoid valve. <Ref. to EC(H6DO)-10, Purge Control Solenoid Valve.>

GETtheMANUALS.org

Step		Check	Yes	No
6	**CHECK EVAPORATIVE EMISSION CONTROL SYSTEM LINE.** 1) Turn the ignition switch to OFF. 2) Remove the delivery (test) mode fuse.	Is there any disconnection, damage or clogging on the evaporation line?	Repair or replace the evaporation line. <Ref. to FU(H6DO)-80, Fuel Delivery and Evaporation Lines.>	Go to step **7**.
7	**CHECK CANISTER.**	Is the canister damaged?	Repair or replace the canister. <Ref. to EC(H6DO)-6, Canister.>	Go to step **8**.
8	**CHECK FUEL TANK.** Remove the fuel tank. <Ref. to FU(H6DO)-61, Fuel Tank.>	Is the fuel tank damaged?	Repair or replace the fuel tank. <Ref. to FU(H6DO)-61, Fuel Tank.>	Go to step **9**.
9	**CHECK ANY OTHER MECHANICAL TROUBLE IN EVAPORATIVE EMISSION CONTROL SYSTEM.**	Are there holes, cracks, clogging, or disconnection, misconnection of hoses or pipes in evaporative emission control system?	Repair or replace the hoses or pipes.	Repair the poor contact of ECM connector.

GETthemMANUALS.org

DL:DTC P0458 EVAPORATIVE EMISSION SYSTEM PURGE CONTROL VALVE CIRCUIT LOW

DTC DETECTING CONDITION:

- Detected when two consecutive driving cycles with fault occur.
- GENERAL DESCRIPTION <Ref. to GD(H6DO)-178, DTC P0458 EVAPORATIVE EMISSION SYSTEM PURGE CONTROL VALVE CIRCUIT LOW, Diagnostic Trouble Code (DTC) Detecting Criteria.>

TROUBLE SYMPTOM:

Improper idling

CAUTION:

After servicing or replacing faulty parts, perform Clear Memory Mode <Ref. to EN(H6DO)(diag)-57, OPERATION, Clear Memory Mode.>, and Inspection Mode <Ref. to EN(H6DO)(diag)-44, PROCEDURE, Inspection Mode.>.

WIRING DIAGRAM:

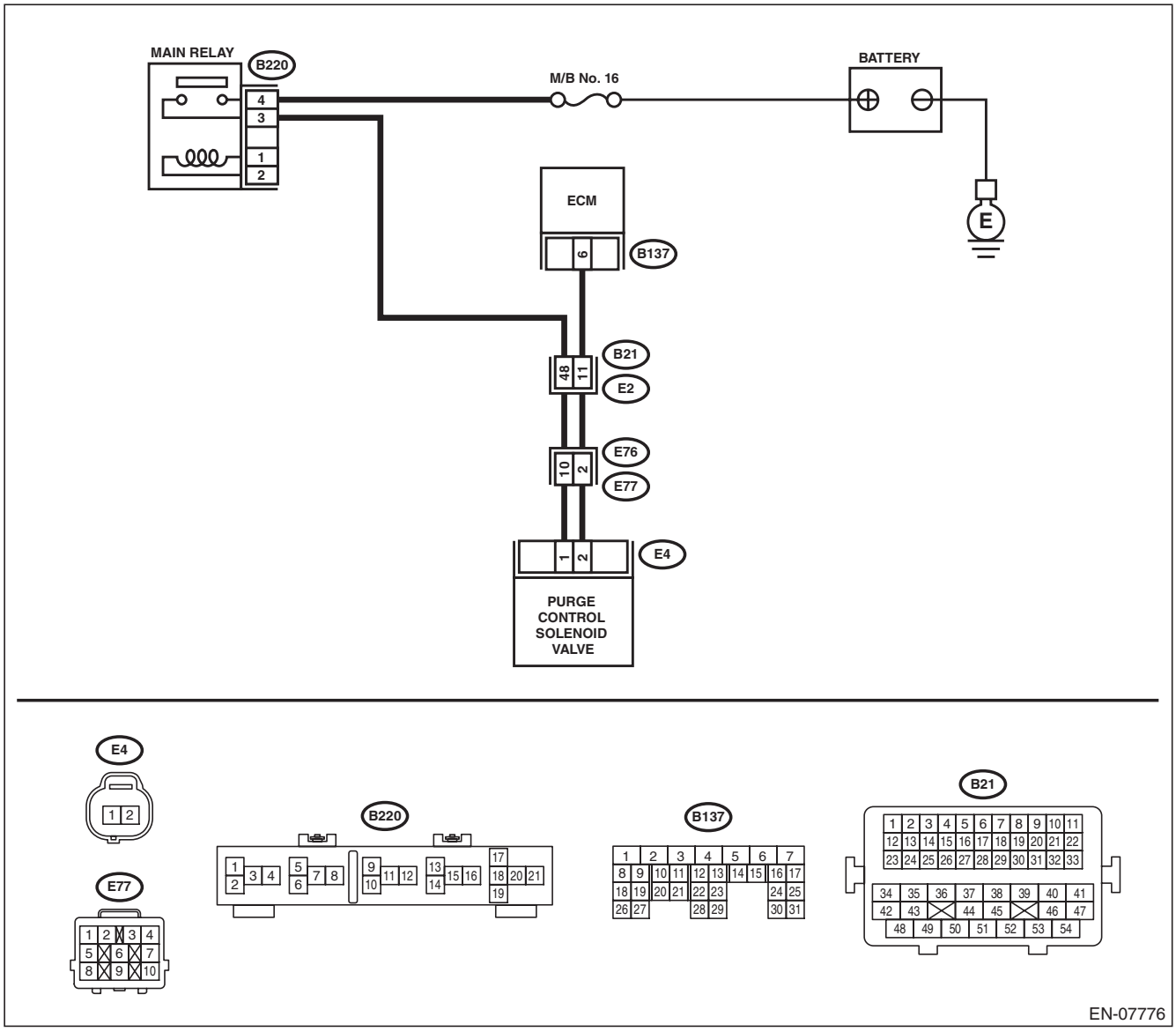

GETTHEMANUALS.org

	Step	Check	Yes	No
1	**CHECK OUTPUT SIGNAL OF ECM.** 1) Turn the ignition switch to ON. 2) Measure the voltage between ECM and chassis ground. ***Connector & terminal*** ***(B137) No. 6 (+) — Chassis ground (–):***	Is the voltage 10 V or more?	Go to step **2**.	Go to step **3**.
2	**CHECK FOR POOR CONTACT.** Check for poor contact of ECM connector.	Is there poor contact of ECM connector?	Repair the poor contact of ECM connector.	Even if DTC is detected, the circuit has returned to a normal condition at this time. Reproduce the failure, and then perform the diagnosis again. NOTE: In this case, temporary open or short circuit of harness or temporary poor contact of connector may be the cause.
3	**CHECK POWER SUPPLY TO PURGE CONTROL SOLENOID VALVE.** Measure the voltage between purge control solenoid valve and engine ground. ***Connector & terminal*** ***(E4) No. 1 (+) — Engine ground (–):***	Is the voltage 10 V or more?	Go to step **4**.	Repair the power supply circuit.
4	**CHECK HARNESS BETWEEN ECM AND PURGE CONTROL SOLENOID VALVE CONNECTOR.** 1) Turn the ignition switch to OFF. 2) Disconnect the connectors from ECM and purge control solenoid valve. 3) Measure the resistance between the purge control solenoid valve connector and engine ground. ***Connector & terminal*** ***(E4) No. 2 — Engine ground:***	Is the resistance 1 MΩ or more?	Go to step **5**.	Repair the ground short circuit of harness between ECM and purge control solenoid valve connector.
5	**CHECK HARNESS BETWEEN ECM AND PURGE CONTROL SOLENOID VALVE CONNECTOR.** Measure the resistance of harness between ECM and purge control solenoid valve. ***Connector & terminal*** ***(B137) No. 6 — (E4) No. 2:***	Is the resistance less than 1 Ω?	Go to step **6**.	Repair the harness and connector. NOTE: In this case, repair the following item: • Open circuit in harness between ECM and purge control solenoid valve connector • Poor contact of coupling connector
6	**CHECK PURGE CONTROL SOLENOID VALVE.** 1) Remove the purge control solenoid valve. 2) Measure the resistance between purge control solenoid valve terminals. ***Terminals*** ***No. 1 — No. 2:***	Is the resistance 10 — 100 Ω?	Repair the poor contact of purge control solenoid valve connector.	Replace the purge control solenoid valve. <Ref. to EC(H6DO)-10, Purge Control Solenoid Valve.>

GETTHEMANUALS.org

DM:DTC P0459 EVAPORATIVE EMISSION SYSTEM PURGE CONTROL VALVE CIRCUIT HIGH

DTC DETECTING CONDITION:

- Detected when two consecutive driving cycles with fault occur.
- GENERAL DESCRIPTION <Ref. to GD(H6DO)-180, DTC P0459 EVAPORATIVE EMISSION SYSTEM PURGE CONTROL VALVE CIRCUIT HIGH, Diagnostic Trouble Code (DTC) Detecting Criteria.>

TROUBLE SYMPTOM:

Improper idling

CAUTION:

After servicing or replacing faulty parts, perform Clear Memory Mode <Ref. to EN(H6DO)(diag)-57, OPERATION, Clear Memory Mode.>, and Inspection Mode <Ref. to EN(H6DO)(diag)-44, PROCEDURE, Inspection Mode.>.

WIRING DIAGRAM:

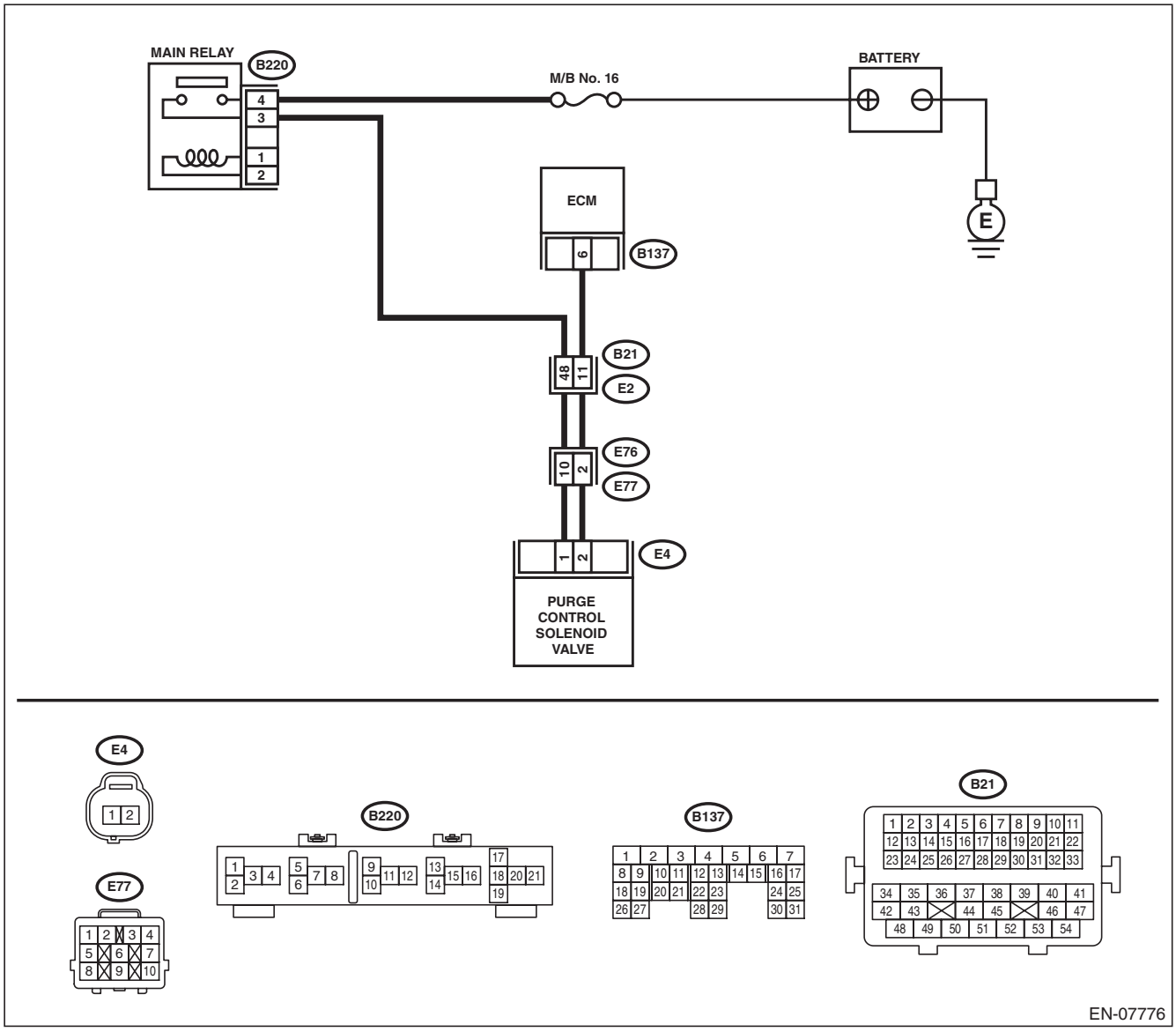

GETTHEMANUALS.org

Step		Check	Yes	No
1	**CHECK HARNESS BETWEEN ECM AND PURGE CONTROL SOLENOID VALVE.** 1) Turn the ignition switch to OFF. 2) Disconnect the connectors from ECM and purge control solenoid valve. 3) Turn the ignition switch to ON. 4) Measure the voltage between ECM and chassis ground. ***Connector & terminal*** ***(B137) No. 6 (+) — Chassis ground (–):***	Is the voltage 10 V or more?	Repair the short circuit to power in the harness between ECM and purge control solenoid valve connector.	Go to step **2**.
2	**CHECK PURGE CONTROL SOLENOID VALVE.** 1) Turn the ignition switch to OFF. 2) Measure the resistance between purge control solenoid valve terminals. ***Terminals*** ***No. 1 — No. 2:***	Is the resistance less than 1 Ω?	Replace the purge control solenoid valve. <Ref. to EC(H6DO)-10, Purge Control Solenoid Valve.>	Repair the poor contact of ECM connector.

GETthemMANUALS.org

DN:DTC P0461 FUEL LEVEL SENSOR “A” CIRCUIT RANGE/PERFORMANCE

DTC DETECTING CONDITION:

- Detected when two consecutive driving cycles with fault occur.
- GENERAL DESCRIPTION <Ref. to GD(H6DO)-182, DTC P0461 FUEL LEVEL SENSOR “A” CIRCUIT RANGE/PERFORMANCE, Diagnostic Trouble Code (DTC) Detecting Criteria.>

CAUTION:

After servicing or replacing faulty parts, perform Clear Memory Mode <Ref. to EN(H6DO)(diag)-57, OPERATION, Clear Memory Mode.>, and Inspection Mode <Ref. to EN(H6DO)(diag)-44, PROCEDURE, Inspection Mode.>.

Step	Check	Yes	No
1 CHECK FOR ANY OTHER DTC ON DISPLAY.	Is any other DTC displayed?	Check the appropriate DTC using the “List of Diagnostic Trouble Code (DTC)”. <Ref. to EN(H6DO)(diag)-85, List of Diagnostic Trouble Code (DTC).>	Replace the fuel level sensor and fuel sub level sensor. <Ref. to FU(H6DO)-73, Fuel Level Sensor.> <Ref. to FU(H6DO)-75, Fuel Sub Level Sensor.>

DO:DTC P0462 FUEL LEVEL SENSOR “A” CIRCUIT LOW

NOTE:
For the diagnostic procedure, refer to DTC P0463. <Ref. to EN(H6DO)(diag)-257, DTC P0463 FUEL LEVEL SENSOR “A” CIRCUIT HIGH, Diagnostic Procedure with Diagnostic Trouble Code (DTC).>

GETTHEMANUALS.org

DP:DTC P0463 FUEL LEVEL SENSOR “A” CIRCUIT HIGH

DTC DETECTING CONDITION:

- Detected when two consecutive driving cycles with fault occur.
- GENERAL DESCRIPTION <Ref. to GD(H6DO)-186, DTC P0463 FUEL LEVEL SENSOR “A” CIRCUIT HIGH, Diagnostic Trouble Code (DTC) Detecting Criteria.>

CAUTION:

After servicing or replacing faulty parts, perform Clear Memory Mode <Ref. to EN(H6DO)(diag)-57, OPERATION, Clear Memory Mode.>, and Inspection Mode <Ref. to EN(H6DO)(diag)-44, PROCEDURE, Inspection Mode.>.

Step	Check	Yes	No
1 **CHECK FOR ANY OTHER DTC ON DISPLAY.**	Is DTC P0462 or P0463 displayed on the Subaru Select Monitor?	Check the combination meter. <Ref. to IDI-11, INSPECTION, Combination Meter System.>	Even if DTC is detected, the circuit has returned to a normal condition at this time. Reproduce the failure, and then perform the diagnosis again. NOTE: In this case, temporary poor contact of connector, temporary open or short circuit of harness may be the cause.

GETthemMANUALS.org

DQ:DTC P0464 FUEL LEVEL SENSOR CIRCUIT INTERMITTENT

DTC DETECTING CONDITION:

- Detected when two consecutive driving cycles with fault occur.
- GENERAL DESCRIPTION <Ref. to GD(H6DO)-188, DTC P0464 FUEL LEVEL SENSOR CIRCUIT INTERMITTENT, Diagnostic Trouble Code (DTC) Detecting Criteria.>

CAUTION:

After servicing or replacing faulty parts, perform Clear Memory Mode <Ref. to EN(H6DO)(diag)-57, OPERATION, Clear Memory Mode.>, and Inspection Mode <Ref. to EN(H6DO)(diag)-44, PROCEDURE, Inspection Mode.>.

Step	Check	Yes	No
1 **CHECK FOR ANY OTHER DTC ON DISPLAY.**	Is DTC P0464 displayed on the display?	Check the combination meter. <Ref. to IDI-11, INSPECTION, Combination Meter System.>	Even if DTC is detected, the circuit has returned to a normal condition at this time. Reproduce the failure, and then perform the diagnosis again. NOTE: In this case, temporary poor contact of connector, temporary open or short circuit of harness may be the cause.

GETthemMANUALS.org

DR:DTC P0500 VEHICLE SPEED SENSOR “A”

DTC DETECTING CONDITION:

- Immediately at fault recognition
- GENERAL DESCRIPTION <Ref. to GD(H6DO)-191, DTC P0500 VEHICLE SPEED SENSOR “A”, Diagnostic Trouble Code (DTC) Detecting Criteria.>

CAUTION:

After servicing or replacing faulty parts, perform Clear Memory Mode <Ref. to EN(H6DO)(diag)-57, OPERATION, Clear Memory Mode.>, and Inspection Mode <Ref. to EN(H6DO)(diag)-44, PROCEDURE, Inspection Mode.>.

Step		Check	Yes	No
1	**CHECK DTC OF VDC.** Check DTC of VDC.	Is DTC of VDC displayed?	Perform the diagnosis according to DTC. <Ref. to VDC(diag)-35, List of Diagnostic Trouble Code (DTC).>	Repair the poor contact of ECM connector.

GETTHEMANUALS.org

DS:DTC P0506 IDLE AIR CONTROL SYSTEM RPM LOWER THAN EXPECTED

DTC DETECTING CONDITION:

- Detected when two consecutive driving cycles with fault occur.
- GENERAL DESCRIPTION <Ref. to GD(H6DO)-192, DTC P0506 IDLE AIR CONTROL SYSTEM RPM LOWER THAN EXPECTED, Diagnostic Trouble Code (DTC) Detecting Criteria.>

TROUBLE SYMPTOM:

- Hard to start the engine.
- Engine does not start.
- Improper idling
- Engine stalls.

CAUTION:

After servicing or replacing faulty parts, perform Clear Memory Mode <Ref. to EN(H6DO)(diag)-57, OPERATION, Clear Memory Mode.>, and Inspection Mode <Ref. to EN(H6DO)(diag)-44, PROCEDURE, Inspection Mode.>.

Step		Check	Yes	No
1	**CHECK FOR ANY OTHER DTC ON DISPLAY.**	Is any other DTC displayed?	Check the appropriate DTC using the “List of Diagnostic Trouble Code (DTC)”. <Ref. to EN(H6DO)(diag)-85, List of Diagnostic Trouble Code (DTC).>	Go to step **2**.
2	**CHECK AIR CLEANER ELEMENT.** 1) Turn the ignition switch to OFF. 2) Check the air cleaner element.	Is there excessive clogging on air cleaner element?	Replace the air cleaner element. <Ref. to IN(H6DO)-4, Air Cleaner Element.>	Go to step **3**.
3	**CHECK ELECTRONIC THROTTLE CONTROL.** 1) Remove the electronic throttle control. 2) Check the electronic throttle control.	Are foreign matter found inside electronic throttle control?	Remove foreign matter from electronic throttle control.	Perform the diagnosis of DTC P2101. <Ref. to EN(H6DO)(diag)-336, DTC P2101 THROTTLE ACTUATOR CONTROL MOTOR CIRCUIT RANGE/PERFORMANCE, Diagnostic Procedure with Diagnostic Trouble Code (DTC).>

GETTHEMANUALS.org

DT:DTC P0507 IDLE AIR CONTROL SYSTEM RPM HIGHER THAN EXPECTED

DTC DETECTING CONDITION:

- Detected when two consecutive driving cycles with fault occur.
- GENERAL DESCRIPTION <Ref. to GD(H6DO)-193, DTC P0507 IDLE AIR CONTROL SYSTEM RPM HIGHER THAN EXPECTED, Diagnostic Trouble Code (DTC) Detecting Criteria.>

TROUBLE SYMPTOM:

Engine keeps running at higher speed than specified idle speed.

CAUTION:

After servicing or replacing faulty parts, perform Clear Memory Mode <Ref. to EN(H6DO)(diag)-57, OPERATION, Clear Memory Mode.>, and Inspection Mode <Ref. to EN(H6DO)(diag)-44, PROCEDURE, Inspection Mode.>.

Step		Check	Yes	No
1	**CHECK FOR ANY OTHER DTC ON DISPLAY.**	Is any other DTC displayed?	Check the appropriate DTC using the “List of Diagnostic Trouble Code (DTC)”. <Ref. to EN(H6DO)(diag)-85, List of Diagnostic Trouble Code (DTC).>	Go to step **2**.
2	**CHECK AIR INTAKE SYSTEM.** 1) Start and idle the engine. 2) Check the following items. • Loose installation of intake manifold and throttle body • Cracks of intake manifold gasket and throttle body gasket • Disconnection of vacuum hoses	Is there any fault in air intake system?	Repair air suction and leaks.	Go to step **3**.
3	**CHECK ELECTRONIC THROTTLE CONTROL.** 1) Turn the ignition switch to OFF. 2) Remove the electronic throttle control. 3) Check the electronic throttle control.	Are foreign matter found inside electronic throttle control?	Remove foreign matter from electronic throttle control.	Perform the diagnosis of DTC P2101. <Ref. to EN(H6DO)(diag)-336, DTC P2101 THROTTLE ACTUATOR CONTROL MOTOR CIRCUIT RANGE/PERFORMANCE, Diagnostic Procedure with Diagnostic Trouble Code (DTC).>

GETtheMANUALS.org

DU:DTC P050A COLD START IDLE AIR CONTROL SYSTEM PERFORMANCE

DTC DETECTING CONDITION:

- Detected when two consecutive driving cycles with fault occur.
- GENERAL DESCRIPTION <Ref. to GD(H6DO)-194, DTC P050A COLD START IDLE AIR CONTROL SYSTEM PERFORMANCE, Diagnostic Trouble Code (DTC) Detecting Criteria.>

TROUBLE SYMPTOM:

- Engine keeps running at higher speed than specified idle speed.
- Engine keeps running at a lower speed than the specified idle speed.
- Engine stalls.

CAUTION:

After servicing or replacing faulty parts, perform Clear Memory Mode <Ref. to EN(H6DO)(diag)-57, OPERATION, Clear Memory Mode.>, and Inspection Mode <Ref. to EN(H6DO)(diag)-44, PROCEDURE, Inspection Mode.>.

WIRING DIAGRAM:

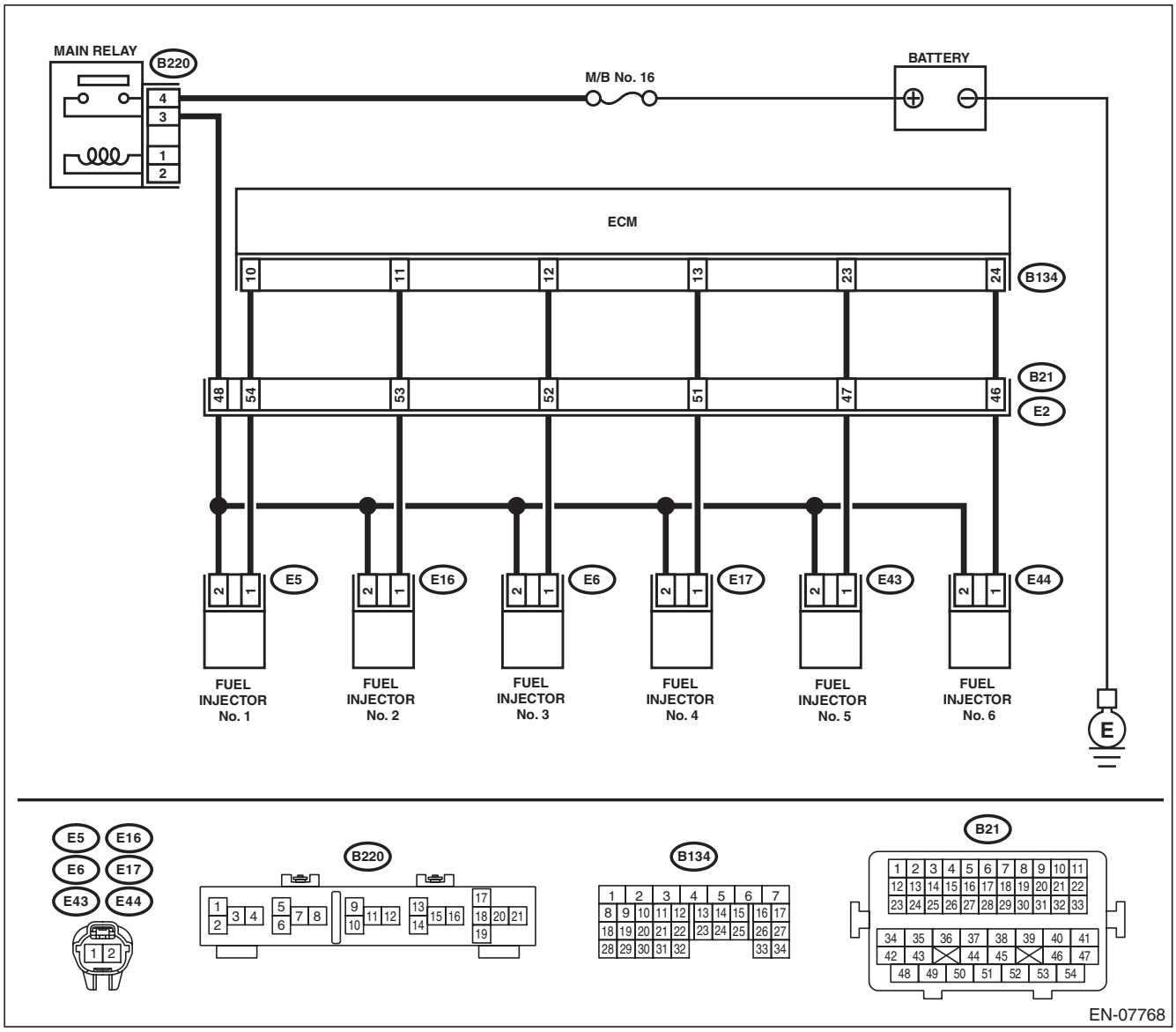

GET them MANUALS.org

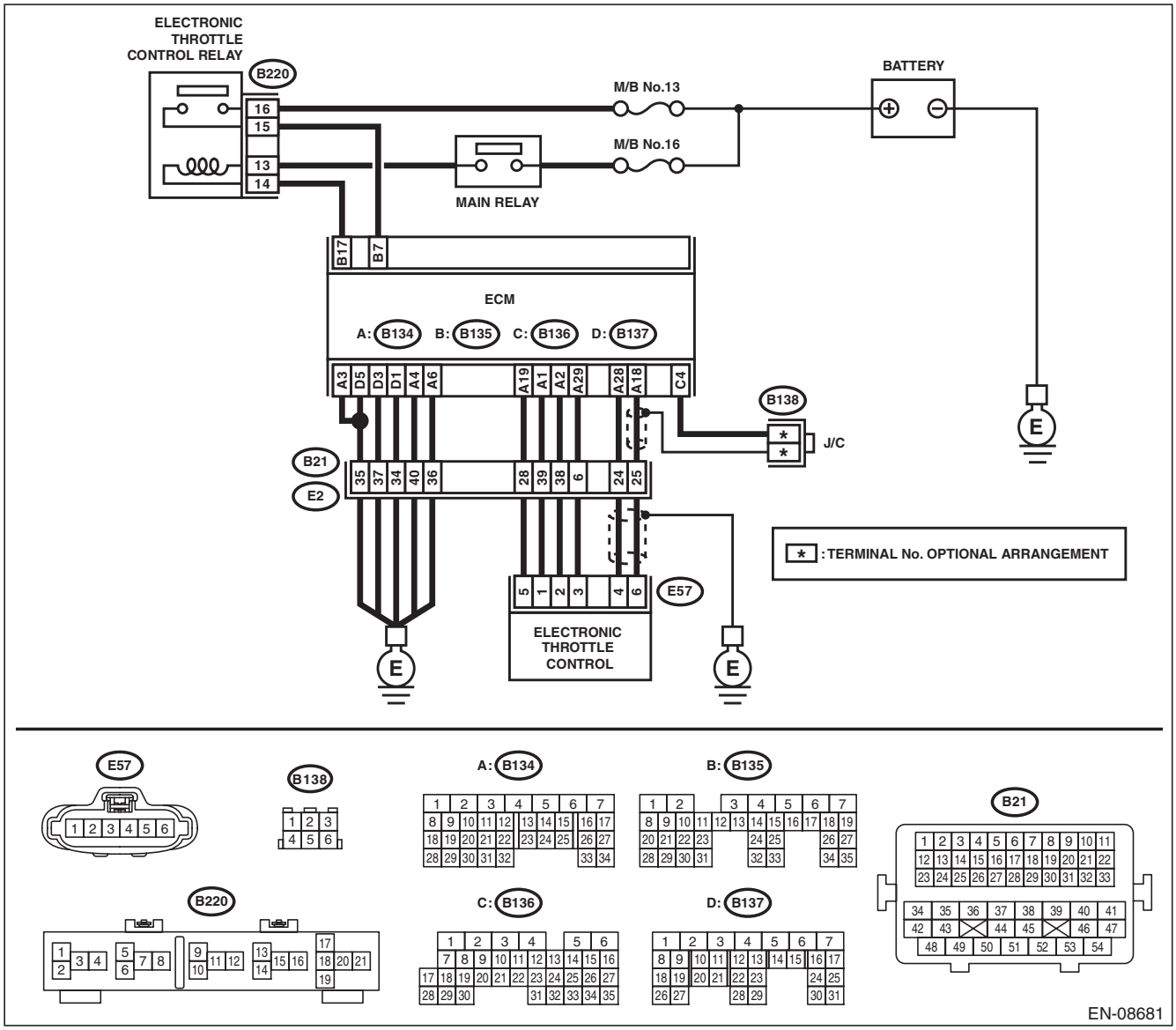

Step		Check	Yes	No
1	**CHECK FOR ANY OTHER DTC ON DISPLAY.**	Is any other DTC displayed?	Check the appropriate DTC using the “List of Diagnostic Trouble Code (DTC)”. <Ref. to EN(H6DO)(diag)-85, List of Diagnostic Trouble Code (DTC).>	Go to step **2**.
2	**CHECK ENGINE OIL.**	Is there a proper amount of engine oil?	Go to step **3**.	Replace engine oil. <Ref. to LU(H6DO)-9, REPLACEMENT, Engine Oil.>
3	**CHECK EXHAUST SYSTEM.**	Are there holes or loose bolts on exhaust system?	Repair the exhaust system.	Go to step **4**.

GETTHEMANUALS.org

Step		Check	Yes	No
4	**CHECK AIR INTAKE SYSTEM.**	Are there holes, loose bolts or disconnection of hose on air intake system?	Repair the air intake system.	Go to step **5**.
5	**CHECK FUEL PRESSURE.** **WARNING:** **Place "NO OPEN FLAMES" signs near the working area.** **CAUTION:** **Be careful not to spill fuel.** Measure the fuel pressure. <Ref. to ME(H6DO)-31, INSPECTION, Fuel Pressure.> **CAUTION:** **Release fuel pressure before removing the fuel pressure gauge.**	Is the measured value 340 — 400 kPa (3.5 — 4.1 kgf/cm^2, 49 — 58 psi)?	Go to step **6**.	Repair the following item. Fuel pressure is too high: • Clogged fuel line or bent hose Fuel pressure is too low: • Improper fuel pump discharge • Clogged fuel line
6	**CHECK ENGINE COOLANT TEMPERATURE SENSOR.** 1) Start the engine and warm up completely. 2) Read the value of «Coolant Temp.» using the Subaru Select Monitor or a general scan tool. NOTE: • Subaru Select Monitor For detailed operation procedures, refer to "READ CURRENT DATA FOR ENGINE". <Ref. to EN(H6DO)(diag)-35, Subaru Select Monitor.> • General scan tool For detailed operation procedures, refer to the general scan tool operation manual.	Is the value of «Coolant Temp.» 75°C (167°F) or more?	Go to step **7**.	Replace the engine coolant temperature sensor. <Ref. to FU(H6DO)-29, Engine Coolant Temperature Sensor.>
7	**CHECK MASS AIR FLOW AND INTAKE AIR TEMPERATURE SENSOR.** 1) Start the engine and warm up engine until coolant temperature is higher than 75°C (167°F). 2) Place the select lever in "P" range or "N" range. 3) Turn the A/C switch to OFF. 4) Turn all the accessory switches to OFF. 5) Read the value of «Mass Air Flow» using the Subaru Select Monitor or a general scan tool. NOTE: • Subaru Select Monitor For detailed operation procedures, refer to "READ CURRENT DATA FOR ENGINE". <Ref. to EN(H6DO)(diag)-35, Subaru Select Monitor.> • General scan tool For detailed operation procedures, refer to the general scan tool operation manual.	Is the value of «Mass Air Flow» 2.0 — 5.0 g/s (0.26 — 0.66 lb/m)?	Go to step **8**.	Replace the mass air flow and intake air temperature sensor. <Ref. to FU(H6DO)-41, Mass Air Flow and Intake Air Temperature Sensor.>

GETTHEMANUALS.org

	Step	Check	Yes	No
8	**CHECK MASS AIR FLOW AND INTAKE AIR TEMPERATURE SENSOR.** 1) Start the engine and warm up engine until coolant temperature is higher than 75°C (167°F). 2) Place the select lever in “P” range or “N” range. 3) Turn the A/C switch to OFF. 4) Turn all the accessory switches to OFF. 5) Open the front hood. 6) Measure the ambient temperature. 7) Read the value of «Intake Air Temp.» using the Subaru Select Monitor or a general scan tool. NOTE: • Subaru Select Monitor For detailed operation procedures, refer to “READ CURRENT DATA FOR ENGINE”. <Ref. to EN(H6DO)(diag)-35, Subaru Select Monitor.> • General scan tool For detailed operation procedures, refer to the general scan tool operation manual.	Subtract ambient temperature from «Intake Air Temp.». Is the obtained value –10 — 50°C (–18 — 90°F)?	Go to step **9**.	Check the mass air flow and intake air temperature sensor. <Ref. to FU(H6DO)-41, Mass Air Flow and Intake Air Temperature Sensor.>
9	**CHECK OUTPUT SIGNAL OF ECM.** 1) Turn the ignition switch to ON. 2) Measure the voltage between ECM and chassis ground on faulty cylinders. ***Connector & terminal*** ***#1 (B134) No. 10 (+) — Chassis ground (–):*** ***#2 (B134) No. 11 (+) — Chassis ground (–):*** ***#3 (B134) No. 12 (+) — Chassis ground (–):*** ***#4 (B134) No. 13 (+) — Chassis ground (–):*** ***#5 (B134) No. 23 (+) — Chassis ground (–):*** ***#6 (B134) No. 24 (+) — Chassis ground (–):***	Is the voltage 10 V or more?	Go to step **14**.	Go to step **10**.
10	**CHECK HARNESS BETWEEN ECM AND FUEL INJECTOR.** 1) Turn the ignition switch to OFF. 2) Disconnect the connector from fuel injector on faulty cylinders. 3) Measure the resistance between fuel injector connector and engine ground on faulty cylinders. ***Connector & terminal*** ***#1 (E5) No. 1 — Engine ground:*** ***#2 (E16) No. 1 — Engine ground:*** ***#3 (E6) No. 1 — Engine ground:*** ***#4 (E17) No. 1 — Engine ground:*** ***#5 (E43) No. 1 — Engine ground:*** ***#6 (E44) No. 1 — Engine ground:***	Is the resistance 1 MΩ or more?	Go to step **11**.	Repair the ground short circuit of harness between ECM and fuel injector.
11	**CHECK HARNESS BETWEEN ECM AND FUEL INJECTOR.** Measure the resistance of harness between ECM and fuel injector on faulty cylinders. ***Connector & terminal*** ***#1 (B134) No. 10 — (E5) No. 1:*** ***#2 (B134) No. 11 — (E16) No. 1:*** ***#3 (B134) No. 12 — (E6) No. 1:*** ***#4 (B134) No. 13 — (E17) No. 1:*** ***#5 (B134) No. 23 — (E43) No. 1:*** ***#6 (B134) No. 24 — (E44) No. 1:***	Is the resistance less than 1 Ω?	Go to step **12**.	Repair the harness and connector. NOTE: In this case, repair the following item: • Open circuit in harness between ECM and fuel injector connector • Poor contact of coupling connector

GETtheMANUALS.org

	Step	Check	Yes	No
12	**CHECK FUEL INJECTOR.** Measure the resistance between fuel injector terminals on faulty cylinder. ***Terminals*** ***No. 1 — No. 2:***	Is the resistance 5 — 20 Ω?	Go to step **13**.	Replace the faulty fuel injector. <Ref. to FU(H6DO)-44, Fuel Injector.>
13	**CHECK POWER SUPPLY LINE.** 1) Turn the ignition switch to ON. 2) Measure the voltage between fuel injector and engine ground on faulty cylinders. ***Connector & terminal*** ***#1 (E5) No. 2 (+) — Engine ground (–):*** ***#2 (E16) No. 2 (+) — Engine ground (–):*** ***#3 (E6) No. 2 (+) — Engine ground (–):*** ***#4 (E17) No. 2 (+) — Engine ground (–):*** ***#5 (E43) No. 2 (+) — Engine ground (–):*** ***#6 (E44) No. 2 (+) — Engine ground (–):***	Is the voltage 10 V or more?	Repair the poor contact of all connectors in fuel injector circuit.	Repair the harness and connector. NOTE: In this case, repair the following item: • Open circuit in harness between the main relay and fuel injector on faulty cylinders • Poor contact of coupling connector • Poor contact of main relay connector
14	**CHECK HARNESS BETWEEN ECM AND FUEL INJECTOR.** 1) Turn the ignition switch to OFF. 2) Disconnect the connector from fuel injector on faulty cylinders. 3) Turn the ignition switch to ON. 4) Measure the voltage between ECM and chassis ground on faulty cylinders. ***Connector & terminal*** ***#1 (B134) No. 10 (+) — Chassis ground (–):*** ***#2 (B134) No. 11 (+) — Chassis ground (–):*** ***#3 (B134) No. 12 (+) — Chassis ground (–):*** ***#4 (B134) No. 13 (+) — Chassis ground (–):*** ***#5 (B134) No. 23 (+) — Chassis ground (–):*** ***#6 (B134) No. 24 (+) — Chassis ground (–):***	Is the voltage 10 V or more?	Repair the short circuit to power in the harness between the ECM and fuel injector.	Go to step **15**.
15	**CHECK FUEL INJECTOR.** 1) Turn the ignition switch to OFF. 2) Measure the resistance between fuel injector terminals on faulty cylinder. ***Terminals*** ***No. 1 — No. 2:***	Is the resistance 5 — 20 Ω?	Go to step **16**.	Replace the faulty fuel injector. <Ref. to FU(H6DO)-44, Fuel Injector.>
16	**CHECK INSTALLATION OF CAMSHAFT POSITION SENSOR/CRANKSHAFT POSITION SENSOR.**	Is the camshaft position sensor or crankshaft position sensor loosely installed?	Tighten the camshaft position sensor or crankshaft position sensor.	Go to step **17**.
17	**CHECK CRANK PLATE.**	Is the crank sprocket rusted or the teeth of crank plate broken?	Replace the crank plate. <Ref. to ME(H6DO)-104, Cylinder Block.>	Go to step **18**.
18	**CHECK INSTALLATION CONDITION OF TIMING CHAIN.** Turn the crankshaft using ST, and align the alignment mark on crank sprocket with alignment mark on cylinder block. ST 18252AA000 CRANKSHAFT SOCKET	Is the timing chain dislocated from its proper position?	Correct the installation condition of timing chain. <Ref. to ME(H6DO)-62, Timing Chain Assembly.>	Go to step **19**.

GETthemMANUALS.org

	Step	Check	Yes	No
19	**CHECK ELECTRONIC THROTTLE CONTROL RELAY.** 1) Turn the ignition switch to OFF. 2) Remove the electronic throttle control relay. 3) Connect the battery to terminals No. 13 and No. 14 of electronic throttle control relay. 4) Measure the resistance between electronic throttle control relay terminals. ***Terminals*** ***No. 15 — No. 16:***	Is the resistance less than 1 Ω?	Go to step **20**.	Replace the electronic throttle control relay. <Ref. to EN(H6DO)(diag)-9, Electrical Component Location.>
20	**CHECK POWER SUPPLY OF ELECTRONIC THROTTLE CONTROL RELAY.** Measure the voltage between electronic throttle control relay connector and chassis ground. ***Connector & terminal*** ***(B220) No. 16 (+) — Chassis ground (–):***	Is the voltage 10 V or more?	Go to step **21**.	Repair the open or ground short circuit of power supply circuit.
21	**CHECK HARNESS BETWEEN ECM AND ELECTRONIC THROTTLE CONTROL RELAY.** 1) Disconnect the connector from ECM. 2) Turn the ignition switch to ON. 3) Measure the voltage between electronic throttle control relay connector and chassis ground. ***Connector & terminal*** ***(B220) No. 14 (+) — Chassis ground (–):***	Is the voltage 10 V or more?	Repair the short circuit to power in harness between ECM and electronic throttle control relay.	Go to step **22**.
22	**CHECK HARNESS BETWEEN ECM AND ELECTRONIC THROTTLE CONTROL RELAY.** 1) Turn the ignition switch to OFF. 2) Measure the resistance between electronic throttle control relay connector and chassis ground. ***Connector & terminal*** ***(B220) No. 14 — Chassis ground:*** ***(B220) No. 15 — Chassis ground:***	Is the resistance 1 MΩ or more?	Go to step **23**.	Repair the ground short circuit of harness between ECM and electronic throttle control relay.
23	**CHECK HARNESS BETWEEN ECM AND ELECTRONIC THROTTLE CONTROL RELAY.** Measure the resistance between ECM and electronic throttle control relay connector. ***Connector & terminal*** ***(B135) No. 17 — (B220) No. 14:*** ***(B135) No. 7 — (B220) No. 15:***	Is the resistance less than 1 Ω?	Go to step **24**.	Repair the open circuit of harness between ECM and electronic throttle control relay.
24	**CHECK HARNESS BETWEEN ECM AND ELECTRONIC THROTTLE CONTROL.** 1) Turn the ignition switch to OFF. 2) Disconnect the connectors from ECM and electronic throttle control. 3) Measure the resistance between ECM and chassis ground. ***Connector & terminal*** ***(B134) No. 19 — Chassis ground:*** ***(B134) No. 18 — Chassis ground:*** ***(B134) No. 18 — (B136) No. 4:*** ***(B134) No. 28 — Chassis ground:***	Is the resistance 1 MΩ or more?	Go to step **25**.	Repair the short circuit to ground in harness between ECM and electronic throttle control connector.

GETTHEMANUALS.org

Step		Check	Yes	No
25	**CHECK SHORT CIRCUIT INSIDE THE ECM.** 1) Connect the connector to ECM. 2) Measure the resistance between electronic throttle control connector and engine ground. ***Connector & terminal*** ***(E57) No. 6 — Engine ground:*** ***(E57) No. 4 — Engine ground:***	Is the resistance 1 MΩ or more?	Go to step **26**.	Repair the short circuit to ground in harness between ECM and electronic throttle control connector. Replace the ECM if defective. <Ref. to FU(H6DO)-54, Engine Control Module (ECM).>
26	**CHECK HARNESS BETWEEN ECM AND ELECTRONIC THROTTLE CONTROL.** 1) Disconnect the connector from ECM. 2) Measure the resistance of harness between ECM and electronic throttle control connector. ***Connector & terminal*** ***(B134) No. 18 — (E57) No. 6:*** ***(B134) No. 28 — (E57) No. 4:*** ***(B134) No. 29 — (E57) No. 3:***	Is the resistance less than 1 Ω?	Go to step **27**.	Repair the harness and connector. NOTE: In this case, repair the following item: • Open circuit in harness between ECM and electronic throttle control connector • Poor contact of coupling connector
27	**CHECK HARNESS BETWEEN ECM AND ELECTRONIC THROTTLE CONTROL.** 1) Connect the connector to ECM. 2) Measure the resistance between electronic throttle control connector and engine ground. ***Connector & terminal*** ***(E57) No. 3 — Engine ground:***	Is the resistance less than 5 Ω?	Go to step **28**.	Repair the harness and connector. NOTE: In this case, repair the following item: • Open circuit of harness between ECM and engine ground • Poor contact of ECM connector • Poor contact of coupling connector
28	**CHECK HARNESS BETWEEN ECM AND ELECTRONIC THROTTLE CONTROL.** 1) Turn the ignition switch to ON. 2) Measure the voltage between electronic throttle control connector and engine ground. ***Connector & terminal*** ***(E57) No. 6 (+) — Engine ground (–):*** ***(E57) No. 4 (+) — Engine ground (–):***	Is the voltage 5 V or more?	Repair the short circuit to power in harness between ECM and electronic throttle control connector.	Go to step **29**.
29	**CHECK HARNESS BETWEEN ECM AND ELECTRONIC THROTTLE CONTROL.** 1) Turn the ignition switch to OFF. 2) Disconnect the connector from ECM. 3) Measure the resistance between ECM connectors. ***Connector & terminal*** ***(B134) No. 19 — (B134) No. 18:*** ***(B134) No. 19 — (B134) No. 28:***	Is the resistance 1 MΩ or more?	Go to step **30**.	Repair the short circuit to power in harness between ECM and electronic throttle control connector.

GETTHEMANUALS.org

	Step	Check	Yes	No
30	**CHECK SENSOR OUTPUT.** 1) Connect all connectors. 2) Turn the ignition switch to ON. 3) Read the value of «Main-Throttle Sensor» using Subaru Select Monitor. NOTE: For detailed operation procedures, refer to "READ CURRENT DATA FOR ENGINE". <Ref. to EN(H6DO)(diag)-35, Subaru Select Monitor.>	Is the value of «Main-Throttle Sensor» 0.81 — 0.87 V?	Go to step **31**.	Repair the poor contact of electronic throttle control connector. Replace the electronic throttle control if defective. <Ref. to FU(H6DO)-19, Throttle Body.>
31	**CHECK SENSOR OUTPUT.** Read the value of «Sub-Throttle Sensor» using Subaru Select Monitor. NOTE: For detailed operation procedures, refer to "READ CURRENT DATA FOR ENGINE". <Ref. to EN(H6DO)(diag)-35, Subaru Select Monitor.>	Is the value of «Sub-Throttle Sensor» 1.64 — 1.70 V?	Go to step **32**.	Repair the poor contact of electronic throttle control connector. Replace the electronic throttle control if defective. <Ref. to FU(H6DO)-19, Throttle Body.>
32	**CHECK HARNESS BETWEEN ECM AND ELECTRONIC THROTTLE CONTROL MOTOR.** 1) Turn the ignition switch to OFF. 2) Disconnect the connectors from ECM and electronic throttle control. 3) Measure the resistance between ECM and electronic throttle control connector. ***Connector & terminal*** ***(B134) No. 1 — (E57) No. 1:*** ***(B134) No. 2 — (E57) No. 2:***	Is the resistance less than 1 Ω?	Go to step **33**.	Repair the harness and connector. NOTE: In this case, repair the following item: • Open circuit in harness between ECM and electronic throttle control • Poor contact of coupling connector
33	**CHECK HARNESS BETWEEN ECM AND ELECTRONIC THROTTLE CONTROL MOTOR.** 1) Connect the connector to ECM. 2) Turn the ignition switch to ON. 3) Measure the voltage between electronic throttle control connector and engine ground. ***Connector & terminal*** ***(E57) No. 2 (+) — Engine ground (–):*** ***(E57) No. 1 (+) — Engine ground (–):***	Is the voltage 5 V or more?	Repair the short circuit to power in the harness between ECM and electronic throttle control.	Go to step **34**.
34	**CHECK HARNESS BETWEEN ECM AND ELECTRONIC THROTTLE CONTROL MOTOR.** 1) Turn the ignition switch to OFF. 2) Disconnect the connector from ECM. 3) Measure the resistance between electronic throttle control connector and engine ground. ***Connector & terminal*** ***(E57) No. 2 — Engine ground:*** ***(E57) No. 1 — Engine ground:***	Is the resistance 1 MΩ or more?	Go to step **35**.	Repair the short circuit to ground in harness between ECM and electronic throttle control.
35	**CHECK ELECTRONIC THROTTLE CONTROL MOTOR HARNESS.** Measure the resistance between electronic throttle control connectors. ***Connector & terminal*** ***(E57) No. 2 — (E57) No. 1:***	Is the resistance 1 MΩ or more?	Go to step **36**.	Repair the short circuit of harness between ECM and electronic throttle control.

GETtheMANUALS.org

Step		Check	Yes	No
36	**CHECK ELECTRONIC THROTTLE CONTROL GROUND CIRCUIT.** Measure the resistance between ECM and chassis ground. ***Connector & terminal*** ***(B134) No. 3 — Chassis ground:*** ***(B134) No. 4 — Chassis ground:*** ***(B134) No. 6 — Chassis ground:*** ***(B137) No. 1 — Chassis ground:*** ***(B137) No. 3 — Chassis ground:*** ***(B137) No. 5 — Chassis ground:***	Is the resistance less than 5 Ω?	Go to step **37**.	Repair the harness and connector. NOTE: In this case, repair the following item: • Open circuit of harness between ECM and engine ground • Poor contact of coupling connector
37	**CHECK ELECTRONIC THROTTLE CONTROL.** Measure the resistance between electronic throttle control terminals. ***Terminals*** ***No. 2 — No. 1:***	Is the resistance 50 Ω or less?	Go to step **38**.	Replace the electronic throttle control. <Ref. to FU(H6DO)-19, Throttle Body.>
38	**CHECK ELECTRONIC THROTTLE CONTROL.** Move the throttle valve to the fully open and fully closed positions with fingers. Check that the valve returns to the specified position when releasing fingers.	Does the valve return to the specified position? Standard value: 3 mm (0.12 in) from fully closed position	Repair the poor contact of ECM connector.	Replace the electronic throttle control. <Ref. to FU(H6DO)-19, Throttle Body.>

DV:DTC P050B COLD START IGNITION TIMING PERFORMANCE

NOTE:
For the diagnostic procedure, refer to DTC P050A. <Ref. to EN(H6DO)(diag)-262, DTC P050A COLD START IDLE AIR CONTROL SYSTEM PERFORMANCE, Diagnostic Procedure with Diagnostic Trouble Code (DTC).>

GETTHEMANUALS.org

DW:DTC P0512 STARTER REQUEST CIRCUIT

DTC DETECTING CONDITION:

- Immediately at fault recognition
- GENERAL DESCRIPTION <Ref. to GD(H6DO)-199, DTC P0512 STARTER REQUEST CIRCUIT, Diagnostic Trouble Code (DTC) Detecting Criteria.>

TROUBLE SYMPTOM:

Failure of engine to start

CAUTION:

After servicing or replacing faulty parts, perform Clear Memory Mode <Ref. to EN(H6DO)(diag)-57, OPERATION, Clear Memory Mode.>, and Inspection Mode <Ref. to EN(H6DO)(diag)-44, PROCEDURE, Inspection Mode.>.

WIRING DIAGRAM:

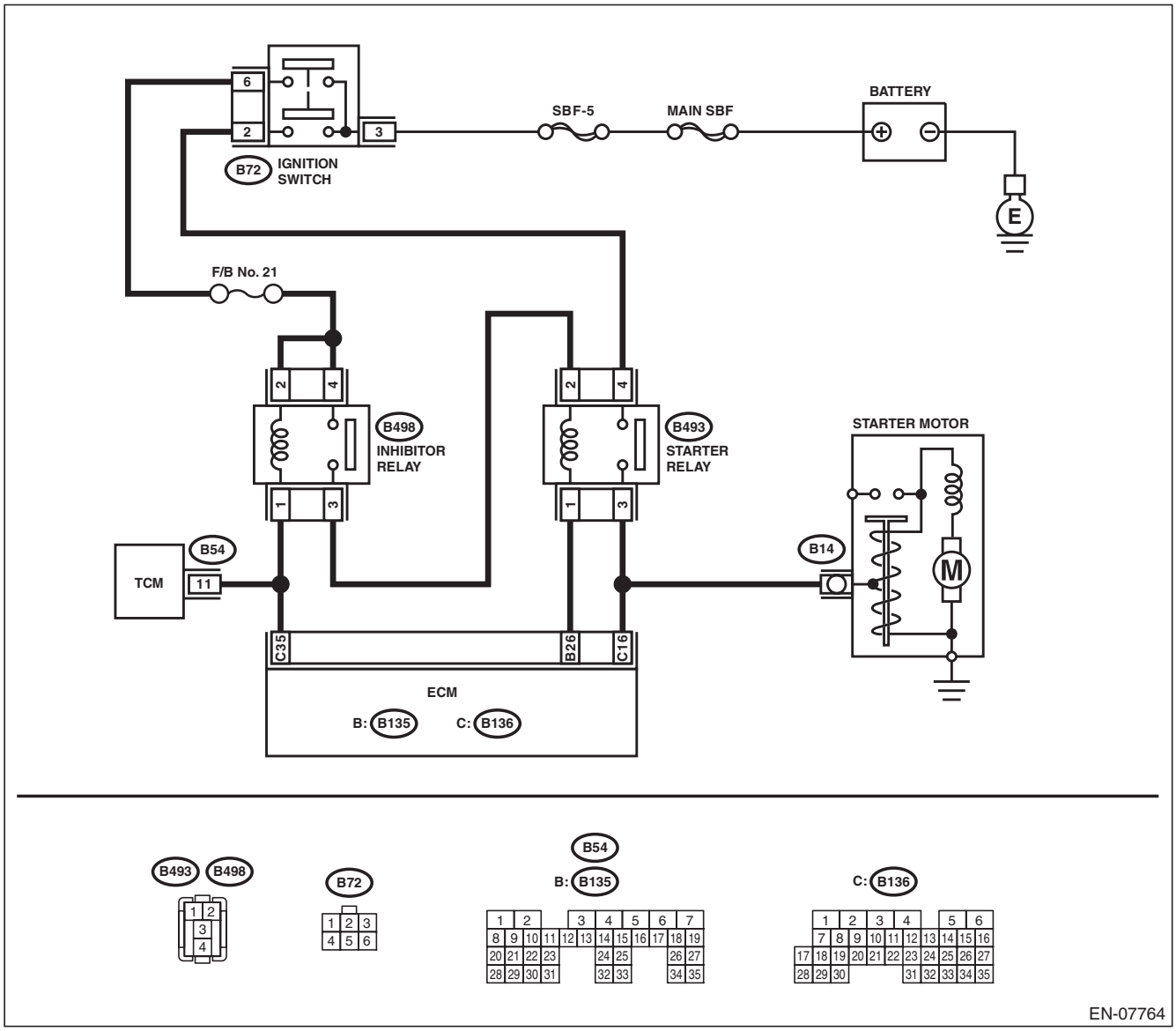

GETtheMANUALS.org

Step		Check	Yes	No
1	**CHECK FOR ANY OTHER DTC ON DISPLAY.**	Is any other DTC displayed?	Check the appropriate DTC using the “List of Diagnostic Trouble Code (DTC)”. <Ref. to EN(H6DO)(diag)-85, List of Diagnostic Trouble Code (DTC).>	Go to step **2**.
2	**CHECK HARNESS BETWEEN ECM AND STARTER RELAY CONNECTOR.** 1) Turn the ignition switch to OFF. 2) Disconnect the connector from ECM. 3) Turn the ignition switch to ON. 4) Measure the voltage between ECM and chassis ground. ***Connector & terminal*** ***(B136) No. 16 (+) — Chassis ground (–):***	Is the voltage 10 V or more?	Repair the short circuit to power supply in harness between ECM and starter relay connector.	Repair the poor contact of ECM connector.

GETTHEMANUALS.org

DX:DTC P0604 INTERNAL CONTROL MODULE RANDOM ACCESS MEMORY (RAM) ERROR

DTC DETECTING CONDITION:

- Immediately at fault recognition
- GENERAL DESCRIPTION <Ref. to GD(H6DO)-201, DTC P0604 INTERNAL CONTROL MODULE RANDOM ACCESS MEMORY (RAM) ERROR, Diagnostic Trouble Code (DTC) Detecting Criteria.>

TROUBLE SYMPTOM:

- Engine does not start.
- Engine stalls.

CAUTION:

After servicing or replacing faulty parts, perform Clear Memory Mode <Ref. to EN(H6DO)(diag)-57, OPERATION, Clear Memory Mode.>, and Inspection Mode <Ref. to EN(H6DO)(diag)-44, PROCEDURE, Inspection Mode.>.

Step	Check	Yes	No
1 CHECK FOR ANY OTHER DTC ON DISPLAY.	Is any other DTC displayed?	Check the appropriate DTC using the “List of Diagnostic Trouble Code (DTC)”. <Ref. to EN(H6DO)(diag)-85, List of Diagnostic Trouble Code (DTC).>	Even if DTC is detected, the circuit has returned to a normal condition at this time. Reproduce the failure, and then perform the diagnosis again. NOTE: In this case, temporary poor contact of connector, temporary open or short circuit of harness may be the cause.

DY:DTC P0605 INTERNAL CONTROL MODULE READ ONLY MEMORY (ROM) ERROR

NOTE:
For the diagnostic procedure, refer to DTC P0607. <Ref. to EN(H6DO)(diag)-274, DTC P0607 THROTTLE CONTROL SYSTEM CIRCUIT RANGE/PERFORMANCE, Diagnostic Procedure with Diagnostic Trouble Code (DTC).>

GETTHEMANUALS.org

DZ:DTC P0607 THROTTLE CONTROL SYSTEM CIRCUIT RANGE/PERFORMANCE

DTC DETECTING CONDITION:

- Immediately at fault recognition
- GENERAL DESCRIPTION <Ref. to GD(H6DO)-203, DTC P0607 THROTTLE CONTROL SYSTEM CIRCUIT RANGE/PERFORMANCE, Diagnostic Trouble Code (DTC) Detecting Criteria.>

TROUBLE SYMPTOM:

- Improper idling
- Poor driving performance

CAUTION:

After servicing or replacing faulty parts, perform Clear Memory Mode <Ref. to EN(H6DO)(diag)-57, OPERATION, Clear Memory Mode.>, and Inspection Mode <Ref. to EN(H6DO)(diag)-44, PROCEDURE, Inspection Mode.>.

WIRING DIAGRAM:

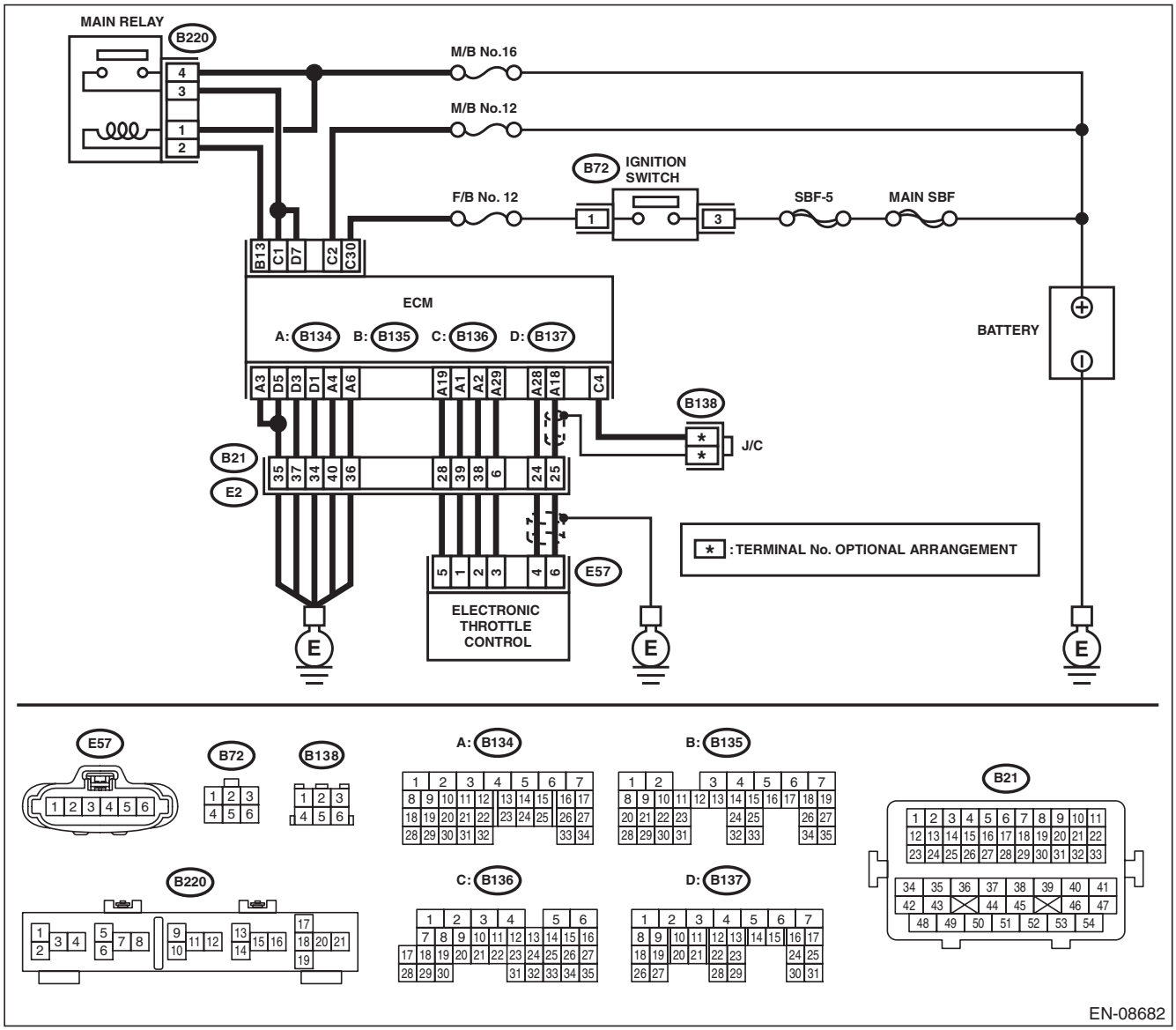

GET THE MANUALS.org

	Step	Check	Yes	No
1	**CHECK INPUT VOLTAGE OF ECM.** 1) Turn the ignition switch to ON. 2) Measure the voltage between ECM and chassis ground. ***Connector & terminal*** ***(B136) No. 1 (+) — Chassis ground (–):*** ***(B137) No. 7 (+) — Chassis ground (–):***	Is the voltage 10 — 13 V?	Go to step **2**.	Repair the open or ground short circuit of power supply circuit.
2	**CHECK INPUT VOLTAGE OF ECM.** 1) Start the engine. 2) Measure the voltage between ECM and chassis ground. ***Connector & terminal*** ***(B136) No. 1 (+) — Chassis ground (–):*** ***(B137) No. 7 (+) — Chassis ground (–):***	Is the voltage 13 — 15 V?	Go to step **3**.	Repair the open or ground short circuit of power supply circuit.
3	**CHECK HARNESS BETWEEN ECM AND ELECTRONIC THROTTLE CONTROL.** 1) Turn the ignition switch to OFF. 2) Disconnect the connectors from ECM and electronic throttle control. 3) Measure the resistance of harness between ECM and electronic throttle control connector. ***Connector & terminal*** ***(B134) No. 19 — (E57) No. 5:*** ***(B134) No. 29 — (E57) No. 3:***	Is the resistance less than 1 Ω?	Go to step **4**.	Repair the harness and connector. NOTE: In this case, repair the following item: • Open circuit in harness between ECM and electronic throttle control connector • Poor contact of coupling connector
4	**CHECK ECM GROUND HARNESS.** 1) Connect all connectors. 2) Turn the ignition switch to ON. 3) Measure the voltage between ECM and chassis ground. ***Connector & terminal*** ***(B134) No. 3 (+) — Chassis ground (–):*** ***(B134) No. 4 (+) — Chassis ground (–):*** ***(B134) No. 6 (+) — Chassis ground (–):*** ***(B137) No. 1 (+) — Chassis ground (–):*** ***(B137) No. 3 (+) — Chassis ground (–):*** ***(B137) No. 5 (+) — Chassis ground (–):***	Is the voltage less than 1 V?	Repair the poor contact of ECM connector.	Repair the harness and connector. NOTE: In this case, repair the following item: • Open circuit in ground circuit • Further tightening of the engine ground terminal • Poor contact of coupling connector

EA:DTC P0638 THROTTLE ACTUATOR CONTROL RANGE/PERFORMANCE (BANK 1)

NOTE:
For the diagnostic procedure, refer to DTC P2101. <Ref. to EN(H6DO)(diag)-336, DTC P2101 THROTTLE ACTUATOR CONTROL MOTOR CIRCUIT RANGE/PERFORMANCE, Diagnostic Procedure with Diagnostic Trouble Code (DTC).>

EB:DTC P0700 TRANSMISSION CONTROL SYSTEM (MIL REQUEST)

NOTE:
For the diagnostic procedure, refer to AT section. <Ref. to 5AT(diag)-2, Basic Diagnostic Procedure.>

GETtheMANUALS.org

EC:DTC P1152 O2 SENSOR CIRCUIT RANGE/PERFORMANCE (LOW) (BANK1 SENSOR1)

DTC DETECTING CONDITION:

- Detected when two consecutive driving cycles with fault occur.
- GENERAL DESCRIPTION <Ref. to GD(H6DO)-208, DTC P1152 O2 SENSOR CIRCUIT RANGE/PERFORMANCE (LOW) (BANK1 SENSOR1), Diagnostic Trouble Code (DTC) Detecting Criteria.>

CAUTION:

After servicing or replacing faulty parts, perform Clear Memory Mode <Ref. to EN(H6DO)(diag)-57, OPERATION, Clear Memory Mode.>, and Inspection Mode <Ref. to EN(H6DO)(diag)-44, PROCEDURE, Inspection Mode.>.

WIRING DIAGRAM:

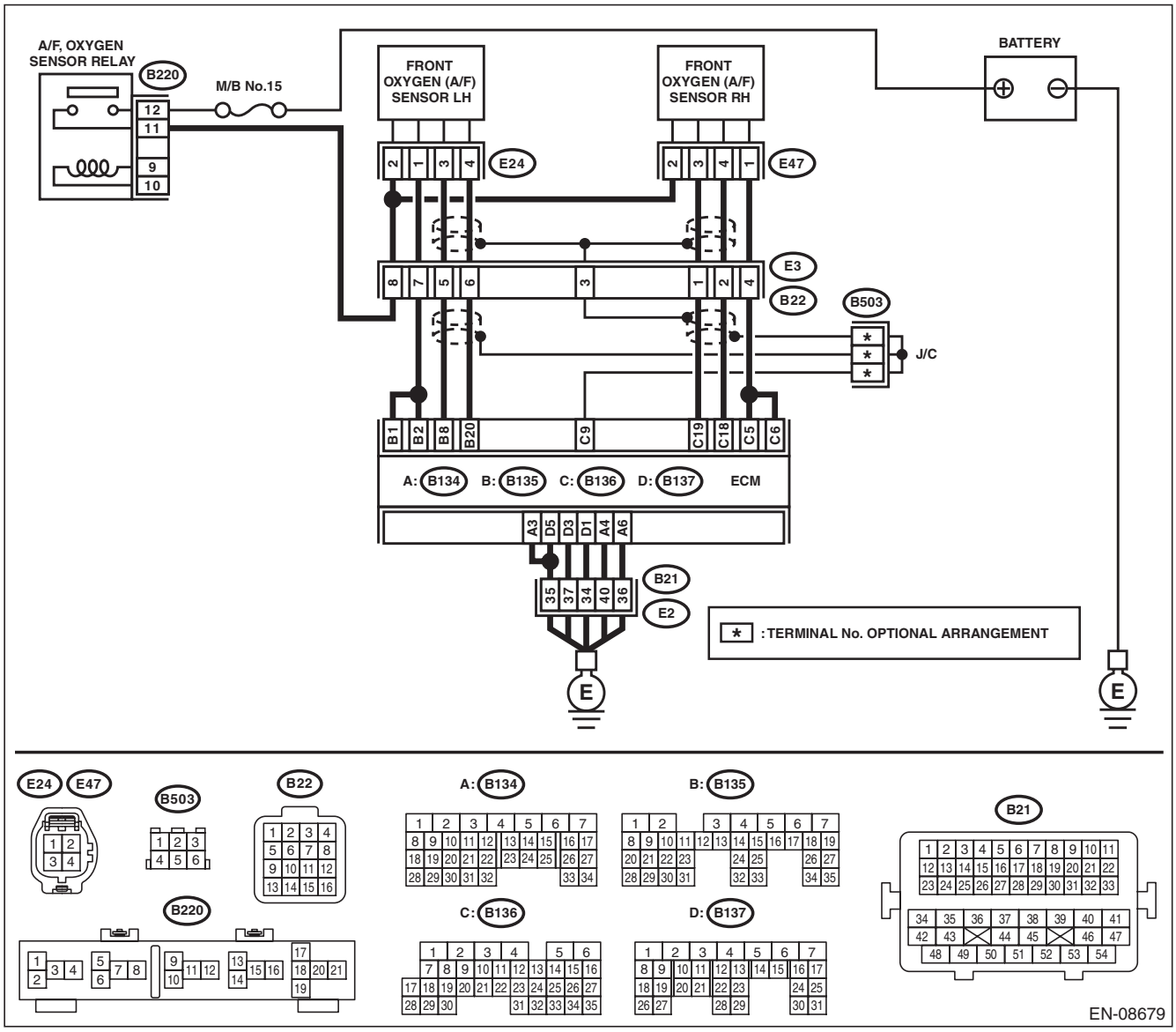

Step		Check	Yes	No
1	**CHECK FRONT OXYGEN (A/F) SENSOR CONNECTOR AND COUPLING CONNECTOR.**	Has water entered the connector?	Completely remove any water inside.	Go to step **2**.

GET THE MANUALS.org

Step		Check	Yes	No
2	**CHECK HARNESS BETWEEN ECM AND FRONT OXYGEN (A/F) SENSOR CONNECTOR.** 1) Turn the ignition switch to OFF. 2) Disconnect the connectors from ECM and front oxygen (A/F) sensor. 3) Measure the resistance of harness between ECM and front oxygen (A/F) sensor connector. ***Connector & terminal*** ***(B136) No. 19 — (E47) No. 3:*** ***(B136) No. 18 — (E47) No. 4:***	Is the resistance less than 1 Ω?	Go to step **3**.	Repair the harness and connector. NOTE: In this case, repair the following item: • Open circuit in harness between ECM and front oxygen (A/F) sensor connector • Poor contact of coupling connector
3	**CHECK FOR POOR CONTACT.** Check for poor contact of the front oxygen (A/F) sensor connector.	Is there poor contact of front oxygen (A/F) sensor connector?	Repair the poor contact of front oxygen (A/F) sensor connector.	Replace the front oxygen (A/F) sensor. <Ref. to FU(H6DO)-50, Front Oxygen (A/F) Sensor.>

GETTHEMANUALS.org

ED:DTC P1153 O2 SENSOR CIRCUIT RANGE/PERFORMANCE (HIGH) (BANK1 SENSOR1)

DTC DETECTING CONDITION:

- Detected when two consecutive driving cycles with fault occur.
- GENERAL DESCRIPTION <Ref. to GD(H6DO)-210, DTC P1153 O2 SENSOR CIRCUIT RANGE/PERFORMANCE (HIGH) (BANK1 SENSOR1), Diagnostic Trouble Code (DTC) Detecting Criteria.>

CAUTION:

After servicing or replacing faulty parts, perform Clear Memory Mode <Ref. to EN(H6DO)(diag)-57, OPERATION, Clear Memory Mode.>, and Inspection Mode <Ref. to EN(H6DO)(diag)-44, PROCEDURE, Inspection Mode.>.

WIRING DIAGRAM:

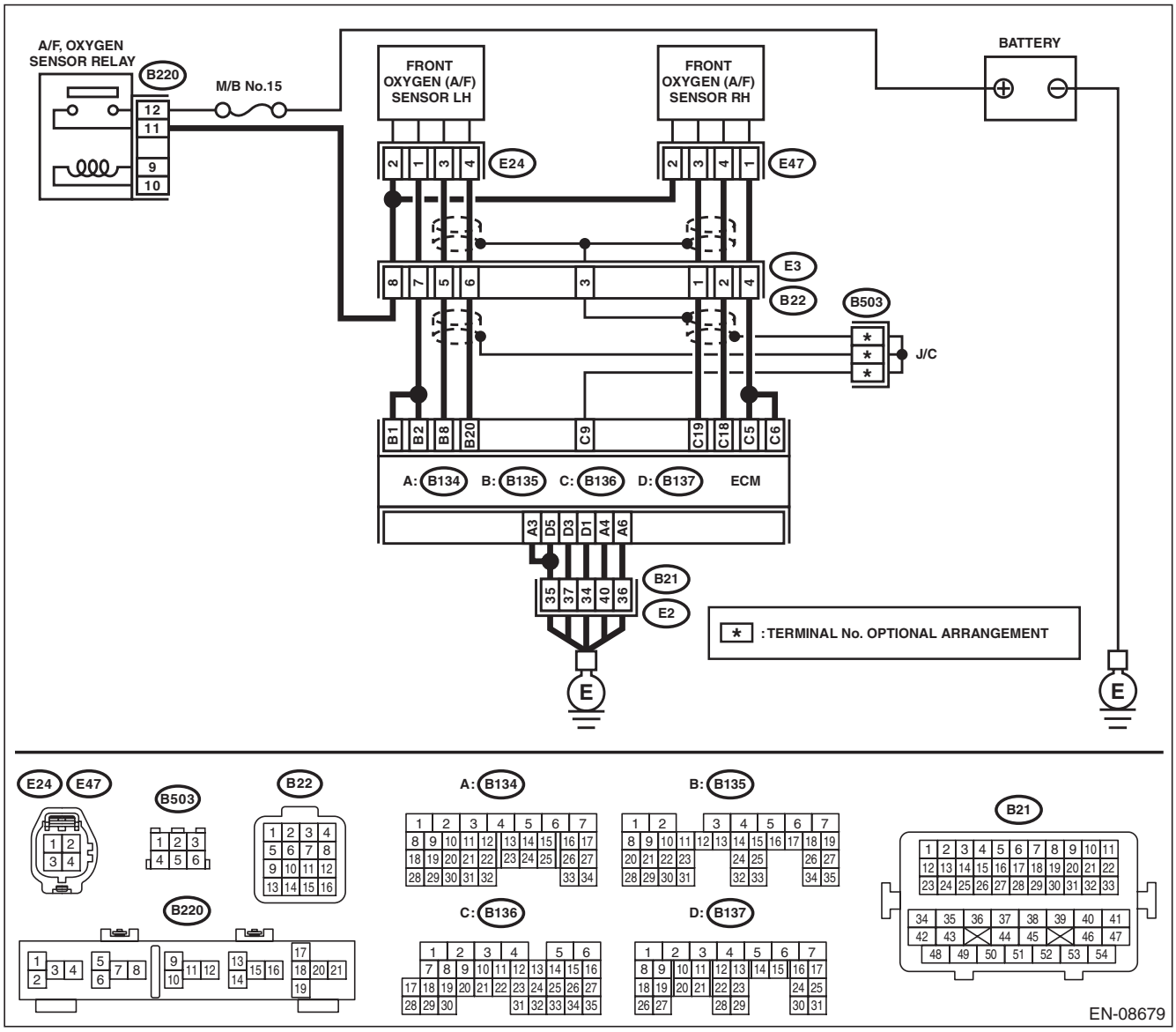

Step		Check	Yes	No
1	**CHECK FRONT OXYGEN (A/F) SENSOR CONNECTOR AND COUPLING CONNECTOR.**	Has water entered the connector?	Completely remove any water inside.	Go to step **2**.

GET THE MANUALS.org

Step		Check	Yes	No
2	**CHECK HARNESS BETWEEN ECM AND FRONT OXYGEN (A/F) SENSOR CONNECTOR.** 1) Turn the ignition switch to OFF. 2) Disconnect the connector from ECM. 3) Measure the resistance between ECM and chassis ground. ***Connector & terminal*** ***(B136) No. 19 — Chassis ground:*** ***(B136) No. 18 — Chassis ground:***	Is the resistance 1 MΩ or more?	Go to step **3**.	Repair the ground short circuit of harness between ECM and front oxygen (A/F) sensor connector.
3	**CHECK OUTPUT SIGNAL FOR ECM.** 1) Connect the connector to ECM. 2) Turn the ignition switch to ON. 3) Measure the voltage between ECM and chassis ground. ***Connector & terminal*** ***(B136) No. 19 (+) — Chassis ground (–):***	Is the voltage 4.5 V or more?	Go to step **5**.	Go to step **4**.
4	**CHECK OUTPUT SIGNAL FOR ECM.** Measure the voltage between ECM and chassis ground. ***Connector & terminal*** ***(B136) No. 18 (+) — Chassis ground (–):***	Is the voltage 4.95 V or more?	Go to step **5**.	Replace the front oxygen (A/F) sensor. <Ref. to FU(H6DO)-50, Front Oxygen (A/F) Sensor.>
5	**CHECK OUTPUT SIGNAL FOR ECM.** Measure the voltage between ECM and chassis ground. ***Connector & terminal*** ***(B136) No. 19 (+) — Chassis ground (–):*** ***(B136) No. 18 (+) — Chassis ground (–):***	Is the voltage 8 V or more?	Repair the short circuit to power in the harness between ECM and front oxygen (A/F) sensor connector. After repair, replace the ECM. <Ref. to FU(H6DO)-54, Engine Control Module (ECM).>	Repair the poor contact of ECM connector.

GETtheMANUALS.org

EE:DTC P1154 O2 SENSOR CIRCUIT RANGE/PERFORMANCE (LOW) (BANK 2 SENSOR 1)

DTC DETECTING CONDITION:

- Detected when two consecutive driving cycles with fault occur.
- GENERAL DESCRIPTION <Ref. to GD(H6DO)-212, DTC P1154 O2 SENSOR CIRCUIT RANGE/PERFORMANCE (LOW) (BANK 2 SENSOR 1), Diagnostic Trouble Code (DTC) Detecting Criteria.>

CAUTION:

After servicing or replacing faulty parts, perform Clear Memory Mode <Ref. to EN(H6DO)(diag)-57, OPERATION, Clear Memory Mode.>, and Inspection Mode <Ref. to EN(H6DO)(diag)-44, PROCEDURE, Inspection Mode.>.

WIRING DIAGRAM:

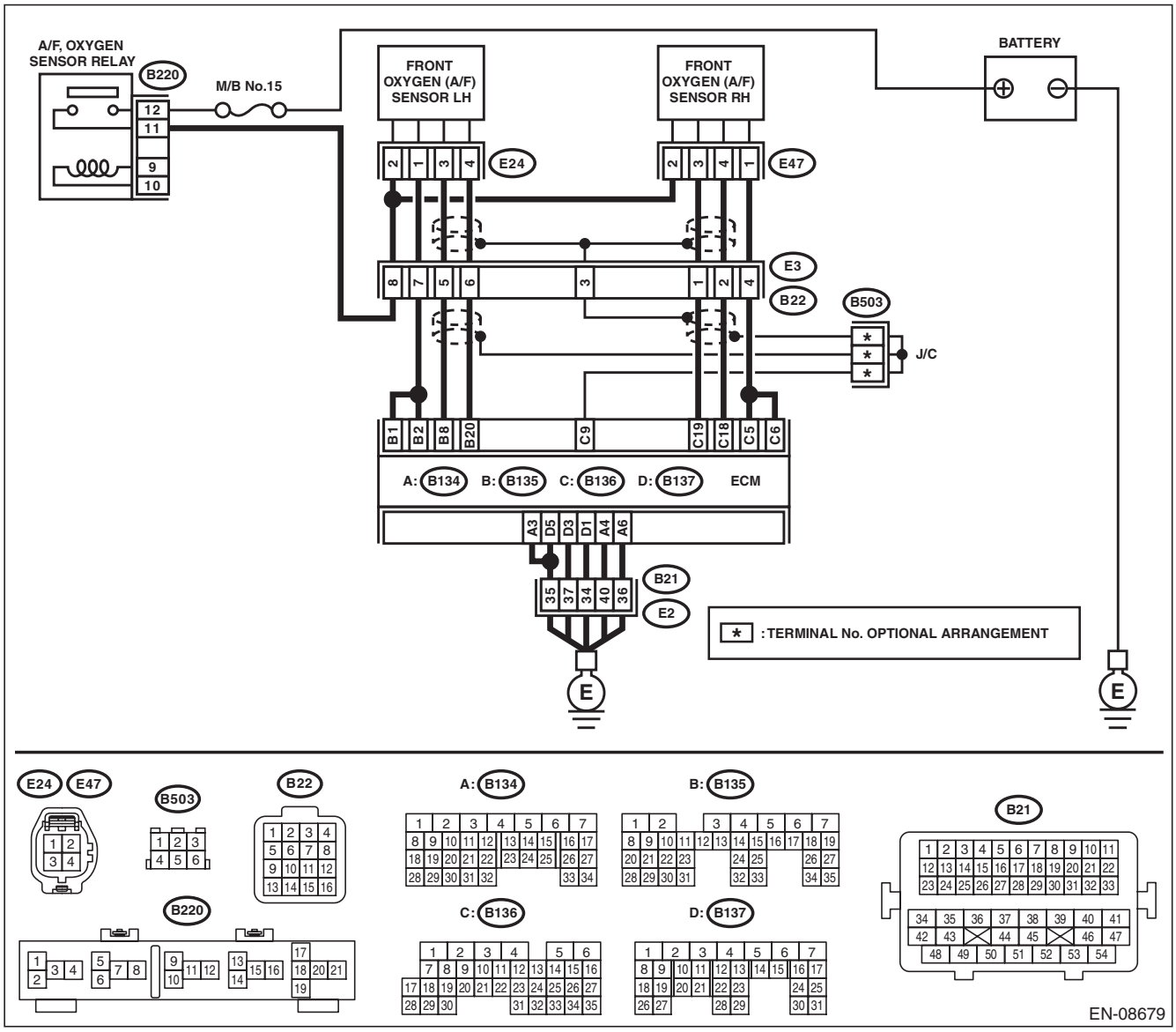

Step		Check	Yes	No
1	**CHECK FRONT OXYGEN (A/F) SENSOR CONNECTOR AND COUPLING CONNECTOR.**	Has water entered the connector?	Completely remove any water inside.	Go to step **2**.

GET-THEM-MANUALS.org

Step		Check	Yes	No
2	**CHECK HARNESS BETWEEN ECM AND FRONT OXYGEN (A/F) SENSOR CONNECTOR.** 1) Turn the ignition switch to OFF. 2) Disconnect the connectors from ECM and front oxygen (A/F) sensor. 3) Measure the resistance of harness between ECM and front oxygen (A/F) sensor connector. ***Connector & terminal*** ***(B135) No. 8 — (E24) No. 3:*** ***(B135) No. 20 — (E24) No. 4:***	Is the resistance less than 1 Ω?	Go to step **3**.	Repair the harness and connector. NOTE: In this case, repair the following item: • Open circuit in harness between ECM and front oxygen (A/F) sensor connector • Poor contact of coupling connector
3	**CHECK FOR POOR CONTACT.** Check for poor contact of the front oxygen (A/F) sensor connector.	Is there poor contact of front oxygen (A/F) sensor connector?	Repair the poor contact of front oxygen (A/F) sensor connector.	Replace the front oxygen (A/F) sensor. <Ref. to FU(H6DO)-50, Front Oxygen (A/F) Sensor.>

GETTHEMANUALS.org

EF:DTC P1155 O2 SENSOR CIRCUIT RANGE/PERFORMANCE (HIGH) (BANK 2 SENSOR 1)

DTC DETECTING CONDITION:

- Detected when two consecutive driving cycles with fault occur.
- GENERAL DESCRIPTION <Ref. to GD(H6DO)-212, DTC P1155 O2 SENSOR CIRCUIT RANGE/PERFORMANCE (HIGH) (BANK 2 SENSOR 1), Diagnostic Trouble Code (DTC) Detecting Criteria.>

CAUTION:

After servicing or replacing faulty parts, perform Clear Memory Mode <Ref. to EN(H6DO)(diag)-57, OPERATION, Clear Memory Mode.>, and Inspection Mode <Ref. to EN(H6DO)(diag)-44, PROCEDURE, Inspection Mode.>.

WIRING DIAGRAM:

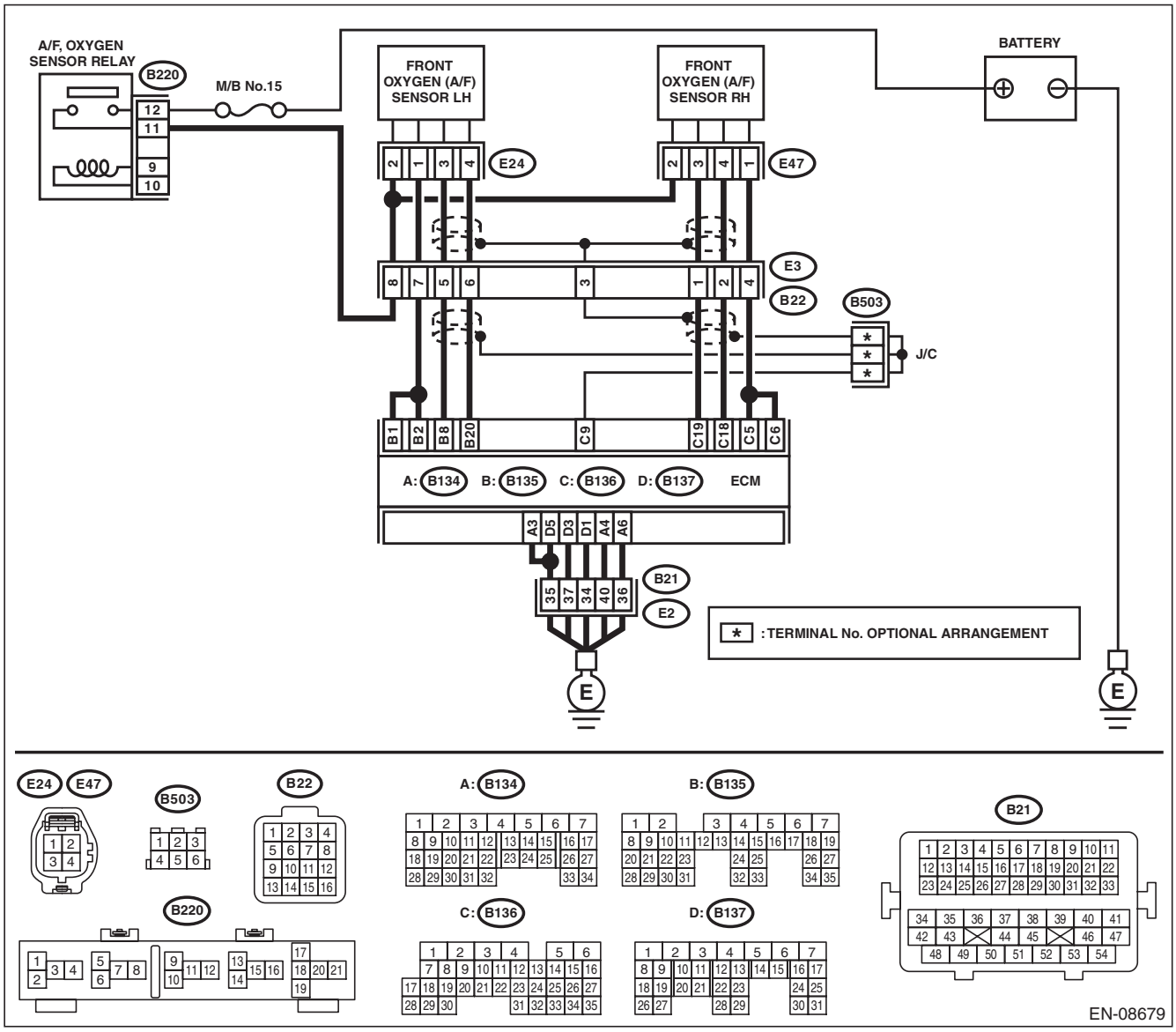

Step		Check	Yes	No
1	**CHECK FRONT OXYGEN (A/F) SENSOR CONNECTOR AND COUPLING CONNECTOR.**	Has water entered the connector?	Completely remove any water inside.	Go to step **2**.

GET-THEM-MANUALS.org

Step		Check	Yes	No
2	**CHECK HARNESS BETWEEN ECM AND FRONT OXYGEN (A/F) SENSOR CONNECTOR.** 1) Turn the ignition switch to OFF. 2) Disconnect the connector from ECM. 3) Measure the resistance between ECM and chassis ground. ***Connector & terminal*** ***(B135) No. 8 — Chassis ground:*** ***(B135) No. 20 — Chassis ground:***	Is the resistance 1 MΩ or more?	Go to step **3**.	Repair the ground short circuit of harness between ECM and front oxygen (A/F) sensor connector.
3	**CHECK OUTPUT SIGNAL FOR ECM.** 1) Connect the connector to ECM. 2) Turn the ignition switch to ON. 3) Measure the voltage between ECM and chassis ground. ***Connector & terminal*** ***(B135) No. 8 (+) — Chassis ground (–):***	Is the voltage 4.5 V or more?	Go to step **5**.	Go to step **4**.
4	**CHECK OUTPUT SIGNAL FOR ECM.** Measure the voltage between ECM and chassis ground. ***Connector & terminal*** ***(B135) No. 20 (+) — Chassis ground (–):***	Is the voltage 4.95 V or more?	Go to step **5**.	Replace the front oxygen (A/F) sensor. <Ref. to FU(H6DO)-50, Front Oxygen (A/F) Sensor.>
5	**CHECK OUTPUT SIGNAL FOR ECM.** Measure the voltage between ECM and chassis ground. ***Connector & terminal*** ***(B135) No. 8 (+) — Chassis ground (–):*** ***(B135) No. 20 (+) — Chassis ground (–):***	Is the voltage 8 V or more?	Repair the short circuit to power in the harness between ECM and front oxygen (A/F) sensor connector. After repair, replace the ECM. <Ref. to FU(H6DO)-54, Engine Control Module (ECM).>	Repair the poor contact of ECM connector.

EG:DTC P1160 RETURN SPRING FAILURE

NOTE:
For the diagnostic procedure, refer to DTC P2101. <Ref. to EN(H6DO)(diag)-336, DTC P2101 THROTTLE ACTUATOR CONTROL MOTOR CIRCUIT RANGE/PERFORMANCE, Diagnostic Procedure with Diagnostic Trouble Code (DTC).>

GETTHEMANUALS.org

EH:DTC P1443 VENT CONTROL SOLENOID VALVE FUNCTION PROBLEM

DTC DETECTING CONDITION:

- Immediately at fault recognition
- GENERAL DESCRIPTION <Ref. to GD(H6DO)-215, DTC P1443 VENT CONTROL SOLENOID VALVE FUNCTION PROBLEM, Diagnostic Trouble Code (DTC) Detecting Criteria.>

TROUBLE SYMPTOM:

Improper fuel supply

CAUTION:

After servicing or replacing faulty parts, perform Clear Memory Mode <Ref. to EN(H6DO)(diag)-57, OPERATION, Clear Memory Mode.>, and Inspection Mode <Ref. to EN(H6DO)(diag)-44, PROCEDURE, Inspection Mode.>.

Step		Check	Yes	No
1	**CHECK FOR ANY OTHER DTC ON DISPLAY.**	Is any other DTC displayed?	Check the appropriate DTC using the “List of Diagnostic Trouble Code (DTC)”. <Ref. to EN(H6DO)(diag)-85, List of Diagnostic Trouble Code (DTC).>	Go to step **2**.
2	**CHECK DRAIN HOSE.** Check the drain hose for clogging.	Is there clogging in the drain hose?	Replace the drain hose.	Go to step **3**.
3	**CHECK DRAIN VALVE OPERATION.** 1) Turn the ignition switch to OFF. 2) Install the delivery (test) mode fuse. **CAUTION:** **Do not use any fuses that are installed on the vehicle.** 3) Turn the ignition switch to ON. 4) Operate the drain valve. NOTE: Drain valve can be operated using the Subaru Select Monitor. For detailed procedures, refer to “SYSTEM OPERATION CHECK MODE”. <Ref. to EN(H6DO)(diag)-58, System Operation Check Mode.>	Does the drain valve operate?	Repair the poor contact of ECM connector.	Replace the drain valve. <Ref. to EC(H6DO)-18, Drain Valve.>

EI: DTC P1492 EGR SOLENOID VALVE SIGNAL #1 CIRCUIT MALFUNCTION (LOW INPUT)

NOTE:

For the diagnostic procedure, refer to DTC P1498. <Ref. to EN(H6DO)(diag)-286, DTC P1498 EGR SOLENOID VALVE SIGNAL #4 CIRCUIT MALFUNCTION (LOW INPUT), Diagnostic Procedure with Diagnostic Trouble Code (DTC).>

EJ:DTC P1493 EGR SOLENOID VALVE SIGNAL #1 CIRCUIT MALFUNCTION (HIGH INPUT)

NOTE:

For the diagnostic procedure, refer to DTC P1499. <Ref. to EN(H6DO)(diag)-289, DTC P1499 EGR SOLENOID VALVE SIGNAL #4 CIRCUIT MALFUNCTION (HIGH INPUT), Diagnostic Procedure with Diagnostic Trouble Code (DTC).>

GETTHEMANUALS.org

EK:DTC P1494 EGR SOLENOID VALVE SIGNAL #2 CIRCUIT MALFUNCTION (LOW INPUT)

NOTE:
For the diagnostic procedure, refer to DTC P1498. <Ref. to EN(H6DO)(diag)-286, DTC P1498 EGR SOLENOID VALVE SIGNAL #4 CIRCUIT MALFUNCTION (LOW INPUT), Diagnostic Procedure with Diagnostic Trouble Code (DTC).>

EL:DTC P1495 EGR SOLENOID VALVE SIGNAL #2 CIRCUIT MALFUNCTION (HIGH INPUT)

NOTE:
For the diagnostic procedure, refer to DTC P1499. <Ref. to EN(H6DO)(diag)-289, DTC P1499 EGR SOLENOID VALVE SIGNAL #4 CIRCUIT MALFUNCTION (HIGH INPUT), Diagnostic Procedure with Diagnostic Trouble Code (DTC).>

EM:DTC P1496 EGR SOLENOID VALVE SIGNAL #3 CIRCUIT MALFUNCTION (LOW INPUT)

NOTE:
For the diagnostic procedure, refer to DTC P1498. <Ref. to EN(H6DO)(diag)-286, DTC P1498 EGR SOLENOID VALVE SIGNAL #4 CIRCUIT MALFUNCTION (LOW INPUT), Diagnostic Procedure with Diagnostic Trouble Code (DTC).>

EN:DTC P1497 EGR SOLENOID VALVE SIGNAL #3 CIRCUIT MALFUNCTION (HIGH INPUT)

NOTE:
For the diagnostic procedure, refer to DTC P1499. <Ref. to EN(H6DO)(diag)-289, DTC P1499 EGR SOLENOID VALVE SIGNAL #4 CIRCUIT MALFUNCTION (HIGH INPUT), Diagnostic Procedure with Diagnostic Trouble Code (DTC).>

GETthemMANUALS.org

EO:DTC P1498 EGR SOLENOID VALVE SIGNAL #4 CIRCUIT MALFUNCTION (LOW INPUT)

DTC DETECTING CONDITION:

- Immediately at fault recognition
- GENERAL DESCRIPTION <Ref. to GD(H6DO)-217, DTC P1492 EGR SOLENOID VALVE SIGNAL #1 CIRCUIT MALFUNCTION (LOW INPUT), Diagnostic Trouble Code (DTC) Detecting Criteria.> <Ref. to GD(H6DO)-221, DTC P1494 EGR SOLENOID VALVE SIGNAL #2 CIRCUIT MALFUNCTION (LOW INPUT), Diagnostic Trouble Code (DTC) Detecting Criteria.> <Ref. to GD(H6DO)-221, DTC P1496 EGR SOLENOID VALVE SIGNAL #3 CIRCUIT MALFUNCTION (LOW INPUT), Diagnostic Trouble Code (DTC) Detecting Criteria.> <Ref. to GD(H6DO)-221, DTC P1498 EGR SOLENOID VALVE SIGNAL #4 CIRCUIT MALFUNCTION (LOW INPUT), Diagnostic Trouble Code (DTC) Detecting Criteria.>

TROUBLE SYMPTOM:

- Improper idling
- Poor driving performance
- Engine breathing

CAUTION:

After servicing or replacing faulty parts, perform Clear Memory Mode <Ref. to EN(H6DO)(diag)-57, OPERATION, Clear Memory Mode.>, and Inspection Mode <Ref. to EN(H6DO)(diag)-44, PROCEDURE, Inspection Mode.>.

GETTHEMANUALS.org

WIRING DIAGRAM:

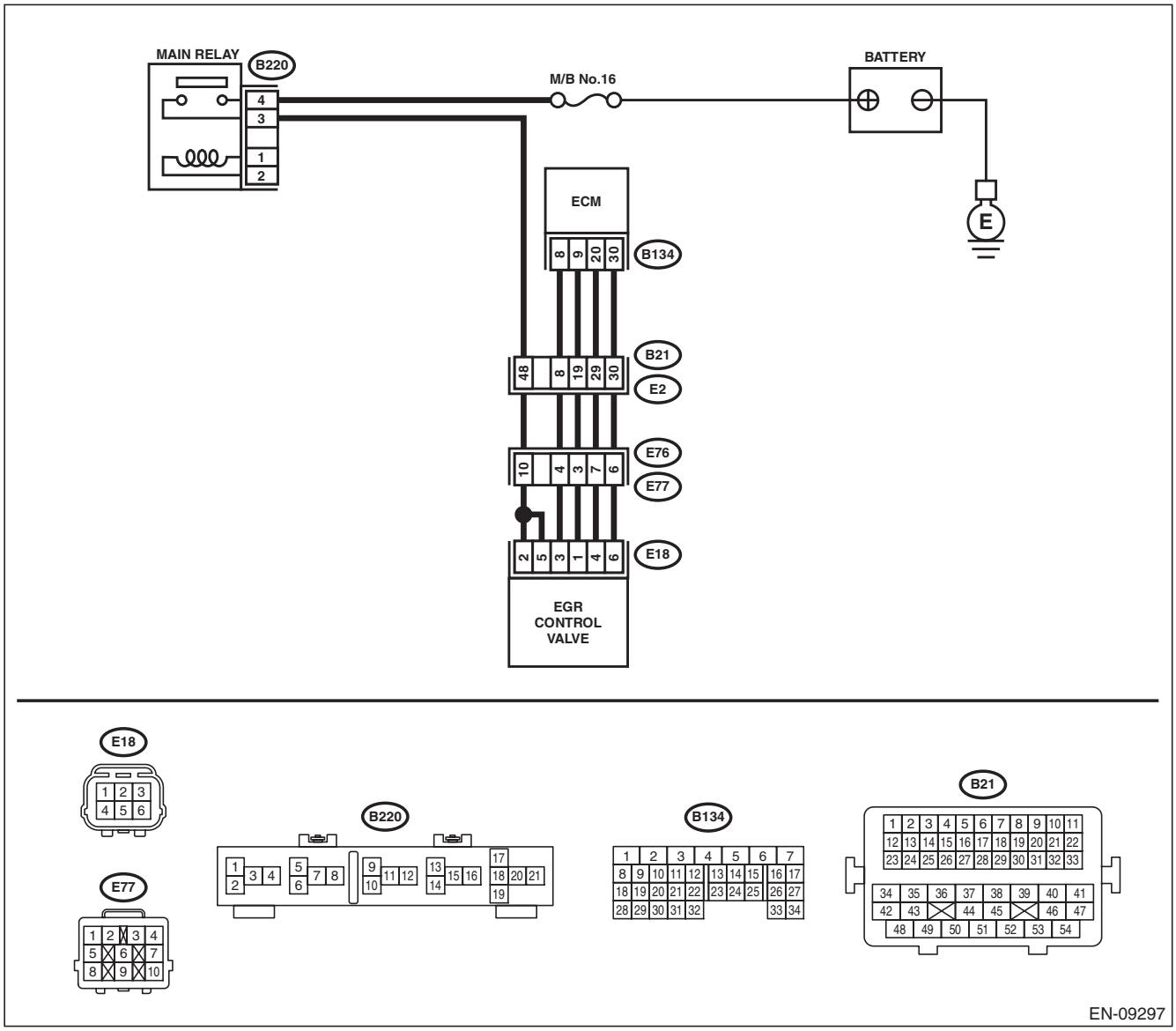

Step	Check	Yes	No
1 **CHECK POWER SUPPLY TO EGR CONTROL VALVE.** 1) Turn the ignition switch to OFF. 2) Disconnect the connector from the EGR control valve. 3) Turn the ignition switch to ON. 4) Measure the voltage between EGR control valve connector and engine ground. ***Connector & terminal*** ***(E18) No. 2 (+) — Engine ground (–):*** ***(E18) No. 5 (+) — Engine ground (–):***	Is the voltage 10 V or more?	Go to step **2**.	Repair the harness and connector. NOTE: In this case, repair the following item: • Open circuit in harness between EGR control valve connector and main relay connector • Poor contact of coupling connector

GETtheMANUALS.org

	Step	Check	Yes	No
2	**CHECK HARNESS BETWEEN ECM AND EGR CONTROL VALVE CONNECTOR.** 1) Turn the ignition switch to OFF. 2) Disconnect the connector from ECM. 3) Measure the resistance of harness between ECM and EGR control valve connector. ***Connector & terminal*** ***DTC P1492; (B134) No. 8 — (E18) No. 3:*** ***DTC P1494; (B134) No. 9 — (E18) No. 1:*** ***DTC P1496; (B134) No. 20 — (E18) No. 4:*** ***DTC P1498; (B134) No. 30 — (E18) No. 6:***	Is the resistance less than 1 Ω?	Go to step **3**.	Repair the harness and connector. NOTE: In this case, repair the following item: • Open circuit of harness between ECM and EGR control valve connector • Poor contact of coupling connector
3	**CHECK HARNESS BETWEEN ECM AND EGR CONTROL VALVE CONNECTOR.** 1) Disconnect the connector from ECM. 2) Measure the resistance between ECM and chassis ground. ***Connector & terminal*** ***DTC P1492; (B134) No. 8 — Chassis ground:*** ***DTC P1494; (B134) No. 9 — Chassis ground:*** ***DTC P1496; (B134) No. 20 — Chassis ground:*** ***DTC P1498; (B134) No. 30 — Chassis ground:***	Is the resistance 1 MΩ or more?	Go to step **4**.	Repair the ground short in harness between ECM and EGR control valve connector.
4	**CHECK FOR POOR CONTACT.** Check poor contact of ECM and EGR control valve connectors.	Is there poor contact in ECM or EGR control valve connector?	Repair the poor contact of ECM or EGR control valve connector.	Replace EGR control valve. <Ref. to FU(H6DO)-42, EGR Valve.>

GETTHEMANUALS.org

EP:DTC P1499 EGR SOLENOID VALVE SIGNAL #4 CIRCUIT MALFUNCTION (HIGH INPUT)

DTC DETECTING CONDITION:

- Immediately at fault recognition
- GENERAL DESCRIPTION <Ref. to GD(H6DO)-219, DTC P1493 EGR SOLENOID VALVE SIGNAL #1 CIRCUIT MALFUNCTION (HIGH INPUT), Diagnostic Trouble Code (DTC) Detecting Criteria.> <Ref. to GD(H6DO)-221, DTC P1495 EGR SOLENOID VALVE SIGNAL #2 CIRCUIT MALFUNCTION (HIGH INPUT), Diagnostic Trouble Code (DTC) Detecting Criteria.> <Ref. to GD(H6DO)-221, DTC P1497 EGR SOLENOID VALVE SIGNAL #3 CIRCUIT MALFUNCTION (HIGH INPUT), Diagnostic Trouble Code (DTC) Detecting Criteria.> <Ref. to GD(H6DO)-221, DTC P1499 EGR SOLENOID VALVE SIGNAL #4 CIRCUIT MALFUNCTION (HIGH INPUT), Diagnostic Trouble Code (DTC) Detecting Criteria.>

TROUBLE SYMPTOM:

- Improper idling
- Poor driving performance
- Engine breathing

CAUTION:

After servicing or replacing faulty parts, perform Clear Memory Mode <Ref. to EN(H6DO)(diag)-57, OPERATION, Clear Memory Mode.>, and Inspection Mode <Ref. to EN(H6DO)(diag)-44, PROCEDURE, Inspection Mode.>.

GETTHEMANUALS.org

WIRING DIAGRAM:

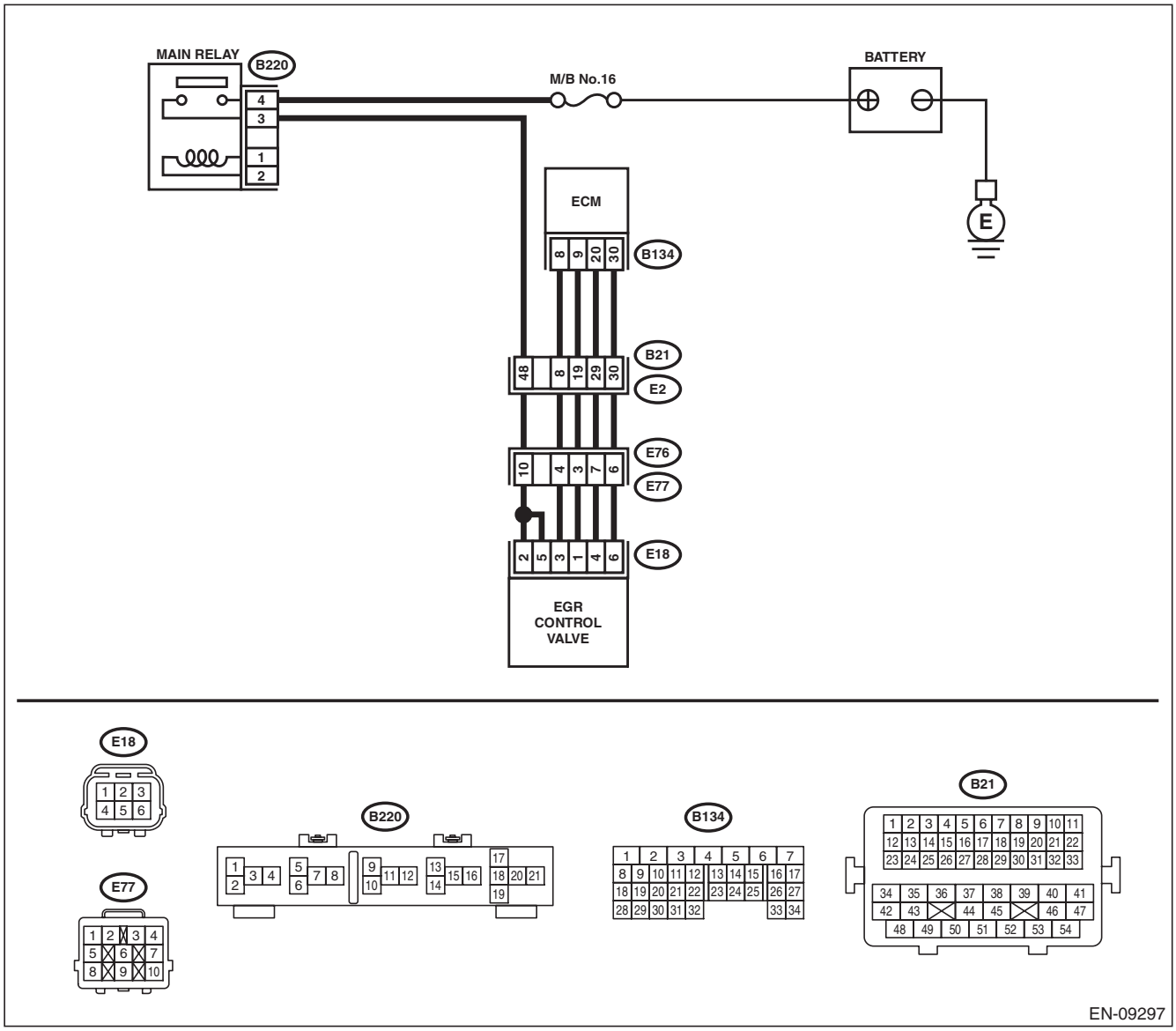

Step	Check	Yes	No
1 **CHECK HARNESS BETWEEN ECM AND EGR CONTROL VALVE CONNECTOR.** 1) Turn the ignition switch to OFF. 2) Disconnect the connector from ECM and EGR control valve. 3) Turn the ignition switch to ON. 4) Measure the voltage between ECM and chassis ground. ***Connector & terminal*** ***DTC P1493; (B134) No. 8 (+) — Chassis ground (–):*** ***DTC P1495; (B134) No. 9 (+) — Chassis ground (–):*** ***DTC P1497; (B134) No. 20 (+) — Chassis ground (–):*** ***DTC P1499; (B134) No. 30 (+) — Chassis ground (–):***	Is the voltage 10 V or more?	Repair the short circuit to power in the harness between the ECM and EGR control valve connector.	Go to step **2**.

GET-THE-MANUALS.org

Step		Check	Yes	No
2	**CHECK EGR CONTROL VALVE.** Measure the resistance between EGR control valve terminals. ***Terminals*** ***DTC P1493; No. 2 — No. 3:*** ***DTC P1495; No. 2 — No. 1:*** ***DTC P1497; No. 5 — No. 4:*** ***DTC P1499; No. 5 — No. 6:***	Is the resistance 20 Ω or more?	Repair the poor contact of ECM connector.	Replace EGR control valve. <Ref. to FU(H6DO)-42, EGR Valve.>

GETthemMANUALS.org

EQ:DTC P1518 STARTER SWITCH CIRCUIT LOW INPUT

DTC DETECTING CONDITION:

- Immediately at fault recognition
- GENERAL DESCRIPTION <Ref. to GD(H6DO)-222, DTC P1518 STARTER SWITCH CIRCUIT LOW INPUT, Diagnostic Trouble Code (DTC) Detecting Criteria.>

TROUBLE SYMPTOM:

Failure of engine to start

CAUTION:

After servicing or replacing faulty parts, perform Clear Memory Mode <Ref. to EN(H6DO)(diag)-57, OPERATION, Clear Memory Mode.>, and Inspection Mode <Ref. to EN(H6DO)(diag)-44, PROCEDURE, Inspection Mode.>.

WIRING DIAGRAM:

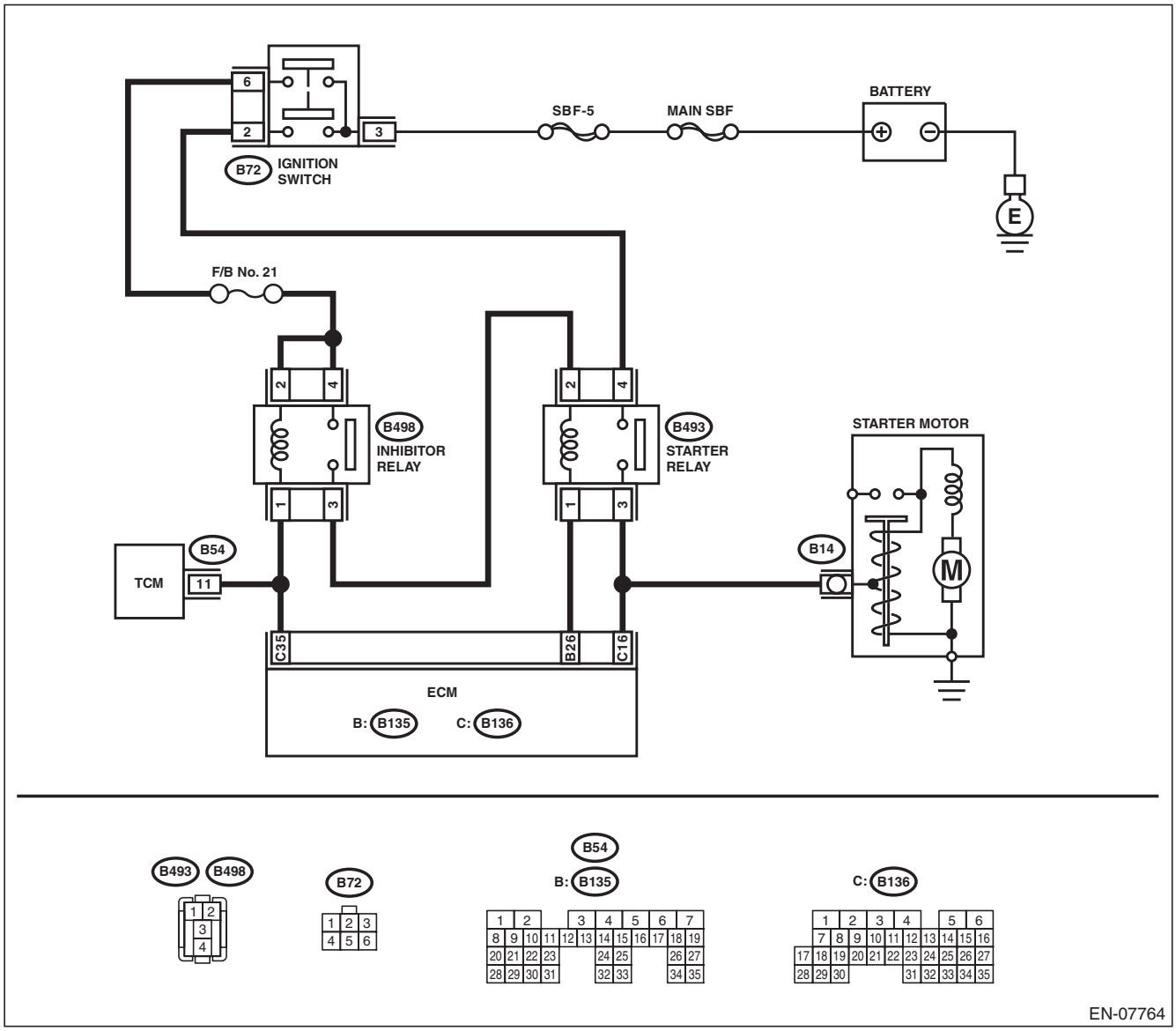

GETtheMANUALS.org

	Step	Check	Yes	No
1	**CHECK FOR ANY OTHER DTC ON DISPLAY.**	Is any other DTC displayed?	Check DTC using "List of Diagnostic Trouble Code (DTC)". <Ref. to EN(H6DO)(diag)-85, List of Diagnostic Trouble Code (DTC).>	Go to step **2**.
2	**CHECK HARNESS BETWEEN ECM AND STARTER RELAY CONNECTOR.** 1) Turn the ignition switch to OFF. 2) Remove the starter relay. 3) Disconnect the connectors from ECM and starter motor. 4) Measure the resistance of harness between ECM and starter relay connector. ***Connector & terminal*** ***(B136) No. 16 — (B493) No. 3:***	Is the resistance less than 1 Ω?	Go to step **3**.	Repair the open circuit of harness between ECM and starter relay connector.
3	**CHECK HARNESS BETWEEN ECM AND STARTER RELAY CONNECTOR.** Measure the resistance between ECM and chassis ground. ***Connector & terminal*** ***(B136) No. 16 — Chassis ground:***	Is the resistance 1 MΩ or more?	Repair the poor contact of ECM connector.	Repair the short circuit to ground in harness between ECM and starter relay connector.

GETthemMANUALS.org

ER:DTC P1560 BACK-UP VOLTAGE CIRCUIT MALFUNCTION

DTC DETECTING CONDITION:

- Immediately at fault recognition
- GENERAL DESCRIPTION <Ref. to GD(H6DO)-223, DTC P1560 BACK-UP VOLTAGE CIRCUIT MALFUNCTION, Diagnostic Trouble Code (DTC) Detecting Criteria.>

CAUTION:

After servicing or replacing faulty parts, perform Clear Memory Mode <Ref. to EN(H6DO)(diag)-57, OPERATION, Clear Memory Mode.>, and Inspection Mode <Ref. to EN(H6DO)(diag)-44, PROCEDURE, Inspection Mode.>.

WIRING DIAGRAM:

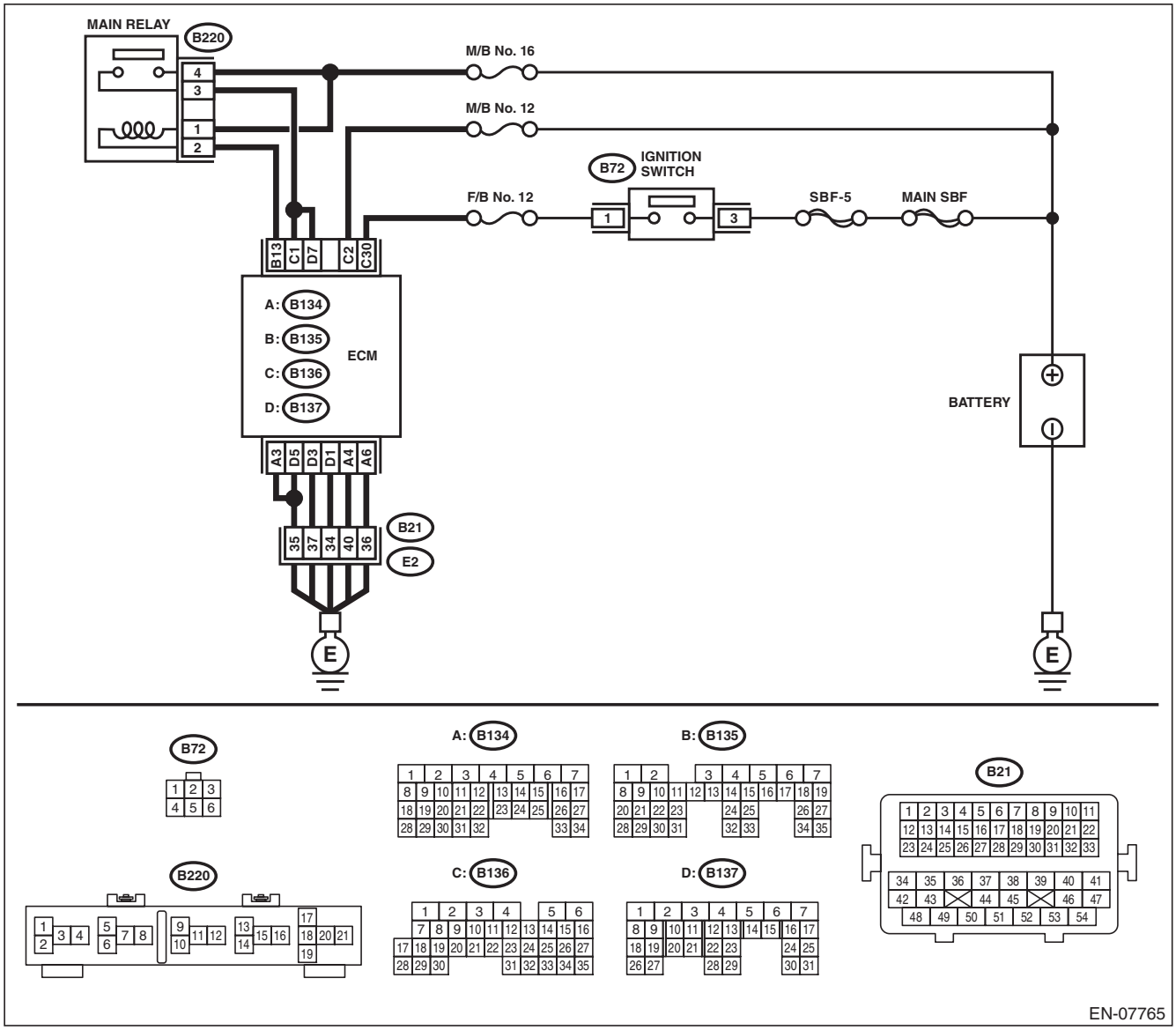

Step	Check	Yes	No
1 **CHECK INPUT SIGNAL OF ECM.** 1) Turn the ignition switch to OFF. 2) Measure the voltage between ECM and chassis ground. ***Connector & terminal*** ***(B136) No. 2 (+) — Chassis ground (–):***	Is the voltage 10 V or more?	Repair the poor contact of ECM connector.	Go to step **2**.

GETTHEMANUALS.org

Step		Check	Yes	No
2	**CHECK HARNESS BETWEEN ECM AND MAIN FUSE BOX CONNECTOR.** 1) Disconnect the connector from ECM. 2) Measure the resistance between ECM and chassis ground. ***Connector & terminal*** ***(B136) No. 2 — Chassis ground:***	Is the resistance 1 MΩ or more?	Go to step **3**.	Repair the ground short circuit of harness between ECM and battery terminal.
3	**CHECK M/B FUSE NO. 12.**	Is the fuse blown out?	Replace the fuse.	Repair the harness and connector. NOTE: In this case, repair the following item: • Open circuit in harness between ECM and battery • Poor contact of ECM connector • Poor contact of battery terminal

GETTHEMANUALS.org

ES:DTC P2088 INTAKE CAMSHAFT POSITION ACTUATOR CONTROL CIRCUIT LOW (BANK 1)

DTC DETECTING CONDITION:

- Immediately at fault recognition
- GENERAL DESCRIPTION <Ref. to GD(H6DO)-225, DTC P2088 INTAKE CAMSHAFT POSITION ACTUATOR CONTROL CIRCUIT LOW (BANK 1), Diagnostic Trouble Code (DTC) Detecting Criteria.>

TROUBLE SYMPTOM:

Improper idling

CAUTION:

After servicing or replacing faulty parts, perform Clear Memory Mode <Ref. to EN(H6DO)(diag)-57, OPERATION, Clear Memory Mode.>, and Inspection Mode <Ref. to EN(H6DO)(diag)-44, PROCEDURE, Inspection Mode.>.

WIRING DIAGRAM:

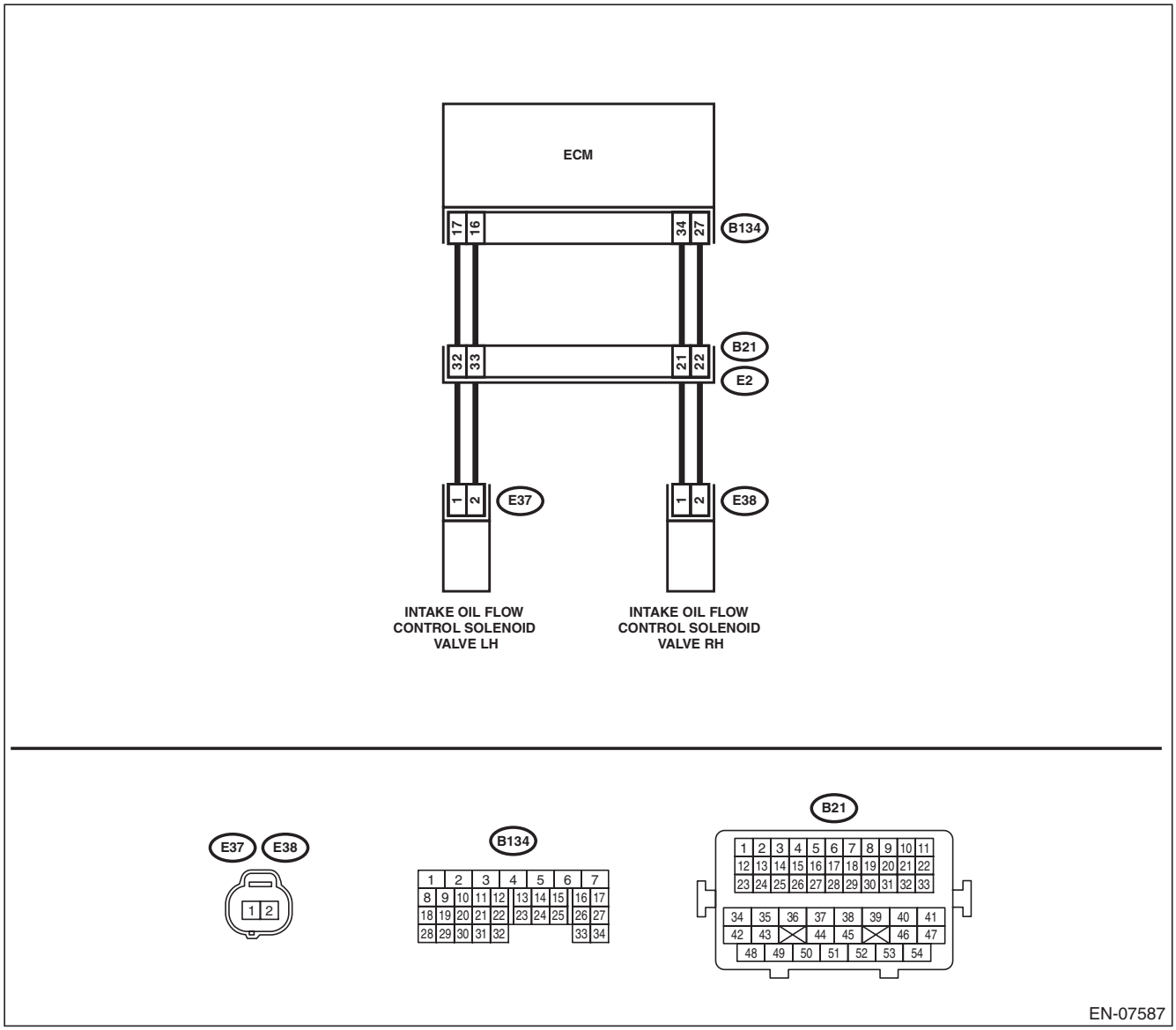

GETtheMANUALS.org

	Step	Check	Yes	No
1	**CHECK HARNESS BETWEEN ECM AND OIL FLOW CONTROL SOLENOID VALVE RH CONNECTOR.** 1) Turn the ignition switch to OFF. 2) Disconnect the connectors from ECM and oil flow control solenoid valve RH. 3) Measure the resistance of harness between ECM and oil flow control solenoid valve RH connector. ***Connector & terminal*** ***(B134) No. 34 — (E38) No. 1:*** ***(B134) No. 27 — (E38) No. 2:***	Is the resistance less than 1 Ω?	Go to step **2**.	Repair the harness and connector. NOTE: In this case, repair the following item: • Open circuit in harness between ECM and oil flow control solenoid valve RH connector • Poor contact of coupling connector
2	**CHECK HARNESS BETWEEN ECM AND OIL FLOW CONTROL SOLENOID VALVE RH CONNECTOR.** Measure the resistance between ECM and chassis ground. ***Connector & terminal*** ***(B134) No. 34 — Chassis ground:*** ***(B134) No. 27 — Chassis ground:***	Is the resistance 1 MΩ or more?	Go to step **3**.	Repair the short circuit to ground in harness between ECM and oil flow control solenoid valve RH connector.
3	**CHECK OIL FLOW CONTROL SOLENOID VALVE.** Measure the resistance between oil flow control solenoid valve terminals. ***Terminals*** ***No. 1 — No. 2:***	Is the resistance 6 — 12 Ω?	Repair the poor contact of ECM and oil flow control solenoid valve RH connector RH.	Replace the oil flow control solenoid valve RH. <Ref. to FU(H6DO)-47, Oil Flow Control Solenoid Valve.>

GETTHEMANUALS.org

ET:DTC P2089 INTAKE CAMSHAFT POSITION ACTUATOR CONTROL CIRCUIT HIGH (BANK 1)

DTC DETECTING CONDITION:

- Immediately at fault recognition
- GENERAL DESCRIPTION <Ref. to GD(H6DO)-226, DTC P2089 INTAKE CAMSHAFT POSITION ACTUATOR CONTROL CIRCUIT HIGH (BANK 1), Diagnostic Trouble Code (DTC) Detecting Criteria.>

TROUBLE SYMPTOM:

Improper idling

CAUTION:

After servicing or replacing faulty parts, perform Clear Memory Mode <Ref. to EN(H6DO)(diag)-57, OPERATION, Clear Memory Mode.>, and Inspection Mode <Ref. to EN(H6DO)(diag)-44, PROCEDURE, Inspection Mode.>.

WIRING DIAGRAM:

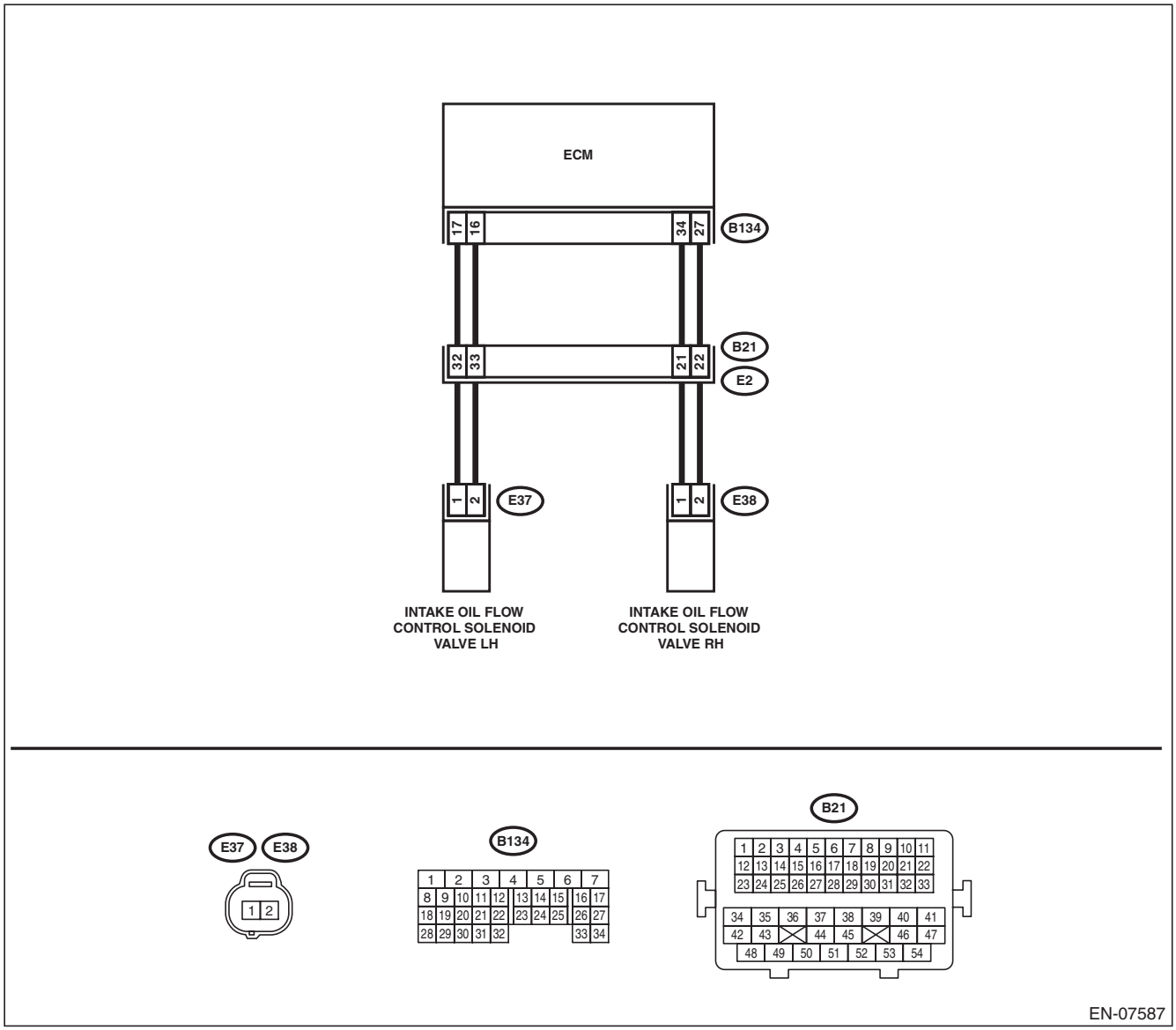

GETtheMANUALS.org

	Step	Check	Yes	No
1	**CHECK HARNESS BETWEEN ECM AND OIL FLOW CONTROL SOLENOID VALVE RH CONNECTOR.** 1) Turn the ignition switch to OFF. 2) Disconnect the connectors from ECM and oil flow control solenoid valve RH. 3) Measure the voltage between ECM and chassis ground. ***Connector & terminal*** ***(B134) No. 34 (+) — Chassis ground (–):*** ***(B134) No. 27 (+) — Chassis ground (–):***	Is the voltage less than 1 V?	Go to step **2**.	Repair the short circuit to power supply in harness between ECM and oil flow control solenoid valve RH connector.
2	**CHECK HARNESS BETWEEN ECM AND OIL FLOW CONTROL SOLENOID VALVE RH CONNECTOR.** Measure the resistance of harness between ECM and oil flow control solenoid valve RH connector. ***Connector & terminal*** ***(B134) No. 34 — (E38) No. 1:*** ***(B134) No. 27 — (E38) No. 2:***	Is the resistance less than 1 Ω?	Go to step **3**.	Repair the harness and connector. NOTE: In this case, repair the following item: • Open circuit in harness between ECM and oil flow control solenoid valve RH connector • Poor contact of coupling connector
3	**CHECK OIL FLOW CONTROL SOLENOID VALVE.** Measure the resistance between oil flow control solenoid valve terminals. ***Terminals*** ***No. 1 — No. 2:***	Is the resistance 6 — 12 Ω?	Repair the poor contact of ECM and oil flow control solenoid valve RH connector RH.	Replace the oil flow control solenoid valve RH. <Ref. to FU(H6DO)-47, Oil Flow Control Solenoid Valve.>

GETTHEMANUALS.org

EU:DTC P2090 EXHAUST CAMSHAFT POSITION ACTUATOR CONTROL CIRCUIT LOW (BANK 1)

DTC DETECTING CONDITION:

- Immediately at fault recognition
- GENERAL DESCRIPTION <Ref. to GD(H6DO)-227, DTC P2090 EXHAUST CAMSHAFT POSITION ACTUATOR CONTROL CIRCUIT LOW (BANK 1), Diagnostic Trouble Code (DTC) Detecting Criteria.>

TROUBLE SYMPTOM:

Improper idling

CAUTION:

After repair or replacement of faulty parts, perform Clear Memory Mode <Ref. to EN(H6DO)(diag)-57, OPERATION, Clear Memory Mode.>, and Inspection Mode <Ref. to EN(H6DO)(diag)-44, PROCEDURE, Inspection Mode.>.

WIRING DIAGRAM:

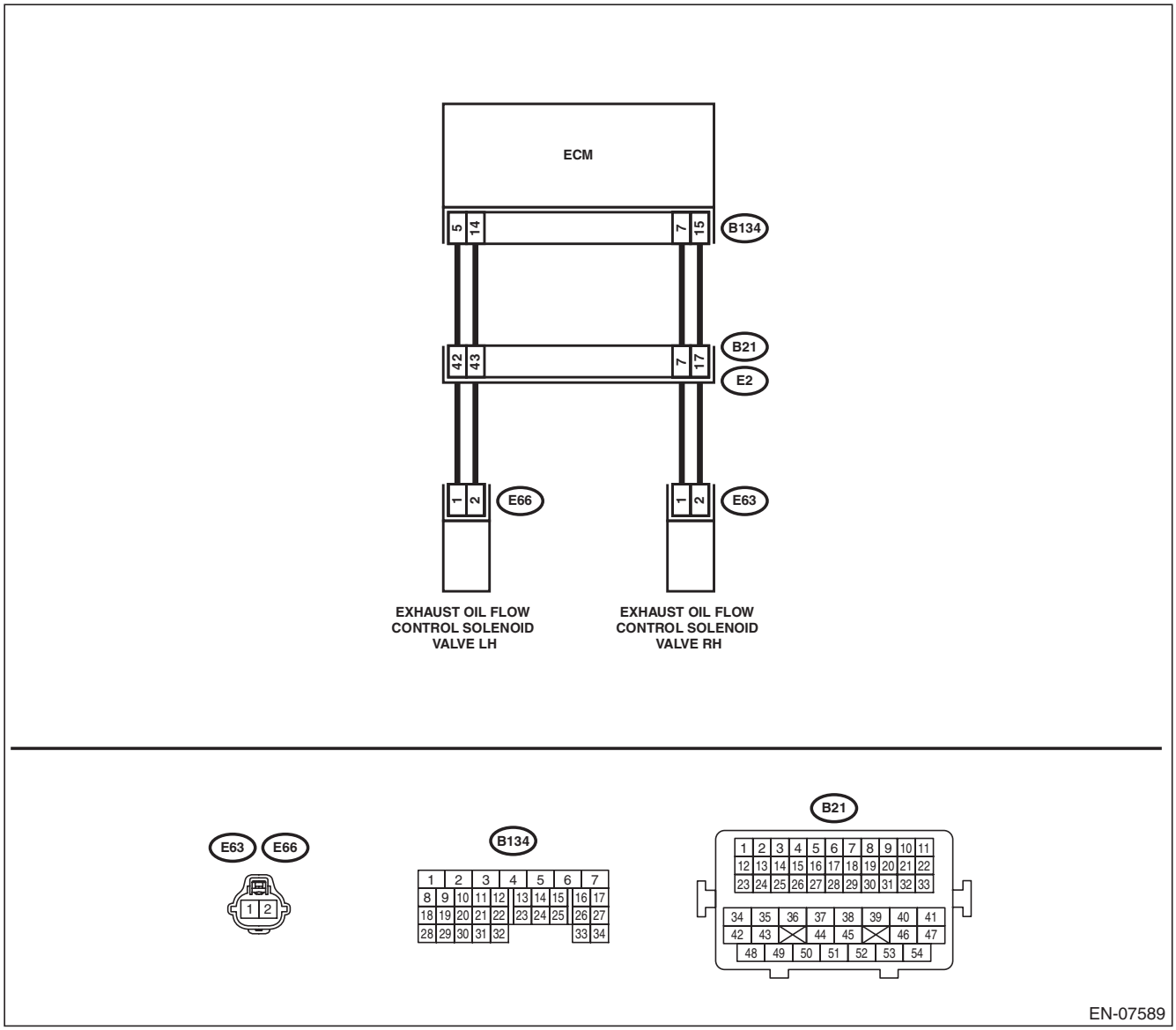

GETTHEMANUALS.org

	Step	Check	Yes	No
1	**CHECK HARNESS BETWEEN ECM AND OIL FLOW CONTROL SOLENOID VALVE RH CONNECTOR.** 1) Turn the ignition switch to OFF. 2) Disconnect the connectors from ECM and oil flow control solenoid valve RH. 3) Measure the resistance of harness between ECM and oil flow control solenoid valve RH connector. ***Connector & terminal*** ***(B134) No. 7 — (E63) No. 1:*** ***(B134) No. 15 — (E63) No. 2:***	Is the resistance less than 1 Ω?	Go to step **2**.	Repair the harness and connector. NOTE: In this case, repair the following item: • Open circuit in harness between ECM and oil flow control solenoid valve RH connector • Poor contact of coupling connector
2	**CHECK HARNESS BETWEEN ECM AND OIL FLOW CONTROL SOLENOID VALVE RH CONNECTOR.** Measure the resistance between ECM and chassis ground. ***Connector & terminal*** ***(B134) No. 7 — Chassis ground:*** ***(B134) No. 15 — Chassis ground:***	Is the resistance 1 MΩ or more?	Go to step **3**.	Repair the short circuit to ground in harness between ECM and oil flow control solenoid valve RH connector.
3	**CHECK OIL FLOW CONTROL SOLENOID VALVE.** Measure the resistance between oil flow control solenoid valve terminals. ***Terminals*** ***No. 1 — No. 2:***	Is the resistance 6 — 12 Ω?	Repair the poor contact of ECM and oil flow control solenoid valve RH connector RH.	Replace the oil flow control solenoid valve RH. <Ref. to FU(H6DO)-47, Oil Flow Control Solenoid Valve.>

GETTHEMANUALS.org

EV:DTC P2091 EXHAUST CAMSHAFT POSITION ACTUATOR CONTROL CIRCUIT HIGH (BANK 1)

DTC DETECTING CONDITION:

- Immediately at fault recognition
- GENERAL DESCRIPTION <Ref. to GD(H6DO)-228, DTC P2091 EXHAUST CAMSHAFT POSITION ACTUATOR CONTROL CIRCUIT HIGH (BANK 1), Diagnostic Trouble Code (DTC) Detecting Criteria.>

TROUBLE SYMPTOM:

Improper idling

CAUTION:

After repair or replacement of faulty parts, perform Clear Memory Mode <Ref. to EN(H6DO)(diag)-57, OPERATION, Clear Memory Mode.>, and Inspection Mode <Ref. to EN(H6DO)(diag)-44, PROCEDURE, Inspection Mode.>.

WIRING DIAGRAM:

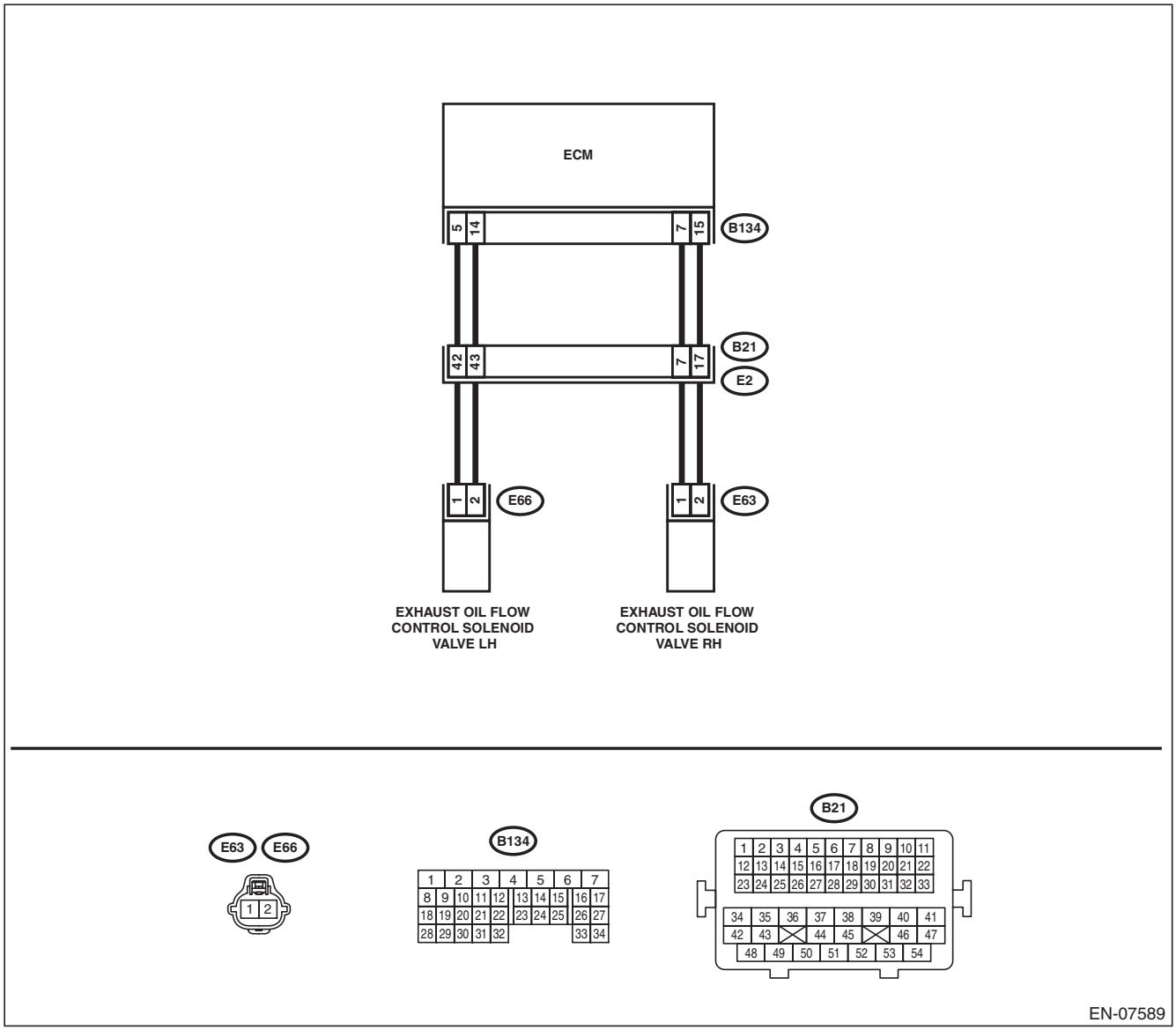

GETTHEMANUALS.org

	Step	Check	Yes	No
1	**CHECK HARNESS BETWEEN ECM AND OIL FLOW CONTROL SOLENOID VALVE RH CONNECTOR.** 1) Turn the ignition switch to OFF. 2) Disconnect the connectors from ECM and oil flow control solenoid valve RH. 3) Measure the voltage between ECM and chassis ground. ***Connector & terminal*** ***(B134) No. 7 (+) — Chassis ground (–):*** ***(B134) No. 15 (+) — Chassis ground (–):***	Is the voltage less than 1 V?	Go to step **2**.	Repair the short circuit to power supply in harness between ECM and oil flow control solenoid valve RH connector.
2	**CHECK HARNESS BETWEEN ECM AND OIL FLOW CONTROL SOLENOID VALVE RH CONNECTOR.** Measure the resistance of harness between ECM and oil flow control solenoid valve RH connector. ***Connector & terminal*** ***(B134) No. 7 — (E63) No. 1:*** ***(B134) No. 15 — (E63) No. 2:***	Is the resistance less than 1 Ω?	Go to step **3**.	Repair the harness and connector. NOTE: In this case, repair the following item: • Open circuit in harness between ECM and oil flow control solenoid valve RH connector • Poor contact of coupling connector
3	**CHECK OIL FLOW CONTROL SOLENOID VALVE.** Measure the resistance between oil flow control solenoid valve terminals. ***Terminals*** ***No. 1 — No. 2:***	Is the resistance 6 — 12 Ω?	Repair the poor contact of ECM and oil flow control solenoid valve RH connector RH.	Replace the oil flow control solenoid valve RH. <Ref. to FU(H6DO)-47, Oil Flow Control Solenoid Valve.>

GETTHEMANUALS.org

EW:DTC P2092 INTAKE CAMSHAFT POSITION ACTUATOR CONTROL CIRCUIT LOW (BANK 2)

DTC DETECTING CONDITION:

- Immediately at fault recognition
- GENERAL DESCRIPTION <Ref. to GD(H6DO)-229, DTC P2092 INTAKE CAMSHAFT POSITION ACTUATOR CONTROL CIRCUIT LOW (BANK 2), Diagnostic Trouble Code (DTC) Detecting Criteria.>

TROUBLE SYMPTOM:

Improper idling

CAUTION:

After servicing or replacing faulty parts, perform Clear Memory Mode <Ref. to EN(H6DO)(diag)-57, OPERATION, Clear Memory Mode.>, and Inspection Mode <Ref. to EN(H6DO)(diag)-44, PROCEDURE, Inspection Mode.>.

WIRING DIAGRAM:

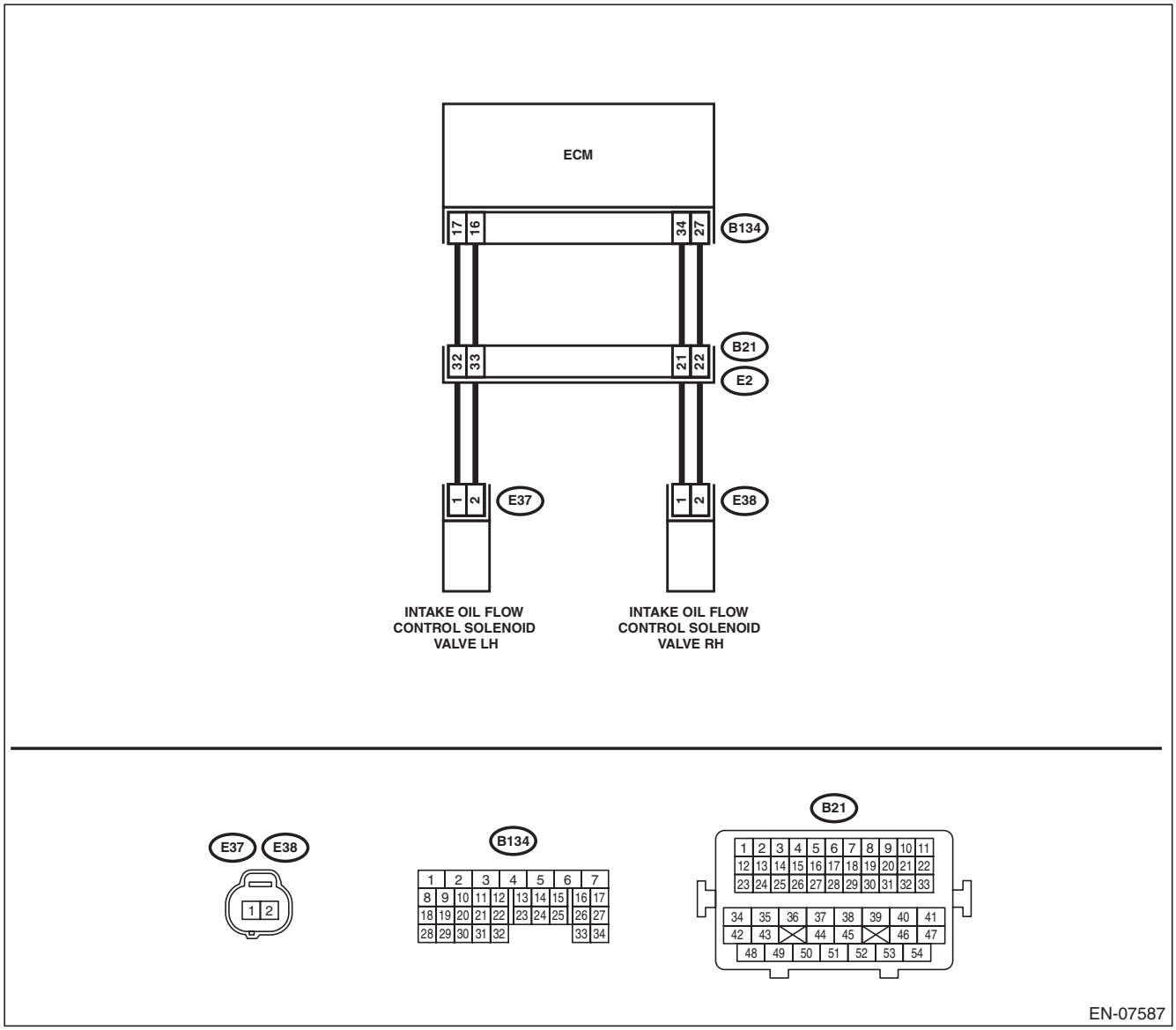

GETTHEMANUALS.org

	Step	Check	Yes	No
1	**CHECK HARNESS BETWEEN ECM AND OIL FLOW CONTROL SOLENOID VALVE LH CONNECTOR.** 1) Turn the ignition switch to OFF. 2) Disconnect the connectors from ECM and oil flow control solenoid valve LH. 3) Measure the resistance of harness between ECM and oil flow control solenoid valve LH connector. ***Connector & terminal*** ***(B134) No. 17 — (E37) No. 1:*** ***(B134) No. 16 — (E37) No. 2:***	Is the resistance less than 1 Ω?	Go to step **2**.	Repair the harness and connector. NOTE: In this case, repair the following item: • Open circuit in harness between ECM and oil flow control solenoid valve RH connector • Poor contact of coupling connector
2	**CHECK HARNESS BETWEEN ECM AND OIL FLOW CONTROL SOLENOID VALVE LH CONNECTOR.** Measure the resistance between ECM and chassis ground. ***Connector & terminal*** ***(B134) No. 17 — Chassis ground:*** ***(B134) No. 16 — Chassis ground:***	Is the resistance 1 MΩ or more?	Go to step **3**.	Repair the short circuit to ground in harness between ECM and oil flow control solenoid valve LH connector.
3	**CHECK OIL FLOW CONTROL SOLENOID VALVE.** Measure the resistance between oil flow control solenoid valve terminals. ***Terminals*** ***No. 1 — No. 2:***	Is the resistance 6 — 12 Ω?	Repair the poor contact of ECM and oil flow control solenoid valve LH connector.	Replace the oil flow control solenoid valve LH. <Ref. to FU(H6DO)-47, Oil Flow Control Solenoid Valve.>

GETTHEMANUALS.org

EX:DTC P2093 INTAKE CAMSHAFT POSITION ACTUATOR CONTROL CIRCUIT HIGH (BANK 2)

DTC DETECTING CONDITION:

- Immediately at fault recognition
- GENERAL DESCRIPTION <Ref. to GD(H6DO)-229, DTC P2093 INTAKE CAMSHAFT POSITION ACTUATOR CONTROL CIRCUIT HIGH (BANK 2), Diagnostic Trouble Code (DTC) Detecting Criteria.>

TROUBLE SYMPTOM:

Improper idling

CAUTION:

After servicing or replacing faulty parts, perform Clear Memory Mode <Ref. to EN(H6DO)(diag)-57, OPERATION, Clear Memory Mode.>, and Inspection Mode <Ref. to EN(H6DO)(diag)-44, PROCEDURE, Inspection Mode.>.

WIRING DIAGRAM:

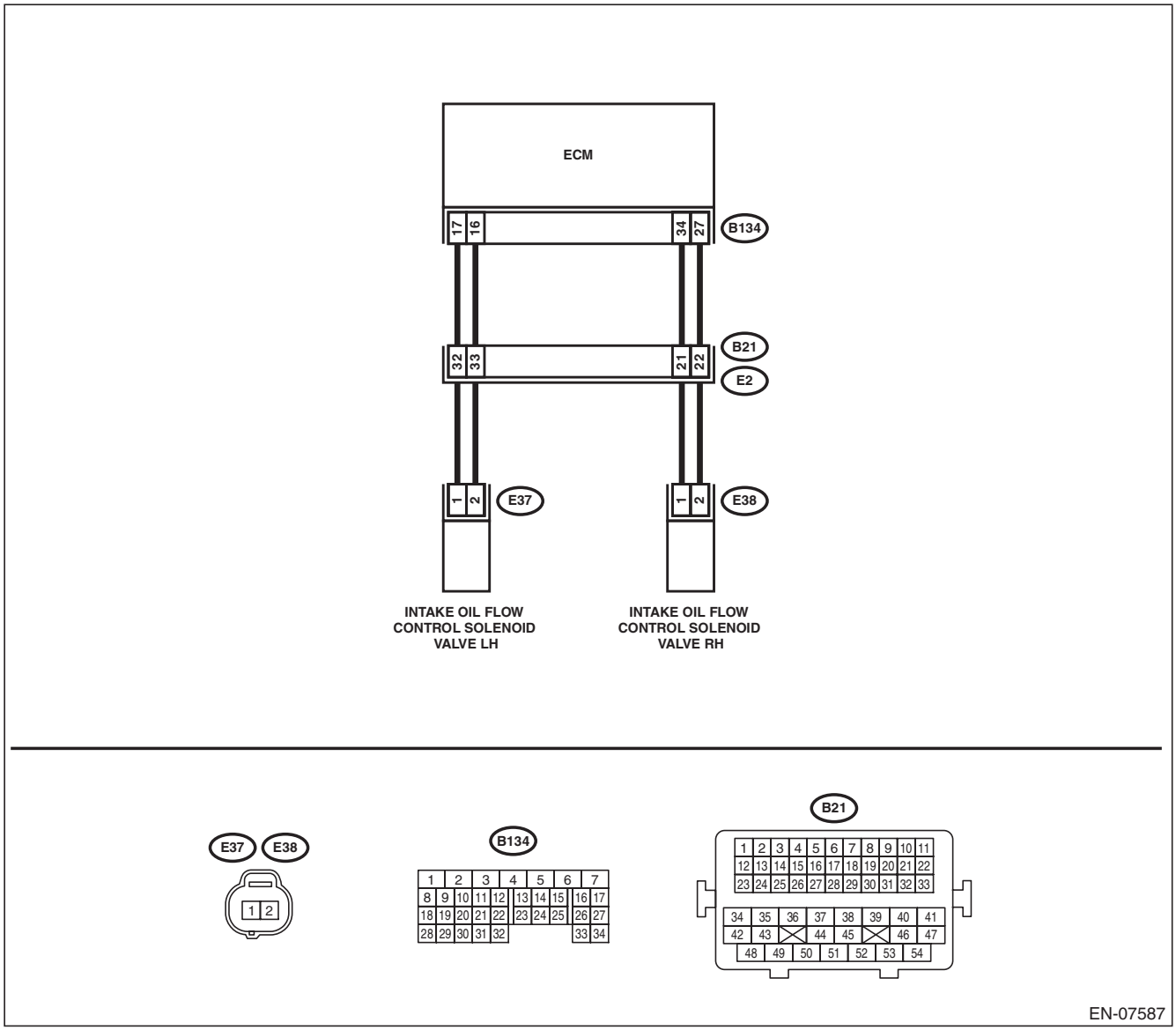

GETTHEMANUALS.org

	Step	Check	Yes	No
1	**CHECK HARNESS BETWEEN ECM AND OIL FLOW CONTROL SOLENOID VALVE LH CONNECTOR.** 1) Turn the ignition switch to OFF. 2) Disconnect the connectors from ECM and oil flow control solenoid valve LH. 3) Measure the voltage between ECM and chassis ground. ***Connector & terminal*** ***(B134) No. 17 (+) — Chassis ground (–):*** ***(B134) No. 16 (+) — Chassis ground (–):***	Is the voltage less than 1 V?	Go to step **2**.	Repair the short circuit to power supply in harness between ECM and oil flow control solenoid valve LH connector.
2	**CHECK HARNESS BETWEEN ECM AND OIL FLOW CONTROL SOLENOID VALVE LH CONNECTOR.** Measure the resistance of harness between ECM and oil flow control solenoid valve LH connector. ***Connector & terminal*** ***(B134) No. 17 — (E37) No. 1:*** ***(B134) No. 16 — (E37) No. 2:***	Is the resistance less than 1 Ω?	Go to step **3**.	Repair the harness and connector. NOTE: In this case, repair the following item: • Open circuit in harness between ECM and oil flow control solenoid valve RH connector • Poor contact of coupling connector
3	**CHECK OIL FLOW CONTROL SOLENOID VALVE.** Measure the resistance between oil flow control solenoid valve terminals. ***Terminals*** ***No. 1 — No. 2:***	Is the resistance 6 — 12 Ω?	Repair the poor contact of ECM and oil flow control solenoid valve LH connector.	Replace the oil flow control solenoid valve LH. <Ref. to FU(H6DO)-47, Oil Flow Control Solenoid Valve.>

GETTHEMANUALS.org

EY:DTC P2094 EXHAUST CAMSHAFT POSITION ACTUATOR CONTROL CIRCUIT LOW (BANK 2)

DTC DETECTING CONDITION:

- Immediately at fault recognition
- GENERAL DESCRIPTION <Ref. to GD(H6DO)-229, DTC P2094 EXHAUST CAMSHAFT POSITION ACTUATOR CONTROL CIRCUIT LOW (BANK 2), Diagnostic Trouble Code (DTC) Detecting Criteria.>

TROUBLE SYMPTOM:

Improper idling

CAUTION:

After repair or replacement of faulty parts, perform Clear Memory Mode <Ref. to EN(H6DO)(diag)-57, OPERATION, Clear Memory Mode.>, and Inspection Mode <Ref. to EN(H6DO)(diag)-44, PROCEDURE, Inspection Mode.>.

WIRING DIAGRAM:

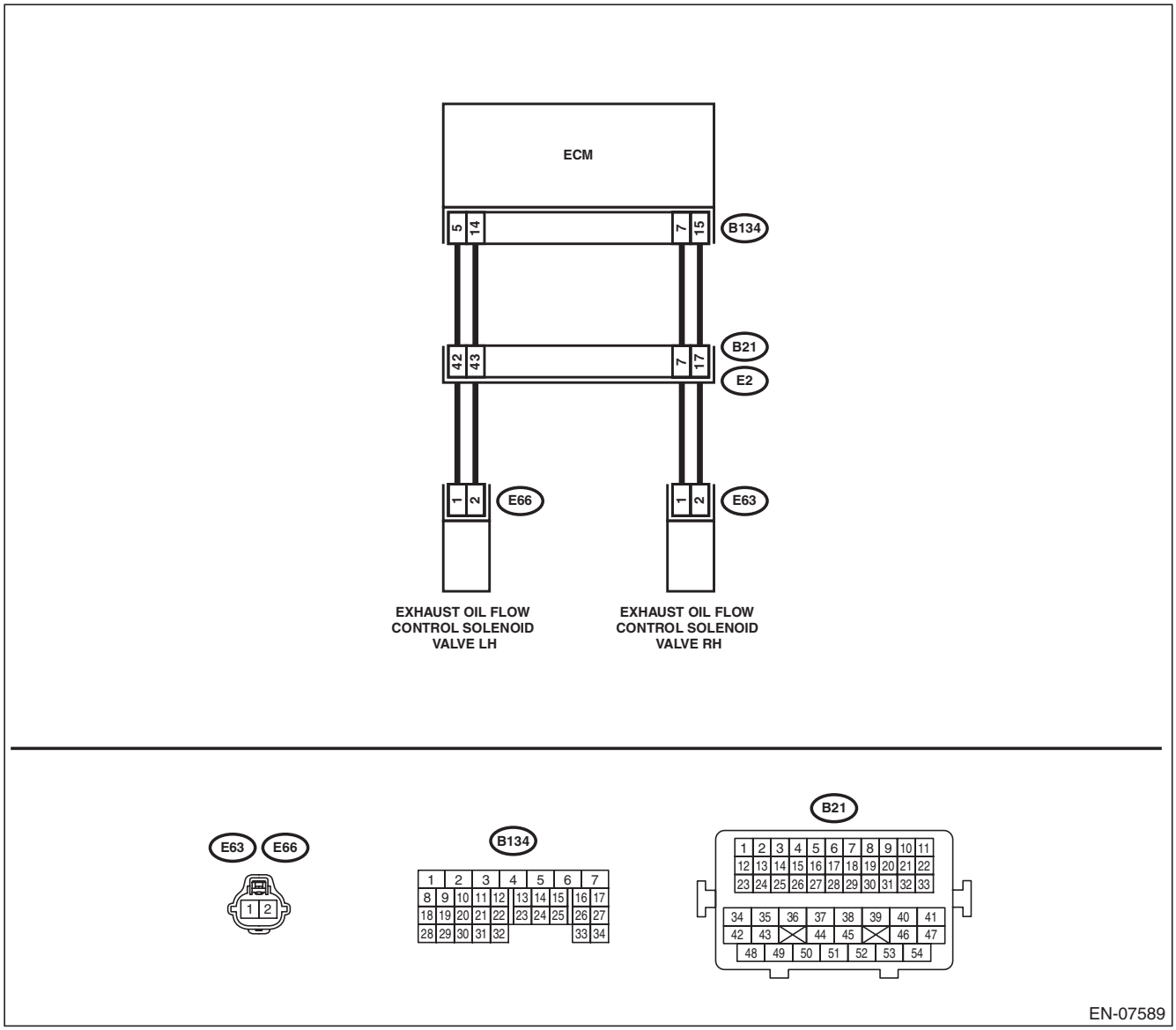

GETTHEMANUALS.org

	Step	Check	Yes	No
1	**CHECK HARNESS BETWEEN ECM AND OIL FLOW CONTROL SOLENOID VALVE LH CONNECTOR.** 1) Turn the ignition switch to OFF. 2) Disconnect the connectors from ECM and oil flow control solenoid valve LH. 3) Measure the resistance of harness between ECM and oil flow control solenoid valve LH connector. ***Connector & terminal*** ***(B134) No. 5 — (E66) No. 1:*** ***(B134) No. 14 — (E66) No. 2:***	Is the resistance less than 1 Ω?	Go to step **2**.	Repair the harness and connector. NOTE: In this case, repair the following item: • Open circuit in harness between ECM and oil flow control solenoid valve RH connector • Poor contact of coupling connector
2	**CHECK HARNESS BETWEEN ECM AND OIL FLOW CONTROL SOLENOID VALVE LH CONNECTOR.** Measure the resistance between ECM and chassis ground. ***Connector & terminal*** ***(B134) No. 5 — Chassis ground:*** ***(B134) No. 14 — Chassis ground:***	Is the resistance 1 MΩ or more?	Go to step **3**.	Repair the short circuit to ground in harness between ECM and oil flow control solenoid valve LH connector.
3	**CHECK OIL FLOW CONTROL SOLENOID VALVE.** Measure the resistance between oil flow control solenoid valve terminals. ***Terminals*** ***No. 1 — No. 2:***	Is the resistance 6 — 12 Ω?	Repair the poor contact of ECM and oil flow control solenoid valve LH connector.	Replace the oil flow control solenoid valve LH. <Ref. to FU(H6DO)-47, Oil Flow Control Solenoid Valve.>

GETtheMANUALS.org

EZ:DTC P2095 EXHAUST CAMSHAFT POSITION ACTUATOR CONTROL CIRCUIT HIGH (BANK 2)

DTC DETECTING CONDITION:

- Immediately at fault recognition
- GENERAL DESCRIPTION <Ref. to GD(H6DO)-229, DTC P2095 EXHAUST CAMSHAFT POSITION ACTUATOR CONTROL CIRCUIT HIGH (BANK 2), Diagnostic Trouble Code (DTC) Detecting Criteria.>

TROUBLE SYMPTOM:

Improper idling

CAUTION:

After repair or replacement of faulty parts, perform Clear Memory Mode <Ref. to EN(H6DO)(diag)-57, OPERATION, Clear Memory Mode.>, and Inspection Mode <Ref. to EN(H6DO)(diag)-44, PROCEDURE, Inspection Mode.>.

WIRING DIAGRAM:

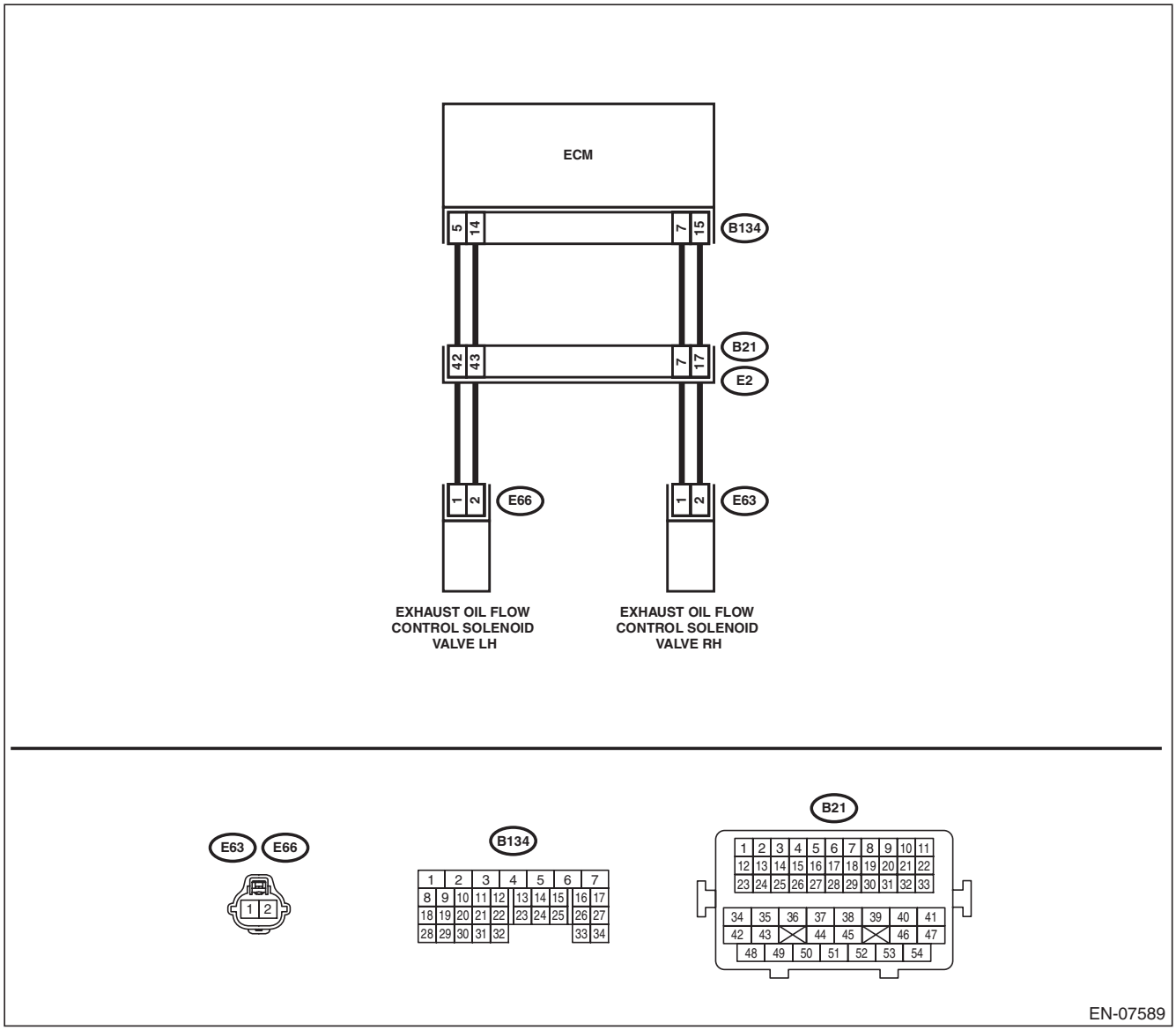

GETTHEMANUALS.org

	Step	Check	Yes	No
1	**CHECK HARNESS BETWEEN ECM AND OIL FLOW CONTROL SOLENOID VALVE LH CONNECTOR.** 1) Turn the ignition switch to OFF. 2) Disconnect the connectors from ECM and oil flow control solenoid valve LH. 3) Measure the voltage between ECM and chassis ground. ***Connector & terminal*** ***(B134) No. 5 (+) — Chassis ground (–):*** ***(B134) No. 14 (+) — Chassis ground (–):***	Is the voltage less than 1 V?	Go to step **2**.	Repair the short circuit to power supply in harness between ECM and oil flow control solenoid valve LH connector.
2	**CHECK HARNESS BETWEEN ECM AND OIL FLOW CONTROL SOLENOID VALVE LH CONNECTOR.** Measure the resistance of harness between ECM and oil flow control solenoid valve LH connector. ***Connector & terminal*** ***(B134) No. 5 — (E66) No. 1:*** ***(B134) No. 14 — (E66) No. 2:***	Is the resistance less than 1 Ω?	Go to step **3**.	Repair the harness and connector. NOTE: In this case, repair the following item: • Open circuit in harness between ECM and oil flow control solenoid valve RH connector • Poor contact of coupling connector
3	**CHECK OIL FLOW CONTROL SOLENOID VALVE.** Measure the resistance between oil flow control solenoid valve terminals. ***Terminals*** ***No. 1 — No. 2:***	Is the resistance 6 — 12 Ω?	Repair the poor contact of ECM and oil flow control solenoid valve LH connector.	Replace the oil flow control solenoid valve LH. <Ref. to FU(H6DO)-47, Oil Flow Control Solenoid Valve.>

GETTHEMANUALS.org

FA:DTC P2096 POST CATALYST FUEL TRIM SYSTEM TOO LEAN (BANK 1)

DTC DETECTING CONDITION:

- Detected when two consecutive driving cycles with fault occur.
- GENERAL DESCRIPTION <Ref. to GD(H6DO)-230, DTC P2096 POST CATALYST FUEL TRIM SYSTEM TOO LEAN (BANK 1), Diagnostic Trouble Code (DTC) Detecting Criteria.>

CAUTION:

After servicing or replacing faulty parts, perform Clear Memory Mode <Ref. to EN(H6DO)(diag)-57, OPERATION, Clear Memory Mode.>, and Inspection Mode <Ref. to EN(H6DO)(diag)-44, PROCEDURE, Inspection Mode.>.

WIRING DIAGRAM:

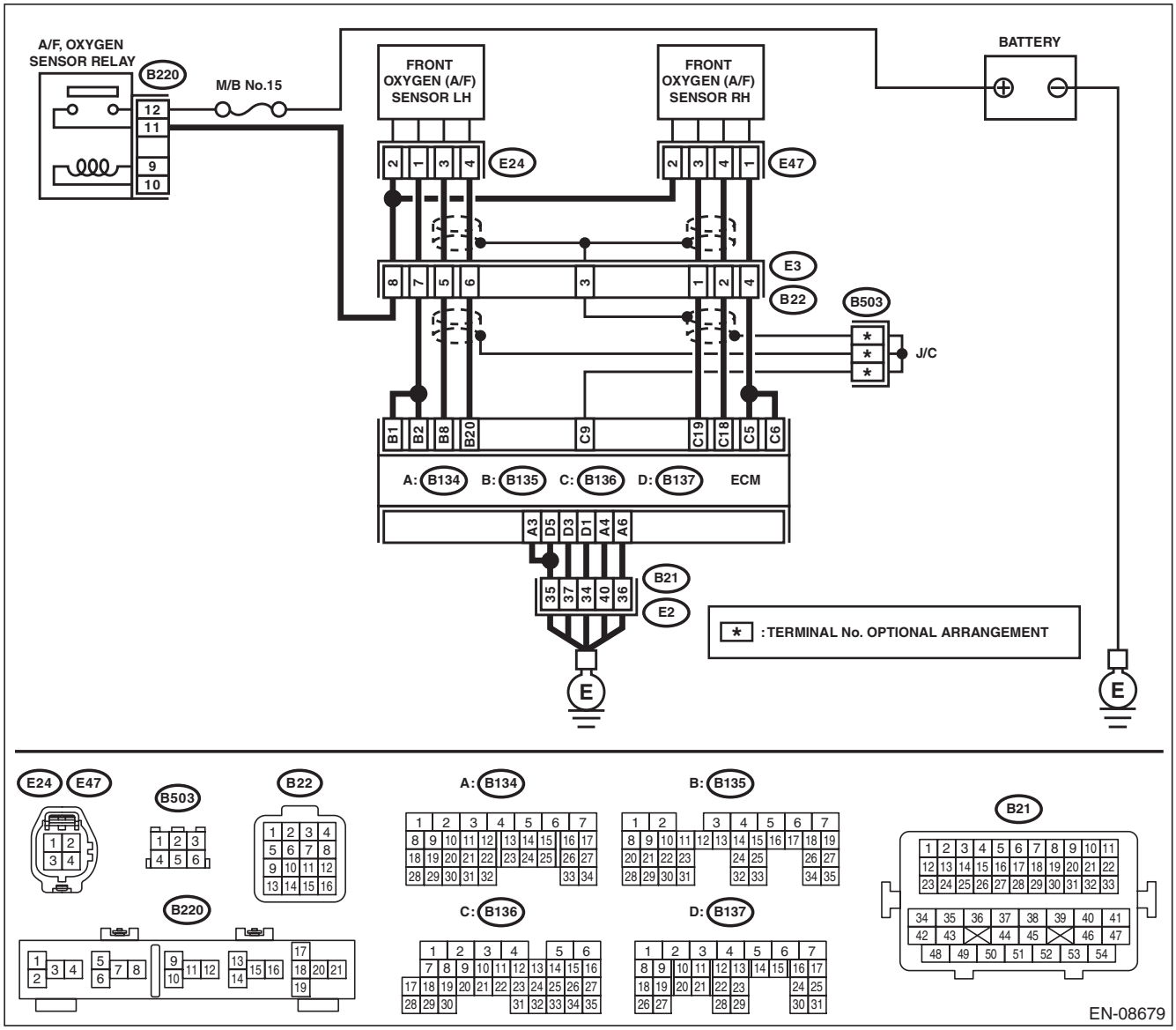

GETTHEMANUALS.org

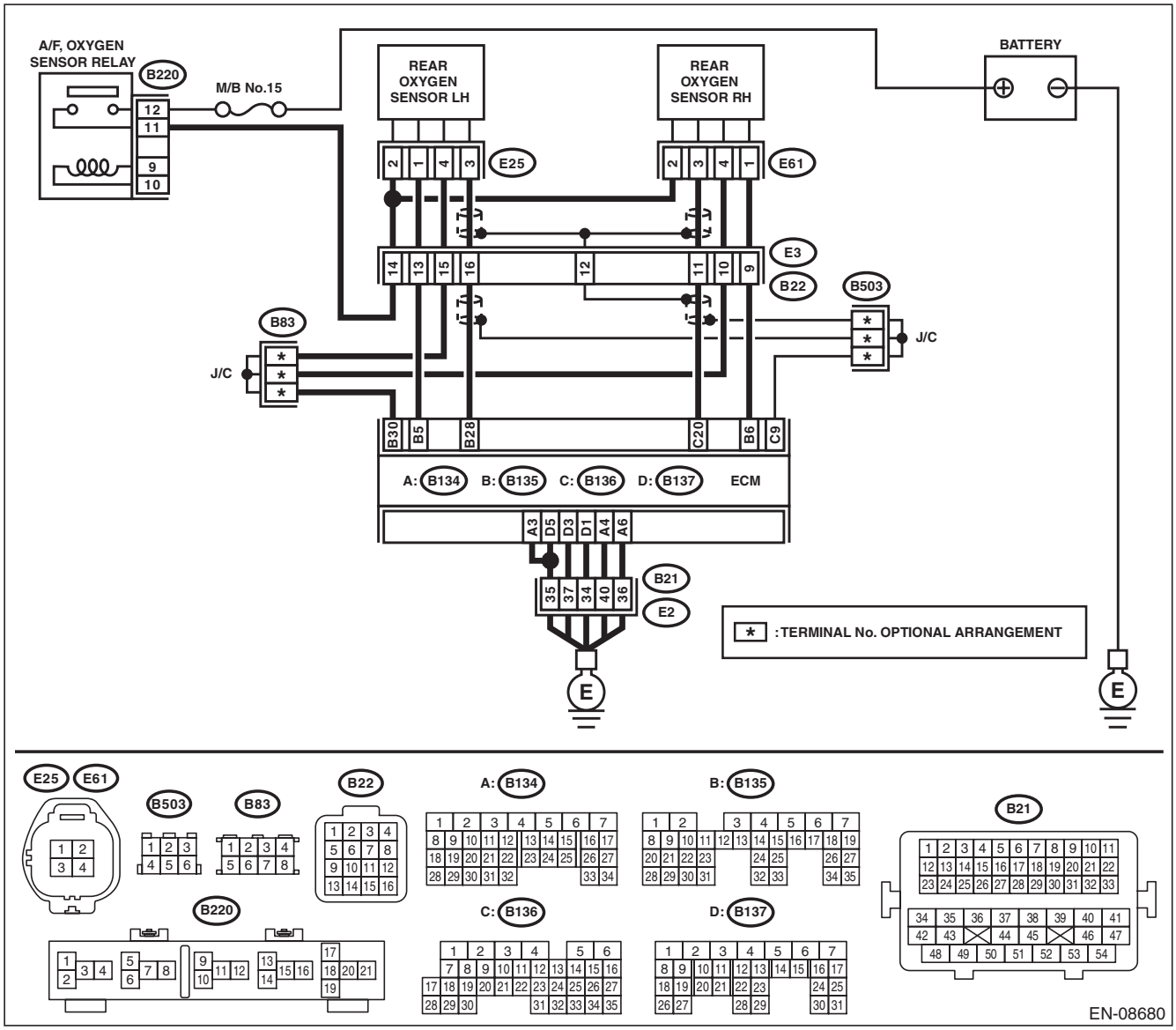

Step		Check	Yes	No
1	**CHECK FOR ANY OTHER DTC ON DISPLAY.**	Is any other DTC displayed?	Check DTC using "List of Diagnostic Trouble Code (DTC)". <Ref. to EN(H6DO)(diag)-85, List of Diagnostic Trouble Code (DTC).>	Go to step **2**.
2	**CHECK FRONT OXYGEN (A/F) SENSOR CONNECTOR AND COUPLING CONNECTOR.**	Has water entered the connector?	Completely remove any water inside.	Go to step **3**.

GETTHEMANUALS.org

	Step	Check	Yes	No
3	**CHECK HARNESS BETWEEN ECM AND FRONT OXYGEN (A/F) SENSOR CONNECTOR.** 1) Turn the ignition switch to OFF. 2) Disconnect the connectors from ECM and front oxygen (A/F) sensor. 3) Measure the resistance of harness between ECM and front oxygen (A/F) sensor connector. ***Connector & terminal*** ***(B136) No. 19 — (E47) No. 3:*** ***(B136) No. 18 — (E47) No. 4:***	Is the resistance less than 1 Ω?	Go to step **4**.	Repair the harness and connector. NOTE: In this case, repair the following item: • Open circuit in harness between ECM and front oxygen (A/F) sensor connector • Poor contact of coupling connector
4	**CHECK HARNESS BETWEEN ECM AND FRONT OXYGEN (A/F) SENSOR CONNECTOR.** Measure the resistance between ECM and chassis ground. ***Connector & terminal*** ***(B136) No. 19 — Chassis ground:*** ***(B136) No. 18 — Chassis ground:***	Is the resistance 1 MΩ or more?	Go to step **5**.	Repair the ground short circuit of harness between ECM and front oxygen (A/F) sensor connector.
5	**CHECK OUTPUT SIGNAL FOR ECM.** 1) Connect the connector to ECM. 2) Turn the ignition switch to ON. 3) Measure the voltage between front oxygen (A/F) sensor connector and chassis ground. ***Connector & terminal*** ***(E47) No. 3 (+) — Chassis ground (–):***	Is the voltage 4.5 V or more?	Go to step **7**.	Go to step **6**.
6	**CHECK OUTPUT SIGNAL FOR ECM.** Measure the voltage between front oxygen (A/F) sensor connector and chassis ground. ***Connector & terminal*** ***(E47) No. 4 (+) — Chassis ground (–):***	Is the voltage 4.95 V or more?	Go to step **7**.	Go to step **8**.
7	**CHECK OUTPUT SIGNAL FOR ECM.** Measure the voltage between front oxygen (A/F) sensor connector and chassis ground. ***Connector & terminal*** ***(E47) No. 3 (+) — Chassis ground (–):*** ***(E47) No. 4 (+) — Chassis ground (–):***	Is the voltage 8 V or more?	Repair the short circuit to power in the harness between ECM and front oxygen (A/F) sensor connector. After repair, replace the ECM. <Ref. to FU(H6DO)-54, Engine Control Module (ECM).>	Repair the poor contact of ECM connector.
8	**CHECK EXHAUST SYSTEM.**	Are there holes or loose bolts on exhaust system?	Repair the exhaust system.	Go to step **9**.
9	**CHECK AIR INTAKE SYSTEM.**	Are there holes, loose bolts or disconnection of hose on air intake system?	Repair the air intake system.	Go to step **10**.

GETTHEMANUALS.org

Step		Check	Yes	No
10	**CHECK FUEL PRESSURE.** **WARNING:** **Place "NO OPEN FLAMES" signs near the working area.** **CAUTION:** **Be careful not to spill fuel.** 1) Connect the front oxygen (A/F) sensor connector. 2) Measure the fuel pressure. <Ref. to ME(H6DO)-31, INSPECTION, Fuel Pressure.> **CAUTION:** **Release fuel pressure before removing the fuel pressure gauge.**	Is the measured value 340 — 400 kPa (3.5 — 4.1 kgf/cm^2, 49 — 58 psi)?	Go to step **11**.	Repair the following item. Fuel pressure is too high: • Clogged fuel line or bent hose Fuel pressure is too low: • Improper fuel pump discharge • Clogged fuel line
11	**CHECK ENGINE COOLANT TEMPERATURE SENSOR.** 1) Start the engine and warm up completely. 2) Read the value of «Coolant Temp.» using the Subaru Select Monitor or a general scan tool. NOTE: • Subaru Select Monitor For detailed operation procedures, refer to "READ CURRENT DATA FOR ENGINE". <Ref. to EN(H6DO)(diag)-35, Subaru Select Monitor.> • General scan tool For detailed operation procedures, refer to the general scan tool operation manual.	Is the value of «Coolant Temp.» 75°C (167°F) or more?	Go to step **12**.	Replace the engine coolant temperature sensor. <Ref. to FU(H6DO)-29, Engine Coolant Temperature Sensor.>
12	**CHECK MASS AIR FLOW AND INTAKE AIR TEMPERATURE SENSOR.** 1) Start the engine and warm up engine until coolant temperature is higher than 75°C (167°F). 2) Place the select lever in "P" range or "N" range. 3) Turn the A/C switch to OFF. 4) Turn all the accessory switches to OFF. 5) Read the value of «Mass Air Flow» using the Subaru Select Monitor or a general scan tool. NOTE: • Subaru Select Monitor For detailed operation procedures, refer to "READ CURRENT DATA FOR ENGINE". <Ref. to EN(H6DO)(diag)-35, Subaru Select Monitor.> • General scan tool For detailed operation procedures, refer to the general scan tool operation manual.	Is the value of «Mass Air Flow» 2.0 — 5.0 g/s (0.26 — 0.66 lb/m)?	Go to step **13**.	Replace the mass air flow and intake air temperature sensor. <Ref. to FU(H6DO)-41, Mass Air Flow and Intake Air Temperature Sensor.>

GETTHEMANUALS.org

	Step	Check	Yes	No
13	**CHECK MASS AIR FLOW AND INTAKE AIR TEMPERATURE SENSOR.** 1) Start the engine and warm up engine until coolant temperature is higher than 75°C (167°F). 2) Place the select lever in “P” range or “N” range. 3) Turn the A/C switch to OFF. 4) Turn all the accessory switches to OFF. 5) Open the front hood. 6) Measure the ambient temperature. 7) Read the value of «Intake Air Temp.» using the Subaru Select Monitor or a general scan tool. NOTE: • Subaru Select Monitor For detailed operation procedures, refer to “READ CURRENT DATA FOR ENGINE”. <Ref. to EN(H6DO)(diag)-35, Subaru Select Monitor.> • General scan tool For detailed operation procedures, refer to the general scan tool operation manual.	Subtract ambient temperature from «Intake Air Temp.». Is the obtained value –10 — 50°C (–18 — 90°F)?	Go to step **14**.	Check the mass air flow and intake air temperature sensor. <Ref. to FU(H6DO)-41, Mass Air Flow and Intake Air Temperature Sensor.>
14	**CHECK REAR OXYGEN SENSOR DATA.** 1) Warm up the engine until engine coolant temperature is higher than 75°C (167°F), and keep the engine speed at 3,000 rpm. (2 minutes maximum) 2) Read the value of «Front O2 Sensor #1» using the Subaru Select Monitor or a general scan tool. NOTE: • Subaru Select Monitor For detailed operation procedures, refer to “READ CURRENT DATA FOR ENGINE”. <Ref. to EN(H6DO)(diag)-35, Subaru Select Monitor.> • General scan tool For detailed operation procedures, refer to the general scan tool operation manual.	Is the value of «Front O2 Sensor #1» 0.490 V or more?	Go to step **15**.	Go to step **16**.
15	**CHECK REAR OXYGEN SENSOR DATA.** 1) Warm up the engine until engine coolant temperature is higher than 75°C (167°F), and rapidly reduce the engine speed from 3,000 rpm. 2) Read the value of «Front O2 Sensor #1» using the Subaru Select Monitor or a general scan tool. NOTE: • Subaru Select Monitor For detailed operation procedures, refer to “READ CURRENT DATA FOR ENGINE”. <Ref. to EN(H6DO)(diag)-35, Subaru Select Monitor.> • General scan tool For detailed operation procedures, refer to the general scan tool operation manual.	Is the value of «Front O2 Sensor #1» 0.250 V or less?	Go to step **17**.	Go to step **16**.
16	**CHECK REAR OXYGEN SENSOR CONNECTOR AND COUPLING CONNECTOR.**	Has water entered the connector?	Completely remove any water inside.	Go to step **18**.

GETTHEMANUALS.org

	Step	Check	Yes	No
17	**CHECK FRONT OXYGEN (A/F) SENSOR USING REAR OXYGEN SENSOR SIGNAL.** 1) Warm up the engine until engine coolant temperature is higher than 75°C (167°F), then keep the engine idling for 5 minutes or more. 2) Read the value of «Front O2 Sensor #1» using the Subaru Select Monitor or a general scan tool. NOTE: • Subaru Select Monitor For detailed operation procedures, refer to "READ CURRENT DATA FOR ENGINE". <Ref. to EN(H6DO)(diag)-35, Subaru Select Monitor.> • General scan tool For detailed operation procedures, refer to the general scan tool operation manual.	Is the value in «Front O2 Sensor #1» kept at 0.250 V or less for 5 minutes or more?	Replace the front oxygen (A/F) sensor. <Ref. to FU(H6DO)-50, Front Oxygen (A/F) Sensor.>	Go to step **18**.
18	**CHECK HARNESS BETWEEN ECM AND REAR OXYGEN SENSOR CONNECTOR.** 1) Turn the ignition switch to OFF. 2) Disconnect the connector from ECM and rear oxygen sensor. 3) Measure the resistance of harness between ECM and rear oxygen sensor connector. ***Connector & terminal*** ***(B136) No. 20 — (E61) No. 3:*** ***(B135) No. 30 — (E61) No. 4:***	Is the resistance less than 1 Ω?	Go to step **19**.	Repair the harness and connector. NOTE: In this case, repair the following item: • Open circuit in harness between ECM and rear oxygen sensor connector • Poor contact of coupling connector
19	**CHECK HARNESS BETWEEN ECM AND REAR OXYGEN SENSOR CONNECTOR.** 1) Connect the connector to ECM. 2) Turn the ignition switch to ON. 3) Measure the voltage between rear oxygen sensor connector and chassis ground. ***Connector & terminal*** ***(E61) No. 3 (+) — Chassis ground (–):***	Is the voltage 0.2 — 0.5 V?	Replace the rear oxygen sensor. <Ref. to FU(H6DO)-52, Rear Oxygen Sensor.>	Repair the harness and connector. NOTE: In this case, repair the following item: • Open circuit in harness between ECM and rear oxygen sensor connector • Poor contact of ECM connector • Poor contact of coupling connector

GETTHEMANUALS.org

FB:DTC P2097 POST CATALYST FUEL TRIM SYSTEM TOO RICH (BANK 1)

DTC DETECTING CONDITION:

- Detected when two consecutive driving cycles with fault occur.
- GENERAL DESCRIPTION <Ref. to GD(H6DO)-232, DTC P2097 POST CATALYST FUEL TRIM SYSTEM TOO RICH (BANK 1), Diagnostic Trouble Code (DTC) Detecting Criteria.>

CAUTION:

After servicing or replacing faulty parts, perform Clear Memory Mode <Ref. to EN(H6DO)(diag)-57, OPERATION, Clear Memory Mode.>, and Inspection Mode <Ref. to EN(H6DO)(diag)-44, PROCEDURE, Inspection Mode.>.

WIRING DIAGRAM:

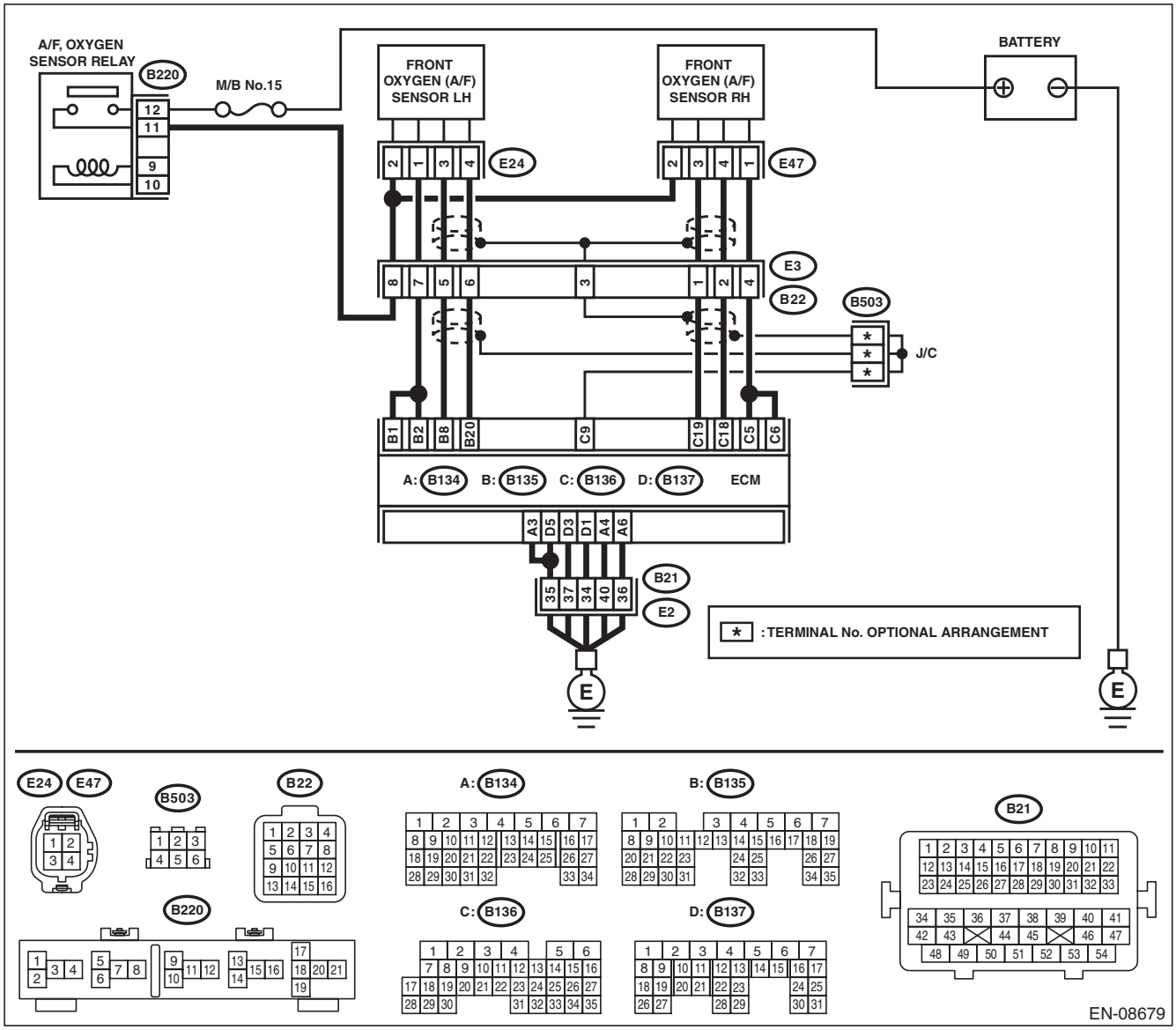

GETTHEMANUALS.org

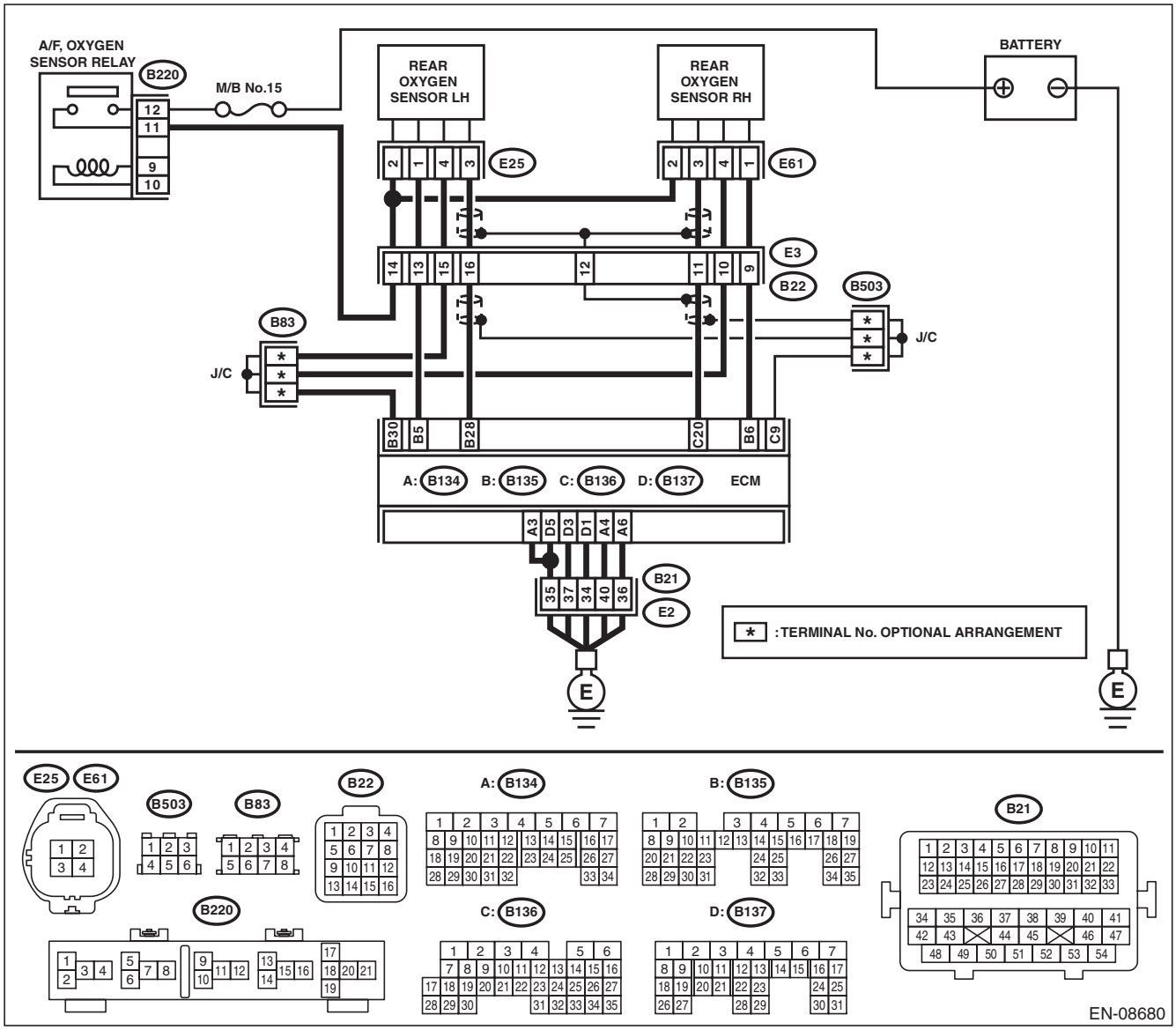

Step		Check	Yes	No
1	**CHECK FOR ANY OTHER DTC ON DISPLAY.**	Is any other DTC displayed?	Check DTC using "List of Diagnostic Trouble Code (DTC)". <Ref. to EN(H6DO)(diag)-85, List of Diagnostic Trouble Code (DTC).>	Go to step **2**.
2	**CHECK FRONT OXYGEN (A/F) SENSOR CONNECTOR AND COUPLING CONNECTOR.**	Has water entered the connector?	Completely remove any water inside.	Go to step **3**.

GETTHEMANUALS.org

	Step	Check	Yes	No
3	**CHECK HARNESS BETWEEN ECM AND FRONT OXYGEN (A/F) SENSOR CONNECTOR.** 1) Turn the ignition switch to OFF. 2) Disconnect the connectors from ECM and front oxygen (A/F) sensor. 3) Measure the resistance of harness between ECM and front oxygen (A/F) sensor connector. ***Connector & terminal*** ***(B136) No. 19 — (E47) No. 3:*** ***(B136) No. 18 — (E47) No. 4:***	Is the resistance less than 1 Ω?	Go to step **4**.	Repair the harness and connector. NOTE: In this case, repair the following item: • Open circuit in harness between ECM and front oxygen (A/F) sensor connector • Poor contact of coupling connector
4	**CHECK HARNESS BETWEEN ECM AND FRONT OXYGEN (A/F) SENSOR CONNECTOR.** Measure the resistance between ECM and chassis ground. ***Connector & terminal*** ***(B136) No. 19 — Chassis ground:*** ***(B136) No. 18 — Chassis ground:***	Is the resistance 1 MΩ or more?	Go to step **5**.	Repair the ground short circuit of harness between ECM and front oxygen (A/F) sensor connector.
5	**CHECK OUTPUT SIGNAL FOR ECM.** 1) Connect the connector to ECM. 2) Turn the ignition switch to ON. 3) Measure the voltage between front oxygen (A/F) sensor connector and chassis ground. ***Connector & terminal*** ***(E47) No. 3 (+) — Chassis ground (–):***	Is the voltage 4.5 V or more?	Go to step **7**.	Go to step **6**.
6	**CHECK OUTPUT SIGNAL FOR ECM.** Measure the voltage between front oxygen (A/F) sensor connector and chassis ground. ***Connector & terminal*** ***(E47) No. 4 (+) — Chassis ground (–):***	Is the voltage 4.95 V or more?	Go to step **7**.	Go to step **8**.
7	**CHECK OUTPUT SIGNAL FOR ECM.** Measure the voltage between front oxygen (A/F) sensor connector and chassis ground. ***Connector & terminal*** ***(E47) No. 3 (+) — Chassis ground (–):*** ***(E47) No. 4 (+) — Chassis ground (–):***	Is the voltage 8 V or more?	Repair the short circuit to power in the harness between ECM and front oxygen (A/F) sensor connector. After repair, replace the ECM. <Ref. to FU(H6DO)-54, Engine Control Module (ECM).>	Repair the poor contact of ECM connector.
8	**CHECK EXHAUST SYSTEM.**	Are there holes or loose bolts on exhaust system?	Repair the exhaust system.	Go to step **9**.
9	**CHECK AIR INTAKE SYSTEM.**	Are there holes, loose bolts or disconnection of hose on air intake system?	Repair the air intake system.	Go to step **10**.

GETTHEMANUALS.org

Step		Check	Yes	No
10	**CHECK FUEL PRESSURE.** **WARNING:** **Place "NO OPEN FLAMES" signs near the working area.** **CAUTION:** **Be careful not to spill fuel.** 1) Connect the front oxygen (A/F) sensor connector. 2) Measure the fuel pressure. <Ref. to ME(H6DO)-31, INSPECTION, Fuel Pressure.> **CAUTION:** **Release fuel pressure before removing the fuel pressure gauge.**	Is the measured value 340 — 400 kPa (3.5 — 4.1 kgf/cm^2, 49 — 58 psi)?	Go to step **11**.	Repair the following item. Fuel pressure is too high: • Clogged fuel line or bent hose Fuel pressure is too low: • Improper fuel pump discharge • Clogged fuel line
11	**CHECK ENGINE COOLANT TEMPERATURE SENSOR.** 1) Start the engine and warm up completely. 2) Read the value of «Coolant Temp.» using the Subaru Select Monitor or a general scan tool. NOTE: • Subaru Select Monitor For detailed operation procedures, refer to "READ CURRENT DATA FOR ENGINE". <Ref. to EN(H6DO)(diag)-35, Subaru Select Monitor.> • General scan tool For detailed operation procedures, refer to the general scan tool operation manual.	Is the value of «Coolant Temp.» 75°C (167°F) or more?	Go to step **12**.	Replace the engine coolant temperature sensor. <Ref. to FU(H6DO)-29, Engine Coolant Temperature Sensor.>
12	**CHECK MASS AIR FLOW AND INTAKE AIR TEMPERATURE SENSOR.** 1) Start the engine and warm up engine until coolant temperature is higher than 75°C (167°F). 2) Place the select lever in "P" range or "N" range. 3) Turn the A/C switch to OFF. 4) Turn all the accessory switches to OFF. 5) Read the value of «Mass Air Flow» using the Subaru Select Monitor or a general scan tool. NOTE: • Subaru Select Monitor For detailed operation procedures, refer to "READ CURRENT DATA FOR ENGINE". <Ref. to EN(H6DO)(diag)-35, Subaru Select Monitor.> • General scan tool For detailed operation procedures, refer to the general scan tool operation manual.	Is the value of «Mass Air Flow» 2.0 — 5.0 g/s (0.26 — 0.66 lb/m)?	Go to step **13**.	Replace the mass air flow and intake air temperature sensor. <Ref. to FU(H6DO)-41, Mass Air Flow and Intake Air Temperature Sensor.>

GETTHEMANUALS.org

	Step	Check	Yes	No
13	**CHECK MASS AIR FLOW AND INTAKE AIR TEMPERATURE SENSOR.** 1) Start the engine and warm up engine until coolant temperature is higher than 75°C (167°F). 2) Place the select lever in “P” range or “N” range. 3) Turn the A/C switch to OFF. 4) Turn all the accessory switches to OFF. 5) Open the front hood. 6) Measure the ambient temperature. 7) Read the value of «Intake Air Temp.» using the Subaru Select Monitor or a general scan tool. NOTE: • Subaru Select Monitor For detailed operation procedures, refer to “READ CURRENT DATA FOR ENGINE”. <Ref. to EN(H6DO)(diag)-35, Subaru Select Monitor.> • General scan tool For detailed operation procedures, refer to the general scan tool operation manual.	Subtract ambient temperature from «Intake Air Temp.». Is the obtained value –10 — 50°C (–18 — 90°F)?	Go to step **14**.	Check the mass air flow and intake air temperature sensor. <Ref. to FU(H6DO)-41, Mass Air Flow and Intake Air Temperature Sensor.>
14	**CHECK REAR OXYGEN SENSOR DATA.** 1) Warm up the engine until engine coolant temperature is higher than 75°C (167°F), and keep the engine speed at 3,000 rpm. (2 minutes maximum) 2) Read the value of «Front O2 Sensor #1» using the Subaru Select Monitor or a general scan tool. NOTE: • Subaru Select Monitor For detailed operation procedures, refer to “READ CURRENT DATA FOR ENGINE”. <Ref. to EN(H6DO)(diag)-35, Subaru Select Monitor.> • General scan tool For detailed operation procedures, refer to the general scan tool operation manual.	Is the value of «Front O2 Sensor #1» 0.490 V or more?	Go to step **15**.	Go to step **16**.
15	**CHECK REAR OXYGEN SENSOR DATA.** 1) Warm up the engine until engine coolant temperature is higher than 75°C (167°F), and rapidly reduce the engine speed from 3,000 rpm. 2) Read the value of «Front O2 Sensor #1» using the Subaru Select Monitor or a general scan tool. NOTE: • Subaru Select Monitor For detailed operation procedures, refer to “READ CURRENT DATA FOR ENGINE”. <Ref. to EN(H6DO)(diag)-35, Subaru Select Monitor.> • General scan tool For detailed operation procedures, refer to the general scan tool operation manual.	Is the value of «Front O2 Sensor #1» 0.250 V or less?	Go to step **17**.	Go to step **16**.
16	**CHECK REAR OXYGEN SENSOR CONNECTOR AND COUPLING CONNECTOR.**	Has water entered the connector?	Completely remove any water inside.	Go to step **18**.

GETTHEMANUALS.org

	Step	Check	Yes	No
17	**CHECK FRONT OXYGEN (A/F) SENSOR USING REAR OXYGEN SENSOR SIGNAL.** 1) Warm up the engine until engine coolant temperature is higher than 75°C (167°F), then keep the engine idling for 5 minutes or more. 2) Read the value of «Front O2 Sensor #1» using the Subaru Select Monitor or a general scan tool. NOTE: • Subaru Select Monitor For detailed operation procedures, refer to "READ CURRENT DATA FOR ENGINE". <Ref. to EN(H6DO)(diag)-35, Subaru Select Monitor.> • General scan tool For detailed operation procedures, refer to the general scan tool operation manual.	Is the value in «Front O2 Sensor #1» kept at 0.8 V or more for 5 minutes or more?	Replace the front oxygen (A/F) sensor. <Ref. to FU(H6DO)-50, Front Oxygen (A/F) Sensor.>	Go to step **18**.
18	**CHECK HARNESS BETWEEN ECM AND REAR OXYGEN SENSOR CONNECTOR.** 1) Turn the ignition switch to OFF. 2) Disconnect the connector from ECM and rear oxygen sensor. 3) Measure the resistance of harness between ECM and rear oxygen sensor connector. ***Connector & terminal*** ***(B136) No. 20 — (E61) No. 3:*** ***(B135) No. 30 — (E61) No. 4:***	Is the resistance less than 1 Ω?	Go to step **19**.	Repair the harness and connector. NOTE: In this case, repair the following item: • Open circuit in harness between ECM and rear oxygen sensor connector • Poor contact of coupling connector
19	**CHECK HARNESS BETWEEN ECM AND REAR OXYGEN SENSOR CONNECTOR.** 1) Connect the connector to ECM. 2) Turn the ignition switch to ON. 3) Measure the voltage between rear oxygen sensor connector and chassis ground. ***Connector & terminal*** ***(E61) No. 3 (+) — Chassis ground (–):***	Is the voltage 0.2 — 0.5 V?	Replace the rear oxygen sensor. <Ref. to FU(H6DO)-52, Rear Oxygen Sensor.>	Repair the harness and connector. NOTE: In this case, repair the following item: • Open circuit in harness between ECM and rear oxygen sensor connector • Poor contact of ECM connector • Poor contact of coupling connector

GETTHEMANUALS.org

FC:DTC P2098 POST CATALYST FUEL TRIM SYSTEM TOO LEAN BANK 2

DTC DETECTING CONDITION:

- Detected when two consecutive driving cycles with fault occur.
- GENERAL DESCRIPTION <Ref. to GD(H6DO)-233, DTC P2098 POST CATALYST FUEL TRIM SYSTEM TOO LEAN BANK 2, Diagnostic Trouble Code (DTC) Detecting Criteria.>

CAUTION:

After servicing or replacing faulty parts, perform Clear Memory Mode <Ref. to EN(H6DO)(diag)-57, OPERATION, Clear Memory Mode.>, and Inspection Mode <Ref. to EN(H6DO)(diag)-44, PROCEDURE, Inspection Mode.>.

WIRING DIAGRAM:

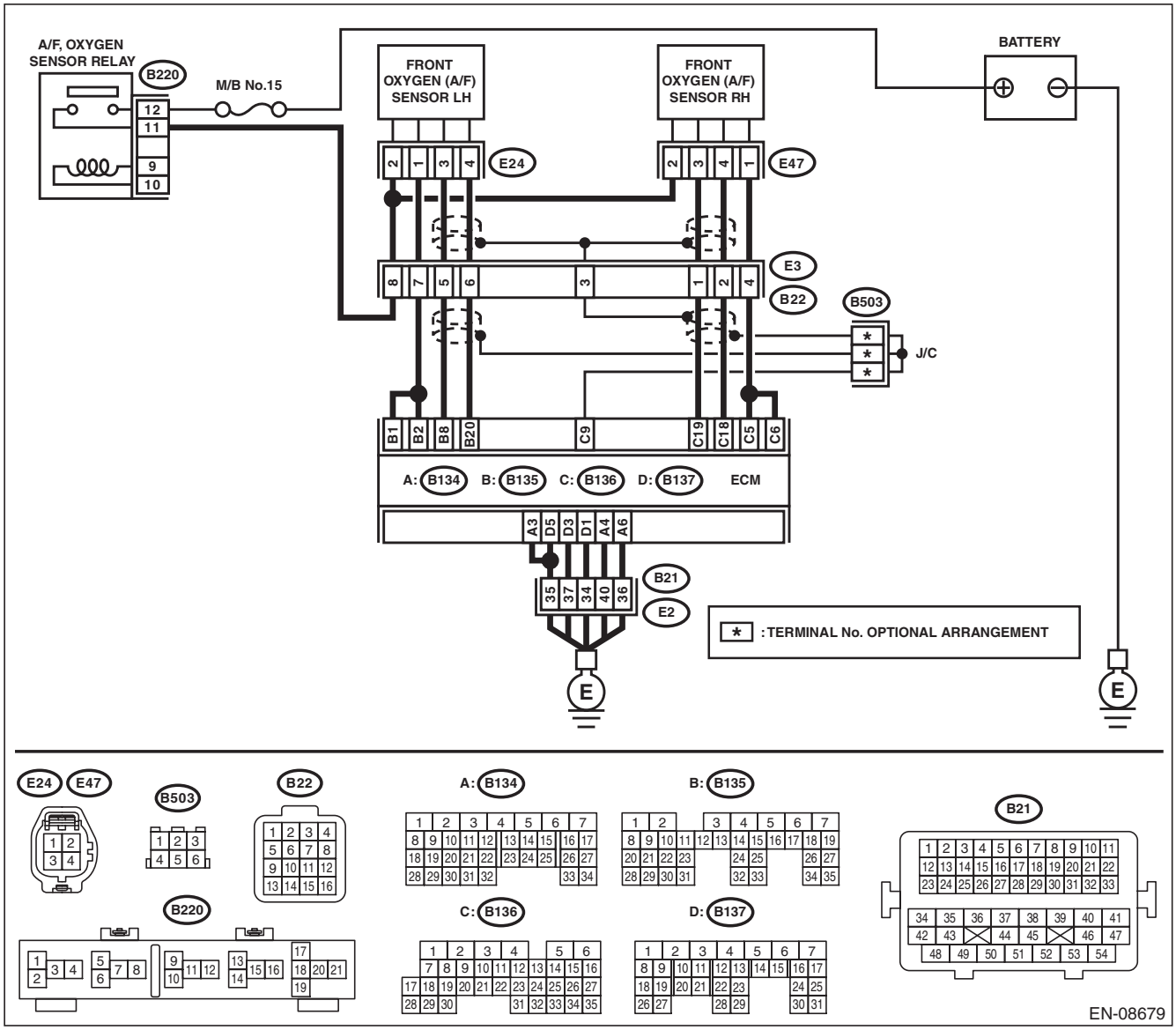

GETTHEMANUALS.org

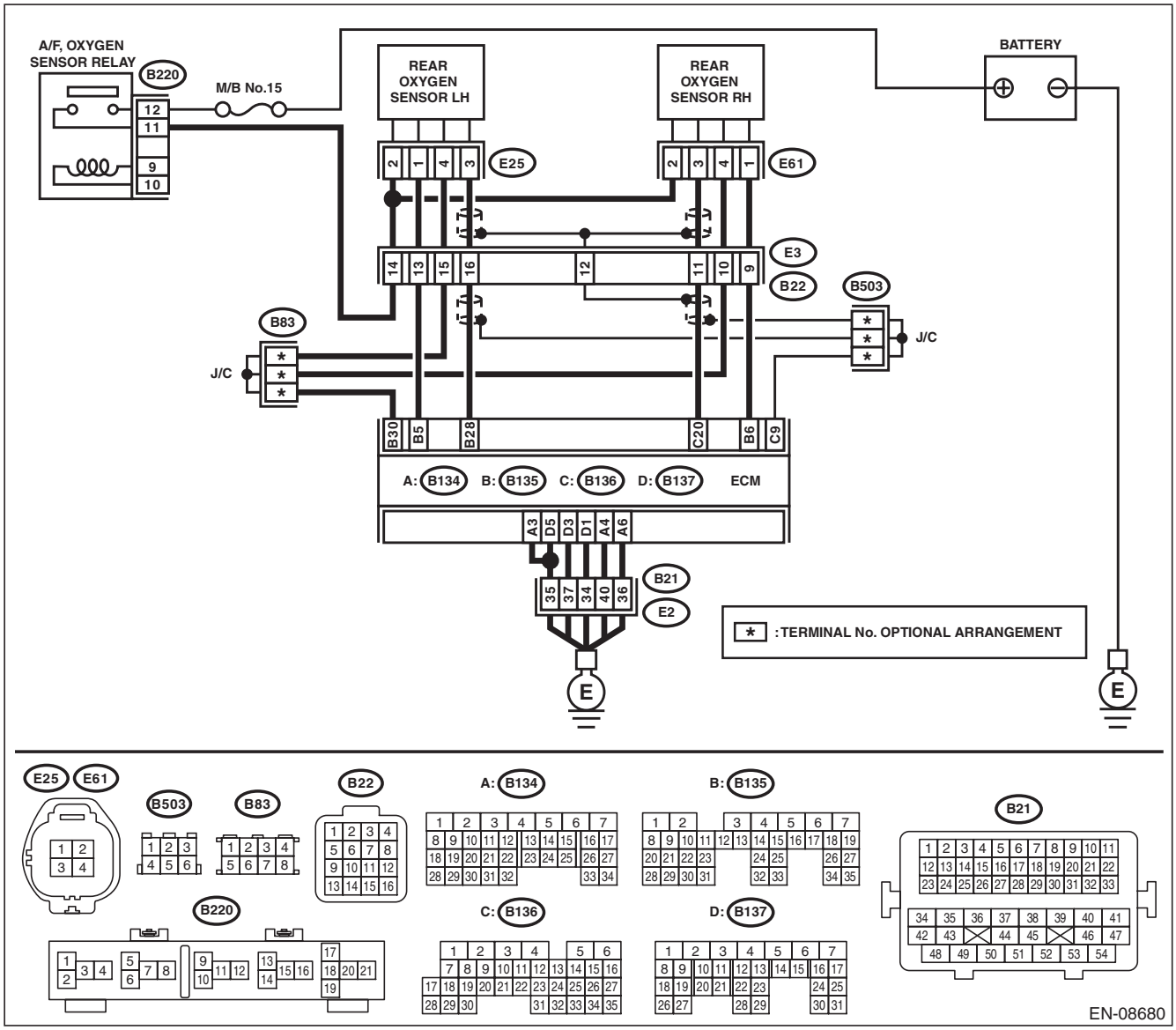

Step		Check	Yes	No
1	**CHECK FOR ANY OTHER DTC ON DISPLAY.**	Is any other DTC displayed?	Check DTC using “List of Diagnostic Trouble Code (DTC)”. <Ref. to EN(H6DO)(diag)-85, List of Diagnostic Trouble Code (DTC).>	Go to step **2**.
2	**CHECK FRONT OXYGEN (A/F) SENSOR CONNECTOR AND COUPLING CONNECTOR.**	Has water entered the connector?	Completely remove any water inside.	Go to step **3**.

GETTHEMANUALS.org

Step		Check	Yes	No
3	**CHECK HARNESS BETWEEN ECM AND FRONT OXYGEN (A/F) SENSOR CONNECTOR.** 1) Turn the ignition switch to OFF. 2) Disconnect the connectors from ECM and front oxygen (A/F) sensor. 3) Measure the resistance of harness between ECM and front oxygen (A/F) sensor connector. ***Connector & terminal*** ***(B135) No. 8 — (E24) No. 3:*** ***(B135) No. 20 — (E24) No. 4:***	Is the resistance less than 1 Ω?	Go to step **4**.	Repair the harness and connector. NOTE: In this case, repair the following item: • Open circuit in harness between ECM and front oxygen (A/F) sensor connector • Poor contact of coupling connector
4	**CHECK HARNESS BETWEEN ECM AND FRONT OXYGEN (A/F) SENSOR CONNECTOR.** Measure the resistance between ECM and chassis ground. ***Connector & terminal*** ***(B135) No. 8 — Chassis ground:*** ***(B135) No. 20 — Chassis ground:***	Is the resistance 1 MΩ or more?	Go to step **5**.	Repair the ground short circuit of harness between ECM and front oxygen (A/F) sensor connector.
5	**CHECK OUTPUT SIGNAL FOR ECM.** 1) Connect the connector to ECM. 2) Turn the ignition switch to ON. 3) Measure the voltage between front oxygen (A/F) sensor connector and chassis ground. ***Connector & terminal*** ***(E24) No. 3 (+) — Chassis ground (–):***	Is the voltage 4.5 V or more?	Go to step **7**.	Go to step **6**.
6	**CHECK OUTPUT SIGNAL FOR ECM.** Measure the voltage between front oxygen (A/F) sensor connector and chassis ground. ***Connector & terminal*** ***(E24) No. 4 (+) — Chassis ground (–):***	Is the voltage 4.95 V or more?	Go to step **7**.	Go to step **8**.
7	**CHECK OUTPUT SIGNAL FOR ECM.** Measure the voltage between front oxygen (A/F) sensor connector and chassis ground. ***Connector & terminal*** ***(E24) No. 3 (+) — Chassis ground (–):*** ***(E24) No. 4 (+) — Chassis ground (–):***	Is the voltage 8 V or more?	Repair the short circuit to power in the harness between ECM and front oxygen (A/F) sensor connector. After repair, replace the ECM. <Ref. to FU(H6DO)-54, Engine Control Module (ECM).>	Repair the poor contact of ECM connector.
8	**CHECK EXHAUST SYSTEM.**	Are there holes or loose bolts on exhaust system?	Repair the exhaust system.	Go to step **9**.
9	**CHECK AIR INTAKE SYSTEM.**	Are there holes, loose bolts or disconnection of hose on air intake system?	Repair the air intake system.	Go to step **10**.

GETTHEMANUALS.org

Step		Check	Yes	No
10	**CHECK FUEL PRESSURE.** **WARNING:** **Place "NO OPEN FLAMES" signs near the working area.** **CAUTION:** **Be careful not to spill fuel.** 1) Connect the front oxygen (A/F) sensor connector. 2) Measure the fuel pressure. <Ref. to ME(H6DO)-31, INSPECTION, Fuel Pressure.> **CAUTION:** **Release fuel pressure before removing the fuel pressure gauge.**	Is the measured value 340 — 400 kPa (3.5 — 4.1 kgf/cm^2, 49 — 58 psi)?	Go to step **11**.	Repair the following item. Fuel pressure is too high: • Clogged fuel line or bent hose Fuel pressure is too low: • Improper fuel pump discharge • Clogged fuel line
11	**CHECK ENGINE COOLANT TEMPERATURE SENSOR.** 1) Start the engine and warm up completely. 2) Read the value of «Coolant Temp.» using the Subaru Select Monitor or a general scan tool. NOTE: • Subaru Select Monitor For detailed operation procedures, refer to "READ CURRENT DATA FOR ENGINE". <Ref. to EN(H6DO)(diag)-35, Subaru Select Monitor.> • General scan tool For detailed operation procedures, refer to the general scan tool operation manual.	Is the value of «Coolant Temp.» 75°C (167°F) or more?	Go to step **12**.	Replace the engine coolant temperature sensor. <Ref. to FU(H6DO)-29, Engine Coolant Temperature Sensor.>
12	**CHECK MASS AIR FLOW AND INTAKE AIR TEMPERATURE SENSOR.** 1) Start the engine and warm up engine until coolant temperature is higher than 75°C (167°F). 2) Place the select lever in "P" range or "N" range. 3) Turn the A/C switch to OFF. 4) Turn all the accessory switches to OFF. 5) Read the value of «Mass Air Flow» using the Subaru Select Monitor or a general scan tool. NOTE: • Subaru Select Monitor For detailed operation procedures, refer to "READ CURRENT DATA FOR ENGINE". <Ref. to EN(H6DO)(diag)-35, Subaru Select Monitor.> • General scan tool For detailed operation procedures, refer to the general scan tool operation manual.	Is the value of «Mass Air Flow» 2.0 — 5.0 g/s (0.26 — 0.66 lb/m)?	Go to step **13**.	Replace the mass air flow and intake air temperature sensor. <Ref. to FU(H6DO)-41, Mass Air Flow and Intake Air Temperature Sensor.>

GETTHEMANUALS.org

	Step	Check	Yes	No
13	**CHECK MASS AIR FLOW AND INTAKE AIR TEMPERATURE SENSOR.** 1) Start the engine and warm up engine until coolant temperature is higher than 75°C (167°F). 2) Place the select lever in “P” range or “N” range. 3) Turn the A/C switch to OFF. 4) Turn all the accessory switches to OFF. 5) Open the front hood. 6) Measure the ambient temperature. 7) Read the value of «Intake Air Temp.» using the Subaru Select Monitor or a general scan tool. NOTE: • Subaru Select Monitor For detailed operation procedures, refer to “READ CURRENT DATA FOR ENGINE”. <Ref. to EN(H6DO)(diag)-35, Subaru Select Monitor.> • General scan tool For detailed operation procedures, refer to the general scan tool operation manual.	Subtract ambient temperature from «Intake Air Temp.». Is the obtained value –10 — 50°C (–18 — 90°F)?	Go to step **14**.	Check the mass air flow and intake air temperature sensor. <Ref. to FU(H6DO)-41, Mass Air Flow and Intake Air Temperature Sensor.>
14	**CHECK REAR OXYGEN SENSOR DATA.** 1) Warm up the engine until engine coolant temperature is higher than 75°C (167°F), and keep the engine speed at 3,000 rpm. (2 minutes maximum) 2) Read the value of «Front O2 Sensor #2» using the Subaru Select Monitor or a general scan tool. NOTE: • Subaru Select Monitor For detailed operation procedures, refer to “READ CURRENT DATA FOR ENGINE”. <Ref. to EN(H6DO)(diag)-35, Subaru Select Monitor.> • General scan tool For detailed operation procedures, refer to the general scan tool operation manual.	Is the value of «Front O2 Sensor #2» 0.490 V or more?	Go to step **15**.	Go to step **16**.
15	**CHECK REAR OXYGEN SENSOR DATA.** 1) Warm up the engine until engine coolant temperature is higher than 75°C (167°F), and rapidly reduce the engine speed from 3,000 rpm. 2) Read the value of «Front O2 Sensor #2» using the Subaru Select Monitor or a general scan tool. NOTE: • Subaru Select Monitor For detailed operation procedures, refer to “READ CURRENT DATA FOR ENGINE”. <Ref. to EN(H6DO)(diag)-35, Subaru Select Monitor.> • General scan tool For detailed operation procedures, refer to the general scan tool operation manual.	Is the value of «Front O2 Sensor #2» 0.250 V or less?	Go to step **17**.	Go to step **16**.
16	**CHECK REAR OXYGEN SENSOR CONNECTOR AND COUPLING CONNECTOR.**	Has water entered the connector?	Completely remove any water inside.	Go to step **18**.

GETTHEMANUALS.org

	Step	Check	Yes	No
17	**CHECK FRONT OXYGEN (A/F) SENSOR USING REAR OXYGEN SENSOR SIGNAL.** 1) Warm up the engine until engine coolant temperature is higher than 75°C (167°F), then keep the engine idling for 5 minutes or more. 2) Read the value of «Front O2 Sensor #2» using the Subaru Select Monitor or a general scan tool. NOTE: • Subaru Select Monitor For detailed operation procedures, refer to "READ CURRENT DATA FOR ENGINE". <Ref. to EN(H6DO)(diag)-35, Subaru Select Monitor.> • General scan tool For detailed operation procedures, refer to the general scan tool operation manual.	Is the value in «Front O2 Sensor #2» kept at 0.250 V or less for 5 minutes or more?	Replace the front oxygen (A/F) sensor. <Ref. to FU(H6DO)-50, Front Oxygen (A/F) Sensor.>	Go to step **18**.
18	**CHECK HARNESS BETWEEN ECM AND REAR OXYGEN SENSOR CONNECTOR.** 1) Turn the ignition switch to OFF. 2) Disconnect the connector from ECM and rear oxygen sensor. 3) Measure the resistance of harness between ECM and rear oxygen sensor connector. ***Connector & terminal*** ***(B135) No. 28 — (E25) No. 3:*** ***(B135) No. 30 — (E25) No. 4:***	Is the resistance less than 1 Ω?	Go to step **19**.	Repair the harness and connector. NOTE: In this case, repair the following item: • Open circuit in harness between ECM and rear oxygen sensor connector • Poor contact of coupling connector
19	**CHECK HARNESS BETWEEN ECM AND REAR OXYGEN SENSOR CONNECTOR.** 1) Connect the connector to ECM. 2) Turn the ignition switch to ON. 3) Measure the voltage between rear oxygen sensor connector and chassis ground. ***Connector & terminal*** ***(E25) No. 3 (+) — Chassis ground (–):***	Is the voltage 0.2 — 0.5 V?	Replace the rear oxygen sensor. <Ref. to FU(H6DO)-52, Rear Oxygen Sensor.>	Repair the harness and connector. NOTE: In this case, repair the following item: • Open circuit in harness between ECM and rear oxygen sensor connector • Poor contact of ECM connector • Poor contact of coupling connector

GETTHEMANUALS.org

FD:DTC P2099 POST CATALYST FUEL TRIM SYSTEM TOO RICH BANK 2

DTC DETECTING CONDITION:

- Detected when two consecutive driving cycles with fault occur.
- GENERAL DESCRIPTION <Ref. to GD(H6DO)-233, DTC P2099 POST CATALYST FUEL TRIM SYSTEM TOO RICH BANK 2, Diagnostic Trouble Code (DTC) Detecting Criteria.>

CAUTION:

After servicing or replacing faulty parts, perform Clear Memory Mode <Ref. to EN(H6DO)(diag)-57, OPERATION, Clear Memory Mode.>, and Inspection Mode <Ref. to EN(H6DO)(diag)-44, PROCEDURE, Inspection Mode.>.

WIRING DIAGRAM:

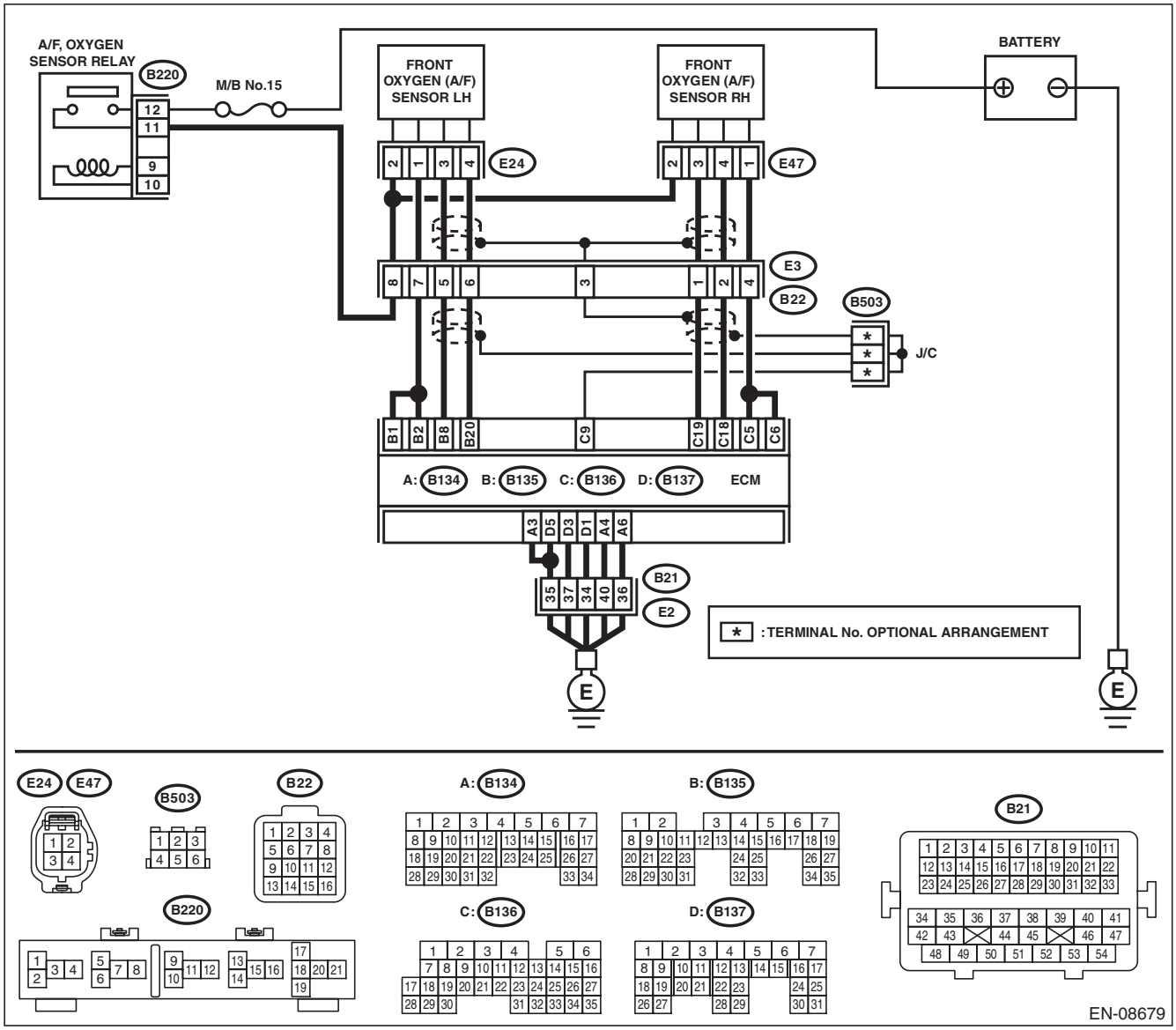

GETTHEMANUALS.org

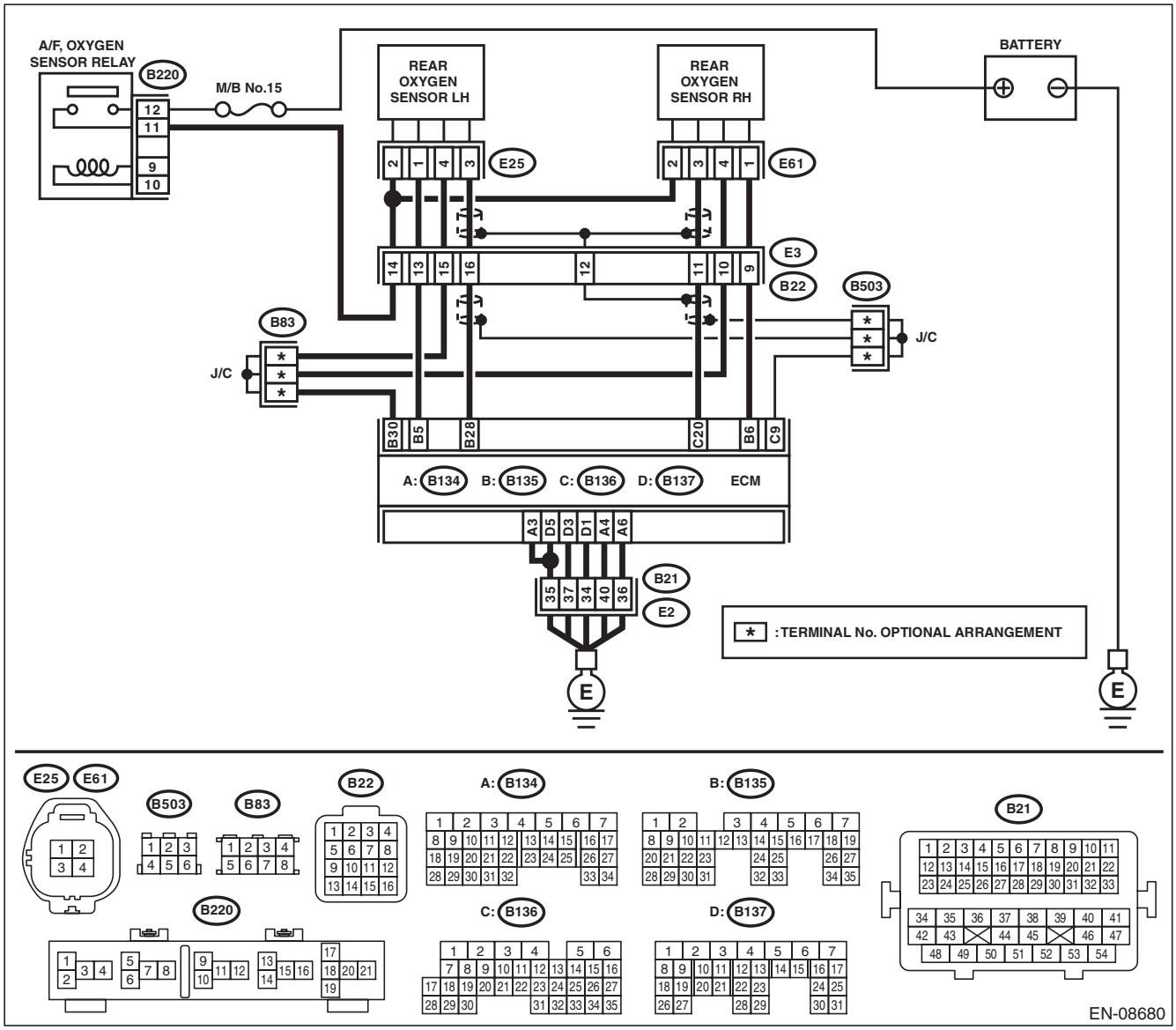

Step		Check	Yes	No
1	**CHECK FOR ANY OTHER DTC ON DISPLAY.**	Is any other DTC displayed?	Check DTC using “List of Diagnostic Trouble Code (DTC)”. <Ref. to EN(H6DO)(diag)-85, List of Diagnostic Trouble Code (DTC).>	Go to step **2**.
2	**CHECK FRONT OXYGEN (A/F) SENSOR CONNECTOR AND COUPLING CONNECTOR.**	Has water entered the connector?	Completely remove any water inside.	Go to step **3**.

GETTHEMANUALS.org

Step		Check	Yes	No
3	**CHECK HARNESS BETWEEN ECM AND FRONT OXYGEN (A/F) SENSOR CONNECTOR.** 1) Turn the ignition switch to OFF. 2) Disconnect the connectors from ECM and front oxygen (A/F) sensor. 3) Measure the resistance of harness between ECM and front oxygen (A/F) sensor connector. ***Connector & terminal*** ***(B135) No. 8 — (E24) No. 3:*** ***(B135) No. 20 — (E24) No. 4:***	Is the resistance less than 1 Ω?	Go to step **4**.	Repair the harness and connector. NOTE: In this case, repair the following item: • Open circuit in harness between ECM and front oxygen (A/F) sensor connector • Poor contact of coupling connector
4	**CHECK HARNESS BETWEEN ECM AND FRONT OXYGEN (A/F) SENSOR CONNECTOR.** Measure the resistance between ECM and chassis ground. ***Connector & terminal*** ***(B135) No. 8 — Chassis ground:*** ***(B135) No. 20 — Chassis ground:***	Is the resistance 1 MΩ or more?	Go to step **5**.	Repair the ground short circuit of harness between ECM and front oxygen (A/F) sensor connector.
5	**CHECK OUTPUT SIGNAL FOR ECM.** 1) Connect the connector to ECM. 2) Turn the ignition switch to ON. 3) Measure the voltage between front oxygen (A/F) sensor connector and chassis ground. ***Connector & terminal*** ***(E24) No. 3 (+) — Chassis ground (–):***	Is the voltage 4.5 V or more?	Go to step **7**.	Go to step **6**.
6	**CHECK OUTPUT SIGNAL FOR ECM.** Measure the voltage between front oxygen (A/F) sensor connector and chassis ground. ***Connector & terminal*** ***(E24) No. 4 (+) — Chassis ground (–):***	Is the voltage 4.95 V or more?	Go to step **7**.	Go to step **8**.
7	**CHECK OUTPUT SIGNAL FOR ECM.** Measure the voltage between front oxygen (A/F) sensor connector and chassis ground. ***Connector & terminal*** ***(E24) No. 3 (+) — Chassis ground (–):*** ***(E24) No. 4 (+) — Chassis ground (–):***	Is the voltage 8 V or more?	Repair the short circuit to power in the harness between ECM and front oxygen (A/F) sensor connector. After repair, replace the ECM. <Ref. to FU(H6DO)-54, Engine Control Module (ECM).>	Repair the poor contact of ECM connector.
8	**CHECK EXHAUST SYSTEM.**	Are there holes or loose bolts on exhaust system?	Repair the exhaust system.	Go to step **9**.
9	**CHECK AIR INTAKE SYSTEM.**	Are there holes, loose bolts or disconnection of hose on air intake system?	Repair the air intake system.	Go to step **10**.

GETTHEMANUALS.org

Step		Check	Yes	No
10	**CHECK FUEL PRESSURE.** **WARNING:** **Place "NO OPEN FLAMES" signs near the working area.** **CAUTION:** **Be careful not to spill fuel.** 1) Connect the front oxygen (A/F) sensor connector. 2) Measure the fuel pressure. <Ref. to ME(H6DO)-31, INSPECTION, Fuel Pressure.> **CAUTION:** **Release fuel pressure before removing the fuel pressure gauge.**	Is the measured value 340 — 400 kPa (3.5 — 4.1 kgf/cm^2, 49 — 58 psi)?	Go to step **11**.	Repair the following item. Fuel pressure is too high: • Clogged fuel line or bent hose Fuel pressure is too low: • Improper fuel pump discharge • Clogged fuel line
11	**CHECK ENGINE COOLANT TEMPERATURE SENSOR.** 1) Start the engine and warm up completely. 2) Read the value of «Coolant Temp.» using the Subaru Select Monitor or a general scan tool. NOTE: • Subaru Select Monitor For detailed operation procedures, refer to "READ CURRENT DATA FOR ENGINE". <Ref. to EN(H6DO)(diag)-35, Subaru Select Monitor.> • General scan tool For detailed operation procedures, refer to the general scan tool operation manual.	Is the value of «Coolant Temp.» 75°C (167°F) or more?	Go to step **12**.	Replace the engine coolant temperature sensor. <Ref. to FU(H6DO)-29, Engine Coolant Temperature Sensor.>
12	**CHECK MASS AIR FLOW AND INTAKE AIR TEMPERATURE SENSOR.** 1) Start the engine and warm up engine until coolant temperature is higher than 75°C (167°F). 2) Place the select lever in "P" range or "N" range. 3) Turn the A/C switch to OFF. 4) Turn all the accessory switches to OFF. 5) Read the value of «Mass Air Flow» using the Subaru Select Monitor or a general scan tool. NOTE: • Subaru Select Monitor For detailed operation procedures, refer to "READ CURRENT DATA FOR ENGINE". <Ref. to EN(H6DO)(diag)-35, Subaru Select Monitor.> • General scan tool For detailed operation procedures, refer to the general scan tool operation manual.	Is the value of «Mass Air Flow» 2.0 — 5.0 g/s (0.26 — 0.66 lb/m)?	Go to step **13**.	Replace the mass air flow and intake air temperature sensor. <Ref. to FU(H6DO)-41, Mass Air Flow and Intake Air Temperature Sensor.>

GETTHEMANUALS.org

	Step	Check	Yes	No
13	**CHECK MASS AIR FLOW AND INTAKE AIR TEMPERATURE SENSOR.** 1) Start the engine and warm up engine until coolant temperature is higher than 75°C (167°F). 2) Place the select lever in “P” range or “N” range. 3) Turn the A/C switch to OFF. 4) Turn all the accessory switches to OFF. 5) Open the front hood. 6) Measure the ambient temperature. 7) Read the value of «Intake Air Temp.» using the Subaru Select Monitor or a general scan tool. NOTE: • Subaru Select Monitor For detailed operation procedures, refer to “READ CURRENT DATA FOR ENGINE”. <Ref. to EN(H6DO)(diag)-35, Subaru Select Monitor.> • General scan tool For detailed operation procedures, refer to the general scan tool operation manual.	Subtract ambient temperature from «Intake Air Temp.». Is the obtained value –10 — 50°C (–18 — 90°F)?	Go to step **14**.	Check the mass air flow and intake air temperature sensor. <Ref. to FU(H6DO)-41, Mass Air Flow and Intake Air Temperature Sensor.>
14	**CHECK REAR OXYGEN SENSOR DATA.** 1) Warm up the engine until engine coolant temperature is higher than 75°C (167°F), and keep the engine speed at 3,000 rpm. (2 minutes maximum) 2) Read the value of «Front O2 Sensor #2» using the Subaru Select Monitor or a general scan tool. NOTE: • Subaru Select Monitor For detailed operation procedures, refer to “READ CURRENT DATA FOR ENGINE”. <Ref. to EN(H6DO)(diag)-35, Subaru Select Monitor.> • General scan tool For detailed operation procedures, refer to the general scan tool operation manual.	Is the value of «Front O2 Sensor #2» 0.490 V or more?	Go to step **15**.	Go to step **16**.
15	**CHECK REAR OXYGEN SENSOR DATA.** 1) Warm up the engine until engine coolant temperature is higher than 75°C (167°F), and rapidly reduce the engine speed from 3,000 rpm. 2) Read the value of «Front O2 Sensor #2» using the Subaru Select Monitor or a general scan tool. NOTE: • Subaru Select Monitor For detailed operation procedures, refer to “READ CURRENT DATA FOR ENGINE”. <Ref. to EN(H6DO)(diag)-35, Subaru Select Monitor.> • General scan tool For detailed operation procedures, refer to the general scan tool operation manual.	Is the value of «Front O2 Sensor #2» 0.250 V or less?	Go to step **17**.	Go to step **16**.
16	**CHECK REAR OXYGEN SENSOR CONNECTOR AND COUPLING CONNECTOR.**	Has water entered the connector?	Completely remove any water inside.	Go to step **18**.

GETTHEMANUALS.org

	Step	Check	Yes	No
17	**CHECK FRONT OXYGEN (A/F) SENSOR USING REAR OXYGEN SENSOR SIGNAL.** 1) Warm up the engine until engine coolant temperature is higher than 75°C (167°F), then keep the engine idling for 5 minutes or more. 2) Read the value of «Front O2 Sensor #2» using the Subaru Select Monitor or a general scan tool. NOTE: • Subaru Select Monitor For detailed operation procedures, refer to "READ CURRENT DATA FOR ENGINE". <Ref. to EN(H6DO)(diag)-35, Subaru Select Monitor.> • General scan tool For detailed operation procedures, refer to the general scan tool operation manual.	Is the value in «Front O2 Sensor #2» kept at 0.8 V or more for 5 minutes or more?	Replace the front oxygen (A/F) sensor. <Ref. to FU(H6DO)-50, Front Oxygen (A/F) Sensor.>	Go to step **18**.
18	**CHECK HARNESS BETWEEN ECM AND REAR OXYGEN SENSOR CONNECTOR.** 1) Turn the ignition switch to OFF. 2) Disconnect the connector from ECM and rear oxygen sensor. 3) Measure the resistance of harness between ECM and rear oxygen sensor connector. ***Connector & terminal*** ***(B135) No. 28 — (E25) No. 3:*** ***(B135) No. 30 — (E25) No. 4:***	Is the resistance less than 1 Ω?	Go to step **19**.	Repair the harness and connector. NOTE: In this case, repair the following item: • Open circuit in harness between ECM and rear oxygen sensor connector • Poor contact of coupling connector
19	**CHECK HARNESS BETWEEN ECM AND REAR OXYGEN SENSOR CONNECTOR.** 1) Connect the connector to ECM. 2) Turn the ignition switch to ON. 3) Measure the voltage between rear oxygen sensor connector and chassis ground. ***Connector & terminal*** ***(E25) No. 3 (+) — Chassis ground (–):***	Is the voltage 0.2 — 0.5 V?	Replace the rear oxygen sensor. <Ref. to FU(H6DO)-52, Rear Oxygen Sensor.>	Repair the harness and connector. NOTE: In this case, repair the following item: • Open circuit in harness between ECM and rear oxygen sensor connector • Poor contact of ECM connector • Poor contact of coupling connector

GETTHEMANUALS.org

FE:DTC P2101 THROTTLE ACTUATOR CONTROL MOTOR CIRCUIT RANGE/ PERFORMANCE

DTC DETECTING CONDITION:

- Immediately at fault recognition
- GENERAL DESCRIPTION <Ref. to GD(H6DO)-234, DTC P2101 THROTTLE ACTUATOR CONTROL MOTOR CIRCUIT RANGE/PERFORMANCE, Diagnostic Trouble Code (DTC) Detecting Criteria.>

TROUBLE SYMPTOM:

- Improper idling
- Poor driving performance
- Engine stalls.

CAUTION:

After servicing or replacing faulty parts, perform Clear Memory Mode <Ref. to EN(H6DO)(diag)-57, OPERATION, Clear Memory Mode.>, and Inspection Mode <Ref. to EN(H6DO)(diag)-44, PROCEDURE, Inspection Mode.>.

WIRING DIAGRAM:

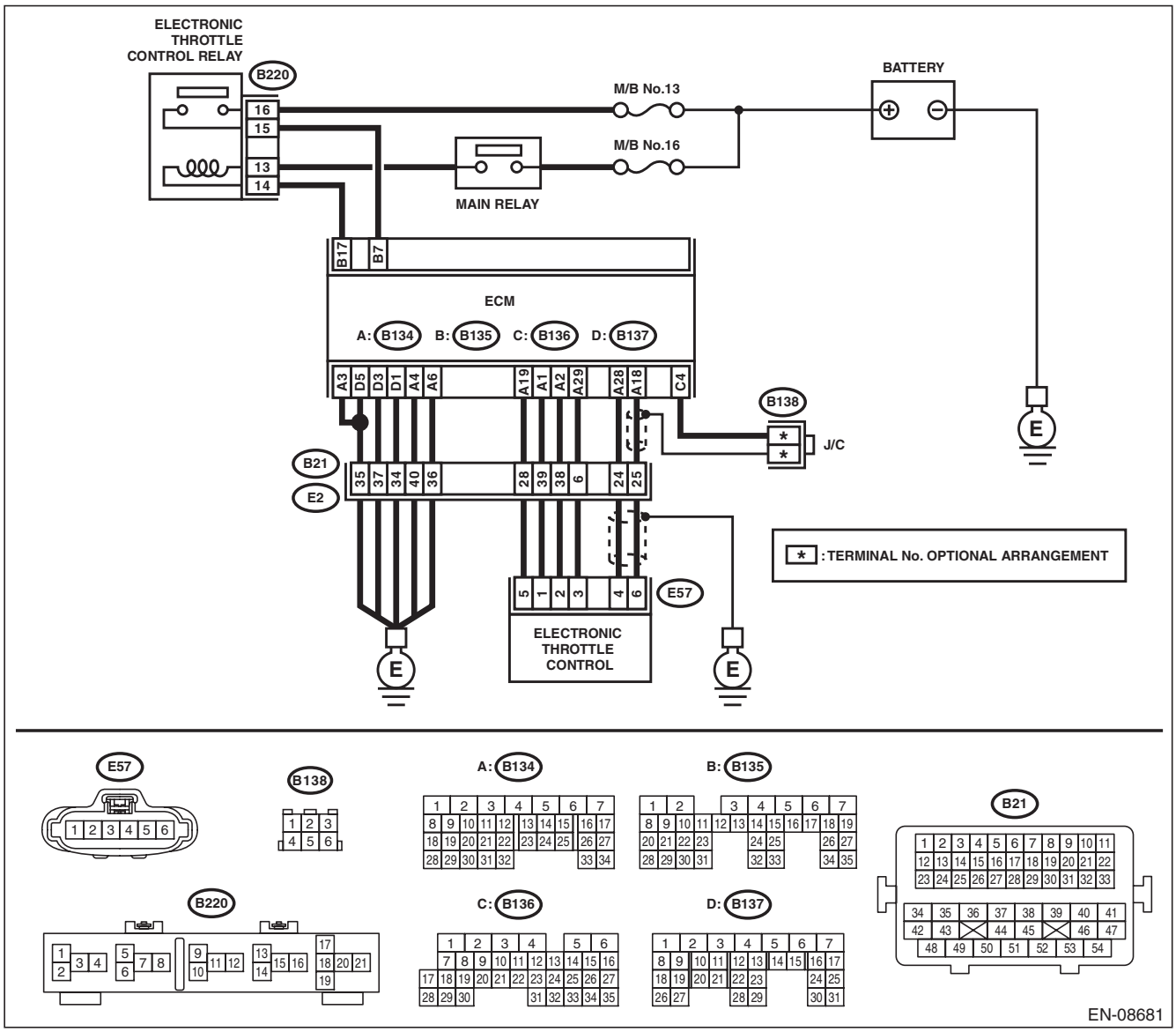

GETTHEMANUALS.org

	Step	Check	Yes	No
1	**CHECK ELECTRONIC THROTTLE CONTROL RELAY.** 1) Turn the ignition switch to OFF. 2) Remove the electronic throttle control relay. 3) Connect the battery to terminals No. 13 and No. 14 of electronic throttle control relay. 4) Measure the resistance between electronic throttle control relay terminals. ***Terminals*** ***No. 15 — No. 16:***	Is the resistance less than 1 Ω?	Go to step **2**.	Replace the electronic throttle control relay. <Ref. to EN(H6DO)(diag)-9, Electrical Component Location.>
2	**CHECK POWER SUPPLY OF ELECTRONIC THROTTLE CONTROL RELAY.** Measure the voltage between electronic throttle control relay connector and chassis ground. ***Connector & terminal*** ***(B220) No. 16 (+) — Chassis ground (–):***	Is the voltage 10 V or more?	Go to step **3**.	Repair the open or ground short circuit of power supply circuit.
3	**CHECK HARNESS BETWEEN ECM AND ELECTRONIC THROTTLE CONTROL RELAY.** 1) Disconnect the connector from ECM. 2) Turn the ignition switch to ON. 3) Measure the voltage between electronic throttle control relay connector and chassis ground. ***Connector & terminal*** ***(B220) No. 14 (+) — Chassis ground (–):***	Is the voltage 10 V or more?	Repair the short circuit to power in harness between ECM and electronic throttle control relay.	Go to step **4**.
4	**CHECK HARNESS BETWEEN ECM AND ELECTRONIC THROTTLE CONTROL RELAY.** 1) Turn the ignition switch to OFF. 2) Measure the resistance between electronic throttle control relay connector and chassis ground. ***Connector & terminal*** ***(B220) No. 14 — Chassis ground:*** ***(B220) No. 15 — Chassis ground:***	Is the resistance 1 MΩ or more?	Go to step **5**.	Repair the ground short circuit of harness between ECM and electronic throttle control relay.
5	**CHECK HARNESS BETWEEN ECM AND ELECTRONIC THROTTLE CONTROL RELAY.** Measure the resistance between ECM and electronic throttle control relay connector. ***Connector & terminal*** ***(B135) No. 7 — (B220) No. 15:*** ***(B135) No. 17 — (B220) No. 14:***	Is the resistance less than 1 Ω?	Go to step **6**.	Repair the open circuit of harness between ECM and electronic throttle control relay.
6	**CHECK HARNESS BETWEEN ECM AND ELECTRONIC THROTTLE CONTROL.** 1) Turn the ignition switch to OFF. 2) Disconnect the connectors from electronic throttle control. 3) Measure the resistance between ECM and chassis ground. ***Connector & terminal*** ***(B134) No. 19 — Chassis ground:*** ***(B134) No. 18 — Chassis ground:*** ***(B134) No. 18 — (B136) No. 4:*** ***(B134) No. 28 — Chassis ground:***	Is the resistance 1 MΩ or more?	Go to step **7**.	Repair the short circuit to ground in harness between ECM and electronic throttle control connector.

GETTHEMANUALS.org

	Step	Check	Yes	No
7	**CHECK SHORT CIRCUIT INSIDE THE ECM.** 1) Connect the connector to ECM. 2) Measure the resistance between electronic throttle control connector and engine ground. ***Connector & terminal*** ***(E57) No. 6 — Engine ground:*** ***(E57) No. 4 — Engine ground:***	Is the resistance 1 MΩ or more?	Go to step **8**.	Repair the short circuit to ground in harness between ECM and electronic throttle control connector. Replace the ECM if defective. <Ref. to FU(H6DO)-54, Engine Control Module (ECM).>
8	**CHECK HARNESS BETWEEN ECM AND ELECTRONIC THROTTLE CONTROL.** 1) Disconnect the connector from ECM. 2) Measure the resistance of harness between ECM and electronic throttle control connector. ***Connector & terminal*** ***(B134) No. 18 — (E57) No. 6:*** ***(B134) No. 28 — (E57) No. 4:*** ***(B134) No. 29 — (E57) No. 3:***	Is the resistance less than 1 Ω?	Go to step **9**.	Repair the harness and connector. NOTE: In this case, repair the following item: • Open circuit in harness between ECM and electronic throttle control connector • Poor contact of coupling connector
9	**CHECK HARNESS BETWEEN ECM AND ELECTRONIC THROTTLE CONTROL.** 1) Connect the connector to ECM. 2) Measure the resistance between electronic throttle control connector and engine ground. ***Connector & terminal*** ***(E57) No. 3 — Engine ground:***	Is the resistance less than 5 Ω?	Go to step **10**.	Repair the harness and connector. NOTE: In this case, repair the following item: • Open circuit of harness between ECM and engine ground • Poor contact of ECM connector • Poor contact of coupling connector
10	**CHECK HARNESS BETWEEN ECM AND ELECTRONIC THROTTLE CONTROL.** 1) Turn the ignition switch to ON. 2) Measure the voltage between electronic throttle control connector and engine ground. ***Connector & terminal*** ***(E57) No. 6 (+) — Engine ground (–):*** ***(E57) No. 4 (+) — Engine ground (–):***	Is the voltage 5 V or more?	Repair the short circuit to power in harness between ECM and electronic throttle control connector.	Go to step **11**.
11	**CHECK HARNESS BETWEEN ECM AND ELECTRONIC THROTTLE CONTROL.** 1) Turn the ignition switch to OFF. 2) Disconnect the connector from ECM. 3) Measure the resistance between ECM connectors. ***Connector & terminal*** ***(B134) No. 19 — (B134) No. 18:*** ***(B134) No. 19 — (B134) No. 28:***	Is the resistance 1 MΩ or more?	Go to step **12**.	Repair the short circuit to power in harness between ECM and electronic throttle control connector.

GETTHEMANUALS.org

	Step	Check	Yes	No
12	**CHECK SENSOR OUTPUT.** 1) Connect all connectors. 2) Turn the ignition switch to ON. 3) Read the value of «Main-Throttle Sensor» using Subaru Select Monitor. NOTE: For detailed operation procedures, refer to "READ CURRENT DATA FOR ENGINE". <Ref. to EN(H6DO)(diag)-35, Subaru Select Monitor.>	Is the value of «Main-Throttle Sensor» 0.81 — 0.87 V?	Go to step **13**.	Repair the poor contact of electronic throttle control connector. Replace the electronic throttle control if defective. <Ref. to FU(H6DO)-19, Throttle Body.>
13	**CHECK SENSOR OUTPUT.** Read the value of «Sub-Throttle Sensor» using Subaru Select Monitor. NOTE: For detailed operation procedures, refer to "READ CURRENT DATA FOR ENGINE". <Ref. to EN(H6DO)(diag)-35, Subaru Select Monitor.>	Is the value of «Sub-Throttle Sensor» 1.64 — 1.70 V?	Go to step **14**.	Repair the poor contact of electronic throttle control connector. Replace the electronic throttle control if defective. <Ref. to FU(H6DO)-19, Throttle Body.>
14	**CHECK HARNESS BETWEEN ECM AND ELECTRONIC THROTTLE CONTROL MOTOR.** 1) Turn the ignition switch to OFF. 2) Disconnect the connectors from ECM and electronic throttle control. 3) Measure the resistance between ECM and electronic throttle control connector. ***Connector & terminal*** ***(B134) No. 1 — (E57) No. 1:*** ***(B134) No. 2 — (E57) No. 2:***	Is the resistance less than 1 Ω?	Go to step **15**.	Repair the harness and connector. NOTE: In this case, repair the following item: • Open circuit in harness between ECM and electronic throttle control • Poor contact of coupling connector
15	**CHECK HARNESS BETWEEN ECM AND ELECTRONIC THROTTLE CONTROL MOTOR.** 1) Connect the connector to ECM. 2) Turn the ignition switch to ON. 3) Measure the voltage between electronic throttle control connector and engine ground. ***Connector & terminal*** ***(E57) No. 2 (+) — Engine ground (–):*** ***(E57) No. 1 (+) — Engine ground (–):***	Is the voltage 5 V or more?	Repair the short circuit to power in the harness between ECM and electronic throttle control.	Go to step **16**.
16	**CHECK HARNESS BETWEEN ECM AND ELECTRONIC THROTTLE CONTROL MOTOR.** 1) Turn the ignition switch to OFF. 2) Disconnect the connector from ECM. 3) Measure the resistance between electronic throttle control connector and engine ground. ***Connector & terminal*** ***(E57) No. 2 — Engine ground:*** ***(E57) No. 1 — Engine ground:***	Is the resistance 1 MΩ or more?	Go to step **17**.	Repair the short circuit to ground in harness between ECM and electronic throttle control.
17	**CHECK ELECTRONIC THROTTLE CONTROL MOTOR HARNESS.** Measure the resistance between electronic throttle control connectors. ***Connector & terminal*** ***(E57) No. 2 — (E57) No. 1:***	Is the resistance 1 MΩ or more?	Go to step **18**.	Repair the short circuit of harness between ECM and electronic throttle control.

GETthemMANUALS.org

Step		Check	Yes	No
18	**CHECK ELECTRONIC THROTTLE CONTROL GROUND CIRCUIT.** Measure the resistance between ECM and chassis ground. ***Connector & terminal*** ***(B134) No. 3 — Chassis ground:*** ***(B134) No. 4 — Chassis ground:*** ***(B134) No. 6 — Chassis ground:*** ***(B137) No. 1 — Chassis ground:*** ***(B137) No. 3 — Chassis ground:*** ***(B137) No. 5 — Chassis ground:***	Is the resistance less than 5 Ω?	Go to step **19**.	Repair the harness and connector. NOTE: In this case, repair the following item: • Open circuit of harness between ECM and engine ground • Poor contact of coupling connector
19	**CHECK ELECTRONIC THROTTLE CONTROL.** Measure the resistance between electronic throttle control terminals. ***Terminals*** ***No. 2 — No. 1:***	Is the resistance 50 Ω or less?	Go to step **20**.	Replace the electronic throttle control. <Ref. to FU(H6DO)-19, Throttle Body.>
20	**CHECK ELECTRONIC THROTTLE CONTROL.** Move the throttle valve to the fully open and fully closed positions with fingers. Check that the valve returns to the specified position when releasing fingers.	Does the valve return to the specified position? Standard value: 3 mm (0.12 in) from fully closed position	Repair the poor contact of ECM connector.	Replace the electronic throttle control. <Ref. to FU(H6DO)-19, Throttle Body.>

GETTHEMANUALS.org

FF: DTC P2102 THROTTLE ACTUATOR CONTROL MOTOR CIRCUIT LOW

DTC DETECTING CONDITION:

- Immediately at fault recognition
- GENERAL DESCRIPTION <Ref. to GD(H6DO)-236, DTC P2102 THROTTLE ACTUATOR CONTROL MOTOR CIRCUIT LOW, Diagnostic Trouble Code (DTC) Detecting Criteria.>

TROUBLE SYMPTOM:

- Improper idling
- Poor driving performance
- Engine stalls.

CAUTION:

After servicing or replacing faulty parts, perform Clear Memory Mode <Ref. to EN(H6DO)(diag)-57, OPERATION, Clear Memory Mode.>, and Inspection Mode <Ref. to EN(H6DO)(diag)-44, PROCEDURE, Inspection Mode.>.

WIRING DIAGRAM:

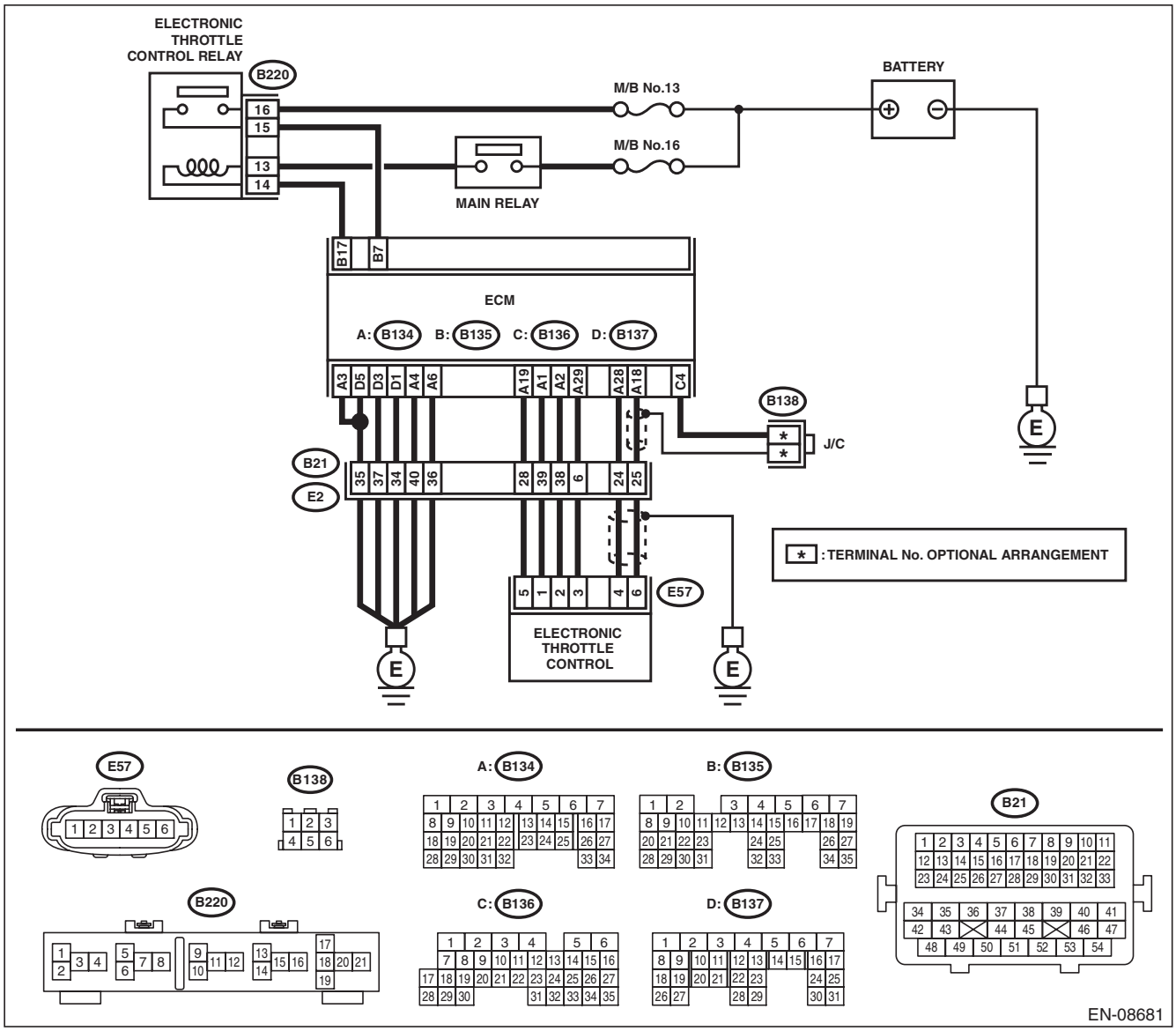

GETTHEMANUALS.org

	Step	Check	Yes	No
1	**CHECK ELECTRONIC THROTTLE CONTROL RELAY.** 1) Turn the ignition switch to OFF. 2) Remove the electronic throttle control relay. 3) Connect the battery to terminals No. 13 and No. 14 of electronic throttle control relay. 4) Measure the resistance between electronic throttle control relay terminals. ***Terminals*** ***No. 15 — No. 16:***	Is the resistance less than 1 Ω?	Go to step **2**.	Replace the electronic throttle control relay. <Ref. to EN(H6DO)(diag)-9, Electrical Component Location.>
2	**CHECK POWER SUPPLY OF ELECTRONIC THROTTLE CONTROL RELAY.** Measure the voltage between electronic throttle control relay connector and chassis ground. ***Connector & terminal*** ***(B220) No. 16 (+) — Chassis ground (–):***	Is the voltage 10 V or more?	Go to step **3**.	Repair the open or ground short circuit of power supply circuit.
3	**CHECK HARNESS BETWEEN ECM AND ELECTRONIC THROTTLE CONTROL RELAY.** 1) Disconnect the connectors from ECM. 2) Turn the ignition switch to ON. 3) Measure the voltage between electronic throttle control relay connector and chassis ground. ***Connector & terminal*** ***(B220) No. 14 (+) — Chassis ground (–):***	Is the voltage 10 V or more?	Repair the short circuit to power in harness between ECM and electronic throttle control relay.	Go to step **4**.
4	**CHECK HARNESS BETWEEN ECM AND ELECTRONIC THROTTLE CONTROL RELAY.** 1) Turn the ignition switch to OFF. 2) Measure the resistance between electronic throttle control relay connector and chassis ground. ***Connector & terminal*** ***(B220) No. 14 — Chassis ground:*** ***(B220) No. 15 — Chassis ground:***	Is the resistance 1 MΩ or more?	Go to step **5**.	Repair the ground short circuit of harness between ECM and electronic throttle control relay.
5	**CHECK HARNESS BETWEEN ECM AND ELECTRONIC THROTTLE CONTROL RELAY.** Measure the resistance between ECM and electronic throttle control relay connector. ***Connector & terminal*** ***(B135) No. 7 — (B220) No. 15:*** ***(B135) No. 17 — (B220) No. 14:***	Is the resistance less than 1 Ω?	Repair the poor contact of ECM connector.	Repair the open circuit of harness between ECM and electronic throttle control relay.

GETTHEMANUALS.org

FG:DTC P2103 THROTTLE ACTUATOR CONTROL MOTOR CIRCUIT HIGH

DTC DETECTING CONDITION:

- Immediately at fault recognition
- GENERAL DESCRIPTION <Ref. to GD(H6DO)-238, DTC P2103 THROTTLE ACTUATOR CONTROL MOTOR CIRCUIT HIGH, Diagnostic Trouble Code (DTC) Detecting Criteria.>

CAUTION:

After servicing or replacing faulty parts, perform Clear Memory Mode <Ref. to EN(H6DO)(diag)-57, OPERATION, Clear Memory Mode.>, and Inspection Mode <Ref. to EN(H6DO)(diag)-44, PROCEDURE, Inspection Mode.>.

WIRING DIAGRAM:

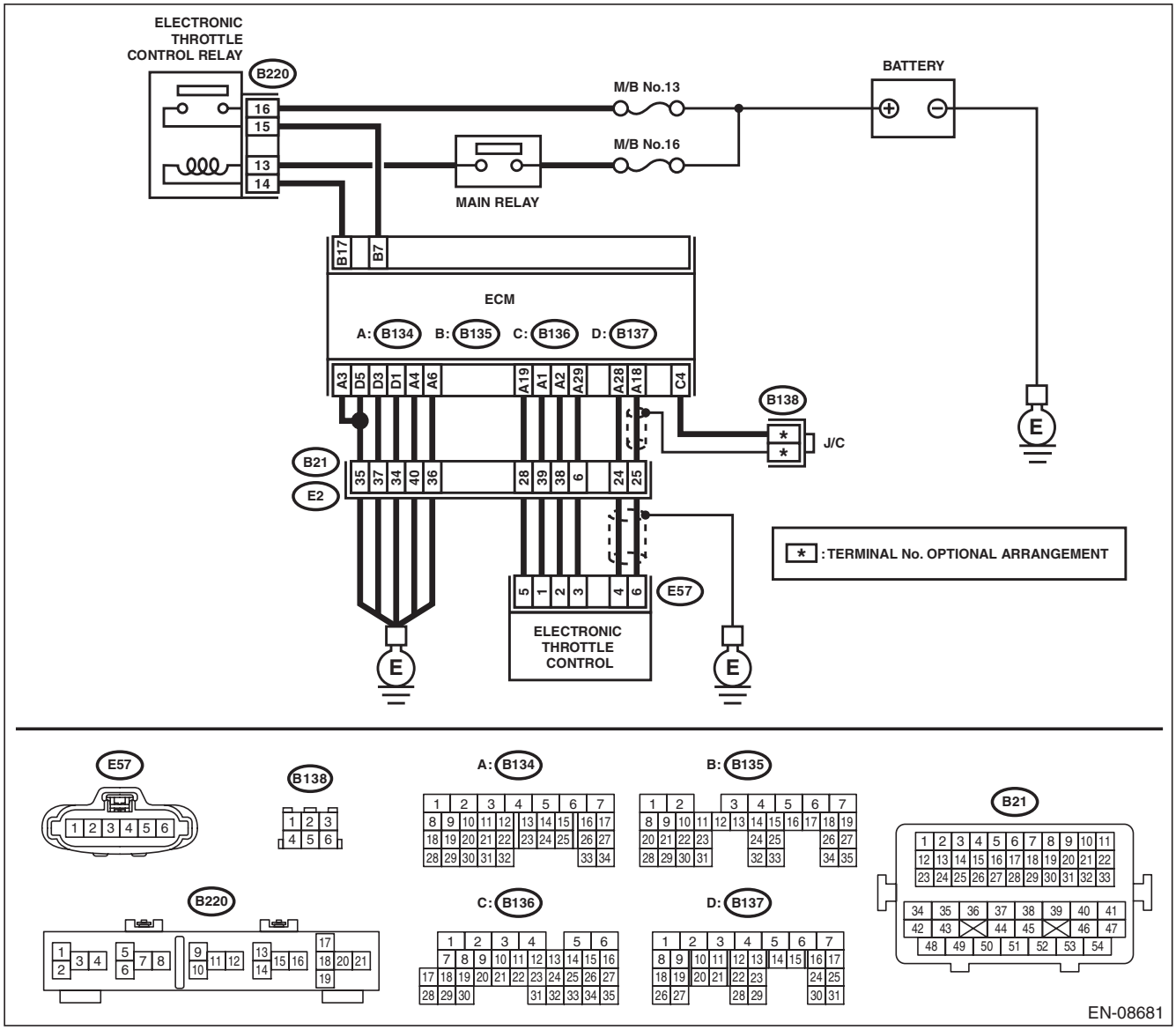

GETTHEMANUALS.org

Step		Check	Yes	No
1	**CHECK ELECTRONIC THROTTLE CONTROL RELAY.** 1) Turn the ignition switch to OFF. 2) Remove the electronic throttle control relay. 3) Measure the resistance between electronic throttle control relay terminals. ***Terminals*** ***No. 15 — No. 16:***	Is the resistance 1 MΩ or more?	Go to step **2**.	Replace the electronic throttle control relay. <Ref. to EN(H6DO)(diag)-9, Electrical Component Location.>
2	**CHECK SHORT CIRCUIT OF ELECTRONIC THROTTLE CONTROL RELAY POWER SUPPLY.** 1) Turn the ignition switch to ON. 2) Measure the voltage between electronic throttle control relay connector and chassis ground. ***Connector & terminal*** ***(B220) No. 15 (+) — Chassis ground (–):***	Is the voltage 10 V or more?	Repair the short circuit to power in harness between ECM and electronic throttle control relay.	Go to step **3**.
3	**CHECK HARNESS BETWEEN ECM AND ELECTRONIC THROTTLE CONTROL RELAY.** 1) Turn the ignition switch to OFF. 2) Disconnect the connectors from ECM. 3) Measure the resistance between ECM and chassis ground. ***Connector & terminal*** ***(B135) No. 17 — Chassis ground:***	Is the resistance 1 MΩ or more?	Repair the poor contact of ECM connector.	Repair the ground short circuit of harness between ECM and electronic throttle control relay.

FH:DTC P2109 THROTTLE/PEDAL POSITION SENSOR “A” MINIMUM STOP PERFORMANCE

NOTE:
For the diagnostic procedure, refer to DTC P2101. <Ref. to EN(H6DO)(diag)-336, DTC P2101 THROTTLE ACTUATOR CONTROL MOTOR CIRCUIT RANGE/PERFORMANCE, Diagnostic Procedure with Diagnostic Trouble Code (DTC).>

GETTHEMANUALS.org

FI: DTC P2122 THROTTLE/PEDAL POSITION SENSOR/SWITCH “D” CIRCUIT LOW INPUT

DTC DETECTING CONDITION:

- Immediately at fault recognition
- GENERAL DESCRIPTION <Ref. to GD(H6DO)-242, DTC P2122 THROTTLE/PEDAL POSITION SENSOR/SWITCH “D” CIRCUIT LOW INPUT, Diagnostic Trouble Code (DTC) Detecting Criteria.>

TROUBLE SYMPTOM:

- Improper idling
- Poor driving performance

CAUTION:

After servicing or replacing faulty parts, perform Clear Memory Mode <Ref. to EN(H6DO)(diag)-57, OPERATION, Clear Memory Mode.>, and Inspection Mode <Ref. to EN(H6DO)(diag)-44, PROCEDURE, Inspection Mode.>.

WIRING DIAGRAM:

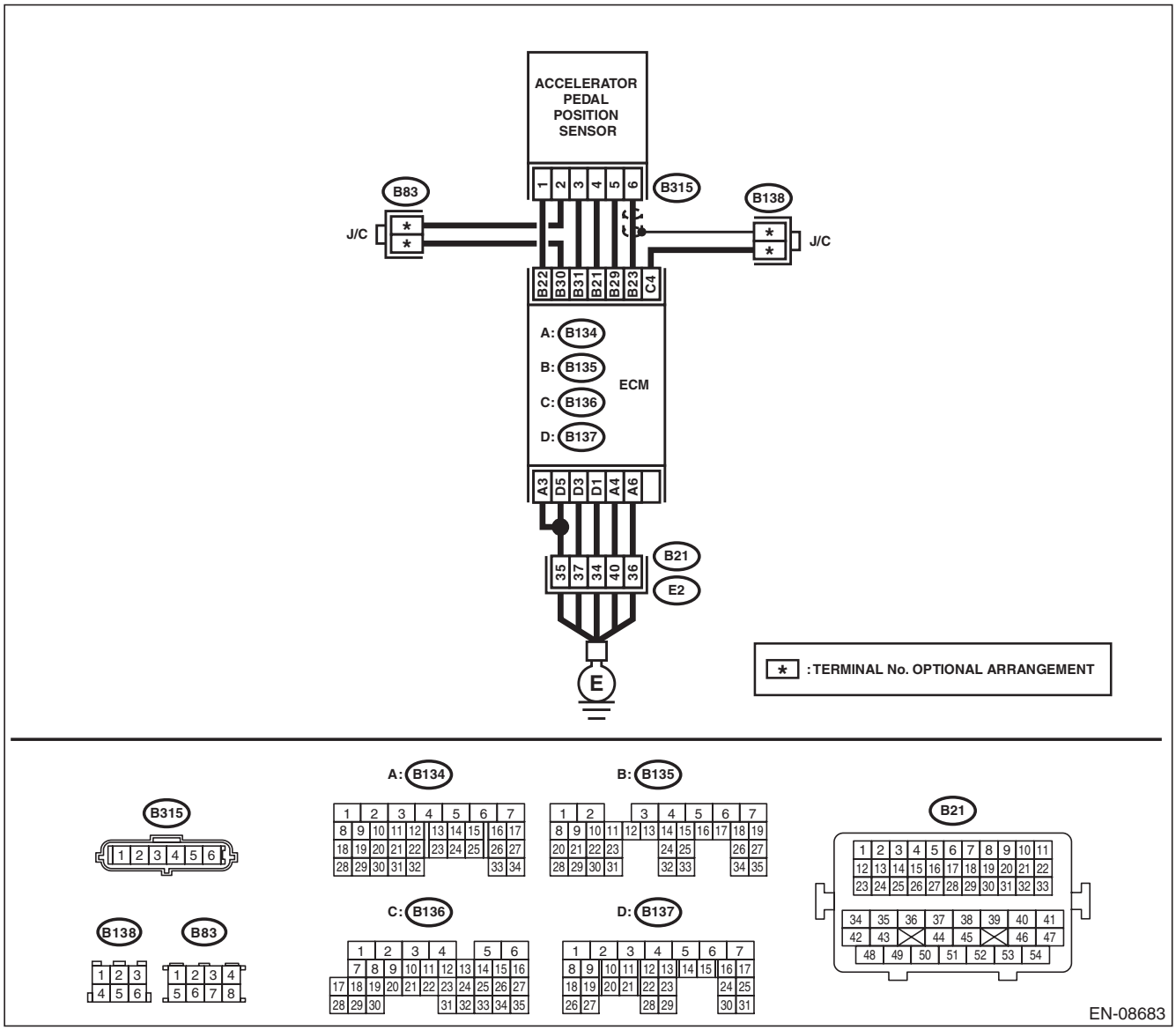

GETTHEMANUALS.org

	Step	Check	Yes	No
1	**CHECK HARNESS BETWEEN ECM AND ACCELERATOR PEDAL POSITION SENSOR CONNECTOR.** 1) Turn the ignition switch to OFF. 2) Disconnect the connectors from ECM and accelerator pedal position sensor. 3) Measure the resistance between ECM and chassis ground. ***Connector & terminal*** ***(B135) No. 21 — Chassis ground:*** ***(B135) No. 23 — Chassis ground:*** ***(B135) No. 23 — (B136) No. 4:***	Is the resistance 1 MΩ or more?	Go to step **2**.	Repair the short circuit to ground in harness between ECM and accelerator pedal position sensor connector.
2	**CHECK SHORT CIRCUIT INSIDE THE ECM.** 1) Connect the connector to ECM. 2) Measure the resistance between accelerator pedal position sensor connector and chassis ground. ***Connector & terminal*** ***(B315) No. 6 — Chassis ground:***	Is the resistance 1 MΩ or more?	Replace the accelerator pedal. <Ref. to SP(H4SO)-4, Accelerator Pedal.>	Repair the short circuit to ground in harness between ECM and accelerator pedal position sensor connector. Replace the ECM if defective. <Ref. to FU(H6DO)-54, Engine Control Module (ECM).>

GETTHEMANUALS.org

FJ: DTC P2123 THROTTLE/PEDAL POSITION SENSOR/SWITCH “D” CIRCUIT HIGH INPUT

DTC DETECTING CONDITION:

- Immediately at fault recognition
- GENERAL DESCRIPTION <Ref. to GD(H6DO)-244, DTC P2123 THROTTLE/PEDAL POSITION SENSOR/SWITCH “D” CIRCUIT HIGH INPUT, Diagnostic Trouble Code (DTC) Detecting Criteria.>

TROUBLE SYMPTOM:

- Improper idling
- Poor driving performance

CAUTION:

After servicing or replacing faulty parts, perform Clear Memory Mode <Ref. to EN(H6DO)(diag)-57, OPERATION, Clear Memory Mode.>, and Inspection Mode <Ref. to EN(H6DO)(diag)-44, PROCEDURE, Inspection Mode.>.

WIRING DIAGRAM:

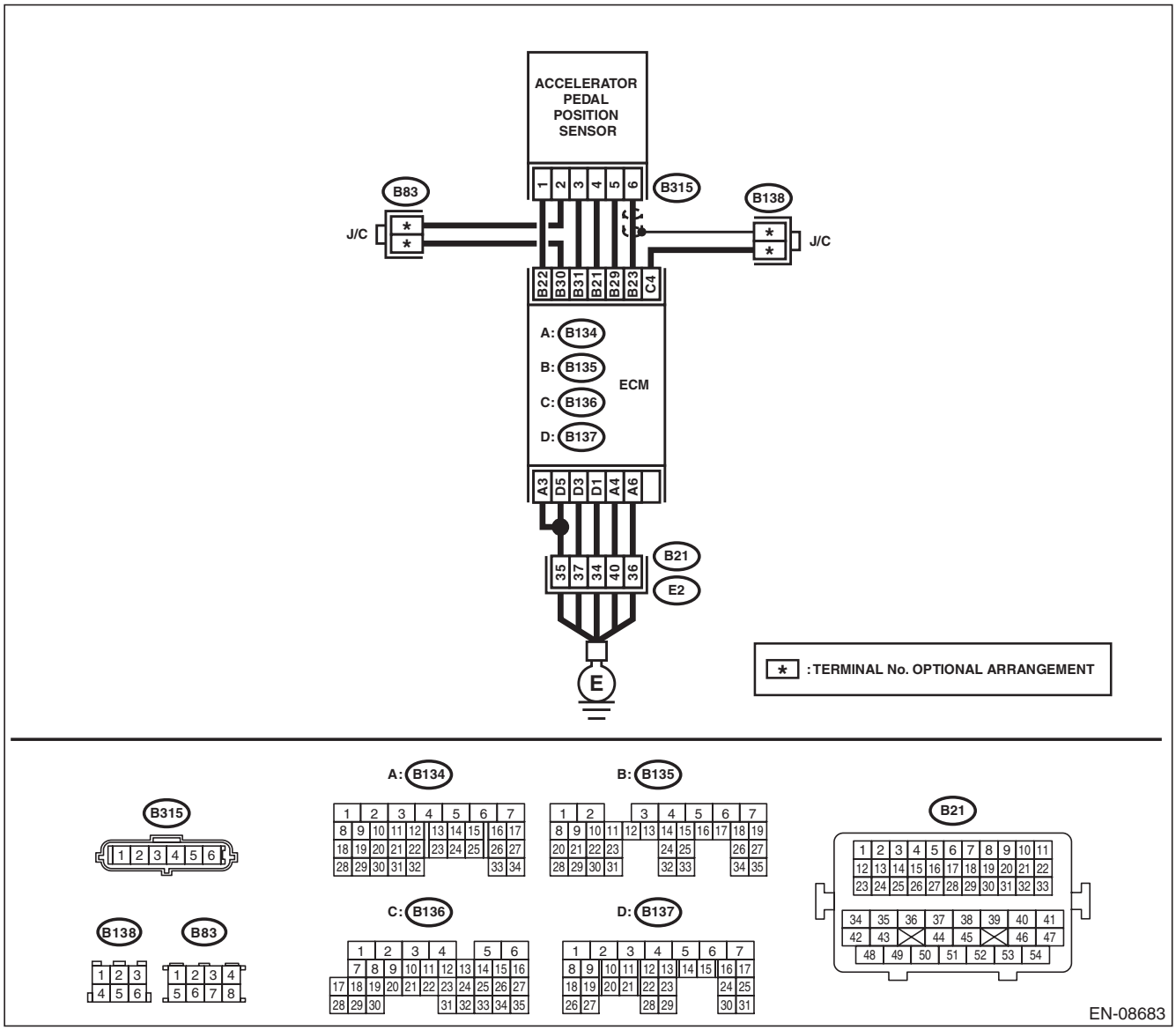

GETTHEMANUALS.org

	Step	Check	Yes	No
1	**CHECK HARNESS BETWEEN ECM AND ACCELERATOR PEDAL POSITION SENSOR CONNECTOR.** 1) Turn the ignition switch to OFF. 2) Disconnect the connectors from ECM and accelerator pedal position sensor. 3) Measure the resistance of harness between ECM and accelerator pedal position sensor connector. ***Connector & terminal*** ***(B135) No. 23 — (B315) No. 6:*** ***(B135) No. 29 — (B315) No. 5:***	Is the resistance less than 1 Ω?	Go to step **2**.	Repair the open circuit in harness between ECM and accelerator pedal position sensor connector.
2	**CHECK HARNESS BETWEEN ECM AND ACCELERATOR PEDAL POSITION SENSOR CONNECTOR.** 1) Connect the connector to ECM. 2) Measure the resistance between accelerator pedal position sensor connector and chassis ground. ***Connector & terminal*** ***(B315) No. 5 — Chassis ground:***	Is the resistance less than 5 Ω?	Go to step **3**.	Repair the harness and connector. NOTE: In this case, repair the following item: • Open circuit of harness between ECM and engine ground • Poor contact of ECM connector • Poor contact of coupling connector
3	**CHECK HARNESS BETWEEN ECM AND ACCELERATOR PEDAL POSITION SENSOR CONNECTOR.** 1) Turn the ignition switch to ON. 2) Measure the voltage between accelerator pedal position sensor connector and chassis ground. ***Connector & terminal*** ***(B315) No. 6 (+) — Chassis ground (–):***	Is the voltage 5 V or more?	Repair the short circuit to power supply in the harness between the ECM and accelerator pedal position sensor connector.	Go to step **4**.
4	**CHECK HARNESS BETWEEN ECM AND ACCELERATOR PEDAL POSITION SENSOR CONNECTOR.** 1) Turn the ignition switch to OFF. 2) Disconnect the connectors from ECM. 3) Measure the resistance between ECM connectors. ***Connector & terminal*** ***(B135) No. 21 — (B135) No. 23:***	Is the resistance 1 MΩ or more?	Repair the poor contact of accelerator pedal position sensor connector. Replace the accelerator pedal if defective. <Ref. to SP(H4SO)-4, Accelerator Pedal.>	Repair the short circuit to power supply in the harness between the ECM and accelerator pedal position sensor connector.

GETTHEMANUALS.org

FK:DTC P2127 THROTTLE/PEDAL POSITION SENSOR/SWITCH “E” CIRCUIT LOW INPUT

DTC DETECTING CONDITION:

- Immediately at fault recognition
- GENERAL DESCRIPTION <Ref. to GD(H6DO)-246, DTC P2127 THROTTLE/PEDAL POSITION SENSOR/SWITCH “E” CIRCUIT LOW INPUT, Diagnostic Trouble Code (DTC) Detecting Criteria.>

TROUBLE SYMPTOM:

- Improper idling
- Poor driving performance

CAUTION:

After servicing or replacing faulty parts, perform Clear Memory Mode <Ref. to EN(H6DO)(diag)-57, OPERATION, Clear Memory Mode.>, and Inspection Mode <Ref. to EN(H6DO)(diag)-44, PROCEDURE, Inspection Mode.>.

WIRING DIAGRAM:

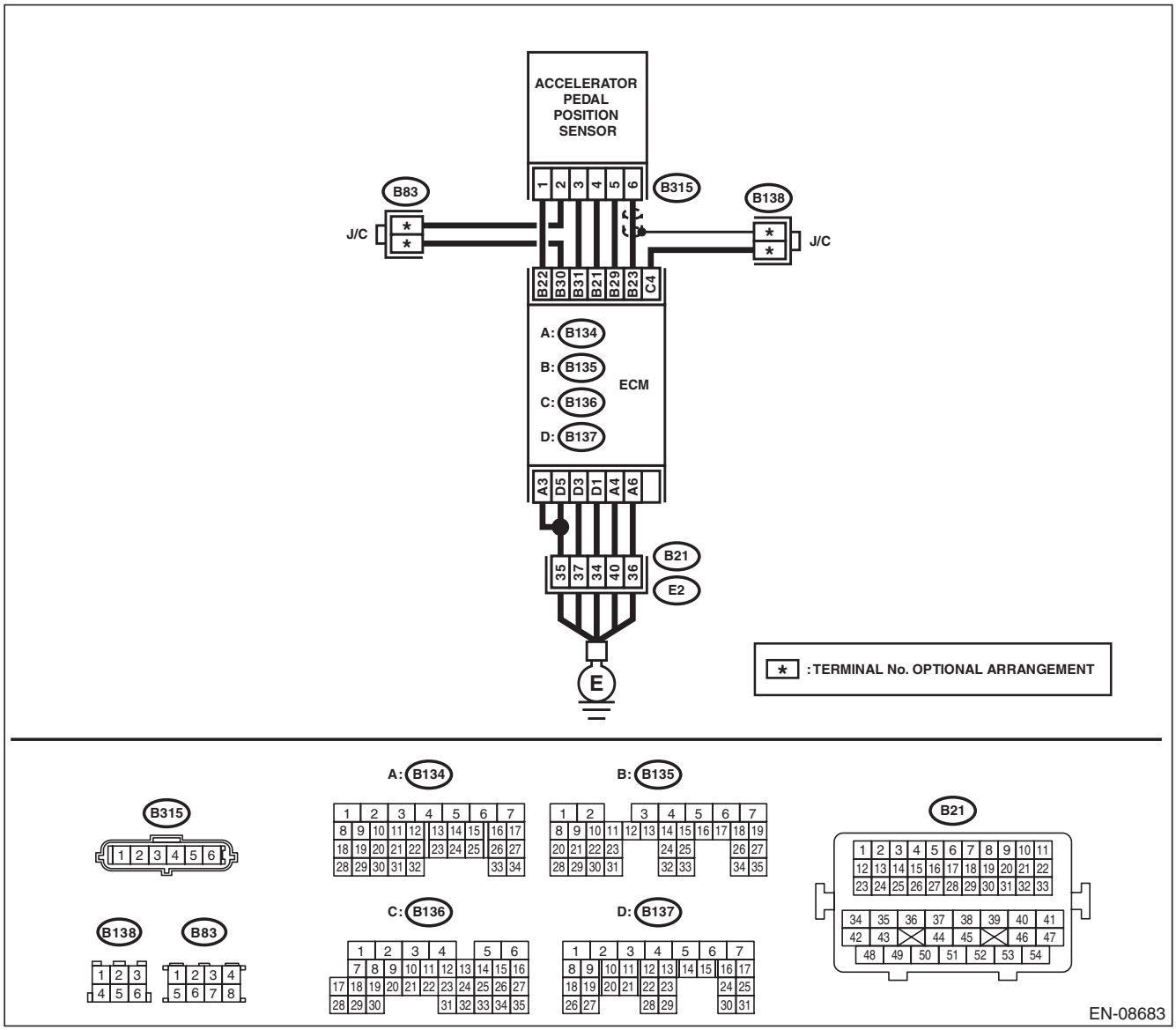

GETTHEMANUALS.org

Step		Check	Yes	No
1	**CHECK HARNESS BETWEEN ECM AND ACCELERATOR PEDAL POSITION SENSOR CONNECTOR.** 1) Turn the ignition switch to OFF. 2) Disconnect the connectors from ECM and accelerator pedal position sensor. 3) Measure the resistance between ECM and chassis ground. ***Connector & terminal*** ***(B135) No. 22 — Chassis ground:*** ***(B135) No. 31 — Chassis ground:***	Is the resistance 1 MΩ or more?	Go to step **2**.	Repair the short circuit to ground in harness between ECM and accelerator pedal position sensor connector.
2	**CHECK SHORT CIRCUIT INSIDE THE ECM.** 1) Connect the connector to ECM. 2) Measure the resistance between accelerator pedal position sensor connector and chassis ground. ***Connector & terminal*** ***(B315) No. 3 — Chassis ground:***	Is the resistance 1 MΩ or more?	Replace the accelerator pedal. <Ref. to SP(H4SO)-4, Accelerator Pedal.>	Repair the short circuit to ground in harness between ECM and accelerator pedal position sensor connector. Replace the ECM if defective. <Ref. to FU(H6DO)-54, Engine Control Module (ECM).>

GETTHEMANUALS.org

FL: DTC P2128 THROTTLE/PEDAL POSITION SENSOR/SWITCH “E” CIRCUIT HIGH INPUT

DTC DETECTING CONDITION:

- Immediately at fault recognition
- GENERAL DESCRIPTION <Ref. to GD(H6DO)-248, DTC P2128 THROTTLE/PEDAL POSITION SENSOR/SWITCH “E” CIRCUIT HIGH INPUT, Diagnostic Trouble Code (DTC) Detecting Criteria.>

TROUBLE SYMPTOM:

- Improper idling
- Poor driving performance

CAUTION:

After servicing or replacing faulty parts, perform Clear Memory Mode <Ref. to EN(H6DO)(diag)-57, OPERATION, Clear Memory Mode.>, and Inspection Mode <Ref. to EN(H6DO)(diag)-44, PROCEDURE, Inspection Mode.>.

WIRING DIAGRAM:

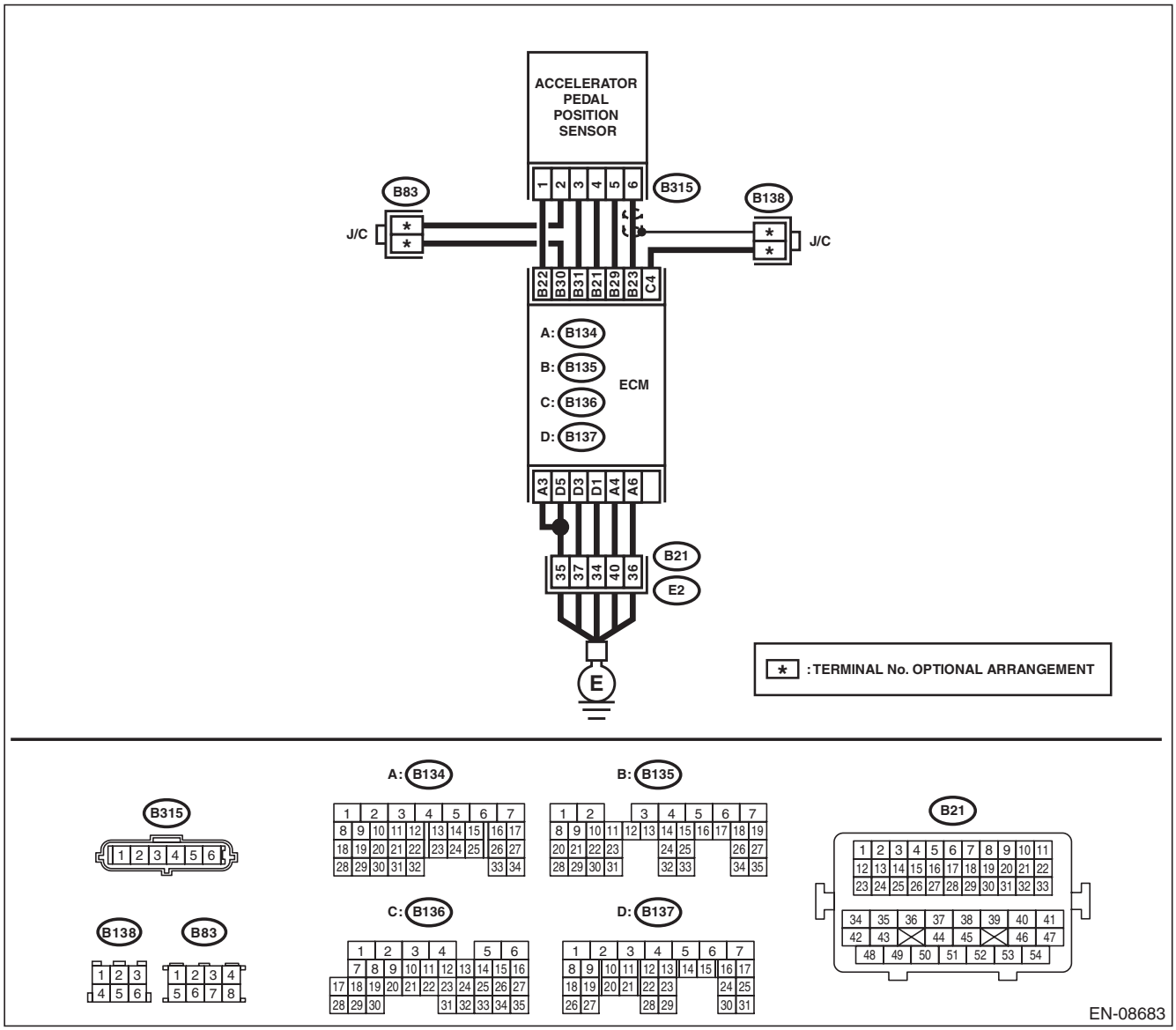

GETTHEMANUALS.org

	Step	Check	Yes	No
1	**CHECK HARNESS BETWEEN ECM AND ACCELERATOR PEDAL POSITION SENSOR CONNECTOR.** 1) Turn the ignition switch to OFF. 2) Disconnect the connectors from ECM and accelerator pedal position sensor. 3) Measure the resistance of harness between ECM and accelerator pedal position sensor connector. ***Connector & terminal*** ***(B135) No. 31 — (B315) No. 3:*** ***(B135) No. 30 — (B315) No. 2:***	Is the resistance less than 1 Ω?	Go to step **2**.	Repair the open circuit in harness between ECM and accelerator pedal position sensor connector.
2	**CHECK HARNESS BETWEEN ECM AND ACCELERATOR PEDAL POSITION SENSOR CONNECTOR.** 1) Connect the connector to ECM. 2) Measure the resistance between accelerator pedal position sensor connector and chassis ground. ***Connector & terminal*** ***(B315) No. 2 — Chassis ground:***	Is the resistance less than 5 Ω?	Go to step **3**.	Repair the harness and connector. NOTE: In this case, repair the following item: • Open circuit of harness between ECM and engine ground • Poor contact of ECM connector • Poor contact of coupling connector
3	**CHECK HARNESS BETWEEN ECM AND ACCELERATOR PEDAL POSITION SENSOR CONNECTOR.** 1) Turn the ignition switch to ON. 2) Measure the voltage between accelerator pedal position sensor connector and chassis ground. ***Connector & terminal*** ***(B315) No. 3 (+) — Chassis ground (–):***	Is the voltage 5 V or more?	Repair the short circuit to power supply in the harness between the ECM and accelerator pedal position sensor connector.	Go to step **4**.
4	**CHECK HARNESS BETWEEN ECM AND ACCELERATOR PEDAL POSITION SENSOR CONNECTOR.** 1) Turn the ignition switch to OFF. 2) Disconnect the connectors from ECM. 3) Measure the resistance between ECM connectors. ***Connector & terminal*** ***(B135) No. 22 — (B135) No. 31:***	Is the resistance 1 MΩ or more?	Repair the poor contact of accelerator pedal position sensor connector. Replace the accelerator pedal if defective. <Ref. to SP(H4SO)-4, Accelerator Pedal.>	Repair the short circuit to power supply in the harness between the ECM and accelerator pedal position sensor connector.

GETTHEMANUALS.org

FM:DTC P2135 THROTTLE/PEDAL POSITION SENSOR/SWITCH “A”/“B” VOLTAGE CORRELATION

DTC DETECTING CONDITION:

- Immediately at fault recognition
- GENERAL DESCRIPTION <Ref. to GD(H6DO)-250, DTC P2135 THROTTLE/PEDAL POSITION SENSOR/SWITCH “A”/“B” VOLTAGE CORRELATION, Diagnostic Trouble Code (DTC) Detecting Criteria.>

TROUBLE SYMPTOM:

- Improper idling
- Poor driving performance

CAUTION:

After servicing or replacing faulty parts, perform Clear Memory Mode <Ref. to EN(H6DO)(diag)-57, OPERATION, Clear Memory Mode.>, and Inspection Mode <Ref. to EN(H6DO)(diag)-44, PROCEDURE, Inspection Mode.>.

WIRING DIAGRAM:

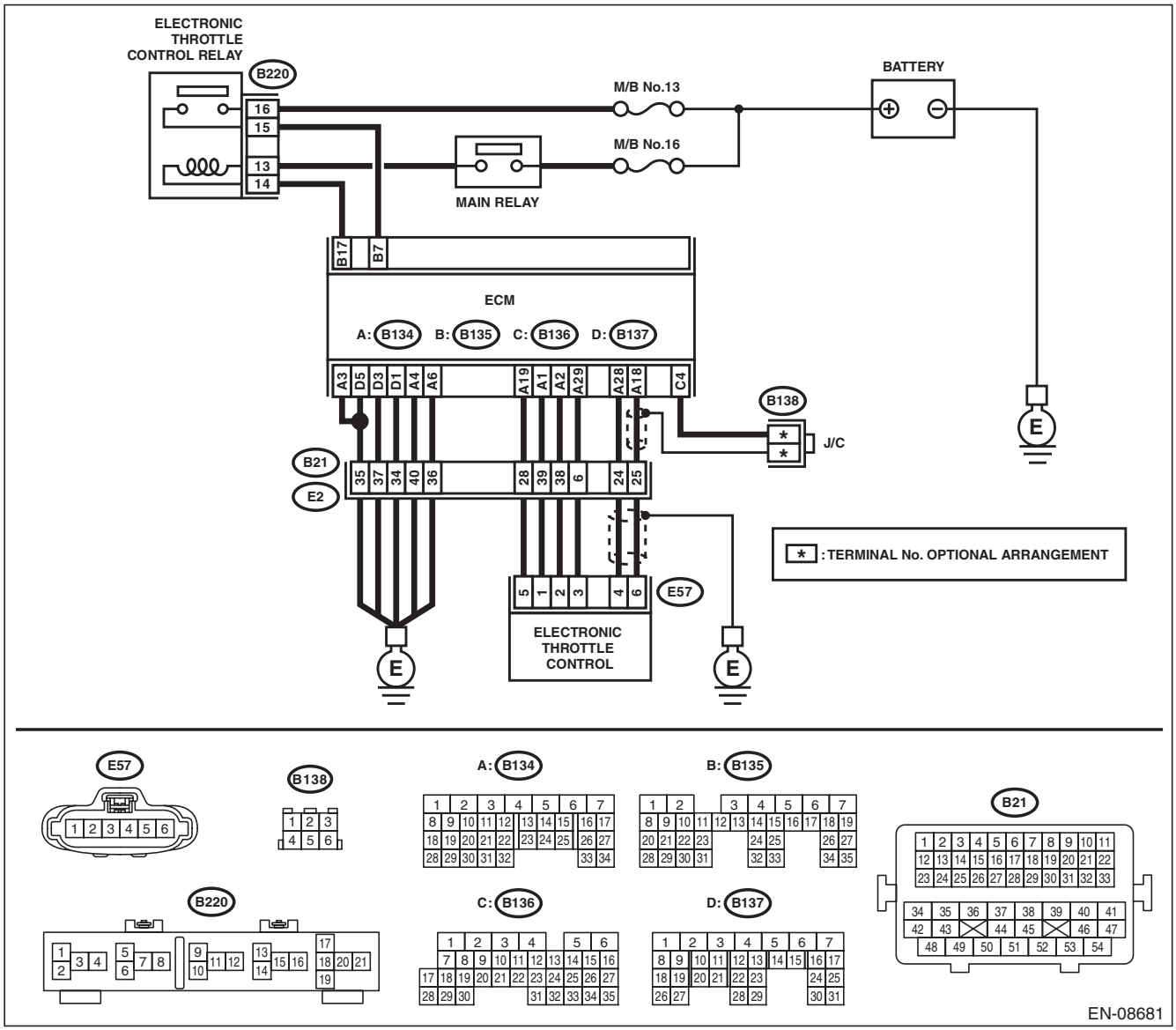

GETTHEMANUALS.org

	Step	Check	Yes	No
1	**CHECK HARNESS BETWEEN ECM AND ELECTRONIC THROTTLE CONTROL.** 1) Turn the ignition switch to OFF. 2) Disconnect the connectors from ECM and electronic throttle control. 3) Measure the resistance between ECM and chassis ground. ***Connector & terminal*** ***(B134) No. 19 — Chassis ground:*** ***(B134) No. 18 — Chassis ground:*** ***(B134) No. 18 — (B136) No. 4:*** ***(B134) No. 28 — Chassis ground:***	Is the resistance 1 MΩ or more?	Go to step **2**.	Repair the short circuit to ground in harness between ECM and electronic throttle control connector.
2	**CHECK SHORT CIRCUIT INSIDE THE ECM.** 1) Connect the connector to ECM. 2) Measure the resistance between electronic throttle control connector and engine ground. ***Connector & terminal*** ***(E57) No. 6 — Engine ground:*** ***(E57) No. 4 — Engine ground:***	Is the resistance 1 MΩ or more?	Go to step **3**.	Repair the short circuit to ground in harness between ECM and electronic throttle control connector. Replace the ECM if defective. <Ref. to FU(H6DO)-54, Engine Control Module (ECM).>
3	**CHECK HARNESS BETWEEN ECM AND ELECTRONIC THROTTLE CONTROL.** 1) Disconnect the connectors from ECM. 2) Measure the resistance of harness between ECM and electronic throttle control connector. ***Connector & terminal*** ***(B134) No. 18 — (E57) No. 6:*** ***(B134) No. 28 — (E57) No. 4:*** ***(B134) No. 29 — (E57) No. 3:***	Is the resistance less than 1 Ω?	Go to step **4**.	Repair the harness and connector. NOTE: In this case, repair the following item: • Open circuit in harness between ECM and electronic throttle control connector • Poor contact of coupling connector
4	**CHECK HARNESS BETWEEN ECM AND ELECTRONIC THROTTLE CONTROL.** 1) Connect the connector to ECM. 2) Measure the resistance between electronic throttle control connector and engine ground. ***Connector & terminal*** ***(E57) No. 3 — Engine ground:***	Is the resistance less than 5 Ω?	Go to step **5**.	Repair the harness and connector. NOTE: In this case, repair the following item: • Open circuit of harness between ECM and engine ground • Poor contact of ECM connector • Poor contact of coupling connector
5	**CHECK HARNESS BETWEEN ECM AND ELECTRONIC THROTTLE CONTROL.** 1) Turn the ignition switch to ON. 2) Measure the voltage between electronic throttle control connector and engine ground. ***Connector & terminal*** ***(E57) No. 6 (+) — Engine ground (–):*** ***(E57) No. 4 (+) — Engine ground (–):***	Is the voltage 5 V or more?	Repair the short circuit to power in harness between ECM and electronic throttle control connector.	Go to step **6**.

GETTHEMANUALS.org

Step		Check	Yes	No
6	**CHECK HARNESS BETWEEN ECM AND ELECTRONIC THROTTLE CONTROL.** 1) Turn the ignition switch to OFF. 2) Disconnect the connectors from ECM. 3) Measure the resistance between ECM connectors. ***Connector & terminal*** ***(B134) No. 19 — (B134) No. 18:*** ***(B134) No. 19 — (B134) No. 28:***	Is the resistance 1 MΩ or more?	Repair the poor contact of electronic throttle control connector. Replace the electronic throttle control if defective. <Ref. to FU(H6DO)-19, Throttle Body.>	Repair the short circuit to power in harness between ECM and electronic throttle control connector.

GETTHEMANUALS.org

FN:DTC P2138 THROTTLE/PEDAL POSITION SENSOR/SWITCH “D”/“E” VOLTAGE CORRELATION

DTC DETECTING CONDITION:

- Immediately at fault recognition
- GENERAL DESCRIPTION <Ref. to GD(H6DO)-252, DTC P2138 THROTTLE/PEDAL POSITION SENSOR/SWITCH “D”/“E” VOLTAGE CORRELATION, Diagnostic Trouble Code (DTC) Detecting Criteria.>

CAUTION:

After servicing or replacing faulty parts, perform Clear Memory Mode <Ref. to EN(H6DO)(diag)-57, OPERATION, Clear Memory Mode.>, and Inspection Mode <Ref. to EN(H6DO)(diag)-44, PROCEDURE, Inspection Mode.>.

TROUBLE SYMPTOM:

- Improper idling
- Poor driving performance

WIRING DIAGRAM:

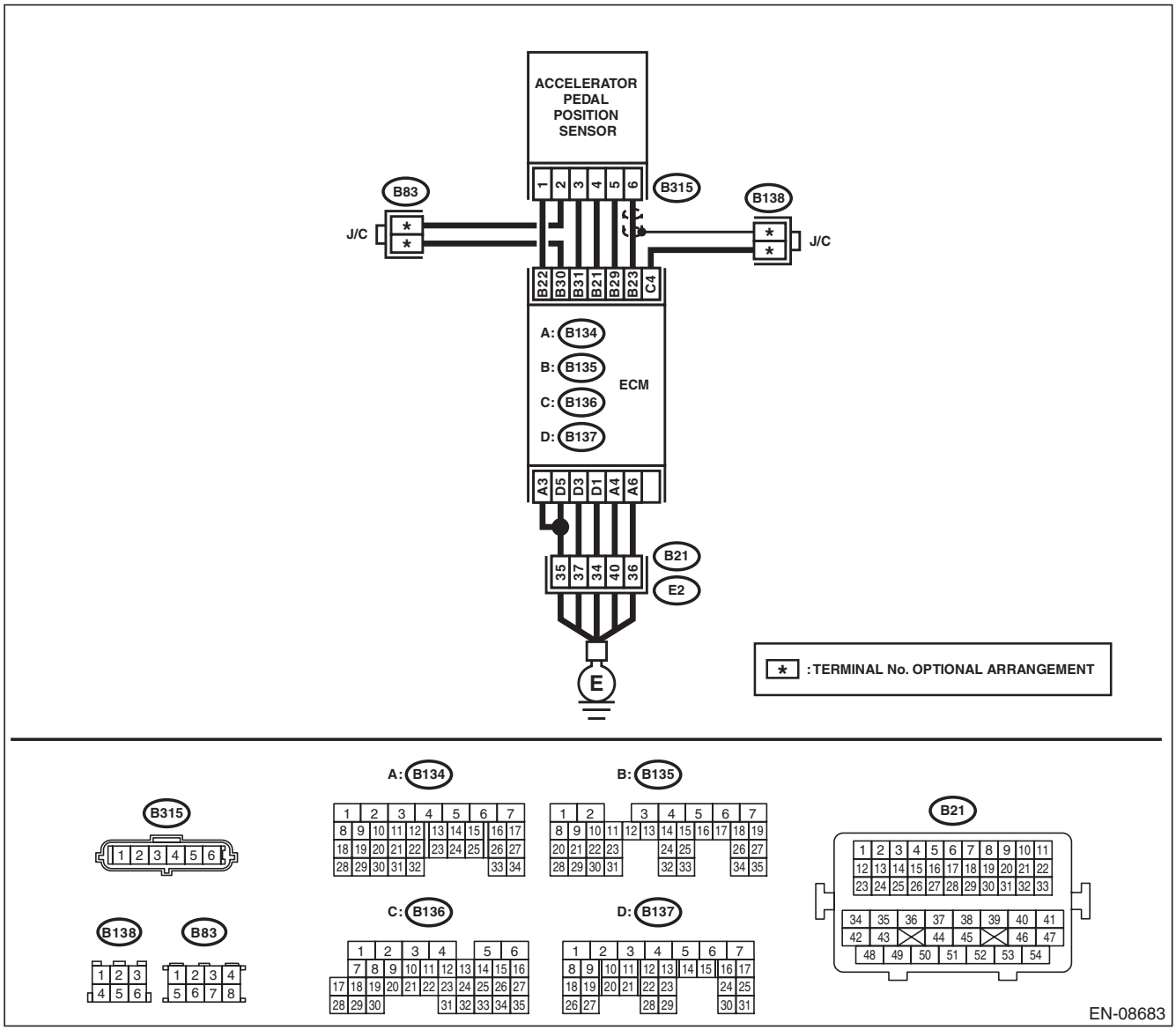

GETTHEMANUALS.org

	Step	Check	Yes	No
1	**CHECK ACCELERATOR PEDAL POSITION SENSOR OUTPUT.** 1) Turn the ignition switch to ON. 2) Measure the voltage between ECM and chassis ground. ***Connector & terminal*** ***Main accelerator pedal position sensor signal*** ***(B135) No. 23 (+) — Chassis ground (–):*** ***Sub accelerator pedal position sensor signal*** ***(B135) No. 31 (+) — Chassis ground (–):***	Is the difference in measured values for the main accelerator pedal position sensor signal and the sub accelerator pedal position sensor signal 0 V?	Go to step **3**.	Go to step **2**.
2	**CHECK ACCELERATOR PEDAL POSITION SENSOR OUTPUT.** 1) Measure the voltage between accelerator pedal position sensor connector and chassis ground. ***Connector & terminal*** ***(B315) No. 6 (+) — Chassis ground (–):*** ***(B315) No. 3 (+) — Chassis ground (–):***	Is the difference in measured values for the main accelerator pedal position sensor signal and the sub accelerator pedal position sensor signal 0 V?	Replace the accelerator pedal. <Ref. to SP(H4SO)-4, Accelerator Pedal.>	Repair the harness and connector. NOTE: In this case, repair the following item: • Open circuit in harness between ECM and accelerator pedal position sensor connector • Short circuit to ground in harness between ECM and accelerator pedal position sensor connector • Poor contact of coupling connector
3	**CHECK HARNESS BETWEEN ECM AND ACCELERATOR PEDAL POSITION SENSOR CONNECTOR.** Measure the resistance of harness between the accelerator pedal position sensor connector and chassis ground. ***Connector & terminal*** ***(B315) No. 5 — Chassis ground:*** ***(B315) No. 2 — Chassis ground:***	Is the resistance less than 5 Ω?	Repair the poor contact of ECM connector.	Repair the harness and connector. NOTE: In this case, repair the following item: • Open circuit in harness between ECM and accelerator pedal position sensor connector • Open circuit of harness between ECM and engine ground • Poor contact of ECM connector • Poor contact of coupling connector

GETTHEMANUALS.org

FO:DTC P219A BANK 1 AIR-FUEL RATIO IMBALANCE

DTC DETECTING CONDITION:

- Detected when two consecutive driving cycles with fault occur.
- GENERAL DESCRIPTION <Ref. to GD(H6DO)-254, DTC P219A BANK 1 AIR-FUEL RATIO IMBALANCE, Diagnostic Trouble Code (DTC) Detecting Criteria.>

TROUBLE SYMPTOM:

- Engine stalls.
- Improper idling

CAUTION:

After servicing or replacing faulty parts, perform Clear Memory Mode <Ref. to EN(H6DO)(diag)-57, OPERATION, Clear Memory Mode.>, and Inspection Mode <Ref. to EN(H6DO)(diag)-44, PROCEDURE, Inspection Mode.>.

WIRING DIAGRAM:

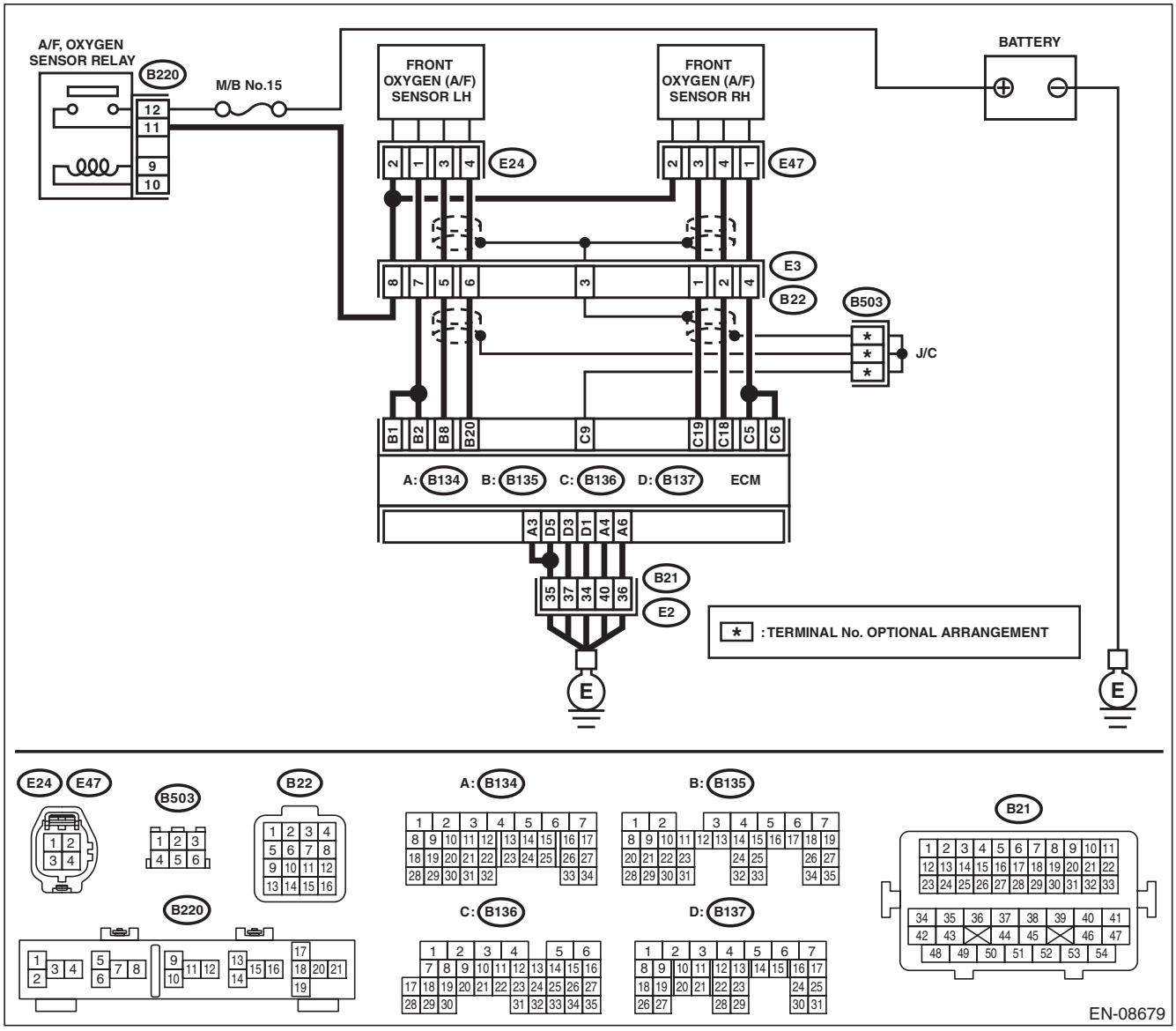

GETTHEMANUALS.org

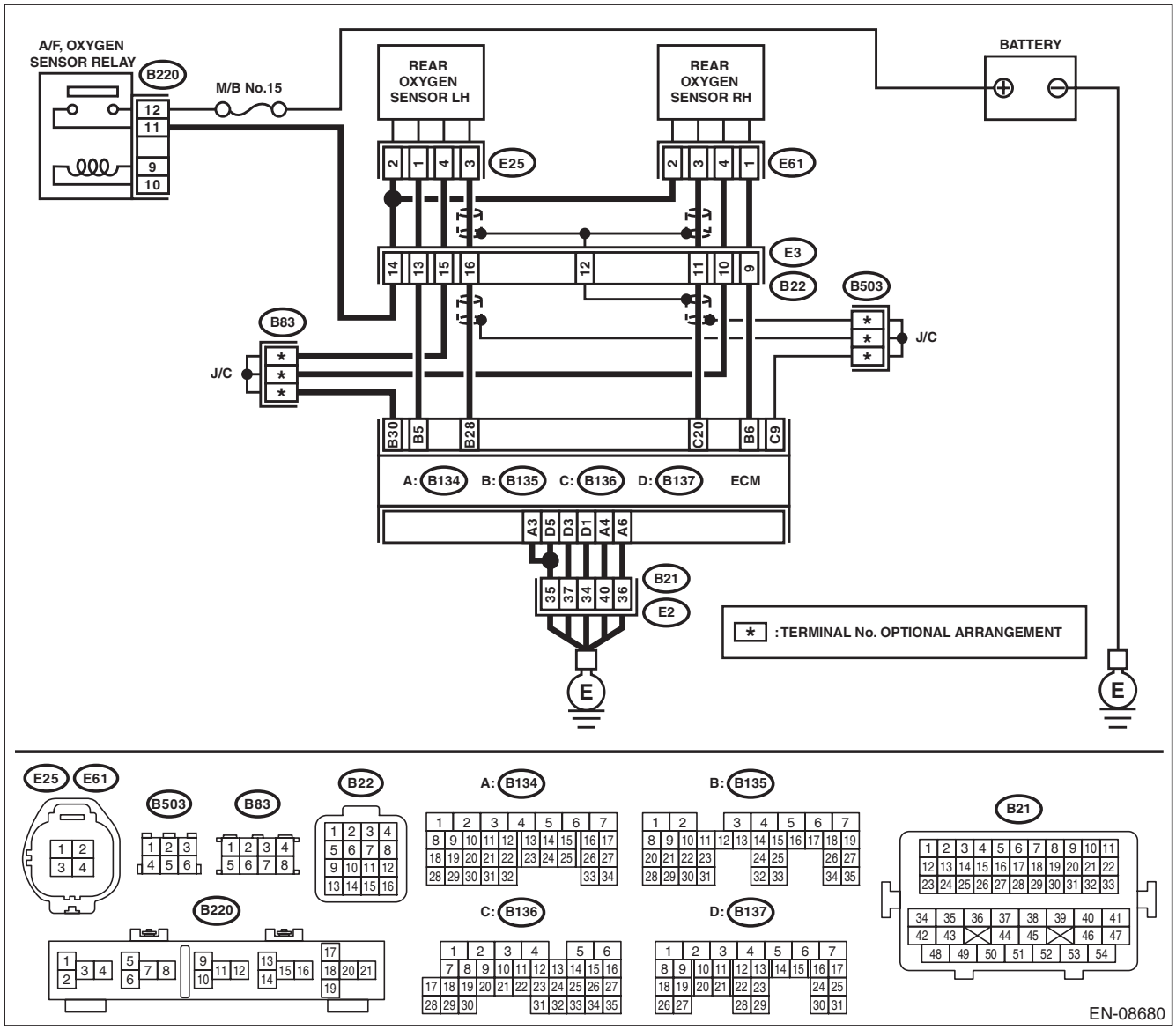

GETTHEMANUALS.org

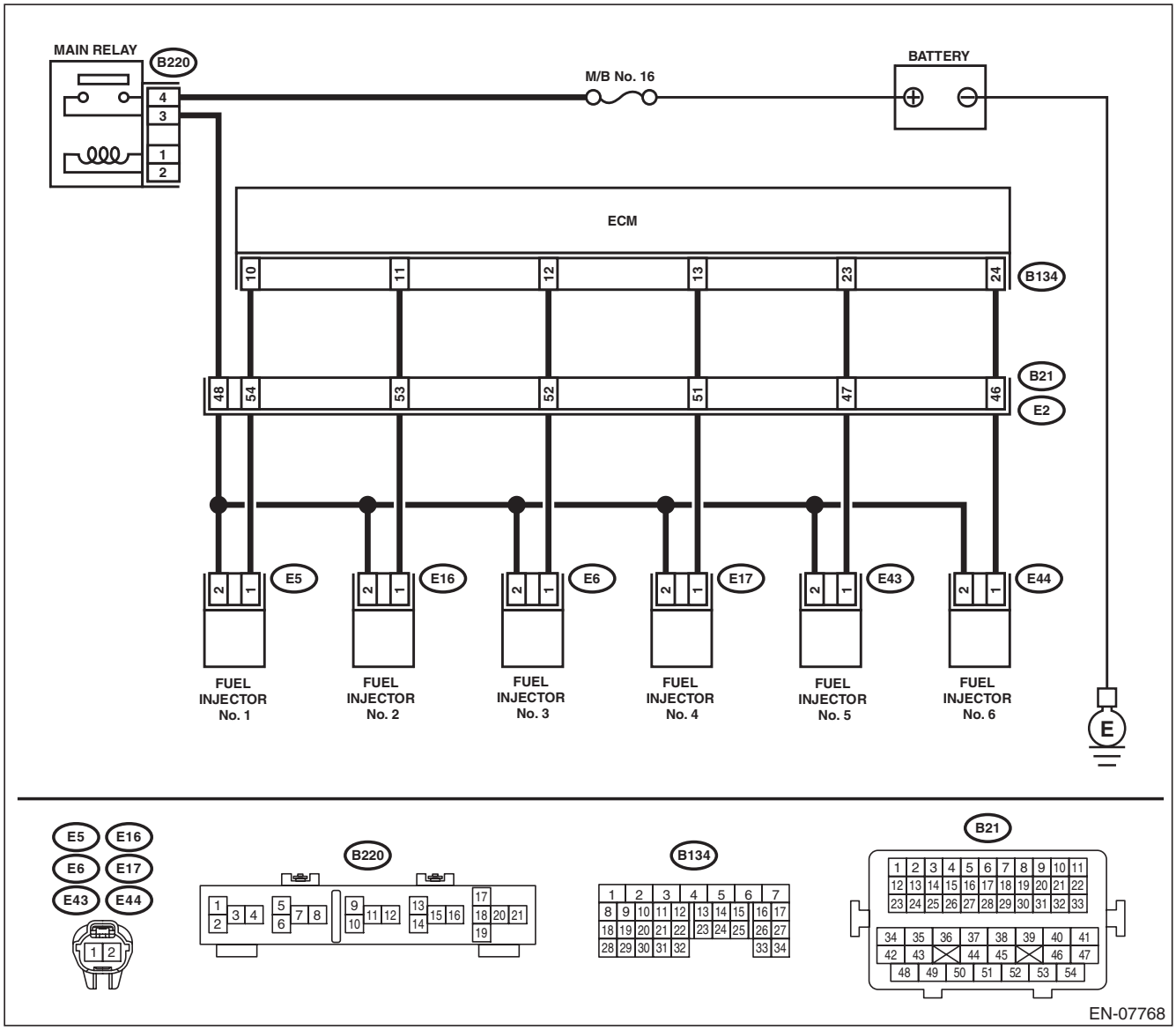

Step		Check	Yes	No
1	**CHECK FRONT OXYGEN (A/F) SENSOR CONNECTOR AND COUPLING CONNECTOR.**	Has water entered the connector?	Completely remove any water inside.	Go to step **2**.
2	**CHECK HARNESS BETWEEN ECM AND FRONT OXYGEN (A/F) SENSOR CONNECTOR.** 1) Turn the ignition switch to OFF. 2) Disconnect the connectors from ECM and front oxygen (A/F) sensor. 3) Measure the resistance of harness between ECM and front oxygen (A/F) sensor connector. ***Connector & terminal*** ***(B136) No. 19 — (E47) No. 3:*** ***(B136) No. 18 — (E47) No. 4:***	Is the resistance less than 1 Ω?	Go to step **3**.	Repair the harness and connector. NOTE: In this case, repair the following item: • Open circuit in harness between ECM and front oxygen (A/F) sensor connector • Poor contact of coupling connector

GETTHEMANUALS.org

	Step	Check	Yes	No
3	**CHECK HARNESS BETWEEN ECM AND FRONT OXYGEN (A/F) SENSOR CONNECTOR.** Measure the resistance between ECM and chassis ground. ***Connector & terminal*** ***(B136) No. 19 — Chassis ground:*** ***(B136) No. 18 — Chassis ground:***	Is the resistance 1 MΩ or more?	Go to step **4**.	Repair the ground short circuit of harness between ECM and front oxygen (A/F) sensor connector.
4	**CHECK OUTPUT SIGNAL FOR ECM.** 1) Connect the connector to ECM. 2) Turn the ignition switch to ON. 3) Measure the voltage between front oxygen (A/F) sensor connector and chassis ground. ***Connector & terminal*** ***(E47) No. 3 (+) — Chassis ground (–):***	Is the voltage 4.5 V or more?	Go to step **6**.	Go to step **5**.
5	**CHECK OUTPUT SIGNAL FOR ECM.** Measure the voltage between front oxygen (A/F) sensor connector and chassis ground. ***Connector & terminal*** ***(E47) No. 4 (+) — Chassis ground (–):***	Is the voltage 4.95 V or more?	Go to step **6**.	Go to step **7**.
6	**CHECK OUTPUT SIGNAL FOR ECM.** Measure the voltage between front oxygen (A/F) sensor connector and chassis ground. ***Connector & terminal*** ***(E47) No. 3 (+) — Chassis ground (–):*** ***(E47) No. 4 (+) — Chassis ground (–):***	Is the voltage 8 V or more?	Repair the short circuit to power in the harness between ECM and front oxygen (A/F) sensor connector. After repair, replace the ECM. <Ref. to FU(H6DO)-54, Engine Control Module (ECM).>	Repair the poor contact of ECM connector.
7	**CHECK EXHAUST SYSTEM.**	Are there holes or loose bolts on exhaust system?	Repair the exhaust system.	Go to step **8**.
8	**CHECK AIR INTAKE SYSTEM.**	Are there holes, loose bolts or disconnection of hose on air intake system?	Repair the air intake system.	Go to step **9**.
9	**CHECK FUEL PRESSURE.** **WARNING:** **Place "NO OPEN FLAMES" signs near the working area.** **CAUTION:** **Be careful not to spill fuel.** 1) Connect the front oxygen (A/F) sensor connector. 2) Measure the fuel pressure. <Ref. to ME(H6DO)-31, INSPECTION, Fuel Pressure.> **CAUTION:** **Release fuel pressure before removing the fuel pressure gauge.**	Is the measured value 340 — 400 kPa (3.5 — 4.1 kgf/cm^2, 49 — 58 psi)?	Go to step **10**.	Repair the following item. Fuel pressure is too high: • Clogged fuel line or bent hose Fuel pressure is too low: • Improper fuel pump discharge • Clogged fuel line

GETTHEMANUALS.org

Step		Check	Yes	No
10	**CHECK ENGINE COOLANT TEMPERATURE SENSOR.** 1) Start the engine and warm up completely. 2) Read the value of «Coolant Temp.» using the Subaru Select Monitor or a general scan tool. NOTE: • Subaru Select Monitor For detailed operation procedures, refer to "READ CURRENT DATA FOR ENGINE". <Ref. to EN(H6DO)(diag)-35, Subaru Select Monitor.> • General scan tool For detailed operation procedures, refer to the general scan tool operation manual.	Is the value of «Coolant Temp.» 75°C (167°F) or more?	Go to step **11**.	Replace the engine coolant temperature sensor. <Ref. to FU(H6DO)-29, Engine Coolant Temperature Sensor.>
11	**CHECK MASS AIR FLOW AND INTAKE AIR TEMPERATURE SENSOR.** 1) Start the engine and warm up engine until coolant temperature is higher than 75°C (167°F). 2) Place the select lever in "P" range or "N" range. 3) Turn the A/C switch to OFF. 4) Turn all the accessory switches to OFF. 5) Read the value of «Mass Air Flow» using the Subaru Select Monitor or a general scan tool. NOTE: • Subaru Select Monitor For detailed operation procedures, refer to "READ CURRENT DATA FOR ENGINE". <Ref. to EN(H6DO)(diag)-35, Subaru Select Monitor.> • General scan tool For detailed operation procedures, refer to the general scan tool operation manual.	Is the value of «Mass Air Flow» 2.0 — 5.0 g/s (0.26 — 0.66 lb/m)?	Go to step **12**.	Replace the mass air flow and intake air temperature sensor. <Ref. to FU(H6DO)-41, Mass Air Flow and Intake Air Temperature Sensor.>
12	**CHECK MASS AIR FLOW AND INTAKE AIR TEMPERATURE SENSOR.** 1) Start the engine and warm up engine until coolant temperature is higher than 75°C (167°F). 2) Place the select lever in "P" range or "N" range. 3) Turn the A/C switch to OFF. 4) Turn all the accessory switches to OFF. 5) Open the front hood. 6) Measure the ambient temperature. 7) Read the value of «Intake Air Temp.» using the Subaru Select Monitor or a general scan tool. NOTE: • Subaru Select Monitor For detailed operation procedures, refer to "READ CURRENT DATA FOR ENGINE". <Ref. to EN(H6DO)(diag)-35, Subaru Select Monitor.> • General scan tool For detailed operation procedures, refer to the general scan tool operation manual.	Subtract ambient temperature from «Intake Air Temp.». Is the obtained value –10 — 50°C (–18 — 90°F)?	Go to step **13**.	Check the mass air flow and intake air temperature sensor. <Ref. to FU(H6DO)-41, Mass Air Flow and Intake Air Temperature Sensor.>

GETTHEMANUALS.org

	Step	Check	Yes	No
13	**CHECK REAR OXYGEN SENSOR DATA.** 1) Warm up the engine until engine coolant temperature is higher than 75°C (167°F), and keep the engine speed at 3,000 rpm. (2 minutes maximum) 2) Read the value of «Front O2 Sensor #1» using the Subaru Select Monitor or a general scan tool. NOTE: • Subaru Select Monitor For detailed operation procedures, refer to "READ CURRENT DATA FOR ENGINE". <Ref. to EN(H6DO)(diag)-35, Subaru Select Monitor.> • General scan tool For detailed operation procedures, refer to the general scan tool operation manual.	Is the value of «Front O2 Sensor #1» 0.490 V or more?	Go to step **14**.	Go to step **15**.
14	**CHECK REAR OXYGEN SENSOR DATA.** 1) Warm up the engine until engine coolant temperature is higher than 75°C (167°F), and rapidly reduce the engine speed from 3,000 rpm. 2) Read the value of «Front O2 Sensor #1» using the Subaru Select Monitor or a general scan tool. NOTE: • Subaru Select Monitor For detailed operation procedures, refer to "READ CURRENT DATA FOR ENGINE". <Ref. to EN(H6DO)(diag)-35, Subaru Select Monitor.> • General scan tool For detailed operation procedures, refer to the general scan tool operation manual.	Is the value of «Front O2 Sensor #1» 0.250 V or less?	Go to step **16**.	Go to step **15**.
15	**CHECK REAR OXYGEN SENSOR CONNECTOR AND COUPLING CONNECTOR.**	Has water entered the connector?	Completely remove any water inside.	Go to step **17**.
16	**CHECK FRONT OXYGEN (A/F) SENSOR USING REAR OXYGEN SENSOR SIGNAL.** 1) Warm up the engine until engine coolant temperature is higher than 75°C (167°F), then keep the engine idling for 5 minutes or more. 2) Read the value of «Front O2 Sensor #1» using the Subaru Select Monitor or a general scan tool. NOTE: • Subaru Select Monitor For detailed operation procedures, refer to "READ CURRENT DATA FOR ENGINE". <Ref. to EN(H6DO)(diag)-35, Subaru Select Monitor.> • General scan tool For detailed operation procedures, refer to the general scan tool operation manual.	Is the value in «Front O2 Sensor #1» kept at 0.250 V or less for 5 minutes or more?	Replace the front oxygen (A/F) sensor. <Ref. to FU(H6DO)-50, Front Oxygen (A/F) Sensor.>	Go to step **17**.

GETTHEMANUALS.org

	Step	Check	Yes	No
17	**CHECK HARNESS BETWEEN ECM AND REAR OXYGEN SENSOR CONNECTOR.** 1) Turn the ignition switch to OFF. 2) Disconnect the connector from ECM and rear oxygen sensor. 3) Measure the resistance of harness between ECM and rear oxygen sensor connector. ***Connector & terminal*** ***(B136) No. 20 — (E61) No. 3:*** ***(B135) No. 30 — (E61) No. 4:***	Is the resistance less than 1 Ω?	Go to step **18**.	Repair the harness and connector. NOTE: In this case, repair the following item: • Open circuit in harness between ECM and rear oxygen sensor connector • Poor contact of coupling connector
18	**CHECK HARNESS BETWEEN ECM AND REAR OXYGEN SENSOR CONNECTOR.** 1) Connect the connector to ECM. 2) Turn the ignition switch to ON. 3) Measure the voltage between rear oxygen sensor connector and chassis ground. ***Connector & terminal*** ***(E61) No. 3 (+) — Chassis ground (–):***	Is the voltage 0.2 — 0.5 V?	Replace the rear oxygen sensor. <Ref. to FU(H6DO)-52, Rear Oxygen Sensor.>	Go to step **19**.
19	**CHECK OUTPUT SIGNAL OF ECM.** 1) Turn the ignition switch to ON. 2) Measure the voltage between ECM and chassis ground on faulty cylinders. ***Connector & terminal*** ***#1 (B134) No. 10 (+) — Chassis ground (–):*** ***#2 (B134) No. 11 (+) — Chassis ground (–):*** ***#3 (B134) No. 12 (+) — Chassis ground (–):*** ***#4 (B134) No. 13 (+) — Chassis ground (–):*** ***#5 (B134) No. 23 (+) — Chassis ground (–):*** ***#6 (B134) No. 24 (+) — Chassis ground (–):***	Is the voltage 10 V or more?	Go to step **24**.	Go to step **20**.
20	**CHECK HARNESS BETWEEN ECM AND FUEL INJECTOR.** 1) Turn the ignition switch to OFF. 2) Disconnect the connector from fuel injector on faulty cylinders. 3) Measure the resistance between fuel injector connector and engine ground on faulty cylinders. ***Connector & terminal*** ***#1 (E5) No. 1 — Engine ground:*** ***#2 (E16) No. 1 — Engine ground:*** ***#3 (E6) No. 1 — Engine ground:*** ***#4 (E17) No. 1 — Engine ground:*** ***#5 (E43) No. 1 — Engine ground:*** ***#6 (E44) No. 1 — Engine ground:***	Is the resistance 1 MΩ or more?	Go to step **21**.	Repair the short circuit to ground in harness between ECM and fuel injector connector.
21	**CHECK HARNESS BETWEEN ECM AND FUEL INJECTOR.** Measure the resistance of harness between ECM and fuel injector connector on faulty cylinders. ***Connector & terminal*** ***#1 (B134) No. 10 — (E5) No. 1:*** ***#2 (B134) No. 11 — (E16) No. 1:*** ***#3 (B134) No. 12 — (E6) No. 1:*** ***#4 (B134) No. 13 — (E17) No. 1:*** ***#5 (B134) No. 23 — (E43) No. 1:*** ***#6 (B134) No. 24 — (E44) No. 1:***	Is the resistance less than 1 Ω?	Go to step **22**.	Repair the harness and connector. NOTE: In this case, repair the following item: • Open circuit in harness between ECM and fuel injector connector • Poor contact of coupling connector

GETTHEMANUALS.org

	Step	Check	Yes	No
22	**CHECK FUEL INJECTOR.** Measure the resistance between fuel injector terminals on faulty cylinder. ***Terminals*** ***No. 1 — No. 2:***	Is the resistance 5 — 20 Ω?	Go to step **23**.	Replace the faulty fuel injector. <Ref. to FU(H6DO)-44, Fuel Injector.>
23	**CHECK POWER SUPPLY LINE.** 1) Turn the ignition switch to ON. 2) Measure the voltage between fuel injector connector of faulty cylinders and engine ground. ***Connector & terminal*** ***#1 (E5) No. 2 (+) — Engine ground (–):*** ***#2 (E16) No. 2 (+) — Engine ground (–):*** ***#3 (E6) No. 2 (+) — Engine ground (–):*** ***#4 (E17) No. 2 (+) — Engine ground (–):*** ***#5 (E43) No. 2 (+) — Engine ground (–):*** ***#6 (E44) No. 2 (+) — Engine ground (–):***	Is the voltage 10 V or more?	Repair the poor contact of all connectors in fuel injector circuit.	Repair the harness and connector. NOTE: In this case, repair the following item: • Open circuit in harness between the main relay and fuel injector connector on faulty cylinders • Poor contact of coupling connector • Poor contact of main relay connector
24	**CHECK HARNESS BETWEEN ECM AND FUEL INJECTOR.** 1) Turn the ignition switch to OFF. 2) Disconnect the connector from fuel injector on faulty cylinders. 3) Turn the ignition switch to ON. 4) Measure the voltage between ECM and chassis ground on faulty cylinders. ***Connector & terminal*** ***#1 (B134) No. 10 (+) — Chassis ground (–):*** ***#2 (B134) No. 11 (+) — Chassis ground (–):*** ***#3 (B134) No. 12 (+) — Chassis ground (–):*** ***#4 (B134) No. 13 (+) — Chassis ground (–):*** ***#5 (B134) No. 23 (+) — Chassis ground (–):*** ***#6 (B134) No. 24 (+) — Chassis ground (–):***	Is the voltage 10 V or more?	Repair the short circuit to power in harness between ECM and fuel injector connector.	Go to step **25**.
25	**CHECK FUEL INJECTOR.** 1) Turn the ignition switch to OFF. 2) Measure the resistance between fuel injector terminals on faulty cylinder. ***Terminals*** ***No. 1 — No. 2:***	Is the resistance 5 — 20 Ω?	Go to step **26**.	Replace the faulty fuel injector. <Ref. to FU(H6DO)-44, Fuel Injector.>
26	**CHECK INSTALLATION OF CAMSHAFT POSITION SENSOR/CRANKSHAFT POSITION SENSOR.**	Is the camshaft position sensor or crankshaft position sensor loosely installed?	Tighten the camshaft position sensor or crankshaft position sensor.	Go to step **27**.
27	**CHECK CRANK PLATE.**	Is the crank sprocket rusted or the teeth of crank plate broken?	Replace the crank plate. <Ref. to ME(H6DO)-104, Cylinder Block.>	Go to step **28**.
28	**CHECK INSTALLATION CONDITION OF TIMING CHAIN.** Turn the crankshaft using ST, and align the alignment mark on crank sprocket with alignment mark on cylinder block. ST 18252AA000 CRANKSHAFT SOCKET	Is the timing chain dislocated from its proper position?	Correct the installation condition of timing chain. <Ref. to ME(H6DO)-62, Timing Chain Assembly.>	Go to step **29**.

GETTHEMANUALS.org

Step		Check	Yes	No
29	**CHECK FUEL LEVEL.**	Is the fuel meter indication lower than the “Lower” level?	Refill the fuel so that the fuel meter indication is higher than the “Lower” level, and proceed to the next step. Go to step **30**.	Go to step **30**.
30	**CHECK STATUS OF MALFUNCTION INDICATOR LIGHT.** 1) Clear the memory using the Subaru Select Monitor or general scan tool. <Ref. to EN(H6DO)(diag)-57, Clear Memory Mode.> 2) Start the engine, and drive the vehicle 10 minutes or more.	Does the malfunction indicator light illuminate or blink?	Go to step **32**.	Go to step **31**.
31	**CHECK CAUSE OF MISFIRE.**	Was the cause of misfire identified when the engine is running?	Finish diagnostics operation, if the engine has no abnormality.	Repair the poor contact of connector. NOTE: In this case, repair the following item: • Poor contact of ignition coil connector • Poor contact of fuel injector connector on faulty cylinders • Poor contact of ECM connector • Poor contact of coupling connector
32	**CHECK AIR INTAKE SYSTEM.**	Is there any fault in air intake system?	Repair the air intake system. NOTE: Check the following items. • Are there air leaks or air suction caused by loose or dislocated nuts and bolts? • Are there cracks or any disconnection of hoses?	Go to step **33**.
33	**CHECK MISFIRE SYMPTOM.** 1) Turn the ignition switch to ON. 2) Check for DTC. <Ref. to EN(H6DO)(diag)-43, Read Diagnostic Trouble Code (DTC).>	Does the Subaru Select Monitor or general scan tool indicate only one DTC?	Go to step **36**.	Go to step **34**.
34	**CHECK DTC ON DISPLAY.**	Is DTC P0301, P0303 and P0305 displayed?	Go to step **37**.	Go to step **35**.
35	**CHECK DTC ON DISPLAY.**	Is DTC P0302, P0304 and P0306 displayed?	Go to step **38**.	Go to step **39**.

GETTHEMANUALS.org

Step		Check	Yes	No
36	**ONLY ONE CYLINDER.**	Is there any fault in the cylinder?	Repair or replace faulty parts. NOTE: Check the following items. • Spark plug • Ignition coil • Fuel injector • Compression ratio	Check DTC P0171, P0172, P0174 or P0175 using “List of Diagnostic Trouble Code (DTC)”. <Ref. to EN(H6DO)(diag)-85, List of Diagnostic Trouble Code (DTC).>
37	**GROUP OF #1, #3 AND #5 CYLINDERS.**	Is there any fault in #1, #3 and #5 cylinders?	Repair or replace faulty parts. NOTE: Check the following items. • Spark plug • Ignition coil • Fuel injector • Compression ratio • Skipping timing chain teeth	Check DTC P0171, P0172, P0174 or P0175 using “List of Diagnostic Trouble Code (DTC)”. <Ref. to EN(H6DO)(diag)-85, List of Diagnostic Trouble Code (DTC).>
38	**GROUP OF #2, #4 AND #6 CYLINDERS.**	Is there any fault in #2, #4 and #6 cylinders?	Repair or replace faulty parts. NOTE: Check the following items. • Spark plug • Ignition coil • Fuel injector • Compression ratio • Skipping timing chain teeth	Check DTC P0171, P0172, P0174 or P0175 using “List of Diagnostic Trouble Code (DTC)”. <Ref. to EN(H6DO)(diag)-85, List of Diagnostic Trouble Code (DTC).>
39	**CYLINDER AT RANDOM.**	Is the engine idle rough?	Check DTC P0171, P0172, P0174 or P0175 using “List of Diagnostic Trouble Code (DTC)”. <Ref. to EN(H6DO)(diag)-85, List of Diagnostic Trouble Code (DTC).>	Repair or replace faulty parts. NOTE: Check the following items. • Spark plug • Ignition coil • Fuel injector • Compression ratio

GETTHEMANUALS.org

FP:DTC P219B BANK 2 AIR-FUEL RATIO IMBALANCE

DTC DETECTING CONDITION:

- Detected when two consecutive driving cycles with fault occur.
- GENERAL DESCRIPTION <Ref. to GD(H6DO)-257, DTC P219B BANK 2 AIR-FUEL RATIO IMBALANCE, Diagnostic Trouble Code (DTC) Detecting Criteria.>

TROUBLE SYMPTOM:

- Engine stalls.
- Improper idling

CAUTION:

After servicing or replacing faulty parts, perform Clear Memory Mode <Ref. to EN(H6DO)(diag)-57, OPERATION, Clear Memory Mode.>, and Inspection Mode <Ref. to EN(H6DO)(diag)-44, PROCEDURE, Inspection Mode.>.

WIRING DIAGRAM:

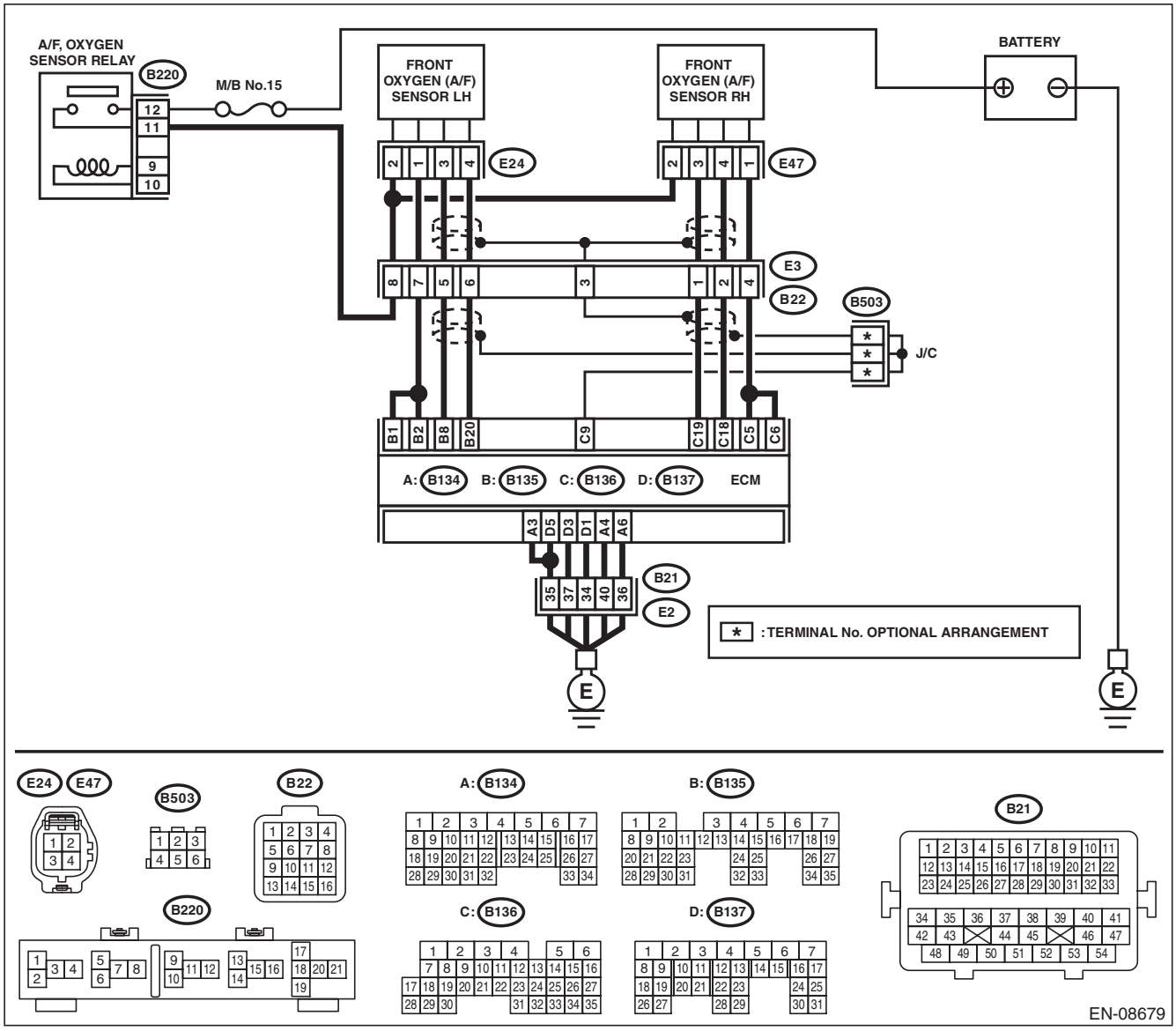

GETTHEMANUALS.org

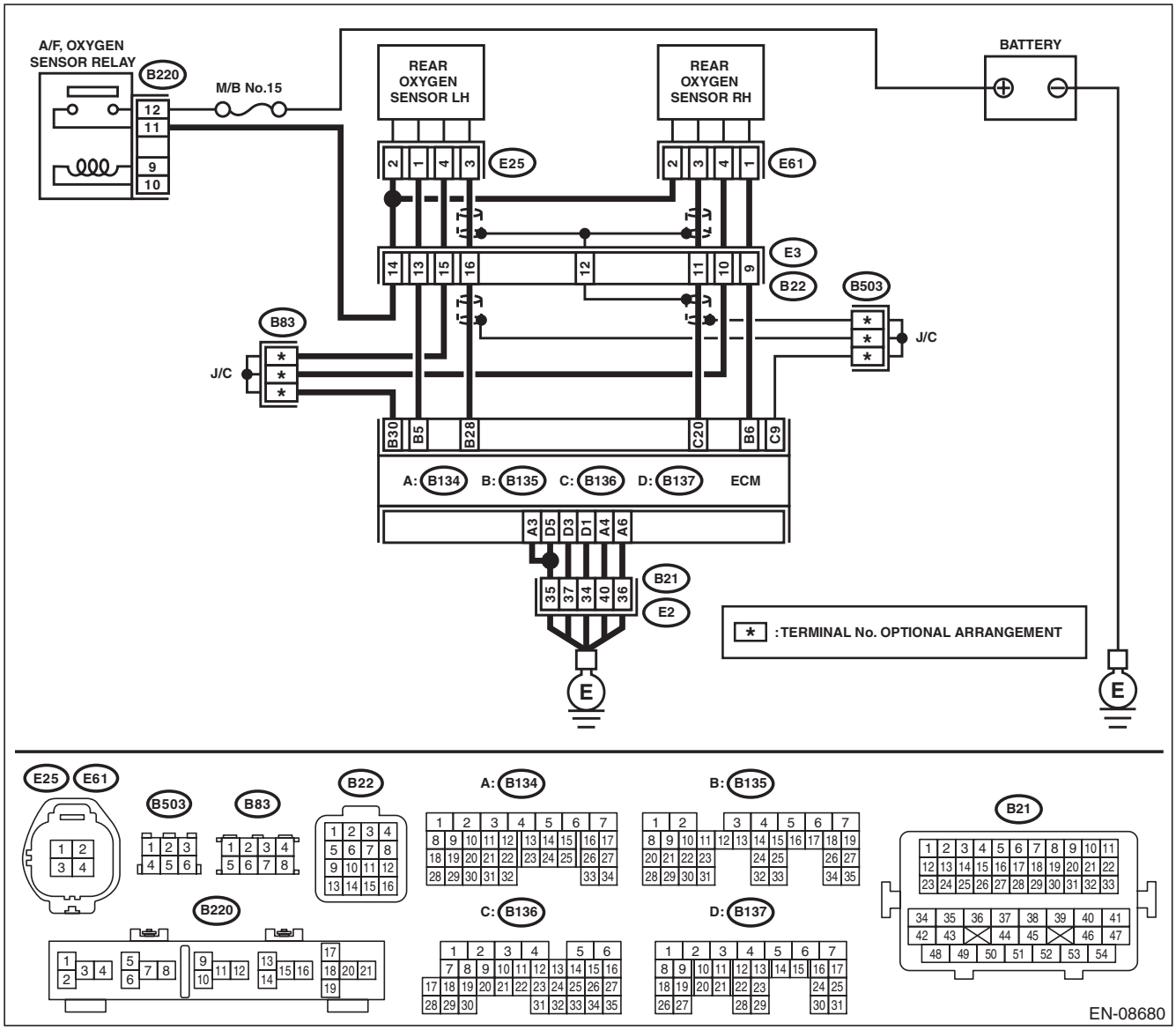

GETTHEMANUALS.org

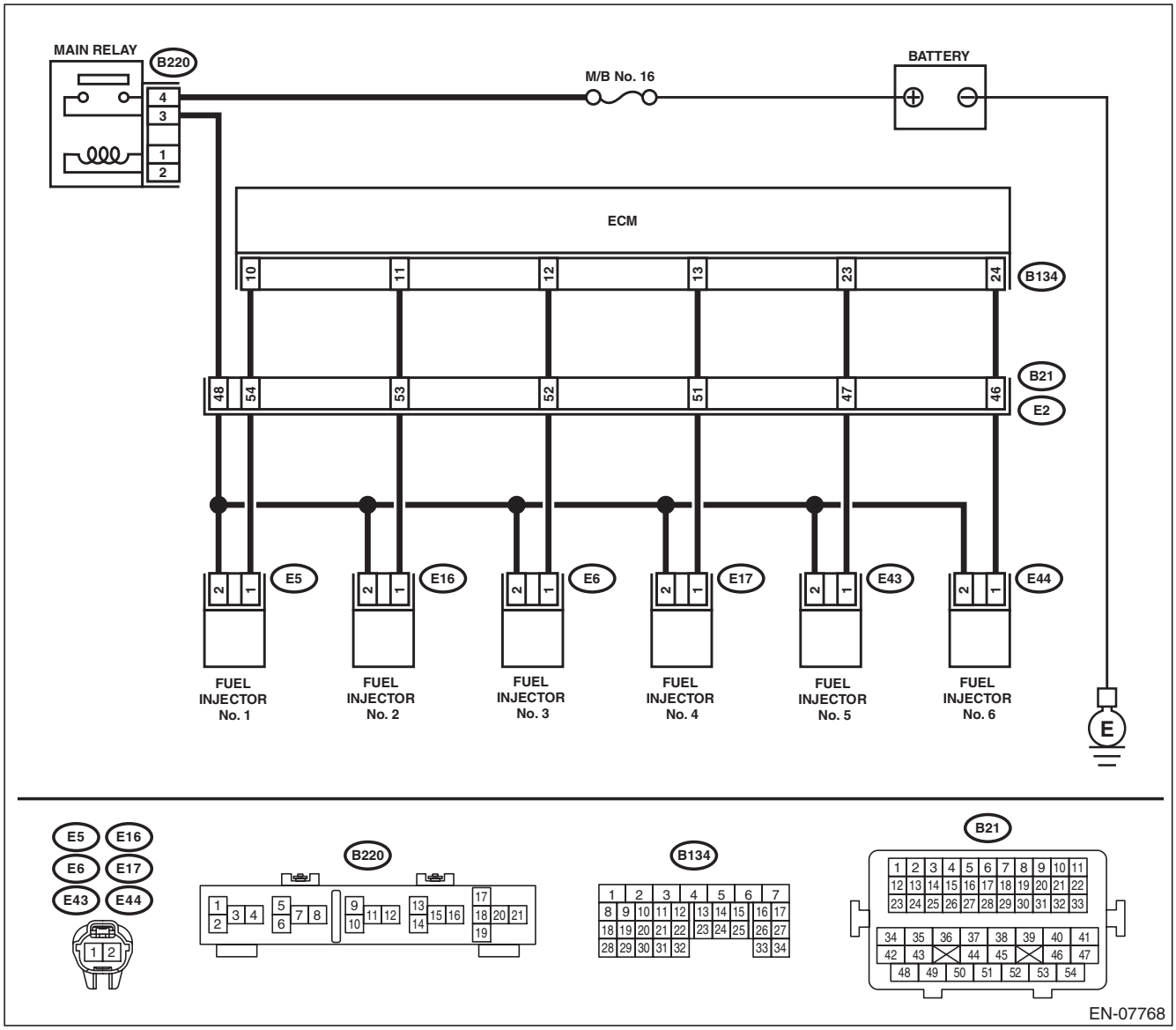

Step		Check	Yes	No
1	**CHECK FRONT OXYGEN (A/F) SENSOR CONNECTOR AND COUPLING CONNECTOR.**	Has water entered the connector?	Completely remove any water inside.	Go to step **2**.
2	**CHECK HARNESS BETWEEN ECM AND FRONT OXYGEN (A/F) SENSOR CONNECTOR.** 1) Turn the ignition switch to OFF. 2) Disconnect the connectors from ECM and front oxygen (A/F) sensor. 3) Measure the resistance of harness between ECM and front oxygen (A/F) sensor connector. ***Connector & terminal*** ***(B135) No. 8 — (E24) No. 3:*** ***(B135) No. 20 — (E24) No. 4:***	Is the resistance less than 1 Ω?	Go to step **3**.	Repair the harness and connector. NOTE: In this case, repair the following item: • Open circuit in harness between ECM and front oxygen (A/F) sensor connector • Poor contact of coupling connector

GETTHEMANUALS.org

	Step	Check	Yes	No
3	**CHECK HARNESS BETWEEN ECM AND FRONT OXYGEN (A/F) SENSOR CONNECTOR.** Measure the resistance between ECM and chassis ground. ***Connector & terminal*** ***(B135) No. 8 — Chassis ground:*** ***(B135) No. 20 — Chassis ground:***	Is the resistance 1 MΩ or more?	Go to step **4**.	Repair the ground short circuit of harness between ECM and front oxygen (A/F) sensor connector.
4	**CHECK OUTPUT SIGNAL FOR ECM.** 1) Connect the connector to ECM. 2) Turn the ignition switch to ON. 3) Measure the voltage between front oxygen (A/F) sensor connector and chassis ground. ***Connector & terminal*** ***(E24) No. 3 (+) — Chassis ground (–):***	Is the voltage 4.5 V or more?	Go to step **6**.	Go to step **5**.
5	**CHECK OUTPUT SIGNAL FOR ECM.** Measure the voltage between front oxygen (A/F) sensor connector and chassis ground. ***Connector & terminal*** ***(E24) No. 4 (+) — Chassis ground (–):***	Is the voltage 4.95 V or more?	Go to step **6**.	Go to step **7**.
6	**CHECK OUTPUT SIGNAL FOR ECM.** Measure the voltage between front oxygen (A/F) sensor connector and chassis ground. ***Connector & terminal*** ***(E24) No. 3 (+) — Chassis ground (–):*** ***(E24) No. 4 (+) — Chassis ground (–):***	Is the voltage 8 V or more?	Repair the short circuit to power in the harness between ECM and front oxygen (A/F) sensor connector. After repair, replace the ECM. <Ref. to FU(H6DO)-54, Engine Control Module (ECM).>	Repair the poor contact of ECM connector.
7	**CHECK EXHAUST SYSTEM.**	Are there holes or loose bolts on exhaust system?	Repair the exhaust system.	Go to step **8**.
8	**CHECK AIR INTAKE SYSTEM.**	Are there holes, loose bolts or disconnection of hose on air intake system?	Repair the air intake system.	Go to step **9**.
9	**CHECK FUEL PRESSURE.** **WARNING:** **Place "NO OPEN FLAMES" signs near the working area.** **CAUTION:** **Be careful not to spill fuel.** 1) Connect the front oxygen (A/F) sensor connector. 2) Measure the fuel pressure. <Ref. to ME(H6DO)-31, INSPECTION, Fuel Pressure.> **CAUTION:** **Release fuel pressure before removing the fuel pressure gauge.**	Is the measured value 340 — 400 kPa (3.5 — 4.1 kgf/cm^2, 49 — 58 psi)?	Go to step **10**.	Repair the following item. Fuel pressure is too high: • Clogged fuel line or bent hose Fuel pressure is too low: • Improper fuel pump discharge • Clogged fuel line

GETTHEMANUALS.org

Step		Check	Yes	No
10	**CHECK ENGINE COOLANT TEMPERATURE SENSOR.** 1) Start the engine and warm up completely. 2) Read the value of «Coolant Temp.» using the Subaru Select Monitor or a general scan tool. NOTE: • Subaru Select Monitor For detailed operation procedures, refer to "READ CURRENT DATA FOR ENGINE". <Ref. to EN(H6DO)(diag)-35, Subaru Select Monitor.> • General scan tool For detailed operation procedures, refer to the general scan tool operation manual.	Is the value of «Coolant Temp.» 75°C (167°F) or more?	Go to step **11**.	Replace the engine coolant temperature sensor. <Ref. to FU(H6DO)-29, Engine Coolant Temperature Sensor.>
11	**CHECK MASS AIR FLOW AND INTAKE AIR TEMPERATURE SENSOR.** 1) Start the engine and warm up engine until coolant temperature is higher than 75°C (167°F). 2) Place the select lever in "P" range or "N" range. 3) Turn the A/C switch to OFF. 4) Turn all the accessory switches to OFF. 5) Read the value of «Mass Air Flow» using the Subaru Select Monitor or a general scan tool. NOTE: • Subaru Select Monitor For detailed operation procedures, refer to "READ CURRENT DATA FOR ENGINE". <Ref. to EN(H6DO)(diag)-35, Subaru Select Monitor.> • General scan tool For detailed operation procedures, refer to the general scan tool operation manual.	Is the value of «Mass Air Flow» 2.0 — 5.0 g/s (0.26 — 0.66 lb/m)?	Go to step **12**.	Replace the mass air flow and intake air temperature sensor. <Ref. to FU(H6DO)-41, Mass Air Flow and Intake Air Temperature Sensor.>
12	**CHECK MASS AIR FLOW AND INTAKE AIR TEMPERATURE SENSOR.** 1) Start the engine and warm up engine until coolant temperature is higher than 75°C (167°F). 2) Place the select lever in "P" range or "N" range. 3) Turn the A/C switch to OFF. 4) Turn all the accessory switches to OFF. 5) Open the front hood. 6) Measure the ambient temperature. 7) Read the value of «Intake Air Temp.» using the Subaru Select Monitor or a general scan tool. NOTE: • Subaru Select Monitor For detailed operation procedures, refer to "READ CURRENT DATA FOR ENGINE". <Ref. to EN(H6DO)(diag)-35, Subaru Select Monitor.> • General scan tool For detailed operation procedures, refer to the general scan tool operation manual.	Subtract ambient temperature from «Intake Air Temp.». Is the obtained value –10 — 50°C (–18 — 90°F)?	Go to step **13**.	Check the mass air flow and intake air temperature sensor. <Ref. to FU(H6DO)-41, Mass Air Flow and Intake Air Temperature Sensor.>

GETTHEMANUALS.org

	Step	Check	Yes	No
13	**CHECK REAR OXYGEN SENSOR DATA.** 1) Warm up the engine until engine coolant temperature is higher than 75°C (167°F), and keep the engine speed at 3,000 rpm. (2 minutes maximum) 2) Read the value of «Front O2 Sensor #2» using the Subaru Select Monitor or a general scan tool. NOTE: • Subaru Select Monitor For detailed operation procedures, refer to "READ CURRENT DATA FOR ENGINE". <Ref. to EN(H6DO)(diag)-35, Subaru Select Monitor.> • General scan tool For detailed operation procedures, refer to the general scan tool operation manual.	Is the value of «Front O2 Sensor #2» 0.490 V or more?	Go to step **14**.	Go to step **15**.
14	**CHECK REAR OXYGEN SENSOR DATA.** 1) Warm up the engine until engine coolant temperature is higher than 75°C (167°F), and rapidly reduce the engine speed from 3,000 rpm. 2) Read the value of «Front O2 Sensor #2» using the Subaru Select Monitor or a general scan tool. NOTE: • Subaru Select Monitor For detailed operation procedures, refer to "READ CURRENT DATA FOR ENGINE". <Ref. to EN(H6DO)(diag)-35, Subaru Select Monitor.> • General scan tool For detailed operation procedures, refer to the general scan tool operation manual.	Is the value of «Front O2 Sensor #2» 0.250 V or less?	Go to step **16**.	Go to step **15**.
15	**CHECK REAR OXYGEN SENSOR CONNECTOR AND COUPLING CONNECTOR.**	Has water entered the connector?	Completely remove any water inside.	Go to step **17**.
16	**CHECK FRONT OXYGEN (A/F) SENSOR USING REAR OXYGEN SENSOR SIGNAL.** 1) Warm up the engine until engine coolant temperature is higher than 75°C (167°F), then keep the engine idling for 5 minutes or more. 2) Read the value of «Front O2 Sensor #2» using the Subaru Select Monitor or a general scan tool. NOTE: • Subaru Select Monitor For detailed operation procedures, refer to "READ CURRENT DATA FOR ENGINE". <Ref. to EN(H6DO)(diag)-35, Subaru Select Monitor.> • General scan tool For detailed operation procedures, refer to the general scan tool operation manual.	Is the value in «Front O2 Sensor #2» kept at 0.250 V or less for 5 minutes or more?	Replace the front oxygen (A/F) sensor. <Ref. to FU(H6DO)-50, Front Oxygen (A/F) Sensor.>	Go to step **17**.

GETTHEMANUALS.org

	Step	Check	Yes	No
17	**CHECK HARNESS BETWEEN ECM AND REAR OXYGEN SENSOR CONNECTOR.** 1) Turn the ignition switch to OFF. 2) Disconnect the connector from ECM and rear oxygen sensor. 3) Measure the resistance of harness between ECM and rear oxygen sensor connector. ***Connector & terminal*** ***(B135) No. 28 — (E25) No. 3:*** ***(B135) No. 30 — (E25) No. 4:***	Is the resistance less than 1 Ω?	Go to step **18**.	Repair the harness and connector. NOTE: In this case, repair the following item: • Open circuit in harness between ECM and rear oxygen sensor connector • Poor contact of coupling connector
18	**CHECK HARNESS BETWEEN ECM AND REAR OXYGEN SENSOR CONNECTOR.** 1) Connect the connector to ECM. 2) Turn the ignition switch to ON. 3) Measure the voltage between rear oxygen sensor connector and chassis ground. ***Connector & terminal*** ***(E25) No. 3 (+) — Chassis ground (–):***	Is the voltage 0.2 — 0.5 V?	Replace the rear oxygen sensor. <Ref. to FU(H6DO)-52, Rear Oxygen Sensor.>	Go to step **19**.
19	**CHECK OUTPUT SIGNAL OF ECM.** 1) Turn the ignition switch to ON. 2) Measure the voltage between ECM and chassis ground on faulty cylinders. ***Connector & terminal*** ***#1 (B134) No. 10 (+) — Chassis ground (–):*** ***#2 (B134) No. 11 (+) — Chassis ground (–):*** ***#3 (B134) No. 12 (+) — Chassis ground (–):*** ***#4 (B134) No. 13 (+) — Chassis ground (–):*** ***#5 (B134) No. 23 (+) — Chassis ground (–):*** ***#6 (B134) No. 24 (+) — Chassis ground (–):***	Is the voltage 10 V or more?	Go to step **24**.	Go to step **20**.
20	**CHECK HARNESS BETWEEN ECM AND FUEL INJECTOR.** 1) Turn the ignition switch to OFF. 2) Disconnect the connector from fuel injector on faulty cylinders. 3) Measure the resistance between fuel injector connector and engine ground on faulty cylinders. ***Connector & terminal*** ***#1 (E5) No. 1 — Engine ground:*** ***#2 (E16) No. 1 — Engine ground:*** ***#3 (E6) No. 1 — Engine ground:*** ***#4 (E17) No. 1 — Engine ground:*** ***#5 (E43) No. 1 — Engine ground:*** ***#6 (E44) No. 1 — Engine ground:***	Is the resistance 1 MΩ or more?	Go to step **21**.	Repair the short circuit to ground in harness between ECM and fuel injector connector.
21	**CHECK HARNESS BETWEEN ECM AND FUEL INJECTOR.** Measure the resistance of harness between ECM and fuel injector connector on faulty cylinders. ***Connector & terminal*** ***#1 (B134) No. 10 — (E5) No. 1:*** ***#2 (B134) No. 11 — (E16) No. 1:*** ***#3 (B134) No. 12 — (E6) No. 1:*** ***#4 (B134) No. 13 — (E17) No. 1:*** ***#5 (B134) No. 23 — (E43) No. 1:*** ***#6 (B134) No. 24 — (E44) No. 1:***	Is the resistance less than 1 Ω?	Go to step **22**.	Repair the harness and connector. NOTE: In this case, repair the following item: • Open circuit in harness between ECM and fuel injector connector • Poor contact of coupling connector

GETTHEMANUALS.org

	Step	Check	Yes	No
22	**CHECK FUEL INJECTOR.** Measure the resistance between fuel injector terminals on faulty cylinder. ***Terminals*** ***No. 1 — No. 2:***	Is the resistance 5 — 20 Ω?	Go to step **23**.	Replace the faulty fuel injector. <Ref. to FU(H6DO)-44, Fuel Injector.>
23	**CHECK POWER SUPPLY LINE.** 1) Turn the ignition switch to ON. 2) Measure the voltage between fuel injector connector of faulty cylinders and engine ground. ***Connector & terminal*** ***#1 (E5) No. 2 (+) — Engine ground (–):*** ***#2 (E16) No. 2 (+) — Engine ground (–):*** ***#3 (E6) No. 2 (+) — Engine ground (–):*** ***#4 (E17) No. 2 (+) — Engine ground (–):*** ***#5 (E43) No. 2 (+) — Engine ground (–):*** ***#6 (E44) No. 2 (+) — Engine ground (–):***	Is the voltage 10 V or more?	Repair the poor contact of all connectors in fuel injector circuit.	Repair the harness and connector. NOTE: In this case, repair the following item: • Open circuit in harness between the main relay and fuel injector connector on faulty cylinders • Poor contact of coupling connector • Poor contact of main relay connector
24	**CHECK HARNESS BETWEEN ECM AND FUEL INJECTOR.** 1) Turn the ignition switch to OFF. 2) Disconnect the connector from fuel injector on faulty cylinders. 3) Turn the ignition switch to ON. 4) Measure the voltage between ECM and chassis ground on faulty cylinders. ***Connector & terminal*** ***#1 (B134) No. 10 (+) — Chassis ground (–):*** ***#2 (B134) No. 11 (+) — Chassis ground (–):*** ***#3 (B134) No. 12 (+) — Chassis ground (–):*** ***#4 (B134) No. 13 (+) — Chassis ground (–):*** ***#5 (B134) No. 23 (+) — Chassis ground (–):*** ***#6 (B134) No. 24 (+) — Chassis ground (–):***	Is the voltage 10 V or more?	Repair the short circuit to power in harness between ECM and fuel injector connector.	Go to step **25**.
25	**CHECK FUEL INJECTOR.** 1) Turn the ignition switch to OFF. 2) Measure the resistance between fuel injector terminals on faulty cylinder. ***Terminals*** ***No. 1 — No. 2:***	Is the resistance 5 — 20 Ω?	Go to step **26**.	Replace the faulty fuel injector. <Ref. to FU(H6DO)-44, Fuel Injector.>
26	**CHECK INSTALLATION OF CAMSHAFT POSITION SENSOR/CRANKSHAFT POSITION SENSOR.**	Is the camshaft position sensor or crankshaft position sensor loosely installed?	Tighten the camshaft position sensor or crankshaft position sensor.	Go to step **27**.
27	**CHECK CRANK PLATE.**	Is the crank sprocket rusted or the teeth of crank plate broken?	Replace the crank plate. <Ref. to ME(H6DO)-104, Cylinder Block.>	Go to step **28**.
28	**CHECK INSTALLATION CONDITION OF TIMING CHAIN.** Turn the crankshaft using ST, and align the alignment mark on crank sprocket with alignment mark on cylinder block. ST 18252AA000 CRANKSHAFT SOCKET	Is the timing chain dislocated from its proper position?	Correct the installation condition of timing chain. <Ref. to ME(H6DO)-62, Timing Chain Assembly.>	Go to step **29**.

GETTHEMANUALS.org

Step		Check	Yes	No
29	**CHECK FUEL LEVEL.**	Is the fuel meter indication lower than the “Lower” level?	Refill the fuel so that the fuel meter indication is higher than the “Lower” level, and proceed to the next step. Go to step **30**.	Go to step **30**.
30	**CHECK STATUS OF MALFUNCTION INDICATOR LIGHT.** 1) Clear the memory using the Subaru Select Monitor or general scan tool. <Ref. to EN(H6DO)(diag)-57, Clear Memory Mode.> 2) Start the engine, and drive the vehicle 10 minutes or more.	Does the malfunction indicator light illuminate or blink?	Go to step **32**.	Go to step **31**.
31	**CHECK CAUSE OF MISFIRE.**	Was the cause of misfire identified when the engine is running?	Finish diagnostics operation, if the engine has no abnormality.	Repair the poor contact of connector. NOTE: In this case, repair the following item: • Poor contact of ignition coil connector • Poor contact of fuel injector connector on faulty cylinders • Poor contact of ECM connector • Poor contact of coupling connector
32	**CHECK AIR INTAKE SYSTEM.**	Is there any fault in air intake system?	Repair the air intake system. NOTE: Check the following items. • Are there air leaks or air suction caused by loose or dislocated nuts and bolts? • Are there cracks or any disconnection of hoses?	Go to step **33**.
33	**CHECK MISFIRE SYMPTOM.** 1) Turn the ignition switch to ON. 2) Check for DTC. <Ref. to EN(H6DO)(diag)-43, Read Diagnostic Trouble Code (DTC).>	Does the Subaru Select Monitor or general scan tool indicate only one DTC?	Go to step **36**.	Go to step **34**.
34	**CHECK DTC ON DISPLAY.**	Is DTC P0301, P0303 and P0305 displayed?	Go to step **37**.	Go to step **35**.
35	**CHECK DTC ON DISPLAY.**	Is DTC P0302, P0304 and P0306 displayed?	Go to step **38**.	Go to step **39**.

GETTHEMANUALS.org

Step		Check	Yes	No
36	**ONLY ONE CYLINDER.**	Is there any fault in the cylinder?	Repair or replace faulty parts. NOTE: Check the following items. • Spark plug • Ignition coil • Fuel injector • Compression ratio	Check DTC P0171, P0172, P0174 or P0175 using “List of Diagnostic Trouble Code (DTC)”. <Ref. to EN(H6DO)(diag)-85, List of Diagnostic Trouble Code (DTC).>
37	**GROUP OF #1, #3 AND #5 CYLINDERS.**	Is there any fault in #1, #3 and #5 cylinders?	Repair or replace faulty parts. NOTE: Check the following items. • Spark plug • Ignition coil • Fuel injector • Compression ratio • Skipping timing chain teeth	Check DTC P0171, P0172, P0174 or P0175 using “List of Diagnostic Trouble Code (DTC)”. <Ref. to EN(H6DO)(diag)-85, List of Diagnostic Trouble Code (DTC).>
38	**GROUP OF #2, #4 AND #6 CYLINDERS.**	Is there any fault in #2, #4 and #6 cylinders?	Repair or replace faulty parts. NOTE: Check the following items. • Spark plug • Ignition coil • Fuel injector • Compression ratio • Skipping timing chain teeth	Check DTC P0171, P0172, P0174 or P0175 using “List of Diagnostic Trouble Code (DTC)”. <Ref. to EN(H6DO)(diag)-85, List of Diagnostic Trouble Code (DTC).>
39	**CYLINDER AT RANDOM.**	Is the engine idle rough?	Check DTC P0171, P0172, P0174 or P0175 using “List of Diagnostic Trouble Code (DTC)”. <Ref. to EN(H6DO)(diag)-85, List of Diagnostic Trouble Code (DTC).>	Repair or replace faulty parts. NOTE: Check the following items. • Spark plug • Ignition coil • Fuel injector • Compression ratio

GETTHEMANUALS.org

FQ:DTC P2227 BAROMETRIC PRESSURE CIRCUIT RANGE/PERFORMANCE

DTC DETECTING CONDITION:

- Detected when two consecutive driving cycles with fault occur.
- GENERAL DESCRIPTION <Ref. to GD(H6DO)-258, DTC P2227 BAROMETRIC PRESSURE CIRCUIT RANGE/PERFORMANCE, Diagnostic Trouble Code (DTC) Detecting Criteria.>

CAUTION:

After servicing or replacing faulty parts, perform Clear Memory Mode <Ref. to EN(H6DO)(diag)-57, OPERATION, Clear Memory Mode.>, and Inspection Mode <Ref. to EN(H6DO)(diag)-44, PROCEDURE, Inspection Mode.>.

Step	Check	Yes	No
1 **CHECK FOR ANY OTHER DTC ON DISPLAY.**	Is any other DTC displayed?	Check DTC using "List of Diagnostic Trouble Code (DTC)". <Ref. to EN(H6DO)(diag)-85, List of Diagnostic Trouble Code (DTC).>	Replace the ECM. <Ref. to FU(H6DO)-54, Engine Control Module (ECM).> NOTE: The barometric pressure sensor is built into the ECM.

FR:DTC P2228 BAROMETRIC PRESSURE CIRCUIT LOW

DTC DETECTING CONDITION:

- Immediately at fault recognition
- GENERAL DESCRIPTION <Ref. to GD(H6DO)-259, DTC P2228 BAROMETRIC PRESSURE CIRCUIT LOW, Diagnostic Trouble Code (DTC) Detecting Criteria.>

CAUTION:

After servicing or replacing faulty parts, perform Clear Memory Mode <Ref. to EN(H6DO)(diag)-57, OPERATION, Clear Memory Mode.>, and Inspection Mode <Ref. to EN(H6DO)(diag)-44, PROCEDURE, Inspection Mode.>.

Step	Check	Yes	No
1 **CHECK FOR ANY OTHER DTC ON DISPLAY.**	Is any other DTC displayed?	Check DTC using "List of Diagnostic Trouble Code (DTC)". <Ref. to EN(H6DO)(diag)-85, List of Diagnostic Trouble Code (DTC).>	Replace the ECM. <Ref. to FU(H6DO)-54, Engine Control Module (ECM).> NOTE: The barometric pressure sensor is built into the ECM.

GETTHEMANUALS.org

FS:DTC P2229 BAROMETRIC PRESSURE CIRCUIT HIGH

DTC DETECTING CONDITION:

- Immediately at fault recognition
- GENERAL DESCRIPTION <Ref. to GD(H6DO)-260, DTC P2229 BAROMETRIC PRESSURE CIRCUIT HIGH, Diagnostic Trouble Code (DTC) Detecting Criteria.>

CAUTION:

After servicing or replacing faulty parts, perform Clear Memory Mode <Ref. to EN(H6DO)(diag)-57, OPERATION, Clear Memory Mode.>, and Inspection Mode <Ref. to EN(H6DO)(diag)-44, PROCEDURE, Inspection Mode.>.

Step	Check	Yes	No
1 **CHECK FOR ANY OTHER DTC ON DISPLAY.**	Is any other DTC displayed?	Check DTC using "List of Diagnostic Trouble Code (DTC)". <Ref. to EN(H6DO)(diag)-85, List of Diagnostic Trouble Code (DTC).>	Replace the ECM. <Ref. to FU(H6DO)-54, Engine Control Module (ECM).> NOTE: The barometric pressure sensor is built into the ECM.

FT:DTC P2610 ECM/PCM INTERNAL ENGINE OFF TIMER PERFORMANCE

DTC DETECTING CONDITION:

- Detected when two consecutive driving cycles with fault occur.
- GENERAL DESCRIPTION <Ref. to GD(H6DO)-261, DTC P2610 ECM/PCM INTERNAL ENGINE OFF TIMER PERFORMANCE, Diagnostic Trouble Code (DTC) Detecting Criteria.>

CAUTION:

After servicing or replacing faulty parts, perform Clear Memory Mode <Ref. to EN(H6DO)(diag)-57, OPERATION, Clear Memory Mode.>, and Inspection Mode <Ref. to EN(H6DO)(diag)-44, PROCEDURE, Inspection Mode.>.

Step	Check	Yes	No
1 **CHECK FOR ANY OTHER DTC ON DISPLAY.**	Is any other DTC displayed?	Check DTC using "List of Diagnostic Trouble Code (DTC)". <Ref. to EN(H6DO)(diag)-85, List of Diagnostic Trouble Code (DTC).>	Replace the ECM. <Ref. to FU(H6DO)-54, Engine Control Module (ECM).> NOTE: The soak timer IC is built into the ECM.

FU:DTC U0073 CAN FAILURE, BUS 'OFF' DETECTION

NOTE:
For the diagnostic procedure, refer to LAN section. <Ref. to LAN(diag)-2, Basic Diagnostic Procedure.>

FV:DTC U0101 CAN (TCU) DATA NOT LOADED

NOTE:
For the diagnostic procedure, refer to LAN section. <Ref. to LAN(diag)-2, Basic Diagnostic Procedure.>

FW:DTC U0122 CAN (VDC) DATA NOT LOADED

NOTE:
For the diagnostic procedure, refer to LAN section. <Ref. to LAN(diag)-2, Basic Diagnostic Procedure.>

GETTHEMANUALS.org

FX:DTC U0140 CAN (BCU) DATA NOT LOADED

NOTE:
For the diagnostic procedure, refer to LAN section. <Ref. to LAN(diag)-2, Basic Diagnostic Procedure.>

FY:DTC U0402 CAN (TCU) DATA ABNORMAL

NOTE:
For the diagnostic procedure, refer to LAN section. <Ref. to LAN(diag)-2, Basic Diagnostic Procedure.>

FZ:DTC U0416 CAN (VDC) DATA ABNORMAL

NOTE:
For the diagnostic procedure, refer to LAN section. <Ref. to LAN(diag)-2, Basic Diagnostic Procedure.>

GA:DTC U0422 CAN (BCU) DATA ABNORMAL

NOTE:
For the diagnostic procedure, refer to LAN section. <Ref. to LAN(diag)-2, Basic Diagnostic Procedure.>

GETTHEMANUALS.org

20. General Diagnostic Table

A: INSPECTION

NOTE:
Malfunction of parts other than those listed is also possible. <Ref. to ME(H6DO)-132, Engine Trouble in General.>

Symptoms	Faulty parts
1. Engine stalls during idling.	1) Manifold absolute pressure sensor 2) Mass air flow and intake air temperature sensor 3) Ignition parts (*1) 4) Engine coolant temperature sensor (*2) 5) Crankshaft position sensor (*3) 6) Camshaft position sensor (*3) 7) Fuel injection parts (*4) 8) Electronic throttle control
2. Rough idling	1) Manifold absolute pressure sensor 2) Mass air flow and intake air temperature sensor 3) Engine coolant temperature sensor (*2) 4) Ignition parts (*1) 5) Air intake system (*5) 6) Fuel injection parts (*4) 7) Electronic throttle control 8) Crankshaft position sensor (*3) 9) Camshaft position sensor (*3) 10) Oxygen sensor 11) Fuel pump and fuel pump relay 12) EGR control valve
3. Engine does not return to idle.	1) Engine coolant temperature sensor 2) Electronic throttle control 3) Manifold absolute pressure sensor 4) Mass air flow and intake air temperature sensor 5) Accelerator pedal position sensor 6) Engine oil temperature sensor 7) EGR control valve
4. Poor acceleration	1) Manifold absolute pressure sensor 2) Mass air flow and intake air temperature sensor 3) Electronic throttle control 4) Fuel injection parts (*4) 5) Fuel pump and fuel pump relay 6) Engine coolant temperature sensor (*2) 7) Crankshaft position sensor (*3) 8) Camshaft position sensor (*3) 9) EGR control valve 10) Engine torque control signal circuit 11) Ignition parts (*1) 12) Accelerator pedal position sensor 13) Engine oil temperature sensor
5. Engine stalls, hesitates, or sputters at acceleration.	1) Manifold absolute pressure sensor 2) Mass air flow and intake air temperature sensor 3) Engine coolant temperature sensor (*2) 4) Crankshaft position sensor (*3) 5) Camshaft position sensor (*3) 6) Purge control solenoid valve 7) Fuel injection parts (*4) 8) Electronic throttle control 9) Fuel pump and fuel pump relay 10) EGR control valve

GETTHEMANUALS.org

General Diagnostic Table

Symptoms	Faulty parts
6. Surging	1) Mass air flow and intake air temperature sensor 2) Manifold absolute pressure sensor 3) Engine coolant temperature sensor (*2) 4) Crankshaft position sensor (*3) 5) Camshaft position sensor (*3) 6) Fuel injection parts (*4) 7) Electronic throttle control 8) Fuel pump and fuel pump relay 9) EGR control valve
7. Spark knock	1) Mass air flow and intake air temperature sensor 2) Manifold absolute pressure sensor 3) Engine coolant temperature sensor 4) Knock sensor 5) Fuel injection parts (*4) 6) Fuel pump and fuel pump relay 7) EGR control valve
8. After burning in exhaust system	1) Mass air flow and intake air temperature sensor 2) Manifold absolute pressure sensor 3) Engine coolant temperature sensor (*2) 4) Fuel injection parts (*4) 5) Fuel pump and fuel pump relay

*1: Check ignition coil and spark plug.
*2: Indicate the symptom occurring only in cold temperatures.
*3: Ensure secure installation.
*4: Check the fuel injector and fuel pressure regulator.
*5: Inspect for air leak in air intake system.

GETTHEMANUALS.org

GENERAL DESCRIPTION

GD(H6DO)

Page

1. List of Diagnostic Trouble Code (DTC) 2
2. Diagnostic Trouble Code (DTC) Detecting Criteria 11

GETtheMANUALS.org

1. List of Diagnostic Trouble Code (DTC)

A: LIST

DTC	Item	Index
P0011	Intake Camshaft Position - Timing Over-Advanced or System Performance (Bank 1)	<Ref. to GD(H6DO)-11, DTC P0011 INTAKE CAMSHAFT POSITION - TIMING OVER-ADVANCED OR SYSTEM PERFORMANCE (BANK 1), Diagnostic Trouble Code (DTC) Detecting Criteria.>
P0014	Exhaust AVCS System 1 (Range/ Performance)	<Ref. to GD(H6DO)-13, DTC P0014 EXHAUST AVCS SYSTEM 1 (RANGE/ PERFORMANCE), Diagnostic Trouble Code (DTC) Detecting Criteria.>
P0016	Crankshaft Position - Camshaft Position Correlation (Bank1)	<Ref. to GD(H6DO)-15, DTC P0016 CRANKSHAFT POSITION - CAMSHAFT POSITION CORRELATION (BANK1), Diagnostic Trouble Code (DTC) Detecting Criteria.>
P0017	Crank and Cam Timing B System Failure (Bank 1)	<Ref. to GD(H6DO)-17, DTC P0017 CRANK AND CAM TIMING B SYSTEM FAILURE (BANK 1), Diagnostic Trouble Code (DTC) Detecting Criteria.>
P0018	Crankshaft Position - Camshaft Position Correlation (Bank2)	<Ref. to GD(H6DO)-19, DTC P0018 CRANKSHAFT POSITION - CAMSHAFT POSITION CORRELATION (BANK2), Diagnostic Trouble Code (DTC) Detecting Criteria.>
P0019	Crank and Cam Timing B System Failure (Bank 2)	<Ref. to GD(H6DO)-19, DTC P0019 CRANK AND CAM TIMING B SYSTEM FAILURE (BANK 2), Diagnostic Trouble Code (DTC) Detecting Criteria.>
P0021	Intake Camshaft Position - Timing Over-Advanced or System Performance (Bank 2)	<Ref. to GD(H6DO)-19, DTC P0021 INTAKE CAMSHAFT POSITION - TIMING OVER-ADVANCED OR SYSTEM PERFORMANCE (BANK 2), Diagnostic Trouble Code (DTC) Detecting Criteria.>
P0024	Exhaust AVCS System 2 (Range/ Performance)	<Ref. to GD(H6DO)-19, DTC P0024 EXHAUST AVCS SYSTEM 2 (RANGE/ PERFORMANCE), Diagnostic Trouble Code (DTC) Detecting Criteria.>
P0030	HO2S Heater Control Circuit (Bank 1 Sensor 1)	<Ref. to GD(H6DO)-20, DTC P0030 HO2S HEATER CONTROL CIRCUIT (BANK 1 SENSOR 1), Diagnostic Trouble Code (DTC) Detecting Criteria.>
P0031	HO2S Heater Control Circuit Low (Bank 1 Sensor 1)	<Ref. to GD(H6DO)-22, DTC P0031 HO2S HEATER CONTROL CIRCUIT LOW (BANK 1 SENSOR 1), Diagnostic Trouble Code (DTC) Detecting Criteria.>
P0032	HO2S Heater Control Circuit High (Bank 1 Sensor 1)	<Ref. to GD(H6DO)-24, DTC P0032 HO2S HEATER CONTROL CIRCUIT HIGH (BANK 1 SENSOR 1), Diagnostic Trouble Code (DTC) Detecting Criteria.>
P0037	HO2S Heater Control Circuit Low (Bank 1 Sensor 2)	<Ref. to GD(H6DO)-26, DTC P0037 HO2S HEATER CONTROL CIRCUIT LOW (BANK 1 SENSOR 2), Diagnostic Trouble Code (DTC) Detecting Criteria.>
P0038	HO2S Heater Control Circuit High (Bank 1 Sensor 2)	<Ref. to GD(H6DO)-28, DTC P0038 HO2S HEATER CONTROL CIRCUIT HIGH (BANK 1 SENSOR 2), Diagnostic Trouble Code (DTC) Detecting Criteria.>
P0050	HO2S Heater Control Circuit (Bank 2 Sensor 1)	<Ref. to GD(H6DO)-30, DTC P0050 HO2S HEATER CONTROL CIRCUIT (BANK 2 SENSOR 1), Diagnostic Trouble Code (DTC) Detecting Criteria.>
P0051	HO2S Heater Control Circuit Low (Bank 2 Sensor 1)	<Ref. to GD(H6DO)-30, DTC P0051 HO2S HEATER CONTROL CIRCUIT LOW (BANK 2 SENSOR 1), Diagnostic Trouble Code (DTC) Detecting Criteria.>
P0052	HO2S Heater Control Circuit High (Bank 2 Sensor 1)	<Ref. to GD(H6DO)-30, DTC P0052 HO2S HEATER CONTROL CIRCUIT HIGH (BANK 2 SENSOR 1), Diagnostic Trouble Code (DTC) Detecting Criteria.>
P0057	HO2S Heater Control Circuit Low (Bank 2 Sensor 2)	<Ref. to GD(H6DO)-30, DTC P0057 HO2S HEATER CONTROL CIRCUIT LOW (BANK 2 SENSOR 2), Diagnostic Trouble Code (DTC) Detecting Criteria.>
P0058	HO2S Heater Control Circuit High (Bank 2 Sensor 2)	<Ref. to GD(H6DO)-30, DTC P0058 HO2S HEATER CONTROL CIRCUIT HIGH (BANK 2 SENSOR 2), Diagnostic Trouble Code (DTC) Detecting Criteria.>
P0068	MAP/MAF - Throttle Position Correlation	<Ref. to GD(H6DO)-31, DTC P0068 MAP/MAF - THROTTLE POSITION CORRELATION, Diagnostic Trouble Code (DTC) Detecting Criteria.>
P0101	Mass or Volume Air Flow Circuit Range/Performance	<Ref. to GD(H6DO)-33, DTC P0101 MASS OR VOLUME AIR FLOW CIRCUIT RANGE/PERFORMANCE, Diagnostic Trouble Code (DTC) Detecting Criteria.>

GETtheMANUALS.org

List of Diagnostic Trouble Code (DTC)

DTC	Item	Index
P0102	Mass or Volume Air Flow Circuit Low Input	<Ref. to GD(H6DO)-35, DTC P0102 MASS OR VOLUME AIR FLOW CIRCUIT LOW INPUT, Diagnostic Trouble Code (DTC) Detecting Criteria.>
P0103	Mass or Volume Air Flow Circuit High Input	<Ref. to GD(H6DO)-37, DTC P0103 MASS OR VOLUME AIR FLOW CIRCUIT HIGH INPUT, Diagnostic Trouble Code (DTC) Detecting Criteria.>
P0107	Manifold Absolute Pressure/Barometric Pressure Circuit Low Input	<Ref. to GD(H6DO)-39, DTC P0107 MANIFOLD ABSOLUTE PRESSURE/ BAROMETRIC PRESSURE CIRCUIT LOW INPUT, Diagnostic Trouble Code (DTC) Detecting Criteria.>
P0108	Manifold Absolute Pressure/Barometric Pressure Circuit High Input	<Ref. to GD(H6DO)-41, DTC P0108 MANIFOLD ABSOLUTE PRESSURE/ BAROMETRIC PRESSURE CIRCUIT HIGH INPUT, Diagnostic Trouble Code (DTC) Detecting Criteria.>
P0111	Intake Air Temperature Sensor 1 Circuit Range/Performance	<Ref. to GD(H6DO)-43, DTC P0111 INTAKE AIR TEMPERATURE SENSOR 1 CIRCUIT RANGE/PERFORMANCE, Diagnostic Trouble Code (DTC) Detecting Criteria.>
P0112	Intake Air Temperature Sensor 1 Circuit Low	<Ref. to GD(H6DO)-46, DTC P0112 INTAKE AIR TEMPERATURE SENSOR 1 CIRCUIT LOW, Diagnostic Trouble Code (DTC) Detecting Criteria.>
P0113	Intake Air Temperature Sensor 1 Circuit High	<Ref. to GD(H6DO)-48, DTC P0113 INTAKE AIR TEMPERATURE SENSOR 1 CIRCUIT HIGH, Diagnostic Trouble Code (DTC) Detecting Criteria.>
P0117	Engine Coolant Temperature Circuit Low	<Ref. to GD(H6DO)-50, DTC P0117 ENGINE COOLANT TEMPERATURE CIRCUIT LOW, Diagnostic Trouble Code (DTC) Detecting Criteria.>
P0118	Engine Coolant Temperature Circuit High	<Ref. to GD(H6DO)-52, DTC P0118 ENGINE COOLANT TEMPERATURE CIRCUIT HIGH, Diagnostic Trouble Code (DTC) Detecting Criteria.>
P0122	Throttle/Pedal Position Sensor/ Switch “A” Circuit Low	<Ref. to GD(H6DO)-54, DTC P0122 THROTTLE/PEDAL POSITION SENSOR/SWITCH “A” CIRCUIT LOW, Diagnostic Trouble Code (DTC) Detecting Criteria.>
P0123	Throttle/Pedal Position Sensor/ Switch “A” Circuit High	<Ref. to GD(H6DO)-56, DTC P0123 THROTTLE/PEDAL POSITION SENSOR/SWITCH “A” CIRCUIT HIGH, Diagnostic Trouble Code (DTC) Detecting Criteria.>
P0125	Insufficient Coolant Temperature for Closed Loop Fuel Control	<Ref. to GD(H6DO)-58, DTC P0125 INSUFFICIENT COOLANT TEMPERATURE FOR CLOSED LOOP FUEL CONTROL, Diagnostic Trouble Code (DTC) Detecting Criteria.>
P0126	Insufficient Engine Coolant Temperature for Stable Operation	<Ref. to GD(H6DO)-60, DTC P0126 INSUFFICIENT ENGINE COOLANT TEMPERATURE FOR STABLE OPERATION, Diagnostic Trouble Code (DTC) Detecting Criteria.>
P0128	Coolant Thermostat (Engine Coolant Temperature Below Thermostat Regulating Temperature)	<Ref. to GD(H6DO)-62, DTC P0128 COOLANT THERMOSTAT (ENGINE COOLANT TEMPERATURE BELOW THERMOSTAT REGULATING TEMPERATURE), Diagnostic Trouble Code (DTC) Detecting Criteria.>
P0131	O2 Sensor Circuit Low Voltage (Bank 1 Sensor 1)	<Ref. to GD(H6DO)-66, DTC P0131 O2 SENSOR CIRCUIT LOW VOLTAGE (BANK 1 SENSOR 1), Diagnostic Trouble Code (DTC) Detecting Criteria.>
P0132	O2 Sensor Circuit High Voltage (Bank 1 Sensor 1)	<Ref. to GD(H6DO)-68, DTC P0132 O2 SENSOR CIRCUIT HIGH VOLTAGE (BANK 1 SENSOR 1), Diagnostic Trouble Code (DTC) Detecting Criteria.>
P0134	O2 Sensor Circuit No Activity Detected (Bank 1 Sensor 1)	<Ref. to GD(H6DO)-70, DTC P0134 O2 SENSOR CIRCUIT NO ACTIVITY DETECTED (BANK 1 SENSOR 1), Diagnostic Trouble Code (DTC) Detecting Criteria.>
P0137	O2 Sensor Circuit Low Voltage (Bank 1 Sensor 2)	<Ref. to GD(H6DO)-72, DTC P0137 O2 SENSOR CIRCUIT LOW VOLTAGE (BANK 1 SENSOR 2), Diagnostic Trouble Code (DTC) Detecting Criteria.>
P0138	O2 Sensor Circuit High Voltage (Bank 1 Sensor 2)	<Ref. to GD(H6DO)-75, DTC P0138 O2 SENSOR CIRCUIT HIGH VOLTAGE (BANK 1 SENSOR 2), Diagnostic Trouble Code (DTC) Detecting Criteria.>
P013A	O2 Sensor Slow Response - Rich to Lean (Bank 1 Sensor 2)	<Ref. to GD(H6DO)-76, DTC P013A O2 SENSOR SLOW RESPONSE - RICH TO LEAN (BANK 1 SENSOR 2), Diagnostic Trouble Code (DTC) Detecting Criteria.>
P013B	O2 Sensor Slow Response - Lean to Rich (Bank 1 Sensor 2)	<Ref. to GD(H6DO)-78, DTC P013B O2 SENSOR SLOW RESPONSE - LEAN TO RICH (BANK 1 SENSOR 2), Diagnostic Trouble Code (DTC) Detecting Criteria.>
P013C	O2 Sensor Slow Response - Rich to Lean (Bank 2 Sensor 2)	<Ref. to GD(H6DO)-80, DTC P013C O2 SENSOR SLOW RESPONSE - RICH TO LEAN (BANK 2 SENSOR 2), Diagnostic Trouble Code (DTC) Detecting Criteria.>

GETtheMANUALS.org

List of Diagnostic Trouble Code (DTC)

DTC	Item	Index
P013D	O2 Sensor Slow Response - Lean to Rich (Bank 2 Sensor 2)	<Ref. to GD(H6DO)-80, DTC P013D O2 SENSOR SLOW RESPONSE - LEAN TO RICH (BANK 2 SENSOR 2), Diagnostic Trouble Code (DTC) Detecting Criteria.>
P013E	O2 Sensor Delayed Response - Rich to Lean (Bank 1 Sensor 2)	<Ref. to GD(H6DO)-81, DTC P013E O2 SENSOR DELAYED RESPONSE - RICH TO LEAN (BANK 1 SENSOR 2), Diagnostic Trouble Code (DTC) Detecting Criteria.>
P013F	O2 Sensor Delayed Response - Lean to Rich (Bank 1 Sensor 2)	<Ref. to GD(H6DO)-83, DTC P013F O2 SENSOR DELAYED RESPONSE - LEAN TO RICH (BANK 1 SENSOR 2), Diagnostic Trouble Code (DTC) Detecting Criteria.>
P0140	O2 Sensor Circuit No Activity Detected (Bank1 Sensor2)	<Ref. to GD(H6DO)-85, DTC P0140 O2 SENSOR CIRCUIT NO ACTIVITY DETECTED (BANK1 SENSOR2), Diagnostic Trouble Code (DTC) Detecting Criteria.>
P0141	O2 Sensor Heater Circuit (Bank1 Sensor2)	<Ref. to GD(H6DO)-87, DTC P0141 O2 SENSOR HEATER CIRCUIT (BANK1 SENSOR2), Diagnostic Trouble Code (DTC) Detecting Criteria.>
P014A	O2 Sensor Delayed Response - Rich to Lean (Bank 2 Sensor 2)	<Ref. to GD(H6DO)-89, DTC P014A O2 SENSOR DELAYED RESPONSE - RICH TO LEAN (BANK 2 SENSOR 2), Diagnostic Trouble Code (DTC) Detecting Criteria.>
P014B	O2 Sensor Delayed Response - Lean to Rich (Bank 2 Sensor 2)	<Ref. to GD(H6DO)-89, DTC P014B O2 SENSOR DELAYED RESPONSE - LEAN TO RICH (BANK 2 SENSOR 2), Diagnostic Trouble Code (DTC) Detecting Criteria.>
P014C	O2 Sensor Slow Response - Rich to Lean (Bank 1 Sensor 1)	<Ref. to GD(H6DO)-90, DTC P014C O2 SENSOR SLOW RESPONSE - RICH TO LEAN (BANK 1 SENSOR 1), Diagnostic Trouble Code (DTC) Detecting Criteria.>
P014D	O2 Sensor Slow Response - Lean to Rich (Bank 1 Sensor 1)	<Ref. to GD(H6DO)-93, DTC P014D O2 SENSOR SLOW RESPONSE - LEAN TO RICH (BANK 1 SENSOR 1), Diagnostic Trouble Code (DTC) Detecting Criteria.>
P014E	O2 Sensor Slow Response - Rich to Lean (Bank 2 Sensor 1)	<Ref. to GD(H6DO)-93, DTC P014E O2 SENSOR SLOW RESPONSE - RICH TO LEAN (BANK 2 SENSOR 1), Diagnostic Trouble Code (DTC) Detecting Criteria.>
P014F	O2 Sensor Slow Response - Lean to Rich (Bank 2 Sensor 1)	<Ref. to GD(H6DO)-93, DTC P014F O2 SENSOR SLOW RESPONSE - LEAN TO RICH (BANK 2 SENSOR 1), Diagnostic Trouble Code (DTC) Detecting Criteria.>
P0151	O2 Sensor Circuit Low Voltage (Bank 2 Sensor 1)	<Ref. to GD(H6DO)-93, DTC P0151 O2 SENSOR CIRCUIT LOW VOLTAGE (BANK 2 SENSOR 1), Diagnostic Trouble Code (DTC) Detecting Criteria.>
P0152	O2 Sensor Circuit High Voltage (Bank 2 Sensor 1)	<Ref. to GD(H6DO)-93, DTC P0152 O2 SENSOR CIRCUIT HIGH VOLTAGE (BANK 2 SENSOR 1), Diagnostic Trouble Code (DTC) Detecting Criteria.>
P0154	O2 Sensor Circuit No Activity Detected (Bank 2 Sensor 1)	<Ref. to GD(H6DO)-93, DTC P0154 O2 SENSOR CIRCUIT NO ACTIVITY DETECTED (BANK 2 SENSOR 1), Diagnostic Trouble Code (DTC) Detecting Criteria.>
P0157	O2 Sensor Circuit Low Voltage (Bank 2 Sensor 2)	<Ref. to GD(H6DO)-93, DTC P0157 O2 SENSOR CIRCUIT LOW VOLTAGE (BANK 2 SENSOR 2), Diagnostic Trouble Code (DTC) Detecting Criteria.>
P0158	O2 Sensor Circuit High Voltage (Bank 2 Sensor 2)	<Ref. to GD(H6DO)-94, DTC P0158 O2 SENSOR CIRCUIT HIGH VOLTAGE (BANK 2 SENSOR 2), Diagnostic Trouble Code (DTC) Detecting Criteria.>
P015A	O2 Sensor Delayed Response - Rich to Lean (Bank 1 Sensor 1)	<Ref. to GD(H6DO)-95, DTC P015A O2 SENSOR DELAYED RESPONSE - RICH TO LEAN (BANK 1 SENSOR 1), Diagnostic Trouble Code (DTC) Detecting Criteria.>
P015B	O2 Sensor Delayed Response - Lean to Rich (Bank 1 Sensor 1)	<Ref. to GD(H6DO)-99, DTC P015B O2 SENSOR DELAYED RESPONSE - LEAN TO RICH (BANK 1 SENSOR 1), Diagnostic Trouble Code (DTC) Detecting Criteria.>
P015C	O2 Sensor Delayed Response - Rich to Lean (Bank 2 Sensor 1)	<Ref. to GD(H6DO)-99, DTC P015C O2 SENSOR DELAYED RESPONSE - RICH TO LEAN (BANK 2 SENSOR 1), Diagnostic Trouble Code (DTC) Detecting Criteria.>
P015D	O2 Sensor Delayed Response - Lean to Rich (Bank 2 Sensor 1)	<Ref. to GD(H6DO)-99, DTC P015D O2 SENSOR DELAYED RESPONSE - LEAN TO RICH (BANK 2 SENSOR 1), Diagnostic Trouble Code (DTC) Detecting Criteria.>

GETtheMANUALS.org

List of Diagnostic Trouble Code (DTC)

DTC	Item	Index
P0160	O2 Sensor Circuit No Activity Detected (Bank2 Sensor2)	<Ref. to GD(H6DO)-99, DTC P0160 O2 SENSOR CIRCUIT NO ACTIVITY DETECTED (BANK2 SENSOR2), Diagnostic Trouble Code (DTC) Detecting Criteria.>
P0161	O2 Sensor Heater Circuit (Bank2 Sensor2)	<Ref. to GD(H6DO)-99, DTC P0161 O2 SENSOR HEATER CIRCUIT (BANK2 SENSOR2), Diagnostic Trouble Code (DTC) Detecting Criteria.>
P0171	System Too Lean (Bank 1)	<Ref. to GD(H6DO)-100, DTC P0171 SYSTEM TOO LEAN (BANK 1), Diagnostic Trouble Code (DTC) Detecting Criteria.>
P0172	System Too Rich (Bank 1)	<Ref. to GD(H6DO)-101, DTC P0172 SYSTEM TOO RICH (BANK 1), Diagnostic Trouble Code (DTC) Detecting Criteria.>
P0174	System Too Lean (Bank 2)	<Ref. to GD(H6DO)-103, DTC P0174 SYSTEM TOO LEAN (BANK 2), Diagnostic Trouble Code (DTC) Detecting Criteria.>
P0175	System Too Rich (Bank 2)	<Ref. to GD(H6DO)-103, DTC P0175 SYSTEM TOO RICH (BANK 2), Diagnostic Trouble Code (DTC) Detecting Criteria.>
P0181	Fuel Temperature Sensor “A” Circuit Range/Performance	<Ref. to GD(H6DO)-104, DTC P0181 FUEL TEMPERATURE SENSOR “A” CIRCUIT RANGE/PERFORMANCE, Diagnostic Trouble Code (DTC) Detecting Criteria.>
P0182	Fuel Temperature Sensor “A” Circuit Low Input	<Ref. to GD(H6DO)-107, DTC P0182 FUEL TEMPERATURE SENSOR “A” CIRCUIT LOW INPUT, Diagnostic Trouble Code (DTC) Detecting Criteria.>
P0183	Fuel Temperature Sensor “A” Circuit High Input	<Ref. to GD(H6DO)-109, DTC P0183 FUEL TEMPERATURE SENSOR “A” CIRCUIT HIGH INPUT, Diagnostic Trouble Code (DTC) Detecting Criteria.>
P0196	Engine Oil Temperature Sensor Circuit Range/Performance	<Ref. to GD(H6DO)-111, DTC P0196 ENGINE OIL TEMPERATURE SENSOR CIRCUIT RANGE/PERFORMANCE, Diagnostic Trouble Code (DTC) Detecting Criteria.>
P0197	Engine Oil Temperature Sensor Low	<Ref. to GD(H6DO)-113, DTC P0197 ENGINE OIL TEMPERATURE SENSOR LOW, Diagnostic Trouble Code (DTC) Detecting Criteria.>
P0198	Engine Oil Temperature Sensor High	<Ref. to GD(H6DO)-114, DTC P0198 ENGINE OIL TEMPERATURE SENSOR HIGH, Diagnostic Trouble Code (DTC) Detecting Criteria.>
P0201	Injector #1	<Ref. to GD(H6DO)-115, DTC P0201 INJECTOR #1, Diagnostic Trouble Code (DTC) Detecting Criteria.>
P0202	Injector #2	<Ref. to GD(H6DO)-116, DTC P0202 INJECTOR #2, Diagnostic Trouble Code (DTC) Detecting Criteria.>
P0203	Injector #3	<Ref. to GD(H6DO)-116, DTC P0203 INJECTOR #3, Diagnostic Trouble Code (DTC) Detecting Criteria.>
P0204	Injector #4	<Ref. to GD(H6DO)-116, DTC P0204 INJECTOR #4, Diagnostic Trouble Code (DTC) Detecting Criteria.>
P0205	Injector #5	<Ref. to GD(H6DO)-116, DTC P0205 INJECTOR #5, Diagnostic Trouble Code (DTC) Detecting Criteria.>
P0206	Injector #6	<Ref. to GD(H6DO)-116, DTC P0206 INJECTOR #6, Diagnostic Trouble Code (DTC) Detecting Criteria.>
P0222	Throttle/Pedal Position Sensor/ Switch “B” Circuit Low	<Ref. to GD(H6DO)-117, DTC P0222 THROTTLE/PEDAL POSITION SENSOR/SWITCH “B” CIRCUIT LOW, Diagnostic Trouble Code (DTC) Detecting Criteria.>
P0223	Throttle/Pedal Position Sensor/ Switch “B” Circuit High	<Ref. to GD(H6DO)-119, DTC P0223 THROTTLE/PEDAL POSITION SENSOR/SWITCH “B” CIRCUIT HIGH, Diagnostic Trouble Code (DTC) Detecting Criteria.>
P0230	Fuel Pump Primary Circuit	<Ref. to GD(H6DO)-121, DTC P0230 FUEL PUMP PRIMARY CIRCUIT, Diagnostic Trouble Code (DTC) Detecting Criteria.>
P0301	Cylinder 1 Misfire Detected	<Ref. to GD(H6DO)-123, DTC P0301 CYLINDER 1 MISFIRE DETECTED, Diagnostic Trouble Code (DTC) Detecting Criteria.>
P0302	Cylinder 2 Misfire Detected	<Ref. to GD(H6DO)-129, DTC P0302 CYLINDER 2 MISFIRE DETECTED, Diagnostic Trouble Code (DTC) Detecting Criteria.>
P0303	Cylinder 3 Misfire Detected	<Ref. to GD(H6DO)-129, DTC P0303 CYLINDER 3 MISFIRE DETECTED, Diagnostic Trouble Code (DTC) Detecting Criteria.>
P0304	Cylinder 4 Misfire Detected	<Ref. to GD(H6DO)-129, DTC P0304 CYLINDER 4 MISFIRE DETECTED, Diagnostic Trouble Code (DTC) Detecting Criteria.>

GETtheMANUALS.org

List of Diagnostic Trouble Code (DTC)

DTC	Item	Index
P0305	Cylinder 5 Misfire Detected	<Ref. to GD(H6DO)-129, DTC P0305 CYLINDER 5 MISFIRE DETECTED, Diagnostic Trouble Code (DTC) Detecting Criteria.>
P0306	Cylinder 6 Misfire Detected	<Ref. to GD(H6DO)-129, DTC P0306 CYLINDER 6 MISFIRE DETECTED, Diagnostic Trouble Code (DTC) Detecting Criteria.>
P0327	Knock Sensor 1 Circuit Low (Bank 1 or Single Sensor)	<Ref. to GD(H6DO)-130, DTC P0327 KNOCK SENSOR 1 CIRCUIT LOW (BANK 1 OR SINGLE SENSOR), Diagnostic Trouble Code (DTC) Detecting Criteria.>
P0328	Knock Sensor 1 Circuit High (Bank 1 or Single Sensor)	<Ref. to GD(H6DO)-132, DTC P0328 KNOCK SENSOR 1 CIRCUIT HIGH (BANK 1 OR SINGLE SENSOR), Diagnostic Trouble Code (DTC) Detecting Criteria.>
P0332	Knock Sensor 2 Circuit Low (Bank 2)	<Ref. to GD(H6DO)-133, DTC P0332 KNOCK SENSOR 2 CIRCUIT LOW (BANK 2), Diagnostic Trouble Code (DTC) Detecting Criteria.>
P0333	Knock Sensor 2 Circuit High (Bank 2)	<Ref. to GD(H6DO)-133, DTC P0333 KNOCK SENSOR 2 CIRCUIT HIGH (BANK 2), Diagnostic Trouble Code (DTC) Detecting Criteria.>
P0335	Crankshaft Position Sensor “A” Circuit	<Ref. to GD(H6DO)-134, DTC P0335 CRANKSHAFT POSITION SENSOR “A” CIRCUIT, Diagnostic Trouble Code (DTC) Detecting Criteria.>
P0336	Crankshaft Position Sensor “A” Circuit Range/Performance	<Ref. to GD(H6DO)-136, DTC P0336 CRANKSHAFT POSITION SENSOR “A” CIRCUIT RANGE/PERFORMANCE, Diagnostic Trouble Code (DTC) Detecting Criteria.>
P0340	Camshaft Position Sensor “A” Circuit (Bank 1 or Single Sensor)	<Ref. to GD(H6DO)-138, DTC P0340 CAMSHAFT POSITION SENSOR “A” CIRCUIT (BANK 1 OR SINGLE SENSOR), Diagnostic Trouble Code (DTC) Detecting Criteria.>
P0345	Camshaft Position Sensor “A” Circuit (Bank 2)	<Ref. to GD(H6DO)-140, DTC P0345 CAMSHAFT POSITION SENSOR “A” CIRCUIT (BANK 2), Diagnostic Trouble Code (DTC) Detecting Criteria.>
P0351	Ignition Coil A Primary/Secondary Circuit	<Ref. to GD(H6DO)-141, DTC P0351 IGNITION COIL A PRIMARY/SECONDARY CIRCUIT, Diagnostic Trouble Code (DTC) Detecting Criteria.>
P0352	Ignition Coil B Primary/Secondary Circuit	<Ref. to GD(H6DO)-142, DTC P0352 IGNITION COIL B PRIMARY/SECONDARY CIRCUIT, Diagnostic Trouble Code (DTC) Detecting Criteria.>
P0353	Ignition Coil C Primary/Secondary Circuit	<Ref. to GD(H6DO)-142, DTC P0353 IGNITION COIL C PRIMARY/SECONDARY CIRCUIT, Diagnostic Trouble Code (DTC) Detecting Criteria.>
P0354	Ignition Coil D Primary/Secondary Circuit	<Ref. to GD(H6DO)-142, DTC P0354 IGNITION COIL D PRIMARY/SECONDARY CIRCUIT, Diagnostic Trouble Code (DTC) Detecting Criteria.>
P0355	Ignition Coil E Primary/Secondary Circuit	<Ref. to GD(H6DO)-142, DTC P0355 IGNITION COIL E PRIMARY/SECONDARY CIRCUIT, Diagnostic Trouble Code (DTC) Detecting Criteria.>
P0356	Ignition Coil F Primary/Secondary Circuit	<Ref. to GD(H6DO)-142, DTC P0356 IGNITION COIL F PRIMARY/SECONDARY CIRCUIT, Diagnostic Trouble Code (DTC) Detecting Criteria.>
P0365	Camshaft Position Sensor “B” Circuit (Bank 1)	<Ref. to GD(H6DO)-143, DTC P0365 CAMSHAFT POSITION SENSOR “B” CIRCUIT (BANK 1), Diagnostic Trouble Code (DTC) Detecting Criteria.>
P0390	Camshaft Position Sensor “B” Circuit (Bank 2)	<Ref. to GD(H6DO)-145, DTC P0390 CAMSHAFT POSITION SENSOR “B” CIRCUIT (BANK 2), Diagnostic Trouble Code (DTC) Detecting Criteria.>
P0400	Exhaust Gas Recirculation Flow	<Ref. to GD(H6DO)-146, DTC P0400 EXHAUST GAS RECIRCULATION FLOW, Diagnostic Trouble Code (DTC) Detecting Criteria.>
P0420	Catalyst System Efficiency Below Threshold (Bank 1)	<Ref. to GD(H6DO)-149, DTC P0420 CATALYST SYSTEM EFFICIENCY BELOW THRESHOLD (BANK 1), Diagnostic Trouble Code (DTC) Detecting Criteria.>
P0442	Evaporative Emission Control System Leak Detected (Small Leak)	<Ref. to GD(H6DO)-151, DTC P0442 EVAPORATIVE EMISSION CONTROL SYSTEM LEAK DETECTED (SMALL LEAK), Diagnostic Trouble Code (DTC) Detecting Criteria.>
P0447	Evaporative Emission Control System Vent Control Circuit Open	<Ref. to GD(H6DO)-165, DTC P0447 EVAPORATIVE EMISSION CONTROL SYSTEM VENT CONTROL CIRCUIT OPEN, Diagnostic Trouble Code (DTC) Detecting Criteria.>
P0448	Evaporative Emission Control System Vent Control Circuit Shorted	<Ref. to GD(H6DO)-167, DTC P0448 EVAPORATIVE EMISSION CONTROL SYSTEM VENT CONTROL CIRCUIT SHORTED, Diagnostic Trouble Code (DTC) Detecting Criteria.>

GETtheMANUALS.org

List of Diagnostic Trouble Code (DTC)

DTC	Item	Index
P0451	Evaporative Emission Control System Pressure Sensor	<Ref. to GD(H6DO)-169, DTC P0451 EVAPORATIVE EMISSION CONTROL SYSTEM PRESSURE SENSOR, Diagnostic Trouble Code (DTC) Detecting Criteria.>
P0452	Evaporative Emission Control System Pressure Sensor Low Input	<Ref. to GD(H6DO)-173, DTC P0452 EVAPORATIVE EMISSION CONTROL SYSTEM PRESSURE SENSOR LOW INPUT, Diagnostic Trouble Code (DTC) Detecting Criteria.>
P0453	Evaporative Emission Control System Pressure Sensor High Input	<Ref. to GD(H6DO)-175, DTC P0453 EVAPORATIVE EMISSION CONTROL SYSTEM PRESSURE SENSOR HIGH INPUT, Diagnostic Trouble Code (DTC) Detecting Criteria.>
P0456	Evaporative Emission Control System Leak Detected (Very Small Leak)	<Ref. to GD(H6DO)-177, DTC P0456 EVAPORATIVE EMISSION CONTROL SYSTEM LEAK DETECTED (VERY SMALL LEAK), Diagnostic Trouble Code (DTC) Detecting Criteria.>
P0457	Evaporative Emission Control System Leak Detected (Fuel Cap Loose/Off)	<Ref. to GD(H6DO)-177, DTC P0457 EVAPORATIVE EMISSION CONTROL SYSTEM LEAK DETECTED (FUEL CAP LOOSE/OFF), Diagnostic Trouble Code (DTC) Detecting Criteria.>
P0458	Evaporative Emission System Purge Control Valve Circuit Low	<Ref. to GD(H6DO)-178, DTC P0458 EVAPORATIVE EMISSION SYSTEM PURGE CONTROL VALVE CIRCUIT LOW, Diagnostic Trouble Code (DTC) Detecting Criteria.>
P0459	Evaporative Emission System Purge Control Valve Circuit High	<Ref. to GD(H6DO)-180, DTC P0459 EVAPORATIVE EMISSION SYSTEM PURGE CONTROL VALVE CIRCUIT HIGH, Diagnostic Trouble Code (DTC) Detecting Criteria.>
P0461	Fuel Level Sensor “A” Circuit Range/Performance	<Ref. to GD(H6DO)-182, DTC P0461 FUEL LEVEL SENSOR “A” CIRCUIT RANGE/PERFORMANCE, Diagnostic Trouble Code (DTC) Detecting Criteria.>
P0462	Fuel Level Sensor “A” Circuit Low	<Ref. to GD(H6DO)-184, DTC P0462 FUEL LEVEL SENSOR “A” CIRCUIT LOW, Diagnostic Trouble Code (DTC) Detecting Criteria.>
P0463	Fuel Level Sensor “A” Circuit High	<Ref. to GD(H6DO)-186, DTC P0463 FUEL LEVEL SENSOR “A” CIRCUIT HIGH, Diagnostic Trouble Code (DTC) Detecting Criteria.>
P0464	Fuel Level Sensor Circuit Intermittent	<Ref. to GD(H6DO)-188, DTC P0464 FUEL LEVEL SENSOR CIRCUIT INTERMITTENT, Diagnostic Trouble Code (DTC) Detecting Criteria.>
P0500	Vehicle Speed Sensor “A”	<Ref. to GD(H6DO)-191, DTC P0500 VEHICLE SPEED SENSOR “A”, Diagnostic Trouble Code (DTC) Detecting Criteria.>
P0506	Idle Air Control System RPM Lower Than Expected	<Ref. to GD(H6DO)-192, DTC P0506 IDLE AIR CONTROL SYSTEM RPM LOWER THAN EXPECTED, Diagnostic Trouble Code (DTC) Detecting Criteria.>
P0507	Idle Air Control System RPM Higher Than Expected	<Ref. to GD(H6DO)-193, DTC P0507 IDLE AIR CONTROL SYSTEM RPM HIGHER THAN EXPECTED, Diagnostic Trouble Code (DTC) Detecting Criteria.>
P050A	Cold Start Idle Air Control System Performance	<Ref. to GD(H6DO)-194, DTC P050A COLD START IDLE AIR CONTROL SYSTEM PERFORMANCE, Diagnostic Trouble Code (DTC) Detecting Criteria.>
P050B	Cold Start Ignition Timing Performance	<Ref. to GD(H6DO)-198, DTC P050B COLD START IGNITION TIMING PERFORMANCE, Diagnostic Trouble Code (DTC) Detecting Criteria.>
P0512	Starter Request Circuit	<Ref. to GD(H6DO)-199, DTC P0512 STARTER REQUEST CIRCUIT, Diagnostic Trouble Code (DTC) Detecting Criteria.>
P0513	Incorrect Immobilizer Key	<Ref. to GD(H6DO)-200, DTC P0513 INCORRECT IMMOBILIZER KEY, Diagnostic Trouble Code (DTC) Detecting Criteria.>
P0604	Internal Control Module Random Access Memory (RAM) Error	<Ref. to GD(H6DO)-201, DTC P0604 INTERNAL CONTROL MODULE RANDOM ACCESS MEMORY (RAM) ERROR, Diagnostic Trouble Code (DTC) Detecting Criteria.>
P0605	Internal Control Module Read Only Memory (ROM) Error	<Ref. to GD(H6DO)-202, DTC P0605 INTERNAL CONTROL MODULE READ ONLY MEMORY (ROM) ERROR, Diagnostic Trouble Code (DTC) Detecting Criteria.>
P0607	Throttle Control System Circuit Range/Performance	<Ref. to GD(H6DO)-203, DTC P0607 THROTTLE CONTROL SYSTEM CIRCUIT RANGE/PERFORMANCE, Diagnostic Trouble Code (DTC) Detecting Criteria.>

GETtheMANUALS.org

List of Diagnostic Trouble Code (DTC)

DTC	Item	Index
P0638	Throttle Actuator Control Range/Performance (Bank 1)	<Ref. to GD(H6DO)-205, DTC P0638 THROTTLE ACTUATOR CONTROL RANGE/PERFORMANCE (BANK 1), Diagnostic Trouble Code (DTC) Detecting Criteria.>
P0700	Transmission Control System (MIL Request)	<Ref. to GD(H6DO)-207, DTC P0700 TRANSMISSION CONTROL SYSTEM (MIL REQUEST), Diagnostic Trouble Code (DTC) Detecting Criteria.>
P1152	O2 Sensor Circuit Range/Performance (Low) (Bank1 Sensor1)	<Ref. to GD(H6DO)-208, DTC P1152 O2 SENSOR CIRCUIT RANGE/PERFORMANCE (LOW) (BANK1 SENSOR1), Diagnostic Trouble Code (DTC) Detecting Criteria.>
P1153	O2 Sensor Circuit Range/Performance (High) (Bank1 Sensor1)	<Ref. to GD(H6DO)-210, DTC P1153 O2 SENSOR CIRCUIT RANGE/PERFORMANCE (HIGH) (BANK1 SENSOR1), Diagnostic Trouble Code (DTC) Detecting Criteria.>
P1154	O2 Sensor Circuit Range/Performance (Low) (Bank 2 Sensor 1)	<Ref. to GD(H6DO)-212, DTC P1154 O2 SENSOR CIRCUIT RANGE/PERFORMANCE (LOW) (BANK 2 SENSOR 1), Diagnostic Trouble Code (DTC) Detecting Criteria.>
P1155	O2 Sensor Circuit Range/Performance (High) (Bank 2 Sensor 1)	<Ref. to GD(H6DO)-212, DTC P1155 O2 SENSOR CIRCUIT RANGE/PERFORMANCE (HIGH) (BANK 2 SENSOR 1), Diagnostic Trouble Code (DTC) Detecting Criteria.>
P1160	Return Spring Failure	<Ref. to GD(H6DO)-213, DTC P1160 RETURN SPRING FAILURE, Diagnostic Trouble Code (DTC) Detecting Criteria.>
P1443	Vent Control Solenoid Valve Function Problem	<Ref. to GD(H6DO)-215, DTC P1443 VENT CONTROL SOLENOID VALVE FUNCTION PROBLEM, Diagnostic Trouble Code (DTC) Detecting Criteria.>
P1492	EGR Solenoid Valve Signal #1 Circuit Malfunction (Low Input)	<Ref. to GD(H6DO)-217, DTC P1492 EGR SOLENOID VALVE SIGNAL #1 CIRCUIT MALFUNCTION (LOW INPUT), Diagnostic Trouble Code (DTC) Detecting Criteria.>
P1493	EGR Solenoid Valve Signal #1 Circuit Malfunction (High Input)	<Ref. to GD(H6DO)-219, DTC P1493 EGR SOLENOID VALVE SIGNAL #1 CIRCUIT MALFUNCTION (HIGH INPUT), Diagnostic Trouble Code (DTC) Detecting Criteria.>
P1494	EGR Solenoid Valve Signal #2 Circuit Malfunction (Low Input)	<Ref. to GD(H6DO)-221, DTC P1494 EGR SOLENOID VALVE SIGNAL #2 CIRCUIT MALFUNCTION (LOW INPUT), Diagnostic Trouble Code (DTC) Detecting Criteria.>
P1495	EGR Solenoid Valve Signal #2 Circuit Malfunction (High Input)	<Ref. to GD(H6DO)-221, DTC P1495 EGR SOLENOID VALVE SIGNAL #2 CIRCUIT MALFUNCTION (HIGH INPUT), Diagnostic Trouble Code (DTC) Detecting Criteria.>
P1496	EGR Solenoid Valve Signal #3 Circuit Malfunction (Low Input)	<Ref. to GD(H6DO)-221, DTC P1496 EGR SOLENOID VALVE SIGNAL #3 CIRCUIT MALFUNCTION (LOW INPUT), Diagnostic Trouble Code (DTC) Detecting Criteria.>
P1497	EGR Solenoid Valve Signal #3 Circuit Malfunction (High Input)	<Ref. to GD(H6DO)-221, DTC P1497 EGR SOLENOID VALVE SIGNAL #3 CIRCUIT MALFUNCTION (HIGH INPUT), Diagnostic Trouble Code (DTC) Detecting Criteria.>
P1498	EGR Solenoid Valve Signal #4 Circuit Malfunction (Low Input)	<Ref. to GD(H6DO)-221, DTC P1498 EGR SOLENOID VALVE SIGNAL #4 CIRCUIT MALFUNCTION (LOW INPUT), Diagnostic Trouble Code (DTC) Detecting Criteria.>
P1499	EGR Solenoid Valve Signal #4 Circuit Malfunction (High Input)	<Ref. to GD(H6DO)-221, DTC P1499 EGR SOLENOID VALVE SIGNAL #4 CIRCUIT MALFUNCTION (HIGH INPUT), Diagnostic Trouble Code (DTC) Detecting Criteria.>
P1518	Starter Switch Circuit Low Input	<Ref. to GD(H6DO)-222, DTC P1518 STARTER SWITCH CIRCUIT LOW INPUT, Diagnostic Trouble Code (DTC) Detecting Criteria.>
P1560	Back-Up Voltage Circuit Malfunction	<Ref. to GD(H6DO)-223, DTC P1560 BACK-UP VOLTAGE CIRCUIT MALFUNCTION, Diagnostic Trouble Code (DTC) Detecting Criteria.>
P1570	Antenna	<Ref. to GD(H6DO)-224, DTC P1570 ANTENNA, Diagnostic Trouble Code (DTC) Detecting Criteria.>
P1571	Reference Code Incompatibility	<Ref. to GD(H6DO)-224, DTC P1571 REFERENCE CODE INCOMPATIBILITY, Diagnostic Trouble Code (DTC) Detecting Criteria.>
P1572	IMM Circuit Failure (Except Antenna Circuit)	<Ref. to GD(H6DO)-224, DTC P1572 IMM CIRCUIT FAILURE (EXCEPT ANTENNA CIRCUIT), Diagnostic Trouble Code (DTC) Detecting Criteria.>

GETthemANUALS.org

List of Diagnostic Trouble Code (DTC)

DTC	Item	Index
P1574	Key Communication Failure	<Ref. to GD(H6DO)-224, DTC P1574 KEY COMMUNICATION FAILURE, Diagnostic Trouble Code (DTC) Detecting Criteria.>
P1576	EGI Control Module EEPROM	<Ref. to GD(H6DO)-224, DTC P1576 EGI CONTROL MODULE EEPROM, Diagnostic Trouble Code (DTC) Detecting Criteria.>
P1577	IMM Control Module EEPROM	<Ref. to GD(H6DO)-224, DTC P1577 IMM CONTROL MODULE EEPROM, Diagnostic Trouble Code (DTC) Detecting Criteria.>
P1578	Meter Failure	<Ref. to GD(H6DO)-224, DTC P1578 METER FAILURE, Diagnostic Trouble Code (DTC) Detecting Criteria.>
P2088	Intake Camshaft Position Actuator Control Circuit Low (Bank 1)	<Ref. to GD(H6DO)-225, DTC P2088 INTAKE CAMSHAFT POSITION ACTUATOR CONTROL CIRCUIT LOW (BANK 1), Diagnostic Trouble Code (DTC) Detecting Criteria.>
P2089	Intake Camshaft Position Actuator Control Circuit High (Bank 1)	<Ref. to GD(H6DO)-226, DTC P2089 INTAKE CAMSHAFT POSITION ACTUATOR CONTROL CIRCUIT HIGH (BANK 1), Diagnostic Trouble Code (DTC) Detecting Criteria.>
P2090	Exhaust Camshaft Position Actuator Control Circuit Low (Bank 1)	<Ref. to GD(H6DO)-227, DTC P2090 EXHAUST CAMSHAFT POSITION ACTUATOR CONTROL CIRCUIT LOW (BANK 1), Diagnostic Trouble Code (DTC) Detecting Criteria.>
P2091	Exhaust Camshaft Position Actuator Control Circuit High (Bank 1)	<Ref. to GD(H6DO)-228, DTC P2091 EXHAUST CAMSHAFT POSITION ACTUATOR CONTROL CIRCUIT HIGH (BANK 1), Diagnostic Trouble Code (DTC) Detecting Criteria.>
P2092	Intake Camshaft Position Actuator Control Circuit Low (Bank 2)	<Ref. to GD(H6DO)-229, DTC P2092 INTAKE CAMSHAFT POSITION ACTUATOR CONTROL CIRCUIT LOW (BANK 2), Diagnostic Trouble Code (DTC) Detecting Criteria.>
P2093	Intake Camshaft Position Actuator Control Circuit High (Bank 2)	<Ref. to GD(H6DO)-229, DTC P2093 INTAKE CAMSHAFT POSITION ACTUATOR CONTROL CIRCUIT HIGH (BANK 2), Diagnostic Trouble Code (DTC) Detecting Criteria.>
P2094	Exhaust Camshaft Position Actuator Control Circuit Low (Bank 2)	<Ref. to GD(H6DO)-229, DTC P2094 EXHAUST CAMSHAFT POSITION ACTUATOR CONTROL CIRCUIT LOW (BANK 2), Diagnostic Trouble Code (DTC) Detecting Criteria.>
P2095	Exhaust Camshaft Position Actuator Control Circuit High (Bank 2)	<Ref. to GD(H6DO)-229, DTC P2095 EXHAUST CAMSHAFT POSITION ACTUATOR CONTROL CIRCUIT HIGH (BANK 2), Diagnostic Trouble Code (DTC) Detecting Criteria.>
P2096	Post Catalyst Fuel Trim System Too Lean (Bank 1)	<Ref. to GD(H6DO)-230, DTC P2096 POST CATALYST FUEL TRIM SYSTEM TOO LEAN (BANK 1), Diagnostic Trouble Code (DTC) Detecting Criteria.>
P2097	Post Catalyst Fuel Trim System Too Rich (Bank 1)	<Ref. to GD(H6DO)-232, DTC P2097 POST CATALYST FUEL TRIM SYSTEM TOO RICH (BANK 1), Diagnostic Trouble Code (DTC) Detecting Criteria.>
P2098	Post Catalyst Fuel Trim System Too Lean Bank 2	<Ref. to GD(H6DO)-233, DTC P2098 POST CATALYST FUEL TRIM SYSTEM TOO LEAN BANK 2, Diagnostic Trouble Code (DTC) Detecting Criteria.>
P2099	Post Catalyst Fuel Trim System Too Rich Bank 2	<Ref. to GD(H6DO)-233, DTC P2099 POST CATALYST FUEL TRIM SYSTEM TOO RICH BANK 2, Diagnostic Trouble Code (DTC) Detecting Criteria.>
P2101	Throttle Actuator Control Motor Circuit Range/Performance	<Ref. to GD(H6DO)-234, DTC P2101 THROTTLE ACTUATOR CONTROL MOTOR CIRCUIT RANGE/PERFORMANCE, Diagnostic Trouble Code (DTC) Detecting Criteria.>
P2102	Throttle Actuator Control Motor Circuit Low	<Ref. to GD(H6DO)-236, DTC P2102 THROTTLE ACTUATOR CONTROL MOTOR CIRCUIT LOW, Diagnostic Trouble Code (DTC) Detecting Criteria.>
P2103	Throttle Actuator Control Motor Circuit High	<Ref. to GD(H6DO)-238, DTC P2103 THROTTLE ACTUATOR CONTROL MOTOR CIRCUIT HIGH, Diagnostic Trouble Code (DTC) Detecting Criteria.>
P2109	Throttle/Pedal Position Sensor “A” Minimum Stop Performance	<Ref. to GD(H6DO)-240, DTC P2109 THROTTLE/PEDAL POSITION SENSOR “A” MINIMUM STOP PERFORMANCE, Diagnostic Trouble Code (DTC) Detecting Criteria.>

GETtheMANUALS.org

List of Diagnostic Trouble Code (DTC)

DTC	Item	Index
P2122	Throttle/Pedal Position Sensor/ Switch “D” Circuit Low Input	<Ref. to GD(H6DO)-242, DTC P2122 THROTTLE/PEDAL POSITION SENSOR/SWITCH “D” CIRCUIT LOW INPUT, Diagnostic Trouble Code (DTC) Detecting Criteria.>
P2123	Throttle/Pedal Position Sensor/ Switch “D” Circuit High Input	<Ref. to GD(H6DO)-244, DTC P2123 THROTTLE/PEDAL POSITION SENSOR/SWITCH “D” CIRCUIT HIGH INPUT, Diagnostic Trouble Code (DTC) Detecting Criteria.>
P2127	Throttle/Pedal Position Sensor/ Switch “E” Circuit Low Input	<Ref. to GD(H6DO)-246, DTC P2127 THROTTLE/PEDAL POSITION SENSOR/SWITCH “E” CIRCUIT LOW INPUT, Diagnostic Trouble Code (DTC) Detecting Criteria.>
P2128	Throttle/Pedal Position Sensor/ Switch “E” Circuit High Input	<Ref. to GD(H6DO)-248, DTC P2128 THROTTLE/PEDAL POSITION SENSOR/SWITCH “E” CIRCUIT HIGH INPUT, Diagnostic Trouble Code (DTC) Detecting Criteria.>
P2135	Throttle/Pedal Position Sensor/ Switch “A”/“B” Voltage Correlation	<Ref. to GD(H6DO)-250, DTC P2135 THROTTLE/PEDAL POSITION SENSOR/SWITCH “A”/“B” VOLTAGE CORRELATION, Diagnostic Trouble Code (DTC) Detecting Criteria.>
P2138	Throttle/Pedal Position Sensor/ Switch “D”/“E” Voltage Correlation	<Ref. to GD(H6DO)-252, DTC P2138 THROTTLE/PEDAL POSITION SENSOR/SWITCH “D”/“E” VOLTAGE CORRELATION, Diagnostic Trouble Code (DTC) Detecting Criteria.>
P219A	Bank 1 Air-Fuel Ratio Imbalance	<Ref. to GD(H6DO)-254, DTC P219A BANK 1 AIR-FUEL RATIO IMBALANCE, Diagnostic Trouble Code (DTC) Detecting Criteria.>
P219B	Bank 2 Air-Fuel Ratio Imbalance	<Ref. to GD(H6DO)-257, DTC P219B BANK 2 AIR-FUEL RATIO IMBALANCE, Diagnostic Trouble Code (DTC) Detecting Criteria.>
P2227	Barometric Pressure Circuit Range/ Performance	<Ref. to GD(H6DO)-258, DTC P2227 BAROMETRIC PRESSURE CIRCUIT RANGE/PERFORMANCE, Diagnostic Trouble Code (DTC) Detecting Criteria.>
P2228	Barometric Pressure Circuit Low	<Ref. to GD(H6DO)-259, DTC P2228 BAROMETRIC PRESSURE CIRCUIT LOW, Diagnostic Trouble Code (DTC) Detecting Criteria.>
P2229	Barometric Pressure Circuit High	<Ref. to GD(H6DO)-260, DTC P2229 BAROMETRIC PRESSURE CIRCUIT HIGH, Diagnostic Trouble Code (DTC) Detecting Criteria.>
P2610	ECM/PCM Internal Engine Off Timer Performance	<Ref. to GD(H6DO)-261, DTC P2610 ECM/PCM INTERNAL ENGINE OFF TIMER PERFORMANCE, Diagnostic Trouble Code (DTC) Detecting Criteria.>
U0073	CAN Failure, Bus ‘Off’ Detection	<Ref. to GD(H6DO)-269, DTC U0073 CAN FAILURE, BUS ‘OFF’ DETECTION, Diagnostic Trouble Code (DTC) Detecting Criteria.>
U0101	CAN (TCU) Data Not Loaded	<Ref. to GD(H6DO)-270, DTC U0101 CAN (TCU) DATA NOT LOADED, Diagnostic Trouble Code (DTC) Detecting Criteria.>
U0122	CAN (VDC) Data Not Loaded	<Ref. to GD(H6DO)-271, DTC U0122 CAN (VDC) DATA NOT LOADED, Diagnostic Trouble Code (DTC) Detecting Criteria.>
U0140	CAN (BCU) Data Not Loaded	<Ref. to GD(H6DO)-271, DTC U0140 CAN (BCU) DATA NOT LOADED, Diagnostic Trouble Code (DTC) Detecting Criteria.>
U0402	CAN (TCU) Data Abnormal	<Ref. to GD(H6DO)-272, DTC U0402 CAN (TCU) DATA ABNORMAL, Diagnostic Trouble Code (DTC) Detecting Criteria.>
U0416	CAN (VDC) Data Abnormal	<Ref. to GD(H6DO)-273, DTC U0416 CAN (VDC) DATA ABNORMAL, Diagnostic Trouble Code (DTC) Detecting Criteria.>
U0422	CAN (BCU) Data Abnormal	<Ref. to GD(H6DO)-273, DTC U0422 CAN (BCU) DATA ABNORMAL, Diagnostic Trouble Code (DTC) Detecting Criteria.>

GETtheMANUALS.org

2. Diagnostic Trouble Code (DTC) Detecting Criteria

A: DTC P0011 INTAKE CAMSHAFT POSITION - TIMING OVER-ADVANCED OR SYSTEM PERFORMANCE (BANK 1)

1. OUTLINE OF DIAGNOSIS

Detect the AVCS system malfunction.
Judge NG when the amount of AVCS actual timing advance does not approach to the amount of AVCS target timing advance.

2. COMPONENT DESCRIPTION

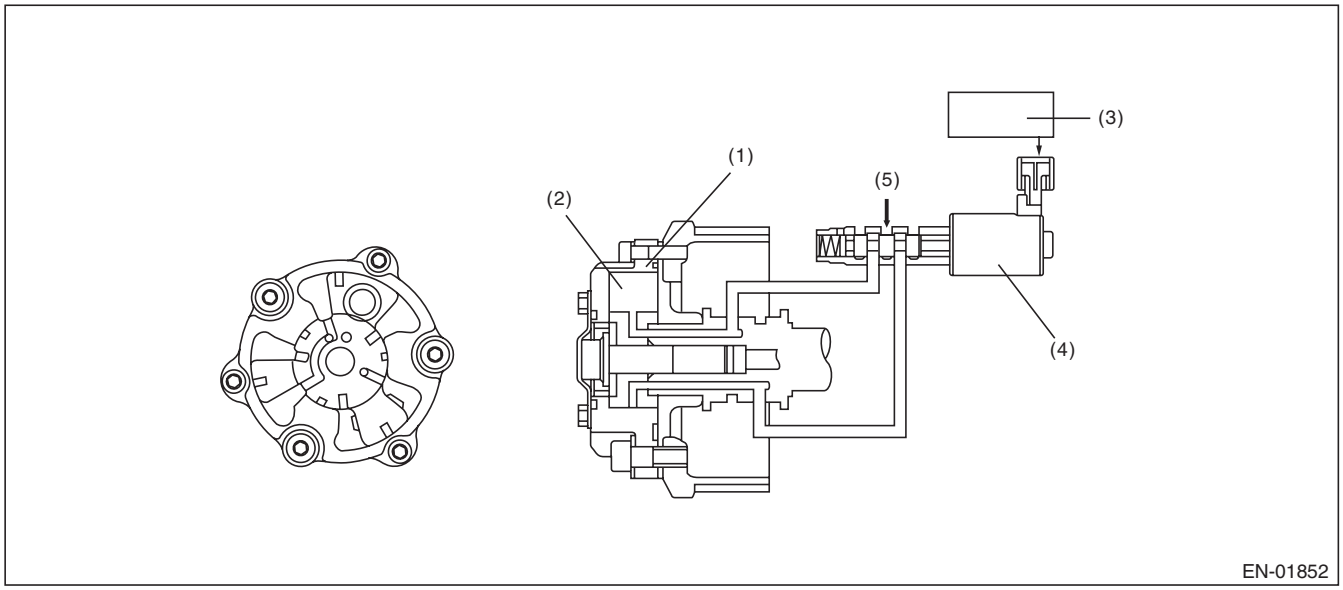

(1) AVCS timing controller
(2) Vane
(3) Engine control module (ECM)
(4) Oil flow control solenoid valve
(5) Oil pressure

3. ENABLE CONDITION

Secondary Parameters	Enable Conditions
Time of establishing all secondary parameter conditions	≥ 2000 ms
Battery voltage	≥ 10.9 V
Engine speed	≥ 1500 rpm
Engine coolant temperature	≥ 50 °C (122 °F)
AVCS control	Operation
Target timing advance change amount (per 64 ms)	< 1.07 °CA

4. GENERAL DRIVING CYCLE

Perform the diagnosis continuously after warming up when the engine speed increases and AVCS operates.

GETtheMANUALS.org

5. DIAGNOSTIC METHOD

1) When the conditions during which the differences of AVCS target timing advance amount and AVCS actual timing advance amount is large continues for certain amount of time.
2) When the differences of target timing advance amount and actual timing advance amount is calculated during AVCS control, and the difference per predetermined time is the specified value or larger.

- **Abnormality Judgment**

Judge as NG when the following conditions are established within the predetermined time.

Judgment Value

Malfunction Criteria	Threshold Value
Σ(Target position – Actual position)	> 15000 °CA (Bank 1) > 15000 °CA (Bank 2)
or	
Σ(Target position – Actual position)	< –4800 °CA (Bank 1) < –4800 °CA (Bank 2)

Time Needed for Diagnosis: 60000 ms
Malfunction Indicator Light Illumination: Illuminates when malfunction occurs in 2 continuous driving cycles.

- **Normality Judgment**

Judge as OK and clear the NG if the following conditions are established within the predetermined time.

Judgment Value

Malfunction Criteria	Threshold Value
Σ(Target position – Actual position)	≤ 15000 °CA (Bank 1) ≤ 15000 °CA (Bank 2) and ≥ –4800 °CA (Bank 1) ≥ –4800 °CA (Bank 2)

Time Needed for Diagnosis: 60000 ms

GETtheMANUALS.org

B: DTC P0014 EXHAUST AVCS SYSTEM 1 (RANGE/PERFORMANCE)

1. OUTLINE OF DIAGNOSIS

Detect the exhaust AVCS system malfunction.
Judge as NG when actual exhaust AVCS advance angle amount does not approach the target exhaust AVCS advance angle amount.

2. COMPONENT DESCRIPTION

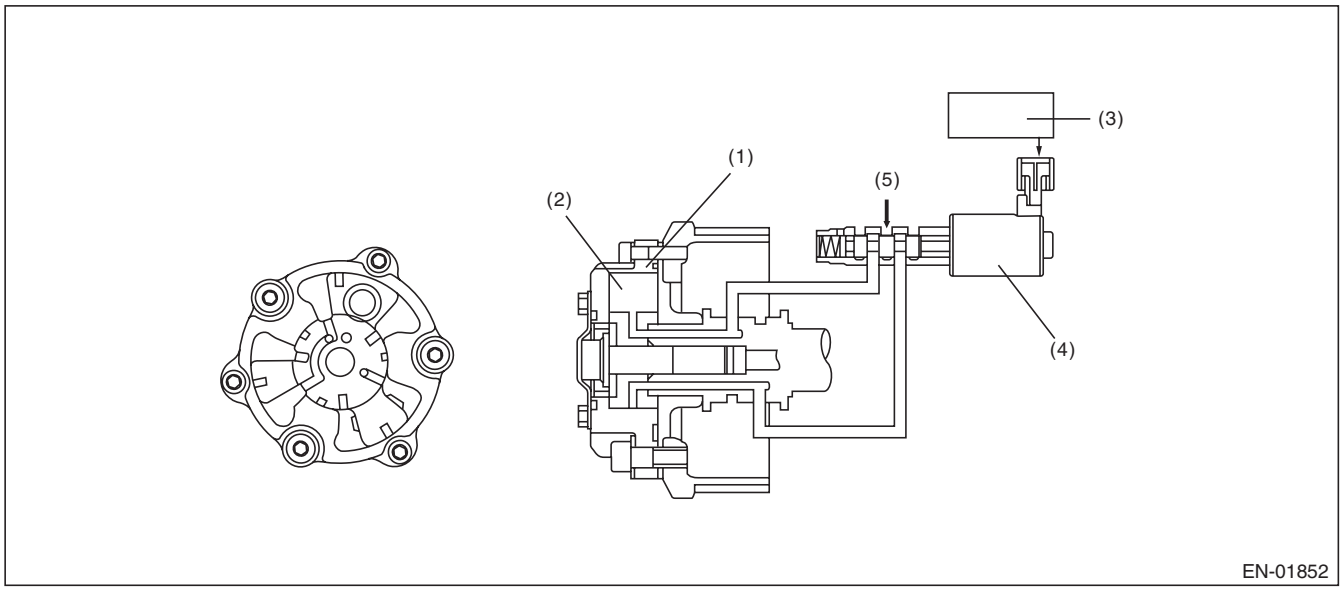

(1) Exhaust AVCS timing controller
(2) Vane
(3) Engine control module (ECM)
(4) Oil flow control solenoid valve
(5) Oil pressure

3. ENABLE CONDITIONS

Secondary Parameters	Enable Conditions
Time of establishing all secondary parameter conditions	≥ 2000 ms
Battery voltage	≥ 10.9 V
Engine speed	≥ 1500 rpm
Engine coolant temperature	≥ 50 °C (122 °F)
Exhaust AVCS control	Operation
Target timing advance change amount (per 64 ms)	< 1.07 °CA

4. GENERAL DRIVING CYCLE

Perform the diagnosis continuously when the exhaust AVCS is operating with high engine speed after warming up.

GETtheMANUALS.org

5. DIAGNOSTIC METHOD

1) When the conditions during which the differences of exhaust AVCS target timing advance amount and exhaust AVCS actual timing advance amount is large continues for certain amount of time.
2) When the differences of target timing advance amount and actual timing advance amount is calculated during exhaust AVCS control, and the difference per predetermined time is the specified value or larger.

- **Abnormality Judgment**

Judge as NG when the following conditions are established within the predetermined time.

Judgment Value

Malfunction Criteria	Threshold Value
Σ(Target position – Actual position) or Σ(Target position – Actual position)	> 8000 °CA (bank 1) > 8000 °CA (bank 2) < –4800 °CA (Bank 1) < –4800 °CA (Bank 2)

Time Needed for Diagnosis:
60000 ms
Malfunction Indicator Light Illumination: Illuminates when malfunction occurs in 2 continuous driving cycles.

- **Normality Judgment**

Judge as OK and clear the NG if the following conditions are established within the predetermined time.

Judgment Value

Malfunction Criteria	Threshold Value
Σ(Target position – Actual position)	≤ 8000 °CA (bank 1) ≤ 8000 °CA (bank 2) and ≥ –4800 °CA (Bank 1) ≥ –4800 °CA (Bank 2)

Time Needed for Diagnosis: 60000 ms

GETtheMANUALS.org

C: DTC P0016 CRANKSHAFT POSITION - CAMSHAFT POSITION CORRELATION (BANK1)

1. OUTLINE OF DIAGNOSIS

Detect the AVCS system malfunction.
Judge as NG when standard timing advance amount is far from learning angle.

2. COMPONENT DESCRIPTION

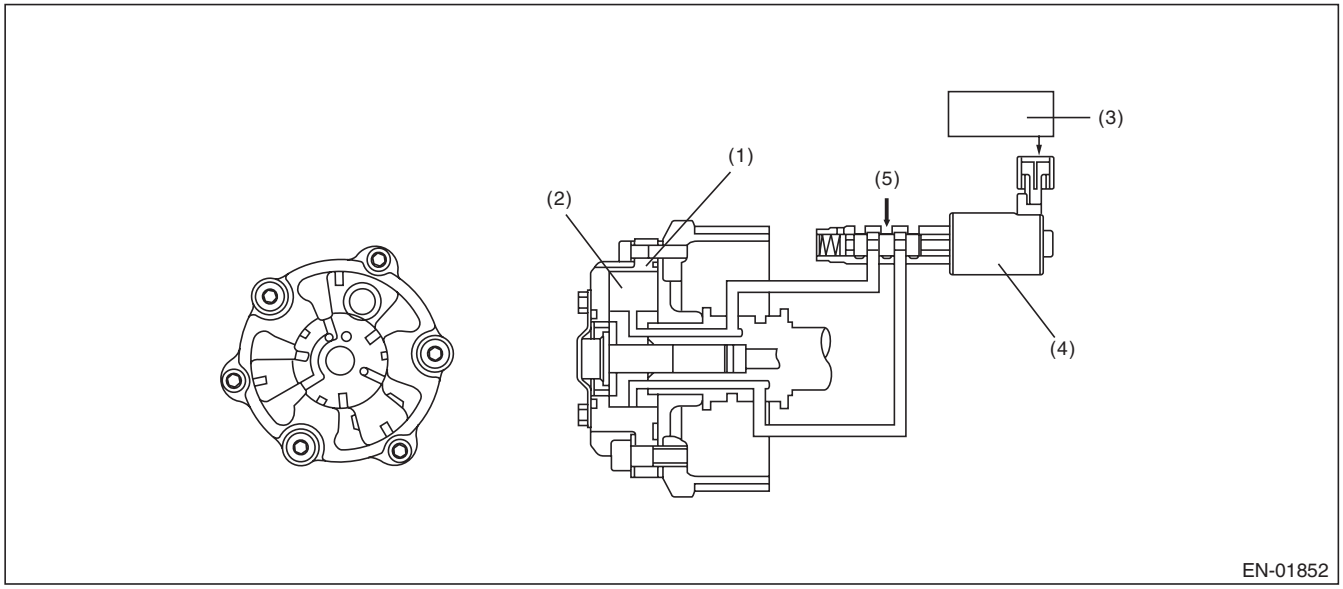

(1) AVCS timing controller
(2) Vane
(3) Engine control module (ECM)
(4) Oil flow control solenoid valve
(5) Oil pressure

3. ENABLE CONDITION

Secondary Parameters	Enable Conditions
Battery voltage	≥ 10.9 V
Engine speed	≥ 525 rpm and < 800 rpm
Engine coolant temperature	≥ 75 °C (167 °F)
AVCS control	Not in operation
Target timing advance	0°CA

4. GENERAL DRIVING CYCLE

Perform the diagnosis continuously after starting engine and while AVCS is not operating.

GETtheMANUALS.org

5. DIAGNOSTIC METHOD

Judge as NG when the absolute value of the difference between cam signal input position and learning value is out of specification.

- **Abnormality Judgment**

If the duration of time while the following conditions are met is longer than the time indicated, judge as NG.

Judgment Value

Malfunction Criteria	Threshold Value
|Crankshaft position when camshaft position sensor signal is input – Learning value|	> 12 °CA

Time Needed for Diagnosis: 20000 ms
Malfunction Indicator Light Illumination: Illuminates when malfunction occurs in 2 continuous driving cycles.

NOTE:
Initial standard learning value is the value of crank angle initially input at the production plant. And then it will be updated every time normal judgment has been completed. Learning value will not be updated if NG judgment occurs because timing belt or chain derails suddenly in process or because wrong assembly occurs during servicing.

- **Normality Judgment**

Judge as OK and clear the NG if the continuous time while the following conditions are established is more than the predetermined time.

Judgment Value

Malfunction Criteria	Threshold Value
|Crankshaft position when camshaft position sensor signal is input – Learning value|	≤ 12 °CA

Time Needed for Diagnosis: Less than 1 second

GETtheMANUALS.org

D: DTC P0017 CRANK AND CAM TIMING B SYSTEM FAILURE (BANK 1)

1. OUTLINE OF DIAGNOSIS

Detect the exhaust AVCS system malfunction.
Judge as NG when standard timing advance amount is far from learning angle.

2. COMPONENT DESCRIPTION

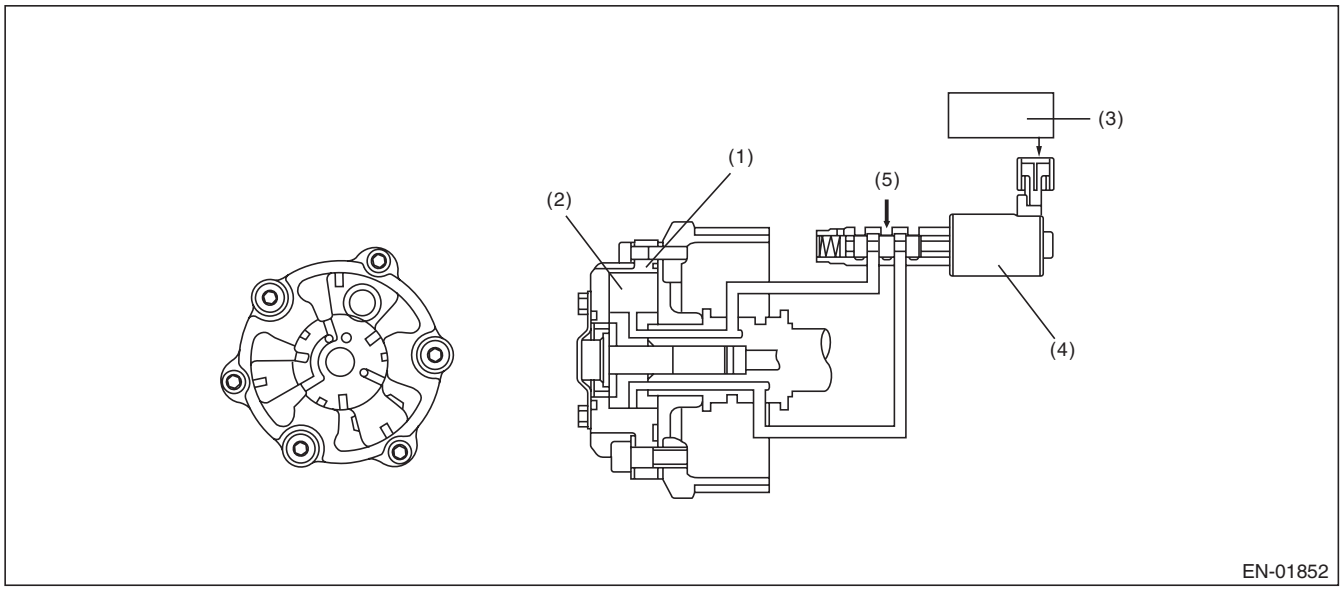

(1) Exhaust AVCS timing controller
(2) Vane
(3) Engine control module (ECM)
(4) Oil flow control solenoid valve
(5) Oil pressure

3. ENABLE CONDITIONS

Secondary Parameters	Enable Conditions
Battery voltage	≥ 10.9 V
Engine speed	≥ 525 rpm and < 800 rpm
Engine coolant temperature	≥ 75 °C (167 °F)
Exhaust AVCS control	Not in operation
Target timing advance	0°CA

4. GENERAL DRIVING CYCLE

Perform the diagnosis continuously while the exhaust AVCS is not operating after warming up.

GETtheMANUALS.org

5. DIAGNOSTIC METHOD

Judge as NG when the absolute value of the difference between cam signal input position and learning value is out of specification.

- **Abnormality Judgment**

If the duration of time while the following conditions are met is longer than the time indicated, judge as NG.

Judgment Value

Malfunction Criteria	Threshold Value
|Crankshaft position when camshaft position sensor signal is input – Learning value|	> 12 °CA

Time Needed for Diagnosis: 20000 ms
Malfunction Indicator Light Illumination: Illuminates when malfunction occurs in 2 continuous driving cycles.

NOTE:
Initial standard learning value is the value of crank angle initially input at the production plant. And then it will be updated every time normal judgment has been completed. Learning value will not be updated if NG judgment occurs because timing belt or chain derails suddenly in process or because wrong assembly occurs during servicing.

- **Normality Judgment**

Judge as OK and clear the NG if the continuous time while the following conditions are established is more than the predetermined time.

Judgment Value

Malfunction Criteria	Threshold Value
|Crankshaft position when camshaft position sensor signal is input – Learning value|	≤ 12 °CA

Time Needed for Diagnosis: Less than 1 second

GETtheMANUALS.org

E: DTC P0018 CRANKSHAFT POSITION - CAMSHAFT POSITION CORRELATION (BANK2)

1. OUTLINE OF DIAGNOSIS

NOTE:
For the detection standard, refer to DTC P0016. <Ref. to GD(H6DO)-15, DTC P0016 CRANKSHAFT POSITION - CAMSHAFT POSITION CORRELATION (BANK1), Diagnostic Trouble Code (DTC) Detecting Criteria.>

F: DTC P0019 CRANK AND CAM TIMING B SYSTEM FAILURE (BANK 2)

1. OUTLINE OF DIAGNOSIS

NOTE:
For the detection standard, refer to DTC P0017. <Ref. to GD(H6DO)-17, DTC P0017 CRANK AND CAM TIMING B SYSTEM FAILURE (BANK 1), Diagnostic Trouble Code (DTC) Detecting Criteria.>

G: DTC P0021 INTAKE CAMSHAFT POSITION - TIMING OVER-ADVANCED OR SYSTEM PERFORMANCE (BANK 2)

1. OUTLINE OF DIAGNOSIS

NOTE:
For the detection standard, refer to DTC P0011. <Ref. to GD(H6DO)-11, DTC P0011 INTAKE CAMSHAFT POSITION - TIMING OVER-ADVANCED OR SYSTEM PERFORMANCE (BANK 1), Diagnostic Trouble Code (DTC) Detecting Criteria.>

H: DTC P0024 EXHAUST AVCS SYSTEM 2 (RANGE/PERFORMANCE)

1. OUTLINE OF DIAGNOSIS

NOTE:
For the detection standard, refer to DTC P0014. <Ref. to GD(H6DO)-13, DTC P0014 EXHAUST AVCS SYSTEM 1 (RANGE/PERFORMANCE), Diagnostic Trouble Code (DTC) Detecting Criteria.>

GETtheMANUALS.org

I: DTC P0030 HO2S HEATER CONTROL CIRCUIT (BANK 1 SENSOR 1)

1. OUTLINE OF DIAGNOSIS

Detect functional errors of the front oxygen (A/F) sensor heater.
Judge as NG when it is determined that the front oxygen (A/F) sensor impedance is large when looking at engine status such as deceleration fuel cut.

2. COMPONENT DESCRIPTION

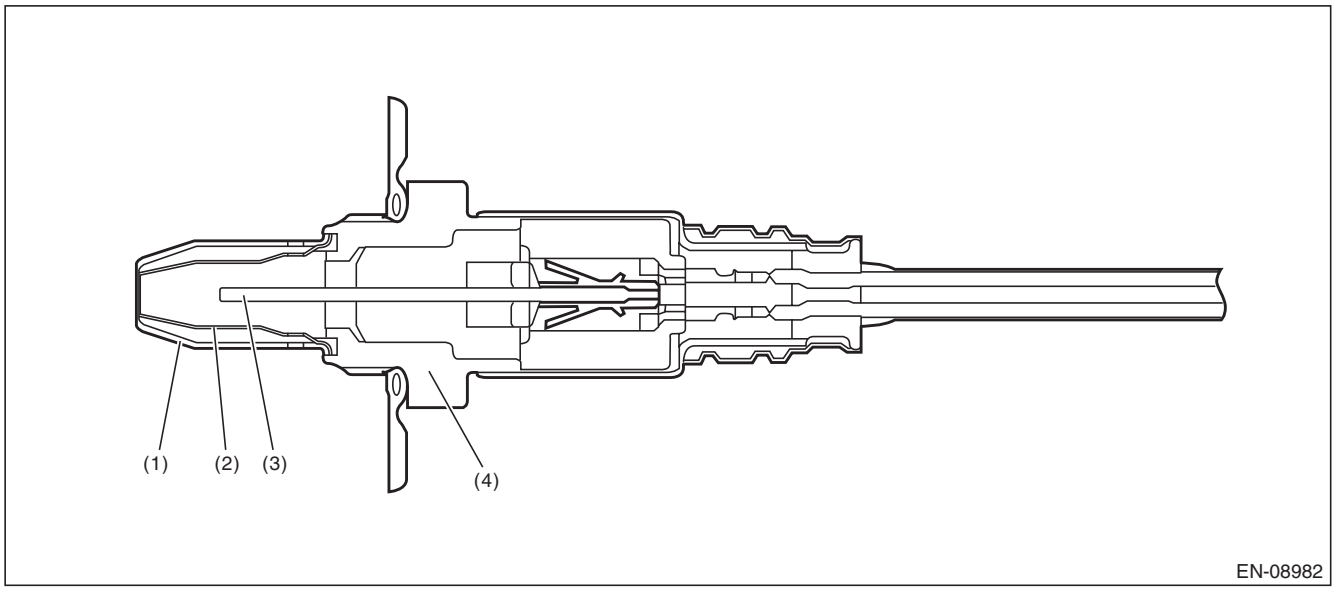

(1) Element cover (outer)
(2) Element cover (inner)
(3) Sensor element
(4) Sensor housing

3. ENABLE CONDITION

Secondary Parameters	Enable Conditions
Condition established time	≥ 30000 ms
Battery voltage	≥ 10.9 V
Heater current	Permitted
A/F sensor heater final control	Main energization status
After fuel cut	≥ 20000 ms

4. GENERAL DRIVING CYCLE

Perform the diagnosis continuously after 30000 ms or more have passed since the engine started.

GETtheMANUALS.org

5. DIAGNOSTIC METHOD

- **Abnormality Judgment**

If the duration of time while the following conditions are met is longer than the time indicated, judge as NG.

Judgment Value

Malfunction Criteria	Threshold Value
Front oxygen (A/F) sensor impedance	> 50 Ω

Time Needed for Diagnosis: 10000 ms
Malfunction Indicator Light Illumination: Illuminates when malfunction occurs in 2 continuous driving cycles.

- **Normality Judgment**

Judge as OK and clear the NG if the continuous time while the following conditions are established is more than the predetermined time.

Judgment Value

Malfunction Criteria	Threshold Value
Front oxygen (A/F) sensor impedance	≤ 50 Ω

Time Needed for Diagnosis: 10000 ms

GETtheMANUALS.org

J: DTC P0031 HO2S HEATER CONTROL CIRCUIT LOW (BANK 1 SENSOR 1)

1. OUTLINE OF DIAGNOSIS

Detect front oxygen (A/F) sensor heater open or short circuit.
The front oxygen (A/F) sensor heater performs duty control, and the output terminal voltage at ON is 0 V, and the output terminal voltage at OFF is the battery voltage.
Judge as NG when the terminal voltage remains Low.

2. COMPONENT DESCRIPTION

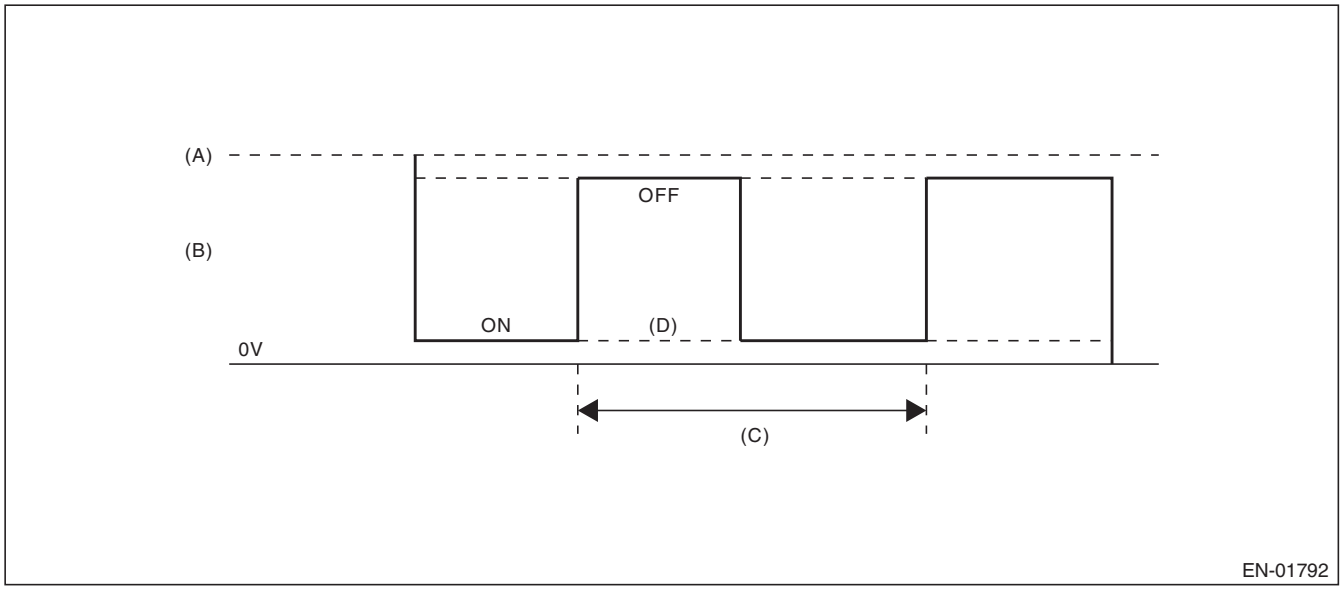

(A) Battery voltage
(B) Front oxygen (A/F) sensor heater output voltage
(C) 128 ms
(D) Low error

3. ENABLE CONDITION

Secondary Parameters	Enable Conditions
Battery voltage	≥ 10.9 V

4. GENERAL DRIVING CYCLE

Always perform the diagnosis continuously.

GETtheMANUALS.org

5. DIAGNOSTIC METHOD

- **Abnormality Judgment**

If the duration of time while the following conditions are met is longer than the time indicated, judge as NG.

Judgment Value

Malfunction Criteria	Threshold Value
Output voltage level	Low
Front oxygen (A/F) sensor heater control duty	< 87.5 %

Time Needed for Diagnosis: 4 ms × 250 time(s)
Malfunction Indicator Light Illumination: Illuminates as soon as a malfunction occurs.

- **Normality Judgment**

Judge as OK and clear the NG if the continuous time while the following conditions are established is more than the predetermined time.

Judgment Value

Malfunction Criteria	Threshold Value
Output voltage level	High

Time Needed for Diagnosis: Less than 1 second

GETtheMANUALS.org

K: DTC P0032 HO2S HEATER CONTROL CIRCUIT HIGH (BANK 1 SENSOR 1)

1. OUTLINE OF DIAGNOSIS

Detect front oxygen (A/F) sensor heater open or short circuit.
The front oxygen (A/F) sensor heater performs duty control, and the output terminal voltage at ON is 0 V, and the output terminal voltage at OFF is the battery voltage.
Judge as NG when the terminal voltage remains High.

2. COMPONENT DESCRIPTION

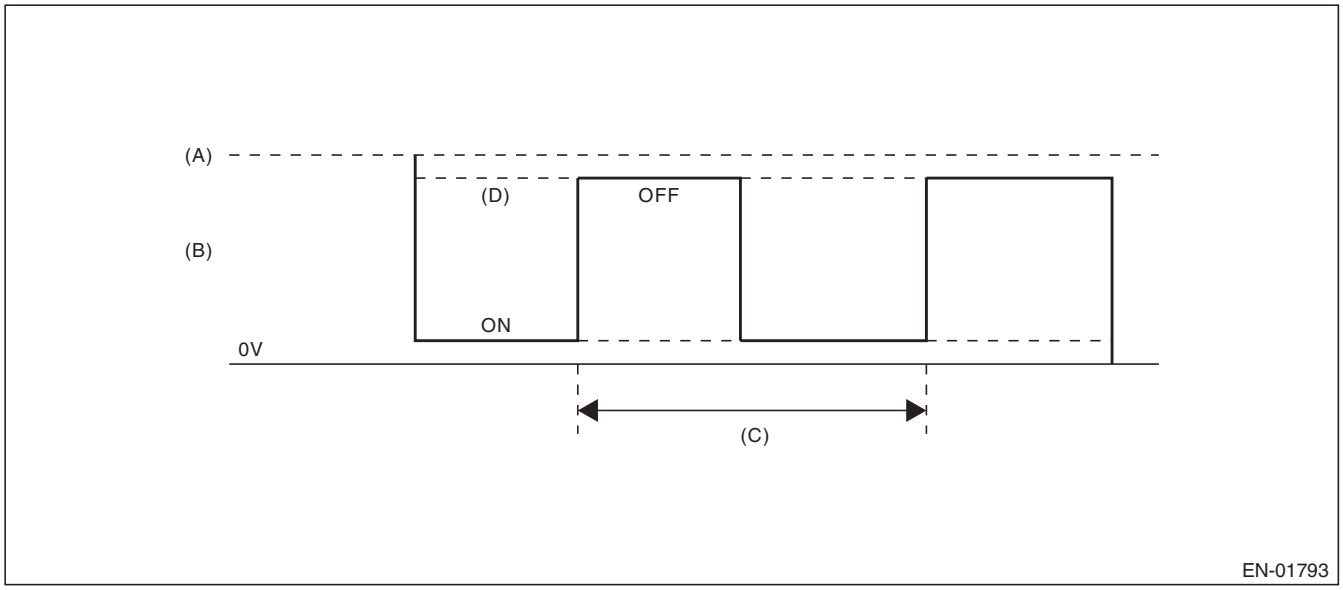

(A) Battery voltage
(B) Front oxygen (A/F) sensor heater output voltage
(C) 128 ms
(D) High error

3. ENABLE CONDITION

Secondary Parameters	Enable Conditions
Battery voltage	≥ 10.9 V

4. GENERAL DRIVING CYCLE

Always perform the diagnosis continuously.

GETtheMANUALS.org

5. DIAGNOSTIC METHOD

- **Abnormality Judgment**

If the duration of time while the following conditions are met is longer than the time indicated, judge as NG.

Judgment Value

Malfunction Criteria	Threshold Value
Output voltage level	High
Front oxygen (A/F) sensor heater control duty	≥ 12.5 %

Time Needed for Diagnosis: 4 ms × 250 time(s)
Malfunction Indicator Light Illumination: Illuminates as soon as a malfunction occurs.

- **Normality Judgment**

Judge as OK and clear the NG if the continuous time while the following conditions are established is more than the predetermined time.

Judgment Value

Malfunction Criteria	Threshold Value
Output voltage level	Low

Time Needed for Diagnosis: Less than 1 second

GETtheMANUALS.org

L: DTC P0037 HO2S HEATER CONTROL CIRCUIT LOW (BANK 1 SENSOR 2)

1. OUTLINE OF DIAGNOSIS

Detect the rear oxygen sensor heater open or short circuit.
The rear oxygen sensor heater performs duty control, and the output terminal voltage at ON is 0 V, and the output terminal voltage at OFF is the battery voltage.
Judge as NG when the terminal voltage remains Low.

2. COMPONENT DESCRIPTION

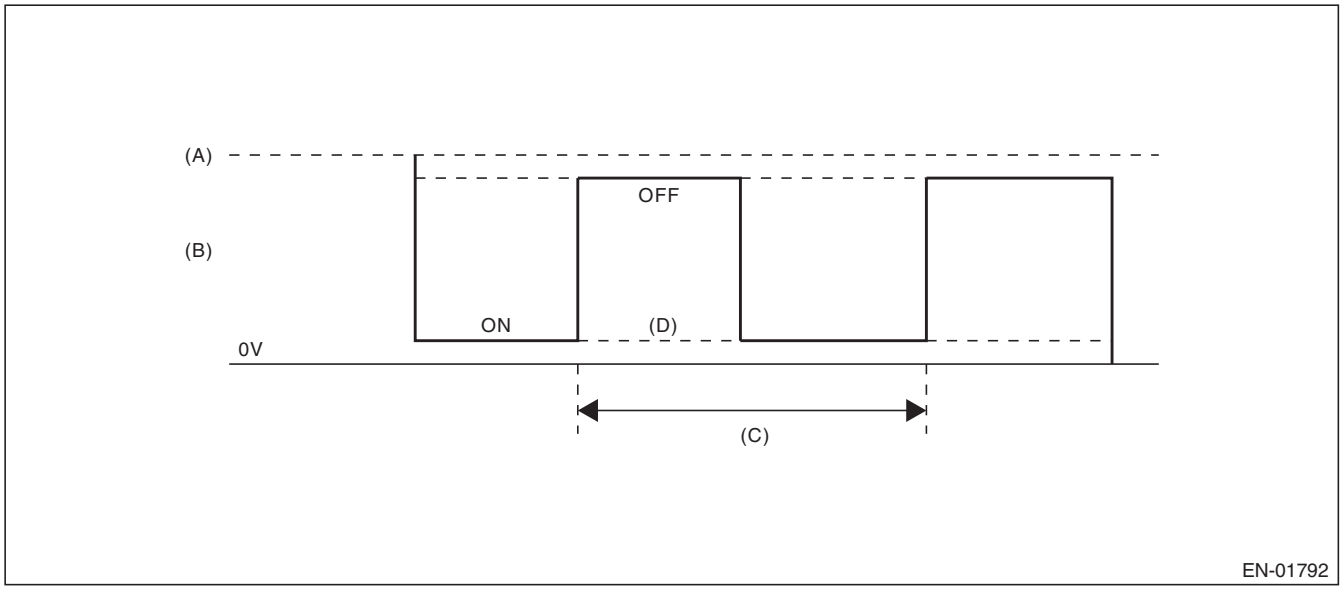

(A) Battery voltage
(B) Output voltage of the rear oxygen sensor heater
(C) 256 ms (cycle)
(D) Low error

3. ENABLE CONDITION

Secondary Parameters	Enable Conditions
Battery voltage	≥ 10.9 V
Elapsed time after starting the engine	≥ 1 second
Engine speed	< 4500 rpm

4. GENERAL DRIVING CYCLE

After starting the engine, perform the diagnosis continuously when engine is low speed.

GETtheMANUALS.org

5. DIAGNOSTIC METHOD

- **Abnormality Judgment**

If the duration of time while the following conditions are met is longer than the time indicated, judge as NG.

Judgment Value

Malfunction Criteria	Threshold Value
Output voltage level	Low
Rear oxygen sensor heater control duty	< 75 %

Time Needed for Diagnosis: 8 ms × 1250 time(s)
Malfunction Indicator Light Illumination: Illuminates when malfunction occurs in 2 continuous driving cycles.

- **Normality Judgment**

Judge as OK and clear the NG if the continuous time while the following conditions are established is more than the predetermined time.

Judgment Value

Malfunction Criteria	Threshold Value
Output voltage level	High

Time Needed for Diagnosis: Less than 1 second

GETtheMANUALS.org

M: DTC P0038 HO2S HEATER CONTROL CIRCUIT HIGH (BANK 1 SENSOR 2)

1. OUTLINE OF DIAGNOSIS

Detect the rear oxygen sensor heater open or short circuit.
The rear oxygen sensor heater performs duty control, and the output terminal voltage at ON is 0 V, and the output terminal voltage at OFF is the battery voltage.
Judge as NG when the terminal voltage remains High.

2. COMPONENT DESCRIPTION

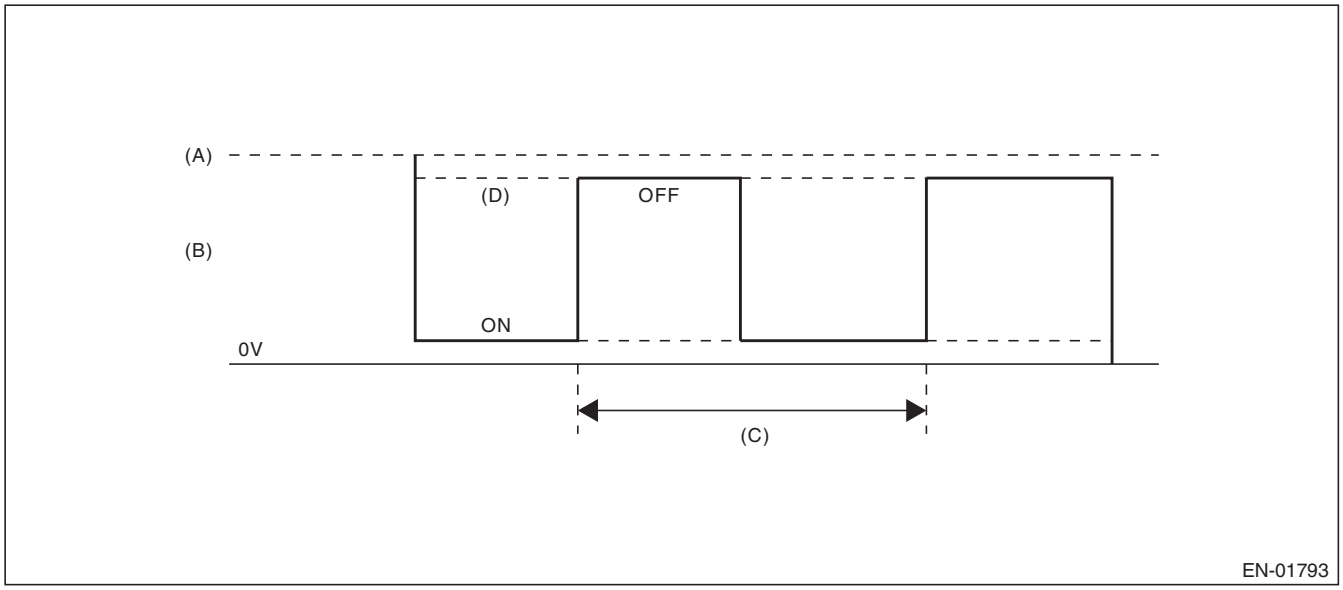

(A) Battery voltage
(B) Output voltage of the rear oxygen sensor heater
(C) 256 ms (cycle)
(D) High error

3. ENABLE CONDITION

Secondary Parameters	Enable Conditions
Battery voltage	≥ 10.9 V
Elapsed time after starting the engine	≥ 1 second
Engine speed	< 4500 rpm

4. GENERAL DRIVING CYCLE

After starting the engine, perform the diagnosis continuously when engine is low speed.

GETtheMANUALS.org

5. DIAGNOSTIC METHOD

- **Abnormality Judgment**

If the duration of time while the following conditions are met is longer than the time indicated, judge as NG.

Judgment Value

Malfunction Criteria	Threshold Value
Output voltage level	High
Rear oxygen sensor heater control duty	≥ 15 %

Time Needed for Diagnosis: 8 ms × 1250 time(s)
Malfunction Indicator Light Illumination: Illuminates when malfunction occurs in 2 continuous driving cycles.

- **Normality Judgment**

Judge as OK and clear the NG if the continuous time while the following conditions are established is more than the predetermined time.

Judgment Value

Malfunction Criteria	Threshold Value
Output voltage level	Low

Time Needed for Diagnosis: Less than 1 second

GETtheMANUALS.org

N: DTC P0050 HO2S HEATER CONTROL CIRCUIT (BANK 2 SENSOR 1)

1. OUTLINE OF DIAGNOSIS

NOTE:
For the detection standard, refer to DTC P0030. <Ref. to GD(H6DO)-20, DTC P0030 HO2S HEATER CONTROL CIRCUIT (BANK 1 SENSOR 1), Diagnostic Trouble Code (DTC) Detecting Criteria.>

O: DTC P0051 HO2S HEATER CONTROL CIRCUIT LOW (BANK 2 SENSOR 1)

1. OUTLINE OF DIAGNOSIS

NOTE:
For the detection standard, refer to DTC P0031. <Ref. to GD(H6DO)-22, DTC P0031 HO2S HEATER CONTROL CIRCUIT LOW (BANK 1 SENSOR 1), Diagnostic Trouble Code (DTC) Detecting Criteria.>

P: DTC P0052 HO2S HEATER CONTROL CIRCUIT HIGH (BANK 2 SENSOR 1)

1. OUTLINE OF DIAGNOSIS

NOTE:
For the detection standard, refer to DTC P0032. <Ref. to GD(H6DO)-24, DTC P0032 HO2S HEATER CONTROL CIRCUIT HIGH (BANK 1 SENSOR 1), Diagnostic Trouble Code (DTC) Detecting Criteria.>

Q: DTC P0057 HO2S HEATER CONTROL CIRCUIT LOW (BANK 2 SENSOR 2)

1. OUTLINE OF DIAGNOSIS

NOTE:
For the detection standard, refer to DTC P0037. <Ref. to GD(H6DO)-26, DTC P0037 HO2S HEATER CONTROL CIRCUIT LOW (BANK 1 SENSOR 2), Diagnostic Trouble Code (DTC) Detecting Criteria.>

R: DTC P0058 HO2S HEATER CONTROL CIRCUIT HIGH (BANK 2 SENSOR 2)

1. OUTLINE OF DIAGNOSIS

NOTE:
For the detection standard, refer to DTC P0038. <Ref. to GD(H6DO)-28, DTC P0038 HO2S HEATER CONTROL CIRCUIT HIGH (BANK 1 SENSOR 2), Diagnostic Trouble Code (DTC) Detecting Criteria.>

GETtheMANUALS.org

S: DTC P0068 MAP/MAF - THROTTLE POSITION CORRELATION

1. OUTLINE OF DIAGNOSIS

Detect problems in the intake manifold pressure sensor output properties.
Judge as NG when the intake air pressure AD value is Low whereas it seemed to be High from the viewpoint of engine condition, or when it is High whereas it seemed to be Low from the engine condition.

2. COMPONENT DESCRIPTION

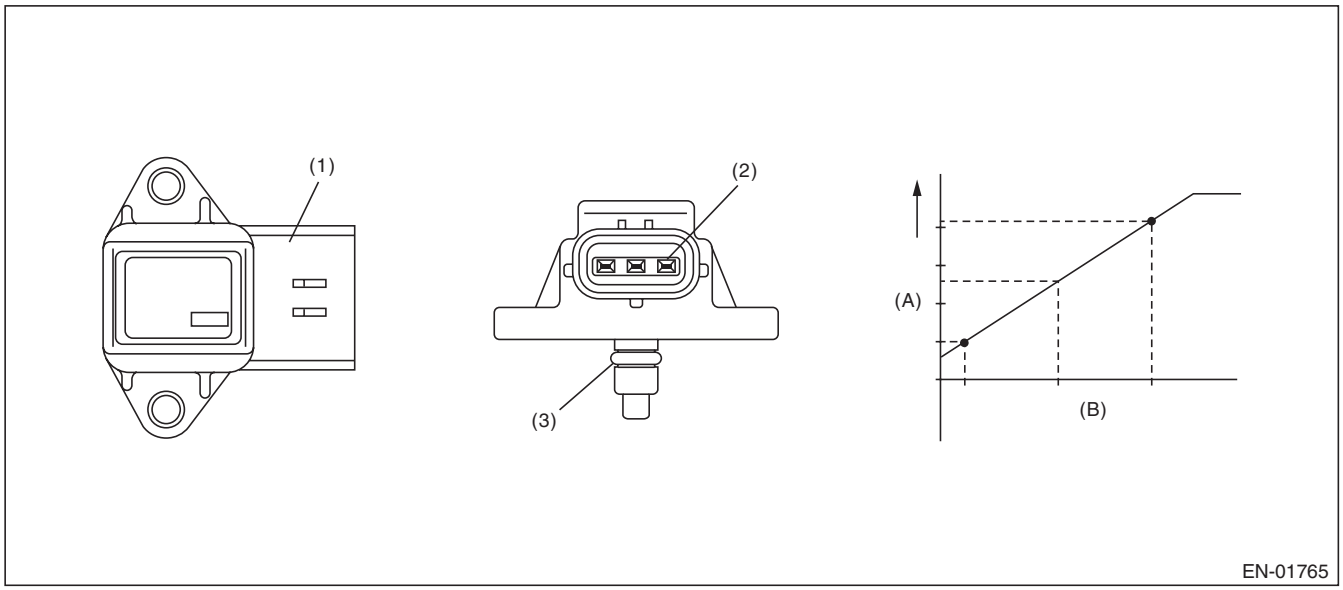

(A) Output voltage
(B) Absolute pressure

(1) Connector
(2) Terminals
(3) O-ring

3. ENABLE CONDITION

Secondary Parameters	Enable Conditions
Engine coolant temperature	≥ 75 °C (167 °F)

4. GENERAL DRIVING CYCLE

Perform the diagnosis continuously after idling.

GETtheMANUALS.org

5. DIAGNOSTIC METHOD

- **Abnormality Judgment**

Judge as NG when Low side or High side becomes NG.
If the duration of time while the following conditions are met is longer than the time indicated, judge as NG.

Judgment Value

Malfunction Criteria	Threshold Value
Low	
Engine speed	< 2700 rpm
Throttle position	≥ 15 °
Output voltage	< 1.8 V
Engine load	> 1 g/rev (0.04 oz/rev)
High	
Engine speed	525 rpm — 850 rpm
Throttle position	< 4.3 °
Output voltage	≥ 2.78 V
Engine load	< 0.6 g/rev (0.02 oz/rev)

Time Needed for Diagnosis:
Low side: 3000 ms
High side: 3000 ms
Malfunction Indicator Light Illumination: Illuminates when malfunction occurs in 2 continuous driving cycles.

- **Normality Judgment**

Judge as OK and clear the NG when both Low side and High side become OK.
If the duration of time while the following conditions are met is longer than the time indicated, judge as OK.

Judgment Value

Malfunction Criteria	Threshold Value
Low	
Engine speed	< 2700 rpm
Throttle position	≥ 15 °
Output voltage	≥ 1.8 V
Engine load	> 1 g/rev (0.04 oz/rev)
High	
Engine speed	525 rpm — 850 rpm
Throttle position	< 4.3 °
Output voltage	< 2.78 V
Engine load	< 0.6 g/rev (0.02 oz/rev)

Time Needed for Diagnosis:
Low side: Less than 1 second
High side: Less than 1 second

GETtheMANUALS.org

T: DTC P0101 MASS OR VOLUME AIR FLOW CIRCUIT RANGE/PERFORMANCE

1. OUTLINE OF DIAGNOSIS

Detect the malfunction of air flow sensor output properties.
Judge as a low side NG when the air flow voltage indicates a small value regardless of running in a state where the air flow voltage increases. Judge as a high side NG when the air flow voltage indicates a large value regardless of running in a state where the air flow voltage decreases. Judge air flow sensor property NG when the Low side or High side becomes NG.

2. COMPONENT DESCRIPTION

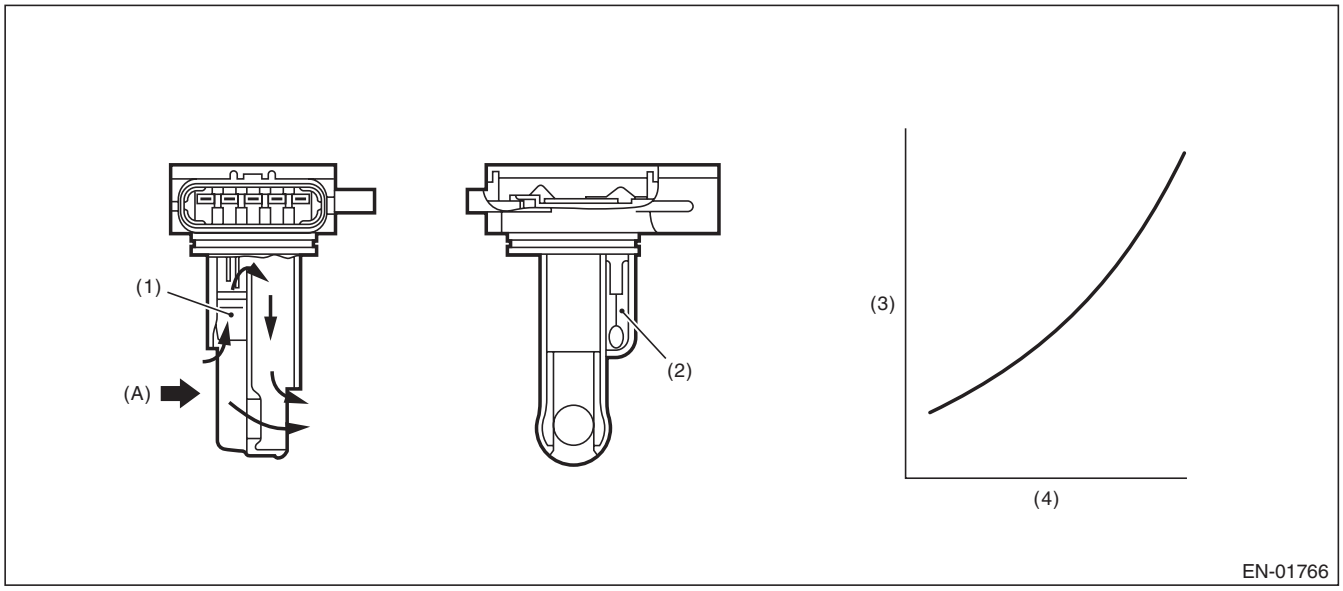

(A) Air

(1) Air flow sensor
(2) Intake air temperature sensor
(3) Voltage (V)
(4) Amount of intake air (kg (lb)/s)

3. ENABLE CONDITION

Secondary Parameters	Enable Conditions
Engine coolant temperature	≥ 75 °C (167 °F)

4. GENERAL DRIVING CYCLE

Perform the diagnosis continuously after idling.

GETtheMANUALS.org

5. DIAGNOSTIC METHOD

- **Abnormality Judgment**

Judge as NG when Low side or High side becomes NG.
If the duration of time while the following conditions are met is longer than the time indicated, judge as NG.

Judgment Value

Malfunction Criteria	Threshold Value
Low	
Output voltage	< 1.67 V
Engine speed	≥ 2000 rpm
Throttle opening angle	≥ 15 °
Intake manifold pressure	≥ 73.3 kPa (550 mmHg, 21.7 inHg)
High (1)	
Output voltage	≥ 1.83 V
Engine speed	525 rpm — 850 rpm
Throttle opening angle	< 4.5 °
Intake manifold pressure	≥ 46.7 kPa (350 mmHg, 13.8 inHg)
High (2)	
Output voltage	≥ 1.67 V
Engine speed	525 rpm — 850 rpm
Throttle opening angle	< 4.5 °
Intake manifold pressure	≥ 46.7 kPa (350 mmHg, 13.8 inHg)
Fuel system diagnosis	Rich side malfunction

Time Needed for Diagnosis:
Low: 5000 ms
High: 5000 ms
Malfunction Indicator Light Illumination: Illuminates when malfunction occurs in 2 continuous driving cycles.

- **Normality Judgment**

Judge as OK and clear the NG when both Low side and High side become OK.
Judge as OK and clear the NG if the continuous time while the following conditions are established is more than the predetermined time.

Judgment Value

Malfunction Criteria	Threshold Value
Low	
Output voltage	≥ 1.67 V
Engine speed	≥ 2000 rpm
Throttle opening angle	≥ 15 °
Intake manifold pressure	≥ 73.3 kPa (550 mmHg, 21.7 inHg)
High	
Output voltage	< 1.83 V
Engine speed	525 rpm — 850 rpm
Throttle opening angle	< 4.5 °
Intake manifold pressure	< 46.7 kPa (350 mmHg, 13.8 inHg)
Fuel system diagnosis	Rich side normal

Time Needed for Diagnosis:
Low: Less than 1 second
High: Less than 1 second

GETtheMANUALS.org

U: DTC P0102 MASS OR VOLUME AIR FLOW CIRCUIT LOW INPUT

1. OUTLINE OF DIAGNOSIS

Detect open or short circuits of the air flow sensor.
Judge as NG if out of specification.

2. COMPONENT DESCRIPTION

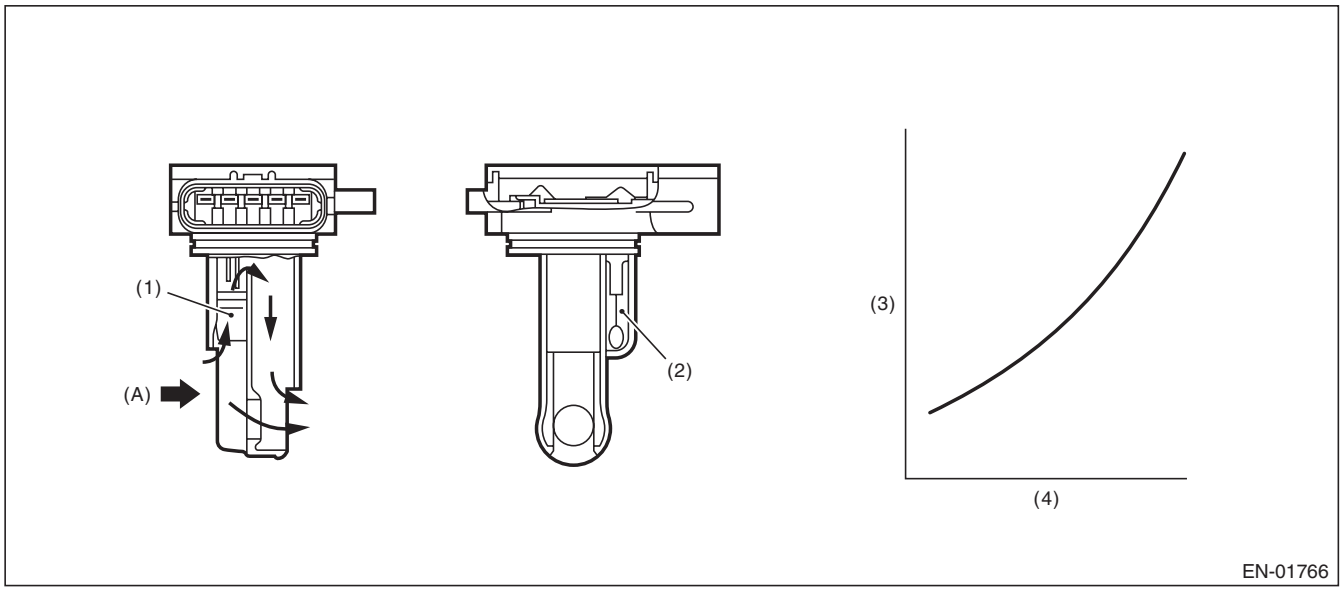

(A) Air

(1) Air flow sensor
(2) Intake air temperature sensor
(3) Voltage (V)
(4) Amount of intake air (kg (lb)/s)

3. ENABLE CONDITION

Secondary Parameters	Enable Conditions
None	

4. GENERAL DRIVING CYCLE

Always perform the diagnosis continuously.

GETtheMANUALS.org

5. DIAGNOSTIC METHOD

- **Abnormality Judgment**

If the duration of time while the following conditions are met is longer than the time indicated, judge as NG.

Judgment Value

Malfunction Criteria	Threshold Value
Output voltage	≤ 0.22 V

Time Needed for Diagnosis: 500 ms
Malfunction Indicator Light Illumination: Illuminates as soon as a malfunction occurs.

- **Normality Judgment**

Judge as OK and clear the NG if the continuous time while the following conditions are established is more than the predetermined time.

Judgment Value

Malfunction Criteria	Threshold Value
Output voltage	> 0.22 V

Time Needed for Diagnosis: Less than 1 second

GETtheMANUALS.org

V: DTC P0103 MASS OR VOLUME AIR FLOW CIRCUIT HIGH INPUT

1. OUTLINE OF DIAGNOSIS

Detect open or short circuits of the air flow sensor.
Judge as NG if out of specification.

2. COMPONENT DESCRIPTION

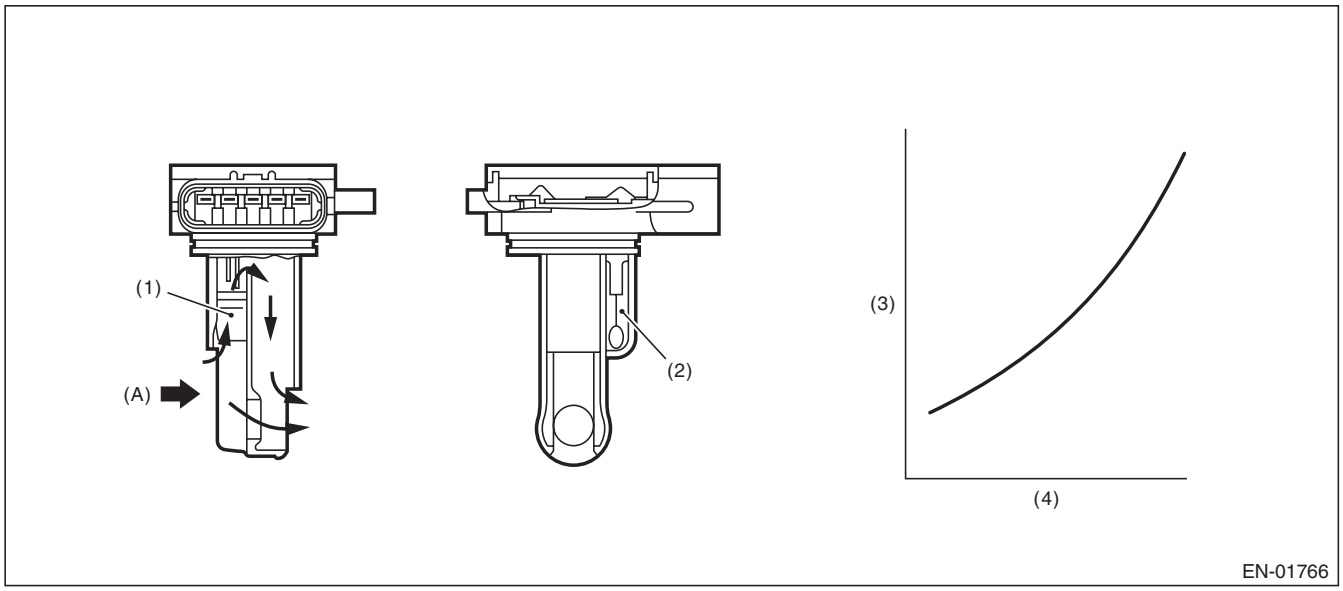

(A) Air

(1) Air flow sensor
(2) Intake air temperature sensor
(3) Voltage (V)
(4) Amount of intake air (kg (lb)/s)

3. ENABLE CONDITION

Secondary Parameters	Enable Conditions
None	

4. GENERAL DRIVING CYCLE

Always perform the diagnosis continuously.

GETtheMANUALS.org

5. DIAGNOSTIC METHOD

- **Abnormality Judgment**

If the duration of time while the following conditions are met is longer than the time indicated, judge as NG.

Judgment Value

Malfunction Criteria	Threshold Value
Output voltage	≥ 4.69 V

Time Needed for Diagnosis: 500 ms
Malfunction Indicator Light Illumination: Illuminates as soon as a malfunction occurs.

- **Normality Judgment**

Judge as OK and clear the NG if the continuous time while the following conditions are established is more than the predetermined time.

Judgment Value

Malfunction Criteria	Threshold Value
Output voltage	< 4.69 V

Time Needed for Diagnosis: Less than 1 second

GETtheMANUALS.org

W: DTC P0107 MANIFOLD ABSOLUTE PRESSURE/BAROMETRIC PRESSURE CIRCUIT LOW INPUT

1. OUTLINE OF DIAGNOSIS

Detect the open or short circuit of intake manifold pressure sensor.
Judge as NG if out of specification.

2. COMPONENT DESCRIPTION

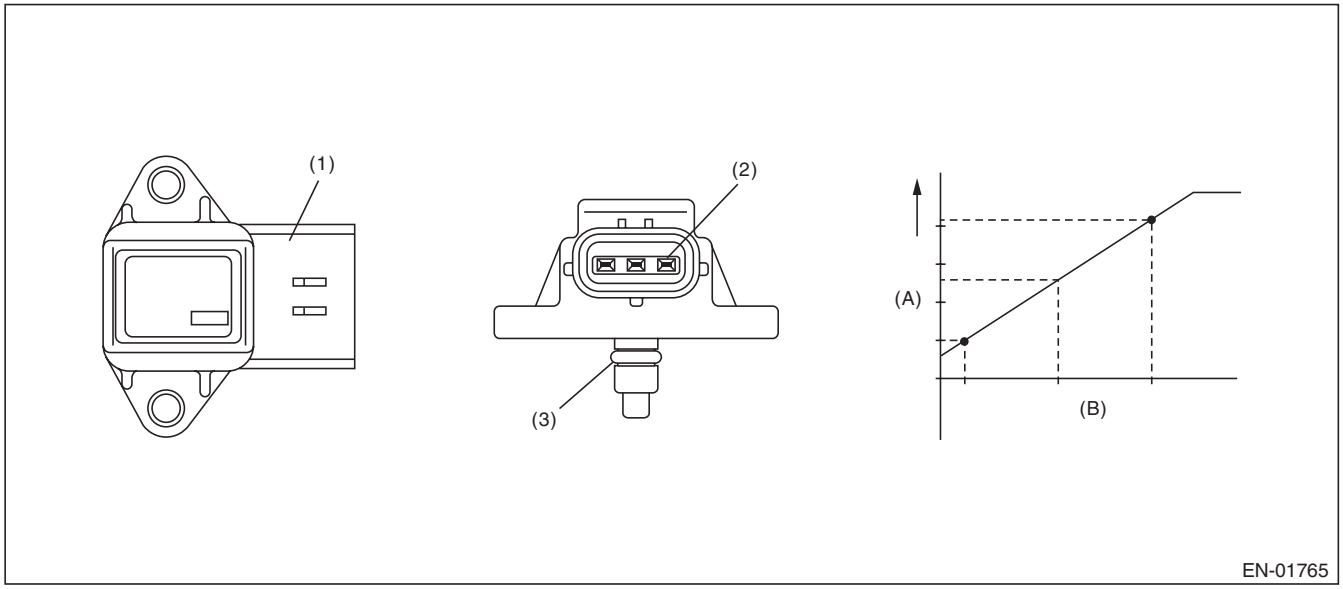

(A) Output voltage (B) Absolute pressure

(1) Connector (2) Terminals (3) O-ring

3. ENABLE CONDITION

Secondary Parameters	Enable Conditions
None	

4. GENERAL DRIVING CYCLE

Always perform the diagnosis continuously.

GETtheMANUALS.org

5. DIAGNOSTIC METHOD

- **Abnormality Judgment**

If the duration of time while the following conditions are met is longer than the time indicated, judge as NG.

Judgment Value

Malfunction Criteria	Threshold Value
Output voltage	≤ 0.606 V

Time Needed for Diagnosis: 500 ms
Malfunction Indicator Light Illumination: Illuminates as soon as a malfunction occurs.

- **Normality Judgment**

Judge as OK and clear the NG if the continuous time while the following conditions are established is more than the predetermined time.

Judgment Value

Malfunction Criteria	Threshold Value
Output voltage	> 0.606 V

Time Needed for Diagnosis: Less than 1 second

GETtheMANUALS.org

X: DTC P0108 MANIFOLD ABSOLUTE PRESSURE/BAROMETRIC PRESSURE CIRCUIT HIGH INPUT

1. OUTLINE OF DIAGNOSIS

Detect the open or short circuit of intake manifold pressure sensor.
Judge as NG if out of specification.

2. COMPONENT DESCRIPTION

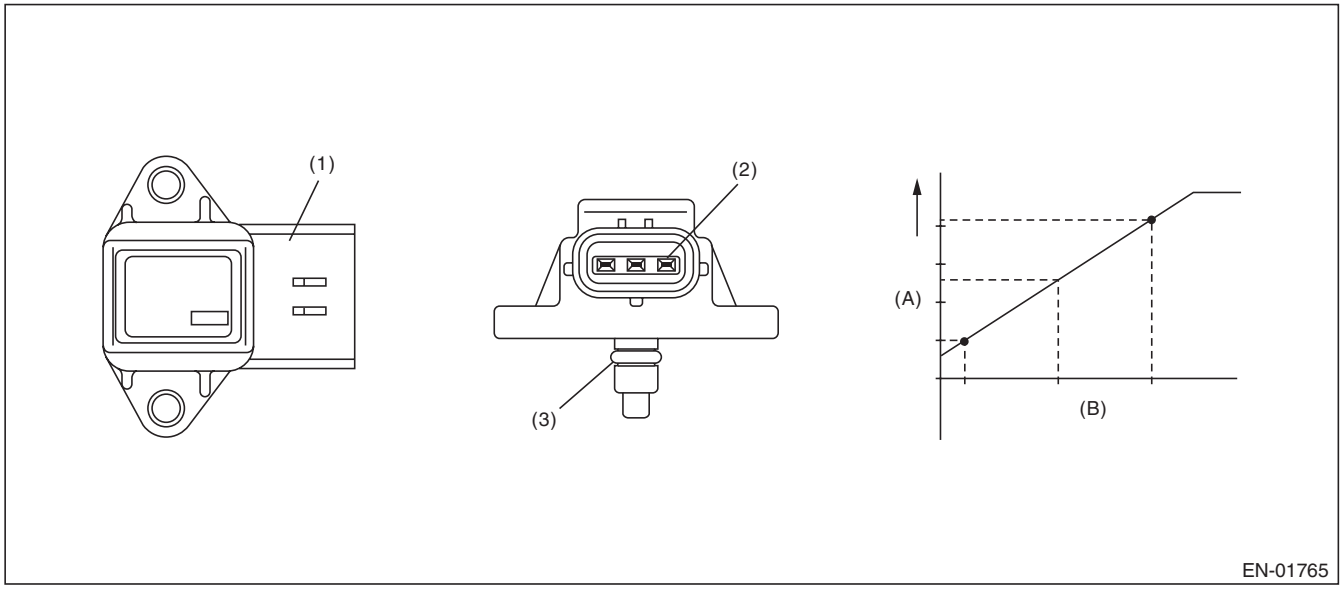

(A) Output voltage (B) Absolute pressure

(1) Connector (2) Terminals (3) O-ring

3. ENABLE CONDITION

Secondary Parameters	Enable Conditions
None	

4. GENERAL DRIVING CYCLE

Always perform the diagnosis continuously.

GETtheMANUALS.org

5. DIAGNOSTIC METHOD

- **Abnormality Judgment**

If the duration of time while the following conditions are met is longer than the time indicated, judge as NG.

Judgment Value

Malfunction Criteria	Threshold Value
Output voltage	≥ 3.906 V

Time Needed for Diagnosis: 500 ms
Malfunction Indicator Light Illumination: Illuminates as soon as a malfunction occurs.

- **Normality Judgment**

Judge as OK and clear the NG if the continuous time while the following conditions are established is more than the predetermined time.

Judgment Value

Malfunction Criteria	Threshold Value
Output voltage	< 3.906 V

Time Needed for Diagnosis: Less than 1 second

GETtheMANUALS.org

Y: DTC P0111 INTAKE AIR TEMPERATURE SENSOR 1 CIRCUIT RANGE/PERFORMANCE

1. OUTLINE OF DIAGNOSIS

Detect the malfunction of intake air temperature sensor output property.
Judge as NG when the intake air temperature is not varied whereas it seemed to be varied from the viewpoint of engine condition.

2. COMPONENT DESCRIPTION

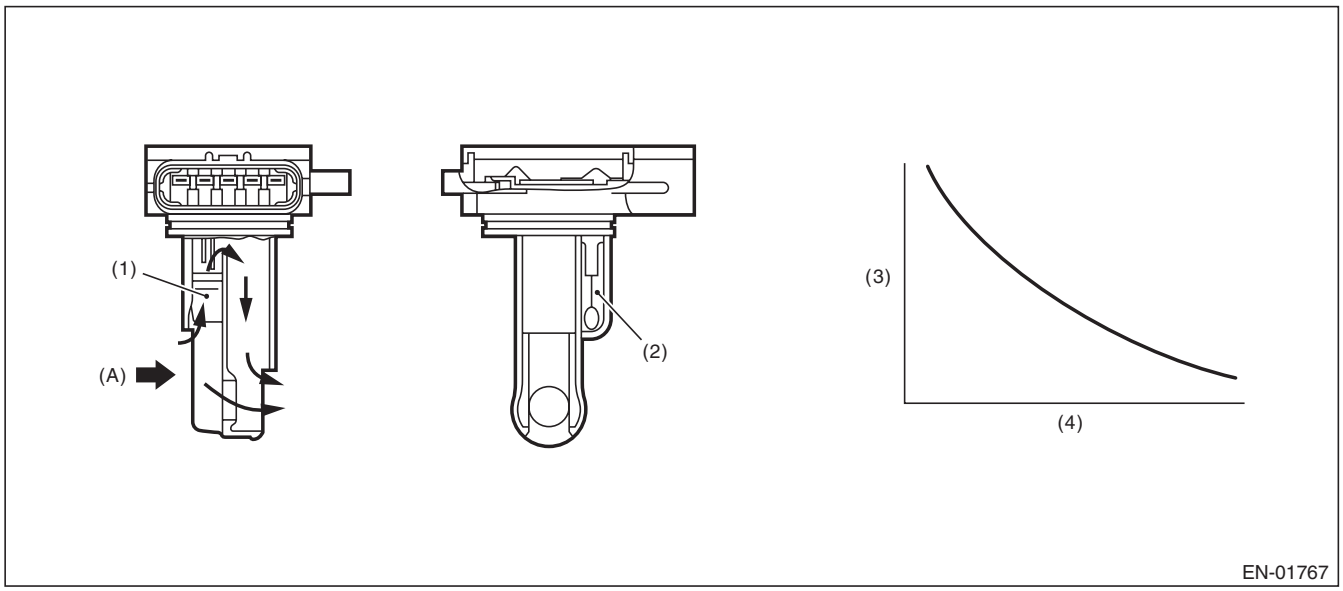

(A) Air

(1) Air flow sensor
(2) Intake air temperature sensor
(3) Resistance value (Ω)
(4) Intake air temperature °C (°F)

GETtheMANUALS.org

3. ENABLE CONDITION

Secondary Parameters	Enable Conditions
Engine coolant temperature at engine starting	< 35 °C (95 °F)
Battery voltage	≥ 10.9 V
Continuous time when the vehicle speed is less than 140 km/h (87 MPH	≥ 600 s
Engine coolant temperature	≥ 75 °C (167 °F)
Intake air amount sum value	≥ Value of Map 1
Number of experiences under conditions below	≥ 3 time(s)
• Continuous time when vehicle speed is less than 4 km/h (2.5 MPH)	≥ Value from Map 2
• Continuous time when vehicle speed is 40 km/h (24.9 MPH) or more	≥ 15 s
and	
Establishing time of 1, 2	≥ 15 s
1. Intake air amount	≥ 10 g/s (0.35 oz/s)
2. Vehicle speed	≥ 4 km/h (2.5 MPH)

Map 1

Engine coolant temperature °C (°F)	–20 (–4)	–10 (14)	0 (32)	10 (50)	20 (68)
Intake air amount sum value (g (oz))	50000 (1763.5)	7400 (261)	6600 (232.78)	5800 (204.57)	5000 (176.35)

Map 2

Engine coolant temperature °C (°F)	–30 (–22)	0 (32)	10 (50)	20 (68)
Continuous time (s) when vehicle speed is less than 4 km/h (2.5 MPH)	250	40	32	24

4. GENERAL DRIVING CYCLE

Perform the diagnosis when the vehicle speed condition is met after warming up from a cold condition.

GETtheMANUALS.org

5. DIAGNOSTIC METHOD

- **Abnormality Judgment**

Judge as NG when the following conditions are established.

Judgment Value

Malfunction Criteria	Threshold Value
Output voltage difference between Max. and Min.	< 0.02 V(Equivalent to approximately 0.5°C (0.9°F) near 25°C)

Time Needed for Diagnosis: Less than 1 second
Malfunction Indicator Light Illumination: Illuminates when malfunction occurs in 2 continuous driving cycles.

- **Normality Judgment**

Judge as OK and clear the NG if the following conditions are established.

Judgment Value

Malfunction Criteria	Threshold Value
Output voltage difference between Max. and Min.	≥ 0.02 V

Time Needed for Diagnosis: Less than 1 second

GETtheMANUALS.org

Z: DTC P0112 INTAKE AIR TEMPERATURE SENSOR 1 CIRCUIT LOW

1. OUTLINE OF DIAGNOSIS

Detect open or short circuit of the intake air temperature sensor.
Judge as NG if out of specification.

2. COMPONENT DESCRIPTION

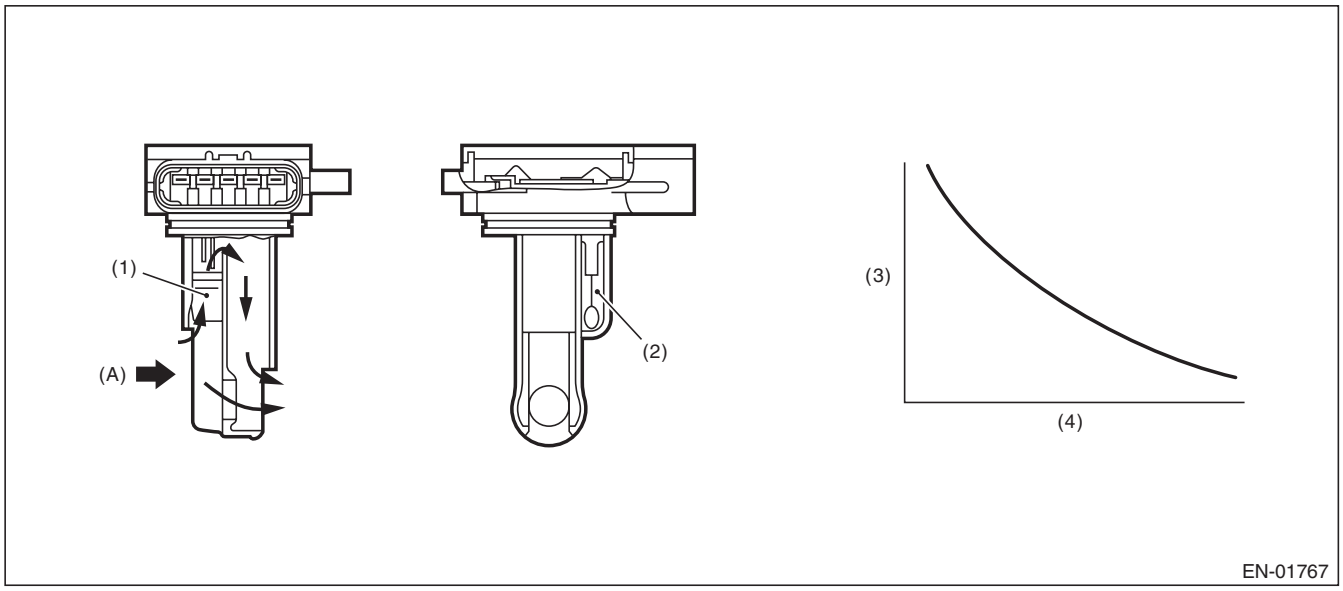

(A) Air

(1) Air flow sensor
(2) Intake air temperature sensor
(3) Resistance value (Ω)
(4) Intake air temperature °C (°F)

3. ENABLE CONDITION

Secondary Parameters	Enable Conditions
None	

4. GENERAL DRIVING CYCLE

Always perform the diagnosis continuously.

GETtheMANUALS.org

5. DIAGNOSTIC METHOD

- **Abnormality Judgment**

If the duration of time while the following conditions are met is longer than the time indicated, judge as NG.

Judgment Value

Malfunction Criteria	Threshold Value
Output voltage	< 0.395 V

Time Needed for Diagnosis: 500 ms
Malfunction Indicator Light Illumination: Illuminates as soon as a malfunction occurs.

- **Normality Judgment**

Judge as OK and clear the NG if the continuous time while the following conditions are established is more than the predetermined time.

Judgment Value

Malfunction Criteria	Threshold Value
Output voltage	≥ 0.395 V

Time Needed for Diagnosis: Less than 1 second

GETtheMANUALS.org

AA:DTC P0113 INTAKE AIR TEMPERATURE SENSOR 1 CIRCUIT HIGH

1. OUTLINE OF DIAGNOSIS

Detect open or short circuit of the intake air temperature sensor.
Judge as NG if out of specification.

2. COMPONENT DESCRIPTION

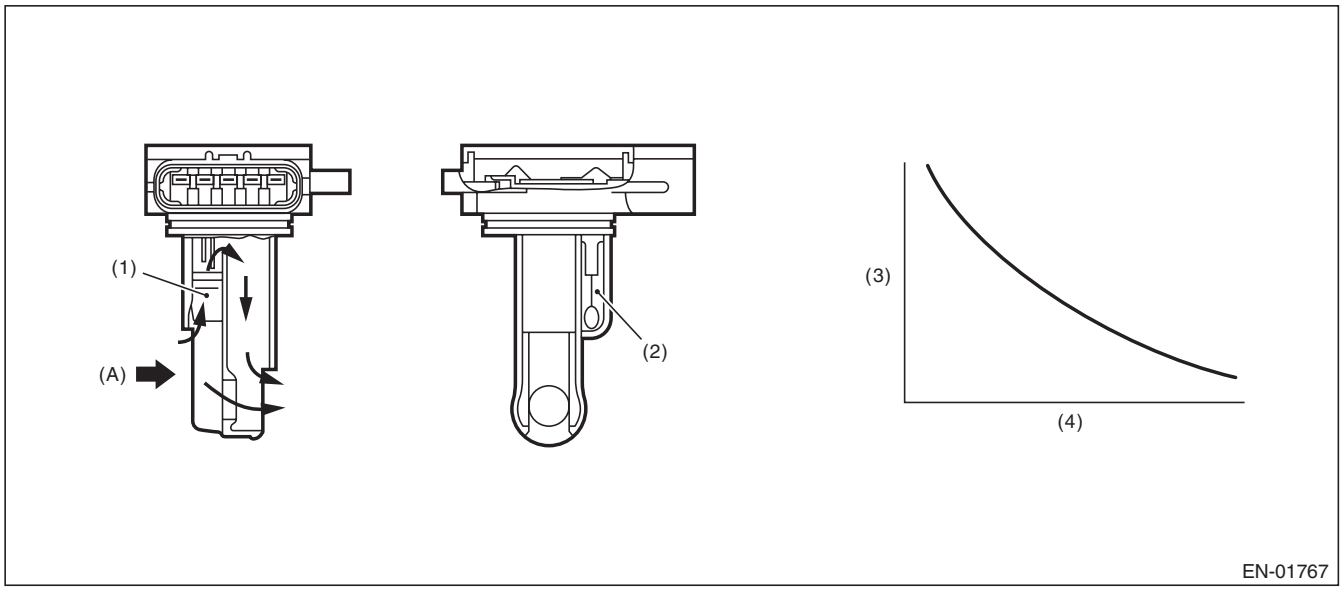

(A) Air

(1) Air flow sensor
(2) Intake air temperature sensor
(3) Resistance value (Ω)
(4) Intake air temperature °C (°F)

3. ENABLE CONDITION

Secondary Parameters	Enable Conditions
None	

4. GENERAL DRIVING CYCLE

Always perform the diagnosis continuously.

GETtheMANUALS.org

5. DIAGNOSTIC METHOD

- **Abnormality Judgment**

If the duration of time while the following conditions are met is longer than the time indicated, judge as NG.

Judgment Value

Malfunction Criteria	Threshold Value
Output voltage	≥ 4.712 V

Time Needed for Diagnosis: 500 ms
Malfunction Indicator Light Illumination: Illuminates as soon as a malfunction occurs.

- **Normality Judgment**

Judge as OK and clear the NG if the continuous time while the following conditions are established is more than the predetermined time.

Judgment Value

Malfunction Criteria	Threshold Value
Output voltage	< 4.712 V

Time Needed for Diagnosis: Less than 1 second

GETtheMANUALS.org

AB:DTC P0117 ENGINE COOLANT TEMPERATURE CIRCUIT LOW

1. OUTLINE OF DIAGNOSIS

Detect the open or short circuit of the engine coolant temperature sensor.
Judge as NG if out of specification.

2. COMPONENT DESCRIPTION

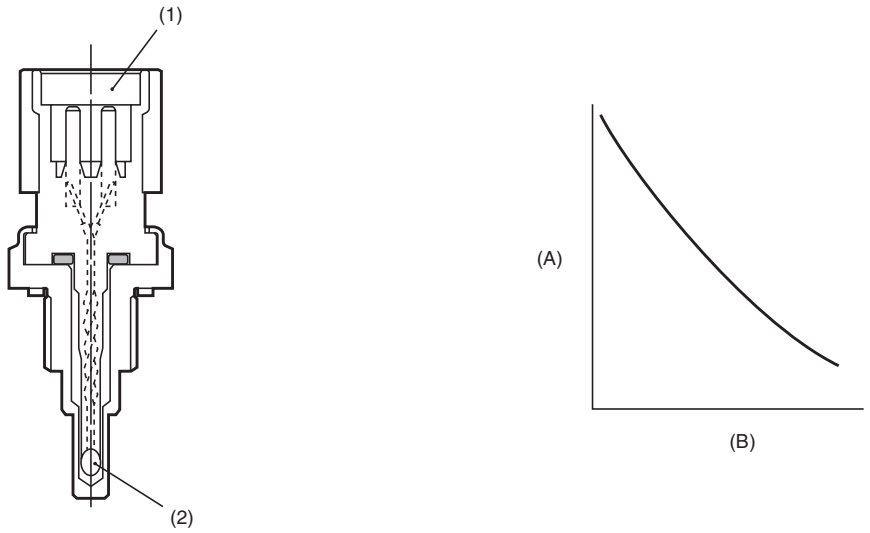

(A) Resistance value (kΩ) (B) Temperature °C (°F)

(1) Connector (2) Thermistor element

3. ENABLE CONDITION

Secondary Parameters	Enable Conditions
None	

4. GENERAL DRIVING CYCLE

Always perform the diagnosis continuously.

GETtheMANUALS.org

5. DIAGNOSTIC METHOD

- **Abnormality Judgment**

If the duration of time while the following conditions are met is longer than the time indicated, judge as NG.

Judgment Value

Malfunction Criteria	Threshold Value
Output voltage	< 0.464 V

Time Needed for Diagnosis: 500 ms
Malfunction Indicator Light Illumination: Illuminates as soon as a malfunction occurs.

- **Normality Judgment**

Judge as OK and clear the NG if the continuous time while the following conditions are established is more than the predetermined time.

Judgment Value

Malfunction Criteria	Threshold Value
Output voltage	≥ 0.464 V

Time Needed for Diagnosis: Less than 1 second

GETtheMANUALS.org

AC:DTC P0118 ENGINE COOLANT TEMPERATURE CIRCUIT HIGH

1. OUTLINE OF DIAGNOSIS

Detect the open or short circuit of the engine coolant temperature sensor.
Judge as NG if out of specification.

2. COMPONENT DESCRIPTION

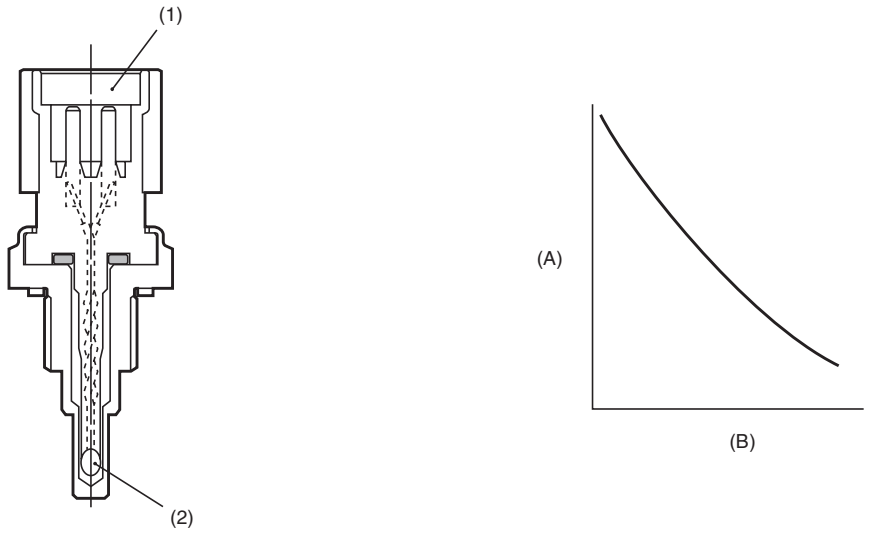

(A) Resistance value (kΩ) (B) Temperature °C (°F)

(1) Connector (2) Thermistor element

3. ENABLE CONDITION

Secondary Parameters	Enable Conditions
None	

4. GENERAL DRIVING CYCLE

Always perform the diagnosis continuously.

GETtheMANUALS.org

5. DIAGNOSTIC METHOD

- **Abnormality Judgment**

If the duration of time while the following conditions are met is longer than the time indicated, judge as NG.

Judgment Value

Malfunction Criteria	Threshold Value
Output voltage	≥ 4.702 V

Time Needed for Diagnosis: 500 ms
Malfunction Indicator Light Illumination: Illuminates as soon as a malfunction occurs.

- **Normality Judgment**

Judge as OK and clear the NG if the continuous time while the following conditions are established is more than the predetermined time.

Judgment Value

Malfunction Criteria	Threshold Value
Output voltage	< 4.702 V

Time Needed for Diagnosis: Less than 1 second

GETtheMANUALS.org

AD:DTC P0122 THROTTLE/PEDAL POSITION SENSOR/SWITCH “A” CIRCUIT LOW

1. OUTLINE OF DIAGNOSIS

Detect the open or short circuit of throttle position sensor 1.
Judge as NG if out of specification.

2. COMPONENT DESCRIPTION

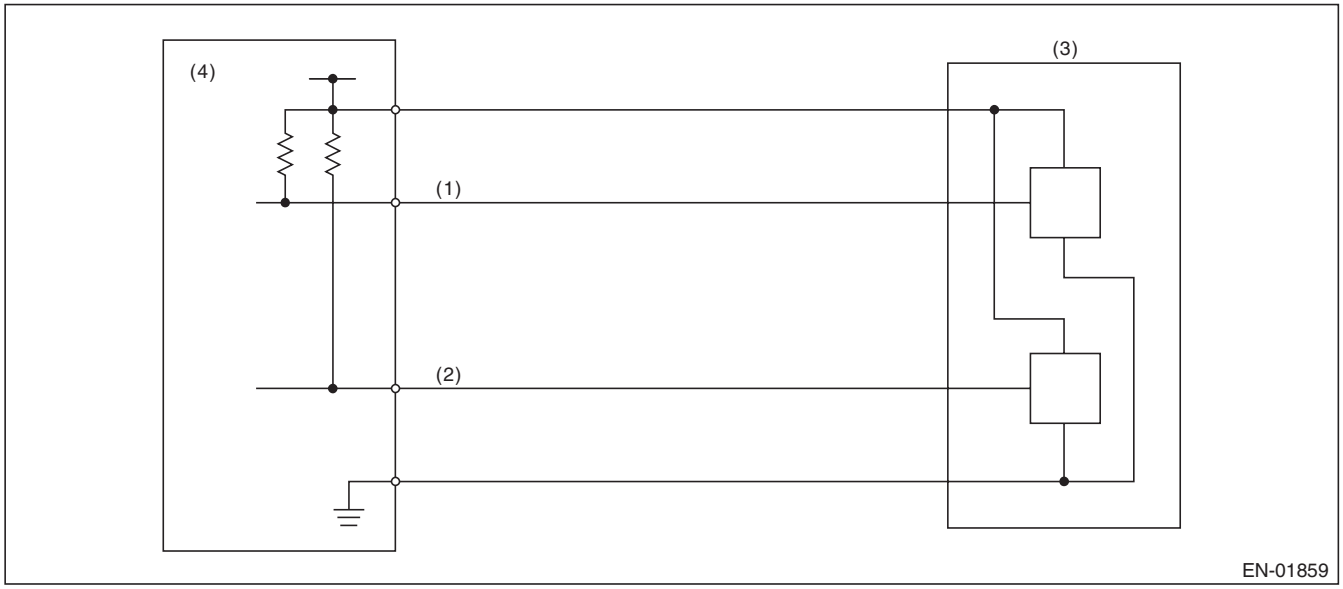

(1) Throttle position sensor 1 signal
(2) Throttle position sensor 2 signal
(3) Throttle position sensor
(4) Engine control module (ECM)

3. ENABLE CONDITION

Secondary Parameters	Enable Conditions
Ignition switch	ON
Battery voltage	≥ 6 V

4. GENERAL DRIVING CYCLE

Always perform the diagnosis continuously.

GETtheMANUALS.org

5. DIAGNOSTIC METHOD

- **Abnormality Judgment**

If the duration of time while the following conditions are met is longer than the time indicated, judge as NG.

Judgment Value

Malfunction criteria	Threshold value
Sensor 1 input voltage	≤ 0.23 V

Time Needed for Diagnosis: 24 ms
Malfunction Indicator Light Illumination: Illuminates as soon as a malfunction occurs.

- **Normality Judgment**

Judge as OK and clear the NG if the continuous time while the following conditions are established is more than the predetermined time.

Judgment Value

Malfunction criteria	Threshold value
Sensor 1 input voltage	> 0.23 V

Time Needed for Diagnosis: 24 ms

GETtheMANUALS.org

AE:DTC P0123 THROTTLE/PEDAL POSITION SENSOR/SWITCH “A” CIRCUIT HIGH

1. OUTLINE OF DIAGNOSIS

Detect the open or short circuit of throttle position sensor 1.
Judge as NG if out of specification.

2. COMPONENT DESCRIPTION

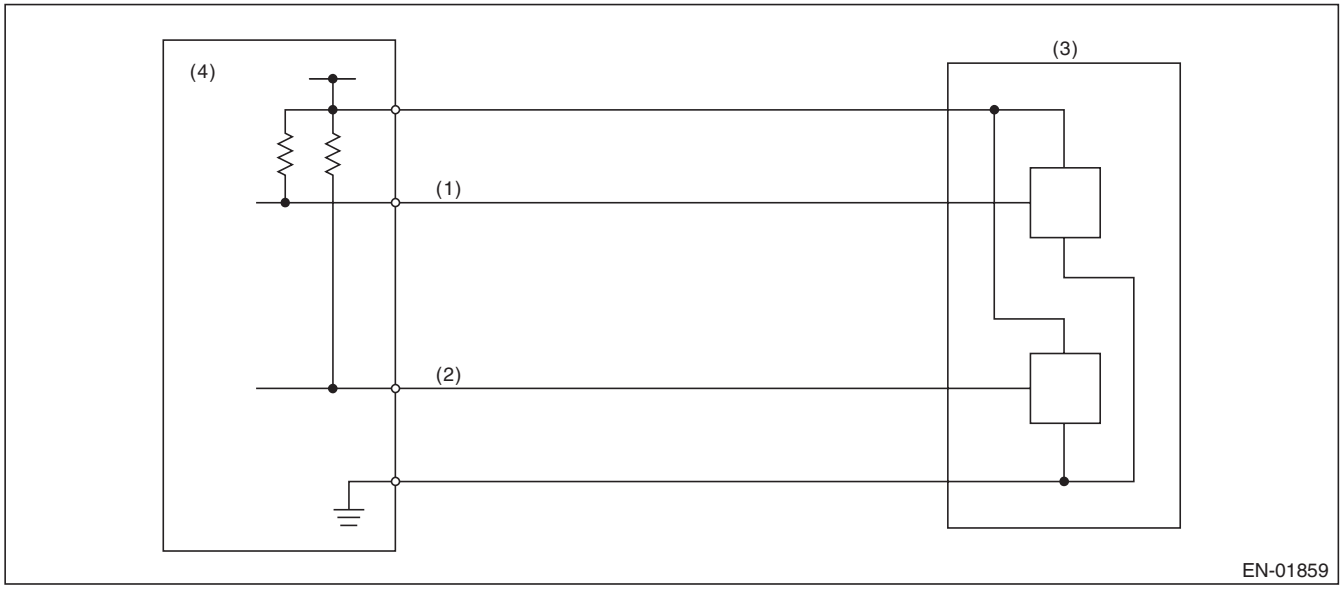

(1) Throttle position sensor 1 signal
(2) Throttle position sensor 2 signal
(3) Throttle position sensor
(4) Engine control module (ECM)

3. ENABLE CONDITION

Secondary Parameters	Enable Conditions
Ignition switch	ON
Battery voltage	≥ 6 V

4. GENERAL DRIVING CYCLE

Always perform the diagnosis continuously.

GETtheMANUALS.org

5. DIAGNOSTIC METHOD

- **Abnormality Judgment**

If the duration of time while the following conditions are met is longer than the time indicated, judge as NG.

Judgment Value

Malfunction criteria	Threshold value
Sensor 1 input voltage	≥ 4.858 V

Time Needed for Diagnosis: 24 ms
Malfunction Indicator Light Illumination: Illuminates as soon as a malfunction occurs.

- **Normality Judgment**

Judge as OK and clear the NG if the continuous time while the following conditions are established is more than the predetermined time.

Judgment Value

Malfunction criteria	Threshold value
Sensor 1 input voltage	< 4.858 V

Time Needed for Diagnosis: 24 ms

GETtheMANUALS.org

AF:DTC P0125 INSUFFICIENT COOLANT TEMPERATURE FOR CLOSED LOOP FUEL CONTROL

1. OUTLINE OF DIAGNOSIS

Detect the malfunction of engine coolant temperature output property.
Judge as NG when the engine coolant temperature does not rise in driving conditions where it should.

2. COMPONENT DESCRIPTION

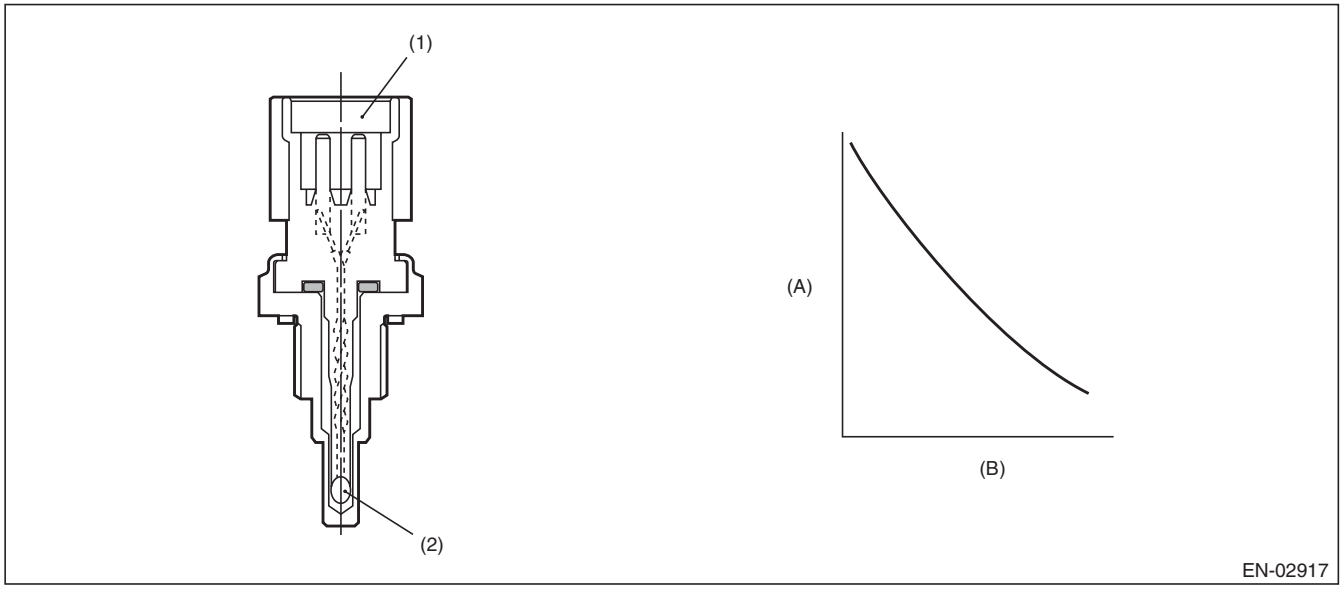

(A) Resistance value (kΩ) (B) Temperature °C (°F)

(1) Connector (2) Thermistor element

3. ENABLE CONDITION

Secondary Parameters	Enable Conditions
Engine speed	≥ Value from Map
Battery voltage	≥ 10.9 V

Map

Engine coolant temperature °C (°F)	–40 (–40)	–30 (–22)	–20 (–4)	–10 (14)	0 (32)	10 (50)	20 (68)	30 (86)
Engine speed rpm	500	500	500	500	500	500	500	500

Engine coolant temperature °C (°F)	40 (104)	50 (122)	60 (140)	70 (158)	80 (176)	90 (194)	100 (212)	110 (230)
Engine speed rpm	500	500	500	500	500	500	500	500

4. GENERAL DRIVING CYCLE

Perform the diagnosis only once after engine start.

GETtheMANUALS.org

5. DIAGNOSTIC METHOD

- **Abnormality Judgment**

Judge as NG if the criteria below are met.

Judgment Value

Malfunction Criteria	Threshold Value
Engine coolant temperature	< 20 °C (68 °F)
Timer for diagnosis after engine start	≥ Judgment value of timer after engine start

Timer for diagnosis after engine start
a. Timer stop at fuel cut
b. During the driving conditions except a) above, timer counts up as follows.
64 ms + TWCNT ms (when at 64 ms)
TWCNT is defined as follows,
TWCNT = 0 at idle switch ON,
TWCNT show on the following table at idle switch OFF.

		Vehicle speed km/h (MPH)							
		0 (0)	8 (5)	16 (9.9)	24 (14.9)	32 (19.9)	40 (24.9)	48 (29.8)	56 (34.8)
Temperature °C (°F)	–20 (–4)	0 ms	37.136 ms	74.272 ms	111.41 ms	126.66 ms	141.91 ms	163.59 ms	185.26 ms
	–10 (14)	0 ms	27.391 ms	54.782 ms	82.173 ms	99.65 ms	117.13 ms	135.96 ms	154.8 ms
	0 (32)	0 ms	17.646 ms	35.292 ms	52.938 ms	72.64 ms	92.341 ms	108.34 ms	124.33 ms
	10 (50)	0 ms	35 ms	40 ms	50 ms	65 ms	65 ms	65 ms	65 ms
	20 (68)	0 ms	35 ms	40 ms	50 ms	65 ms	65 ms	65 ms	65 ms

Judgment value of timer after engine starting
t = 429523 ms – 28605 ms × Ti
Ti : The lowest coolant temperature after engine start
Time Needed for Diagnosis: Less than 1 second
Malfunction Indicator Light Illumination: Illuminates when malfunction occurs in 2 continuous driving cycles.

- **Normality Judgment**

Judge as OK and clear the NG when the malfunction criteria below are met.

Judgment Value

Malfunction Criteria	Threshold Value
Engine coolant temperature	≥ 20 °C (68 °F)

Time Needed for Diagnosis: Less than 1 second

GETtheMANUALS.org

AG:DTC P0126 INSUFFICIENT ENGINE COOLANT TEMPERATURE FOR STABLE OPERATION

1. OUTLINE OF DIAGNOSIS

Detect the malfunction of the engine coolant temperature sensor characteristics.
When the ignition is ON after the specified period of soaking time has elapsed, compare the engine coolant temperature with intake air temperature. Judge as NG if the difference between two temperatures is larger than the predetermined value and the engine coolant temperature becomes the specified value or more.

2. COMPONENT DESCRIPTION

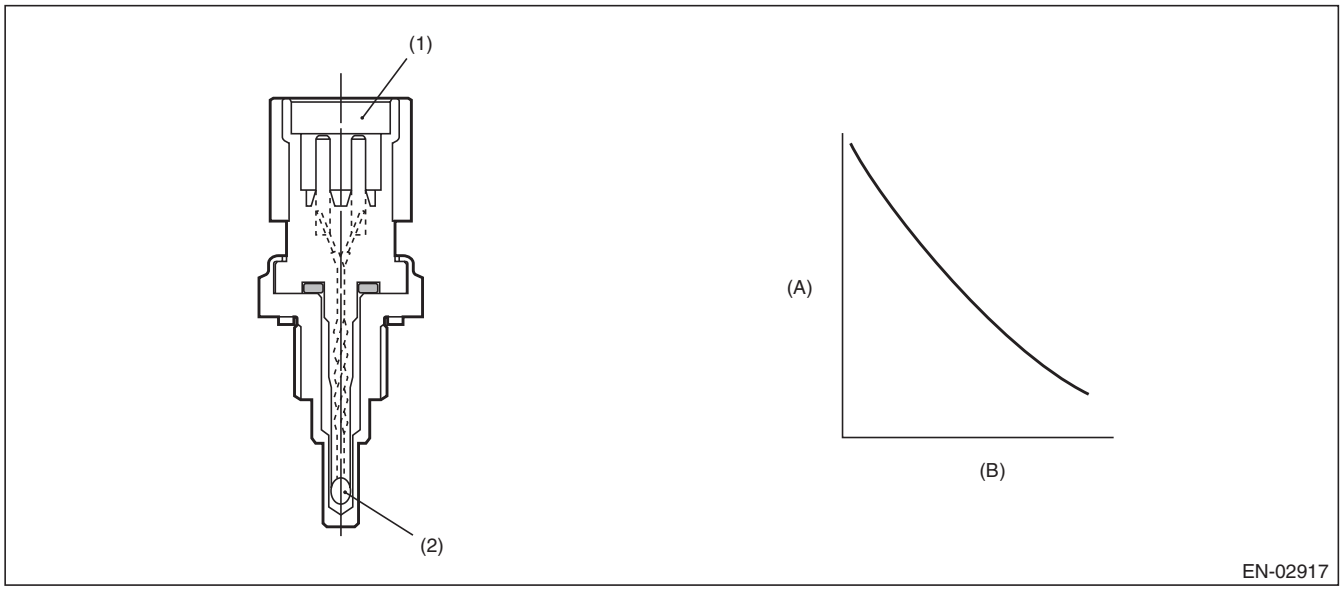

(A) Resistance value (kΩ) (B) Temperature °C (°F)

(1) Connector (2) Thermistor element

3. ENABLE CONDITION

Secondary Parameters	Enable Conditions
Battery voltage	≥ 10.9 V
Soaking time	≥ 21600 s
Engine coolant temperature at the last engine stop	≥ Value from Map

Map

Estimate ambient temperature °C (°F)	–7 (19.4)	8 (46.4)	10 (50)	25 (77)
Engine coolant temperature at the last engine stop °C (°F)	83.1 (181.6)	83.1 (181.6)	83.1 (181.6)	83.1 (181.6)

4. GENERAL DRIVING CYCLE

Perform the diagnosis only once after starting the engine.

GETtheMANUALS.org

5. DIAGNOSTIC METHOD

• Abnormality Judgment

If the duration of time while the following conditions are met is longer than the time indicated, judge as NG.

Judgment Value

Malfunction Criteria	Threshold Value
All of the following conditions are established.	
Engine coolant temperature – intake air temperature	> 15°C (27°F)
Engine coolant temperature	> 40 °C (104 °F)

Time Needed for Diagnosis: 512 ms
Malfunction Indicator Light Illumination: Illuminates when malfunction occurs in 2 continuous driving cycles.

• Normality Judgment

Judge as OK and clear the NG if the continuous time while the following conditions are established is more than the predetermined time.

Judgment Value

Malfunction Criteria	Threshold Value
When any one of the followings is established.	
Engine coolant temperature – intake air temperature	≤ 15°C (27°F)
Engine coolant temperature	≤ 40 °C (104 °F)

Time Needed for Diagnosis: Less than 1 second

GETtheMANUALS.org

AH:DTC P0128 COOLANT THERMOSTAT (ENGINE COOLANT TEMPERATURE BELOW THERMOSTAT REGULATING TEMPERATURE)

1. OUTLINE OF DIAGNOSIS

Detect malfunctions of the thermostat function.
Judge as NG when any one of the following conditions is established.

- When the actual engine coolant temperature does not reach the maximum temperature necessary to perform other OBDII diagnosis and Σ (Estimated engine coolant temperature – actual engine coolant temperature) exceeded the predetermined value. (Judgment 1)
- When the actual engine coolant temperature does not reach the range within –11°C (–19.8°F) from the regulated temperature and Σ (Estimated engine coolant temperature – actual engine coolant temperature) exceeded the predetermined value. (Judgment 2)
- When the difference between the estimated coolant temperature and the actual engine coolant temperature exceeds the predetermined value, and Σ (Estimated engine coolant temperature – actual engine coolant temperature) exceeded the predetermined value. (Judgment 3)

2. COMPONENT DESCRIPTION

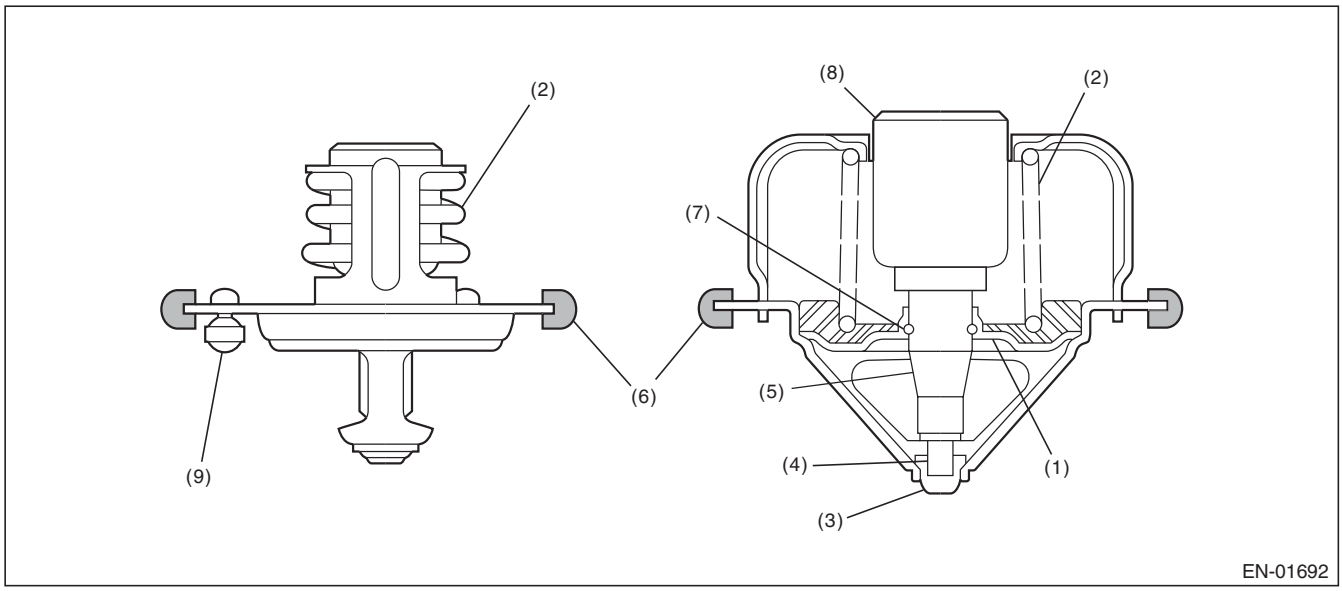

(1)	Valve	(4)	Piston	(7)	Stop ring
(2)	Spring	(5)	Guide	(8)	Wax element
(3)	Stopper	(6)	Rubber seal	(9)	Jiggle valve

GETtheMANUALS.org

3. ENABLE CONDITION

Secondary Parameters	Enable Conditions
<Judgment 1>	
Battery voltage	≥ 10.9 V
Estimate ambient temperature	≥ –7 °C (19.4 °F)
Vehicle speed	≥ 30 km/h (18.6 MPH)
Estimated coolant temperature	≥ Value of Map 1
<Judgment 2>	
Battery voltage	≥ 10.9 V
Estimate ambient temperature	≥ –7 °C (19.4 °F)
Vehicle speed	≥ 30 km/h (18.6 MPH)
Estimated coolant temperature	≥ Value from Map 2
<Judgment 3>	
Battery voltage	≥ 10.9 V
Estimate ambient temperature	≥ –7 °C (19.4 °F)
Vehicle speed	≥ 30 km/h (18.6 MPH)
Estimated coolant temperature	≥ Value from Map 3

Map 1

Engine coolant temperature at engine starting °C (°F)	–7 (19.4)	8 (46.4)	10 (50)	25 (77)
Estimated coolant temperature °C (°F)	75 (167)	75 (167)	75 (167)	75 (167)

Map 2

Engine coolant temperature at engine starting °C (°F)	–7 (19.4)	8 (46.4)	10 (50)	25 (77)
Estimated coolant temperature °C (°F)	83.1 (181.6)	83.1 (181.6)	83.1 (181.6)	83.1 (181.6)

Map 3

Engine coolant temperature at engine starting °C (°F)	–7 (19.4)	10 (50)	25 (77)	44 (111.2)
Estimated coolant temperature °C (°F)	59.9 (139.8)	67.6 (153.7)	74.5 (166.1)	83.1 (181.6)

4. GENERAL DRIVING CYCLE

Perform the diagnosis only once after starting the engine.

GETtheMANUALS.org

5. DIAGNOSTIC METHOD

• Abnormality Judgment

If the duration of time while the following conditions are met is longer than the time indicated, judge as NG.

Judgment Value

Malfunction Criteria	Threshold Value
When any one of the followings is established.	
<Judgment 1>	
Actual engine coolant temperature and Σ (Estimated engine coolant temperature – actual engine coolant temperature)	< Value of Map 4 > Value of Map 5
<Judgment 2>	
Actual engine coolant temperature and Σ (Estimated engine coolant temperature – actual engine coolant temperature)	< Regulated temperature – Value of Map 6 > Value of Map 7
<Judgment 3>	
Estimated engine coolant temperature – actual engine coolant temperature and Σ (Estimated engine coolant temperature – actual engine coolant temperature)	> Value of Map 8 > Value of Map 9

Map 4

Estimate ambient temperature °C (°F)	–7 (19.4)	8 (46.4)	10 (50)	25 (77)
Threshold Value °C (°F)	75 (167)	75 (167)	75 (167)	75 (167)

Map 5

Engine coolant temperature at engine starting °C (°F)	–7 (19.4)	0 (32)	8 (46.4)	10 (50)	25 (77)	30 (86)	35 (95)
Threshold Value °C (°F)	1731.6 (3116.9)	1731.6 (3116.9)	1731.6 (3116.9)	1731.6 (3116.9)	1731.6 (3116.9)	1731.6 (3116.9)	1200 (2160)

Map 6

Estimate ambient temperature °C (°F)	–7 (19.4)	8 (46.4)	10 (50)	25 (77)
Threshold Value °C (°F)	11.1 (20)	11.1 (20)	11.1 (20)	11.1 (20)

Map 7

Engine coolant temperature at engine starting °C (°F)	–7 (19.4)	0 (32)	8 (46.4)	10 (50)	25 (77)	35 (95)	45 (113)
Threshold Value °C (°F)	1731.6 (3116.9)	1731.6 (3116.9)	1731.6 (3116.9)	1731.6 (3116.9)	1731.6 (3116.9)	1731.6 (3116.9)	1200 (2160)

GETtheMANUALS.org

Map 8

Estimate ambient temperature °C (°F)	–7 (19.4)	8 (46.4)	10 (50)	25 (77)
Threshold Value °C (°F)	11.1 (20)	11.1 (20)	11.1 (20)	11.1 (20)

Map 9

Engine coolant temperature at engine starting °C (°F)	–7 (19.4)	8 (46.4)	10 (50)	25 (77)
Threshold Value °C (°F)	1731.6 (3116.9)	1731.6 (3116.9)	1731.6 (3116.9)	1731.6 (3116.9)

Time Needed for Diagnosis: 300 — 700 seconds
Malfunction Indicator Light Illumination: Illuminates when malfunction occurs in 2 continuous driving cycles.

- **Normality Judgment**

Judge as OK and clear the NG if the continuous time while the following conditions are established is more than the predetermined time.

Judgment Value

Malfunction Criteria	Threshold Value
All of the following conditions are established.	
<Judgment 1>	
Actual engine coolant temperature and Σ (Estimated engine coolant temperature – actual engine coolant temperature)	≥ Value of Map 4 ≤ Value of Map 5
<Judgment 2>	
Actual engine coolant temperature and Σ (Estimated engine coolant temperature – actual engine coolant temperature)	≥ Regulated temperature – Value of Map 6 ≤ Value of Map 7
<Judgment 3>	
Estimated engine coolant temperature – actual engine coolant temperature and Σ (Estimated engine coolant temperature – actual engine coolant temperature) and Actual engine coolant temperature	≤ Value of Map 8 ≤ Value of Map 9 ≥ Regulated temperature – Value of Map 10

Map 10

Estimate ambient temperature °C (°F)	–7 (19.4)	8 (46.4)	10 (50)	25 (77)
Threshold Value °C (°F)	11.1 (20)	11.1 (20)	11.1 (20)	11.1 (20)

Time Needed for Diagnosis: 300 — 700 seconds

GETtheMANUALS.org

AI: DTC P0131 O2 SENSOR CIRCUIT LOW VOLTAGE (BANK 1 SENSOR 1)

1. OUTLINE OF DIAGNOSIS

Detect the open or short circuit of sensor.
Judge as NG, when the element voltage is out of the specified range.

2. COMPONENT DESCRIPTION

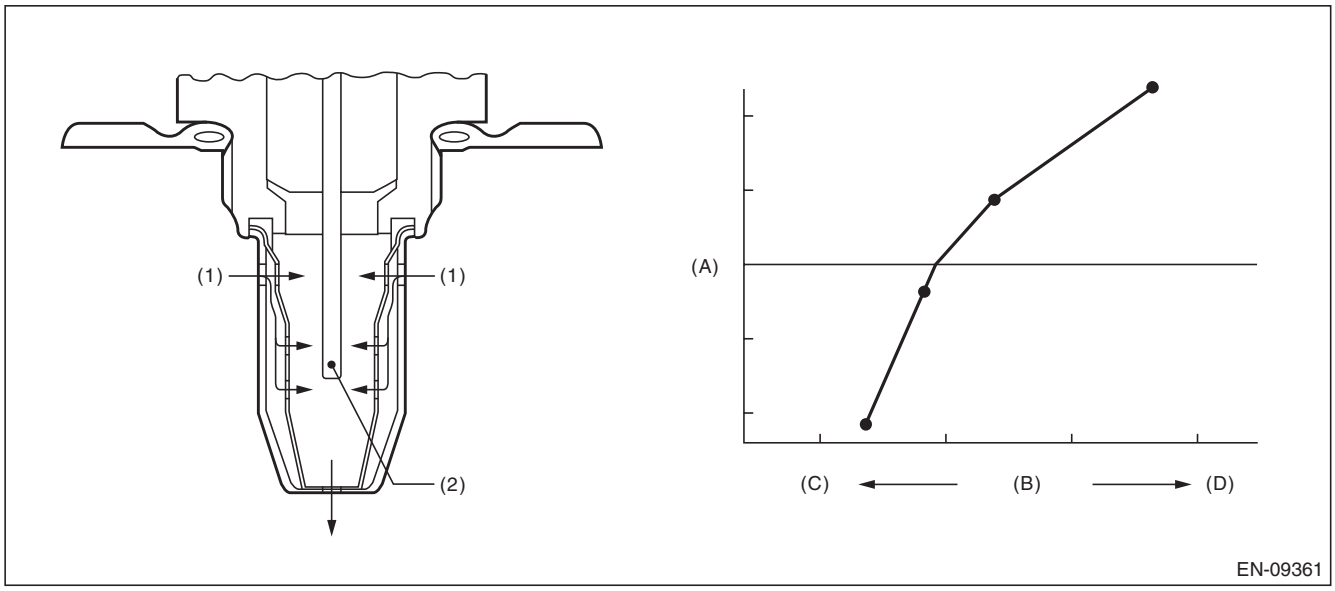

(A) Electromotive force (B) Air fuel ratio (C) Lean
(D) Rich

(1) Exhaust gas (2) ZrO_2

3. ENABLE CONDITION

Secondary Parameters	Enable Conditions
Battery voltage	≥ 10.9 V

4. GENERAL DRIVING CYCLE

Always perform the diagnosis continuously.

GETtheMANUALS.org

5. DIAGNOSTIC METHOD

- **Abnormality Judgment**

If the duration of time while the following conditions are met is longer than the time indicated, judge as NG.

Judgment Value

Malfunction Criteria	Threshold Value
Input voltage (+)	< 1.128 V
or	
Input voltage (–)	< 0.23 V
or	
|Input voltage (+) – Input voltage (–)|	< 0.644 V

Time Needed for Diagnosis:
Input voltage (+): 1000 ms
Input voltage (–): 1000 ms
|Input voltage (+) – Input voltage (–)|: 1000 ms
Malfunction Indicator Light Illumination: Illuminates as soon as a malfunction occurs.

- **Normality Judgment**

Judge as OK and clear the NG if the continuous time while the following conditions are established is more than the predetermined time.

Judgment Value

Malfunction Criteria	Threshold Value
Input voltage (+)	≥ 1.128 V
Input voltage (–)	≥ 0.23 V
|Input voltage (+) – Input voltage (–)|	≥ 0.644 V

Time Needed for Diagnosis: Less than 1 second

GETtheMANUALS.org

AJ:DTC P0132 O2 SENSOR CIRCUIT HIGH VOLTAGE (BANK 1 SENSOR 1)

1. OUTLINE OF DIAGNOSIS

Detect the open or short circuit of sensor.
Judge as NG, when the element voltage is out of the specified range.

2. COMPONENT DESCRIPTION

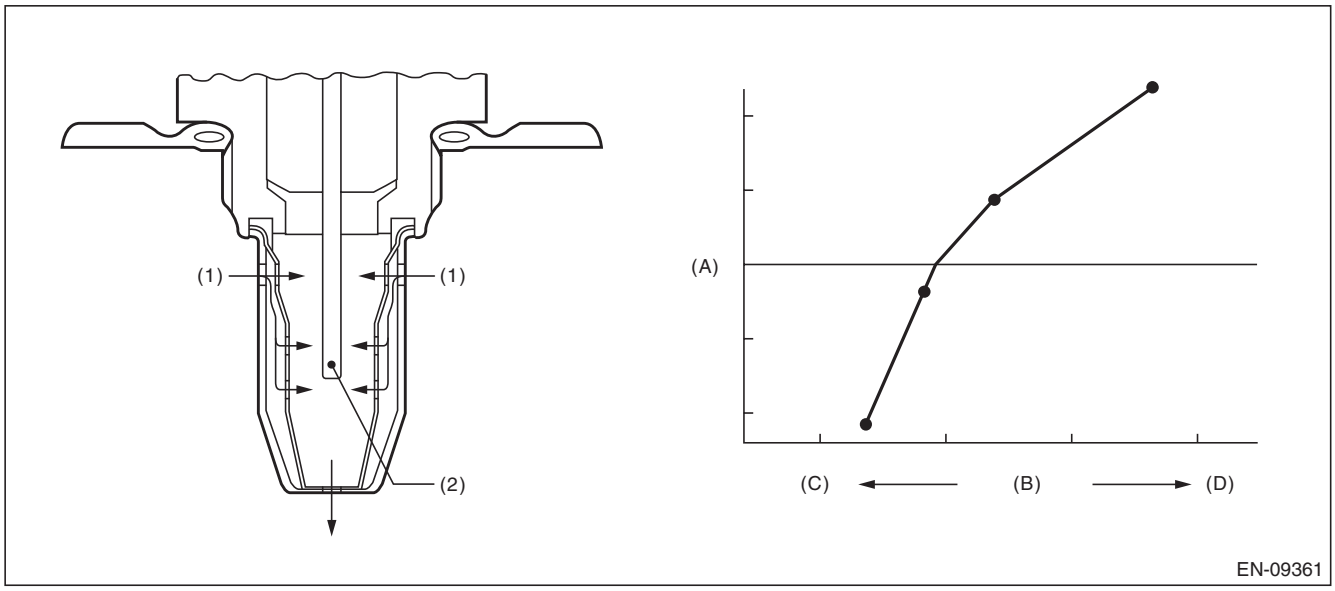

(A) Electromotive force (B) Air fuel ratio (C) Lean
(D) Rich

(1) Exhaust gas (2) ZrO_2

3. ENABLE CONDITION

Secondary Parameters	Enable Conditions
Battery voltage	≥ 10.9 V

4. GENERAL DRIVING CYCLE

Always perform the diagnosis continuously.

GETtheMANUALS.org

5. DIAGNOSTIC METHOD

- **Abnormality Judgment**

If the duration of time while the following conditions are met is longer than the time indicated, judge as NG.

Judgment Value

Malfunction Criteria	Threshold Value
Input voltage (+)	> 3.589 V
or	
Input voltage (–)	> 3.541 V

Time Needed for Diagnosis:
Input voltage (+): 1000 ms
Input voltage (–): 1000 ms
Malfunction Indicator Light Illumination: Illuminates as soon as a malfunction occurs.

- **Normality Judgment**

Judge as OK and clear the NG if the continuous time while the following conditions are established is more than the predetermined time.

Judgment Value

Malfunction Criteria	Threshold Value
Input voltage (+)	≤ 3.589 V
Input voltage (–)	≤ 3.541 V

Time Needed for Diagnosis: Less than 1 second

GETtheMANUALS.org

AK:DTC P0134 O2 SENSOR CIRCUIT NO ACTIVITY DETECTED (BANK 1 SENSOR 1)

1. OUTLINE OF DIAGNOSIS

Detect open circuits of the sensor.
Judge as NG when the impedance of the element is large.

2. COMPONENT DESCRIPTION

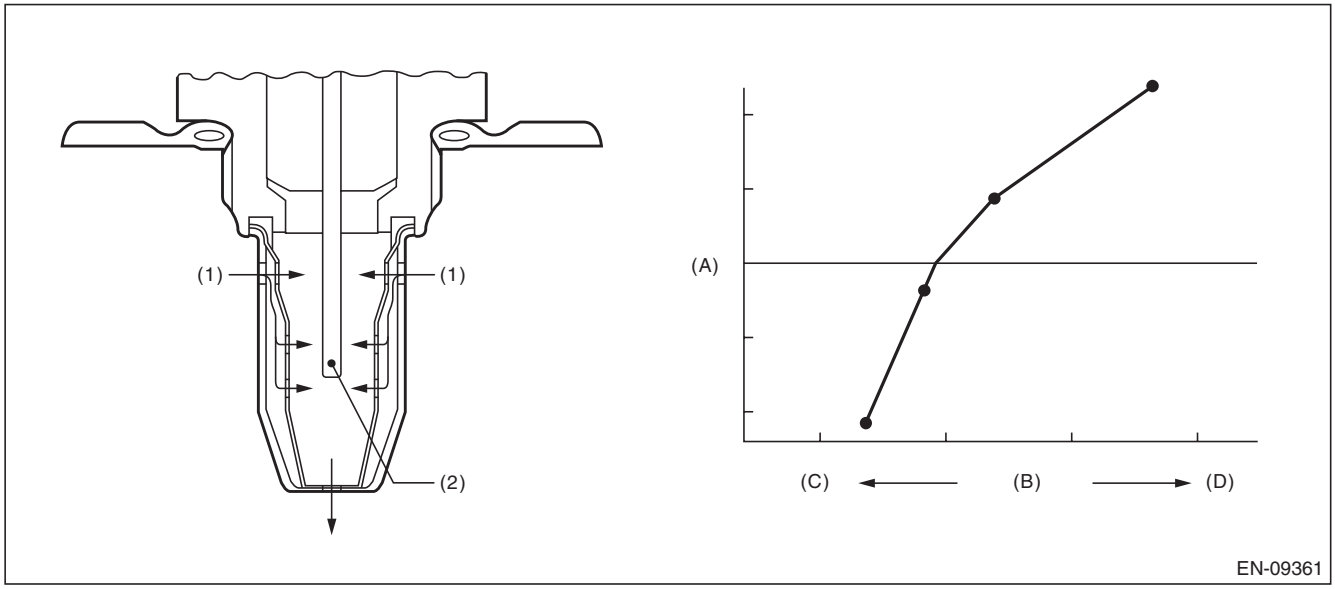

(A) Electromotive force (B) Air fuel ratio (C) Lean
(D) Rich

(1) Exhaust gas (2) ZrO_2

3. ENABLE CONDITION

Secondary Parameters	Enable Conditions
None	

4. GENERAL DRIVING CYCLE

Always perform the diagnosis continuously.

GETtheMANUALS.org

5. DIAGNOSTIC METHOD

- **Abnormality Judgment**

If the duration of time while the following conditions are met is longer than the time indicated, judge as NG.

Judgment Value

Malfunction Criteria	Threshold Value
Battery voltage	≥ 10.9 V
Time of heater control duty at 70 % or more	≥ 30000 ms
Front oxygen (A/F) sensor impedance.	> 500 Ω

Time Needed for Diagnosis: 5000 ms
Malfunction Indicator Light Illumination: Illuminates as soon as a malfunction occurs.

- **Normality Judgment**

Judge as OK and clear the NG if the continuous time while the following conditions are established is more than the predetermined time.

Judgment Value

Malfunction Criteria	Threshold Value
Battery voltage	≥ 10.9 V
Front oxygen (A/F) sensor impedance.	≤ 500 Ω

Time Needed for Diagnosis: Less than 1 second

GETtheMANUALS.org

AL:DTC P0137 O2 SENSOR CIRCUIT LOW VOLTAGE (BANK 1 SENSOR 2)

1. OUTLINE OF DIAGNOSIS

Detect continuity NG of the oxygen sensor. If the oxygen sensor voltage reading is not within the probable range considering the operating conditions, judge as NG.

2. COMPONENT DESCRIPTION

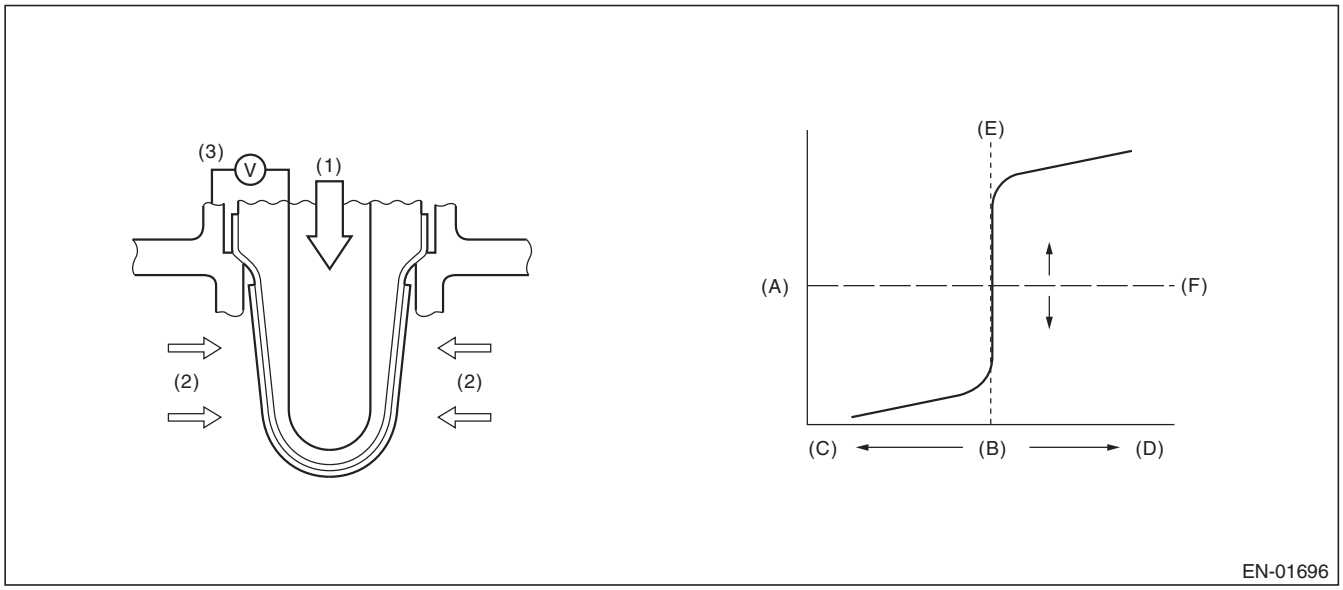

(A)	Electromotive force	(B)	Air fuel ratio	(C)	Rich
(D)	Lean	(E)	Theoretical air fuel ratio	(F)	Comparative voltage
(1)	Atmosphere	(2)	Exhaust gas	(3)	Electromotive force

GETtheMANUALS.org

3. ENABLE CONDITION

Used for abnormality judgment

Secondary Parameters	Enable Conditions
High	
Secondary air system	Not in operation
Closed loop control at the oxygen sensor	In operation
Misfire detection every 200 rotations	< 65535 time(s)
Front oxygen (A/F) sensor compensation coefficient	Not in limit value
Battery voltage	≥ 10.9 V
Engine coolant temperature	≥ 75 °C (167 °F)
Low (1)	
Secondary air system	Not in operation
Closed loop control at the oxygen sensor	In operation
Misfire detection every 200 rotations	< 65535 time(s)
Front oxygen (A/F) sensor compensation coefficient	Not in limit value
Battery voltage	≥ 10.9 V
Engine coolant temperature	≥ 75 °C (167 °F)
Amount of intake air	≥ 10 g/s (0.35 oz/s)
Low (2)	
Secondary air system	Not in operation
Closed loop control at the oxygen sensor	In operation
Misfire detection every 200 rotations	< 65535 time(s)
Front oxygen (A/F) sensor compensation coefficient	Not in limit value
Battery voltage	≥ 10.9 V
Engine coolant temperature	≥ 75 °C (167 °F)
Amount of intake air	< 10 g/s (0.35 oz/s)
Current continuation time of the rear oxygen sensor heater	≥ 25000 ms
Low (3)	
Secondary air system	Not in operation
Closed loop control at the oxygen sensor	In operation
Misfire detection every 200 rotations	< 65535 time(s)
Front oxygen (A/F) sensor compensation coefficient	Not in limit value
Battery voltage	≥ 10.9 V
Engine coolant temperature	≥ 75 °C (167 °F)
Amount of intake air	< 10 g/s (0.35 oz/s)
Current continuation time of the rear oxygen sensor heater	≥ 25000 ms
Fuel cut	Experienced

Used for normality judgment

Secondary Parameters	Enable Conditions
Secondary air system	Not in operation
Closed loop control at the oxygen sensor	In operation
Misfire detection every 200 rotations	< 65535 time(s)
Front oxygen (A/F) sensor compensation coefficient	Not in limit value
Battery voltage	≥ 10.9 V
Engine coolant temperature	≥ 75 °C (167 °F)

4. GENERAL DRIVING CYCLE

After starting the engine, continuously perform the diagnosis with the same engine condition.

GETtheMANUALS.org

5. DIAGNOSTIC METHOD

• Abnormality Judgment

If the duration of time while the following conditions are met is longer than the time indicated, judge as NG.

Judgment Value

Malfunction Criteria	Threshold Value	DTC
High		P0138
Sensor output voltage	> 1.2 V	P0158
Low		P0137
Sensor output voltage	< 0.03 V	P0157

Time Needed for Diagnosis:

High: 2500 ms
Low (1): 20000 ms
Low (2): 40000 ms
Low (3): Value from Map

Map

Fuel cut time (s)	0	2000	10000
Time Needed for Diagnosis (s)	40000	40000	60000

Malfunction Indicator Light Illumination: Illuminates when malfunction occurs in 2 continuous driving cycles.

• Normality Judgment

Judge as OK and clear the NG if the continuous time while the following conditions are established is more than the predetermined time.

Judgment Value

Malfunction Criteria	Threshold Value	DTC
High		P0138
Sensor output voltage	≤ 1.2 V	P0158
Low		P0137
Sensor output voltage	≥ 0.03 V	P0157

Time Needed for Diagnosis:

High: Less than 1 second
Low (1): Less than 1 second
Low (2): Less than 1 second
Low (3): Less than 1 second

GETtheMANUALS.org

AM:DTC P0138 O2 SENSOR CIRCUIT HIGH VOLTAGE (BANK 1 SENSOR 2)

1. OUTLINE OF DIAGNOSIS

NOTE:
For the detection standard, refer to DTC P0137. <Ref. to GD(H6DO)-72, DTC P0137 O2 SENSOR CIRCUIT LOW VOLTAGE (BANK 1 SENSOR 2), Diagnostic Trouble Code (DTC) Detecting Criteria.>

GETtheMANUALS.org

AN:DTC P013A O2 SENSOR SLOW RESPONSE - RICH TO LEAN (BANK 1 SENSOR 2)

1. OUTLINE OF DIAGNOSIS

Detect the slow response of rich → lean for rear oxygen sensor output.
When the deceleration fuel cut has occurred, detect the trouble by calculating the time when the rear oxygen sensor output passes through the predetermined range of voltages.
Judge as NG when the response time is larger than the threshold value.

2. COMPONENT DESCRIPTION

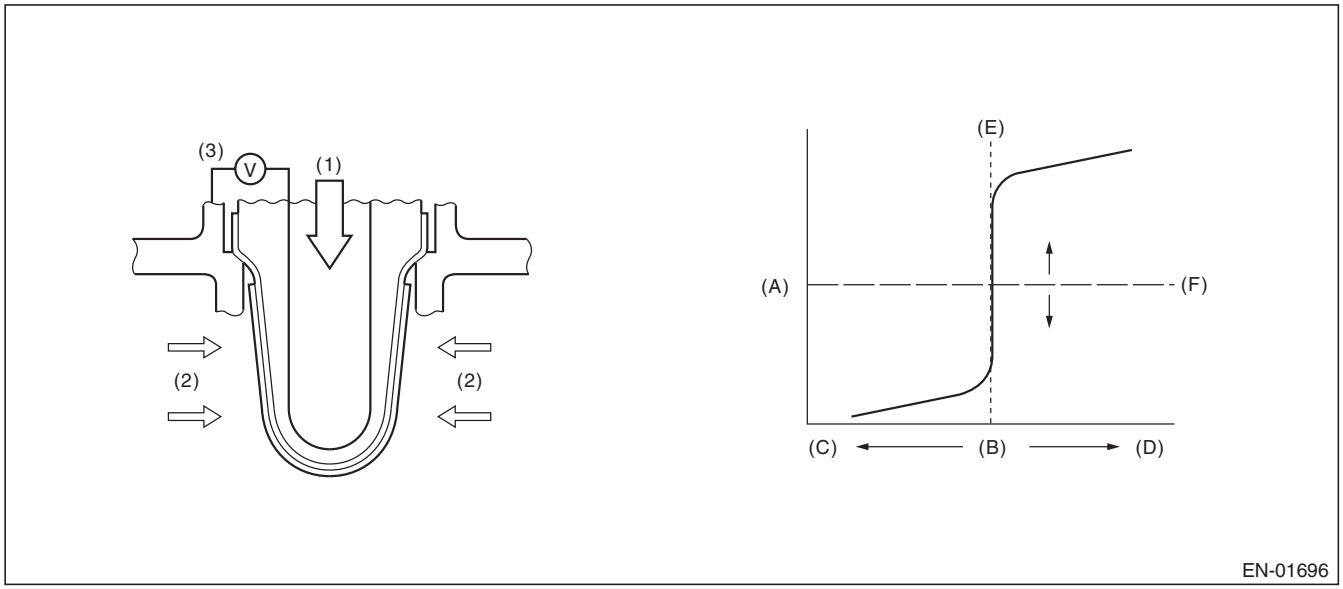

(A)	Electromotive force	(B)	Air fuel ratio	(C)	Rich
(D)	Lean	(E)	Theoretical air fuel ratio	(F)	Comparative voltage
(1)	Atmosphere	(2)	Exhaust gas	(3)	Electromotive force

3. ENABLE CONDITIONS

Secondary Parameters	Enable Conditions
Battery voltage	> 10.9 V
Rear oxygen sensor closed loop control	Operation
Current calculation time of the rear oxygen sensor heater after starting	≥ 180000 ms
Engine speed when fuel cut starts	≥ 1400 rpm
Rear oxygen sensor voltage when fuel cut starts	≥ 0.55 V
Fuel cut time	≥ 5000 ms
Engine coolant temperature when fuel cut starts	≥ 75 °C (167 °F)
Estimated temperature of rear oxygen sensor element when fuel cut starts	≥ 480 °C (896 °F)

4. GENERAL DRIVING CYCLE

Perform diagnosis once during deceleration fuel cut from a constant and high speed driving, when rear oxygen sensor is warmed up sufficiently.

GETtheMANUALS.org

5. DIAGNOSTIC METHOD

Detect the trouble by calculating the response time of the rear oxygen sensor during fuel cut.

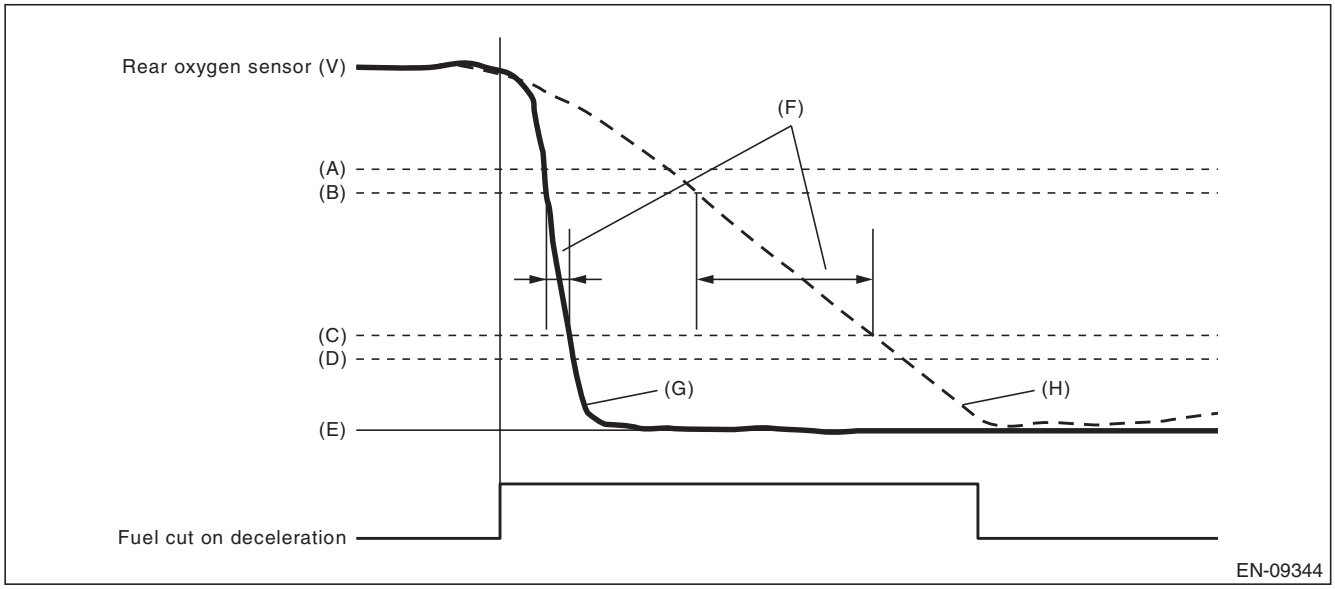

(A)	0.55 V	(B)	0.50 V	(C)	0.20 V
(D)	0.15 V	(E)	0 V	(F)	Diagnostic parameter
(G)	Normal	(H)	Malfunction		

- **Abnormality Judgment**

Judge as NG when the following conditions are established.

Judgment Value

Malfunction Criteria	Threshold Value
Time when rear oxygen sensor voltage changed from 0.5 V to 0.2 V.	> 491 ms

Time Needed for Diagnosis: 10 seconds

Malfunction Indicator Light Illumination: Illuminates when malfunction occurs in 2 continuous driving cycles.

- **Normality Judgment**

Judge as OK and clear the NG if the following conditions are established.

Judgment Value

Malfunction Criteria	Threshold Value
Time when rear oxygen sensor voltage changed from 0.5 V to 0.2 V.	≤ 491 ms

Time Needed for Diagnosis: 10 seconds

GETtheMANUALS.org

AO:DTC P013B O2 SENSOR SLOW RESPONSE - LEAN TO RICH (BANK 1 SENSOR 2)

1. OUTLINE OF DIAGNOSIS

Detect the slow response of lean → rich for rear oxygen sensor output.
After the deceleration fuel cut has occurred, detect the trouble by calculating the time when the rear oxygen sensor output passes through the predetermined range of voltages.
Judge as NG when the response time is larger than the threshold value.

2. COMPONENT DESCRIPTION

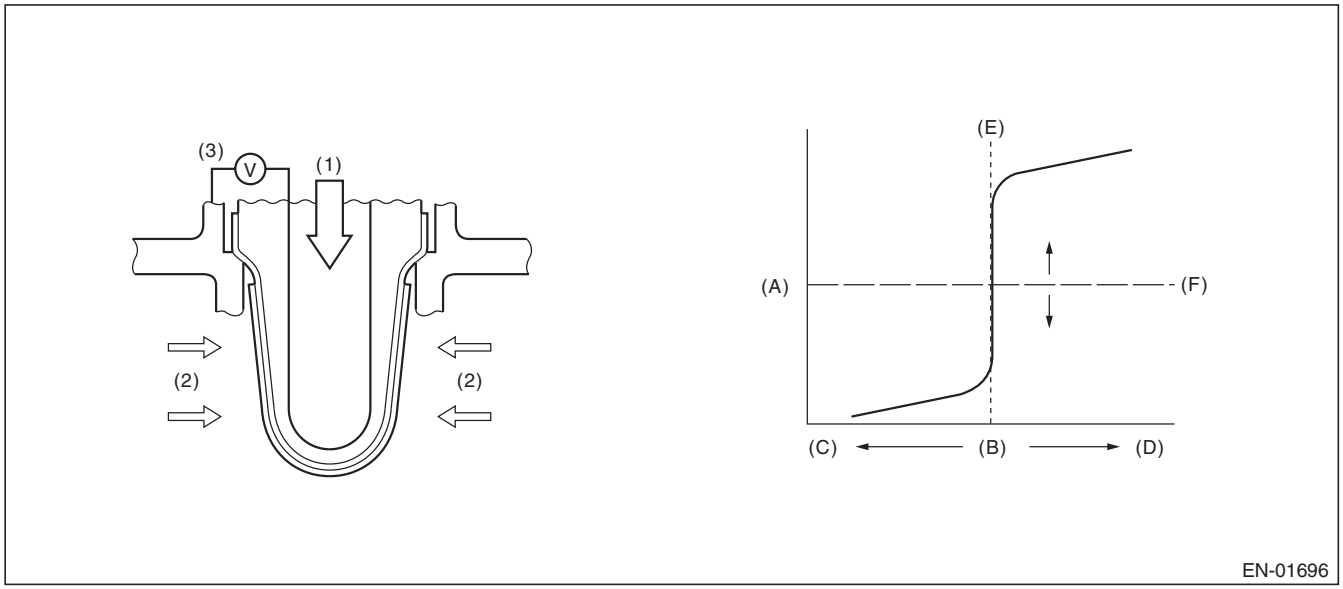

(A)	Electromotive force	(B)	Air fuel ratio	(C)	Rich
(D)	Lean	(E)	Theoretical air fuel ratio	(F)	Comparative voltage
(1)	Atmosphere	(2)	Exhaust gas	(3)	Electromotive force

3. ENABLE CONDITIONS

Secondary Parameters	Enable Conditions
Battery voltage	> 10.9 V
Rear oxygen sensor closed loop control	Operation
Fuel cut time	≥ 5000 ms

4. GENERAL DRIVING CYCLE

Perform diagnosis only once after recovering from a deceleration fuel cut continued for more than predetermined time.

GETtheMANUALS.org

5. DIAGNOSTIC METHOD

Detect the trouble by calculating the response time of the rear oxygen sensor after fuel cut.

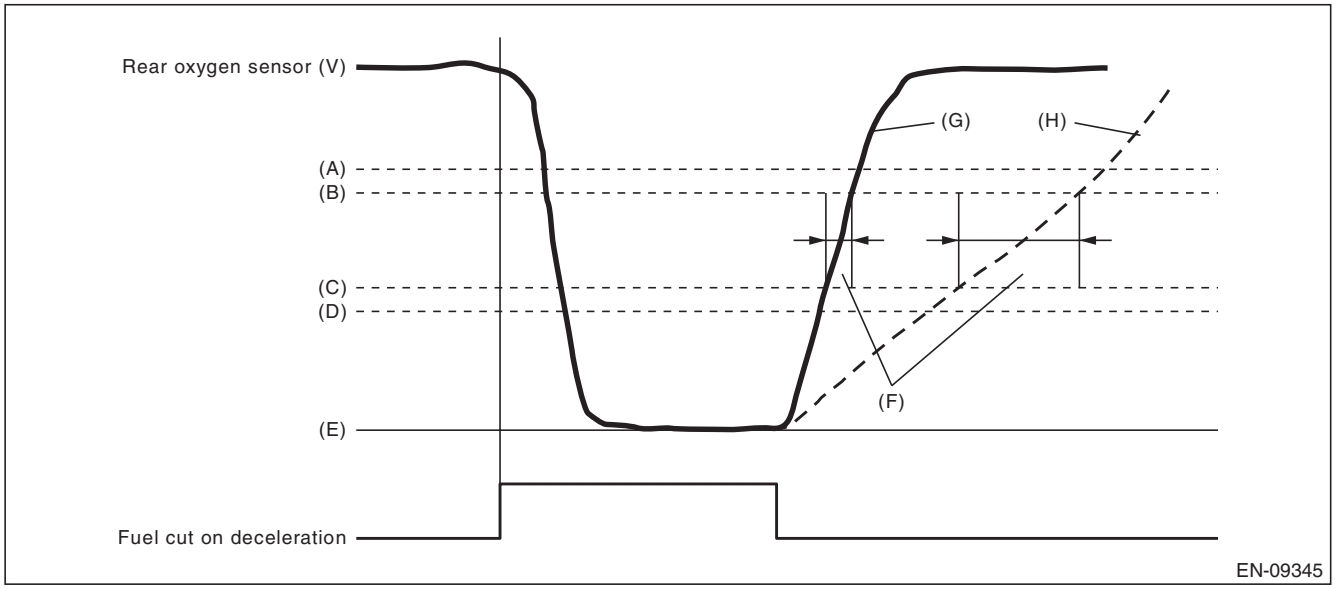

(A)	0.55 V	(B)	0.50 V	(C)	0.30 V
(D)	0.25 V	(E)	0 V	(F)	Diagnostic parameter
(G)	Normal	(H)	Malfunction		

- **Abnormality Judgment**

Judge as NG when the following conditions are established.

Judgment Value

Malfunction Criteria	Threshold Value
Time when rear oxygen sensor voltage changed from 0.3 V to 0.5 V.	> 4000 ms

Time Needed for Diagnosis: 10 seconds

Malfunction Indicator Light Illumination: Illuminates when malfunction occurs in 2 continuous driving cycles.

- **Normality Judgment**

Judge as OK and clear the NG if the following conditions are established.

Judgment Value

Malfunction Criteria	Threshold Value
Time when rear oxygen sensor voltage changed from 0.3 V to 0.5 V.	≤ 4000 ms

Time Needed for Diagnosis: 10 seconds

GETtheMANUALS.org

AP:DTC P013C O2 SENSOR SLOW RESPONSE - RICH TO LEAN (BANK 2 SENSOR 2)

1. OUTLINE OF DIAGNOSIS

NOTE:
For the detection standard, refer to DTC P013A. <Ref. to GD(H6DO)-76, DTC P013A O2 SENSOR SLOW RESPONSE - RICH TO LEAN (BANK 1 SENSOR 2), Diagnostic Trouble Code (DTC) Detecting Criteria.>

AQ:DTC P013D O2 SENSOR SLOW RESPONSE - LEAN TO RICH (BANK 2 SENSOR 2)

1. OUTLINE OF DIAGNOSIS

NOTE:
For the detection standard, refer to DTC P013B. <Ref. to GD(H6DO)-78, DTC P013B O2 SENSOR SLOW RESPONSE - LEAN TO RICH (BANK 1 SENSOR 2), Diagnostic Trouble Code (DTC) Detecting Criteria.>

GETtheMANUALS.org

AR:DTC P013E O2 SENSOR DELAYED RESPONSE - RICH TO LEAN (BANK 1 SENSOR 2)

1. OUTLINE OF DIAGNOSIS

Detect the delayed response of rear oxygen sensor output for rich → lean.
After the deceleration fuel cut has started, detect the trouble by calculating the time when the rear oxygen sensor output decreases to the predetermined voltages.
Judge as NG when the response time is larger than the threshold value.

2. COMPONENT DESCRIPTION

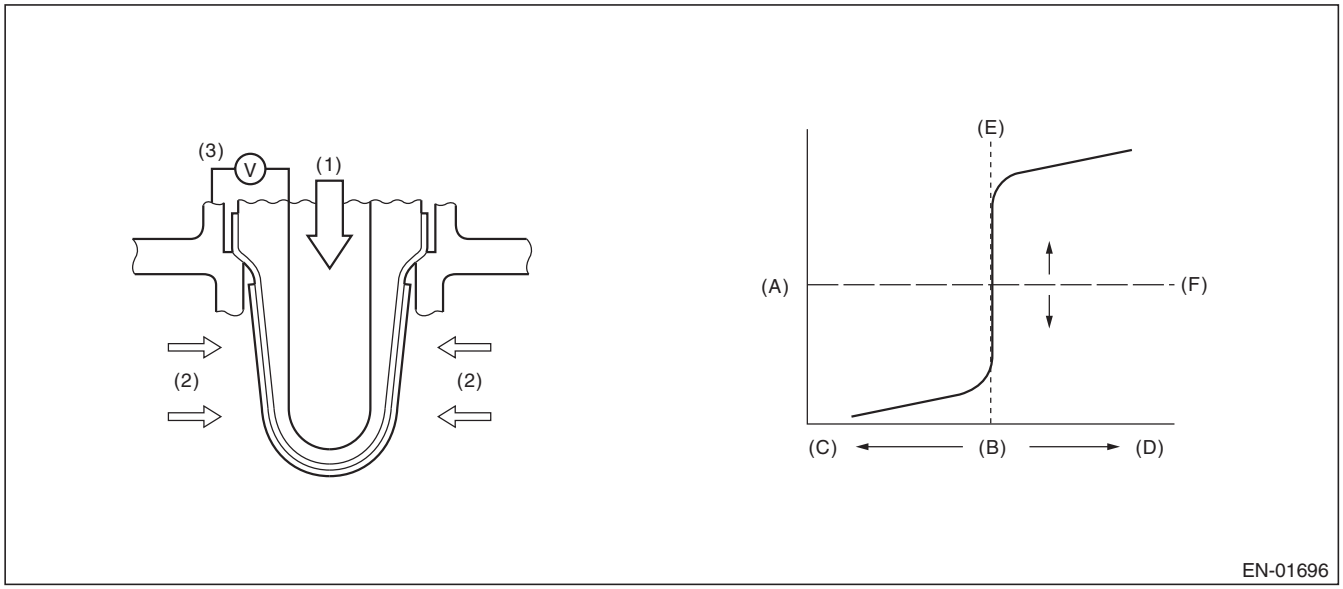

(A)	Electromotive force	(B)	Air fuel ratio	(C)	Rich
(D)	Lean	(E)	Theoretical air fuel ratio	(F)	Comparative voltage
(1)	Atmosphere	(2)	Exhaust gas	(3)	Electromotive force

3. ENABLE CONDITIONS

Secondary Parameters	Enable Conditions
Battery voltage	> 10.9 V
Rear oxygen sensor closed loop control	Operation
Engine speed when fuel cut starts	≥ 1400 rpm
Rear oxygen sensor voltage when fuel cut starts	≥ 0.55 V
Fuel cut time	≥ 5000 ms
Engine coolant temperature when fuel cut starts	≥ 75 °C (167 °F)
Estimated temperature of rear oxygen sensor element when fuel cut starts	≥ 480 °C (896 °F)

4. GENERAL DRIVING CYCLE

Perform diagnosis once during deceleration fuel cut from a constant and high speed driving, when rear oxygen sensor is warmed up sufficiently.

GETtheMANUALS.org

5. DIAGNOSTIC METHOD

Detect the trouble by calculating the time from the beginning of the fuel cut to the beginning of the rear oxygen sensor voltage starting to drop.

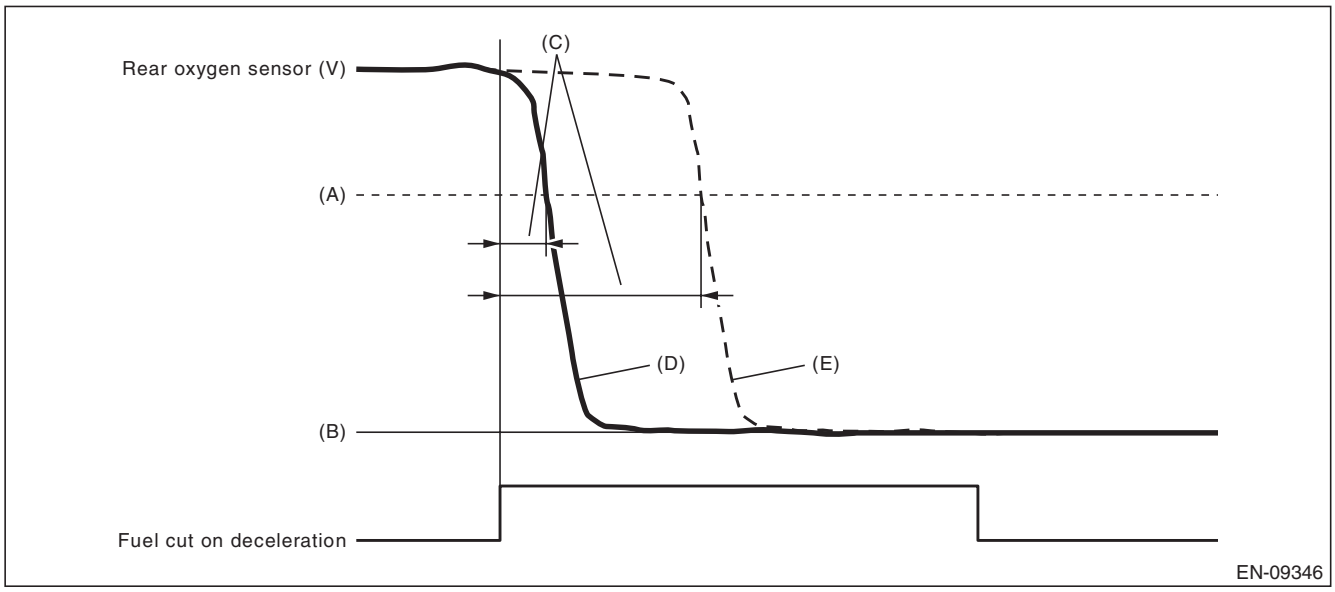

(A) 0.5 V (B) 0 V (C) Diagnostic parameter
(D) Normal (E) Malfunction

- **Abnormality Judgment**

Judge as NG when the following conditions are established.

Judgment Value

Malfunction Criteria	Threshold Value
Time when rear oxygen sensor voltage changed to 0.5 V after the fuel cut started.	> 4000 ms

Time Needed for Diagnosis: 10 seconds
Malfunction Indicator Light Illumination: Illuminates when malfunction occurs in 2 continuous driving cycles.

- **Normality Judgment**

Judge as OK and clear the NG if the following conditions are established.

Judgment Value

Malfunction Criteria	Threshold Value
Time when rear oxygen sensor voltage changed to 0.5 V after the fuel cut started.	≤ 4000 ms

Time Needed for Diagnosis: 10 seconds

GETthemANUALS.org

AS:DTC P013F O2 SENSOR DELAYED RESPONSE - LEAN TO RICH (BANK 1 SENSOR 2)

1. OUTLINE OF DIAGNOSIS

Detect the delayed response of rear oxygen sensor output for lean → rich.
After the deceleration fuel cut has completed, detect the trouble by calculating the time when the rear oxygen sensor output increases to the predetermined voltages.
Judge as NG when the response time is larger than the threshold value.

2. COMPONENT DESCRIPTION

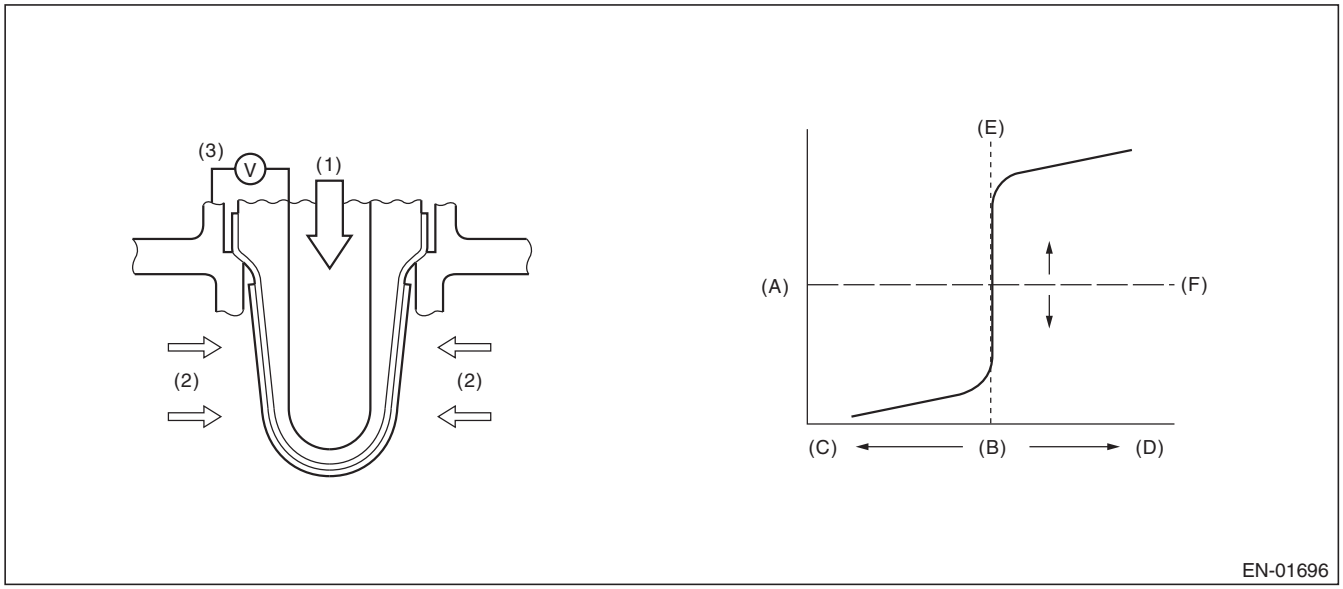

(A)	Electromotive force	(B)	Air fuel ratio	(C)	Rich
(D)	Lean	(E)	Theoretical air fuel ratio	(F)	Comparative voltage
(1)	Atmosphere	(2)	Exhaust gas	(3)	Electromotive force

3. ENABLE CONDITIONS

Secondary Parameters	Enable Conditions
Battery voltage	> 10.9 V
Rear oxygen sensor closed loop control	Operation
Engine speed	≥ 500 rpm
Rear oxygen sensor voltage when fuel cut has completed	< 0.15 V
Fuel cut time	≥ 5000 ms
Engine coolant temperature when fuel cut has completed	≥ 75 °C (167 °F)
Estimated element temperature of rear oxygen sensor when fuel cut has completed	≥ 480 °C (896 °F)

4. GENERAL DRIVING CYCLE

Perform diagnosis only once when recovering from the deceleration fuel cut continued for more than predetermined time with the rear oxygen sensor warmed up sufficiently.

GETtheMANUALS.org

5. DIAGNOSTIC METHOD

Detect the trouble by calculating the time from the completion of the fuel cut to the beginning of the rear oxygen sensor voltage starting to rise.

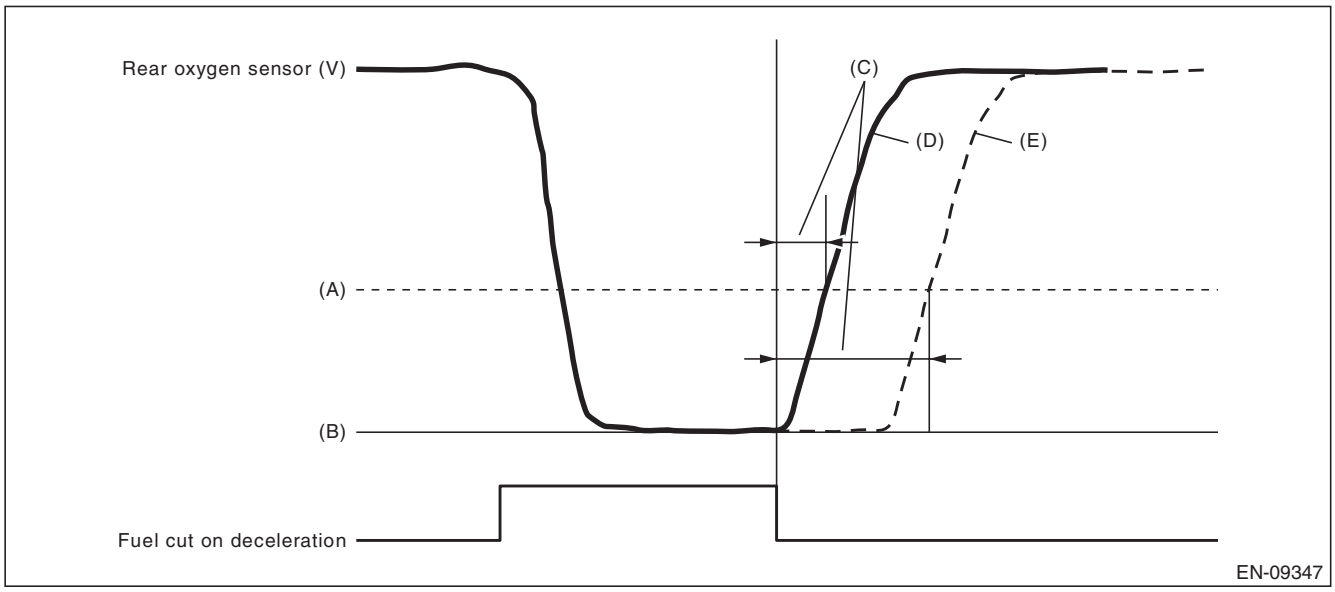

(A) 0.3 V (B) 0 V (C) Diagnostic parameter
(D) Normal (E) Malfunction

- **Abnormality Judgment**

Judge as NG when the following conditions are established.

Judgment Value

Malfunction Criteria	Threshold Value
The number of times that the rear oxygen sensor voltage changed to 0.3 V after the fuel cut has completed (time counter)	> 3750 time(s)

Time Needed for Diagnosis: 10 seconds
Malfunction Indicator Light Illumination: Illuminates when malfunction occurs in 2 continuous driving cycles.

- **Normality Judgment**

Judge as OK and clear the NG if the following conditions are established.

Judgment Value

Malfunction Criteria	Threshold Value
The number of times that the rear oxygen sensor voltage changed to 0.3 V after the fuel cut has completed (time counter)	≤ 3750 time(s)

Time Needed for Diagnosis: 10 seconds

GETtheMANUALS.org

AT:DTC P0140 O2 SENSOR CIRCUIT NO ACTIVITY DETECTED (BANK1 SENSOR2)

1. OUTLINE OF DIAGNOSIS

Detect the rear oxygen sensor open or short circuit. Judge as NG when the rear oxygen sensor voltage can be determined to be abnormal considering conditions such as intake air amount, engine coolant temperature, main feedback control and deceleration fuel cut.

2. COMPONENT DESCRIPTION

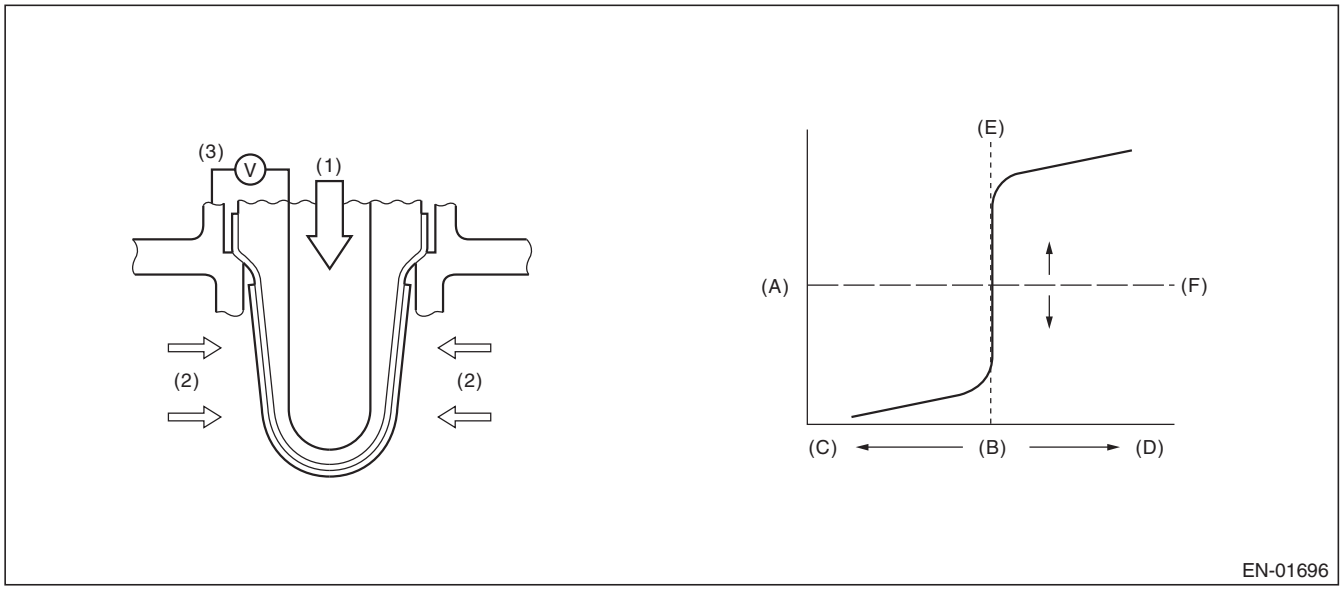

(A)	Electromotive force	(B)	Air fuel ratio	(C)	Rich
(D)	Lean	(E)	Theoretical air fuel ratio	(F)	Comparative voltage
(1)	Atmosphere	(2)	Exhaust gas	(3)	Electromotive force

3. ENABLE CONDITION (USED ONLY FOR MALFUNCTION JUDGMENT)

Secondary Parameters	Enable Conditions
Closed loop control at the rear oxygen sensor	In operation
Target output voltage of rear oxygen sensor	≥ 0.55 V + 0.05 V
Amount of intake air	≥ 10 g/s (0.35 oz/s)
Engine coolant temperature	≥ 75 °C (167 °F)
Misfire detection every 200 rotations	< 65535 time(s)
Front oxygen (A/F) sensor compensation coefficient	Not in limit value
Battery voltage	≥ 10.9 V
Deceleration fuel cut of 5000 ms or more.	Experienced

4. GENERAL DRIVING CYCLE

Perform the diagnosis once after starting the engine.

GETthemANUALS.org

5. DIAGNOSTIC METHOD

- **Abnormality Judgment**

If the duration of time while the following conditions are met is longer than the time indicated, judge as NG.

Judgment Value

Malfunction Criteria	Threshold Value
Minimum output voltage or Maximum output voltage	> 0.15 V < 0.55 V

Time Needed for Diagnosis: 200000 ms
Malfunction Indicator Light Illumination: Illuminates when malfunction occurs in 2 continuous driving cycles.

- **Normality Judgment**

Judge as OK and clear the NG if the following conditions are established.

Judgment Value

Malfunction Criteria	Threshold Value
Diagnosis of the rear oxygen sensor voltage low side	Incomplete
Minimum output voltage	≤ 0.15 V
Maximum output voltage	≥ 0.55 V

GETtheMANUALS.org

AU:DTC P0141 O2 SENSOR HEATER CIRCUIT (BANK1 SENSOR2)

1. OUTLINE OF DIAGNOSIS

Detect the malfunction of rear oxygen sensor heater.
While observing the engine condition, judge as NG if the rear oxygen sensor impedance is great.

2. COMPONENT DESCRIPTION

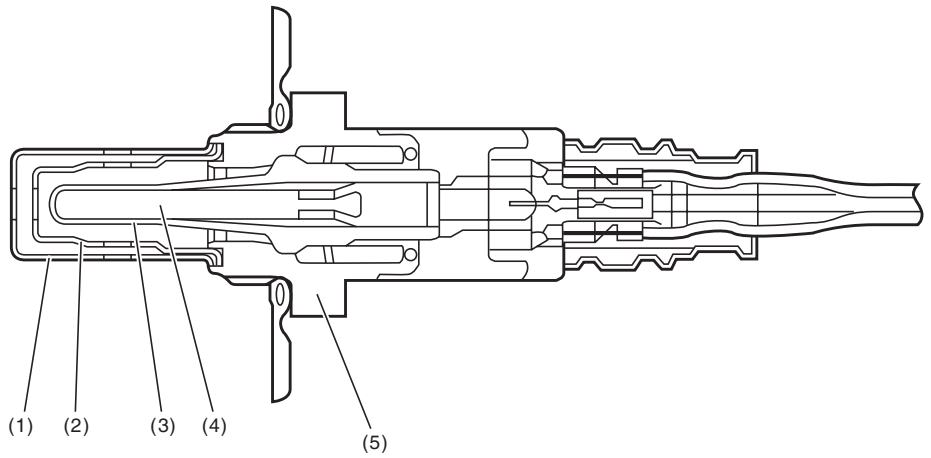

(1) Element cover (outer)
(2) Element cover (inner)
(3) Sensor element
(4) Ceramic heater
(5) Sensor housing

3. ENABLE CONDITIONS

Secondary Parameters	Enable Conditions
Battery voltage	≥ 10.9 V
Elapsed time after starting the engine	≥ 1000 ms
Engine coolant temperature	≥ 75 °C (167 °F)
A/F sensor element impedance	≤ 50 Ω
A/F sensor heater control duty	≤ 75 %
Rear oxygen sensor heater control duty	< 70 %

4. GENERAL DRIVING CYCLE

Perform the diagnosis continuously 1000 ms or more after starting the engine.

GETtheMANUALS.org

5. DIAGNOSTIC METHOD

- **Abnormality Judgment**

If the duration of time while the following conditions are met is longer than the time indicated, judge as NG.

Judgment Value

Malfunction Criteria	Threshold Value
Output terminal for heater characteristics failure detection	Low

Time Needed for Diagnosis: 4 ms × 2500 time(s)
Malfunction Indicator Light Illumination: Illuminates when malfunction occurs in 2 continuous driving cycles.

- **Normality Judgment**

Judge as OK and clear the NG if the continuous time while the following conditions are established is more than the predetermined time.

Judgment Value

Malfunction Criteria	Threshold Value
Output terminal for heater characteristics failure detection	High

Time Needed for Diagnosis: 4 ms × 2500 time(s)

GETtheMANUALS.org

AV:DTC P014A O2 SENSOR DELAYED RESPONSE - RICH TO LEAN (BANK 2 SENSOR 2)

1. OUTLINE OF DIAGNOSIS

NOTE:
For the detection standard, refer to DTC P013E. <Ref. to GD(H6DO)-81, DTC P013E O2 SENSOR DELAYED RESPONSE - RICH TO LEAN (BANK 1 SENSOR 2), Diagnostic Trouble Code (DTC) Detecting Criteria.>

AW:DTC P014B O2 SENSOR DELAYED RESPONSE - LEAN TO RICH (BANK 2 SENSOR 2)

1. OUTLINE OF DIAGNOSIS

NOTE:
For the detection standard, refer to DTC P013F. <Ref. to GD(H6DO)-83, DTC P013F O2 SENSOR DELAYED RESPONSE - LEAN TO RICH (BANK 1 SENSOR 2), Diagnostic Trouble Code (DTC) Detecting Criteria.>

GETtheMANUALS.org

AX:DTC P014C O2 SENSOR SLOW RESPONSE - RICH TO LEAN (BANK 1 SENSOR 1)

1. OUTLINE OF DIAGNOSIS

Detect the slow response of front oxygen (A/F) sensor.
For diagnosis, detect the trouble by processing the λ waveform in normal driving without forcibly changing the target air fuel ratio.

2. COMPONENT DESCRIPTION

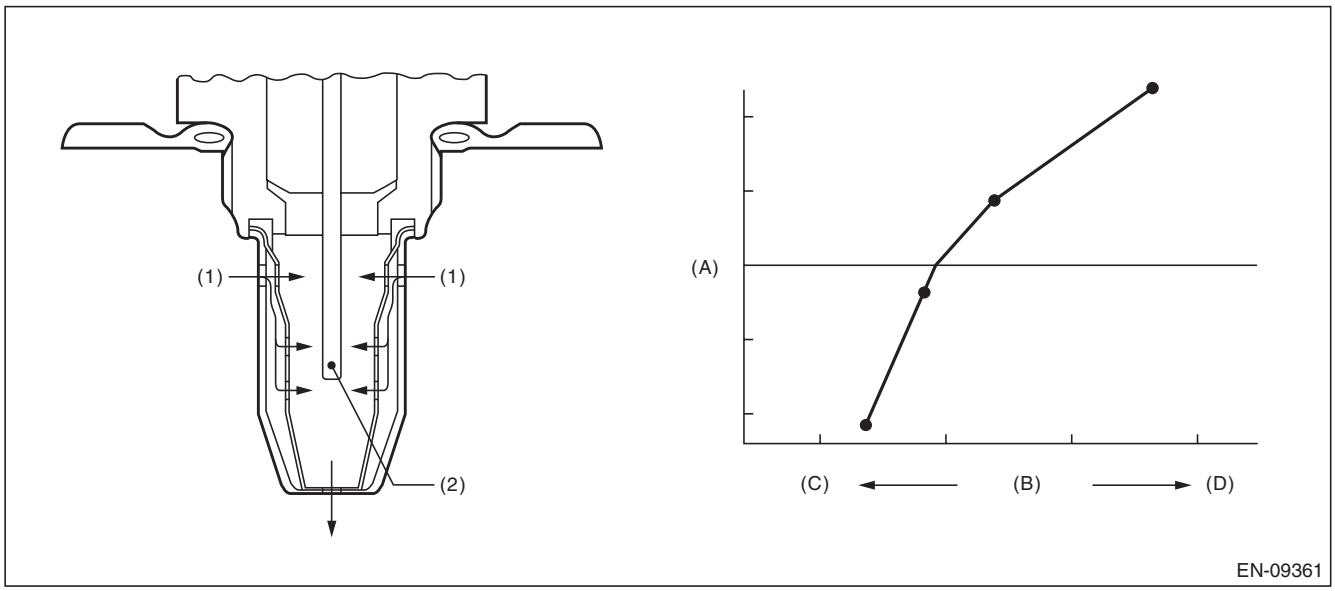

(A) Electromotive force (B) Air fuel ratio (C) Lean
(D) Rich

(1) Exhaust gas (2) ZrO_2

3. ENABLE CONDITIONS

Secondary Parameters	Enable Conditions
Battery voltage	> 10.9 V
Closed loop control with main feedback	Operation
Front oxygen (A/F) sensor impedance	≥ 0 Ω and < 50 Ω
Elapsed time after starting the engine	≥ 40000 ms
Engine coolant temperature	≥ 0 °C (32 °F)
Engine speed	≥ 1000 rpm
Amount of intake air	≥ 10 g/s (0.35 oz/s)
After fuel cut	≥ 3000 ms
Learning value of EVAP conc. during purge	< 0.2
Total time of operating canister purge	≥ 20 s
Engine load change	< 0.02 g/rev (0 oz/rev)
Idle switch	OFF

4. GENERAL DRIVING CYCLE

Perform diagnosis only once in a city driving including normal acceleration and deceleration.

GETtheMANUALS.org

5. DIAGNOSTIC METHOD 1

Detect the malfunction by checking “Cumulative value of time when λ changes from lean → rich” in comparison to “Time during which diagnosis is in progress”.

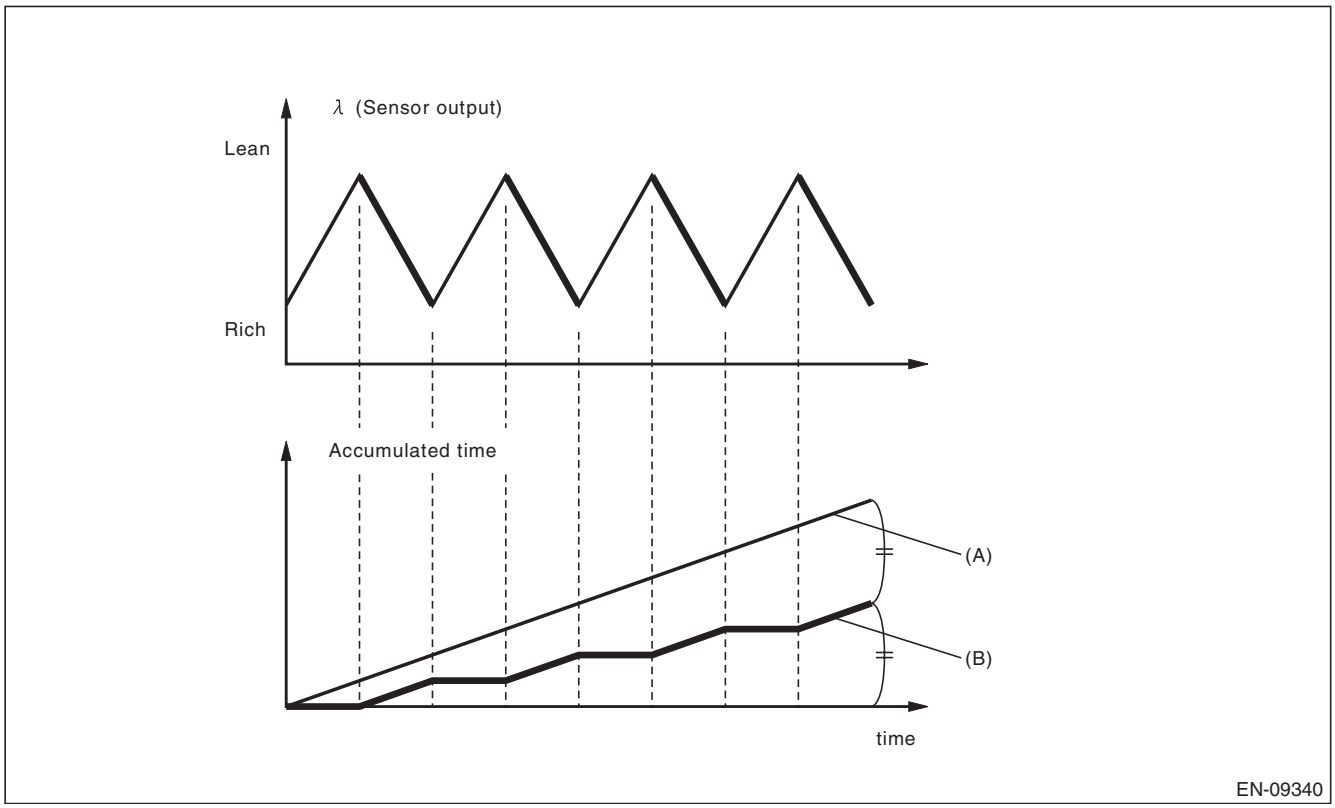

(A) Time during which diagnosis is in progress

(B) Cumulative value of time when λ changes from lean → rich

- **Abnormality Judgment**

Judge as NG when the following conditions are established.

Judgment Value

Malfunction Criteria	Threshold Value	DTC
(Cumulative value of time when λ changes from lean → rich) / (Time during which diagnosis is in progress)	< 0.4 (Bin5 model) < 0.38 (ULEV model)	P014C P014E
	> 0.68 (Bin5 model) > 0.7 (ULEV model)	P014D P014F

Time Needed for Diagnosis: 90 seconds

Malfunction Indicator Light Illumination: Illuminates when malfunction occurs in 2 continuous driving cycles.

- **Normality Judgment**

Judge as OK and clear the NG if the following conditions are established.

Judgment Value

Malfunction Criteria	Threshold Value	DTC
(Cumulative value of time when λ changes from lean → rich) / (Time during which diagnosis is in progress)	≥ 0.4 (Bin5 model) ≥ 0.38 (ULEV model)	P014C P014E
	≤ 0.68 (Bin5 model) ≤ 0.7 (ULEV model)	P014D P014F

Time Needed for Diagnosis: 90 seconds

GETtheMANUALS.org

6. DIAGNOSTIC METHOD 2

Detect the malfunction by the cumulative value obtained from the amount of variation in λ change.

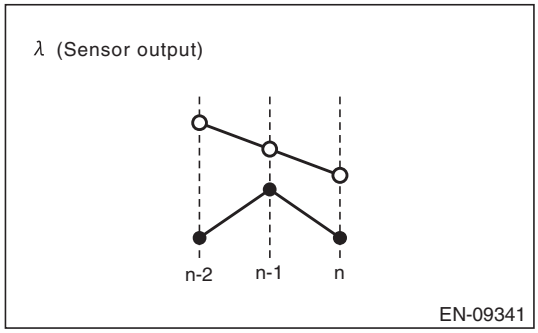

- **Abnormality Judgment**

Judge as NG when the following conditions are established.

Judgment Value

Malfunction Criteria	Threshold Value	DTC
Cumulative value obtained from the amount of variation in λ change Σ |(lambda(n) – lambda(n-1)) – (lambda(n-1) – lambda(n-2))|	< Value from Map	P014C, P014D, P014E and P014F

Map (Bin5 model)

Cumulative value obtained from the amount of variation in λ Σ |lambda(n) – lambda(n-1)|	0.30	2.00
Cumulative value obtained from the amount of variation in λ change	0.80	1.50

Map (ULEV model)

Cumulative value obtained from the amount of variation in λ Σ |lambda(n) – lambda(n-1)|	0.30	1.20
Cumulative value obtained from the amount of variation in λ change	0.80	1.00

Time Needed for Diagnosis: 90 seconds
Malfunction Indicator Light Illumination: Illuminates when malfunction occurs in 2 continuous driving cycles.

- **Normality Judgment**

Judge as OK and clear the NG if the following conditions are established.

Judgment Value

Malfunction Criteria	Threshold Value	DTC
Cumulative value obtained from the amount of variation in λ change Σ |(lambda(n) – lambda(n-1)) – (lambda(n-1) – lambda(n-2))|	≥ Value from Map	P014C, P014D, P014E and P014F

Time Needed for Diagnosis: 90 seconds

GETtheMANUALS.org

AY:DTC P014D O2 SENSOR SLOW RESPONSE - LEAN TO RICH (BANK 1 SENSOR 1)

1. OUTLINE OF DIAGNOSIS

NOTE:
For the detection standard, refer to DTC P014C. <Ref. to GD(H6DO)-90, DTC P014C O2 SENSOR SLOW RESPONSE - RICH TO LEAN (BANK 1 SENSOR 1), Diagnostic Trouble Code (DTC) Detecting Criteria.>

AZ:DTC P014E O2 SENSOR SLOW RESPONSE - RICH TO LEAN (BANK 2 SENSOR 1)

1. OUTLINE OF DIAGNOSIS

NOTE:
For the detection standard, refer to DTC P014C. <Ref. to GD(H6DO)-90, DTC P014C O2 SENSOR SLOW RESPONSE - RICH TO LEAN (BANK 1 SENSOR 1), Diagnostic Trouble Code (DTC) Detecting Criteria.>

BA:DTC P014F O2 SENSOR SLOW RESPONSE - LEAN TO RICH (BANK 2 SENSOR 1)

1. OUTLINE OF DIAGNOSIS

NOTE:
For the detection standard, refer to DTC P014C. <Ref. to GD(H6DO)-90, DTC P014C O2 SENSOR SLOW RESPONSE - RICH TO LEAN (BANK 1 SENSOR 1), Diagnostic Trouble Code (DTC) Detecting Criteria.>

BB:DTC P0151 O2 SENSOR CIRCUIT LOW VOLTAGE (BANK 2 SENSOR 1)

1. OUTLINE OF DIAGNOSIS

NOTE:
For the detection standard, refer to DTC P0131. <Ref. to GD(H6DO)-66, DTC P0131 O2 SENSOR CIRCUIT LOW VOLTAGE (BANK 1 SENSOR 1), Diagnostic Trouble Code (DTC) Detecting Criteria.>

BC:DTC P0152 O2 SENSOR CIRCUIT HIGH VOLTAGE (BANK 2 SENSOR 1)

1. OUTLINE OF DIAGNOSIS

NOTE:
For the detection standard, refer to DTC P0132. <Ref. to GD(H6DO)-68, DTC P0132 O2 SENSOR CIRCUIT HIGH VOLTAGE (BANK 1 SENSOR 1), Diagnostic Trouble Code (DTC) Detecting Criteria.>

BD:DTC P0154 O2 SENSOR CIRCUIT NO ACTIVITY DETECTED (BANK 2 SENSOR 1)

1. OUTLINE OF DIAGNOSIS

NOTE:
For the detection standard, refer to DTC P0134. <Ref. to GD(H6DO)-70, DTC P0134 O2 SENSOR CIRCUIT NO ACTIVITY DETECTED (BANK 1 SENSOR 1), Diagnostic Trouble Code (DTC) Detecting Criteria.>

BE:DTC P0157 O2 SENSOR CIRCUIT LOW VOLTAGE (BANK 2 SENSOR 2)

1. OUTLINE OF DIAGNOSIS

NOTE:
For the detection standard, refer to DTC P0137. <Ref. to GD(H6DO)-72, DTC P0137 O2 SENSOR CIRCUIT LOW VOLTAGE (BANK 1 SENSOR 2), Diagnostic Trouble Code (DTC) Detecting Criteria.>

GETtheMANUALS.org

BF:DTC P0158 O2 SENSOR CIRCUIT HIGH VOLTAGE (BANK 2 SENSOR 2)

1. OUTLINE OF DIAGNOSIS

NOTE:
For the detection standard, refer to DTC P0137. <Ref. to GD(H6DO)-72, DTC P0137 O2 SENSOR CIRCUIT LOW VOLTAGE (BANK 1 SENSOR 2), Diagnostic Trouble Code (DTC) Detecting Criteria.>

GETtheMANUALS.org

BG:DTC P015A O2 SENSOR DELAYED RESPONSE - RICH TO LEAN (BANK 1 SENSOR 1)

1. OUTLINE OF DIAGNOSIS

Detect the slow response of front oxygen (A/F) sensor.
For diagnosis, detect the trouble by processing the λ waveform in normal driving without forcibly changing the target air fuel ratio.

2. COMPONENT DESCRIPTION

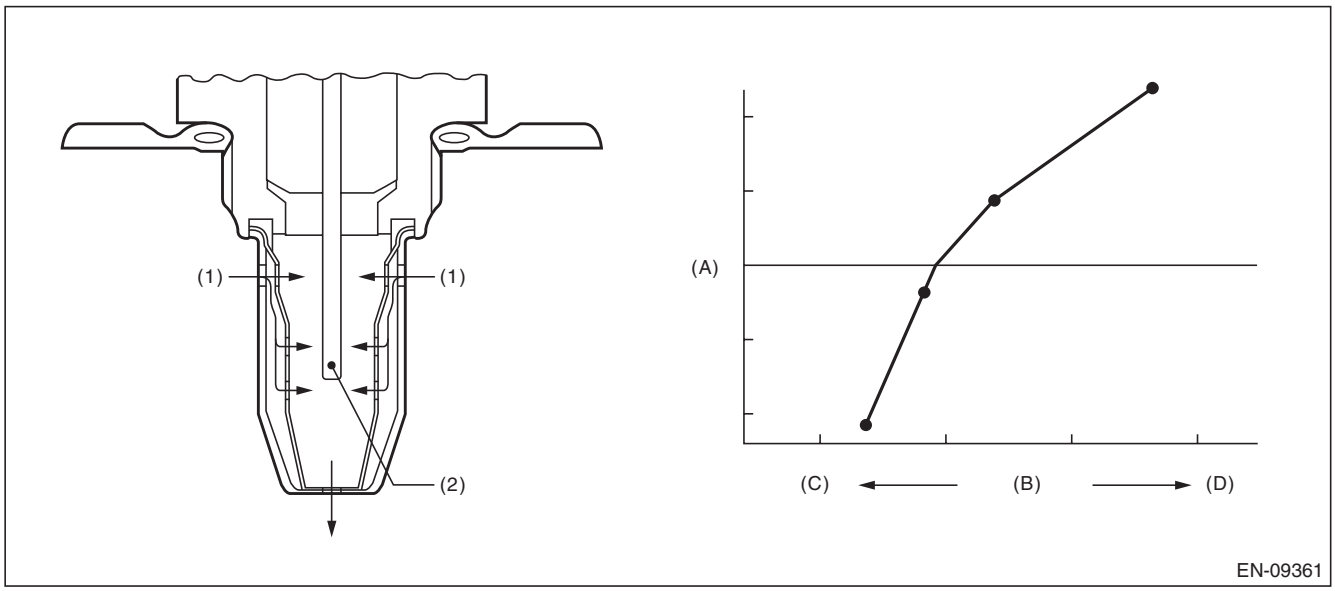

(A)	Electromotive force	(B)	Air fuel ratio	(C)	Lean
(D)	Rich				
(1)	Exhaust gas	(2)	ZrO_2		

GETtheMANUALS.org

3. ENABLE CONDITIONS

Secondary Parameters	Enable Conditions
Battery voltage	> 10.9 V
Closed loop control with main feedback	Operation
Front oxygen (A/F) sensor impedance	≥ 0 Ω and < 50 Ω
Elapsed time after starting the engine	≥ 40000 ms
Engine coolant temperature	≥ 0 °C (32 °F)
Engine speed	≥ 1000 rpm
Amount of intake air	≥ 10 g/s (0.35 oz/s)
After fuel cut	≥ 3000 ms
Learning value of EVAP conc. during purge	< 0.2
Total time of operating canister purge	≥ 20 s
Engine load change	< 0.02 g/rev (0 oz/rev)
Idle switch	OFF

4. GENERAL DRIVING CYCLE

Perform diagnosis only once in a city driving including normal acceleration and deceleration.

GETtheMANUALS.org

5. DIAGNOSTIC METHOD 1

Detect the malfunction depending on the average value of time necessary for λ to inverse the air fuel ratio from “Lean → Rich → Lean” to “Rich → Lean → Rich”.

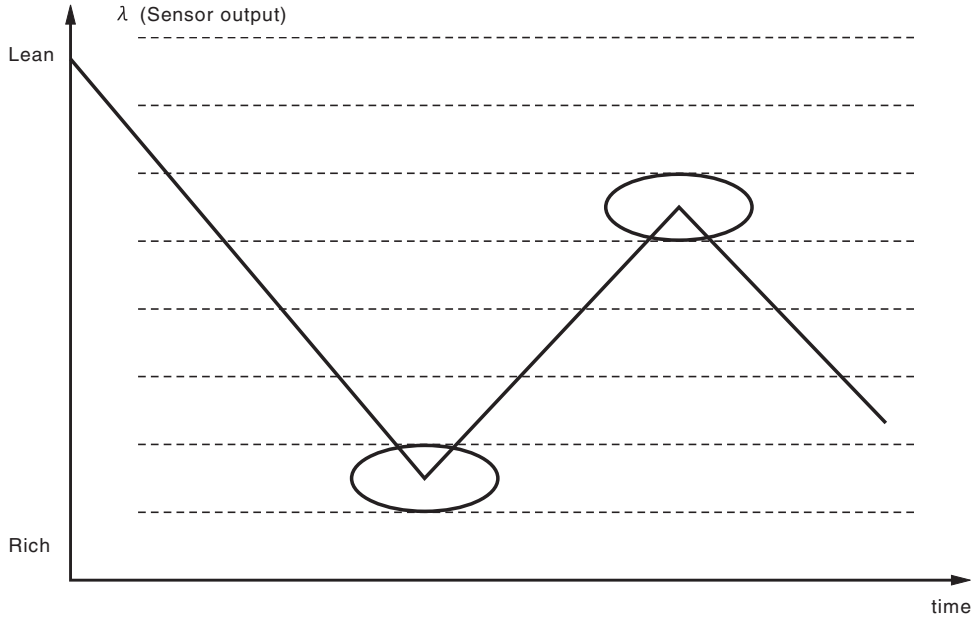

EN-09342

- **Abnormality Judgment**

Judge as NG when the following conditions are established.

Judgment Value

Malfunction Criteria	Threshold Value	DTC
Average value of time necessary for λ to inverse the air fuel ratio to Lean → Rich → Lean.	> 190 ms (Bin5 model) > 450 ms (ULEV model)	P015A P015C
Average value of time necessary for λ to inverse the air fuel ratio to Rich → Lean → Rich.	> 900 ms	P015B P015D

Time Needed for Diagnosis: 50 times of inversion
Malfunction Indicator Light Illumination: Illuminates when malfunction occurs in 2 continuous driving cycles.

- **Normality Judgment**

Judge as OK and clear the NG if the following conditions are established.

Judgment Value

Malfunction Criteria	Threshold Value	DTC
Average value of time necessary for λ to inverse the air fuel ratio to Lean → Rich → Lean.	≤ 190 ms (Bin5 model) ≤ 450 ms (ULEV model)	P015A P015C
Average value of time necessary for λ to inverse the air fuel ratio to Rich → Lean → Rich.	≤ 900 ms	P015B P015D

Time Needed for Diagnosis: 50 times of inversion

GETtheMANUALS.org

6. DIAGNOSTIC METHOD 2

Detect the malfunction by calculating the average amplitude of λ.

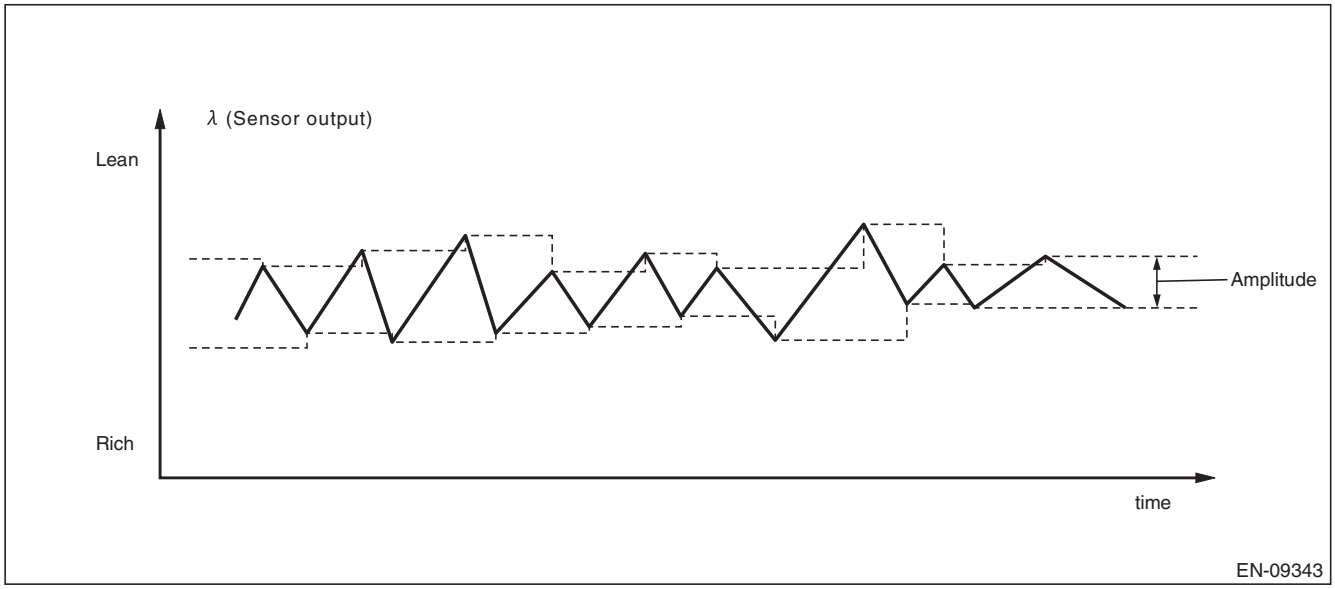

- **Abnormality Judgment**

Judge as NG when the following conditions are established.

Judgment Value

Malfunction Criteria	Threshold Value	DTC
Average value for λ amplitude	> 0.06 (Bin5 model) > 0.07 (ULEV model)	P015A, P015B, P015C and P015D

Time Needed for Diagnosis: 60 seconds
Malfunction Indicator Light Illumination: Illuminates when malfunction occurs in 2 continuous driving cycles.

- **Normality Judgment**

Judge as OK and clear the NG if the following conditions are established.

Judgment Value

Malfunction Criteria	Threshold Value	DTC
Average value for λ amplitude	≤ 0.06 (Bin5 model) ≤ 0.07 (ULEV model)	P015A, P015B, P015C and P015D

Time Needed for Diagnosis: 60 seconds

GETtheMANUALS.org

BH:DTC P015B O2 SENSOR DELAYED RESPONSE - LEAN TO RICH (BANK 1 SENSOR 1)

1. OUTLINE OF DIAGNOSIS

NOTE:
For the detection standard, refer to DTC P015A. <Ref. to GD(H6DO)-95, DTC P015A O2 SENSOR DELAYED RESPONSE - RICH TO LEAN (BANK 1 SENSOR 1), Diagnostic Trouble Code (DTC) Detecting Criteria.>

BI: DTC P015C O2 SENSOR DELAYED RESPONSE - RICH TO LEAN (BANK 2 SENSOR 1)

1. OUTLINE OF DIAGNOSIS

NOTE:
For the detection standard, refer to DTC P015A. <Ref. to GD(H6DO)-95, DTC P015A O2 SENSOR DELAYED RESPONSE - RICH TO LEAN (BANK 1 SENSOR 1), Diagnostic Trouble Code (DTC) Detecting Criteria.>

BJ:DTC P015D O2 SENSOR DELAYED RESPONSE - LEAN TO RICH (BANK 2 SENSOR 1)

1. OUTLINE OF DIAGNOSIS

NOTE:
For the detection standard, refer to DTC P015A. <Ref. to GD(H6DO)-95, DTC P015A O2 SENSOR DELAYED RESPONSE - RICH TO LEAN (BANK 1 SENSOR 1), Diagnostic Trouble Code (DTC) Detecting Criteria.>

BK:DTC P0160 O2 SENSOR CIRCUIT NO ACTIVITY DETECTED (BANK2 SENSOR2)

1. OUTLINE OF DIAGNOSIS

NOTE:
For the detection standard, refer to DTC P0140. <Ref. to GD(H6DO)-85, DTC P0140 O2 SENSOR CIRCUIT NO ACTIVITY DETECTED (BANK1 SENSOR2), Diagnostic Trouble Code (DTC) Detecting Criteria.>

BL:DTC P0161 O2 SENSOR HEATER CIRCUIT (BANK2 SENSOR2)

1. OUTLINE OF DIAGNOSIS

NOTE:
For the detection standard, refer to DTC P0141. <Ref. to GD(H6DO)-87, DTC P0141 O2 SENSOR HEATER CIRCUIT (BANK1 SENSOR2), Diagnostic Trouble Code (DTC) Detecting Criteria.>

GETtheMANUALS.org

BM:DTC P0171 SYSTEM TOO LEAN (BANK 1)

1. OUTLINE OF DIAGNOSIS

Detect fuel system malfunction by the amount of main feedback control.

Diagnostic method

Fuel system is diagnosed by comparing the target air fuel ratio calculated by ECM with the actual air fuel ratio measured by sensor.

2. ENABLE CONDITION

Secondary Parameters	Enable Conditions
A/F main learning system	In operation
Engine coolant temperature	≥ 75 °C (167 °F)
Engine load change	< 0.02 g/rev (0 oz/rev)
Engine load	≥ Value of Map 1

Map 1

Engine speed (rpm)	Idling	700	1000	1500	2000	2500	3000	3500	4000	4500	5000
Measured value (g (oz)/ rev)	na	0.357 (0.01)	0.25 (0.01)	0.25 (0.01)	0.317 (0.01)	0.326 (0.01)	0.337 (0.01)	0.397 (0.01)	0.439 (0.02)	0.454 (0.02)	0.454 (0.02)

3. GENERAL DRIVING CYCLE

Perform the diagnosis continuously at idling or at a constant speed after warming up the engine.

4. DIAGNOSTIC METHOD

- **Abnormality Judgment**

Compare the diagnostic value (fsobd) with the threshold value, and if a condition meeting the malfunction criteria below continues for 10 s × 10 time(s) or more, judge that there is a fault in the fuel system.

Judgment Value

Malfunction Criteria	Threshold Value
fsobd = (sglmd – tglmda) + faf + flaf In this case: sglmd = measured lambda tglmda = target lambda faf = main feedback compensation coefficient (every 64 milliseconds) flaf = main feedback learning compensation coefficient	≥ Value from Map 2

Map 2

Amount of air (g (oz)/s)	0 (0)	3.2 (0.11)	6.4 (0.23)	9.6 (0.34)	12.8 (0.45)	16 (0.56)	19.2 (0.68)
fsobdL1 (%)	1.4	1.4	1.332	1.265	1.265	1.265	1.265

Time Needed for Diagnosis: 10 s × 10 time(s)
Malfunction Indicator Light Illumination: Illuminates when malfunction occurs in 2 continuous driving cycles.

- **Normality Judgment**

Judge as OK and clear the NG if the continuous time while the following conditions are established is more than the predetermined time.

Judgment Value

Malfunction Criteria	Threshold Value
fsobd = (sglmd – tglmda) + faf + flaf	< 1.15

Time Needed for Diagnosis: 10 s

GETtheMANUALS.org

BN:DTC P0172 SYSTEM TOO RICH (BANK 1)

1. OUTLINE OF DIAGNOSIS

Detect fuel system malfunction by the amount of main feedback control.

Diagnostic method

Fuel system is diagnosed by comparing the target air fuel ratio calculated by ECM with the actual air fuel ratio measured by sensor.

2. ENABLE CONDITION

Secondary Parameters	Enable Conditions
A/F main learning system	In operation
Engine coolant temperature	≥ 75 °C (167 °F)
Engine load change	≤ 0.02 g/rev (0 oz/rev)
Learning value of EVAP conc.	< 0.2
Cumulative time of canister purge after engine start	≥ 20 s
Continuous period after canister purge starting	≥ 5000 ms
Engine load	≥ Value of Map 1

Map 1

Engine speed (rpm)	Idling	700	1000	1500	2000	2500	3000	3500	4000	4500	5000
Measured value (g (oz)/ rev)	na	0.357 (0.01)	0.25 (0.01)	0.25 (0.01)	0.317 (0.01)	0.326 (0.01)	0.337 (0.01)	0.397 (0.01)	0.439 (0.02)	0.454 (0.02)	0.454 (0.02)

3. GENERAL DRIVING CYCLE

Perform the diagnosis continuously at idling or at a constant speed after warming up the engine.

GETtheMANUALS.org

4. DIAGNOSTIC METHOD

- **Abnormality Judgment**

Compare the diagnostic value (fsobd) with the threshold value, and if a condition meeting the malfunction criteria below continues for 10 s × 10 time(s) or more, judge that there is a fault in the fuel system.

Judgment Value

Malfunction Criteria	Threshold Value
fsobd = (sglmd – tglmda) + faf + flaf In this case: sglmd = measured lambda tglmda = target lambda faf = main feedback compensation coefficient (every 64 milliseconds) flaf = main feedback learning compensation coefficient	< Value of Map 2

Map 2

Amount of air (g (oz)/s)	0 (0)	3.2 (0.11)	6.4 (0.23)	9.6 (0.34)	12.8 (0.45)	16 (0.56)	19.2 (0.68)
fsobdL1 (%)	0.595	0.595	0.688	0.715	0.725	0.735	0.735

Time Needed for Diagnosis: 10 s × 10 time(s)
Malfunction Indicator Light Illumination: Illuminates when malfunction occurs in 2 continuous driving cycles.

- **Normality Judgment**

Judge as OK if the status that the criteria below are met continues for 10 seconds.

Judgment Value

Malfunction Criteria	Threshold Value
fsobd = (sglmd – tglmda) + faf + flaf	≥ 0.85

Time Needed for Diagnosis: 10 s

GETtheMANUALS.org

BO:DTC P0174 SYSTEM TOO LEAN (BANK 2)

1. OUTLINE OF DIAGNOSIS

NOTE:
For the detection standard, refer to DTC P0171. <Ref. to GD(H6DO)-100, DTC P0171 SYSTEM TOO LEAN (BANK 1), Diagnostic Trouble Code (DTC) Detecting Criteria.>

BP:DTC P0175 SYSTEM TOO RICH (BANK 2)

1. OUTLINE OF DIAGNOSIS

NOTE:
For the detection standard, refer to DTC P0172. <Ref. to GD(H6DO)-101, DTC P0172 SYSTEM TOO RICH (BANK 1), Diagnostic Trouble Code (DTC) Detecting Criteria.>

GETtheMANUALS.org

BQ:DTC P0181 FUEL TEMPERATURE SENSOR “A” CIRCUIT RANGE/PERFORMANCE

1. OUTLINE OF DIAGNOSIS

Detect faults in the fuel temperature sensor output properties.
Diagnosis is performed in two methods (drift diagnosis and stuck diagnosis). If either is NG, judge as NG. If both are OK, Judge as OK and clear the NG.

Drift Diagnosis

Normally fuel temperature is lower than engine coolant temperature. When the fuel temperature becomes higher than the engine coolant temperature, the range is considered to be shifted, and judged as NG.

Stuck Diagnosis

As the engine warms up (cumulative amount of intake air after starting is large), if the fuel temperature which should rise does not, determine as being stuck and NG.

2. COMPONENT DESCRIPTION

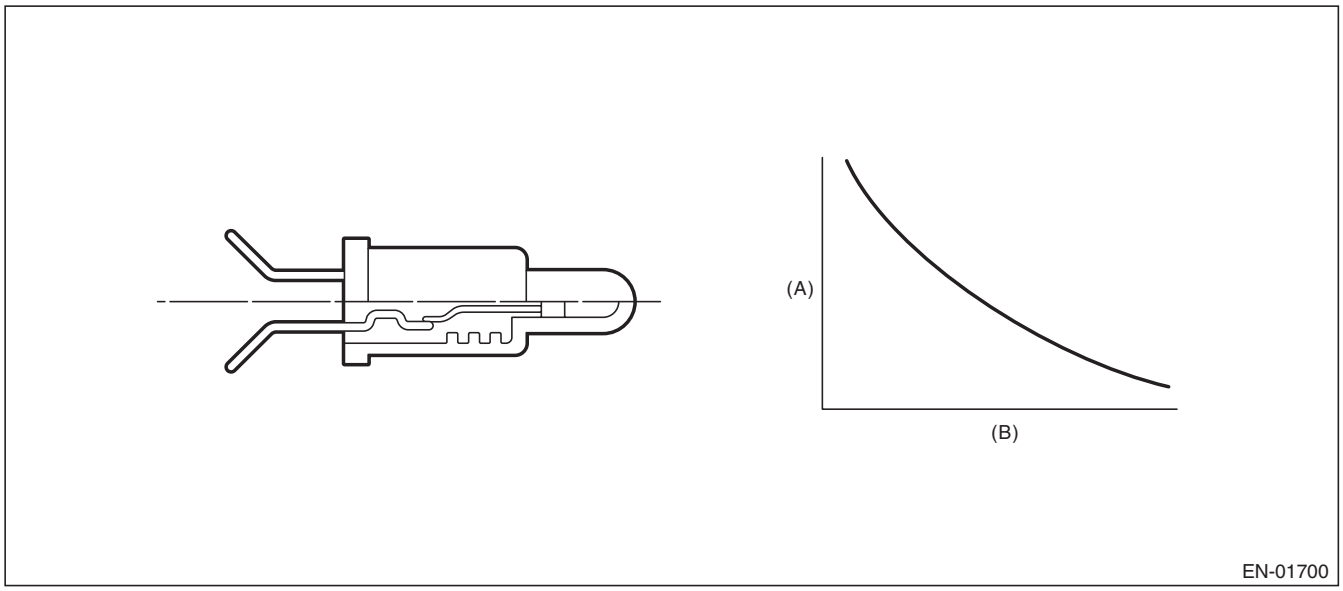

(A) Resistance value (Ω) (B) Fuel temperature °C (°F)

3. ENABLE CONDITION

DRIFT DIAGNOSIS

Secondary Parameters	Enable Conditions
None	

4. GENERAL DRIVING CYCLE

Always perform the diagnosis continuously.

GETtheMANUALS.org

5. DIAGNOSTIC METHOD

• Abnormality Judgment

If the duration of time while the following conditions are met is longer than the time indicated, judge as NG.

Judgment Value

Malfunction Criteria	Threshold Value
Fuel level	≥ 10.5 ℓ (2.77 US gal, 2.31 Imp gal)
Elapsed time after starting the engine	≥ 20 s
Engine coolant temperature – Engine coolant temperature at engine start	> 10 °C (18°F)
Fuel temperature – Engine coolant temperature	≥ 10 °C (18°F)
Battery voltage	≥ 10.9 V

Time Needed for Diagnosis: 120 s
Malfunction Indicator Light Illumination: Illuminates when malfunction occurs in 2 continuous driving cycles.

• Normality Judgment

Judge as OK and clear the NG if the continuous time while the following conditions are established is more than the predetermined time.

Judgment Value

Malfunction Criteria	Threshold Value
Fuel level	≥ 10.5 ℓ (2.77 US gal, 2.31 Imp gal)
Elapsed time after starting the engine	≥ 20 s
Engine coolant temperature – Engine coolant temperature at engine start	> 10 °C (18°F)
Fuel temperature – Engine coolant temperature	< 10 °C (18°F)
Battery voltage	≥ 10.9 V
Engine coolant temperature	< 75 °C (167 °F)

Time Needed for Diagnosis: Less than 1 second

6. ENABLE CONDITION

Stuck Diagnosis

Secondary Parameters	Enable Conditions
Elapsed time after starting the engine	≥ 20000 ms
Battery voltage	≥ 10.9 V

7. GENERAL DRIVING CYCLE

Perform the diagnosis continuously 20 seconds after starting engine.

GETtheMANUALS.org

8. DIAGNOSTIC METHOD

- **Abnormality Judgment**

Judge as NG when the following conditions are established.

Judgment Value

Malfunction Criteria	Threshold Value
Accumulated amount of intake air	≥ 551043 g (19435.29 oz)
Fuel temperature difference between Max. and Min.	< 2 °C (3.6°F)

Time Needed for Diagnosis: Less than 1 second
Malfunction Indicator Light Illumination: Illuminates when malfunction occurs in 2 continuous driving cycles.

- **Normality Judgment**

Judge as OK and clear the NG if the following conditions are established.

Judgment Value

Malfunction Criteria	Threshold Value
Fuel temperature difference between Max. and Min.	≥ 2 °C (3.6°F)

Time Needed for Diagnosis: Less than 1 second

GETtheMANUALS.org

BR:DTC P0182 FUEL TEMPERATURE SENSOR “A” CIRCUIT LOW INPUT

1. OUTLINE OF DIAGNOSIS

Detect the open or short circuit of fuel temperature sensor.
Judge as NG if out of specification.

2. COMPONENT DESCRIPTION

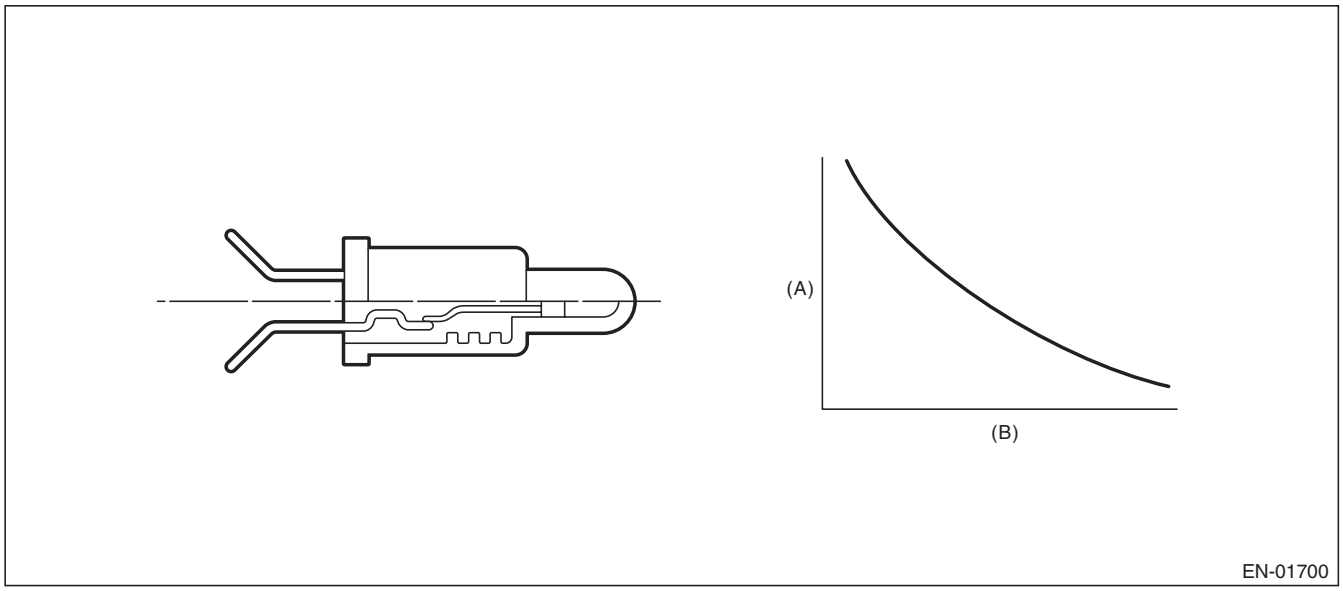

(A) Resistance value (Ω) (B) Fuel temperature °C (°F)

3. ENABLE CONDITION

Secondary Parameters	Enable Conditions
None	

4. GENERAL DRIVING CYCLE

Always perform the diagnosis continuously.

GETtheMANUALS.org

5. DIAGNOSTIC METHOD

- **Abnormality Judgment**

If the duration of time while the following conditions are met is longer than the time indicated, judge as NG.

Judgment Value

Malfunction Criteria	Threshold Value
Output voltage	< 0.748 V
Battery voltage	≥ 10.9 V

Time Needed for Diagnosis: 2500 ms
Malfunction Indicator Light Illumination: Illuminates as soon as a malfunction occurs.

- **Normality Judgment**

Judge as OK and clear the NG if the continuous time while the following conditions are established is more than the predetermined time.

Judgment Value

Malfunction Criteria	Threshold Value
Output voltage	≥ 0.748 V
Battery voltage	≥ 10.9 V

Time Needed for Diagnosis: Less than 1 second

GETtheMANUALS.org

BS:DTC P0183 FUEL TEMPERATURE SENSOR “A” CIRCUIT HIGH INPUT

1. OUTLINE OF DIAGNOSIS

Detect the open or short circuit of fuel temperature sensor.
Judge as NG if out of specification.

2. COMPONENT DESCRIPTION

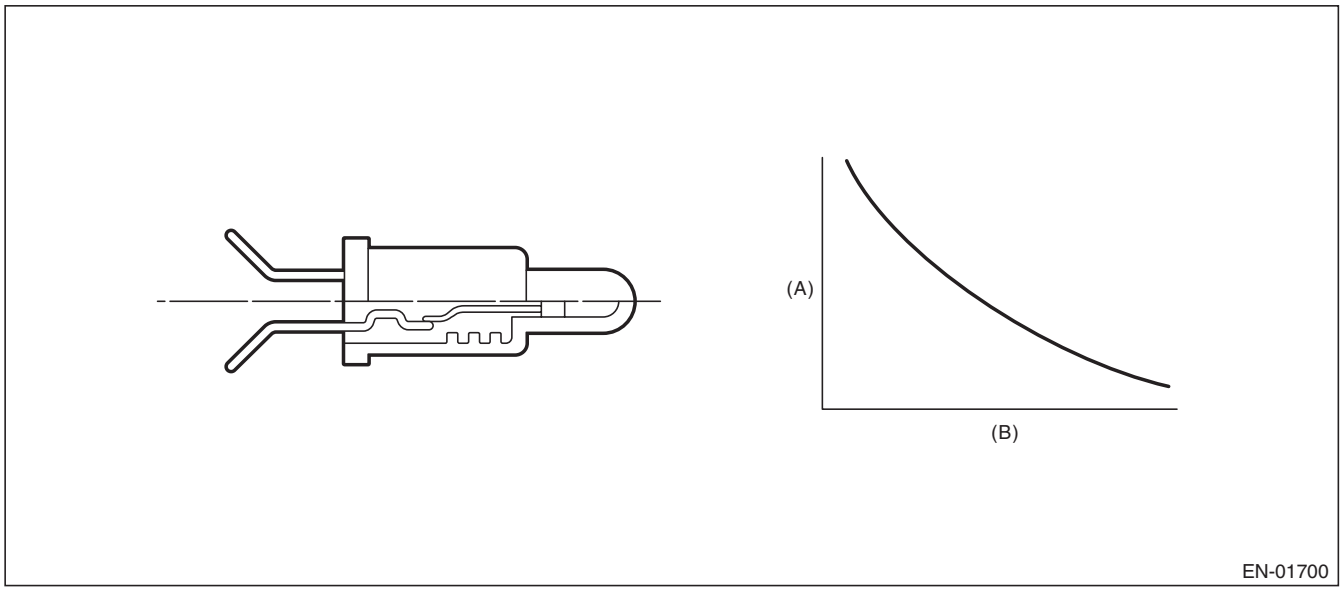

(A) Resistance value (Ω) (B) Fuel temperature °C (°F)

3. ENABLE CONDITION

Secondary Parameters	Enable Conditions
None	

4. GENERAL DRIVING CYCLE

Always perform the diagnosis continuously.

GETtheMANUALS.org

5. DIAGNOSTIC METHOD

- **Abnormality Judgment**

If the duration of time while the following conditions are met is longer than the time indicated, judge as NG.

Judgment Value

Malfunction Criteria	Threshold Value
Output voltage	≥ 4.694 V
Battery voltage	≥ 10.9 V

Time Needed for Diagnosis: 2500 ms
Malfunction Indicator Light Illumination: Illuminates as soon as a malfunction occurs.

- **Normality Judgment**

Judge as OK and clear the NG if the continuous time while the following conditions are established is more than the predetermined time.

Judgment Value

Malfunction Criteria	Threshold Value
Output voltage	< 4.694 V
Battery voltage	≥ 10.9 V

Time Needed for Diagnosis: Less than 1 second

GETtheMANUALS.org

BT:DTC P0196 ENGINE OIL TEMPERATURE SENSOR CIRCUIT RANGE/PERFORMANCE

1. OUTLINE OF DIAGNOSIS

Detect for abnormal values in the oil temperature sensor output properties.
Judge as NG when the oil temperature does not rise even though the engine is running under a condition where it should rise.

2. ENABLE CONDITION

Secondary Parameters	Enable Conditions
Battery voltage	≥ 10.9 V
Engine speed	≥ Value from Map

Map

Engine coolant temperature °C (°F)	–40 (–40)	–30 (–22)	–20 (–4)	–10 (14)	0 (32)	10 (50)	20 (68)	30 (86)
Engine speed rpm	500	500	500	500	500	500	500	500

Engine coolant temperature °C (°F)	40 (104)	50 (122)	60 (140)	70 (158)	80 (176)	90 (194)	100 (212)	110 (230)
Engine speed rpm	500	500	500	500	500	500	500	500

3. GENERAL DRIVING CYCLE

Perform the diagnosis continuously after starting the engine.

GETtheMANUALS.org

4. DIAGNOSTIC METHOD

- **Abnormality Judgment**

Judge as NG when the following conditions are established.

Judgment Value

Malfunction Criteria	Threshold Value
Engine oil temperature	< 50 °C (122 °F)
After engine start oil temperature sensor characteristic diagnosis timer.	≥ Judgment value for after engine start oil temperature sensor characteristic diagnosis timer

After engine start oil temperature sensor characteristic diagnosis timer (timer for diagnosis).
a. Timer stop at fuel cut
b. During the driving conditions except a) above, timer counts up as follows.
64 ms + TOILCNT ms (when at 64 ms)
Where, TOILCNT is determined as follows,
TOILCNT = 0 at idle switch ON
For TOILCNT at Idle switch off, refer to the following table.

		Vehicle speed km/h (MPH)							
		0 (0)	8 (5)	16 (9.9)	24 (14.9)	32 (19.9)	40 (24.9)	48 (29.8)	56 (34.8)
Temperature °C (°F)	–40 (–40)	0 ms	32 ms	76 ms	130 ms	149 ms	171 ms	176 ms	181 ms
	–30 (–22)	0 ms	93 ms	121 ms	157 ms	170 ms	184 ms	193 ms	203 ms
	–20 (–4)	0 ms	123 ms	148 ms	184 ms	193 ms	204 ms	214 ms	226 ms
	–10 (14)	0 ms	166 ms	187 ms	208 ms	223 ms	239 ms	242 ms	245 ms
	0 (32)	0 ms	187 ms	212 ms	243 ms	252 ms	262 ms	266 ms	270 ms

After engine start oil temperature characteristic diagnosis timer judgment value (t).
t = 3600000 ms – 60000 ms × Ti (t ≥ 2400000)
Ti = The lowest coolant temperature after starting the engine.
Time Needed for Diagnosis: Less than 1 second
Malfunction Indicator Light Illumination: Illuminates when malfunction occurs in 2 continuous driving cycles.

- **Normality Judgment**

Judge as OK and clear the NG if the following conditions are established.

Judgment Value

Malfunction Criteria	Threshold Value
Engine oil temperature	≥ 50 °C (122 °F)

Time Needed for Diagnosis: Less than 1 second

GETtheMANUALS.org

BU:DTC P0197 ENGINE OIL TEMPERATURE SENSOR LOW

1. OUTLINE OF DIAGNOSIS

Detect the open or short circuit of the oil temperature sensor.
Judge as NG when outside of the judgment value.

2. ENABLE CONDITION

Secondary Parameters	Enable Conditions
None	

3. GENERAL DRIVING CYCLE

Always perform the diagnosis continuously.

4. DIAGNOSTIC METHOD

- **Abnormality Judgment**

If the duration of time while the following conditions are met is longer than the time indicated, judge as NG.

Judgment Value

Malfunction Criteria	Threshold Value
Output voltage	< 0.197 V

Time Needed for Diagnosis: 500 ms
Malfunction Indicator Light Illumination: Illuminates as soon as a malfunction occurs.

- **Normality Judgment**

Judge as OK and clear the NG if the continuous time while the following conditions are established is more than the predetermined time.

Judgment Value

Malfunction Criteria	Threshold Value
Output voltage	≥ 0.197 V

Time Needed for Diagnosis: Less than 1 second

GETtheMANUALS.org

BV:DTC P0198 ENGINE OIL TEMPERATURE SENSOR HIGH

1. OUTLINE OF DIAGNOSIS

Detect the open or short circuit of the oil temperature sensor.
Judge as NG when outside of the judgment value.

2. ENABLE CONDITION

Secondary Parameters	Enable Conditions
None	

3. GENERAL DRIVING CYCLE

Always perform the diagnosis continuously.

4. DIAGNOSTIC METHOD

- **Abnormality Judgment**

If the duration of time while the following conditions are met is longer than the time indicated, judge as NG.

Judgment Value

Malfunction Criteria	Threshold Value
Output voltage	≥ 4.694 V

Time Needed for Diagnosis: 500 ms
Malfunction Indicator Light Illumination: Illuminates as soon as a malfunction occurs.

- **Normality Judgment**

Judge as OK and clear the NG if the continuous time while the following conditions are established is more than the predetermined time.

Judgment Value

Malfunction Criteria	Threshold Value
Output voltage	< 4.694 V

Time Needed for Diagnosis: Less than 1 second

GETtheMANUALS.org

BW:DTC P0201 INJECTOR #1

1. OUTLINE OF DIAGNOSIS

Based on the self-diagnostic result of the injector driving IC, judge the injector driving circuit as normal or abnormal.
Injector driving IC detects the status of “fuel remains injected” or “fuel is not injected” as a malfunction.

2. ENABLE CONDITIONS

Secondary Parameters	Enable Conditions
Battery voltage	≥ 10.9 V
Elapsed time after starting the engine	> 1 s
Engine speed	> 500 rpm
Injection time	≥ 1000 μs and < 120000000/engine speed – 1000 μs
Injection status	Not during fuel cut and Not during asynchronous injection controlled by crankshaft position sensor

3. GENERAL DRIVING CYCLE

Always perform the diagnosis continuously.

4. DIAGNOSTIC METHOD

- **Abnormality Judgment**

Judge as NG when the following conditions are established.

Judgment Value

Malfunction Criteria	Threshold Value
Injector driving IC information	Malfunction

Time Needed for Diagnosis: 2500 ms
Malfunction Indicator Light Illumination: Illuminates as soon as a malfunction occurs.

- **Normality Judgment**

Judge as OK and clear the NG if the following conditions are established.

Judgment Value

Malfunction Criteria	Threshold Value
Injector driving IC information	Normal

Time Needed for Diagnosis: Less than 1 second

GETtheMANUALS.org

BX:DTC P0202 INJECTOR #2

1. OUTLINE OF DIAGNOSIS

NOTE:
For the detection standard, refer to DTC P0201. <Ref. to GD(H6DO)-115, DTC P0201 INJECTOR #1, Diagnostic Trouble Code (DTC) Detecting Criteria.>

BY:DTC P0203 INJECTOR #3

1. OUTLINE OF DIAGNOSIS

NOTE:
For the detection standard, refer to DTC P0201. <Ref. to GD(H6DO)-115, DTC P0201 INJECTOR #1, Diagnostic Trouble Code (DTC) Detecting Criteria.>

BZ:DTC P0204 INJECTOR #4

1. OUTLINE OF DIAGNOSIS

NOTE:
For the detection standard, refer to DTC P0201. <Ref. to GD(H6DO)-115, DTC P0201 INJECTOR #1, Diagnostic Trouble Code (DTC) Detecting Criteria.>

CA:DTC P0205 INJECTOR #5

1. OUTLINE OF DIAGNOSIS

NOTE:
For the detection standard, refer to DTC P0201. <Ref. to GD(H6DO)-115, DTC P0201 INJECTOR #1, Diagnostic Trouble Code (DTC) Detecting Criteria.>

CB:DTC P0206 INJECTOR #6

1. OUTLINE OF DIAGNOSIS

NOTE:
For the detection standard, refer to DTC P0201. <Ref. to GD(H6DO)-115, DTC P0201 INJECTOR #1, Diagnostic Trouble Code (DTC) Detecting Criteria.>

GETtheMANUALS.org

CC:DTC P0222 THROTTLE/PEDAL POSITION SENSOR/SWITCH “B” CIRCUIT LOW

1. OUTLINE OF DIAGNOSIS

Detect the open or short circuit of throttle position sensor 2.
Judge as NG if out of specification.

2. COMPONENT DESCRIPTION

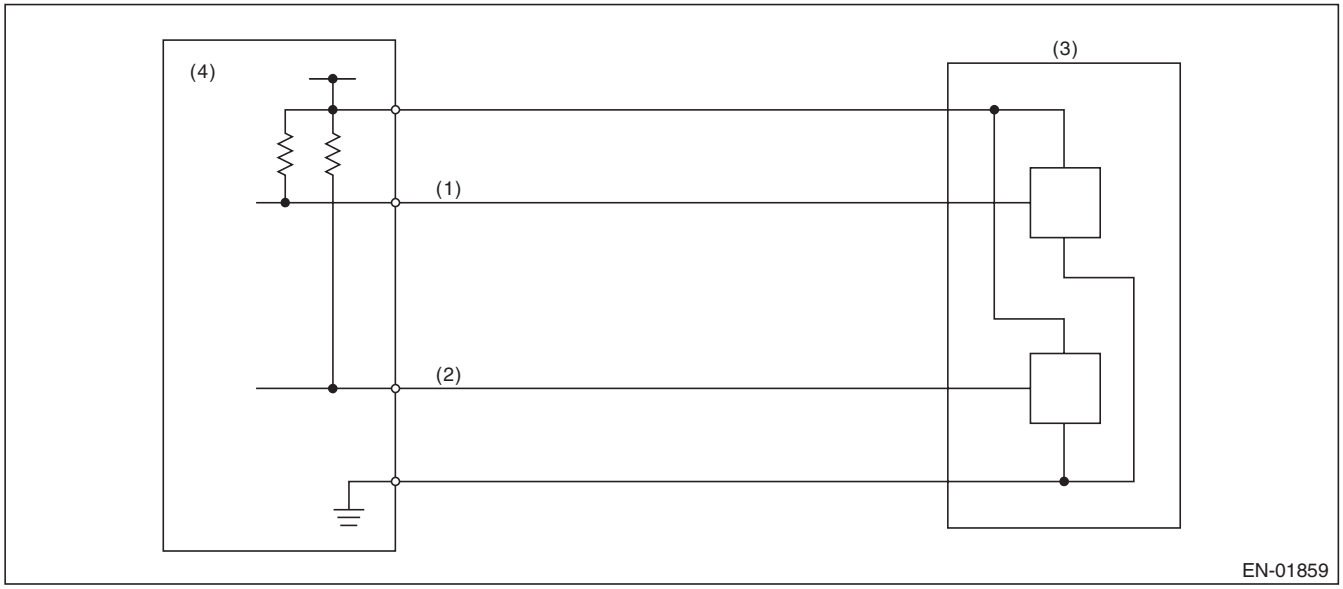

(1) Throttle position sensor 1 signal
(2) Throttle position sensor 2 signal
(3) Throttle position sensor
(4) Engine control module (ECM)

3. ENABLE CONDITION

Secondary Parameters	Enable Conditions
Ignition switch	ON
Battery voltage	≥ 6 V

4. GENERAL DRIVING CYCLE

Always perform the diagnosis continuously.

GETtheMANUALS.org

5. DIAGNOSTIC METHOD

- **Abnormality Judgment**

If the duration of time while the following conditions are met is longer than the time indicated, judge as NG.

Judgment Value

Malfunction criteria	Threshold value
Sensor 2 input voltage	≤ 1.07 V

Time Needed for Diagnosis: 24 ms
Malfunction Indicator Light Illumination: Illuminates as soon as a malfunction occurs.

- **Normality Judgment**

Judge as OK and clear the NG if the continuous time while the following conditions are established is more than the predetermined time.

Judgment Value

Malfunction criteria	Threshold value
Sensor 2 input voltage	> 1.07 V

Time Needed for Diagnosis: 24 ms

GETtheMANUALS.org

CD:DTC P0223 THROTTLE/PEDAL POSITION SENSOR/SWITCH “B” CIRCUIT HIGH

1. OUTLINE OF DIAGNOSIS

Detect the open or short circuit of throttle position sensor 2.
Judge as NG if out of specification.

2. COMPONENT DESCRIPTION

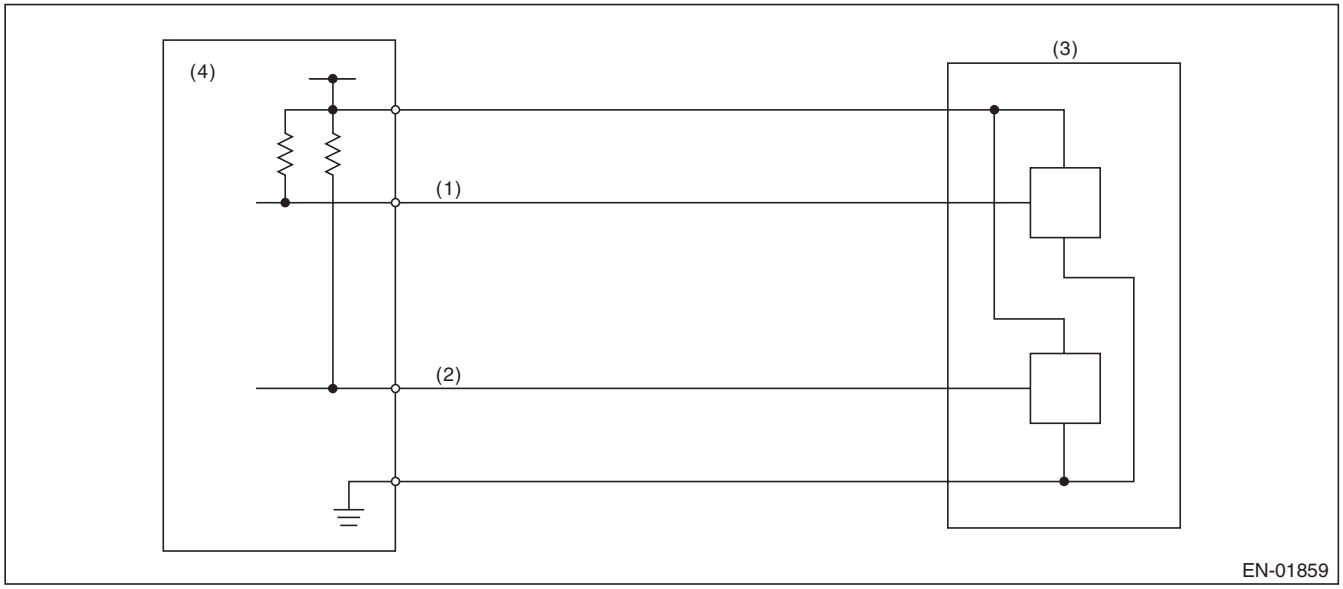

(1) Throttle position sensor 1 signal
(2) Throttle position sensor 2 signal
(3) Throttle position sensor
(4) Engine control module (ECM)

3. ENABLE CONDITION

Secondary Parameters	Enable Conditions
Ignition switch	ON
Battery voltage	≥ 6 V

4. GENERAL DRIVING CYCLE

Always perform the diagnosis continuously.

GETtheMANUALS.org

5. DIAGNOSTIC METHOD

- **Abnormality Judgment**

If the duration of time while the following conditions are met is longer than the time indicated, judge as NG.

Judgment Value

Malfunction criteria	Threshold value
Sensor 2 input voltage	≥ 4.858 V

Time Needed for Diagnosis: 24 ms
Malfunction Indicator Light Illumination: Illuminates as soon as a malfunction occurs.

- **Normality Judgment**

Judge as OK and clear the NG if the continuous time while the following conditions are established is more than the predetermined time.

Judgment Value

Malfunction criteria	Threshold value
Sensor 2 input voltage	< 4.858 V

Time Needed for Diagnosis: 24 ms

GETtheMANUALS.org

CE:DTC P0230 FUEL PUMP PRIMARY CIRCUIT

1. OUTLINE OF DIAGNOSIS

Detect the malfunction of fuel pump control unit.
Judge as NG when the NG signal is sent through a diagnostic line coming from the fuel pump control unit.
Fuel pump control unit detects the open or short circuit malfunction for each line, and then sends NG signals if one of them is found NG.

2. COMPONENT DESCRIPTION

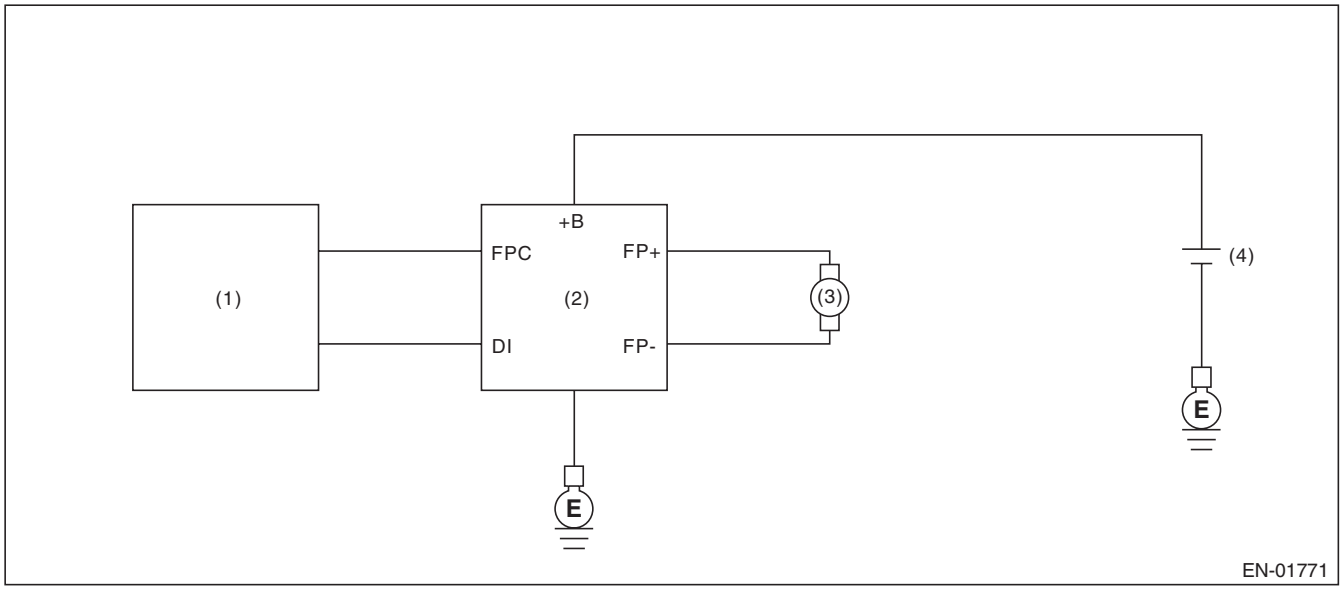

(1) Engine control module (ECM)
(2) Fuel pump control unit
(3) Fuel pump
(4) Battery

3. ENABLE CONDITION

Secondary Parameters	Enable Conditions
None	

4. GENERAL DRIVING CYCLE

Always perform the diagnosis continuously.

GETtheMANUALS.org

5. DIAGNOSTIC METHOD

- **Abnormality Judgment**

If the duration of time while the following conditions are met is longer than the time indicated, judge as NG.

Judgment Value

Malfunction Criteria	Threshold Value
Battery voltage	≥ 8 V
Elapsed time after starting the engine	≥ 180000 ms
Fuel pump control	ON
Fuel pump control unit output diagnosis signal	Low
Fuel level	≥ 10.5 ℓ (2.77 US gal, 2.31 Imp gal)

Time Needed for Diagnosis: 2500 ms
Malfunction Indicator Light Illumination: Illuminates when malfunction occurs in 2 continuous driving cycles.

- **Normality Judgment**

Judge as OK and clear the NG if the continuous time while the following conditions are established is more than the predetermined time.

Judgment Value

Malfunction Criteria	Threshold Value
Battery voltage	≥ 8 V
Elapsed time after starting the engine	≥ 180000 ms
Fuel pump control	ON
Fuel pump control unit output diagnosis signal	High
Fuel level	≥ 10.5 ℓ (2.77 US gal, 2.31 Imp gal)

Time Needed for Diagnosis: Less than 1 second

GETtheMANUALS.org

CF:DTC P0301 CYLINDER 1 MISFIRE DETECTED

1. OUTLINE OF DIAGNOSIS

Detect the presence of misfire occurrence. (Revolution fluctuation method)
Monitoring Misfire which influences exhaust deterioration (1.5 times of FTP) and catalyst damage is made obligatory by the law. Misfire affecting these two has two patterns below. :

- Intermittent misfire (The same cylinder misfires in random, or different cylinders misfire in random.): FTP 1.5 times misfire
- Every time misfire (The same cylinder misfires every time.): FTP 1.5 times misfire, Catalyst damage misfire

The following detecting methods are adopted for these detection.
1) Intermittent misfire: FTP 1.5 times misfire

- 120° Interval Difference Method
- 360° Interval Difference Method (whole range)
- 720° Interval Difference Method (3,000 rpm or more)

2) Misfire every time: FTP 1.5 times misfire, Catalyst damage misfire

- 360° Interval Difference Method

2. ENABLE CONDITION

Secondary Parameters	Enable Conditions
All secondary parameters enable conditions	≥ 1024 ms
Intake manifold pressure change at 120°CA	< Value of Map 1
Throttle position change during 16 milliseconds	< 20 °
Fuel shut-off function	Not in operation
Fuel level	≥ 10.5 ℓ (2.77 US gal, 2.31 Imp gal)
Vehicle dynamic control or AT torque control	Not in operation
Evaporative system leak check	Not in operation
Engine speed	450 rpm — 6500 rpm
Intake manifold pressure	≥ Value from Map 2
Battery voltage	≥ 8 V
Fuel parameter determination	Not extremely low volatility
Elapsed time after starting the engine	≥ 0 ms
Engine speed change during 32 milliseconds	< 500 rpm

Map 1

rpm	700	1000	1500	2000	2500	3000	3500	4000
kPa (mmHg, inHg)	20 (150, 5.9)	20 (150, 5.9)	20 (150, 5.9)	20 (150, 5.9)	20 (150, 5.9)	20 (150, 5.9)	20 (150, 5.9)	20 (150, 5.9)

rpm	4500	5000	5500	6000	6500	7000
kPa (mmHg, inHg)	20 (150, 5.9)	20 (150, 5.9)	20 (150, 5.9)	20 (150, 5.9)	20 (150, 5.9)	20 (150, 5.9)

GETtheMANUALS.org

Map 2

- Normal ignition

		Barometric pressure (kPa (mmHg, inHg))						
		60 (450.0 , 17.7)	66.7 (500.0 , 19.7)	72.2 (542.0 , 21.3)	85.2 (639.0 , 25.2)	86.2 (647.0 , 25.5)	92 (690.0 , 27.2)	100.5 (754.0 , 29.7)
Engine speed (rpm)	700	22.4 (168.4 , 6.6)	22.4 (168.4 , 6.6)	22.4 (168.4 , 6.6)	23.3 (174.5 , 6.9)	23.6 (176.7 , 7)	24.4 (183.4 , 7.2)	26.5 (198.7 , 7.8)
	1000	21.3 (159.7 , 6.3)	21.3 (159.7 , 6.3)	21.3 (159.7 , 6.3)	22.4 (168.2 , 6.6)	22.8 (170.8 , 6.7)	23.4 (175.4 , 6.9)	25.3 (189.8 , 7.5)
	1500	20.8 (156.1 , 6.1)	20.8 (156.1 , 6.1)	20.8 (156.1 , 6.1)	22 (165.2 , 6.5)	22.2 (166.7 , 6.6)	22.9 (172.2 , 6.8)	24.6 (184.3 , 7.3)
	2000	22.3 (167.4 , 6.6)	22.3 (167.4 , 6.6)	22.3 (167.4 , 6.6)	23.9 (179.2 , 7.1)	24.2 (181.8 , 7.2)	25 (187.6 , 7.4)	26.9 (201.7 , 7.9)
	2500	20.7 (155.0 , 6.1)	20.7 (155.0 , 6.1)	20.7 (155.0 , 6.1)	21.8 (163.9 , 6.5)	21.9 (164.4 , 6.5)	22.8 (171.0 , 6.7)	24.3 (182.1 , 7.2)
	3000	22.3 (167.1 , 6.6)	22.3 (167.1 , 6.6)	22.3 (167.1 , 6.6)	23.6 (177.0 , 7)	23.9 (179.5 , 7.1)	24.8 (185.7 , 7.3)	26.4 (197.9 , 7.8)
	3500	25.3 (189.9 , 7.5)	25.3 (189.9 , 7.5)	25.3 (189.9 , 7.5)	26.6 (199.3 , 7.8)	26.2 (196.9 , 7.8)	27.4 (205.7 , 8.1)	28.5 (214.1 , 8.4)
	4000	25 (187.4 , 7.4)	25 (187.4 , 7.4)	25 (187.4 , 7.4)	26.6 (199.9 , 7.9)	25.9 (194.6 , 7.7)	27.1 (203.0 , 8)	28 (210.3 , 8.3)
	4500	26.5 (199.1 , 7.8)	26.5 (199.1 , 7.8)	26.5 (199.1 , 7.8)	27.6 (206.9 , 8.1)	26.7 (200.2 , 7.9)	28 (209.8 , 8.3)	28.7 (215.3 , 8.5)
	5000	28.5 (213.8 , 8.4)	28.5 (213.8 , 8.4)	28.5 (213.8 , 8.4)	29.5 (221.6 , 8.7)	28.6 (214.9 , 8.5)	29.9 (224.5 , 8.8)	30.7 (230.0 , 9.1)
	5500	30.5 (228.5 , 9)	30.5 (228.5 , 9)	30.5 (228.5 , 9)	31.5 (236.3 , 9.3)	30.6 (229.6 , 9)	31.9 (239.2 , 9.4)	32.6 (244.8 , 9.6)
	6000	32.4 (243.2 , 9.6)	32.4 (243.2 , 9.6)	32.4 (243.2 , 9.6)	33.5 (251.0 , 9.9)	32.6 (244.3 , 9.6)	33.8 (253.9 , 10)	34.6 (259.5 , 10.2)
	6400	34 (255.0 , 10)	34 (255.0 , 10)	34 (255.0 , 10)	35 (262.8 , 10.3)	34.1 (256.1 , 10.1)	35.4 (265.7 , 10.5)	36.2 (271.2 , 10.7)
kPa (mmHg, inHg)								

GETtheMANUALS.org

- Idling ignition

		Barometric pressure (kPa (mmHg, inHg))						
		60 (450.0 , 17.7)	66.7 (500.0 , 19.7)	72.2 (542.0 , 21.3)	85.2 (639.0 , 25.2)	86.2 (647.0 , 25.5)	92 (690.0 , 27.2)	100.5 (754.0 , 29.7)
Engine speed (rpm)	700	22.4 (168.4 , 6.6)	22.4 (168.4 , 6.6)	22.4 (168.4 , 6.6)	23.3 (174.5 , 6.9)	23.6 (176.7 , 7)	24.4 (183.4 , 7.2)	26.5 (198.7 , 7.8)
	1000	21.4 (160.4 , 6.3)	21.4 (160.4 , 6.3)	21.4 (160.4 , 6.3)	22.5 (168.9 , 6.6)	24.2 (181.3 , 7.1)	26.3 (197.7 , 7.8)	23.9 (179.3 , 7.1)
	1500	21.8 (163.4 , 6.4)	21.8 (163.4 , 6.4)	21.8 (163.4 , 6.4)	23 (172.5 , 6.8)	24.8 (185.8 , 7.3)	25.8 (193.3 , 7.6)	24.5 (183.5 , 7.2)
	2000	26.9 (202.1 , 8)	26.9 (202.1 , 8)	26.9 (202.1 , 8)	28.5 (213.9 , 8.4)	28.6 (214.5 , 8.4)	29.9 (224.6 , 8.8)	31.7 (237.6 , 9.4)
	2500	27 (202.7 , 8)	27 (202.7 , 8)	27 (202.7 , 8)	28.2 (211.5 , 8.3)	28.4 (212.7 , 8.4)	29.1 (218.5 , 8.6)	30.7 (230.2 , 9.1)
	3000	29 (217.3 , 8.6)	29 (217.3 , 8.6)	29 (217.3 , 8.6)	30.3 (227.2 , 8.9)	30.5 (228.6 , 9)	32.2 (241.4 , 9.5)	33.2 (249.1 , 9.8)
	3500	32 (240.1 , 9.5)	32 (240.1 , 9.5)	32 (240.1 , 9.5)	33.3 (249.5 , 9.8)	33.9 (254.6 , 10)	34.5 (259.0 , 10.2)	36 (270.1 , 10.6)
	4000	32 (240.1 , 9.5)	32 (240.1 , 9.5)	32 (240.1 , 9.5)	33.7 (252.6 , 9.9)	33.3 (250.0 , 9.8)	34.3 (257.6 , 10.1)	36 (270.0 , 10.6)
	4500	34.1 (255.7 , 10.1)	34.1 (255.7 , 10.1)	34.1 (255.7 , 10.1)	35.1 (263.5 , 10.4)	33.7 (252.8 , 10)	35.6 (266.8 , 10.5)	36.4 (273.4 , 10.8)
	5000	36 (270.4 , 10.6)	36 (270.4 , 10.6)	36 (270.4 , 10.6)	37.1 (278.2 , 11)	35.7 (267.5 , 10.5)	37.5 (281.5 , 11.1)	38.4 (288.1 , 11.3)
	5500	38 (285.1 , 11.2)	38 (285.1 , 11.2)	38 (285.1 , 11.2)	39 (292.9 , 11.5)	37.6 (282.2 , 11.1)	39.5 (296.2 , 11.7)	40.4 (302.8 , 11.9)
	6000	40 (299.9 , 11.8)	40 (299.9 , 11.8)	40 (299.9 , 11.8)	41 (307.6 , 12.1)	39.6 (297.0 , 11.7)	41.4 (310.9 , 12.2)	42.3 (317.5 , 12.5)
	6400	41.5 (311.6 , 12.3)	41.5 (311.6 , 12.3)	41.5 (311.6 , 12.3)	42.6 (319.4 , 12.6)	41.2 (308.7 , 12.2)	43 (322.7 , 12.7)	43.9 (329.2 , 13)
kPa (mmHg, inHg)								

3. GENERAL DRIVING CYCLE

- If conditions are met, it is possible to detect the misfires from idling to high engine speed. However, to avoid excessive load or harm to the engine, perform diagnosis at idle.
- Perform the diagnosis continuously.

4. DIAGNOSTIC METHOD

When a misfire occurs, the engine speed will decrease and the crankshaft position speed will change. Calculate the interval difference value (diagnostic value) from crankshaft position speed by the following formula, and judge whether a misfire is occurring or not comparing the calculated result with judgment value. Count the number of misfires, if the misfire ratio is higher during 1000 revs. or 200 revs., judge corresponding cylinders as NG.

Diagnostic value calculation (Calculate from angle speed) →	Misfire detection every single ignition (Compare diagnostic value with judgment value) →	NG judgment (Misfire occurrence judgment required by the law) (Compare number of misfire with judgment value)
	• 120° Interval Difference Method • 360° Interval Difference Method • 720° Interval Difference Method	• FTP 1.5 times misfire NG judgment • Catalyst damage misfire NG judgment

GETtheMANUALS.org

As shown in the following figure, pick a cylinder as the standard and name it omg 0. And the former crankshaft position speed is named omg 1, the second former crankshaft position speed is named omg 2, the third is named omg 3, etc.

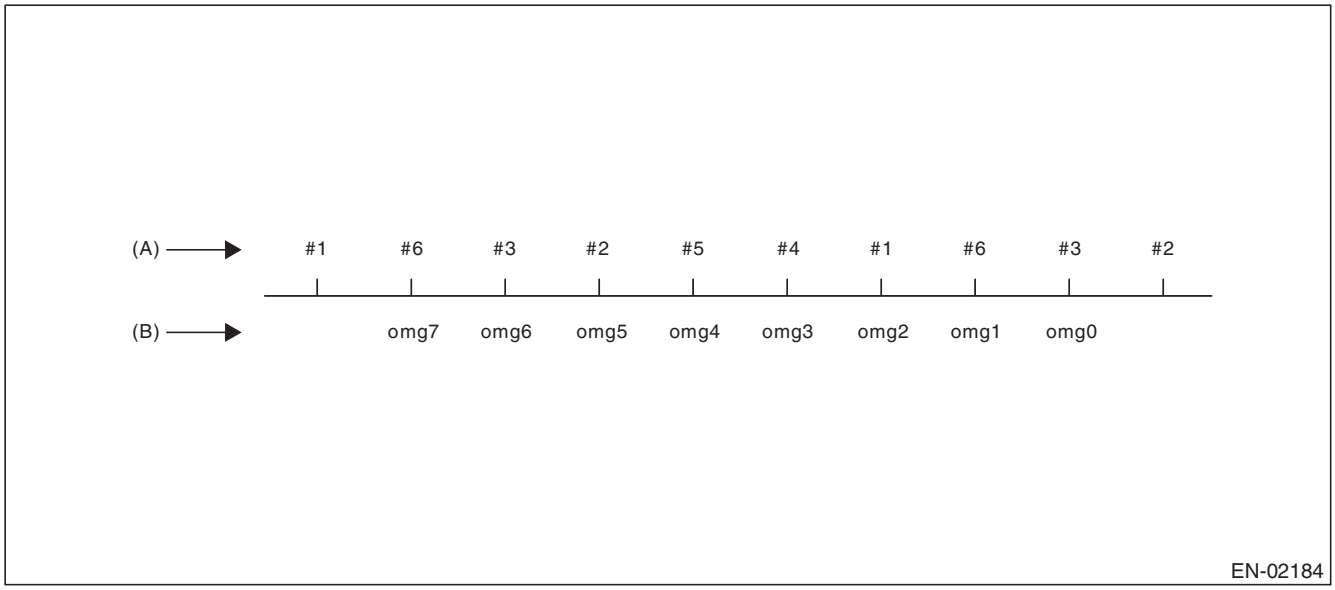

(A) Ignition order (B) Crankshaft position speed

120° Interval Difference Method

Diagnostic value	domg 120 = (omg 1 – omg 0) – (omg 7 – omg 1)/6
Judge as a misfire in the following cases. • domg 120 > judgment value of positive side • domg 121 ≤ judgment value of negative side (Diagnostic value before 120° CA)	

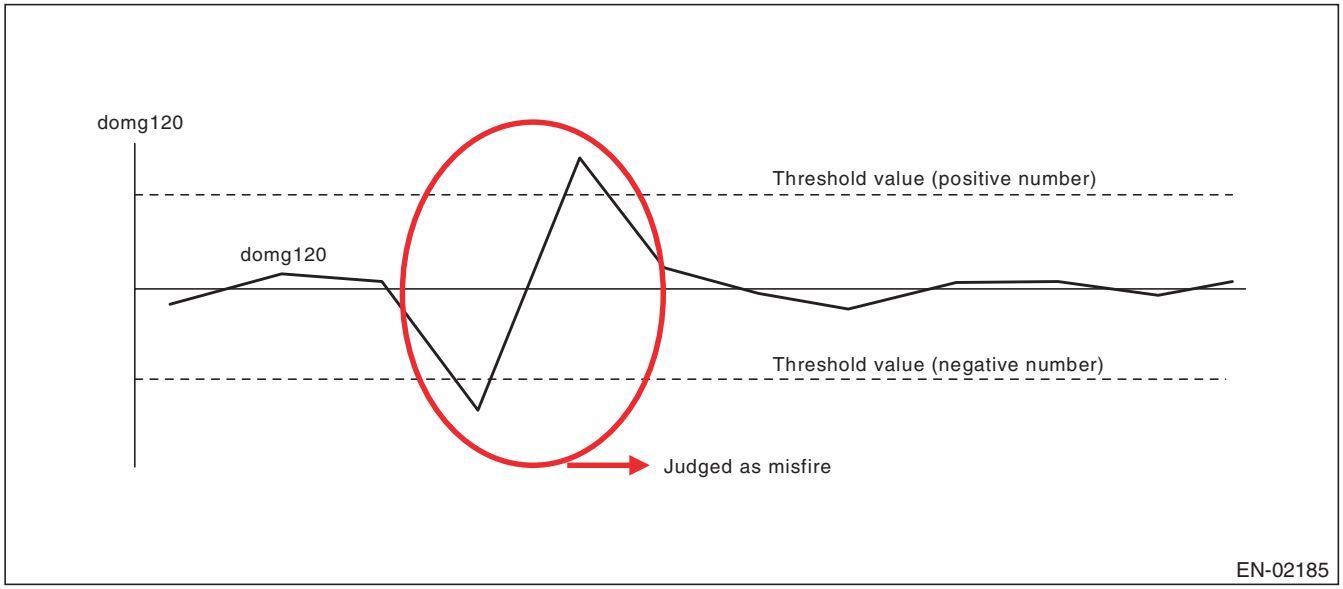

GETtheMANUALS.org

360° Interval Difference Method

Diagnostic value	domg 360 = (omg 1 – omg 0) – (omg 4 – omg 3)
Misfire judgment	domg 360 > Judgment value → Judge as misfire

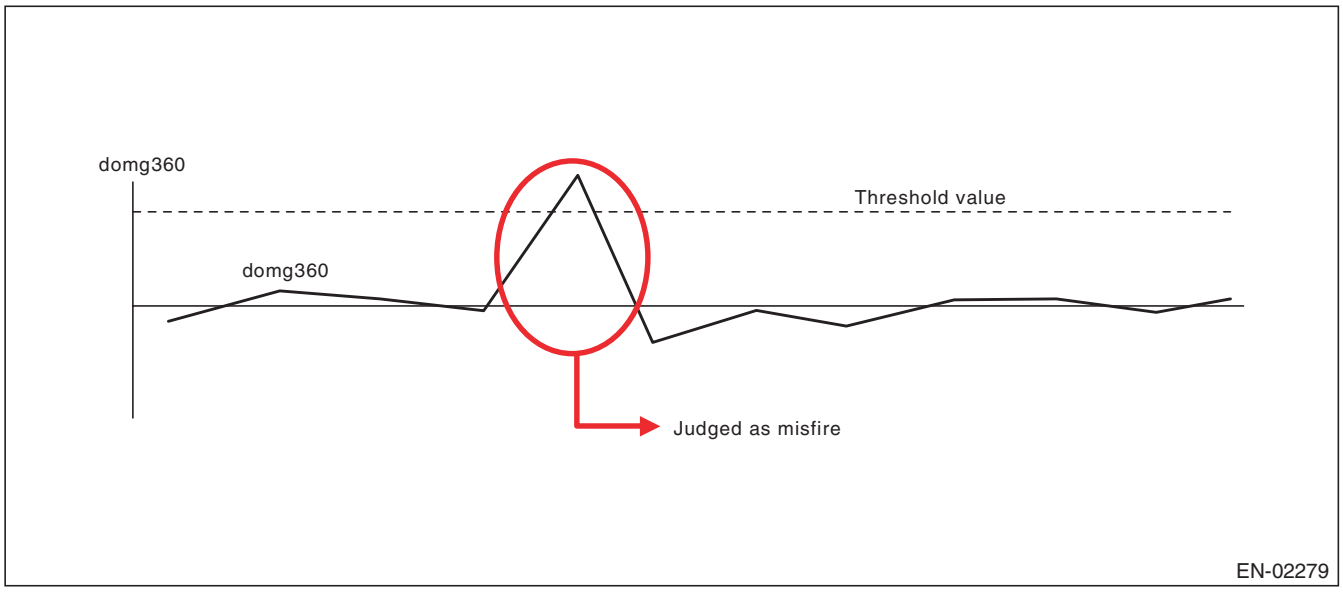

720° Interval Difference Method

Diagnostic value	domg 720 = (omg 1 – omg 0) – (omg 7 – omg 6)
Misfire judgment	domg 720 > Judgment value → Judge as misfire

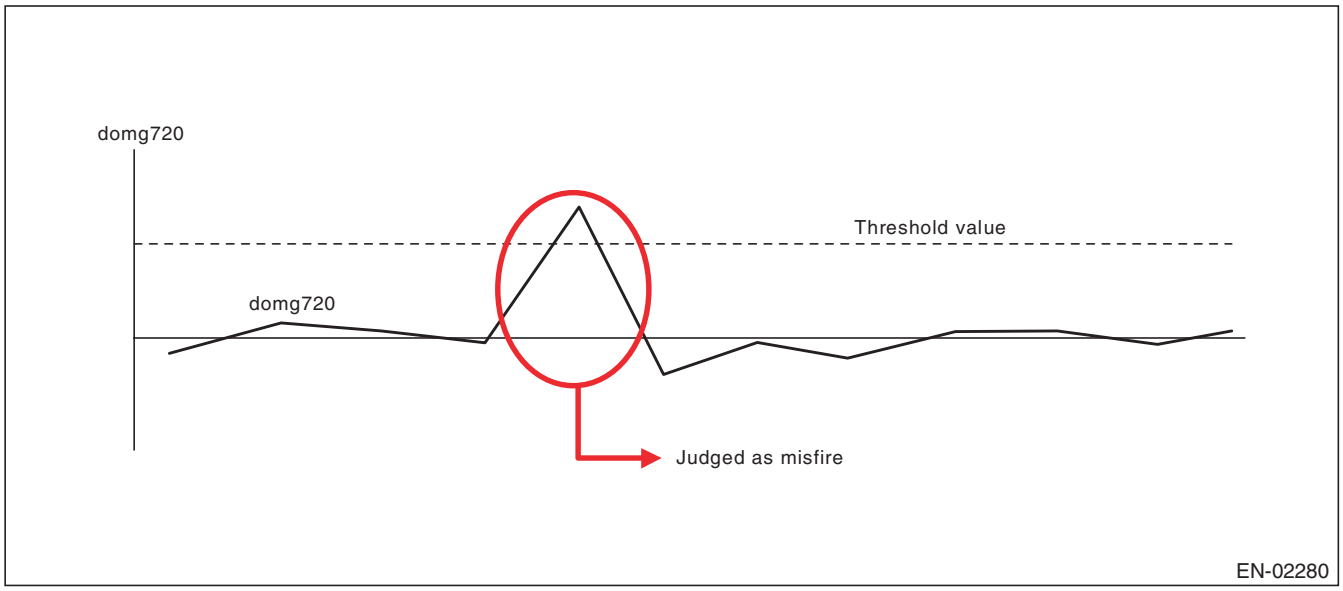

GETtheMANUALS.org

- **FTP 1.5 times misfire (Misfire occurrence level which influences exhaust gas)**
- **Abnormality Judgment**

Judgment Value (Judge that malfunction occurs when the misfire ratio is high in 1000 engine revs.)

Malfunction Criteria	Threshold Value
FTP emission diagnostic value	≥ 40 × 100/3000% in 1000 revs.

Time Needed for Diagnosis: 1000 engine revs.
Malfunction Indicator Light Illumination: Illuminates when malfunction occurs in 2 continuous driving cycles.

- **Normality Judgment**

Judgment Value

Malfunction Criteria	Threshold Value
FTP emission diagnostic value	< 40 × 100/3000% in 1000 revs.

Time Needed for Diagnosis: 1000 engine revs.

- **Catalyst damage misfire (Misfire occurrence level damaging catalyst)**
- **Abnormality Judgment**

Judgment Value

Malfunction Criteria	Threshold Value
Catalyst damage misfire diagnostic value	≥ Value from Map 3

Map 3

		Intake air (g(oz)/rev)									
		0.16 (0.01)	0.28 (0.01)	0.4 (0.01)	0.52 (0.02)	0.64 (0.02)	0.76 (0.03)	0.92 (0.03)	1.1 (0.04)	1.5 (0.05)	2 (0.07)
Engine speed (rpm)	650	150	150	150	150	150	120	96	72	72	72
	1000	150	150	150	120	120	120	78	36	36	36
	1500	150	150	120	120	120	85.5	54.6	40.2	40.2	40.2
	2000	120	120	120	120	120	66.6	40.2	40.2	40.2	40.2
	2500	102.75	102.75	102.9	87.3	87.3	53.4	40.2	40.2	40.2	40.2
	3000	85.8	85.8	85.8	54.6	54.6	40.2	40.2	40.2	40.2	40.2
	3500	70.02	70.02	63	45	42	30	30	30	30	30
	4000	54.6	54.6	40.2	30	30	30	30	30	30	30
	4500	42.3	42.3	30	30	30	30	30	30	30	30
	5000	30	30	30	30	30	30	30	30	30	30
	5500	30	30	30	30	30	30	30	30	30	30
	6000	30	30	30	30	30	30	30	30	30	30
	6400	30	30	30	30	30	30	30	30	30	30
	7000	30	30	30	30	30	30	30	30	30	30

Time Needed for Diagnosis: 200 engine revs.
Malfunction Indicator Light Illumination: Illuminates as soon as a malfunction occurs.

- **Normality Judgment**

Judgment Value

Malfunction Criteria	Threshold Value
Catalyst damage misfire diagnostic value	< Value of Map 3

Time Needed for Diagnosis: 200 engine revs.

GETtheMANUALS.org

CG:DTC P0302 CYLINDER 2 MISFIRE DETECTED

1. OUTLINE OF DIAGNOSIS

NOTE:
For the detection standard, refer to DTC P0301. <Ref. to GD(H6DO)-123, DTC P0301 CYLINDER 1 MISFIRE DETECTED, Diagnostic Trouble Code (DTC) Detecting Criteria.>

CH:DTC P0303 CYLINDER 3 MISFIRE DETECTED

1. OUTLINE OF DIAGNOSIS

NOTE:
For the detection standard, refer to DTC P0301. <Ref. to GD(H6DO)-123, DTC P0301 CYLINDER 1 MISFIRE DETECTED, Diagnostic Trouble Code (DTC) Detecting Criteria.>

CI: DTC P0304 CYLINDER 4 MISFIRE DETECTED

1. OUTLINE OF DIAGNOSIS

NOTE:
For the detection standard, refer to DTC P0301. <Ref. to GD(H6DO)-123, DTC P0301 CYLINDER 1 MISFIRE DETECTED, Diagnostic Trouble Code (DTC) Detecting Criteria.>

CJ:DTC P0305 CYLINDER 5 MISFIRE DETECTED

1. OUTLINE OF DIAGNOSIS

NOTE:
For the detection standard, refer to DTC P0301. <Ref. to GD(H6DO)-123, DTC P0301 CYLINDER 1 MISFIRE DETECTED, Diagnostic Trouble Code (DTC) Detecting Criteria.>

CK:DTC P0306 CYLINDER 6 MISFIRE DETECTED

1. OUTLINE OF DIAGNOSIS

NOTE:
For the detection standard, refer to DTC P0301. <Ref. to GD(H6DO)-123, DTC P0301 CYLINDER 1 MISFIRE DETECTED, Diagnostic Trouble Code (DTC) Detecting Criteria.>

GETtheMANUALS.org

CL:DTC P0327 KNOCK SENSOR 1 CIRCUIT LOW (BANK 1 OR SINGLE SENSOR)

1. OUTLINE OF DIAGNOSIS

Detect the open or short circuit of knock sensor.
Judge as NG if out of specification.

2. COMPONENT DESCRIPTION

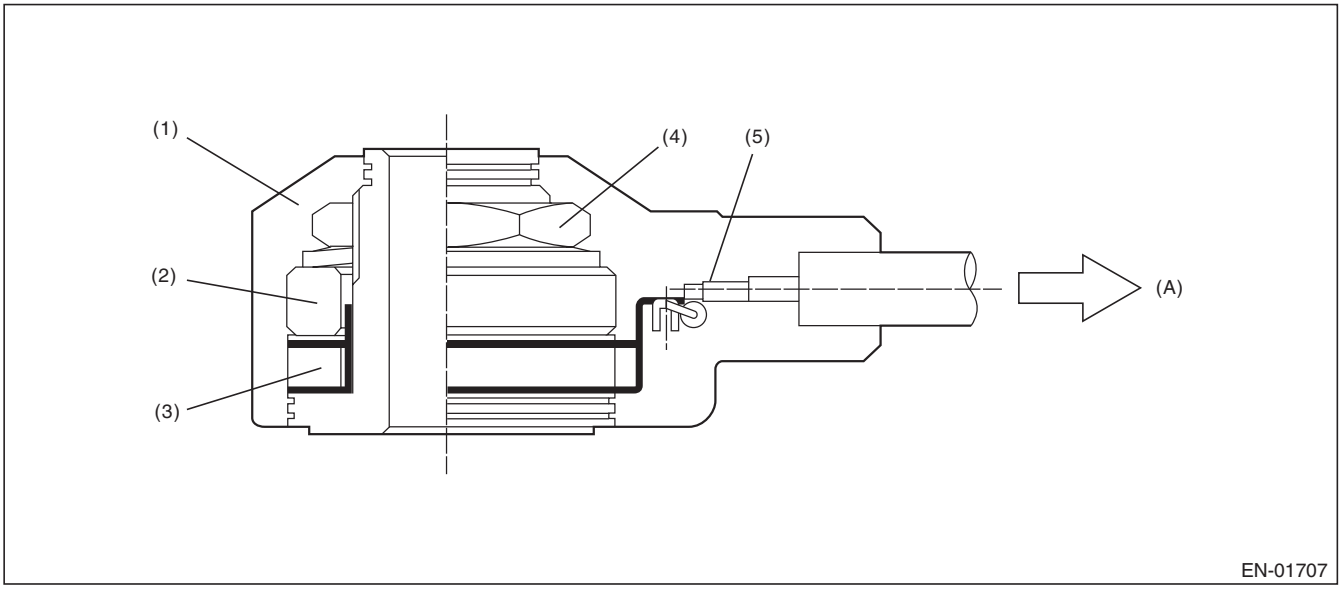

(A) To knock sensor harness

(1) Case
(2) Weight
(3) Piezoelectric element
(4) Nut
(5) Resistance

3. ENABLE CONDITION

Secondary Parameters	Enable Conditions
None	

4. GENERAL DRIVING CYCLE

Always perform the diagnosis continuously.

GETtheMANUALS.org

5. DIAGNOSTIC METHOD

- **Abnormality Judgment**

If the duration of time while the following conditions are met is longer than the time indicated, judge as NG.

Judgment Value

Malfunction Criteria	Threshold Value
Output voltage	< 0.243 V

Time Needed for Diagnosis: 1000 ms
Malfunction Indicator Light Illumination: Illuminates as soon as a malfunction occurs.

- **Normality Judgment**

Judge as OK and clear the NG if the continuous time while the following conditions are established is more than the predetermined time.

Judgment Value

Malfunction Criteria	Threshold Value
Output voltage	≥ 0.243 V

Time Needed for Diagnosis: Less than 1 second

GETtheMANUALS.org

CM:DTC P0328 KNOCK SENSOR 1 CIRCUIT HIGH (BANK 1 OR SINGLE SENSOR)

1. OUTLINE OF DIAGNOSIS

Detect the open or short circuit of knock sensor.
Judge as NG if out of specification.

2. COMPONENT DESCRIPTION

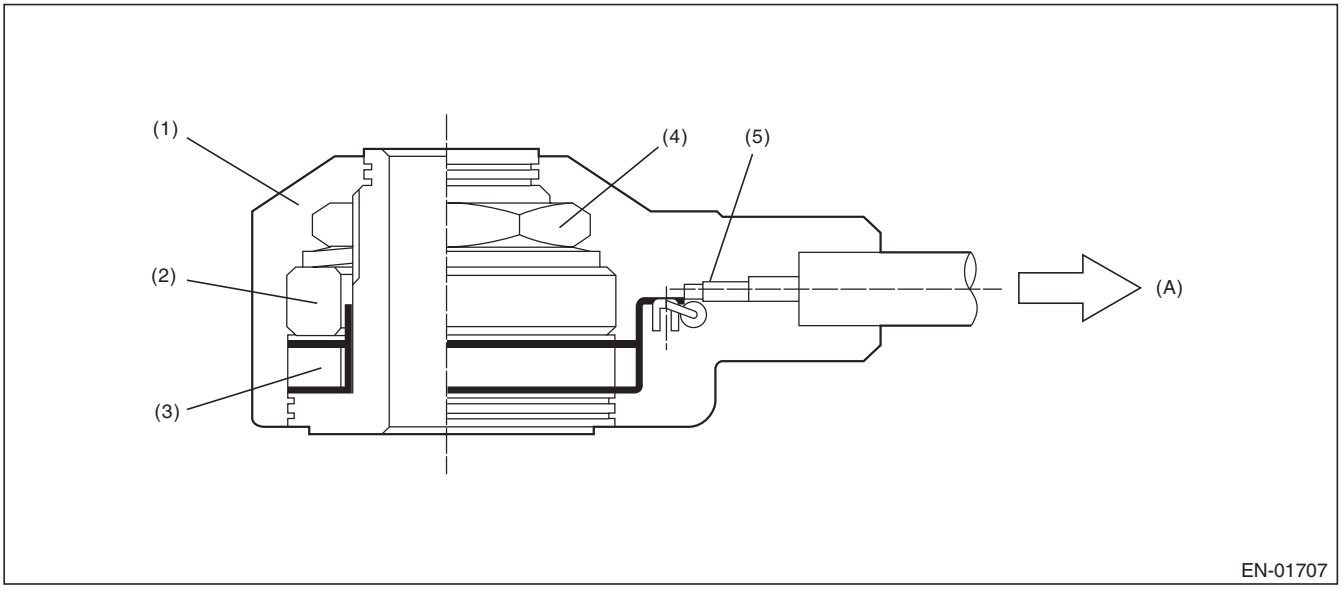

(A) To knock sensor harness

(1) Case
(2) Weight
(3) Piezoelectric element
(4) Nut
(5) Resistance

3. ENABLE CONDITION

Secondary Parameters	Enable Conditions
None	

4. GENERAL DRIVING CYCLE

Always perform the diagnosis continuously.

GETtheMANUALS.org

5. DIAGNOSTIC METHOD

- **Abnormality Judgment**

If the duration of time while the following conditions are met is longer than the time indicated, judge as NG.

Judgment Value

Malfunction Criteria	Threshold Value
Output voltage	≥ 4.709 V

Time Needed for Diagnosis: 1000 ms
Malfunction Indicator Light Illumination: Illuminates as soon as a malfunction occurs.

- **Normality Judgment**

Judge as OK and clear the NG if the continuous time while the following conditions are established is more than the predetermined time.

Judgment Value

Malfunction Criteria	Threshold Value
Output voltage	< 4.709 V

Time Needed for Diagnosis: Less than 1 second

CN:DTC P0332 KNOCK SENSOR 2 CIRCUIT LOW (BANK 2)

1. OUTLINE OF DIAGNOSIS

NOTE:
For the detection standard, refer to DTC P0327. <Ref. to GD(H6DO)-130, DTC P0327 KNOCK SENSOR 1 CIRCUIT LOW (BANK 1 OR SINGLE SENSOR), Diagnostic Trouble Code (DTC) Detecting Criteria.>

CO:DTC P0333 KNOCK SENSOR 2 CIRCUIT HIGH (BANK 2)

1. OUTLINE OF DIAGNOSIS

NOTE:
For the detection standard, refer to DTC P0328. <Ref. to GD(H6DO)-132, DTC P0328 KNOCK SENSOR 1 CIRCUIT HIGH (BANK 1 OR SINGLE SENSOR), Diagnostic Trouble Code (DTC) Detecting Criteria.>

GETtheMANUALS.org

CP:DTC P0335 CRANKSHAFT POSITION SENSOR “A” CIRCUIT

1. OUTLINE OF DIAGNOSIS

Detect the open or short circuit of the crankshaft position sensor.
Judge as NG when the crank signal is not input even though the starter was rotated.

2. COMPONENT DESCRIPTION

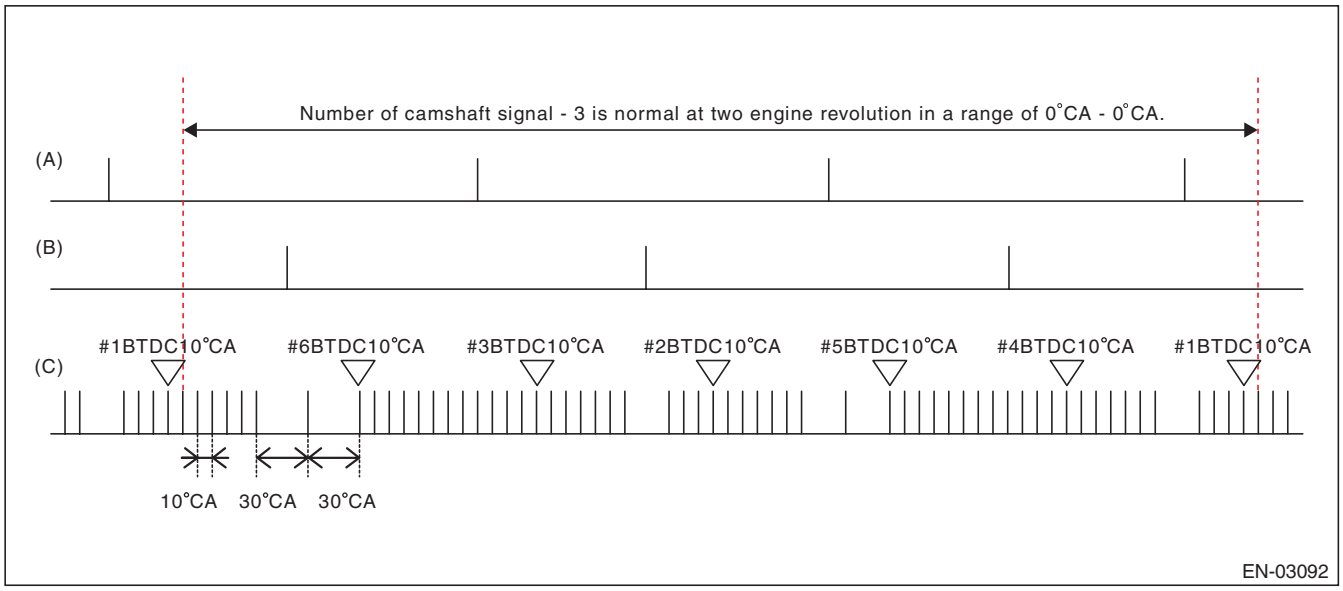

(A) Camshaft signal (RH) (B) Camshaft signal (LH) (C) Crankshaft signal

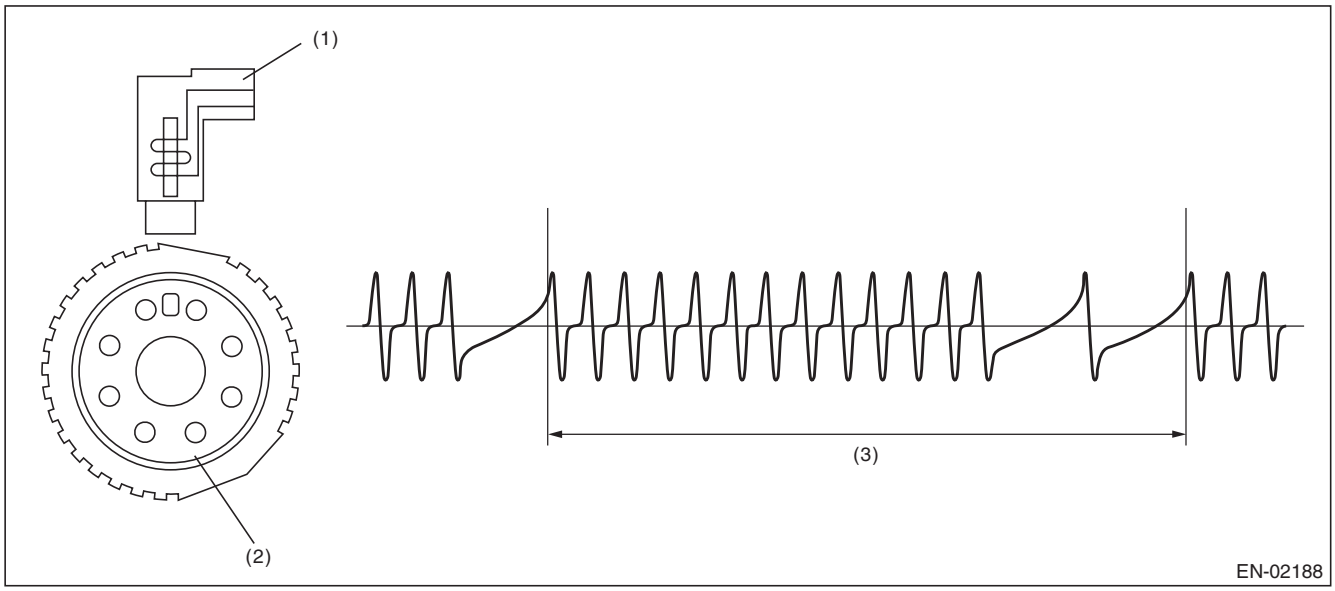

(1) Crankshaft position sensor (2) Crank sprocket (3) Crankshaft half-turn

3. ENABLE CONDITION

Secondary Parameters	Enable Conditions
None	

4. GENERAL DRIVING CYCLE

Always perform the diagnosis continuously.

GETtheMANUALS.org

5. DIAGNOSTIC METHOD

- **Abnormality Judgment**

If the duration of time while the following conditions are met is longer than the time indicated, judge as NG.

Judgment Value

Malfunction Criteria	Threshold Value
Starter switch	ON
Crankshaft position sensor signal	Not detected
Battery voltage	≥ 8 V

Time Needed for Diagnosis: 3000 ms
Malfunction Indicator Light Illumination: Illuminates as soon as a malfunction occurs.

- **Normality Judgment**

Judge as OK and clear the NG if the continuous time while the following conditions are established is more than the predetermined time.

Judgment Value

Malfunction Criteria	Threshold Value
Crankshaft position sensor signal	Input exists
Battery voltage	≥ 8 V

Time Needed for Diagnosis: Less than 1 second

GETtheMANUALS.org

CQ:DTC P0336 CRANKSHAFT POSITION SENSOR “A” CIRCUIT RANGE/PERFORMANCE

1. OUTLINE OF DIAGNOSIS

Detect for faults in crankshaft position sensor output properties.
Judge as NG when there is a problem in the number of crankshaft signals for every revolution of crankshaft.

2. COMPONENT DESCRIPTION

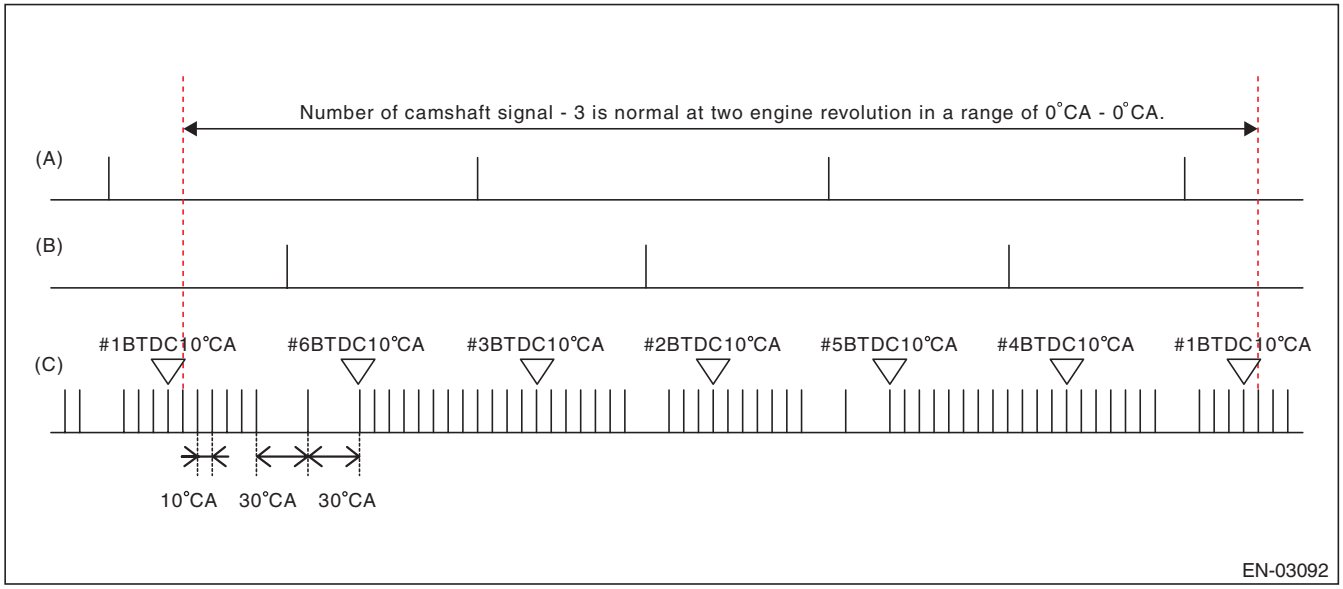

(A) Camshaft signal (RH) (B) Camshaft signal (LH) (C) Crankshaft signal

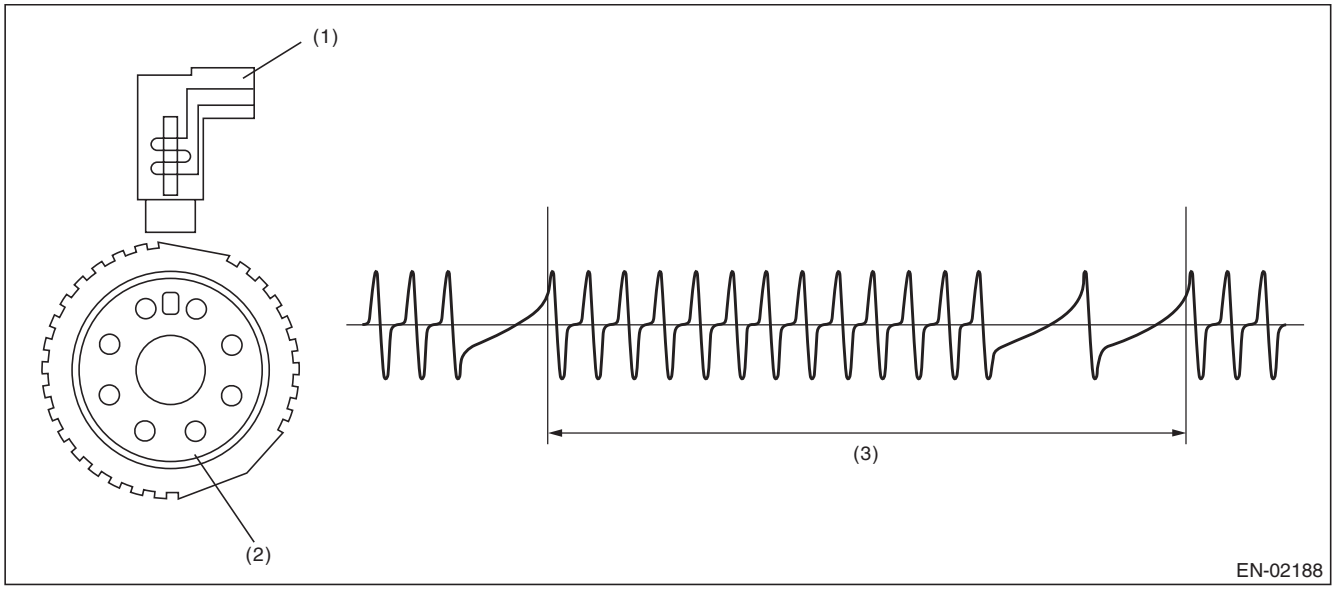

(1) Crankshaft position sensor (2) Crank sprocket (3) Crankshaft half-turn

3. ENABLE CONDITION

Secondary Parameters	Enable Conditions
Battery voltage	≥ 8 V
Engine speed	< 3000 rpm

GETtheMANUALS.org

4. GENERAL DRIVING CYCLE

Perform the diagnosis continuously under 3000 rpm engine speed.

5. DIAGNOSTIC METHOD

- **Abnormality Judgment**

Judge as NG when the following conditions are established.

Judgment Value

Malfunction Criteria	Threshold Value
Cylinder number identification	Completed
Amount of crank sensor signal during 1 rev of crankshaft.	Not = 30

Time Needed for Diagnosis: 10 engine revs. engine revs.
Malfunction Indicator Light Illumination: Illuminates when malfunction occurs in 2 continuous driving cycles.

- **Normality Judgment**

Judge as OK and clear the NG if the continuous time while the following conditions are established is more than the predetermined time.

Judgment Value

Malfunction Criteria	Threshold Value
Cylinder number identification	Completed
Amount of crank sensor signal during 1 rev of crankshaft.	= 30

Time Needed for Diagnosis: Less than 1 second

GETtheMANUALS.org

CR:DTC P0340 CAMSHAFT POSITION SENSOR “A” CIRCUIT (BANK 1 OR SINGLE SENSOR)

1. OUTLINE OF DIAGNOSIS

Detect the open or short circuit of the camshaft position sensor.
Judge as NG when the number of camshaft signals remains abnormal.

2. COMPONENT DESCRIPTION

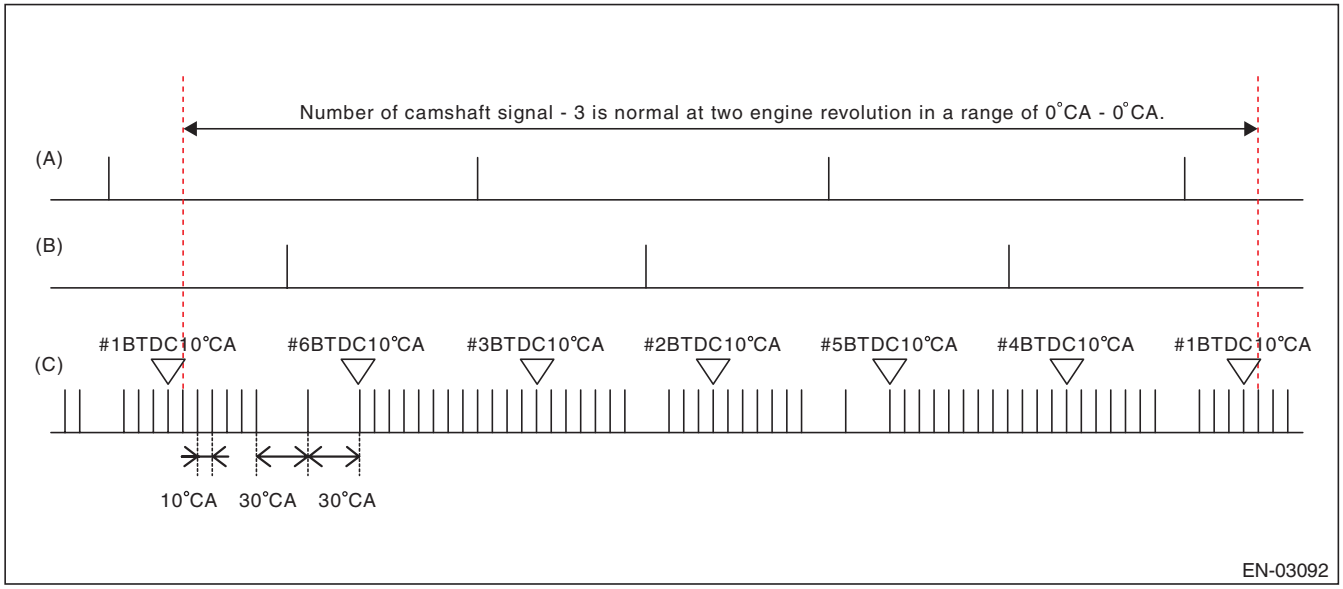

(A) Camshaft signal (RH) (B) Camshaft signal (LH) (C) Crankshaft signal

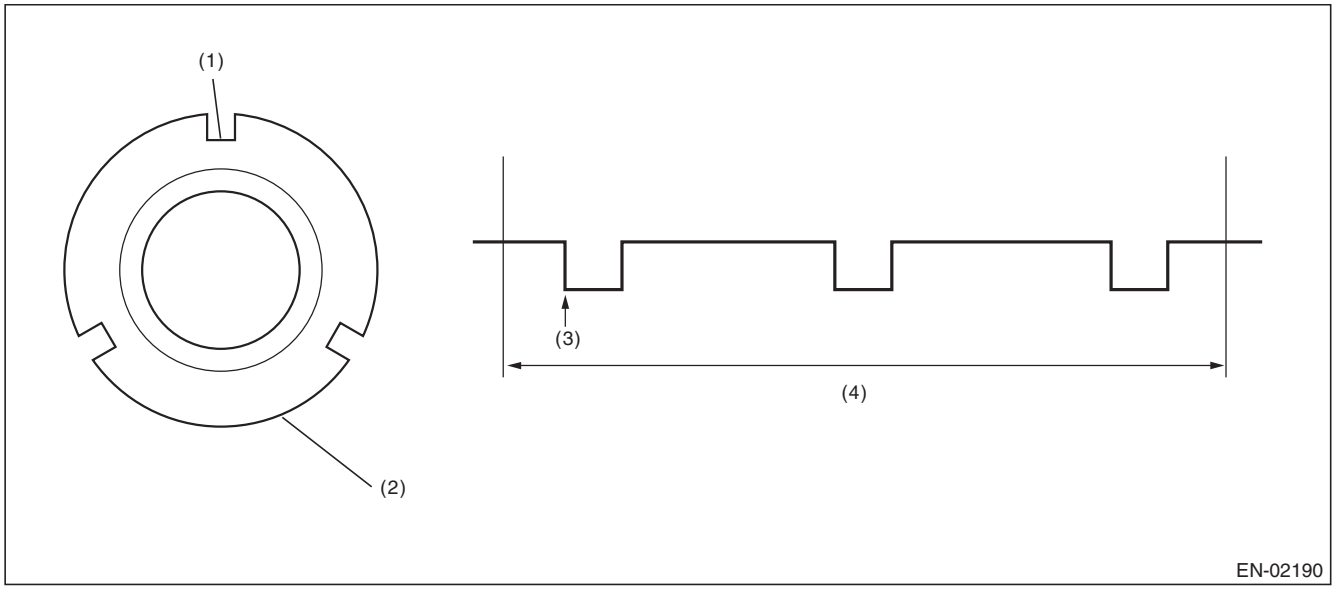

(1) Throttle
(2) Camshaft plate
(3) Detecting point
(4) Camshaft one revolution (crankshaft two revolutions)

3. ENABLE CONDITION

Secondary Parameters	Enable Conditions
Battery voltage	≥ 8 V

GETtheMANUALS.org

4. GENERAL DRIVING CYCLE

Always perform the diagnosis continuously.

5. DIAGNOSTIC METHOD

- **Abnormality Judgment 1**

Judge as NG when the condition where the number of camshaft position sensor signals are less than 3 times during 2 engine revs continues.

Judgment Value

Malfunction Criteria	Threshold Value
Amount of camshaft sensor signal during 2 revs.	< 3 time(s)

Time Needed for Diagnosis: Engine two revolutions × 4 time(s)
Malfunction Indicator Light Illumination: Illuminates as soon as a malfunction occurs.

- **Normality Judgment 1**

Judge as OK and clear the NG when the malfunction criteria below are met.

Judgment Value

Malfunction Criteria	Threshold Value
Camshaft position sensor signal	≥ 3 time(s)

Time Needed for Diagnosis: Two engine revolutions

- **Abnormality Judgment 2**

If the duration of time while the following conditions are met is longer than the time indicated, judge as NG.

Judgment Value

Malfunction Criteria	Threshold Value
Starter	ON
Camshaft position sensor signal	No input

Time Needed for Diagnosis: 3000 ms

- **Normality Judgment 2**

Judge as OK and clear the NG if the continuous time while the following conditions are established is more than the predetermined time.

Judgment Value

Malfunction Criteria	Threshold Value
Camshaft position sensor signal	Input exists

Time Needed for Diagnosis: Less than 1 second

GETtheMANUALS.org

CS:DTC P0345 CAMSHAFT POSITION SENSOR “A” CIRCUIT (BANK 2)

1. OUTLINE OF DIAGNOSIS

NOTE:
For the detection standard, refer to DTC P0340. <Ref. to GD(H6DO)-138, DTC P0340 CAMSHAFT POSITION SENSOR “A” CIRCUIT (BANK 1 OR SINGLE SENSOR), Diagnostic Trouble Code (DTC) Detecting Criteria.>

GETtheMANUALS.org

CT:DTC P0351 IGNITION COIL A PRIMARY/SECONDARY CIRCUIT

1. OUTLINE OF DIAGNOSIS

Based on the self-diagnostic result of the ignition coil driving IC, judge the ignition coil driving circuit as normal or abnormal.
The ignition coil driving IC detects “no ignition” status as a malfunction.

2. ENABLE CONDITIONS

Secondary Parameters	Enable Conditions
Battery voltage	≥ 10.9 V
Elapsed time after starting the engine	> 1 s
Engine speed	> 500 rpm
Ignition energization time	> 2000 μs
Ignition status	Not during ignition cut

3. GENERAL DRIVING CYCLE

Always perform the diagnosis continuously.

4. DIAGNOSTIC METHOD

- **Abnormality Judgment**

Judge as NG when the following conditions are established.

Judgment Value

Malfunction Criteria	Threshold Value
Ignition driving IC information	Malfunction

Time Needed for Diagnosis: 2500 ms
Malfunction Indicator Light Illumination: Illuminates as soon as a malfunction occurs.

- **Normality Judgment**

Judge as OK and clear the NG if the following conditions are established.

Judgment Value

Malfunction Criteria	Threshold Value
Ignition driving IC information	Normal

Time Needed for Diagnosis: Less than 1 second

GETtheMANUALS.org

CU:DTC P0352 IGNITION COIL B PRIMARY/SECONDARY CIRCUIT

1. OUTLINE OF DIAGNOSIS

NOTE:
For the detection standard, refer to DTC P0351. <Ref. to GD(H6DO)-141, DTC P0351 IGNITION COIL A PRIMARY/SECONDARY CIRCUIT, Diagnostic Trouble Code (DTC) Detecting Criteria.>

CV:DTC P0353 IGNITION COIL C PRIMARY/SECONDARY CIRCUIT

1. OUTLINE OF DIAGNOSIS

NOTE:
For the detection standard, refer to DTC P0351. <Ref. to GD(H6DO)-141, DTC P0351 IGNITION COIL A PRIMARY/SECONDARY CIRCUIT, Diagnostic Trouble Code (DTC) Detecting Criteria.>

CW:DTC P0354 IGNITION COIL D PRIMARY/SECONDARY CIRCUIT

1. OUTLINE OF DIAGNOSIS

NOTE:
For the detection standard, refer to DTC P0351. <Ref. to GD(H6DO)-141, DTC P0351 IGNITION COIL A PRIMARY/SECONDARY CIRCUIT, Diagnostic Trouble Code (DTC) Detecting Criteria.>

CX:DTC P0355 IGNITION COIL E PRIMARY/SECONDARY CIRCUIT

1. OUTLINE OF DIAGNOSIS

NOTE:
For the detection standard, refer to DTC P0351. <Ref. to GD(H6DO)-141, DTC P0351 IGNITION COIL A PRIMARY/SECONDARY CIRCUIT, Diagnostic Trouble Code (DTC) Detecting Criteria.>

CY:DTC P0356 IGNITION COIL F PRIMARY/SECONDARY CIRCUIT

1. OUTLINE OF DIAGNOSIS

NOTE:
For the detection standard, refer to DTC P0351. <Ref. to GD(H6DO)-141, DTC P0351 IGNITION COIL A PRIMARY/SECONDARY CIRCUIT, Diagnostic Trouble Code (DTC) Detecting Criteria.>

GETtheMANUALS.org

CZ:DTC P0365 CAMSHAFT POSITION SENSOR “B” CIRCUIT (BANK 1)

1. OUTLINE OF DIAGNOSIS

Detect the open or short circuit of the camshaft position sensor.
Judge as NG when the number of camshaft signals remains abnormal.

2. COMPONENT DESCRIPTION

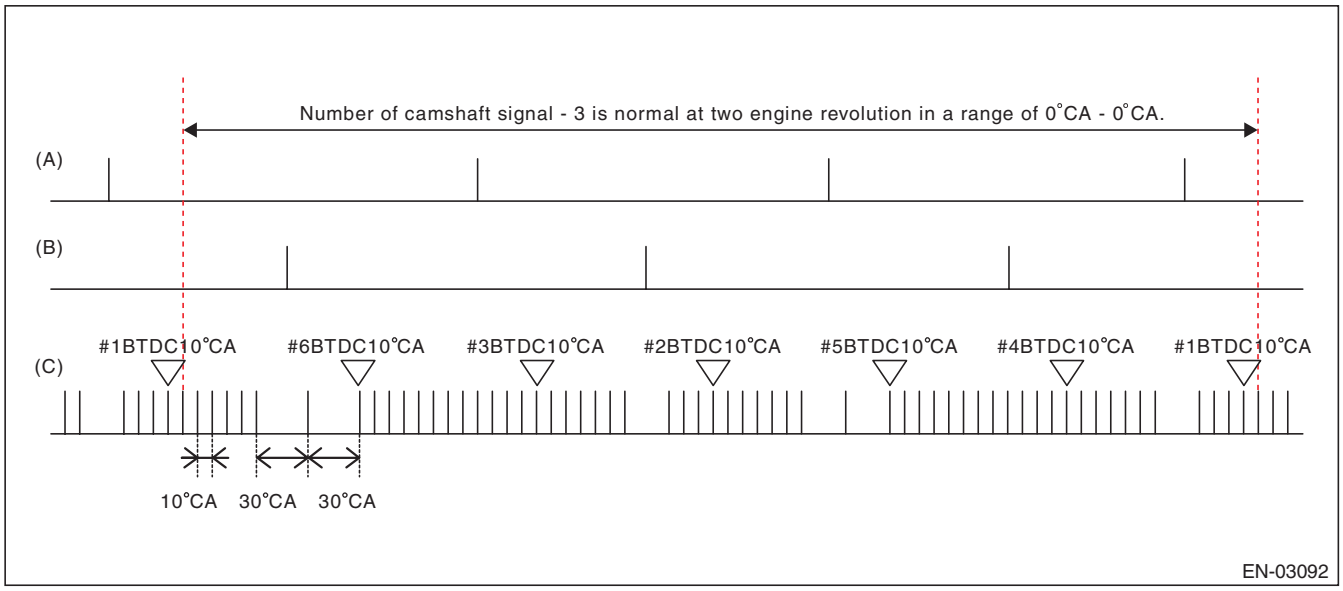

(A) Cam signal (RH) (B) Cam signal (LH) (C) Crankshaft signal

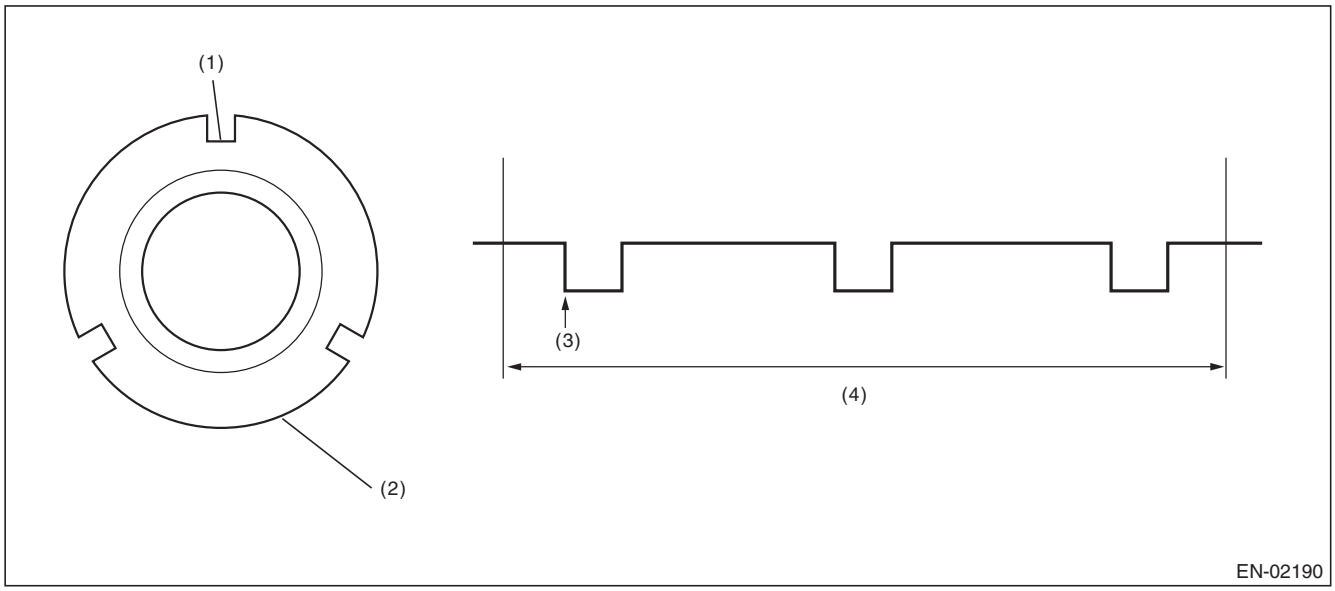

(1) Throttle
(2) Camshaft plate
(3) Detecting point
(4) Camshaft one revolution (crankshaft two revolutions)

3. ENABLE CONDITIONS

Secondary Parameters	Enable Conditions
Battery voltage	≥ 8 V

GETtheMANUALS.org

4. GENERAL DRIVING CYCLE

Always perform the diagnosis continuously.

5. DIAGNOSTIC METHOD

- **Abnormality Judgment**

Judge as NG when the status where the number of camshaft position sensor signal in two engine revolutions is less than 3 time(s).

Judgment Value

Malfunction Criteria	Threshold Value
Amount of camshaft sensor signal during 2 revs.	< 3 time(s)

Time Needed for Diagnosis: 2 engine revs. × 4 time(s)
Malfunction Indicator Light Illumination: Illuminates as soon as a malfunction occurs.

- **Normality Judgment**

Judge as OK and clear the NG when the malfunction criteria below are met.

Judgment Value

Malfunction Criteria	Threshold Value
Camshaft position sensor signal	≥ 3 time(s)

Time Needed for Diagnosis: Two engine revolutions

GETtheMANUALS.org

DA:DTC P0390 CAMSHAFT POSITION SENSOR “B” CIRCUIT (BANK 2)

1. OUTLINE OF DIAGNOSIS

NOTE:
For the detection standard, refer to DTC P0365. <Ref. to GD(H6DO)-143, DTC P0365 CAMSHAFT POSITION SENSOR “B” CIRCUIT (BANK 1), Diagnostic Trouble Code (DTC) Detecting Criteria.>

GETtheMANUALS.org

DB:DTC P0400 EXHAUST GAS RECIRCULATION FLOW

1. OUTLINE OF DIAGNOSIS

Detect EGR system malfunction.
Intake manifold pressure (negative pressure) is constant because the throttle valve is fully closed during deceleration fuel cut. At this time, when the EGR valve is opened/closed, the intake manifold pressure will change. EGR System OK/NG is judged by the range of this change.

2. COMPONENT DESCRIPTION

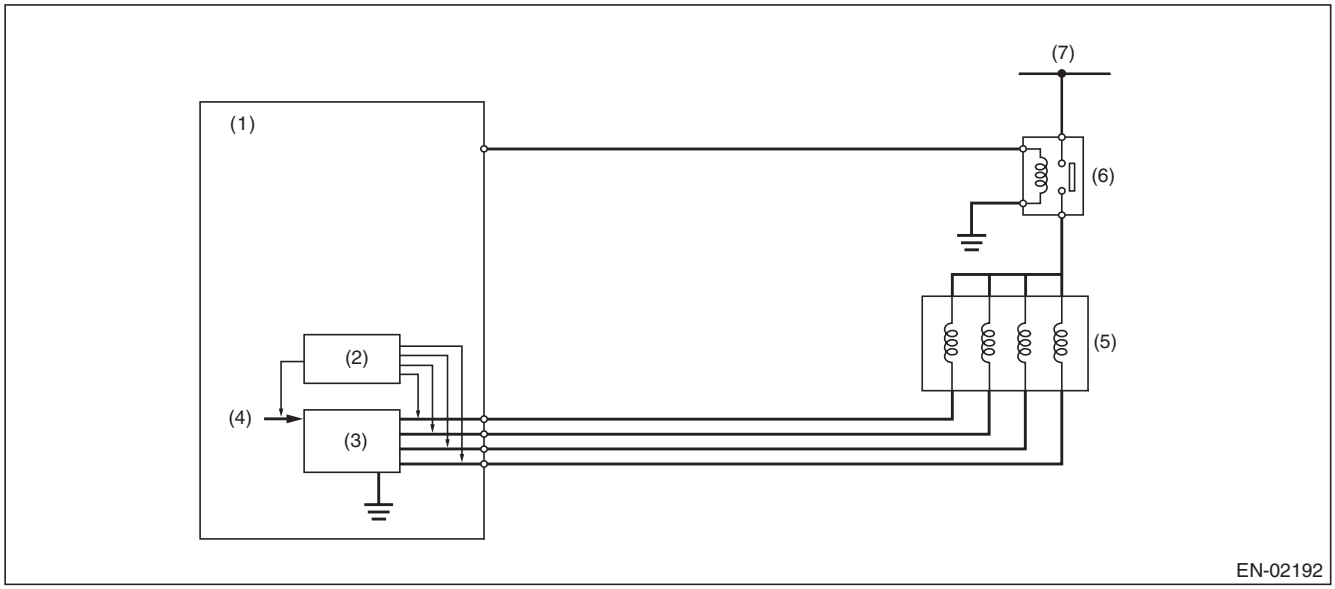

(1)	ECM	(4)	CPU	(6)	Main relay
(2)	Detecting circuit	(5)	EGR valve	(7)	Battery power supply
(3)	Switching circuit				

GETtheMANUALS.org

3. ENABLE CONDITION

Secondary Parameters	Enable Conditions
Elapsed time after starting the engine	≥ 40 s
Engine coolant temperature	≥ 75 °C(167 °F)
Engine speed	1200 rpm — 3250 rpm
Intake manifold pressure (absolute pressure)	< 46.7 kPa (350 mmHg, 13.8 inHg)
Ambient air temperature	≥ 5 °C(41 °F)
Throttle position	< 0.25 °
Battery voltage	≥ 10.9 V
Atmospheric pressure	≥ 75 kPa (563 mmHg, 22.2 inHg)
Vehicle speed	≥53 km/h (32.9 MPH)
Fuel shut-off function	In operation
Neutral switch	OFF
After neutral switch ON/OFF change	≥ Value from Map
No load change (A/C, power steering, lighting, rear defogger, heater fan and radiator fan)	≥ 5000 ms

Map

Engine coolant temperature °C (°F)	–40 (–40)	–30 (–22)	–20 (–4)	–10 (14)	0 (32)	10 (50)	20 (68)	30 (86)
After neutral switch change msec	0	0	0	0	0	0	0	0

Engine coolant temperature °C (°F)	40 (104)	50 (122)	60 (140)	70 (158)	80 (176)	90 (194)	100 (212)	110 (230)
After neutral switch change msec	0	0	0	0	0	0	0	0

4. GENERAL DRIVING CYCLE

During deceleration fuel cut from 53 km/h (approx. 33 MPH) or more, perform diagnosis once.
Be careful of vehicle speed and engine speed. (Diagnosis will not be completed if the vehicle speed and engine speed conditions become out of specification due to deceleration.)

5. DIAGNOSTIC METHOD

Measure the pressure values when the enable conditions are established, and perform diagnosis by calculating those results.
1. Label the intake manifold pressure value as PMOF1, which is observed when enable conditions are established, and set the EGR target step to 50 steps (nearly full open).
2. Label the intake manifold pressure value as PMON, which is observed after one second has passed since EGR target step was set to 50 steps (when the enable conditions were established), and set the EGR target step to 0.
3. Label the intake manifold pressure as PMOF2, which is observed after one second has passed since EGR target step was set to 0 (after two seconds have passed since the enable conditions were established).

- **Abnormality Judgment**

Judge as NG when the following conditions are established.

Judgment Value

Malfunction Criteria	Threshold Value
PMON – (PMOF1 + PMOF2)/2	< 1.6 kPa (11.8 mmHg, 0.5 inHg)

Time Needed for Diagnosis: 1 time

GETtheMANUALS.org

Malfunction Indicator Light Illumination: Illuminates when malfunction occurs in 2 continuous driving cycles.

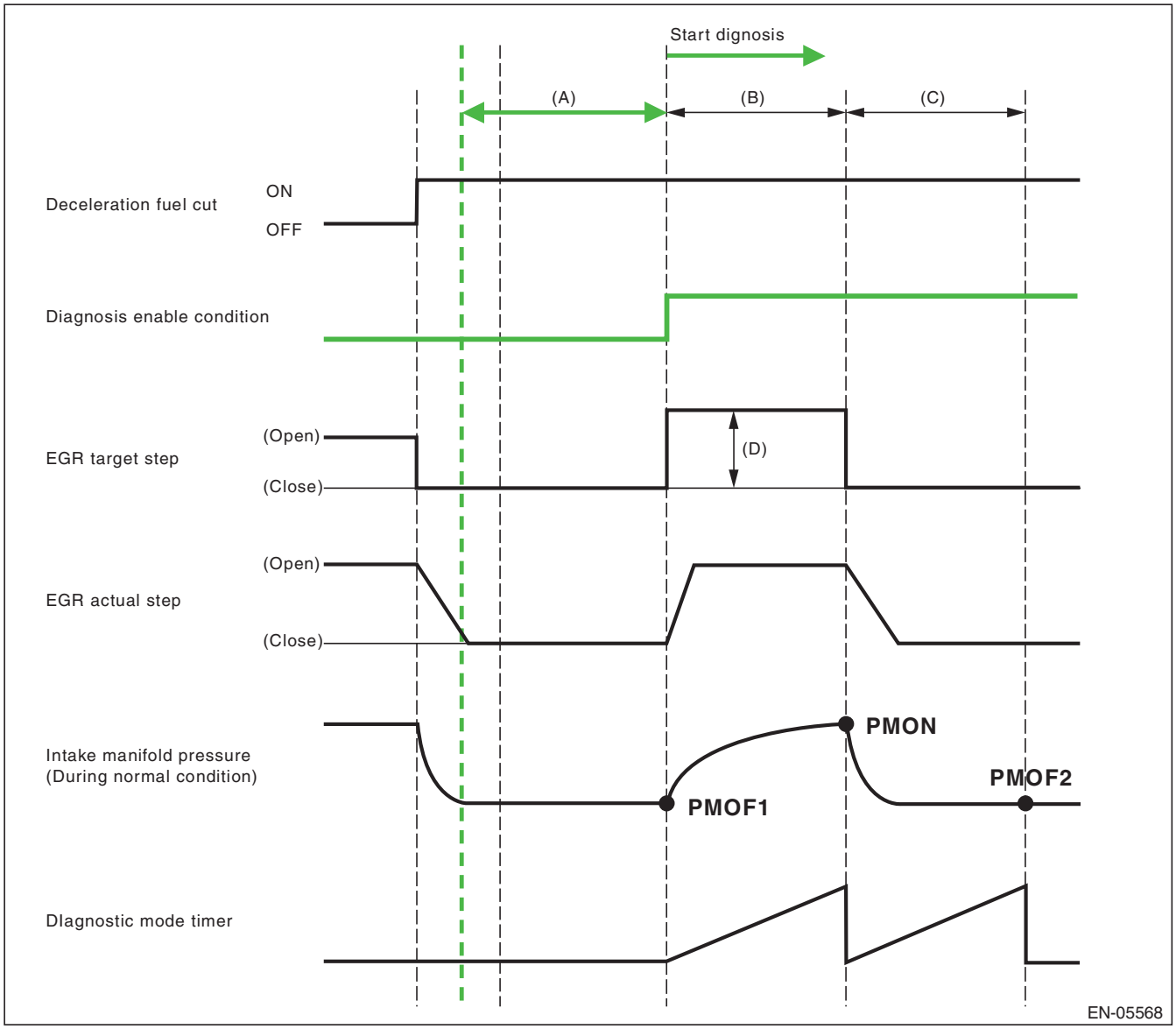

(A) 2000 ms (B) 1500 ms (C) 1500 ms
(D) 50 step(s)

- **Normality Judgment**

Judge as OK and clear the NG if the following conditions are established.

Judgment Value

Malfunction Criteria	Threshold Value
PMON – (PMOF1 + PMOF2)/2	≥ 1.6 kPa (11.8 mmHg, 0.5 inHg)

Time Needed for Diagnosis: 1 time

GETtheMANUALS.org

DC:DTC P0420 CATALYST SYSTEM EFFICIENCY BELOW THRESHOLD (BANK 1)

1. OUTLINE OF DIAGNOSIS

Detect the deterioration of the catalyst function.
Though the front oxygen sensor output would change slowly with a new catalyst, the sensor output with a deteriorated catalyst becomes high and the inversion time is shortened.
For this reason, the catalyst diagnosis is carried out by monitoring the front oxygen sensor output and comparing it with the front oxygen (A/F) sensor output.

2. COMPONENT DESCRIPTION

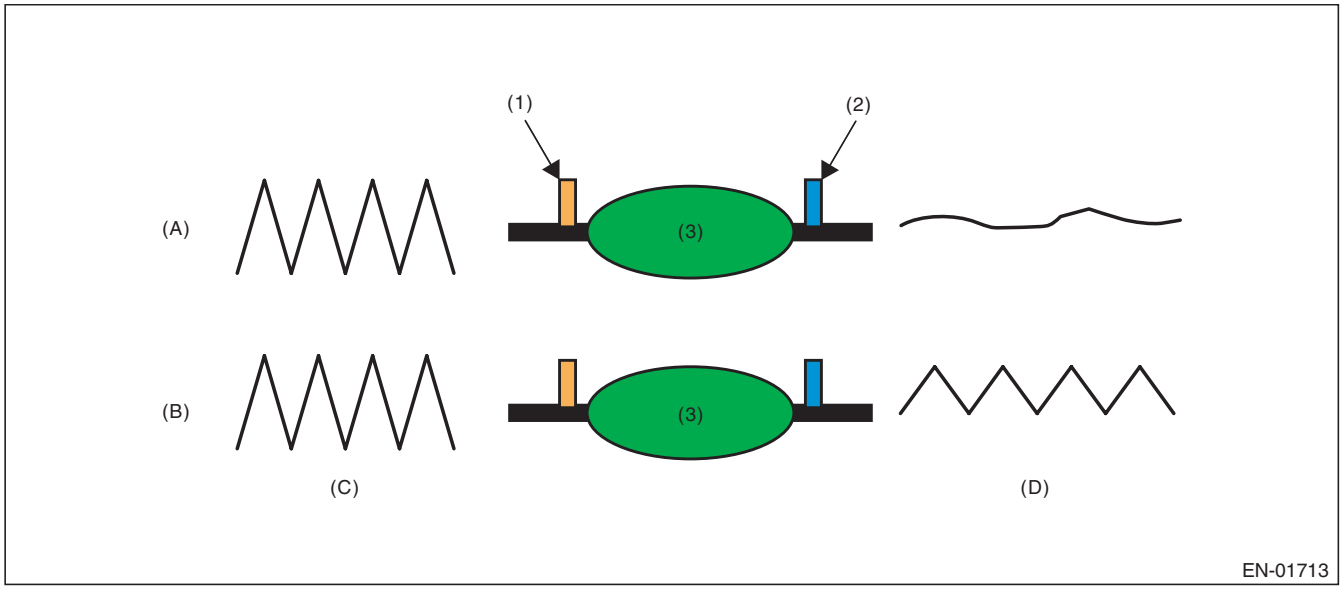

(A)	Normal	(B)	Deterioration	(C)	Output waveform from the front oxygen (A/F) sensor
(D)	Output waveform from the front oxygen sensor				
(1)	Front oxygen (A/F) sensor	(2)	Front oxygen sensor	(3)	Catalytic converter

GETtheMANUALS.org

3. ENABLE CONDITION

Secondary Parameters	Enable Conditions
Battery voltage	≥ 10.9 V
Atmospheric pressure	≥ 75 kPa (563 mmHg, 22.2 inHg)
Engine coolant temperature	≥ 75 °C (167 °F)
Estimated catalyst temperature	≥ 540 °C (1004 °F)
Misfire detection every 200 rotations	< 65535 time(s)
Learning value of evaporation gas density	< 0.2
Sub feedback	In operation
Evaporative system diagnosis	Not in operation
Time of difference (< 0.10) between actual lambda and target lambda	≥ 1000 ms
Vehicle speed	> 60 km/h (37.3 MPH)
Amount of intake air	≥ 10 g/s (0.35 oz/s) and < 50 g/s (1.76 oz/s)
Engine load change every 0.5 engine revs.	< 0.02 g/rev (0 oz/rev)
Rear oxygen output change from 660 mV or less to 660 mV or more	Experienced after fuel cut
Elapsed time after starting the engine	≥ 220 s
Purge execution calculated time	≥ 5 s

4. GENERAL DRIVING CYCLE

Perform the diagnosis only once at a constant 60 km/h (37.3 MPH) or higher.

5. DIAGNOSTIC METHOD

After establishing the execution conditions, calculate the front oxygen (A/F) sensor lambda deviation cumulative value per 32 milliseconds × 4 (Σ |(sglmd$_n$ – sglmd$_{n-1}$)|) and rear oxygen sensor output voltage deviation cumulative value (Σ |(ro2sad$_n$ – ro2sad$_{n-1}$)|), and when the front oxygen (A/F) sensor lambda deviation cumulative value (Σ |(sglmd$_n$ – sglmd$_{n-1}$)|) becomes the predetermined value or more, calculate the diagnostic value.

- **Abnormality Judgment**

If the duration of time while the following conditions are met is within the time indicated, judge as NG.

Judgment Value

Malfunction Criteria	Threshold Value
Σ |(ro2sad$_n$ – ro2sad$_{n-1}$)| / Σ |(sglmd$_n$ – sglmd$_{n-1}$)|	> 18 (Bin5 model) > 16 (ULEV model)

Time Needed for Diagnosis: 30 — 55 seconds
Malfunction Indicator Light Illumination: Illuminates when malfunction occurs in 2 continuous driving cycles.

- **Normality Judgment**

Judge as OK and clear the NG if the continuous time while the following conditions are established is within the predetermined time.

Judgment Value

Malfunction Criteria	Threshold Value
Σ |(ro2sad$_n$ – ro2sad$_{n-1}$)| / Σ |(sglmd$_n$ – sglmd$_{n-1}$)|	≤ 18 (Bin5 model) ≤ 16 (ULEV model)

Time Needed for Diagnosis: 30 — 55 seconds

GETtheMANUALS.org

DD:DTC P0442 EVAPORATIVE EMISSION CONTROL SYSTEM LEAK DETECTED (SMALL LEAK)

1. OUTLINE OF DIAGNOSIS

The evaporative system monitor detects leak up to 0.020 inch in the fuel tank and evaporative emissions system. If the fuel cap is not present or has not been correctly tightened after a refueling event, a malfunction is also detected. These malfunctions are detected by monitoring the fuel tank and system pressure during an intrusive pull-down pressure test. Pull down is accomplished via the purge valve while the engine is running. Monitors run during the first idle after engine start and while driving.
The diagnostic is classified into two monitors. The first monitor detects a 0.040 inch leak, fuel cap loose/off, and canister purge valve stuck open/close whilst the other monitor detects a 0.020 inch leak when the vehicle is moving or during the first idle. Failures, DTCs and monitor methods are as follows.

P0457	Fuel cap loose/off or CPC valve stuck open/close	Monitor 1
P0442	0.040 inch leak	Monitor 1
P0456	0.020 inch leak	Monitor 2

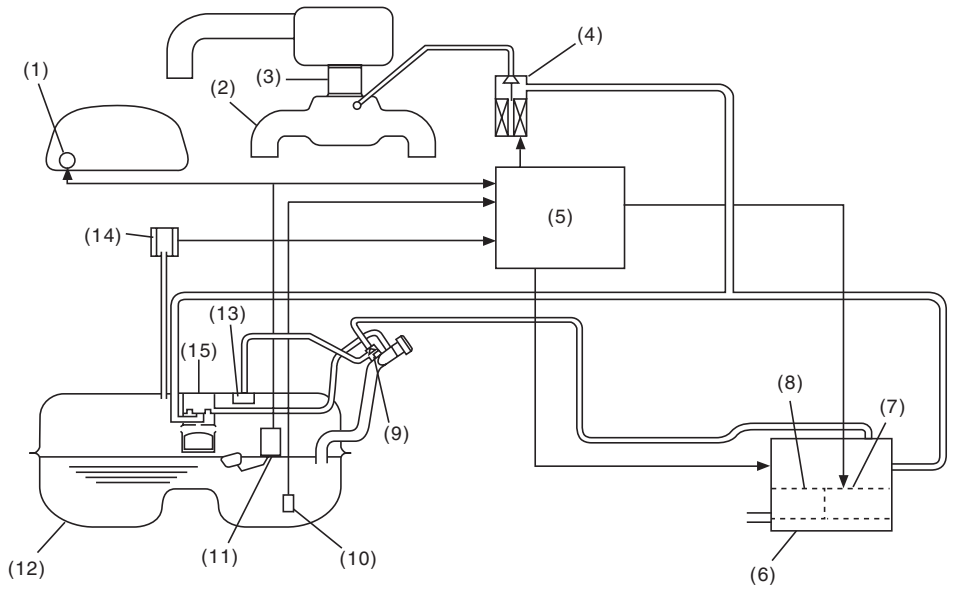

(1)	Fuel gauge	(6)	Canister	(11)	Fuel level sensor
(2)	Intake manifold	(7)	Drain valve (CCV)	(12)	Fuel tank
(3)	Throttle body	(8)	Drain filter	(13)	Fuel cut valve
(4)	Purge control solenoid valve (CPC valve)	(9)	Shut-off valve	(14)	Fuel tank pressure sensor
(5)	Engine control module (ECM)	(10)	Fuel temperature sensor	(15)	Vent valve

GETtheMANUALS.org

Monitor 1

- **P0457 Fuel cap loose/off or CPC valve stuck open/close**
- **P0442 0.040 inch leak check**

This monitor detects CPC valve stuck open/close, fuel cap loose/off, and 0.040 inch leak in the evaporative emission system by monitoring the fuel tank system pressure an intrusive pull-down pressure test. The monitor consists of Modes Z, A, B, C and D. There are three judgment times for these malfunctions. CPC valve stuck open is performed in Mode Z, CPC valve stuck closed or fuel cap loose/off is in Mode B, 0.040 inch leak is in Mode D.

Mode	Description of each mode	Required time for each mode
Mode Z (Monitoring of CPC stuck open)	CPC valve: Closed CCV: Closed The system requires 3000 ms to measure the pressure difference. (1) Pressure difference < 0.9 kPa (6.5 mmHg, 0.3 inHg) → Judged as “Fail of CPC stuck open” **[P0457]** (2) Pressure difference ≥ 0.4 kPa (3 mmHg, 0.1 inHg) → Move to Mode A	3000 ms
Mode A (Estimation of Evap. Generation)	The system requires 10000 ms to measure the pressure increase (evpp1), and then move to Mode B.	10000 ms
Mode B (Negative Pressure Introduction/ Monitoring of Fuel cap off or CPC stuck close)	CPC valve: Open Negative pressure is introduced to the fuel tank. (1) Elapsed time in Mode B ≥ 10000 ms and (Minimum tank pressure) – (Initial tank pressure) > –0.5 kPa (–4 mmHg, –0.2 inHg) → Judged as “Fail of Fuel cap off or CPC stuck close” **[P0457]** (2) Elapsed time in Mode B ≥ 10000 ms + 25000 ms → Judged as “Fail of Fuel cap off or CPC stuck close” **[P0457]** (3) Fuel tank pressure ≤ –1.4 kPa (–10.5 mmHg, –0.4 inHg) → Move to Mode C	Average: 7 s (Depends on the tank condition)
Mode C (Keeping Negative Pressure / Pass in Mode C)	CPC valve: Closed When the tank pressure comes up to the target pressure (–1.3 kPa (–9.75 mmHg, –0.4 inHg)), the monitor moves to Mode D. If the fuel tank pressure does not exceed the –1.3 kPa (–9.75 mmHg, –0.4 inHg) after 14013 ms, the system judges as “Pass in Mode C” and moves to “Final Judgment”.	Average: 7 s (Depends on the tank condition)
Mode D (Pressure Measurement / Pass Fail in Mode D)	The monitor requires 10000 ms to measure the pressure change (evpp2) and calculates the monitor value (evpp2 – 1.5 × evpp1), where Mode A (evpp1) is the generated vapor pressure. The calculated value (evpp2 – 1.5 × evpp1) is then compared to a calibrated threshold table as a function of fuel temperature and fuel level. The system judges as a “Pass/Fail in Mode D” and then moves to “Final Judgment”. (1) evpp2 – 1.5 × evpp1 > Fail Threshold (Map 1) → “Fail in Mode D” (2) evpp2 – 1.5 × evpp1 ≤ Pass Threshold (Map 1) → “Pass in Mode D”	10000 ms
Final Judgment (Pass / Fail)	The monitor is completed in the following order (1) Judged as “Fail in Mode D” → “Fail of 0.040 inch leak” **[P0442]** (2) Judged as “Pass in Mode C / Mode D” → “Pass of 0.040 inch leak”	0.128 s

GETtheMANUALS.org

Map 1 (Threshold value for 0.040 inch leak)

		Fuel temperature (°C (°F))			
		15 (59)	25 (77)	35 (95)	45 (113)
Fuel Level ℓ (US gal, Imp gal)	10.5 (2.77, 2.31)	0.3 (2.1, 0.1)	0.3 (2.1, 0.1)	0.3 (2.3, 0.1)	0.3 (2.4, 0.1)
	27 (7.13, 5.94)	0.3 (2.32, 0.1)	0.3 (2.5, 0.1)	0.4 (2.73, 0.1)	0.4 (2.88, 0.1)
	43 (11.36, 9.46)	0.4 (2.88, 0.1)	0.4 (2.97, 0.1)	0.4 (3.23, 0.1)	0.5 (3.43, 0.1)
	59.5 (15.72, 13.09)	0.5 (3.5, 0.1)	0.5 (3.5, 0.1)	0.5 (3.5, 0.1)	0.5 (3.7, 0.1)
kPa (mmHg, inHg)					

Monitor 2

P0456 0.020 inch leak check

This monitor detects a very small leak (0.020 inch) in the evaporative emissions system by monitoring the fuel tank and system pressure during an intrusive pull-down pressure test. Pull down is accomplished via the purge valve while the engine is running. The monitor runs during the first idle after engine start and also while the vehicle is running.

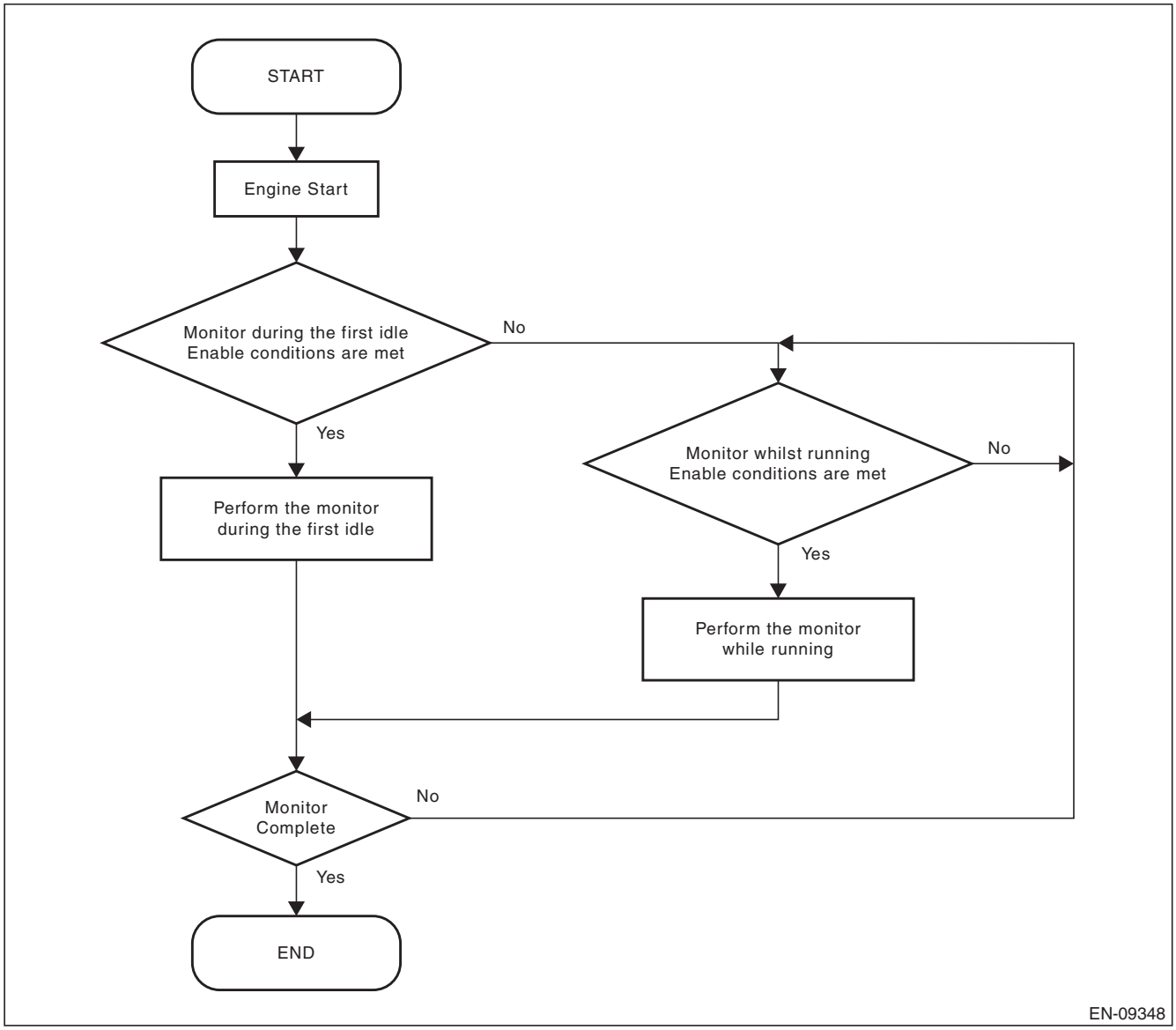

GETtheMANUALS.org

Monitor 2 (first idle condition)

Mode	Description of each mode	Required time for each mode
Mode A (Estimation of Evap. Generation)	CPC valve: Closed CCV: Closed Low vapor flag At the beginning of the monitor test when; → Fuel temperature is lower than Map 2 listed value → Intake air temperature is lower than Map 3 listed value The system sets “Low vapor flag = ON”. Low vapor flag is used in Mode A, Mode C, and Mode D. The system measures the generated vapor pressure increase (△P1) in the specific time period (*1), and then moves to Mode B. (*1) Low vapor flag OFF: 10000 ms, Low vapor flag ON: 128 ms	Low vapor flag OFF 10000 ms Low vapor flag ON 128 ms
Mode B (Negative Pressure Introduction)	CPC valve: Open Negative pressure is introduced to the fuel tank via engine manifold vacuum. When the fuel tank pressure reaches the target pressure (–1.3 kPa (–10 mmHg, –0.4 inHg)), the monitor moves to Mode C.	Average: 13 s (Depends on the tank condition)
Mode C (Keeping Negative Pressure / Pass in Mode C)	CPC valve: Closed After a calibrated time period (*2) has elapsed since the tank pressure comes up to the target pressure (–1.3 kPa (–10 mmHg, –0.4 inHg)), move to Mode D. If the fuel tank pressure does not exceed the target pressure (–1.3 kPa (–10 mmHg, –0.4 inHg)) after Map 4 (ms), the system is judged as “Pass in Mode C” and moves to “Final Judgment”. (*2) Low vapor flag OFF: 10000 ms, Low vapor flag ON: 2000 ms	Low vapor flag OFF Average: 21 s Low vapor flag ON Average: 10 s (Depends on the tank condition)
Mode D (Pressure Measurement / Fail or Pass in Mode D)	The monitor requires 10000 ms to measure the pressure change (△P2) and calculates the monitor value (△P2-△P1), where Mode A (△P1) is the generated vapor pressure. The calculated value (△P2-△P1) is then compared to a calibrated threshold table as a function of fuel temperature and fuel level. The system judges as a “Pass/Fail in Mode D” and then moves to “Final Judgment”. (1) △P2 – △P1 > Fail Threshold (*3) → “Fail in Mode D” (2) △P2 – △P1 ≤ Pass Threshold (*4) → “Pass in Mode D” (*3) Low vapor flag OFF: Map 5, Low vapor flag ON: Map 7 (*4) Low vapor flag OFF: Map 6, Low vapor flag ON: Map 8	10000 ms
Final Judgment (Pass / Fail)	The monitor is completed in the following order (1) Judged as “Fail in Mode D” → “Fail of 0.020 inch leak” **[P0456]** (2) Judged as “Pass in Mode C / Mode D” → “Pass of 0.020 inch leak”	0.128 s

Map 2 (Fuel temperature threshold for “Low vapor flag”)

Fuel Level ℓ (US gal, Imp gal)	10.5 (2.77, 2.31)	35 (9.25, 7.7)	59.5 (15.72, 13.09)
Fuel temperature threshold °C (°F)	5 (41)	10 (50)	15 (59)

Map 3 (intake air temperature threshold for “Low Vapor Flag”)

Fuel Level ℓ (US gal, Imp gal)	10.5 (2.77, 2.31)	35 (9.25, 7.7)	59.5 (15.72, 13.09)
Intake air temperature threshold °C (°F)	5 (41)	10 (50)	15 (59)

GETtheMANUALS.org

Map 4 (Period for judgment of Pass in Mode C)

Fuel Level ℓ (US gal, Imp gal)	10.5 (2.77, 2.31)	35 (9.25, 7.7)	50 (13.21, 11)	59.5 (15.72, 13.09)
Period for Pass in Mode C (ms)	23000	16000	12000	9500

Map 5 (Threshold value for 0.020 inch leak in Mode D under normal condition)

		Fuel temperature (°C (°F))									
		0 (32)	10 (50)	15 (59)	20 (68)	25 (77)	30 (86)	35 (95)	40 (104)	45 (113)	50 (122)
Fuel Level ℓ (US gal, Imp gal)	10.5 (2.77, 2.31)	0.1 (0.70, 0)	0.1 (0.70, 0)	0.1 (0.70, 0)	0.1 (0.70, 0)	0.1 (0.90, 0)	0.1 (1.10, 0)	0.1 (1.10, 0)	0.1 (1.10, 0)	0.1 (1.10, 0)	0.1 (1.10, 0)
	35 (9.25, 7.7)	0.1 (0.80, 0)	0.1 (0.80, 0)	0.1 (0.80, 0)	0.1 (0.80, 0)	0.1 (1.00, 0)	0.2 (1.20, 0)	0.2 (1.20, 0)	0.2 (1.20, 0)	0.2 (1.20, 0)	0.2 (1.20, 0)
	59.5 (15.72, 13.09)	0.1 (0.90, 0)	0.1 (0.90, 0)	0.1 (0.90, 0)	0.1 (0.90, 0)	0.1 (1.10, 0)	0.2 (1.30, 0.1)	0.2 (1.30, 0.1)	0.2 (1.30, 0.1)	0.2 (1.30, 0.1)	0.2 (1.30, 0.1)
kPa (mmHg, inHg)											

Map 6 (Threshold value for Pass in Mode D under normal conditions)

		Fuel temperature (°C (°F))									
		0 (32)	10 (50)	15 (59)	20 (68)	25 (77)	30 (86)	35 (95)	40 (104)	45 (113)	50 (122)
Fuel Level ℓ (US gal, Imp gal)	10.5 (2.77, 2.31)	0.1 (0.60, 0)	0.1 (0.60, 0)	0.1 (0.60, 0)	0.1 (0.60, 0)	0.1 (0.60, 0)	0.1 (0.60, 0)	0.1 (0.60, 0)	0.1 (0.60, 0)	0.1 (0.60, 0)	0.1 (0.60, 0)
	35 (9.25, 7.7)	0.1 (0.60, 0)	0.1 (0.60, 0)	0.1 (0.60, 0)	0.1 (0.60, 0)	0.1 (0.60, 0)	0.1 (0.60, 0)	0.1 (0.60, 0)	0.1 (0.60, 0)	0.1 (0.60, 0)	0.1 (0.60, 0)
	59.5 (15.72, 13.09)	0.1 (0.80, 0)	0.1 (0.80, 0)	0.1 (0.80, 0)	0.1 (0.80, 0)	0.1 (0.80, 0)	0.1 (0.80, 0)	0.1 (0.80, 0)	0.1 (0.80, 0)	0.1 (0.80, 0)	0.1 (0.80, 0)
kPa (mmHg, inHg)											

Map 7 (Threshold value for 0.020 inch leak in Mode D with under low vapor conditions)

		Fuel temperature (°C (°F))			
		0 (32)	10 (50)	15 (59)	20 (68)
Fuel Level ℓ (US gal, Imp gal)	10.5 (2.77, 2.31)	0.1 (0.80, 0)	0.1 (0.80, 0)	0.1 (0.80, 0)	0.1 (0.80, 0)
	35 (9.25, 7.7)	0.1 (0.90, 0)	0.1 (0.90, 0)	0.1 (0.90, 0)	0.1 (0.90, 0)
	59.5 (15.72, 13.09)	0.1 (1, 0)	0.1 (1, 0)	0.1 (1, 0)	0.1 (1, 0)
kPa (mmHg, inHg)					

Map 8 (Threshold value for Pass in Mode D with under low vapor conditions)

		Fuel temperature (°C (°F))			
		0 (32)	10 (50)	15 (59)	20 (68)
Fuel Level ℓ (US gal, Imp gal)	10.5 (2.77, 2.31)	0.1 (0.60, 0)	0.1 (0.60, 0)	0.1 (0.60, 0)	0.1 (0.60, 0)
	35 (9.25, 7.7)	0.1 (0.7, 0)	0.1 (0.7, 0)	0.1 (0.7, 0)	0.1 (0.7, 0)
	59.5 (15.72, 13.09)	0.1 (0.80, 0)	0.1 (0.80, 0)	0.1 (0.80, 0)	0.1 (0.80, 0)
kPa (mmHg, inHg)					

GETtheMANUALS.org

Monitor 2 (vehicle running condition)

Mode	Description of each mode	Required time for each mode
Mode A-1 (Zero adjust)	CPC valve: Closed Fuel tank pressure is adjusted to zero. If the fuel tank pressure is close to the ambient pressure, the system waits 5000 ms for stabilization of the tank pressure prior to moving to Mode A-2.	Average: 7 s (Depends on the tank condition)
Mode A-2 (Estimation of Evap. Generation)	CCV: Closed The system requires 30000 ms to measure the pressure increase (P1), and then move to Mode B.	30000 ms
Mode B (Negative Pressure Introduction)	CPC valve: Open Negative pressure is introduced to the fuel tank via engine manifold vacuum. When the fuel tank pressure reaches the target pressure (–2 kPa (–15 mmHg, –0.6 inHg)), the monitor moves to Mode C.	Average: 22 s (Depends on the tank condition)
Mode C (Keeping Negative Pressure)	CPC valve: Closed When the tank pressure comes up to target pressure (–2 kPa (–15 mmHg, –0.6 inHg)) or the calibrated period (Map 9) has passed, move to Mode D.	Average: 5 s (Depends on the tank condition)
Mode D (Pressure Measurement / Pass Fail in Mode D)	The system calculates the integrated pressure change (ptepap1sum) which is compensated by “P1” (the generated vapor pressure), ptepap1sum (n) = ptepap1sum (n–1) + ptepap1 – (–2 kPa (–15 mmHg, –0.6 inHg)) ptepap1 = (Fuel tank pressure) – (“P1”) / (Mode A-2 time) × (Elapsed time in Mode D) When the calibrated period (Map 10) has passed or the tank pressure reaches the Ambient pressure (0 kPa (0 mmHg, 0 inHg)), the system compares the monitor value (ptepap1sum) to a calibrated threshold table as a function of elapsed time in Mode D and fuel level. The system judges as “Pass/Fail in Mode D” and then moves to “Final Judgment”. (1) ptepap1sum > Fail Threshold (Map 11) → “Fail in Mode D” (2) ptepap1sum ≤ Pass Threshold (Map 12) → “Pass in Mode D”	Average: 134 s (Depends on the tank condition)
Final Judgment (Pass / Fail)	The monitor is completed in the following order (1) Judged as “Fail in Mode D” → Fail of 0.020 inch leak **[P0456]** (2) Judged as “Pass in Mode D” → Pass of 0.020 inch leak	0.128 s

Map 9 (Maximum time of Mode C)

Fuel Level ℓ (US gal, Imp gal)	10.5 (2.77, 2.31)	27 (7.13, 5.94)	43 (11.36, 9.46)	59.5 (15.72, 13.09)
Maximum time of Mode C (ms)	21208	19288	9742	8057

Map 10 (Maximum time of Mode D)

Fuel Level ℓ (US gal, Imp gal)	10.5 (2.77, 2.31)	35 (9.25, 7.7)	60 (15.85, 13.2)
Maximum time of Mode D (ms)	210000	153000	92000

GETtheMANUALS.org

Map 11 (Threshold value for 0.020 inch leak in Mode D)

		Elapsed time in Mode D (ms)							
		15104	30080	45056	60032	75008	89984	104960	119936
Fuel Level ℓ (US gal, Imp gal)	10.5 (2.77, 2.31)	12.9 (97 , 3.8)	46.2 (347 , 13.6)	95.8 (719 , 28.3)	160.2 (1202 , 47.3)	238.2 (1787 , 70.3)	328.5 (2464 , 97)	430.3 (3228 , 127.1)	542.9 (4073 , 160.4)
	35 (9.25, 7.7)	17.6 (132 , 5.2)	62.3 (467 , 18.4)	128.8 (966 , 38)	213.7 (1603 , 63.1)	314.8 (2361 , 93)	430.4 (3229 , 127.1)	559.3 (4196 , 165.2)	700.2 (5252 , 206.8)
	60 (15.85, 13.2)	23.9 (179 , 7.1)	85.8 (644 , 25.4)	178.4 (1338 , 52.7)	296.5 (2225 , 87.6)	436.5 (3274 , 128.9)	594.8 (4462 , 175.7)	768.5 (5766 , 227)	954.5 (7161 , 281.9)
kPa (mmHg, inHg)									

		Elapsed time in Mode D (ms)						
		135040	150016	164992	179968	194944	209920	225024
Fuel Level ℓ (US gal, Imp gal)	10.5 (2.77, 2.31)	667.3 (5006 , 197.1)	799.9 (6000.557386, 236.2)	941.4 (7062.512067, 278.1)	1091.6 (8188.783117, 322.4)	1248.9 (9368.900911, 368.9)	1413.1 (10601.09904, 417.4)	1585.2 (11891.64027, 468.2)
	35 (9.25, 7.7)	852.9 (6399 , 251.9)	1014.1 (7607.513887, 299.5)	1183.7 (8880.01467, 349.6)	1360.8 (10208.32601, 401.9)	1544.8 (11588.8928, 456.3)	1734.4 (13010.99648, 512.2)	1930.4 (14481.68432, 570.1)
	60 (15.85, 13.2)	1151.6 (8639 , 340.1)	1353.7 (10155.06483, 399.8)	1560 (11702.76626, 460.7)	1768.6 (13267.6991, 522.3)	1978.5 (14842.44065, 584.3)	2186.7 (16404.00719, 645.8)	2394.6 (17963.98126, 707.2)
kPa (mmHg, inHg)								

Map 12 (Threshold value for Pass in Mode D)

		Elapsed time in Mode D (ms)							
		15104	30080	45056	60032	75008	89984	104960	119936
Fuel Level ℓ (US gal, Imp gal)	10.5 (2.77, 2.31)	11.1 (83 , 3.3)	39.9 (300 , 11.8)	82.8 (621 , 24.5)	138.5 (1039 , 40.9)	205.8 (1544 , 60.8)	283.9 (2130 , 83.8)	371.8 (2789 , 109.8)	469.2 (3520 , 138.6)
	35 (9.25, 7.7)	15.2 (114 , 4.5)	53.8 (404 , 15.9)	111.3 (835 , 32.9)	184.7 (1385 , 54.5)	272 (2041 , 80.3)	372 (2790 , 109.9)	483.4 (3626 , 142.8)	605.1 (4539 , 178.7)
	60 (15.85, 13.2)	20.7 (155 , 6.1)	74.2 (557 , 21.9)	154.1 (1156 , 45.5)	256.3 (1922 , 75.7)	377.2 (2830 , 111.4)	514.1 (3856 , 151.8)	664.2 (4983 , 196.2)	824.9 (6188 , 243.6)
kPa (mmHg, inHg)									

		Elapsed time in Mode D (ms)						
		135040	150016	164992	179968	194944	209920	225024
Fuel Level ℓ (US gal, Imp gal)	10.5 (2.77, 2.31)	576.7 (4326 , 170.3)	691.2 (5186 , 204.2)	813.6 (6103 , 240.3)	943.3 (7077 , 278.6)	1079.3 (8097 , 318.8)	1221.2 (9161 , 360.7)	1369.9 (10277 , 404.6)
	35 (9.25, 7.7)	737.1 (5530 , 217.7)	876.4 (6574 , 258.8)	1023 (7674 , 302.1)	1176 (8822 , 347.3)	1335 (10015 , 394.3)	1498.8 (11244 , 442.7)	1668.3 (12515 , 492.7)
	60 (15.85, 13.2)	995.2 (7466 , 293.9)	1169.8 (8776 , 345.5)	1348.1 (10114 , 398.2)	1528.4 (11466 , 451.4)	1709.8 (12827 , 505)	1889.7 (14176 , 558.1)	2069.4 (15524 , 611.2)
kPa (mmHg, inHg)								

GETtheMANUALS.org

2. ENABLE CONDITION

Monitor 1

Secondary Parameters	Enable Conditions
Battery voltage	≥ 10.9 V
Ambient pressure	≥ 75 kPa (563 mmHg, 22.2 inHg)
Fuel tank pressure	≥ –4 kPa (–30 mmHg, –1.2 inHg) and < 2.7 kPa (20 mmHg, 0.8 inHg)
Elapsed time after previous EVAP monitor was finished/canceled	≥ 230000 ms
Total time of canister purge operation	≥ 120000 ms
Learning value of EVAP concentration	< 0.08
Engine speed	≥ 1050 rpm and < 4000 rpm
Intake manifold vacuum (= ambient pressure – intake manifold pressure)	≥ 13.3 kPa (100 mmHg, 3.9 inHg)
Vehicle speed	≥ 32 km/h (19.9 MPH)
Closed loop air fuel ratio control	Active
Fuel temperature	< 45 °C (113 °F)
Intake air temperature	≥ –10 °C (14 °F)
Fuel level	≥ 10.5 ℓ (2.77 US gal, 2.31 Imp gal) and < 59.5 ℓ (15.72 US gal, 13.09 Imp gal)

Monitor 2 (first idle condition)

Secondary Parameters	Enable Conditions
Battery voltage	≥ 10.9 V
Ambient pressure	≥ 75 kPa (563 mmHg, 22.2 inHg)
Soak time	≥ 18000 s
Accumulated intake air mass after engine start	≥ Map 13
Closed loop air fuel ratio control	Active
Fuel level	≥ 10.5 ℓ (2.77 US gal, 2.31 Imp gal) and < 59.5 ℓ (15.72 US gal, 13.09 Imp gal)
Fuel temperature	< 35 °C (95 °F)
Fuel tank pressure	≥ –0.7 kPa (–5.106 mmHg, –0.2 inHg) and < 0.7 kPa (5.106 mmHg, 0.2 inHg)
Adapted fuel tank pressure	≥ –0.3 kPa (–2.507 mmHg, –0.1 inHg) and < 0.3 kPa (2.507 mmHg, 0.1 inHg)
Engine speed	≥ 1000 rpm and < 2000 rpm
Intake manifold vacuum (= ambient pressure – intake manifold pressure)	≥ 13.3 kPa (100 mmHg, 3.9 inHg)
Vehicle speed	< 2 km/h (1.2 MPH)
Idle switch	ON
Intake air temperature	≥ –10 °C (14 °F)

GETtheMANUALS.org

Monitor 2 (vehicle running condition)

Secondary Parameters	Enable Conditions
Battery voltage	≥ 10.9 V
Ambient pressure	≥ 75 kPa (563 mmHg, 22.2 inHg)
Elapsed time after previous EVAP monitor was finished/canceled	≥ 60000 ms
Total time of canister purge operation	≥ 120000 ms
Fuel temperature	< 55 °C (131 °F)
Fuel level	≥ 10.5 ℓ (2.77 US gal, 2.31 Imp gal) and < 59.5 ℓ (15.72 US gal, 13.09 Imp gal)
Intake air temperature	≥ –10 °C (14 °F)
Vehicle speed	≥ 30 km/h (18.6 MPH)
All conditions below are satisfied	≥ 5000 ms
• Fuel tank pressure	≥ –0.7 kPa (–5 mmHg, –0.2 inHg) and < 0.4 kPa (2.9 mmHg, 0.1 inHg)
• Engine speed	≥ 1050 rpm and < 4000 rpm
• Intake manifold vacuum (= ambient pressure – intake manifold pressure)	≥ 8 kPa (60 mmHg, 2.4 inHg)
• Closed loop air fuel ratio control	Active
• Short term fuel trim	> 0.9
• Fuel level with large smoothing coefficient – Fuel level with small smoothing coefficient	< Map 14
• Learning value of EVAP density	< 0.08

Map 13 (Accumulated intake air mass after engine start)

Engine coolant temperature at start °C (°F)	–10 (14)	0 (32)	10 (50)	20 (68)	30 (86)	40 (104)	50 (122)	60 (140)	70 (158)
Accumulated intake air mass after engine start g (oz)	420 (14.81)	420 (14.81)	420 (14.81)	400 (14.11)	350 (12.34)	260 (9.17)	200 (7.05)	180 (6.35)	180 (6.35)

Map 14 (Threshold value the fuel slosh detection)

Fuel Level ℓ (US gal, Imp gal)	10 (2.64, 2.2)	20 (5.28, 4.4)	25 (6.61, 5.5)	30 (7.93, 6.6)	43 (11.36, 9.46)	45 (11.89, 9.9)	50 (13.21, 11)	60 (15.85, 13.2)
Fuel level change for detection of fuel slosh ℓ (US gal, Imp gal)	5 (1.32, 1.1)	5 (1.32, 1.1)	5 (1.32, 1.1)	5 (1.32, 1.1)	5 (1.32, 1.1)	5 (1.32, 1.1)	6 (1.59, 1.32)	8 (2.11, 1.76)

GETtheMANUALS.org

3. GENERAL DRIVING CYCLE

Monitor 1

Perform the diagnosis when the cumulative time of canister purge after engine start becomes 120 seconds or more, at a vehicle speed of 32 km/h (20 MPH) or more.
If judgment cannot be made, repeat the diagnosis after a predetermined interval has passed.

Monitor 2 (first idle condition)

Perform the diagnosis only once at the fast idle (the idling before starting to move) after soaking of 5 hours or more, in conditions that A/F feedback has been executed and catalytic converter has been warmed up (approx. 25 seconds after engine start).
If judgment cannot be made, or the diagnosis cannot be performed at fast idle, do not repeat the diagnosis in this driving cycle.

Monitor 2 (vehicle running condition)

Perform this procedure only when the diagnosis cannot be completed at fast idle.
Perform the diagnosis when the cumulative time of canister purge after engine start becomes 120 seconds or more, at a vehicle speed of 30 km/h (18.6 MPH) or more.
If judgment cannot be made, repeat the diagnosis after a predetermined interval has passed.

4. DIAGNOSTIC METHOD

- **Monitor 1**

• CPC valve stuck open

At the beginning of the Monitor 1, system performs CPC valve stuck open monitor in Mode Z. CPC valve and CCV are closed and the fuel tank pressure is monitored. The pressure transition over a calibrated time is then used to determine if the CPC valve is stuck open.

CPC valve stuck open test at Mode Z of Monitor 1

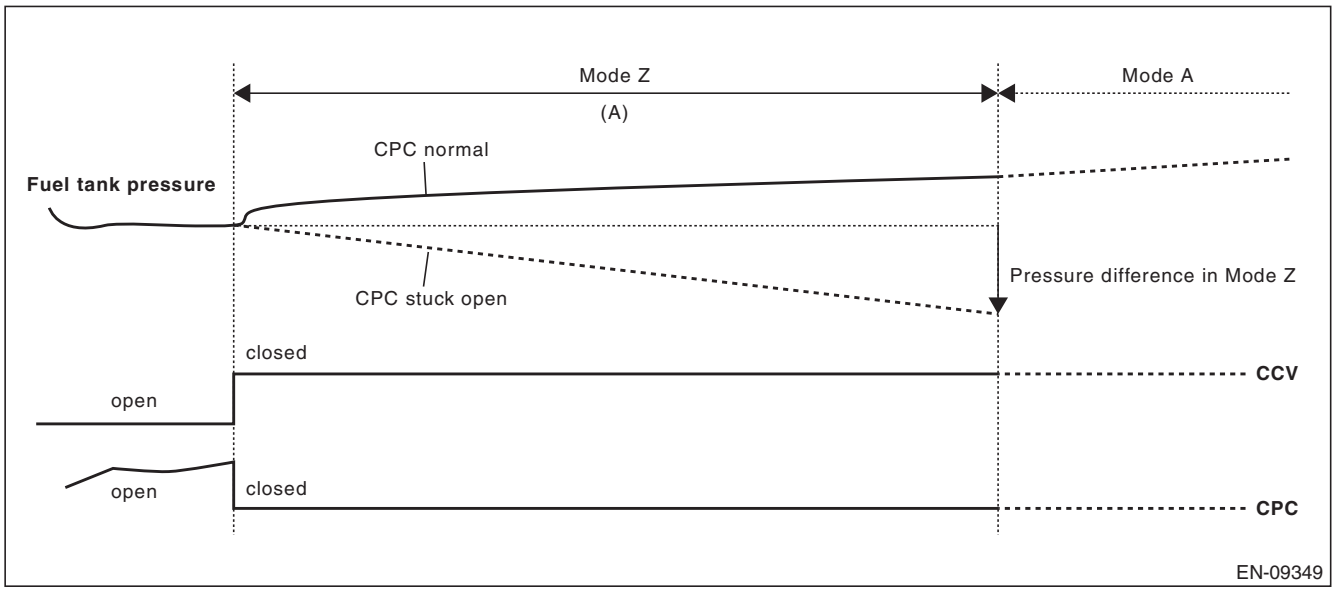

(A) 3000 ms

Judgment

- Pressure difference in Mode Z < 0.9 kPa (6.5 mmHg, 0.3 inHg) → Fail [CPC valve stuck open]: **P0457**
- Pressure difference in Mode Z ≥ 0.4 kPa (3 mmHg, 0.1 inHg) → Pass → move to **Mode A**

• Fuel cap loose/off and CPC valve stuck close

Fuel cap loose/off and CPC valve stuck close monitor is performed in Mode B of Monitor 1. The engine lowers the fuel tank pressure using intake manifold vacuum via the operation of the CPC valve. The pressure transition over a calibrated time is then used to determine if the Fuel cap loose/off or CPC valve stuck closed.

GETtheMANUALS.org

Fuel cap off or CPC stuck close at Mode B of Monitor 1

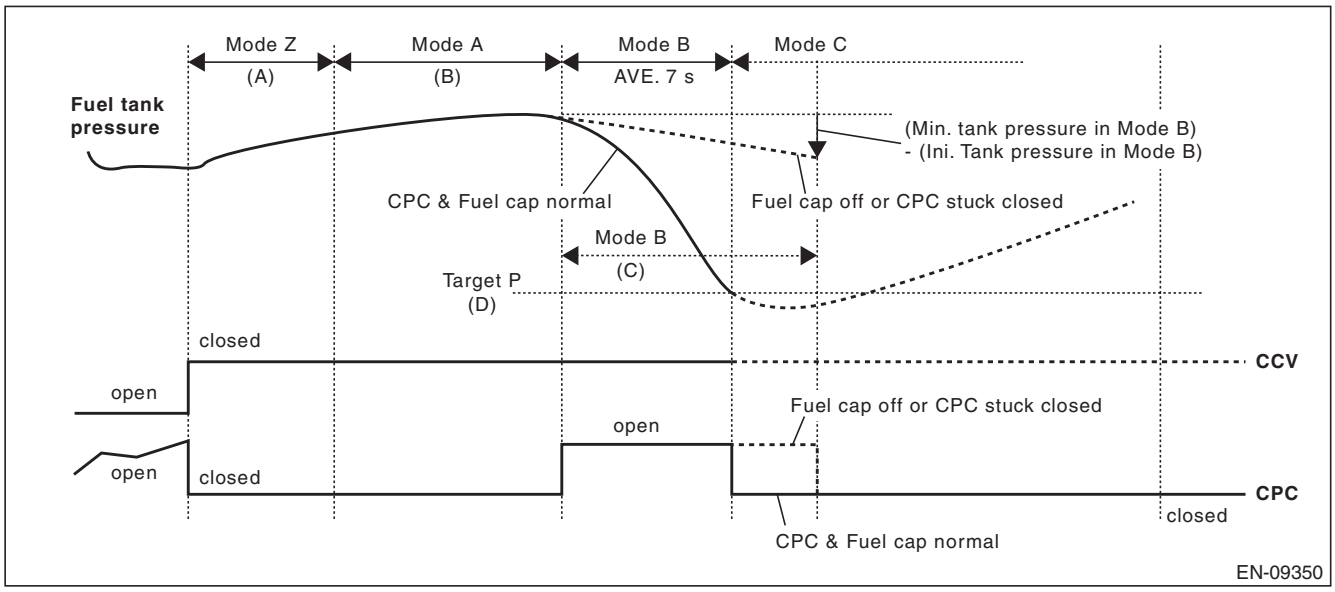

(A) 3000 ms (B) 10000 ms (C) 10000 ms
(D) –1.4 kPa (–10.5 mmHg, –0.4 inHg)

Judgment

- Elapsed time in Mode B ≥ 10000 ms and (Minimum tank pressure in Mode B) – (Initial tank pressure in Mode B) > –0.5 kPa (–4 mmHg, –0.2 inHg) → Fail [Fuel cap off or CPC valve stuck close]: **P0457**
- Fuel tank pressure ≤ –1.4 kPa (–10.5 mmHg, –0.4 inHg) → Pass → move to **Mode C**

Fuel cap loose at Mode B of Monitor 1

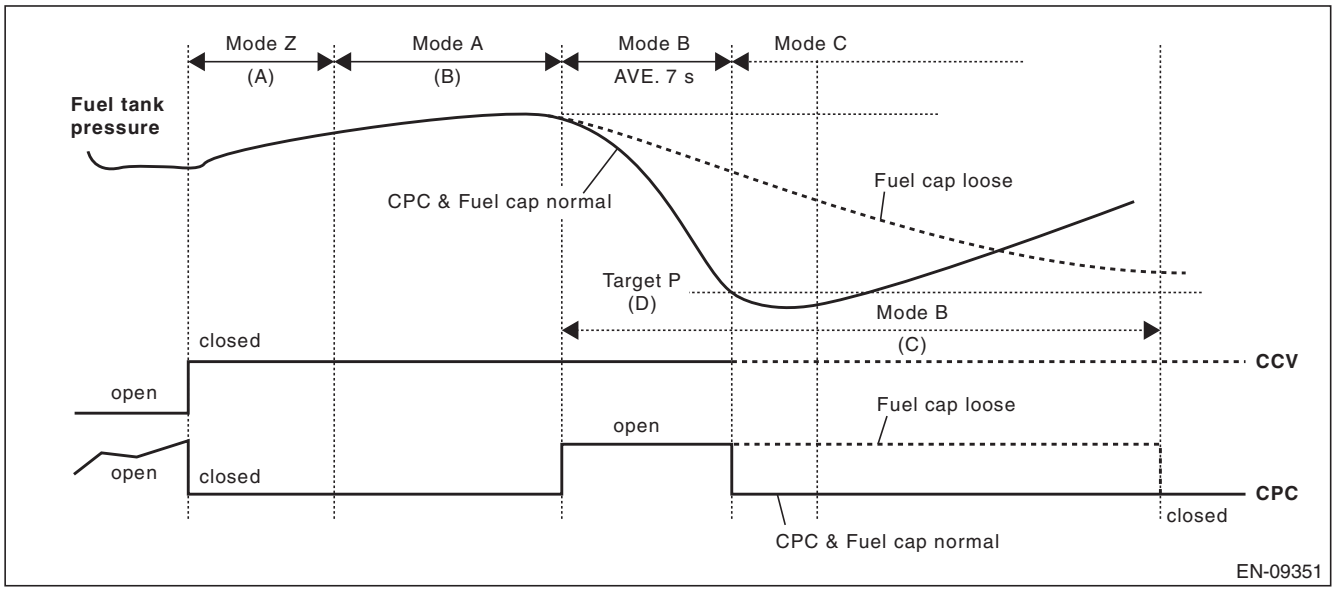

(A) 3000 ms (B) 10000 ms (C) 10000 ms + 25000 ms
(D) –1.4 kPa (–10.5 mmHg, –0.4 inHg)

GETtheMANUALS.org

Judgment
- Elapsed time in Mode B ≥ 10000 ms + 25000 ms → Fail [Fuel cap loose]: **P0457**
- Fuel tank pressure ≤ –1.4 kPa (–10.5 mmHg, –0.4 inHg) → Pass → move to **Mode C**

• 0.040 inch leak check

0.040 inch evaporative leak monitor is executed through Mode A to Mode D of Monitor 1. The engine lowers the fuel tank pressure using intake manifold vacuum via the canister purge operation during engine running. Once the tank pressure reaches a calibrated target (below atmospheric pressure) the purge valve is closed and the fuel tank pressure is monitored. The pressure transition over a calibrated time period is then used to determine if the fuel tank system has a leak.

0.040 inch EVAP monitor test

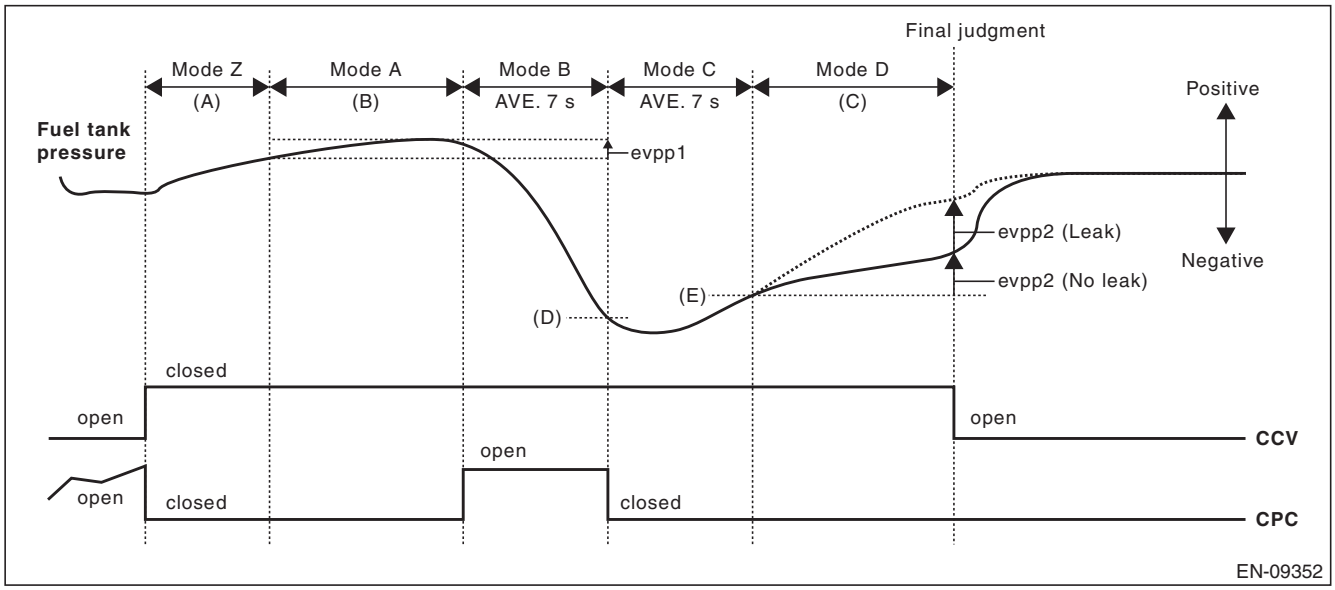

(A)	3000 ms	(B)	10000 ms	(C)	10000 ms
(D)	–1.4 kPa (–10.5 mmHg, –0.4 inHg)	(E)	–1.3 kPa (–9.75 mmHg, –0.4 inHg)		

Judgment
- evpp2 – 1.5 × evpp1 > Map 1 → Fail [0.040 inch Leak]: **P0442**
- evpp2 – 1.5 × evpp1 ≤ Map 1 → Pass [No Leak]

GETtheMANUALS.org

- **Monitor 2 (first idle condition)**

0.020 inch leak check at first idle condition

An intrusive evaporative leak monitor test is run following the first engine start after a calibrated engine off soak period. The engine lowers the fuel tank pressure using intake manifold vacuum via the purge valve operation during engine idle. Once the tank pressure reaches a calibrated target (below atmospheric pressure) the purge valve is closed and the fuel tank pressure is monitored. The pressure transition over a calibrated time period is then used to determine if the fuel tank system has a leak.

Intrusive EVAP Monitor test at first Idle

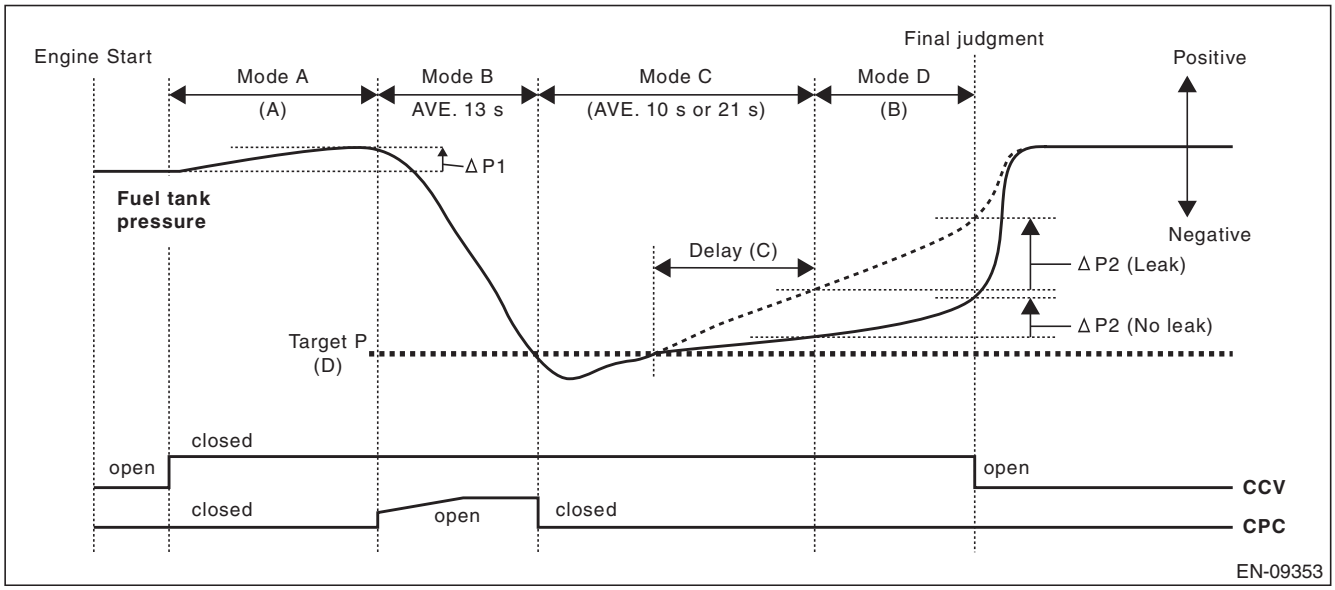

(A) 128 ms or 10000 ms (B) 10000 ms (C) 2000 ms or 10000 ms
(D) –1.3 kPa (–10 mmHg, –0.4 inHg)

Judgment

- △P2 – △P1 > Map 5 or Map 7 → Fail [0.020 inch Leak]: **P0456**
- △P2 – △P1 ≤ Map 6 or Map 8 → Pass [No Leak]

GETtheMANUALS.org

- **Monitor 2 (vehicle running condition)**

0.020 inch Monitor during Vehicle Running (moving) Conditions
While the vehicle is vehicle running, the diagnostic intrusively pulls-down the fuel tank pressure using manifold vacuum via the purge valve. Once the tank pressure reaches a calibrated target (below atmospheric pressure) the purge valve is closed and the fuel tank pressure is monitored. The pressure transition over a calibrated time period is then used to determine if the fuel tank system has a leak.
Intrusive EVAP Monitor Test (Vehicle Running)

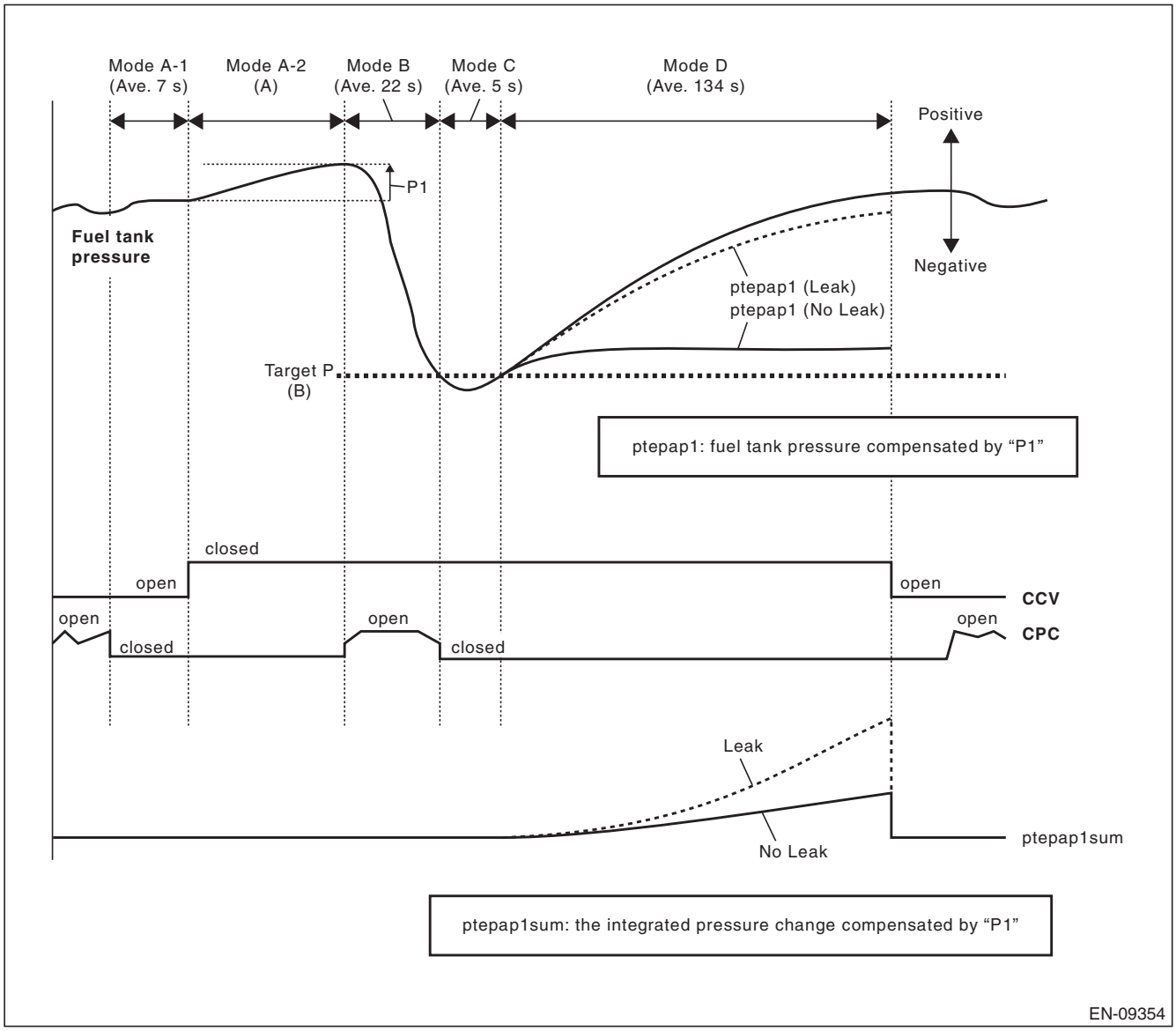

(A) 30000 ms (B) –2 kPa (–15 mmHg, –0.6 inHg)

Judgment
- ptepap1sum > Map 11 → Fail [0.020 inch Leak]: **P0456**
- ptepap1sum ≤ Map 12 → Pass [No Leak]

GETtheMANUALS.org

DE:DTC P0447 EVAPORATIVE EMISSION CONTROL SYSTEM VENT CONTROL CIRCUIT OPEN

1. OUTLINE OF DIAGNOSIS

Detect open or short circuit of the drain valve.
Judge as NG when the ECM output level differs from the actual terminal level.

2. COMPONENT DESCRIPTION

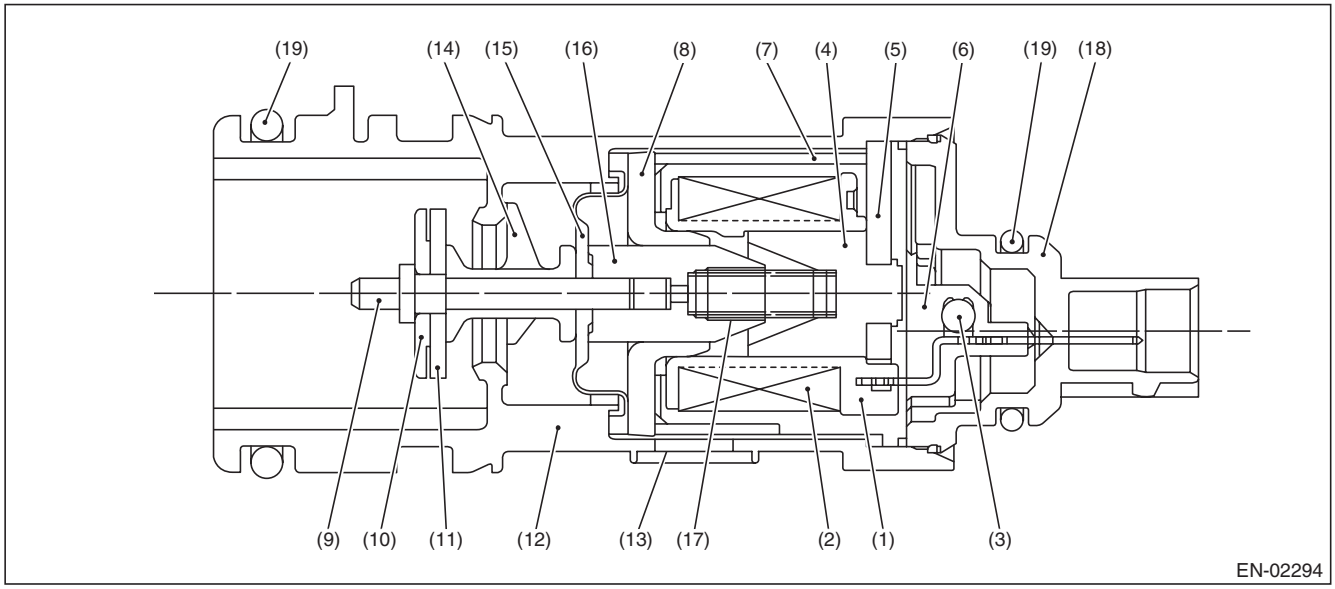

(1)	Bobbin	(8)	Magnetic plate	(15)	Diaphragm
(2)	Coil	(9)	Shaft	(16)	Movable core
(3)	Diode	(10)	Plate	(17)	Spring
(4)	Stator core	(11)	Valve	(18)	Cover
(5)	End plate	(12)	Housing	(19)	O-ring
(6)	Body	(13)	Filter		
(7)	Yoke	(14)	Retainer		

3. ENABLE CONDITION

Secondary Parameters	Enable Conditions
None	

4. GENERAL DRIVING CYCLE

Always perform the diagnosis continuously.

GETtheMANUALS.org

5. DIAGNOSTIC METHOD

- **Abnormality Judgment**

If the duration of time while the following conditions are met is longer than the time indicated, judge as NG.

Judgment Value

Malfunction Criteria	Threshold Value
Battery voltage	≥ 10.9 V
Elapsed time after starting the engine	≥ 1 s
Terminal output voltage when ECM outputs OFF signal	Low

Time Needed for Diagnosis: 2500 ms
Malfunction Indicator Light Illumination: Illuminates as soon as a malfunction occurs.

- **Normality Judgment**

Judge as OK and clear the NG if the continuous time while the following conditions are established is more than the predetermined time.

Judgment Value

Malfunction Criteria	Threshold Value
Battery voltage	≥ 10.9 V
Elapsed time after starting the engine	≥ 1 s
Terminal output voltage when ECM outputs OFF signal	High

Time Needed for Diagnosis: Less than 1 second

GETtheMANUALS.org

DF:DTC P0448 EVAPORATIVE EMISSION CONTROL SYSTEM VENT CONTROL CIRCUIT SHORTED

1. OUTLINE OF DIAGNOSIS

Detect open or short circuit of the drain valve.
Judge as NG when the ECM output level differs from the actual terminal level.

2. COMPONENT DESCRIPTION

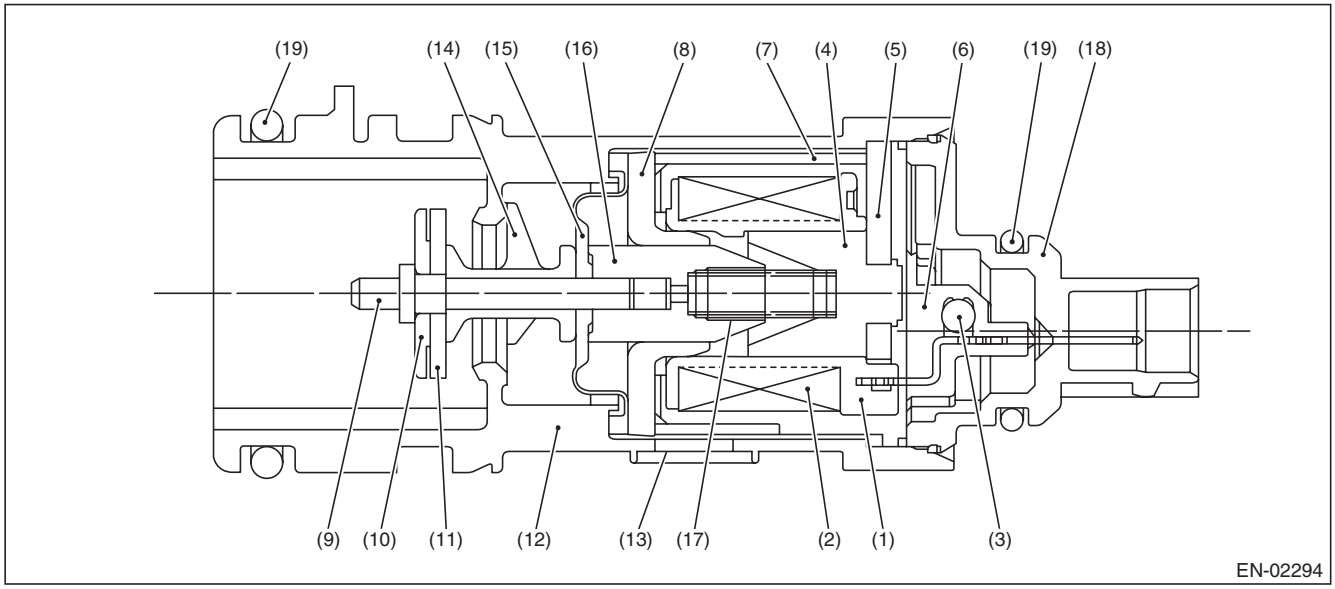

(1)	Bobbin	(8)	Magnetic plate	(15)	Diaphragm
(2)	Coil	(9)	Shaft	(16)	Movable core
(3)	Diode	(10)	Plate	(17)	Spring
(4)	Stator core	(11)	Valve	(18)	Cover
(5)	End plate	(12)	Housing	(19)	O-ring
(6)	Body	(13)	Filter		
(7)	Yoke	(14)	Retainer		

3. ENABLE CONDITION

Secondary Parameters	Enable Conditions
None	

4. GENERAL DRIVING CYCLE

Always perform the diagnosis continuously.

GETtheMANUALS.org

5. DIAGNOSTIC METHOD

- **Abnormality Judgment**

If the duration of time while the following conditions are met is longer than the time indicated, judge as NG.

Judgment Value

Malfunction Criteria	Threshold Value
Battery voltage	≥ 10.9 V
Elapsed time after starting the engine	≥ 1 s
Terminal output voltage when ECM outputs ON signal	High

Time Needed for Diagnosis: 2500 ms
Malfunction Indicator Light Illumination: Illuminates as soon as a malfunction occurs.

- **Normality Judgment**

Judge as OK and clear the NG if the continuous time while the following conditions are established is more than the predetermined time.

Judgment Value

Malfunction Criteria	Threshold Value
Battery voltage	≥ 10.9 V
Elapsed time after starting the engine	≥ 1 s
Terminal output voltage when ECM outputs ON signal	Low

Time Needed for Diagnosis: Less than 1 second

GETtheMANUALS.org

DG:DTC P0451 EVAPORATIVE EMISSION CONTROL SYSTEM PRESSURE SENSOR

1. OUTLINE OF DIAGNOSIS

Detect malfunctions of tank pressure sensor output property by the following two diagnoses.

- **DRIFT DIAGNOSIS**

To detect drift malfunction and offset malfunction of tank pressure sensor, activate ECM in the predetermined soaking time after turning the ignition switch OFF, and check that the tank pressure sensor input value is equivalent to the barometric pressure.
For vehicles equipped with pressure control valve, be sure to open the pressure control valve when performing the diagnosis, because the pressure inside the tank increases if the ambient temperature rises during soaking.

- **Stuck Diagnosis**

When there is no pressure variation, which should have occurred in the tank considering the operation status, judge as NG.

2. COMPONENT DESCRIPTION

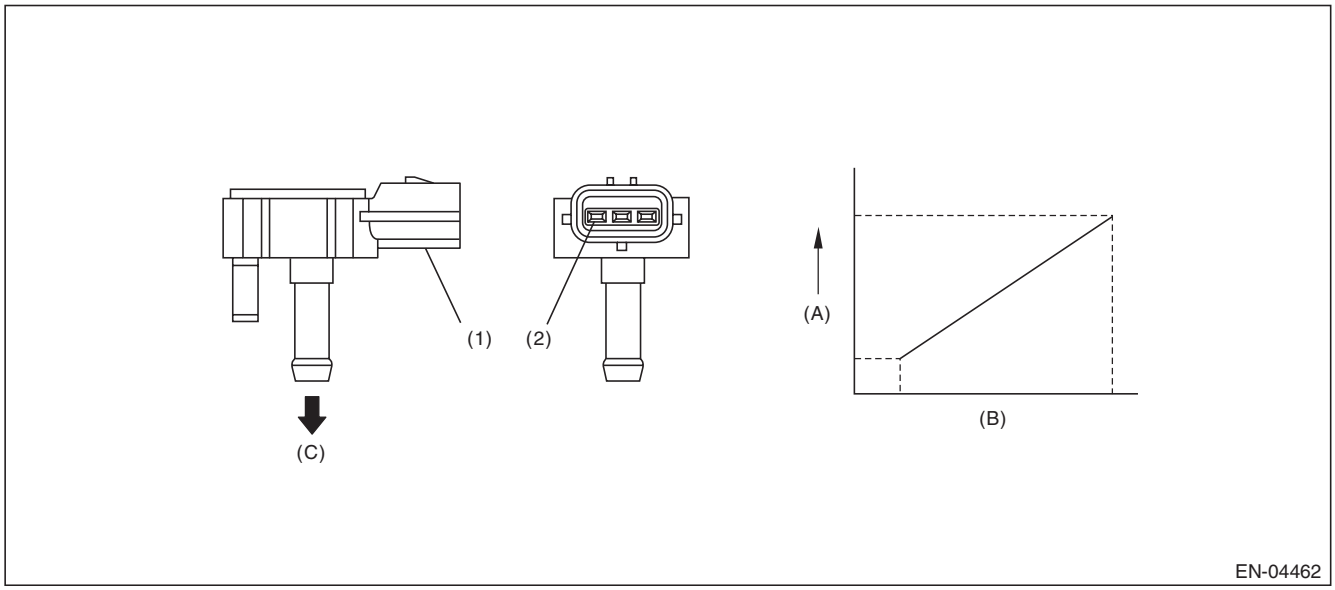

(A)	Output voltage	(B)	Input voltage	(C)	To fuel tank
(1)	Connector	(2)	Terminals		

GETtheMANUALS.org

3. ENABLE CONDITION

<DRIFT DIAGNOSIS>

Secondary Parameters	Enable Conditions
Soaking time	≥ 3600 s × 2 time(s)
Ignition switch	OFF
Battery voltage	≥ 10.9 V
Atmospheric pressure	≥ 75 kPa (563 mmHg, 22.2 inHg)
Fuel temperature	< 55 °C (131 °F)
Intake air temperature	> –10 °C (14 °F) and < 55 °C (131 °F)
Cumulative amount of purge during previous driving cycle	≥ Value from Map
Fuel level when the ignition switch is OFF	≥ 10.5 ℓ (2.77 US gal, 2.31 Imp gal) and < 59.5 ℓ (15.72 US gal, 13.09 Imp gal)

Map

Ambient air temperature °C (°F)	25 (77)	35 (95)	40 (104)	45 (113)
Cumulative amount of purge during previous driving cycle g (oz)	0 (0)	0 (0)	0 (0)	0 (0)

<Stuck Diagnosis>

Secondary Parameters	Enable Conditions
Elapsed time after starting the engine	≥ 60 s
Fuel level	≥ 10.5 ℓ (2.77 US gal, 2.31 Imp gal)
Fuel temperature	< 55 °C (131 °F)
Battery voltage	≥ 10.9 V
Atmospheric pressure	≥ 75 kPa (563 mmHg, 22.2 inHg)

4. GENERAL DRIVING CYCLE

<DRIFT DIAGNOSIS>

Perform the diagnosis only once when 3600 s × 2 time(s) has passed after the ignition switch is OFF.

<Stuck Diagnosis>

- Perform the diagnosis continuously after 60 s have passed since the engine started.
- Pay attention to the fuel level and temperature.

GETtheMANUALS.org

5. DIAGNOSTIC METHOD

<DRIFT DIAGNOSIS>

Abnormality Judgment

Judge as NG when one of the following conditions is established.

Judgment Value

Malfunction Criteria	Threshold Value
Tank pressure sensor learning value	≥ 0.7 kPa (5.106 mmHg, 0.2 inHg) or < –0.7 kPa (–5.106 mmHg, –0.2 inHg)
Tank pressure sensor measured value – Tank pressure sensor learning value	≥ 0.3 kPa (2.507 mmHg, 0.1 inHg) or < –0.3 kPa (–2.507 mmHg, –0.1 inHg)

Time Needed for Diagnosis: 10 seconds

Malfunction Indicator Light Illumination: Illuminates when malfunction occurs in 2 continuous driving cycles.

Normality Judgment

Judge as OK and clear the NG if the following conditions are established.

Judgment Value

Malfunction Criteria	Threshold Value
Tank pressure sensor learning value	< 0.7 kPa (5.106 mmHg, 0.2 inHg) and ≥ –0.7 kPa (–5.106 mmHg, –0.2 inHg)
Tank pressure sensor measured value – Tank pressure sensor learning value	< 0.3 kPa (2.507 mmHg, 0.1 inHg) and ≥ –0.3 kPa (–2.507 mmHg, –0.1 inHg)

Time Needed for Diagnosis: 10 seconds

GETtheMANUALS.org

<Stuck Diagnosis>

Abnormality Judgment

If the duration of time while the following conditions are met is longer than the time indicated, judge as NG.

Judgment Value

Malfunction Criteria	Threshold Value
Number of times that the difference between the Max. fuel level every 60 s and Min. fuel level every 60 s is 2 ℓ (0.53 US gal, 0.44 Imp gal) or more (with enable condition established)	≥ 16 time(s)
Maximum – Minimum tank pressure (with enable condition completed)	< 0 kPa (0.375 mmHg, 0 inHg)
Maximum – Minimum fuel temperature (with enable condition completed)	≥ 7 °C (12.6°F)

If the difference between the Max. fuel level every 60 s and Min. fuel level every 60 s is less than 2 ℓ (0.53 US gal, 0.44 Imp gal), extend 60 s and make judgment with the Max. and Min. values for the fuel level in 60 s × 2. If there is no difference after the extension of 60 s, continue further to 60 s × 3, 60 s × 4, 60 s × 5. If the difference between the Max. fuel level every 60 s and Min. fuel level every 60 s is 2 ℓ (0.53 US gal, 0.44 Imp gal) or more, the diagnosis counter counts up.

Time Needed for Diagnosis: 60 s × 16 time(s) or more

Malfunction Indicator Light Illumination: Illuminates when malfunction occurs in 2 continuous driving cycles.

Normality Judgment

Judge as OK and clear the NG if the continuous time while the following conditions are established is more than the predetermined time.

Judgment Value

Malfunction Criteria	Threshold Value
Maximum – Minimum tank pressure	≥ 0 kPa (0.375 mmHg, 0 inHg)

Time Needed for Diagnosis: Less than 1 second

GETtheMANUALS.org

DH:DTC P0452 EVAPORATIVE EMISSION CONTROL SYSTEM PRESSURE SENSOR LOW INPUT

1. OUTLINE OF DIAGNOSIS

Detect the open or short circuit of the fuel tank pressure sensor.
Judge as NG if out of specification.

2. COMPONENT DESCRIPTION

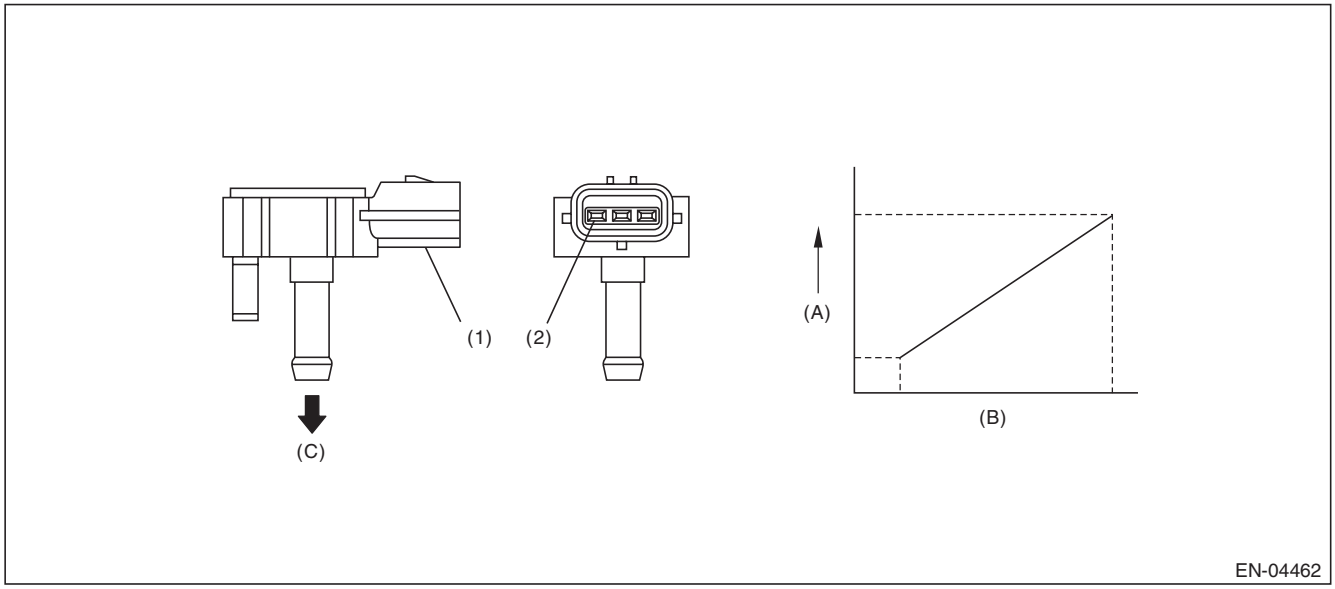

(A) Output voltage
(B) Input voltage
(C) To fuel tank
(1) Connector
(2) Terminals

3. ENABLE CONDITION

Secondary Parameters	Enable Conditions
None	

4. GENERAL DRIVING CYCLE

Always perform the diagnosis continuously.

GETtheMANUALS.org

5. DIAGNOSTIC METHOD

- **Abnormality Judgment**

If the duration of time while the following conditions are met is longer than the time indicated, judge as NG.

Judgment Value

Malfunction Criteria	Threshold Value
Fuel tank pressure	< –7.4 kPa (–55.6 mmHg, –2.2 inHg)
Battery voltage	≥ 10.9 V

Time Needed for Diagnosis: 15000 ms
Malfunction Indicator Light Illumination: Illuminates as soon as a malfunction occurs.

- **Normality Judgment**

Judge as OK and clear the NG if the continuous time while the following conditions are established is more than the predetermined time.

Judgment Value

Malfunction Criteria	Threshold Value
Fuel tank pressure	≥ –7.4 kPa (–55.6 mmHg, –2.2 inHg)
Battery voltage	≥ 10.9 V

Time Needed for Diagnosis: Less than 1 second

GETtheMANUALS.org

DI: DTC P0453 EVAPORATIVE EMISSION CONTROL SYSTEM PRESSURE SENSOR HIGH INPUT

1. OUTLINE OF DIAGNOSIS

Detect the open or short circuit of the fuel tank pressure sensor.
Judge as NG if out of specification.

2. COMPONENT DESCRIPTION

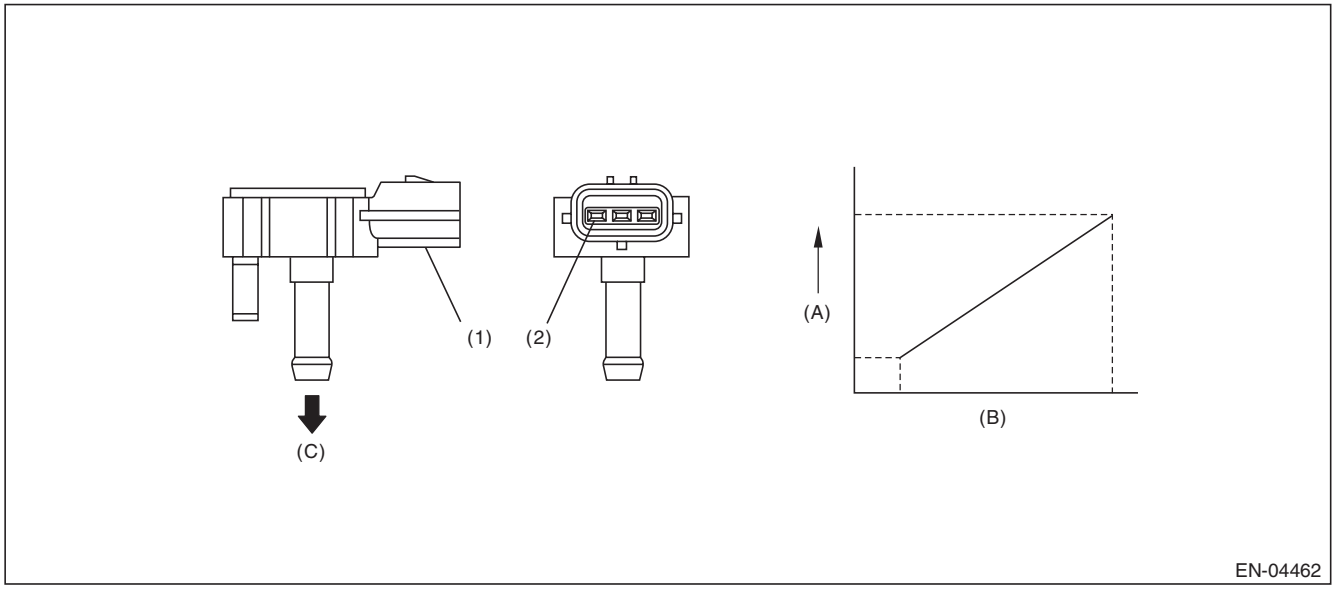

(A) Output voltage
(B) Input voltage
(C) To fuel tank
(1) Connector
(2) Terminals

3. ENABLE CONDITION

Secondary Parameters	Enable Conditions
Time needed for all secondary parameters to be in enable conditions	≥ 5000 ms
Vehicle speed	≥ 2 km/h (1.2 MPH)
All conditions of EVAP canister purge	Completed
Learning value of evaporation gas concentration (left and right)	< 0.08
Main feedback compensation coefficient (left and right)	≥ 0.9
Battery voltage	≥ 10.9 V

4. GENERAL DRIVING CYCLE

Perform the diagnosis when purging enable conditions are met without idling.

GETtheMANUALS.org

5. DIAGNOSTIC METHOD

- **Abnormality Judgment**

If the duration of time while the following conditions are met is longer than the time indicated, judge as NG.

Judgment Value

Malfunction Criteria	Threshold Value
Fuel tank pressure	≥ 7.9 kPa (59.6 mmHg, 2.3 inHg)
Fuel temperature	< 55 °C (131 °F)
Atmospheric pressure	≥ 75 kPa (563 mmHg, 22.2 inHg)

Time Needed for Diagnosis: 15000 ms
Malfunction Indicator Light Illumination: Illuminates as soon as a malfunction occurs.

- **Normality Judgment**

Judge as OK and clear the NG if the continuous time while the following conditions are established is more than the predetermined time.

Judgment Value

Malfunction Criteria	Threshold Value
Fuel tank pressure	< 7.9 kPa (59.6 mmHg, 2.3 inHg)

Time Needed for Diagnosis: Less than 1 second

GETtheMANUALS.org

DJ:DTC P0456 EVAPORATIVE EMISSION CONTROL SYSTEM LEAK DETECTED (VERY SMALL LEAK)

1. OUTLINE OF DIAGNOSIS

NOTE:
For the detection standard, refer to DTC P0442. <Ref. to GD(H6DO)-151, DTC P0442 EVAPORATIVE EMISSION CONTROL SYSTEM LEAK DETECTED (SMALL LEAK), Diagnostic Trouble Code (DTC) Detecting Criteria.>

DK:DTC P0457 EVAPORATIVE EMISSION CONTROL SYSTEM LEAK DETECTED (FUEL CAP LOOSE/OFF)

1. OUTLINE OF DIAGNOSIS

For the detection standard, refer to DTC P0442. <Ref. to GD(H6DO)-151, DTC P0442 EVAPORATIVE EMISSION CONTROL SYSTEM LEAK DETECTED (SMALL LEAK), Diagnostic Trouble Code (DTC) Detecting Criteria.>

GETtheMANUALS.org

DL:DTC P0458 EVAPORATIVE EMISSION SYSTEM PURGE CONTROL VALVE CIRCUIT LOW

1. OUTLINE OF DIAGNOSIS

Detect open or short circuit of the purge control solenoid valve.
Judge as NG when the ECM output level differs from the actual terminal level.

2. COMPONENT DESCRIPTION

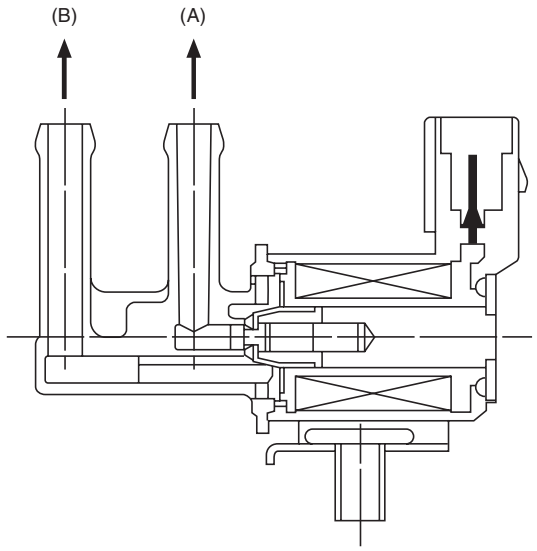

(A) To canister (B) To intake manifold

3. ENABLE CONDITION

Secondary Parameters	Enable Conditions
Battery voltage	≥ 10.9 V
Elapsed time after starting the engine	≥ 1 s

4. GENERAL DRIVING CYCLE

Always perform the diagnosis after starting the engine.

GETtheMANUALS.org

5. DIAGNOSTIC METHOD

- **Abnormality Judgment**

If the duration of time while the following conditions are met is longer than the time indicated, judge as NG.

Judgment Value

Malfunction Criteria	Threshold Value
Duty ratio of “ON”	< 0.75
Terminal output voltage	Low

Time Needed for Diagnosis: 2500 ms
Malfunction Indicator Light Illumination: Illuminates when malfunction occurs in 2 continuous driving cycles.

- **Normality Judgment**

Judge as OK and clear the NG if the continuous time while the following conditions are established is more than the predetermined time.

Judgment Value

Malfunction Criteria	Threshold Value
Terminal output voltage	High

Time Needed for Diagnosis: Less than 1 second

GETtheMANUALS.org

DM:DTC P0459 EVAPORATIVE EMISSION SYSTEM PURGE CONTROL VALVE CIRCUIT HIGH

1. OUTLINE OF DIAGNOSIS

Detect open or short circuit of the purge control solenoid valve.
Judge as NG when the ECM output level differs from the actual terminal level.

2. COMPONENT DESCRIPTION

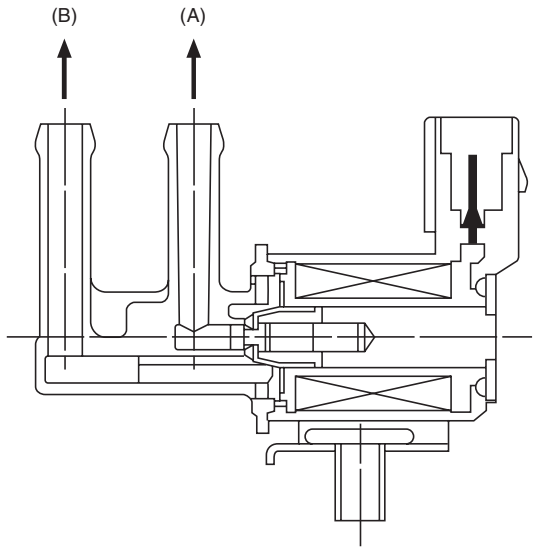

(A) To canister (B) To intake manifold

3. ENABLE CONDITION

Secondary Parameters	Enable Conditions
Battery voltage	≥ 10.9 V
Elapsed time after starting the engine	≥ 1 s

4. GENERAL DRIVING CYCLE

Always perform the diagnosis after starting the engine.

GETtheMANUALS.org

5. DIAGNOSTIC METHOD

- **Abnormality Judgment**

If the duration of time while the following conditions are met is longer than the time indicated, judge as NG.

Judgment Value

Malfunction Criteria	Threshold Value
Duty ratio of “ON”	≥ 0.25
Terminal output voltage	High

Time Needed for Diagnosis: 2500 ms
Malfunction Indicator Light Illumination: Illuminates when malfunction occurs in 2 continuous driving cycles.

- **Normality Judgment**

Judge as OK and clear the NG if the continuous time while the following conditions are established is more than the predetermined time.

Judgment Value

Malfunction Criteria	Threshold Value
Terminal output voltage	Low

Time Needed for Diagnosis: Less than 1 second

GETtheMANUALS.org

DN:DTC P0461 FUEL LEVEL SENSOR “A” CIRCUIT RANGE/PERFORMANCE

1. OUTLINE OF DIAGNOSIS

Detect malfunctions of the fuel level sensor output property.
If the fuel level does not vary in a particular driving condition / engine condition where it should, judge as NG.

2. COMPONENT DESCRIPTION

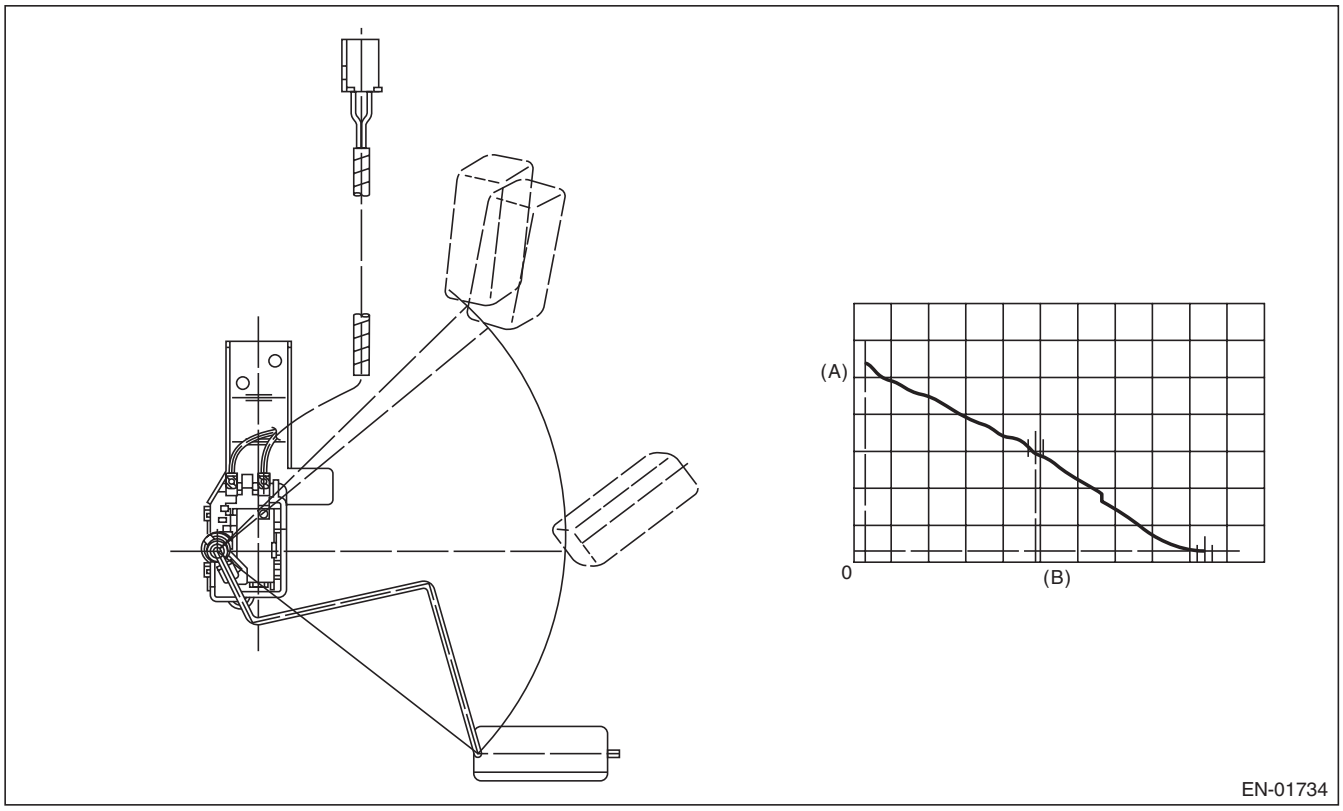

(A) Fuel level (B) Resistance

3. ENABLE CONDITION

Secondary Parameters	Enable Conditions
None	

4. GENERAL DRIVING CYCLE

Always perform the diagnosis continuously.

GETtheMANUALS.org

5. DIAGNOSTIC METHOD

- **Abnormality Judgment**

Judge as NG when the following conditions are established.

Judgment Value

Malfunction Criteria	Threshold Value
Accumulated amount of intake air	≥ 165375 g (5832.78 oz)
Max. – min. values of fuel level output	< 2.6 ℓ (0.69 US gal, 0.57 Imp gal)
Battery voltage	≥ 10.9 V
Engine speed	< 4000 rpm
Elapsed time after starting the engine	≥ 5000 ms

Time Needed for Diagnosis: Less than 1 second
Malfunction Indicator Light Illumination: Illuminates when malfunction occurs in 2 continuous driving cycles.

- **Normality Judgment**

Judge as OK and clear the NG if the following conditions are established.

Judgment Value

Malfunction Criteria	Threshold Value
Accumulated amount of intake air	≥ 165375 g (5832.78 oz)
Max. – min. values of fuel level output	≥ 2.6 ℓ (0.69 US gal, 0.57 Imp gal)
Battery voltage	≥ 10.9 V
Engine speed	< 4000 rpm
Elapsed time after starting the engine	≥ 5000 ms

Time Needed for Diagnosis: Less than 1 second

GETtheMANUALS.org

DO:DTC P0462 FUEL LEVEL SENSOR “A” CIRCUIT LOW

1. OUTLINE OF DIAGNOSIS

Detect the open or short circuit of fuel level sensor. Judge as NG if out of specification.

2. COMPONENT DESCRIPTION

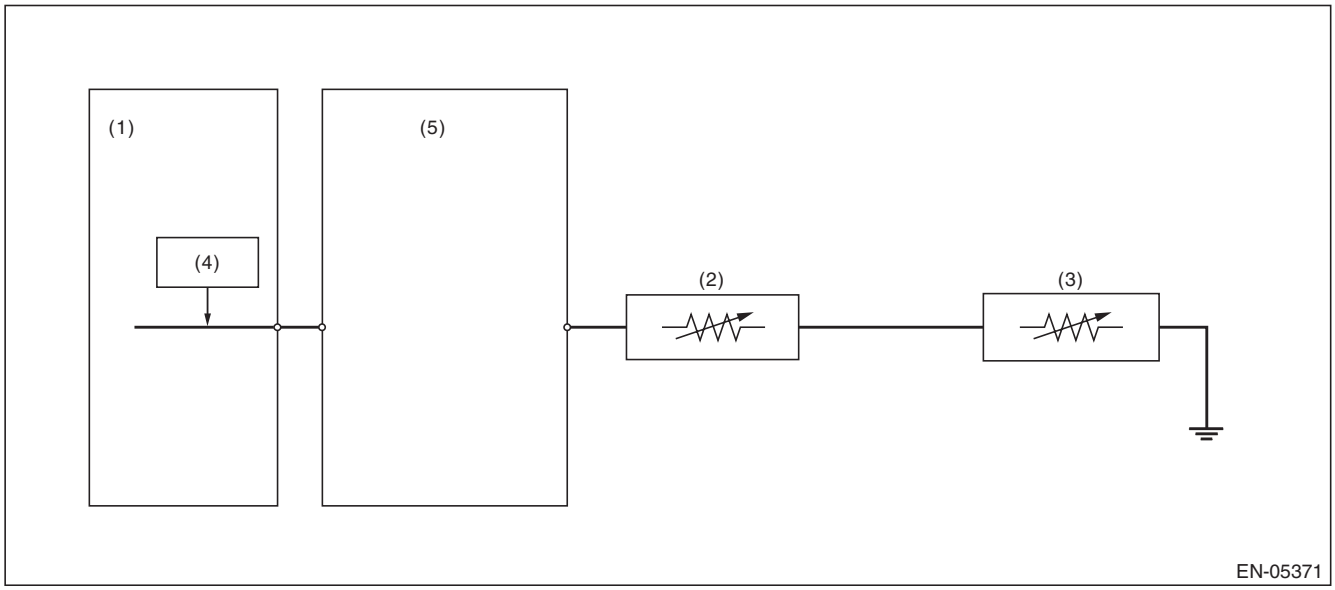

(1) Engine control module (ECM)
(2) Fuel level sensor
(3) Fuel sub level sensor
(4) Detecting circuit
(5) Body integrated unit

3. ENABLE CONDITION

Secondary Parameters	Enable Conditions
None	

4. GENERAL DRIVING CYCLE

Always perform the diagnosis continuously.

GETtheMANUALS.org

5. DIAGNOSTIC METHOD

- **Abnormality Judgment**

If the duration of time while the following conditions are met is longer than the time indicated, judge as NG.

Judgment Value

Malfunction Criteria	Threshold Value
Battery voltage	≥ 10.9 V
Elapsed time after starting the engine	≥ 3000 ms
Output voltage	< 0.173 V

Time Needed for Diagnosis: 2500 ms
Malfunction Indicator Light Illumination: Illuminates when malfunction occurs in 2 continuous driving cycles.

- **Normality Judgment**

Judge as OK and clear the NG if the continuous time while the following conditions are established is more than the predetermined time.

Judgment Value

Malfunction Criteria	Threshold Value
Battery voltage	≥ 10.9 V
Elapsed time after starting the engine	≥ 3000 ms
Output voltage	≥ 0.173 V

Time Needed for Diagnosis: Less than 1 second

GETtheMANUALS.org

DP:DTC P0463 FUEL LEVEL SENSOR “A” CIRCUIT HIGH

1. OUTLINE OF DIAGNOSIS

Detect the open or short circuit of fuel level sensor. Judge as NG if out of specification.

2. COMPONENT DESCRIPTION

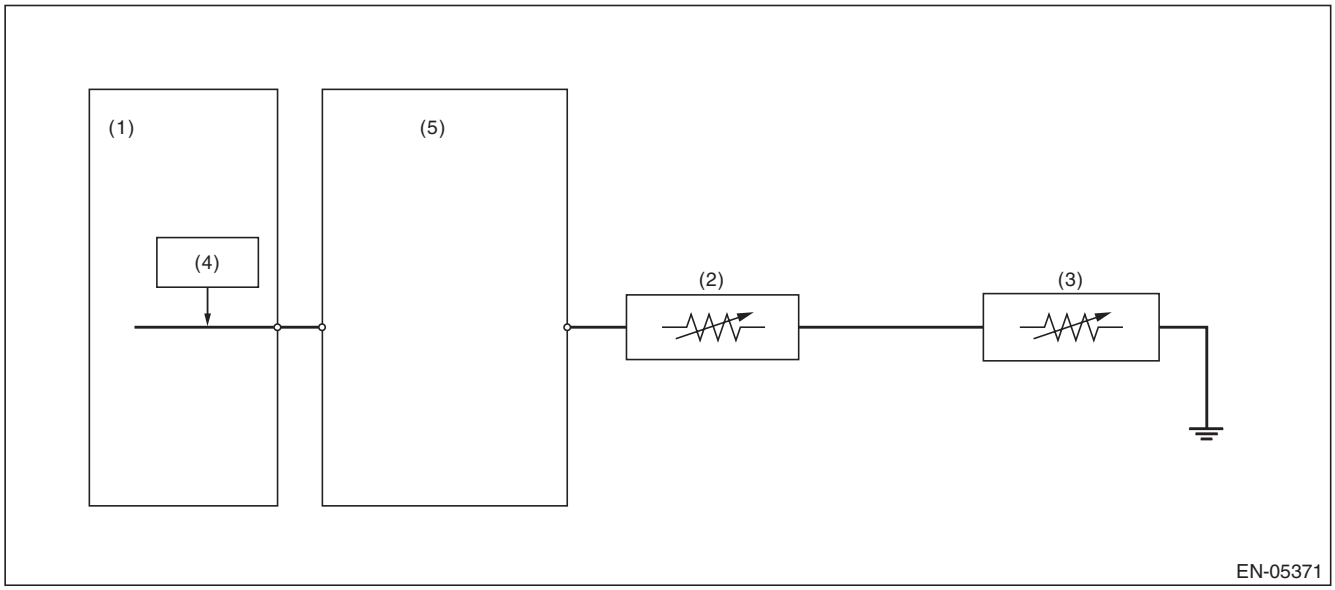

(1) Engine control module (ECM)
(2) Fuel level sensor
(3) Fuel sub level sensor
(4) Detecting circuit
(5) Body integrated unit

3. ENABLE CONDITION

Secondary Parameters	Enable Conditions
None	

4. GENERAL DRIVING CYCLE

Always perform the diagnosis continuously.

GETtheMANUALS.org

5. DIAGNOSTIC METHOD

- **Abnormality Judgment**

If the duration of time while the following conditions are met is longer than the time indicated, judge as NG.

Judgment Value

Malfunction Criteria	Threshold Value
Battery voltage	≥ 10.9 V
Elapsed time after starting the engine	≥ 3000 ms
Output voltage	≥ 7.212 V

Time Needed for Diagnosis: 1000 ms
Malfunction Indicator Light Illumination: Illuminates when malfunction occurs in 2 continuous driving cycles.

- **Normality Judgment**

Judge as OK and clear the NG if the continuous time while the following conditions are established is more than the predetermined time.

Judgment Value

Malfunction Criteria	Threshold Value
Battery voltage	≥ 10.9 V
Elapsed time after starting the engine	≥ 3000 ms
Output voltage	< 7.212 V

Time Needed for Diagnosis: Less than 1 second

GETtheMANUALS.org

DQ:DTC P0464 FUEL LEVEL SENSOR CIRCUIT INTERMITTENT

1. OUTLINE OF DIAGNOSIS

Detect the unstable output faults from the fuel level sensor caused by noise. Judge as NG when the max. value and cumulative value of output voltage variation of the fuel level sensor is larger than the threshold value.

2. ENABLE CONDITION

Malfunction Criteria	Threshold Value
Engine speed	≥ 500 rpm
Elapsed time after starting the engine	≥ 1 s
Battery voltage	≥ 10.9 V
Idle switch	ON
Fuel level	≥ 10.5 ℓ (2.77 US gal, 2.31 Imp gal) and < 59.5 ℓ (15.72 US gal, 13.09 Imp gal)
Vehicle speed = 0 km/h (0 MPH)	≥ 10000 ms

3. GENERAL DRIVING CYCLE

- Always perform the diagnosis continuously at idle speed.
- Pay attention to the fuel level.

GETtheMANUALS.org

4. DIAGNOSTIC METHOD

Calculate the Max. value (DELFLMAX) and cumulative value (SUMFL) of output voltage variation of fuel level sensor during 12.2 seconds. Judge it normal when both max. and cumulative values are not over the threshold value. Otherwise, when either of them is over the threshold value, the diagnosis counter counts up. Judge as NG if the counter indicated 4 time(s).

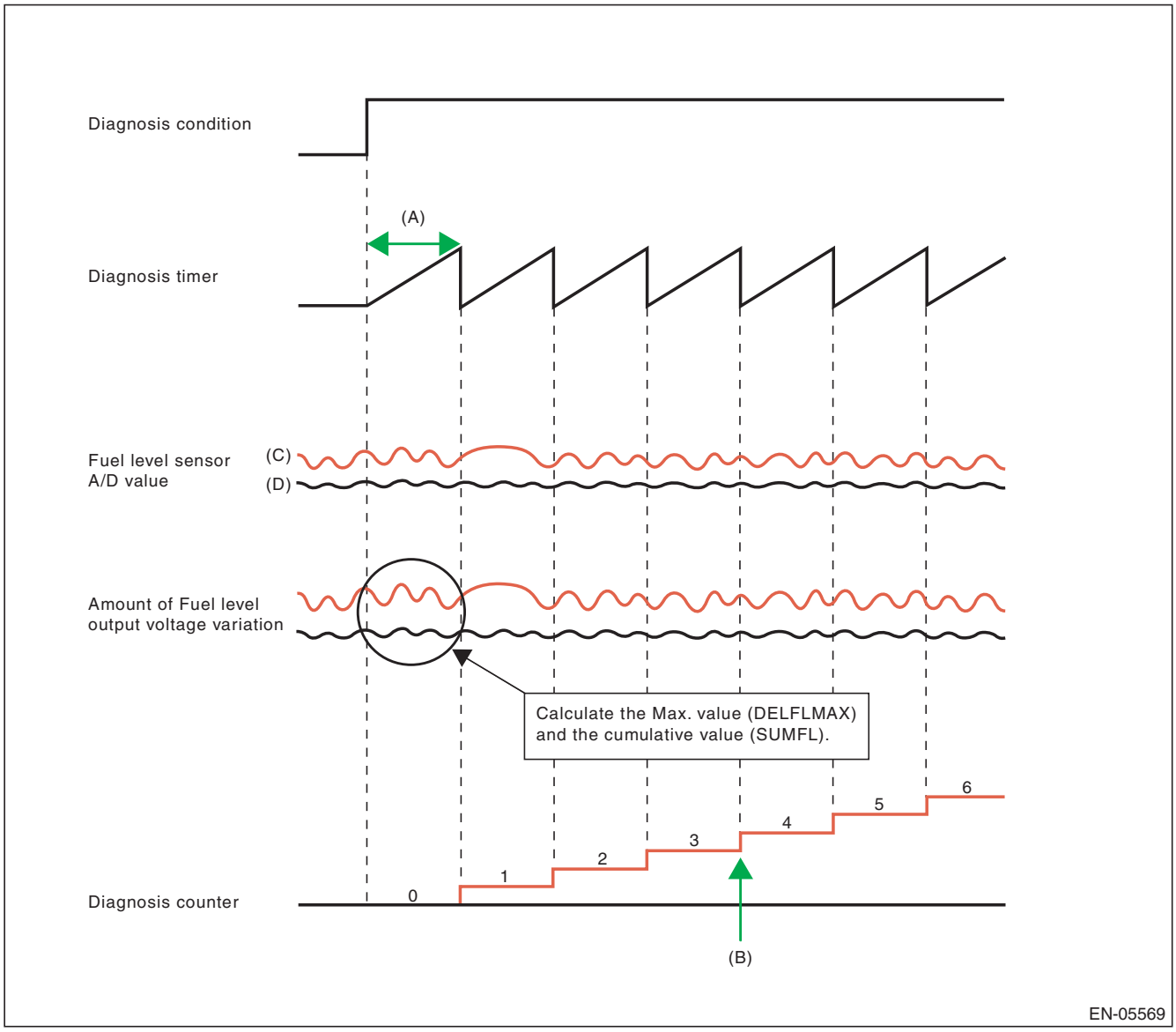

(A) 12288 ms
(B) NG at 4 time(s) counts
(C) Malfunction
(D) Normal

GETtheMANUALS.org

- **Abnormality Judgment**

If the duration of time while the following conditions are met is longer than the time indicated, judge as NG.

Judgment Value

Malfunction Criteria	Threshold Value
Integrated times of the condition reaching follows,	≥ 4 time(s)
DELFLMAX	≥ Value from Map
or	
SUMFL	≥ 23.8 V
At this time,	
DELFLMAX: Maximum difference of sensor output for 12288 ms	
SUMFL: Integrated value of the sensor output deviation for 12288 ms	

Map

Fuel level (ℓ, US gal, Imp gal)	10, 2.64, 2.2	20, 5.28, 4.4	25, 6.61, 5.5	30, 7.93, 6.6	43, 11.36, 9.46	45, 11.89, 9.9	50, 13.21, 11	60, 15.85, 13.2
Measured voltage (V)	0.248	0.519	0.796	0.6	1.025	1.069	1.402	2.186

The diagnosis counter does not count up when the following conditions are completed within 12288 ms.

Maximum value – minimum value of change of tank pressure during 12288 ms	≥ 0 kPa (0.375031 mmHg, 0 inHg)
Maximum value – minimum value of battery voltage during 12288 ms	≥ 1.2 V

Time Needed for Diagnosis: 12288 ms × 4 time(s)
Malfunction Indicator Light Illumination: Illuminates when malfunction occurs in 2 continuous driving cycles.

- **Normality Judgment**

Judge as OK and clear the NG if the continuous time while the following conditions are established is more than the predetermined time.

Judgment Value

Malfunction Criteria	Threshold Value
DELFLMAX	< Value from Map
SUMFL	< 23.8 V
At this time,	
DELFLMAX: Maximum difference of sensor output for 12288 ms	
SUMFL: Integrated value of the sensor output deviation for 12288 ms	

Time Needed for Diagnosis: 12288 ms

GETtheMANUALS.org

DR:DTC P0500 VEHICLE SPEED SENSOR “A”

1. OUTLINE OF DIAGNOSIS

Judge as NG when outside of the judgment value.
Judge NG when the received data from VDCCM&H/U is abnormal vehicle speed, and the vehicle speed data is impossible.

2. COMPONENT DESCRIPTION

Vehicle speed signals are taken in to the VDC control module and hydraulic control unit, and normal/erroneous data of the ABS wheel speed sensor is received by CAN communication from the VDC control module and hydraulic control unit.

3. ENABLE CONDITION

Secondary Parameters	Enable Conditions
Battery voltage	≥ 10.9 V
Elapsed time after starting the engine	≥ 2000 ms

4. GENERAL DRIVING CYCLE

Always perform diagnosis more than 2000 ms after starting the engine.

5. DIAGNOSTIC METHOD

- **Abnormality Judgment**

If the duration of time while the following conditions are met is longer than the time indicated, judge as NG.

Judgment Value

Malfunction Criteria	Threshold Value
Front ABS wheel speed sensor status	Malfunction
Either of the following is established	
Front left wheel speed	≥ 300 km/h (186.4 MPH)
Front right wheel speed	≥ 300 km/h (186.4 MPH)

Time Needed for Diagnosis: 2500 ms
Malfunction Indicator Light Illumination: Illuminates as soon as a malfunction occurs.

- **Normality Judgment**

Judge as OK and clear the NG if the continuous time while the following conditions are established is more than the predetermined time.

Judgment Value

Malfunction Criteria	Threshold Value
Front left wheel speed	> 0 km/h (0 MPH) and < 300 km/h (186.4 MPH)
Front right wheel speed	> 0 km/h (0 MPH) and < 300 km/h (186.4 MPH)

Time Needed for Diagnosis: 2500 ms

GETtheMANUALS.org

DS:DTC P0506 IDLE AIR CONTROL SYSTEM RPM LOWER THAN EXPECTED

1. OUTLINE OF DIAGNOSIS

Detect the malfunction that actual engine speed is not close to target engine speed during idling. Judge as NG when actual engine speed is not close to target engine speed during idling.

2. ENABLE CONDITION

Secondary Parameters	Enable Conditions
Engine coolant temperature	≥ 75 °C (167 °F)
Battery voltage	≥ 10.9 V
Atmospheric pressure	≥ 75 kPa (563 mmHg, 22.2 inHg)
Fuel level	≥ 10.5 ℓ (2.77 US gal, 2.31 Imp gal)
Elapsed time after starting the engine	≥ 10.49 s
Feedback of ISC	In operation
Lambda value (left and right)	≥ 0.9 and < 1.1
After switching air conditioner to ON/OFF	≥ 5.1 s
After intake manifold pressure changes by 4 kPa (30 mmHg, 1.2 inHg) or more.	> 5.1 s
Elapsed time after switching neutral position switch to ON/OFF	> 5.1 s
Vehicle speed	0 km/h (0 MPH)

3. GENERAL DRIVING CYCLE

Perform the diagnosis continuously at idling after warming up engine.

4. DIAGNOSTIC METHOD

- **Abnormality Judgment**

If the duration of time while the following conditions are met is longer than the time indicated, judge as NG.

Judgment Value

Malfunction Criteria	Threshold Value
Actual engine speed – Targeted engine speed	< –100 rpm
Feedback compensation for ISC	Max.

Time Needed for Diagnosis: 10 s × 3 time(s)
Malfunction Indicator Light Illumination: Illuminates when malfunction occurs in 2 continuous driving cycles.

- **Normality Judgment**

Judge as OK and clear the NG if the continuous time while the following conditions are established is more than the predetermined time.

Judgment Value

Malfunction Criteria	Threshold Value
Actual engine speed – Targeted engine speed	≥ –100 rpm

Time Needed for Diagnosis: 10 s

GETtheMANUALS.org

DT:DTC P0507 IDLE AIR CONTROL SYSTEM RPM HIGHER THAN EXPECTED

1. OUTLINE OF DIAGNOSIS

Detect the malfunction that actual engine speed is not close to target engine speed during idling. Judge as NG when actual engine speed is not close to target engine speed during idling.

2. ENABLE CONDITION

Secondary Parameters	Enable Conditions
Engine coolant temperature	≥ 75 °C (167 °F)
Battery voltage	≥ 10.9 V
Atmospheric pressure	≥ 75 kPa (563 mmHg, 22.2 inHg)
Fuel level	≥ 10.5 ℓ (2.77 US gal, 2.31 Imp gal)
Elapsed time after starting the engine	≥ 10.49 s
Feedback of ISC	In operation
Lambda value (left and right)	≥ 0.9 and < 1.1
After switching air conditioner to ON/OFF	≥ 5.1 s
After intake manifold pressure changes by 4 kPa (30 mmHg, 1.2 inHg) or more.	> 5.1 s
Elapsed time after switching neutral position switch to ON/OFF	> 5.1 s
Vehicle speed	0 km/h (0 MPH)

3. GENERAL DRIVING CYCLE

Perform the diagnosis continuously at idling after warming up engine.

4. DIAGNOSTIC METHOD

- **Abnormality Judgment**

If the duration of time while the following conditions are met is longer than the time indicated, judge as NG.

Judgment Value

Malfunction Criteria	Threshold Value
Actual – Target engine speed	≥ 200 rpm
Feedback compensation for ISC	Min.

Time Needed for Diagnosis: 10 s × 3 time(s)
Malfunction Indicator Light Illumination: Illuminates when malfunction occurs in 2 continuous driving cycles.

- **Normality Judgment**

Judge as OK and clear the NG if the continuous time while the following conditions are established is more than the predetermined time.

Judgment Value

Malfunction Criteria	Threshold Value
Actual – Target engine speed	< 200 rpm

Time Needed for Diagnosis: 10 s

GETtheMANUALS.org

DU:DTC P050A COLD START IDLE AIR CONTROL SYSTEM PERFORMANCE

1. OUTLINE OF DIAGNOSIS

- **When cold, the abnormality in the control of target engine speed increase is detected. (P050A)**

Judge as NG if the exhaust gas temperature diagnosis or idle speed diagnosis is NG.

- Exhaust gas temperature diagnosis

Judge as NG when the estimated exhausted gas temperature in 14 seconds after the cold start is below the specified value.

- Idle speed diagnosis

Judge as NG when actual engine speed is not close to target engine speed at cold start.

- **Detect malfunctions of the catalyst advanced idling retard angle control. (P050B)**

Judge as NG when ECM is not controlling the angle properly during catalyst advanced idling retard angle control.

- Final ignition timing diagnosis

Judge as NG when actual retard amount is under the specified value at cold start.

GETtheMANUALS.org

2. ENABLE CONDITIONS

Secondary Parameters	Enable Conditions
<Exhaust gas temperature diagnosis>	
Atmospheric pressure	≥ 75 kPa (563 mmHg, 22.2 inHg)
Battery voltage	> 10.9 V
Engine condition	In operation
Vehicle speed	≤ 2 km/h (1.2 MPH)
Elapsed time after gear position change (P ←→ D or N ←→ D)	≥ 3000 ms
ISC feedback	In operation
Throttle opening angle	< 0.37 °
Fuel property	Not extremely low volatility
Target retard amount	≥ 6 °CA
<Idle speed diagnosis>	
Atmospheric pressure	≥ 75 kPa (563 mmHg, 22.2 inHg)
Battery voltage	> 10.9 V
Engine condition	In operation
Vehicle speed	≤ 2 km/h (1.2 MPH)
Engine coolant temperature	≤ 60 °C (140 °F)
Intake air amount sum value	≤ Value of Map 1
Elapsed time after gear position change (P ←→ D or N ←→ D)	≥ 3000 ms
Throttle opening angle	< 0.37 °
Fuel property	Not extremely low volatility
Elapsed time after starting the engine	≥ 2000 ms
<Final ignition timing diagnosis>	
Atmospheric pressure	≥ 75 kPa (563 mmHg, 22.2 inHg)
Battery voltage	> 10.9 V
Engine condition	In operation
Vehicle speed	≤ 2 km/h (1.2 MPH)
Engine coolant temperature	≤ 60 °C (140 °F)
Intake air amount sum value	≤ Value of Map 2
Elapsed time after gear position change (P ←→ D or N ←→ D)	≥ 3000 ms
Throttle opening angle	< 0.37 °
Fuel property	Not extremely low volatility
Target retard amount	≥ Value from Map 3

Map 1

Engine coolant temperature at engine starting °C (°F)	–40 (–40)	–30 (–22)	–20 (–4)	–10 (14)	0 (32)	10 (50)	20 (68)	30 (86)
Intake air amount sum value g (oz)	2300 (81.12)	2170 (76.54)	2040 (71.95)	1490 (52.55)	1070 (37.74)	780 (27.51)	630 (22.22)	560 (19.75)

Engine coolant temperature at engine starting °C (°F)	40 (104)	50 (122)	60 (140)	70 (158)	80 (176)	90 (194)	100 (212)	110 (230)
Intake air amount sum value g (oz)	520 (18.34)	460 (16.22)	360 (12.7)	360 (12.7)	360 (12.7)	360 (12.7)	360 (12.7)	360 (12.7)

GETtheMANUALS.org

Map 2

Engine coolant temperature at engine starting °C (°F)	–40 (–40)	–30 (–22)	–20 (–4)	–10 (14)	0 (32)	10 (50)	20 (68)	30 (86)
Intake air amount sum value g (oz)	2300 (81.12)	2170 (76.54)	2040 (71.95)	1490 (52.55)	1070 (37.74)	780 (27.51)	630 (22.22)	560 (19.75)

Engine coolant temperature at engine starting °C (°F)	40 (104)	50 (122)	60 (140)	70 (158)	80 (176)	90 (194)	100 (212)	110 (230)
Intake air amount sum value g (oz)	520 (18.34)	460 (16.22)	360 (12.7)	360 (12.7)	360 (12.7)	360 (12.7)	360 (12.7)	360 (12.7)

Map 3

Engine coolant temperature	–40 °C (–40 °F)	–30 °C (–22 °F)	–20 °C (–4 °F)	–10 °C (14 °F)	0 °C (32 °F)	10 °C (50 °F)	20 °C (68 °F)	30 °C (86 °F)	40 °C (104 °F)	50 °C (122 °F)	60 °C (140 °F)
Target retard amount	5 °CA	5 °CA	5 °CA	5 °CA	5 °CA	5 °CA	5 °CA	5 °CA	5 °CA	5 °CA	5 °CA

3. GENERAL DRIVING CYCLE

Perform the diagnosis at cold start.

4. DIAGNOSTIC METHOD

- **Exhaust gas temperature diagnosis**

Abnormality Judgment

Calculate the estimated exhaust gas temperature when the diagnostic enable condition is established. Judge as NG when the following conditions are established.

Judgment Value

Malfunction Criteria	Threshold Value
Estimated exhaust gas temperature	< Value of Map 4

Map 4

Engine coolant temperature at engine starting	–30 °C (–22 °F)	–20 °C (–4 °F)	–10 °C (14 °F)	0 °C (32 °F)	10 °C (50 °F)	20 °C (68 °F)	30 °C (86 °F)	40 °C (104 °F)	50 °C (122 °F)	60 °C (140 °F)
Threshold Value	200 °C (392 °F)	200 °C (392 °F)	200 °C (392 °F)	225 °C (437 °F)	225 °C (437 °F)	220 °C (428 °F)	210 °C (410 °F)	200 °C (392 °F)	190 °C (374 °F)	190 °C (374 °F)

Time Needed for Diagnosis: 14 seconds

Malfunction Indicator Light Illumination: Illuminates when malfunction occurs in 2 continuous driving cycles.

Normality Judgment

Judge as OK and clear the NG if the following conditions are established.

Judgment Value

Malfunction Criteria	Threshold Value
Estimated exhaust gas temperature	≥ Value of Map 4

Time Needed for Diagnosis: Less than 1 second

GETtheMANUALS.org

- **Idle speed diagnosis**

Abnormality Judgment
Judge as NG when the following conditions are established.
Judgment Value

Malfunction Criteria	Threshold Value
Actual engine speed – Target engine speed	< – 125 rpm

Time Needed for Diagnosis: 5000 ms
Malfunction Indicator Light Illumination: Illuminates when malfunction occurs in 2 continuous driving cycles.
Normality Judgment
Judge as OK and clear the NG if the following conditions are established.
Judgment Value

Malfunction Criteria	Threshold Value
Actual engine speed – Target engine speed	≥ – 125 rpm

Time Needed for Diagnosis: 5000 ms

- **Final ignition timing diagnosis**

Abnormality Judgment
Judge as NG when the following conditions are established.
Judgment Value

Malfunction Criteria	Threshold Value
Final ignition timing – ignition timing during CSERS* *: Ignition timing during CSERS (Cold Start Emission Reduction Strategy) = Base ignition timing – retard amount	> Value of Map 5

Map 5

Engine coolant temperature	–40 °C (–40 °F)	–30 °C (–22 °F)	–20 °C (–4 °F)	–10 °C (14 °F)	0 °C (32 °F)	10 °C (50 °F)	20 °C (68 °F)	30 °C (86 °F)	40 °C (104 °F)	50 °C (122 °F)	60 °C (140 °F)
Threshold Value	5 °CA	5 °CA	5 °CA	5 °CA	5 °CA	5 °CA	5 °CA	5 °CA	5 °CA	5 °CA	5 °CA

Time Needed for Diagnosis: 5000 ms
Malfunction Indicator Light Illumination: Illuminates when malfunction occurs in 2 continuous driving cycles.
Normality Judgment
Judge as OK and clear the NG if the following conditions are established.
Judgment Value

Malfunction Criteria	Threshold Value
Final ignition timing – ignition timing during CSERS* *: Ignition timing during CSERS (Cold Start Emission Reduction Strategy) = Base ignition timing – retard amount	≤ Value of Map 5

Time Needed for Diagnosis: 5000 ms

GETtheMANUALS.org

DV:DTC P050B COLD START IGNITION TIMING PERFORMANCE

1. OUTLINE OF DIAGNOSIS

NOTE:
For the detection standard, refer to DTC P050A. <Ref. to GD(H6DO)-194, DTC P050A COLD START IDLE AIR CONTROL SYSTEM PERFORMANCE, Diagnostic Trouble Code (DTC) Detecting Criteria.>

GETtheMANUALS.org

DW:DTC P0512 STARTER REQUEST CIRCUIT

1. OUTLINE OF DIAGNOSIS

Detect the open or short circuit of starter SW.
Judge as ON NG when the starter SW signal remains ON.

2. ENABLE CONDITION

Secondary Parameters	Enable Conditions
None	

3. GENERAL DRIVING CYCLE

Always perform the diagnosis continuously.

4. DIAGNOSTIC METHOD

- **Abnormality Judgment**

If the duration of time while the following conditions are met is longer than the time indicated, judge as NG.

Judgment Value

Malfunction Criteria	Threshold Value
Engine condition	After engine starting
Starter OFF signal	Not detected
Battery voltage	≥ 8 V

Time Needed for Diagnosis: 30000 ms
Malfunction Indicator Light Illumination: Illuminates when malfunction occurs in 2 continuous driving cycles.

- **Normality Judgment**

Judge as OK and clear the NG if the continuous time while the following conditions are established is more than the predetermined time.

Judgment Value

Malfunction Criteria	Threshold Value
Starter OFF signal	Detected
Battery voltage	≥ 8 V

Time Needed for Diagnosis: Less than 1 second

GETtheMANUALS.org

DX:DTC P0513 INCORRECT IMMOBILIZER KEY

1. OUTLINE OF DIAGNOSIS

DTC	Item	Outline of diagnosis
P0513	Incorrect Immobilizer Key	Incorrect immobilizer key (Use of unregistered key in body integrated unit)
P1570	Antenna	Faulty antenna
P1571	Reference Code Incompatibility	Reference code incompatibility between body integrated unit and ECM
P1572	IMM Circuit Failure (Except Antenna Circuit)	Communication failure between body integrated unit and ECM
P1574	Key Communication Failure	Failure of body integrated unit to verify key (transponder) ID code or transponder failure
P1576	EGI Control Module EEPROM	ECM malfunctioning
P1577	IMM Control Module EEPROM	Body integrated unit malfunctioning
P1578	Meter Failure	Reference code incompatibility between body integrated unit and combination meter

2. ENABLE CONDITION

When starting the engine.

3. GENERAL DRIVING CYCLE

Perform the diagnosis only after starting the engine.

4. DIAGNOSTIC METHOD

Judge as NG when the conditions for the outline of the diagnosis of the top are established.

GETtheMANUALS.org

DY:DTC P0604 INTERNAL CONTROL MODULE RANDOM ACCESS MEMORY (RAM) ERROR

1. OUTLINE OF DIAGNOSIS

Detect the malfunction of microcomputer (RAM).
When there is a problem in the CPU normal RAM, judge as NG.
If it is possible to write data to the whole area of RAM in the initial routine, and is possible to read the same data, it is judged as OK, and if not, NG.

2. ENABLE CONDITION

Secondary Parameters	Enable Conditions
None	

Diagnosis with the initial routine.

3. GENERAL DRIVING CYCLE

Perform the diagnosis as soon as the ignition switch is turned to ON.

4. DIAGNOSTIC METHOD

- **Abnormality Judgment**

Judge as NG when the following conditions are established.

Judgment Value

Malfunction Criteria	Threshold Value
Write the specified value to RAM and then read.	The written value cannot be read.

Time Needed for Diagnosis: Less than 1 second
Malfunction Indicator Light Illumination: Illuminates as soon as a malfunction occurs.

- **Normality Judgment**

Judge as OK and clear the NG if the following conditions are established.

Judgment Value

Malfunction Criteria	Threshold Value
Write the specified value to RAM and then read.	The written value can be read.

Time Needed for Diagnosis: Less than 1 second

GETtheMANUALS.org

DZ:DTC P0605 INTERNAL CONTROL MODULE READ ONLY MEMORY (ROM) ERROR

1. OUTLINE OF DIAGNOSIS

Judge as NG when SUM value of ROM is outside the standard value.

2. ENABLE CONDITION

Secondary Parameters	Enable Conditions
Ignition switch	ON

3. GENERAL DRIVING CYCLE

Always perform the diagnosis continuously.

4. DIAGNOSTIC METHOD

Abnormality Judgment

Judge as NG if the criteria below are met.

Judgment Value

Malfunction Criteria	Threshold Value
SUM value of ROM	Standard

Time Needed for Diagnosis: Undetermined
Malfunction Indicator Light Illumination: Illuminates as soon as a malfunction occurs.

GETtheMANUALS.org

EA:DTC P0607 THROTTLE CONTROL SYSTEM CIRCUIT RANGE/PERFORMANCE

1. OUTLINE OF DIAGNOSIS

Judge as NG when any one of the followings is established.
(1) Monitoring IC operates abnormally. (Monitoring IC malfunction)
(2) Input amplifier circuit of throttle position sensor 1 operates abnormally. (fourfold amplifier malfunction)
(3) CPU operates abnormally. (Instruction/flow check)
(4) A/D converter operates abnormally. (ADC malfunction)
(5) EEPROM operates abnormally. (EEPROM malfunction)
(6) Output IC operates abnormally. (Output driver malfunction)

2. COMPONENT DESCRIPTION

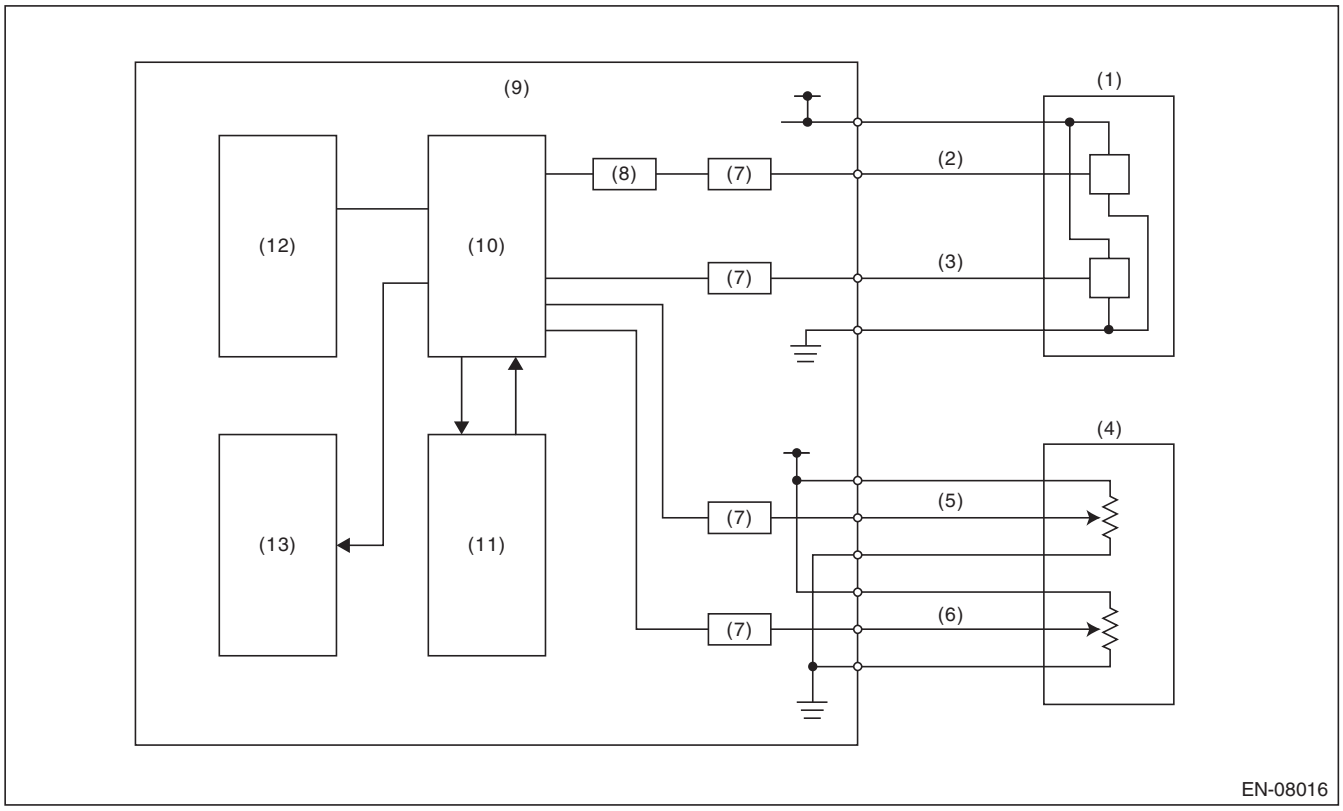

(1)	Throttle position sensor	(6)	Accelerator pedal position sensor 2	(10)	CPU
(2)	Throttle position sensor 1	(7)	I/F circuit	(11)	Monitoring IC
(3)	Throttle position sensor 2	(8)	Amplifier circuit	(12)	EEPROM
(4)	Accelerator pedal position sensor	(9)	Engine control module (ECM)	(13)	Output IC
(5)	Accelerator pedal position sensor 1				

GETtheMANUALS.org

3. ENABLE CONDITION

Secondary Parameters	Enable Conditions
(1) Battery voltage	≥ 6 V
(2) Ignition switch	ON
(2) Battery voltage	≥ 6 V
(3) Ignition switch	ON
(3) ETC control	Permitted
(4) Ignition switch	ON
(4) Battery voltage	≥ 6 V
(5) Starter switch	OFF
(5) Battery voltage	> 6 V
(6) Ignition switch	ON
(6) Battery voltage	≥ 10.9 V

4. GENERAL DRIVING CYCLE

Always perform the diagnosis continuously.

5. DIAGNOSTIC METHOD

Judge as OK and clear the NG when the malfunction criteria below are met.

Judgment Value

Malfunction Criteria	Threshold Value
(1) Monitoring IC operation	The result and estimated value match.
(2) | Throttle position sensor 1 opening angle – (Throttle position sensor 1 opening angle after passing amplifier)/4 |	< 3 °
(3) Main CPU calculation result	The result and estimated value match.
(4) | Standard voltage – Voltage reading |	< 0.078125 V
(5) EEPROM writing	Writing completed
(6) Communication with output IC	Possible to communicate

Time Needed for Diagnosis:
(1): 200 ms
(2): 24 ms
(3): 192 ms
(4): 200 ms
(5): 48 ms
(6): 2500 ms
Malfunction Indicator Light Illumination: Illuminates as soon as a malfunction occurs.

GETtheMANUALS.org

EB:DTC P0638 THROTTLE ACTUATOR CONTROL RANGE/PERFORMANCE (BANK 1)

1. OUTLINE OF DIAGNOSIS

Judge as NG when the target opening angle and actual opening angle is mismatched or the current to motor is the specified duty or more for specified time continuously.

2. COMPONENT DESCRIPTION

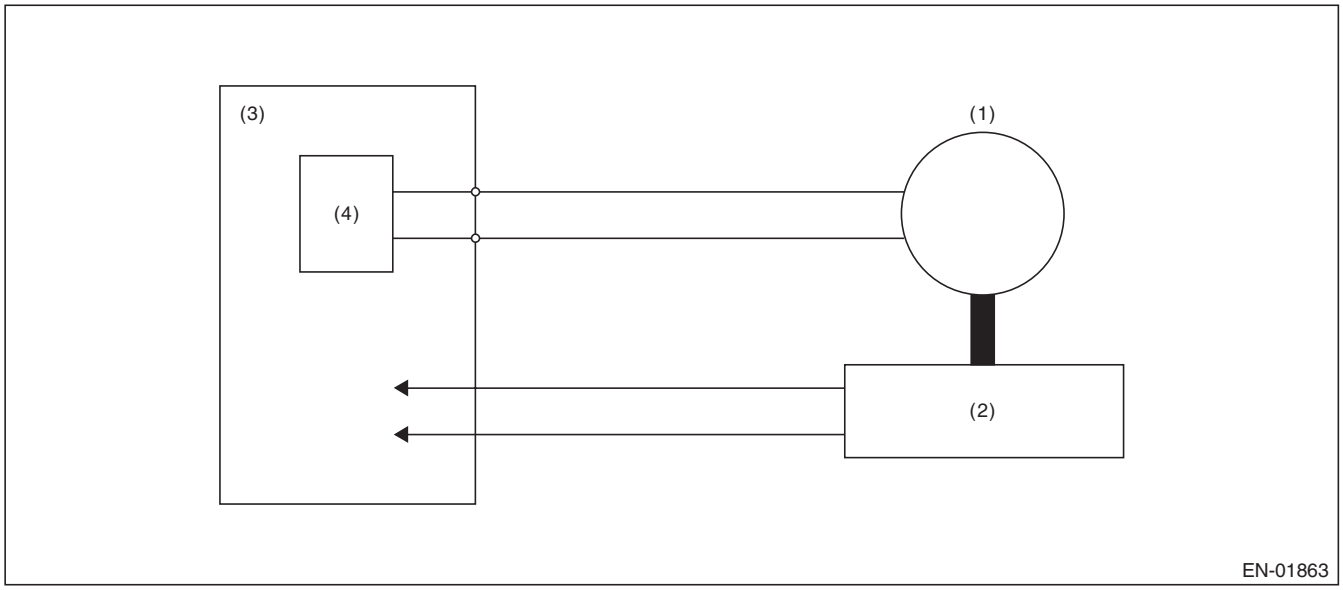

(1) Motor
(2) Throttle position sensor
(3) Engine control module (ECM)
(4) Drive circuit

3. ENABLE CONDITION

Secondary Parameters	Enable Conditions
Ignition switch	ON
Normal operation of electronic throttle control	ON

4. GENERAL DRIVING CYCLE

Always perform the diagnosis continuously when the electronic throttle control is operating.

5. DIAGNOSTIC METHOD

Judge as OK and clear the NG when the malfunction criteria below are met.

Judgment Value

Malfunction Criteria	Threshold Value
Difference between target opening angle and actual opening angle	Within the OK range of **judgment value detail**
Output duty to drive circuit	< 95 %

Time Needed for Diagnosis:

- Difference between target opening angle and actual opening angle:
  - NG judgment: Refer to the **judgment time detail**.
  - OK judgment: 2000 ms
- Output duty to drive circuit: 2000 ms

GETtheMANUALS.org

Details of Judgment Value

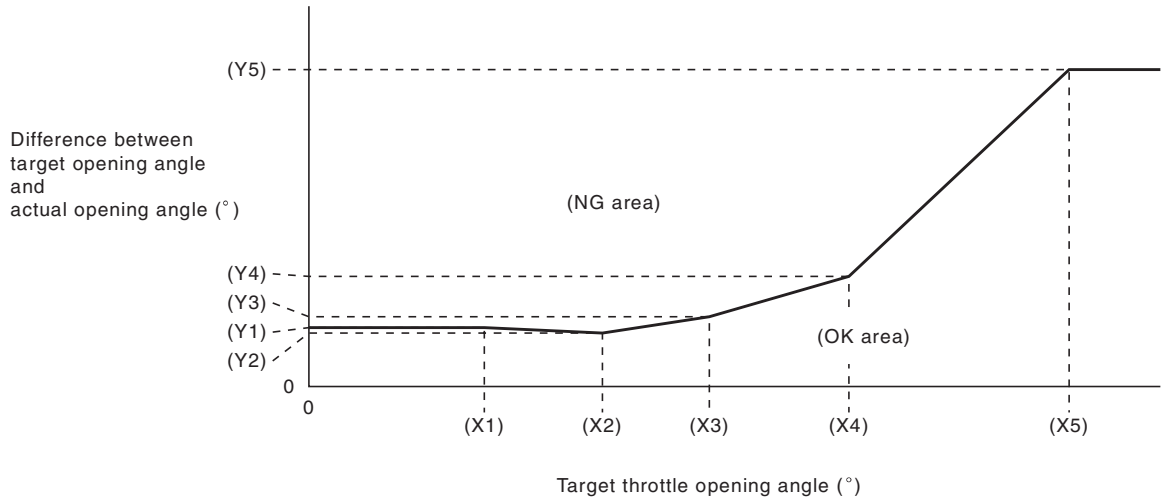

(X1)	6.915 °	(X2)	11.565 °	(X3)	15.785 °
(X4)	21.285 °	(X5)	29.965 °		
(Y1)	4.65 °	(Y2)	4.22 °	(Y3)	5.5 °
(Y4)	8.68 °	(Y5)	25 °		

Judgment time detail

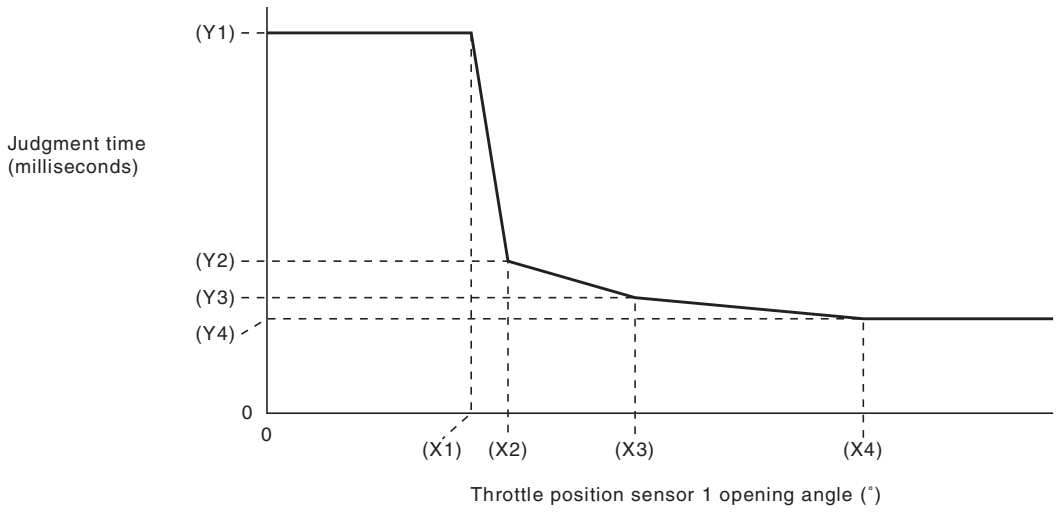

(X1)	8.049999237 °	(X2)	9.5 °	(X3)	14.5 °
(X4)	23.5 °				
(Y1)	1000 ms	(Y2)	400 ms	(Y3)	304 ms
(Y4)	248 ms				

NOTE:
Judgment time is constantly 1000 ms with Actual opening angle ≤ Target opening angle.
Malfunction Indicator Light Illumination: Illuminates as soon as a malfunction occurs.

GETtheMANUALS.org

EC:DTC P0700 TRANSMISSION CONTROL SYSTEM (MIL REQUEST)

1. OUTLINE OF DIAGNOSIS

Judge as NG when there is CAN communication with the TCM and there is a MIL lighting request.

2. ENABLE CONDITION

Secondary Parameters	Enable Conditions
None	

3. GENERAL DRIVING CYCLE

Always perform the diagnosis continuously.

4. DIAGNOSTIC METHOD

- **Abnormality Judgment**

If the duration of time while the following conditions are met is longer than the time indicated, judge as NG.

Judgment Value

Malfunction Criteria	Threshold Value
Battery voltage	≥ 10.9 V
MIL lighting request from TCM	Yes

Time Needed for Diagnosis: 2500 ms
Malfunction Indicator Light Illumination: Illuminates as soon as a malfunction occurs.

- **Normality Judgment**

If the duration of time while the following conditions are met is longer than the time indicated, judge as NG.

Judgment Value

Malfunction Criteria	Threshold Value
Battery voltage	≥ 10.9 V
MIL lighting request from TCM	None

Time Needed for Diagnosis: Less than 1 second

GETtheMANUALS.org

ED:DTC P1152 O2 SENSOR CIRCUIT RANGE/PERFORMANCE (LOW) (BANK1 SENSOR1)

1. OUTLINE OF DIAGNOSIS

Detect that λ value remains low.
Judge as NG when lambda value is abnormal in accordance with λ value of front oxygen (A/F) sensor and running conditions such as vehicle speed, amount of intake air, engine coolant temperature, sub feedback control, etc.

λ value = Actual air fuel ratio/Theoretical air fuel ratio
λ > 1: Lean
λ < 1: Rich

2. COMPONENT DESCRIPTION

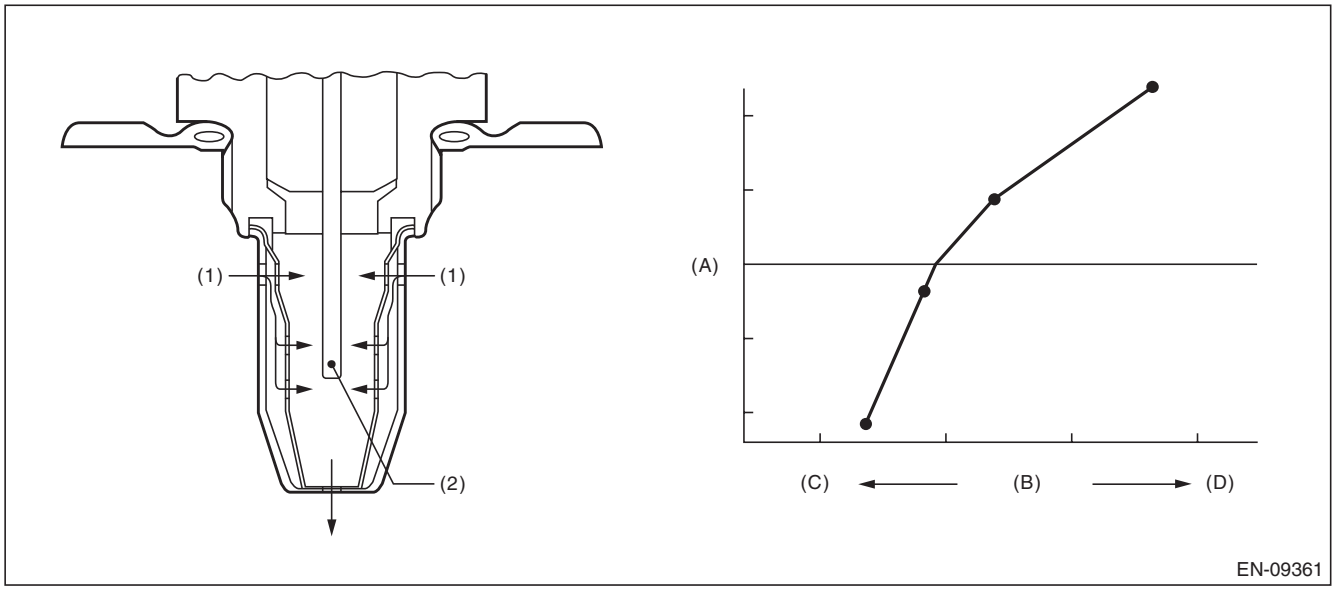

(A)	Electromotive force	(B)	Air fuel ratio	(C)	Lean
(D)	Rich				
(1)	Exhaust gas	(2)	ZrO_2		

GETtheMANUALS.org

3. ENABLE CONDITION

Secondary Parameters	Enable Conditions
Time needed for all secondary parameters to be in enable conditions	≥ 4096 ms
Battery voltage	≥ 10.9 V
Atmospheric pressure	≥ 75 kPa (563 mmHg, 22.2 inHg)
Rear oxygen sensor sub feedback	Execution
Rear oxygen sensor output voltage – Feedback target voltage	– 0.2 V — 0.1 V
or	
Rear oxygen sensor sub feedback compensation coefficient	On Min.
or	
Rear oxygen sensor sub feedback compensation coefficient	On Max.
Elapsed time after starting the engine	≥ 60000 ms
Engine coolant temperature	≥ 75 °C (167 °F)
Vehicle speed	≥ 20 km/h (12.4 MPH)
Amount of intake air	≥ 8 g/s (0.28 oz/s)
Load change at 120°CA	< 0.02 g/rev (0 oz/rev)
Front oxygen (A/F) sensor impedance	0 Ω — 50 Ω
Learning value of evaporation gas density	< 0.2
Total time of operating canister purge	≥ 19.9 s
Targeted lambda value load compensation coefficient	–0.05 — 0.050

4. GENERAL DRIVING CYCLE

Perform diagnosis continuously at a constant speed of 20 km/h (12.4 MPH) or more after 60000 ms have passed since the engine started.

5. DIAGNOSTIC METHOD

- **Abnormality Judgment**

If the duration of time while the following conditions are met is longer than the time indicated, judge as NG.

Judgment Value

Malfunction Criteria	Threshold Value
λ value	< 0.85

Time Needed for Diagnosis: 10000 ms
Malfunction Indicator Light Illumination: Illuminates when malfunction occurs in 2 continuous driving cycles.

- **Normality Judgment**

Judge as OK and clear the NG if the continuous time while the following conditions are established is more than the predetermined time.

Judgment Value

Malfunction Criteria	Threshold Value
λ value	≥ 0.85

Time Needed for Diagnosis: Less than 1 second

GETtheMANUALS.org

EE:DTC P1153 O2 SENSOR CIRCUIT RANGE/PERFORMANCE (HIGH) (BANK1 SENSOR1)

1. OUTLINE OF DIAGNOSIS

Detect that λ value remains high.
Judge as NG when lambda value is abnormal in accordance with λ value of front oxygen (A/F) sensor and running conditions such as vehicle speed, amount of intake air, engine coolant temperature, sub feedback control, etc.

λ value = Actual air fuel ratio/Theoretical air fuel ratio
λ > 1: Lean
λ < 1: Rich

2. COMPONENT DESCRIPTION

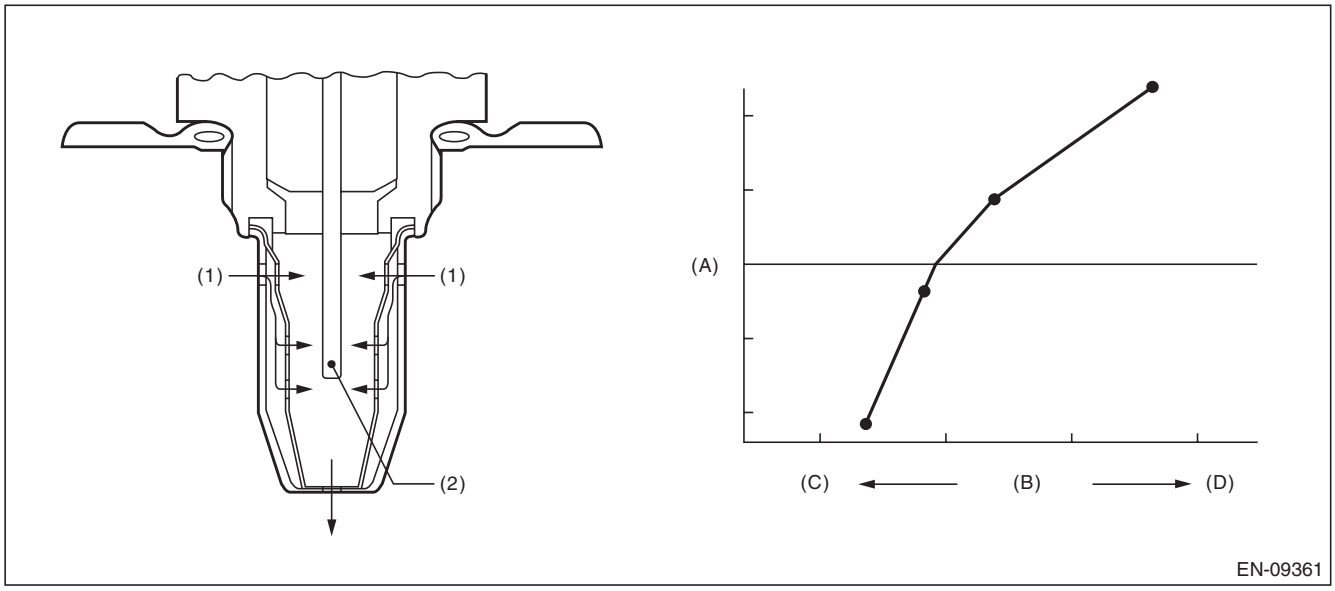

(A)	Electromotive force	(B)	Air fuel ratio	(C)	Lean
(D)	Rich				
(1)	Exhaust gas	(2)	ZrO_2		

GETtheMANUALS.org

3. ENABLE CONDITION

Secondary Parameters	Enable Conditions
Time needed for all secondary parameters to be in enable conditions	≥ 4096 ms
Battery voltage	≥ 10.9 V
Atmospheric pressure	≥ 75 kPa (563 mmHg, 22.2 inHg)
Rear oxygen sensor sub feedback	Execution
Rear oxygen sensor output voltage – Feedback target voltage	– 0.2 V — 0.1 V
or	
Rear oxygen sensor sub feedback compensation coefficient	On Min.
or	
Rear oxygen sensor sub feedback compensation coefficient	On Max.
Elapsed time after starting the engine	≥ 60000 ms
Engine coolant temperature	≥ 75 °C (167 °F)
Vehicle speed	≥ 20 km/h (12.4 MPH)
Amount of intake air	≥ 8 g/s (0.28 oz/s)
Load change at 120°CA	< 0.02 g/rev (0 oz/rev)
Front oxygen (A/F) sensor impedance	0 Ω — 50 Ω
Learning value of evaporation gas density	< 0.2
Total time of operating canister purge	≥ 19.9 s
Targeted lambda value load compensation coefficient	–0.05 — 0.050

4. GENERAL DRIVING CYCLE

Perform diagnosis continuously at a constant speed of 20 km/h (12.4 MPH) or more after 60000 ms have passed since the engine started.

5. DIAGNOSTIC METHOD

- **Abnormality Judgment**

If the duration of time while the following conditions are met is longer than the time indicated, judge as NG.

Judgment Value

Malfunction Criteria	Threshold Value
λ value	> 1.15

Time Needed for Diagnosis: 10000 ms
Malfunction Indicator Light Illumination: Illuminates when malfunction occurs in 2 continuous driving cycles.

- **Normality Judgment**

Judge as OK and clear the NG if the continuous time while the following conditions are established is more than the predetermined time.

Judgment Value

Malfunction Criteria	Threshold Value
λ value	≤ 1.15

Time Needed for Diagnosis: Less than 1 second

GETtheMANUALS.org

EF:DTC P1154 O2 SENSOR CIRCUIT RANGE/PERFORMANCE (LOW) (BANK 2 SENSOR 1)

1. OUTLINE OF DIAGNOSIS

NOTE:
For the detection standard, refer to DTC P1152. <Ref. to GD(H6DO)-208, DTC P1152 O2 SENSOR CIRCUIT RANGE/PERFORMANCE (LOW) (BANK1 SENSOR1), Diagnostic Trouble Code (DTC) Detecting Criteria.>

EG:DTC P1155 O2 SENSOR CIRCUIT RANGE/PERFORMANCE (HIGH) (BANK 2 SENSOR 1)

1. OUTLINE OF DIAGNOSIS

NOTE:
For the detection standard, refer to DTC P1153. <Ref. to GD(H6DO)-210, DTC P1153 O2 SENSOR CIRCUIT RANGE/PERFORMANCE (HIGH) (BANK1 SENSOR1), Diagnostic Trouble Code (DTC) Detecting Criteria.>

GETtheMANUALS.org

EH:DTC P1160 RETURN SPRING FAILURE

1. OUTLINE OF DIAGNOSIS

Judge as NG when the valve is opened more than the default opening angle, but does not move to the close direction with the motor power stopped.

2. COMPONENT DESCRIPTION

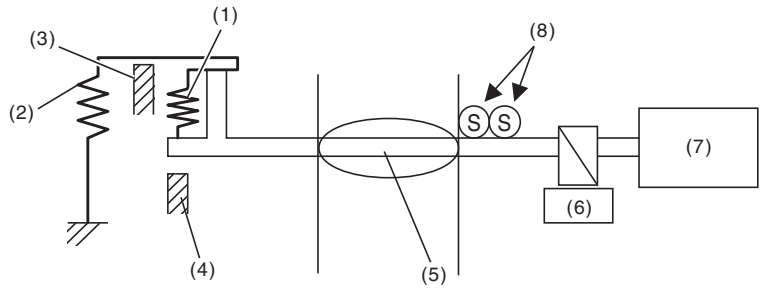

(1)	Opener spring	(4)	Full closed stopper	(7)	DC motor
(2)	Return spring	(5)	Throttle valve	(8)	Main and sub throttle position sensor
(3)	Intermediate stopper	(6)	Gear		

3. ENABLE CONDITION

Secondary Parameters	Enable Conditions
Battery voltage	≥ 6 V
Throttle position sensor	Normal

4. GENERAL DRIVING CYCLE

- Ignition switch ON → OFF
- Ignition switch OFF → ON (Only after clearing memory)

GETtheMANUALS.org

5. DIAGNOSTIC METHOD

- **Abnormality Judgment**

Judge as NG when the following conditions are established.

Judgment Value

Malfunction criteria	Threshold value
Opening variation after continuity is set to OFF	< 2 °

Time Needed for Diagnosis: 24 ms
Malfunction Indicator Light Illumination: Illuminates as soon as a malfunction occurs.

- **Normality Judgment**

Judge as OK and clear the NG if the following conditions are established.

Judgment Value

Malfunction criteria	Threshold value
Opening variation after continuity is set to OFF	≥ 2 °

Time Needed for Diagnosis: 3400 ms

GETtheMANUALS.org

EI: DTC P1443 VENT CONTROL SOLENOID VALVE FUNCTION PROBLEM

1. OUTLINE OF DIAGNOSIS

Detect the abnormal function (stuck closed) of the drain valve.
Judge as NG when fuel tank pressure is low.

2. COMPONENT DESCRIPTION

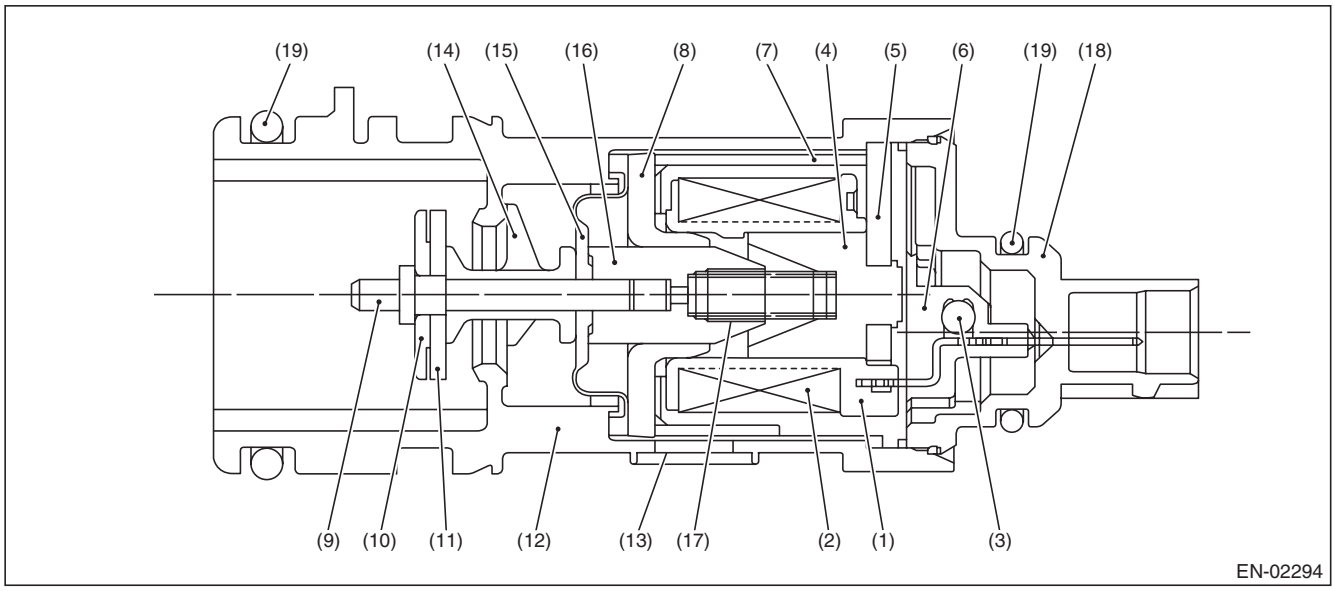

(1)	Bobbin	(8)	Magnetic plate	(14)	Retainer
(2)	Coil	(9)	Shaft	(15)	Diaphragm
(3)	Diode	(10)	Plate	(16)	Movable core
(4)	Stator core	(11)	Valve	(17)	Spring
(5)	End plate	(12)	Housing	(18)	Cover
(6)	Body	(13)	Filter	(19)	O-ring
(7)	Yoke				

3. ENABLE CONDITION

Secondary Parameters	Enable Conditions
Drain valve	Open
Battery voltage	≥ 10.9 V
Atmospheric pressure	≥ 75 kPa (563 mmHg, 22.2 inHg)
Tank pressure when starter is OFF → ON	–0.7 kPa (–5 mmHg, –0.2 inHg) and 0.4 kPa (2.9 mmHg, 0.1 inHg)

4. GENERAL DRIVING CYCLE

Always perform the diagnosis continuously.

GETtheMANUALS.org

5. DIAGNOSTIC METHOD

- **Abnormality Judgment**

If the duration of time while the following conditions are met is longer than the time indicated, judge as NG.

Judgment Value

Malfunction Criteria	Threshold Value
Fuel tank pressure	≤ –4 kPa (–30 mmHg, –1.2 inHg)

Time Needed for Diagnosis: 3000 ms
Malfunction Indicator Light Illumination: Illuminates as soon as a malfunction occurs.

- **Normality Judgment**

Judge as OK and clear the NG if the continuous time while the following conditions are established is more than the predetermined time.

Judgment Value

Malfunction Criteria	Threshold Value
Fuel tank pressure	> –4 kPa (–30 mmHg, –1.2 inHg)
Cumulative time when all the malfunction criteria below are met.	≥ 30000 ms
Purge control solenoid valve duty	Not = 0
Fuel temperature	–10 °C (14 °F) — 70 °C (158 °F)
Intake manifold relative pressure	≥ – 26.7 kPa (– 200 mmHg, – 7.9 inHg)

Time Needed for Diagnosis: Less than 1 second

GETtheMANUALS.org

EJ: DTC P1492 EGR SOLENOID VALVE SIGNAL #1 CIRCUIT MALFUNCTION (LOW INPUT)

1. OUTLINE OF DIAGNOSIS

- Detects open or short circuit of EGR.
- Judge as NG when the ECM output level differs from the actual terminal level.

2. COMPONENT DESCRIPTION

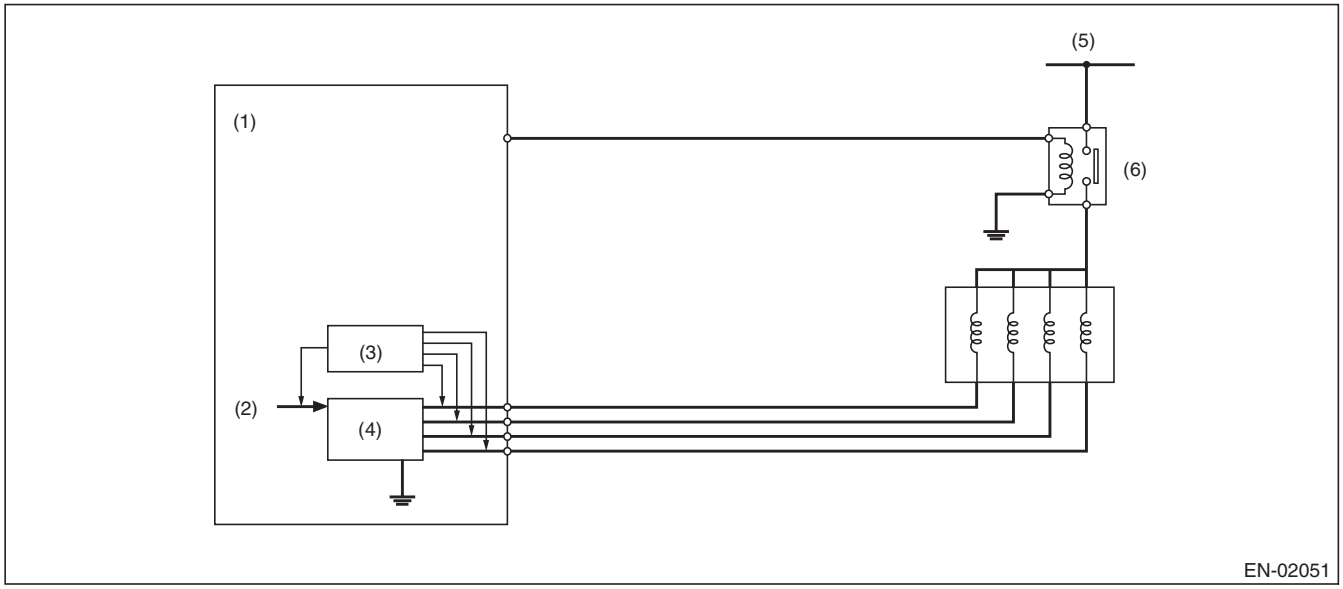

(1)	Engine control module (ECM)	(3)	Detecting circuit	(5)	Battery voltage
(2)	Computer unit (CPU)	(4)	Switch circuit	(6)	Main relay

3. ENABLE CONDITION

Secondary Parameters	Enable Conditions
Elapsed time after starting the engine	≥ 1 s
EGR valve target position	> 0 step
Battery voltage	≥ 10.9 V

4. GENERAL DRIVING CYCLE

Perform diagnosis continuously during EGR operation.

GETtheMANUALS.org

5. DIAGNOSTIC METHOD

- **Abnormality Judgment**

If the duration of time while the following conditions are met is longer than the time indicated, judge as NG.

Judgment Value

Malfunction Criteria	Threshold Value
Terminal voltage level when ECM outputs OFF signal	Low level
or	
Terminal voltage level when EGR operates	Low level

Time Needed for Diagnosis: 2500 ms
Malfunction Indicator Light Illumination: Illuminates as soon as a malfunction occurs.

- **Normality Judgment**

Judge as OK and clear the NG if the continuous time while the following conditions are established is more than the predetermined time.

Judgment Value

Malfunction Criteria	Threshold Value
Terminal voltage level when ECM outputs OFF signal	High level
Terminal voltage level when EGR operates	High level

Time Needed for Diagnosis: 256 ms

GETtheMANUALS.org

EK:DTC P1493 EGR SOLENOID VALVE SIGNAL #1 CIRCUIT MALFUNCTION (HIGH INPUT)

1. OUTLINE OF DIAGNOSIS

- Detects open or short circuit of EGR.
- Judge as NG when the ECM output level differs from the actual terminal level.

2. COMPONENT DESCRIPTION

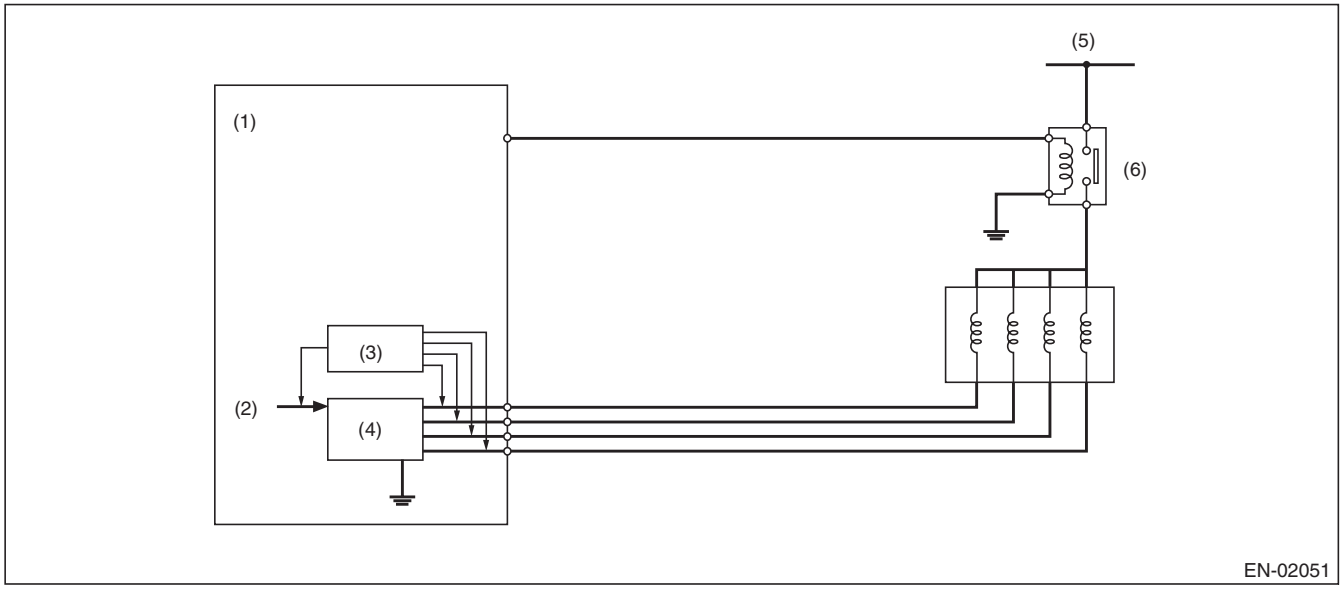

(1)	Engine control module (ECM)	(3)	Detecting circuit	(5)	Battery voltage
(2)	Computer unit (CPU)	(4)	Switch circuit	(6)	Main relay

3. ENABLE CONDITION

Secondary Parameters	Enable Conditions
Elapsed time after starting the engine	≥ 1 s
EGR valve target position	> 0 step
Battery voltage	≥ 10.9 V

4. GENERAL DRIVING CYCLE

Always perform the diagnosis continuously.

GETtheMANUALS.org

5. DIAGNOSTIC METHOD

- **Abnormality Judgment**

If the duration of time while the following conditions are met is longer than the time indicated, judge as NG.

Judgment Value

Malfunction Criteria	Threshold Value
Terminal voltage level when ECM outputs ON signal	High level
or	
Terminal voltage level when EGR operates	High level

Time Needed for Diagnosis: 2500 ms
Malfunction Indicator Light Illumination: Illuminates as soon as a malfunction occurs.

- **Normality Judgment**

Judge as OK and clear the NG if the continuous time while the following conditions are established is more than the predetermined time.

Judgment Value

Malfunction Criteria	Threshold Value
Terminal voltage level when ECM outputs ON signal	Low level
Terminal voltage level when EGR operates	Low level

Time Needed for Diagnosis: 256 ms

GETtheMANUALS.org

EL:DTC P1494 EGR SOLENOID VALVE SIGNAL #2 CIRCUIT MALFUNCTION (LOW INPUT)

1. OUTLINE OF DIAGNOSIS

NOTE:
For the detection standard, refer to DTC P1492. <Ref. to GD(H6DO)-217, DTC P1492 EGR SOLENOID VALVE SIGNAL #1 CIRCUIT MALFUNCTION (LOW INPUT), Diagnostic Trouble Code (DTC) Detecting Criteria.>

EM:DTC P1495 EGR SOLENOID VALVE SIGNAL #2 CIRCUIT MALFUNCTION (HIGH INPUT)

1. OUTLINE OF DIAGNOSIS

NOTE:
For the detection standard, refer to DTC P1493. <Ref. to GD(H6DO)-219, DTC P1493 EGR SOLENOID VALVE SIGNAL #1 CIRCUIT MALFUNCTION (HIGH INPUT), Diagnostic Trouble Code (DTC) Detecting Criteria.>

EN:DTC P1496 EGR SOLENOID VALVE SIGNAL #3 CIRCUIT MALFUNCTION (LOW INPUT)

1. OUTLINE OF DIAGNOSIS

NOTE:
For the detection standard, refer to DTC P1492. <Ref. to GD(H6DO)-217, DTC P1492 EGR SOLENOID VALVE SIGNAL #1 CIRCUIT MALFUNCTION (LOW INPUT), Diagnostic Trouble Code (DTC) Detecting Criteria.>

EO:DTC P1497 EGR SOLENOID VALVE SIGNAL #3 CIRCUIT MALFUNCTION (HIGH INPUT)

1. OUTLINE OF DIAGNOSIS

NOTE:
For the detection standard, refer to DTC P1493. <Ref. to GD(H6DO)-219, DTC P1493 EGR SOLENOID VALVE SIGNAL #1 CIRCUIT MALFUNCTION (HIGH INPUT), Diagnostic Trouble Code (DTC) Detecting Criteria.>

EP:DTC P1498 EGR SOLENOID VALVE SIGNAL #4 CIRCUIT MALFUNCTION (LOW INPUT)

1. OUTLINE OF DIAGNOSIS

NOTE:
For the detection standard, refer to DTC P1492. <Ref. to GD(H6DO)-217, DTC P1492 EGR SOLENOID VALVE SIGNAL #1 CIRCUIT MALFUNCTION (LOW INPUT), Diagnostic Trouble Code (DTC) Detecting Criteria.>

EQ:DTC P1499 EGR SOLENOID VALVE SIGNAL #4 CIRCUIT MALFUNCTION (HIGH INPUT)

1. OUTLINE OF DIAGNOSIS

NOTE:
For the detection standard, refer to DTC P1493. <Ref. to GD(H6DO)-219, DTC P1493 EGR SOLENOID VALVE SIGNAL #1 CIRCUIT MALFUNCTION (HIGH INPUT), Diagnostic Trouble Code (DTC) Detecting Criteria.>

GETtheMANUALS.org

ER:DTC P1518 STARTER SWITCH CIRCUIT LOW INPUT

1. OUTLINE OF DIAGNOSIS

Detect the open or short circuit of starter SW.
Judge as OFF NG when it becomes after engine start despite no starter ON experience.

2. ENABLE CONDITIONS

Secondary Parameters	Enable Conditions
None	

3. GENERAL DRIVING CYCLE

Always perform the diagnosis continuously.

4. DIAGNOSTIC METHOD

- **Abnormality Judgment**

Judge as OFF NG when the following conditions are established.

Judgment Value

Malfunction Criteria	Threshold Value
Vehicle speed	< 1 km/h (0.6 MPH)
Starter ON signal	Not detected
Engine condition	Change from pre-start to post-start
Battery voltage	≥ 8 V

Time Needed for Diagnosis: Less than 1 second
Malfunction Indicator Light Illumination: Illuminates when malfunction occurs in 2 continuous driving cycles.

- **Normality Judgment**

Judge as OFF OK and clear the NG if the following conditions are established.

Judgment Value

Malfunction Criteria	Threshold Value
Starter ON	Experienced
Starter ON diagnosis	No diagnosis experience
Battery voltage	≥ 8 V

Time Needed for Diagnosis: Less than 1 second

GETtheMANUALS.org

ES:DTC P1560 BACK-UP VOLTAGE CIRCUIT MALFUNCTION

1. OUTLINE OF DIAGNOSIS

Detect the open/short circuit of back-up power supply circuit.
Judge as NG when the backup power voltage is low.

2. ENABLE CONDITION

Secondary Parameters	Enable Conditions
None	

3. GENERAL DRIVING CYCLE

Always perform the diagnosis continuously.

4. DIAGNOSTIC METHOD

- **Abnormality Judgment**

If the duration of time while the following conditions are met is longer than the time indicated, judge as NG.

Judgment Value

Malfunction Criteria	Threshold Value
Voltage of back-up power supply	Low
Battery voltage	≥ 10.9 V
Engine condition	After engine starting

Time Needed for Diagnosis: 2500 ms
Malfunction Indicator Light Illumination: Illuminates as soon as a malfunction occurs.

- **Normality Judgment**

Judge as OK and clear the NG if the continuous time while the following conditions are established is more than the predetermined time.

Judgment Value

Malfunction Criteria	Threshold Value
Voltage of back-up power supply	High
Battery voltage	≥ 10.9 V
Engine condition	After engine starting

Time Needed for Diagnosis: Less than 1 second

GETtheMANUALS.org

ET:DTC P1570 ANTENNA

1. OUTLINE OF DIAGNOSIS

NOTE:
For the detection standard, refer to DTC P0513. <Ref. to GD(H6DO)-200, DTC P0513 INCORRECT IMMOBILIZER KEY, Diagnostic Trouble Code (DTC) Detecting Criteria.>

EU:DTC P1571 REFERENCE CODE INCOMPATIBILITY

1. OUTLINE OF DIAGNOSIS

NOTE:
For the detection standard, refer to DTC P0513. <Ref. to GD(H6DO)-200, DTC P0513 INCORRECT IMMOBILIZER KEY, Diagnostic Trouble Code (DTC) Detecting Criteria.>

EV:DTC P1572 IMM CIRCUIT FAILURE (EXCEPT ANTENNA CIRCUIT)

1. OUTLINE OF DIAGNOSIS

NOTE:
For the detection standard, refer to DTC P0513. <Ref. to GD(H6DO)-200, DTC P0513 INCORRECT IMMOBILIZER KEY, Diagnostic Trouble Code (DTC) Detecting Criteria.>

EW:DTC P1574 KEY COMMUNICATION FAILURE

1. OUTLINE OF DIAGNOSIS

NOTE:
For the detection standard, refer to DTC P0513. <Ref. to GD(H6DO)-200, DTC P0513 INCORRECT IMMOBILIZER KEY, Diagnostic Trouble Code (DTC) Detecting Criteria.>

EX:DTC P1576 EGI CONTROL MODULE EEPROM

1. OUTLINE OF DIAGNOSIS

NOTE:
For the detection standard, refer to DTC P0513. <Ref. to GD(H6DO)-200, DTC P0513 INCORRECT IMMOBILIZER KEY, Diagnostic Trouble Code (DTC) Detecting Criteria.>

EY:DTC P1577 IMM CONTROL MODULE EEPROM

1. OUTLINE OF DIAGNOSIS

NOTE:
For the detection standard, refer to DTC P0513. <Ref. to GD(H6DO)-200, DTC P0513 INCORRECT IMMOBILIZER KEY, Diagnostic Trouble Code (DTC) Detecting Criteria.>

EZ:DTC P1578 METER FAILURE

1. OUTLINE OF DIAGNOSIS

NOTE:
For the detection standard, refer to DTC P0513. <Ref. to GD(H6DO)-200, DTC P0513 INCORRECT IMMOBILIZER KEY, Diagnostic Trouble Code (DTC) Detecting Criteria.>

GETtheMANUALS.org

FA:DTC P2088 INTAKE CAMSHAFT POSITION ACTUATOR CONTROL CIRCUIT LOW (BANK 1)

1. OUTLINE OF DIAGNOSIS

Detect open or short circuit of the oil flow control solenoid valve.
Judge as NG when the current is small even though the duty signal is large.

2. ENABLE CONDITION

Secondary Parameters	Enable Conditions
None	

3. GENERAL DRIVING CYCLE

Always perform the diagnosis continuously.

4. DIAGNOSTIC METHOD

- **Abnormality Judgment**

If the duration of time while the following conditions are met is longer than the time indicated, judge as NG.

Judgment Value

Malfunction criteria	Threshold value
Battery voltage	≥ 10.9 V
Oil flow control solenoid valve control duty	≥ 99.61 %
Oil control solenoid valve control present current	< 0.306 A

Time Needed for Diagnosis: 2000 ms
Malfunction Indicator Light Illumination: Illuminates as soon as a malfunction occurs.

- **Normality Judgment**

Judge as OK and clear the NG if the continuous time while the following conditions are established is more than the predetermined time.

Judgment Value

Malfunction criteria	Threshold value
Battery voltage	≥ 10.9 V
Target current value of the oil flow control solenoid valve	≥ 0.14 A
|Target current value of the oil flow control solenoid valve – Oil flow control solenoid valve control current value|	< 0.08 A

Time Needed for Diagnosis: 2000 ms

GETtheMANUALS.org

FB:DTC P2089 INTAKE CAMSHAFT POSITION ACTUATOR CONTROL CIRCUIT HIGH (BANK 1)

1. OUTLINE OF DIAGNOSIS

Detect open or short circuit of oil flow control solenoid valve.
Judge as NG when the current is large even though the duty signal is small.

2. ENABLE CONDITION

Secondary Parameters	Enable Conditions
None	

3. GENERAL DRIVING CYCLE

Always perform the diagnosis continuously.

4. DIAGNOSTIC METHOD

- **Abnormality Judgment**

If the duration of time while the following conditions are met is longer than the time indicated, judge as NG.

Judgment Value

Malfunction criteria	Threshold value
Battery voltage	≥ 10.9 V
Oil flow control solenoid valve control duty	< 0.39 %
Oil control solenoid valve control present current	≥ 0.306 A

Time Needed for Diagnosis: 2000 ms
Malfunction Indicator Light Illumination: Illuminates as soon as a malfunction occurs.

- **Normality Judgment**

Judge as OK and clear the NG if the continuous time while the following conditions are established is more than the predetermined time.

Judgment Value

Malfunction criteria	Threshold value
Battery voltage	≥ 10.9 V
|Target current value of the oil flow control solenoid valve – Oil flow control solenoid valve control current value|	< 0.08 A

Time Needed for Diagnosis: 2000 ms

GETtheMANUALS.org

FC:DTC P2090 EXHAUST CAMSHAFT POSITION ACTUATOR CONTROL CIRCUIT LOW (BANK 1)

1. OUTLINE OF DIAGNOSIS

Detect open or short circuit of the oil flow control solenoid valve.
Judge as NG when the current is small even though the duty signal is large.

2. ENABLE CONDITIONS

Secondary Parameters	Enable Conditions
None	

3. GENERAL DRIVING CYCLE

Always perform the diagnosis continuously.

4. DIAGNOSTIC METHOD

- **Abnormality Judgment**

If the duration of time while the following conditions are met is longer than the time indicated, judge as NG.

Judgment Value

Malfunction Criteria	Threshold Value
Battery voltage	≥ 10.9 V
Oil flow control solenoid valve control duty	≥ 99.61 %
Oil control solenoid valve control present current	< 0.306 A

Time Needed for Diagnosis: 2000 ms
Malfunction Indicator Light Illumination: Illuminates as soon as a malfunction occurs.

- **Normality Judgment**

Judge as OK and clear the NG if the continuous time while the following conditions are established is more than the predetermined time.

Judgment Value

Malfunction Criteria	Threshold Value
Battery voltage	≥ 10.9 V
Target current value of the oil flow control solenoid valve	≥ 0.14 A
|Target current value of the oil flow control solenoid valve – oil flow control solenoid valve control current value|	< 0.08 A

Time Needed for Diagnosis: 2000 ms

GETtheMANUALS.org

FD:DTC P2091 EXHAUST CAMSHAFT POSITION ACTUATOR CONTROL CIRCUIT HIGH (BANK 1)

1. OUTLINE OF DIAGNOSIS

Detect open or short circuit of oil flow control solenoid valve.
Judge as NG when the current is large even though the duty signal is small.

2. ENABLE CONDITIONS

Secondary Parameters	Enable Conditions
None	

3. GENERAL DRIVING CYCLE

Always perform the diagnosis continuously.

4. DIAGNOSTIC METHOD

- **Abnormality Judgment**

If the duration of time while the following conditions are met is longer than the time indicated, judge as NG.

Judgment Value

Malfunction Criteria	Threshold Value
Battery voltage	≥ 10.9 V
Oil flow control solenoid valve control duty	< 0.39 %
Oil control solenoid valve control present current	≥ 0.306 A

Time Needed for Diagnosis: 2000 ms
Malfunction Indicator Light Illumination: Illuminates as soon as a malfunction occurs.

- **Normality Judgment**

Judge as OK and clear the NG if the continuous time while the following conditions are established is more than the predetermined time.

Judgment Value

Malfunction Criteria	Threshold Value
Battery voltage	≥ 10.9 V
|Target current value of the oil flow control solenoid valve – oil flow control solenoid valve control current value|	< 0.08 A

Time Needed for Diagnosis: 2000 ms

GETtheMANUALS.org

FE:DTC P2092 INTAKE CAMSHAFT POSITION ACTUATOR CONTROL CIRCUIT LOW (BANK 2)

1. OUTLINE OF DIAGNOSIS

NOTE:
For the detection standard, refer to DTC P2088. <Ref. to GD(H6DO)-225, DTC P2088 INTAKE CAMSHAFT POSITION ACTUATOR CONTROL CIRCUIT LOW (BANK 1), Diagnostic Trouble Code (DTC) Detecting Criteria.>

FF:DTC P2093 INTAKE CAMSHAFT POSITION ACTUATOR CONTROL CIRCUIT HIGH (BANK 2)

1. OUTLINE OF DIAGNOSIS

NOTE:
For the detection standard, refer to DTC P2089. <Ref. to GD(H6DO)-226, DTC P2089 INTAKE CAMSHAFT POSITION ACTUATOR CONTROL CIRCUIT HIGH (BANK 1), Diagnostic Trouble Code (DTC) Detecting Criteria.>

FG:DTC P2094 EXHAUST CAMSHAFT POSITION ACTUATOR CONTROL CIRCUIT LOW (BANK 2)

1. OUTLINE OF DIAGNOSIS

NOTE:
For the detection standard, refer to DTC P2090. <Ref. to GD(H6DO)-227, DTC P2090 EXHAUST CAMSHAFT POSITION ACTUATOR CONTROL CIRCUIT LOW (BANK 1), Diagnostic Trouble Code (DTC) Detecting Criteria.>

FH:DTC P2095 EXHAUST CAMSHAFT POSITION ACTUATOR CONTROL CIRCUIT HIGH (BANK 2)

1. OUTLINE OF DIAGNOSIS

NOTE:
For the detection standard, refer to DTC P2091. <Ref. to GD(H6DO)-228, DTC P2091 EXHAUST CAMSHAFT POSITION ACTUATOR CONTROL CIRCUIT HIGH (BANK 1), Diagnostic Trouble Code (DTC) Detecting Criteria.>

GETtheMANUALS.org

FI: DTC P2096 POST CATALYST FUEL TRIM SYSTEM TOO LEAN (BANK 1)

1. OUTLINE OF DIAGNOSIS

Detect the malfunction of fuel system from the size of the sub feedback learning value.
Control the sub feedback learning and judge as NG when the learning value is in the lean zone.

2. COMPONENT DESCRIPTION

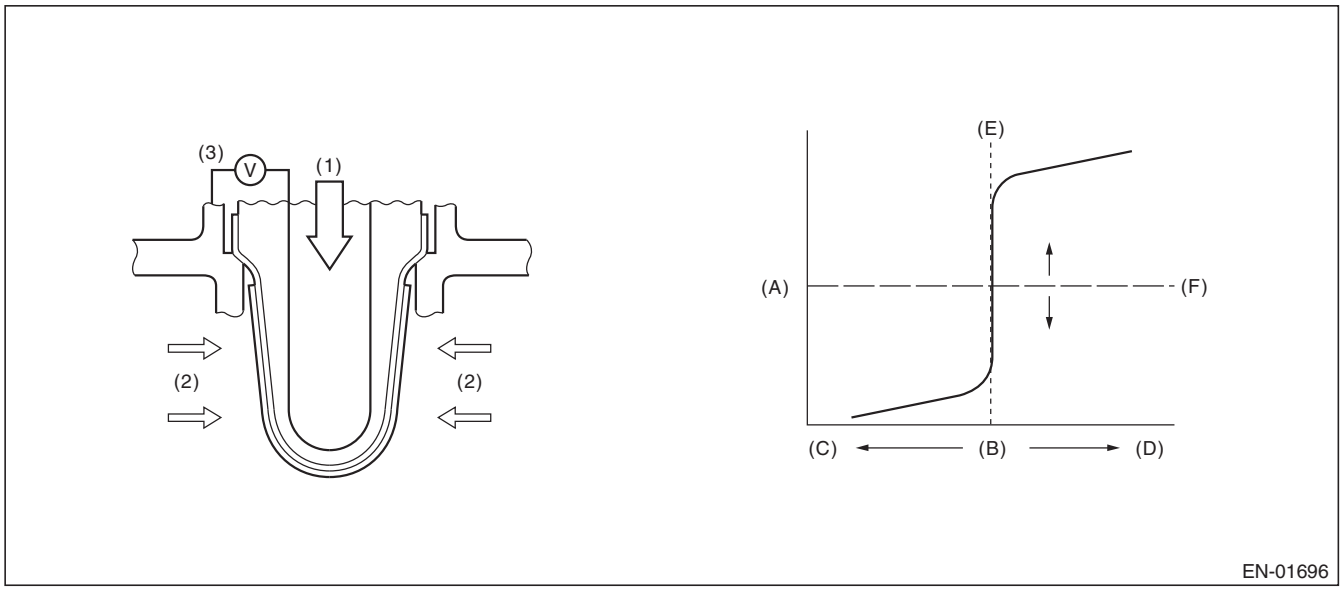

(A)	Electromotive force	(B)	Air fuel ratio	(C)	Rich
(D)	Lean	(E)	Theoretical air fuel ratio	(F)	Comparative voltage
(1)	Atmosphere	(2)	Exhaust gas	(3)	Electromotive force

3. ENABLE CONDITION

Secondary Parameters	Enable Conditions
Conditions for carrying out the sub feedback learning	Completed
Continuous time when all conditions are established.	≥ 1 s

4. GENERAL DRIVING CYCLE

Perform the diagnosis continuously when the vehicle is idling or running at a constant speed of 80 km/h (50 MPH) or more.

GETtheMANUALS.org

5. DIAGNOSTIC METHOD

- **Abnormality Judgment**

If the duration of time while the following conditions are met is longer than the time indicated, judge as NG.

Judgment Value

Malfunction Criteria	Threshold Value
Sub feedback learning value	< –0.032

Time Needed for Diagnosis: 1 s × 1 time(s)
Malfunction Indicator Light Illumination: Illuminates when malfunction occurs in 2 continuous driving cycles.

- **Normality Judgment**

Judge as OK and clear the NG if the continuous time while the following conditions are established is more than the predetermined time.

Judgment Value

Malfunction Criteria	Threshold Value
Sub feedback learning value	≥ –0.032 + 0

Time Needed for Diagnosis: 1 s

GETtheMANUALS.org

FJ: DTC P2097 POST CATALYST FUEL TRIM SYSTEM TOO RICH (BANK 1)

1. OUTLINE OF DIAGNOSIS

Detect the malfunction of fuel system from the size of the sub feedback learning value.
Sub feedback learning is being performed. When the learning value goes to the rich side, judge as NG.

2. COMPONENT DESCRIPTION

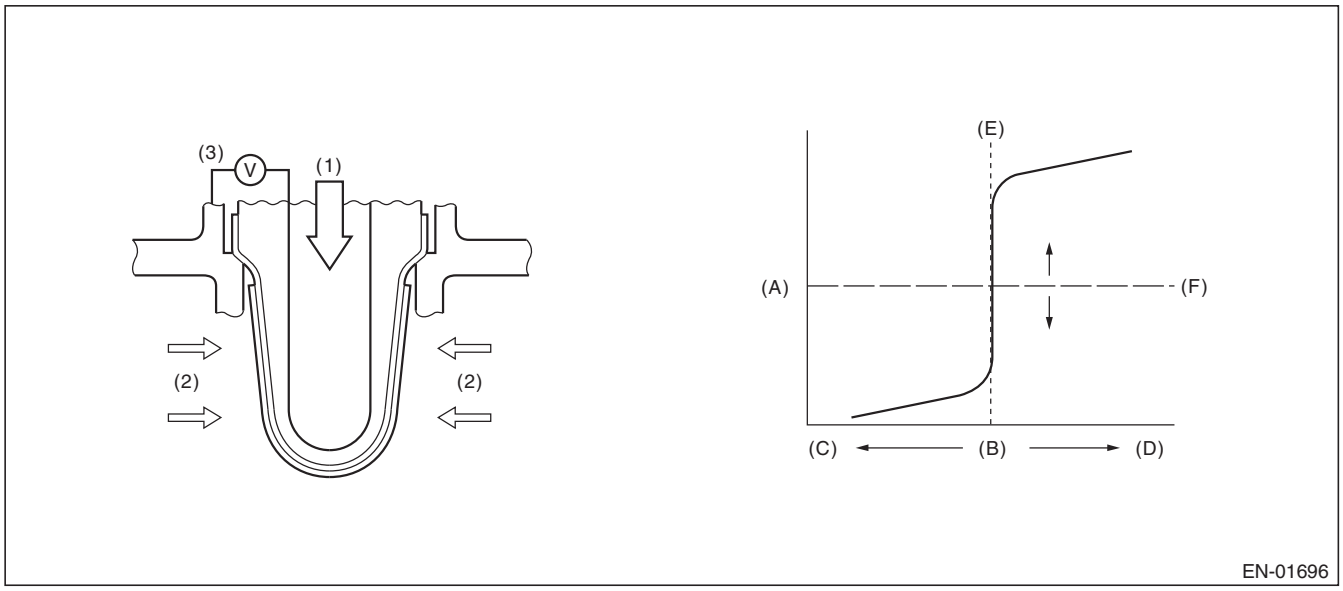

(A)	Electromotive force	(B)	Air fuel ratio	(C)	Rich
(D)	Lean	(E)	Theoretical air fuel ratio	(F)	Comparative voltage
(1)	Atmosphere	(2)	Exhaust gas	(3)	Electromotive force

3. ENABLE CONDITION

Secondary Parameters	Enable Conditions
Conditions for carrying out the sub feedback learning	Completed
Continuous time when all conditions are established.	≥ 1 s

4. GENERAL DRIVING CYCLE

Perform the diagnosis continuously when the vehicle is idling or running at a constant speed of 80 km/h (50 MPH) or more.

GETtheMANUALS.org

5. DIAGNOSTIC METHOD

- **Abnormality Judgment**

If the duration of time while the following conditions are met is longer than the time indicated, judge as NG.

Judgment Value

Malfunction Criteria	Threshold Value
Sub feedback learning value	≥ 0.031

Time Needed for Diagnosis: 1 s × 1 time(s)
Malfunction Indicator Light Illumination: Illuminates when malfunction occurs in 2 continuous driving cycles.

- **Normality Judgment**

Judge as OK and clear the NG if the continuous time while the following conditions are established is more than the predetermined time.

Judgment Value

Malfunction Criteria	Threshold Value
Sub feedback learning value	< 0.031 + 0

Time Needed for Diagnosis: 1 s

FK:DTC P2098 POST CATALYST FUEL TRIM SYSTEM TOO LEAN BANK 2

1. OUTLINE OF DIAGNOSIS

NOTE:
For the detection standard, refer to DTC P2096. <Ref. to GD(H6DO)-230, DTC P2096 POST CATALYST FUEL TRIM SYSTEM TOO LEAN (BANK 1), Diagnostic Trouble Code (DTC) Detecting Criteria.>

FL:DTC P2099 POST CATALYST FUEL TRIM SYSTEM TOO RICH BANK 2

1. OUTLINE OF DIAGNOSIS

NOTE:
For the detection standard, refer to DTC P2097. <Ref. to GD(H6DO)-232, DTC P2097 POST CATALYST FUEL TRIM SYSTEM TOO RICH (BANK 1), Diagnostic Trouble Code (DTC) Detecting Criteria.>

GETtheMANUALS.org

FM:DTC P2101 THROTTLE ACTUATOR CONTROL MOTOR CIRCUIT RANGE/ PERFORMANCE

1. OUTLINE OF DIAGNOSIS

Judge as NG when the motor current becomes large or drive circuit is heated.

2. COMPONENT DESCRIPTION

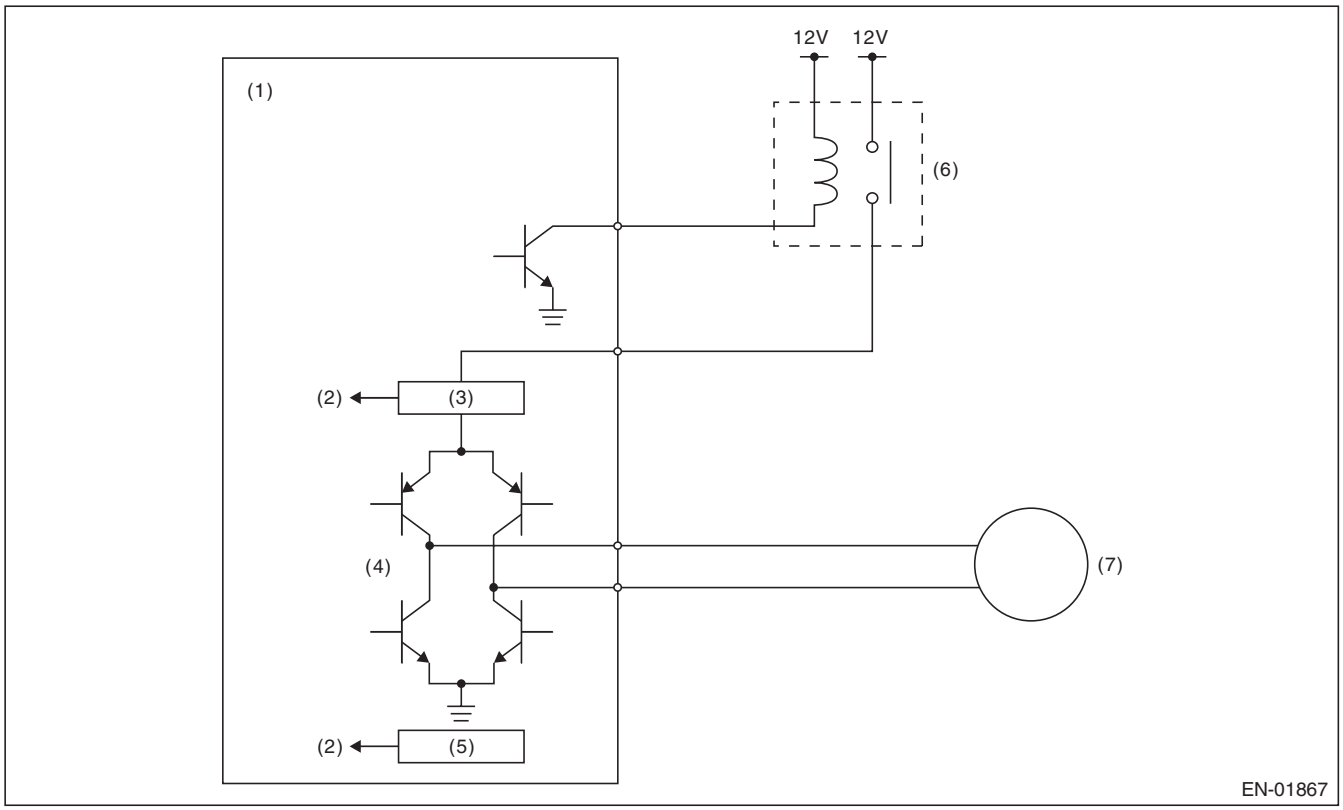

(1)	Engine control module (ECM)	(4)	Drive circuit	(6)	Electronic throttle control relay
(2)	Detecting circuit	(5)	Temperature detection circuit	(7)	Motor
(3)	Overcurrent detection circuit				

3. ENABLE CONDITION

Secondary Parameters	Enable Conditions
Under control of electronic throttle control	ON
CPU communication line sub → main normal judgment	Normal

4. GENERAL DRIVING CYCLE

Always perform the diagnosis continuously.

GETtheMANUALS.org

5. DIAGNOSTIC METHOD

- **Abnormality Judgment**

If the duration of time while the following conditions are met is longer than the time indicated, judge as NG.

Judgment Value

Malfunction criteria	Threshold value
Motor current or Drive circuit inner temperature	> 8 A > 175°C (347°F)

Time Needed for Diagnosis: 512 ms
Malfunction Indicator Light Illumination: Illuminates as soon as a malfunction occurs.

- **Normality Judgment**

Judge as OK and clear the NG if the continuous time while the following conditions are established is more than the predetermined time.

Judgment Value

Malfunction Criteria	Threshold Value
Motor current	≤ 8 A
Drive circuit inner temperature	≤ 175°C (347°F)

Time Needed for Diagnosis: 2000 ms

GETtheMANUALS.org

FN:DTC P2102 THROTTLE ACTUATOR CONTROL MOTOR CIRCUIT LOW

1. OUTLINE OF DIAGNOSIS

Judge as NG when the electronic throttle control power is not supplied even when ECM sets the electronic throttle control relay to ON.

2. COMPONENT DESCRIPTION

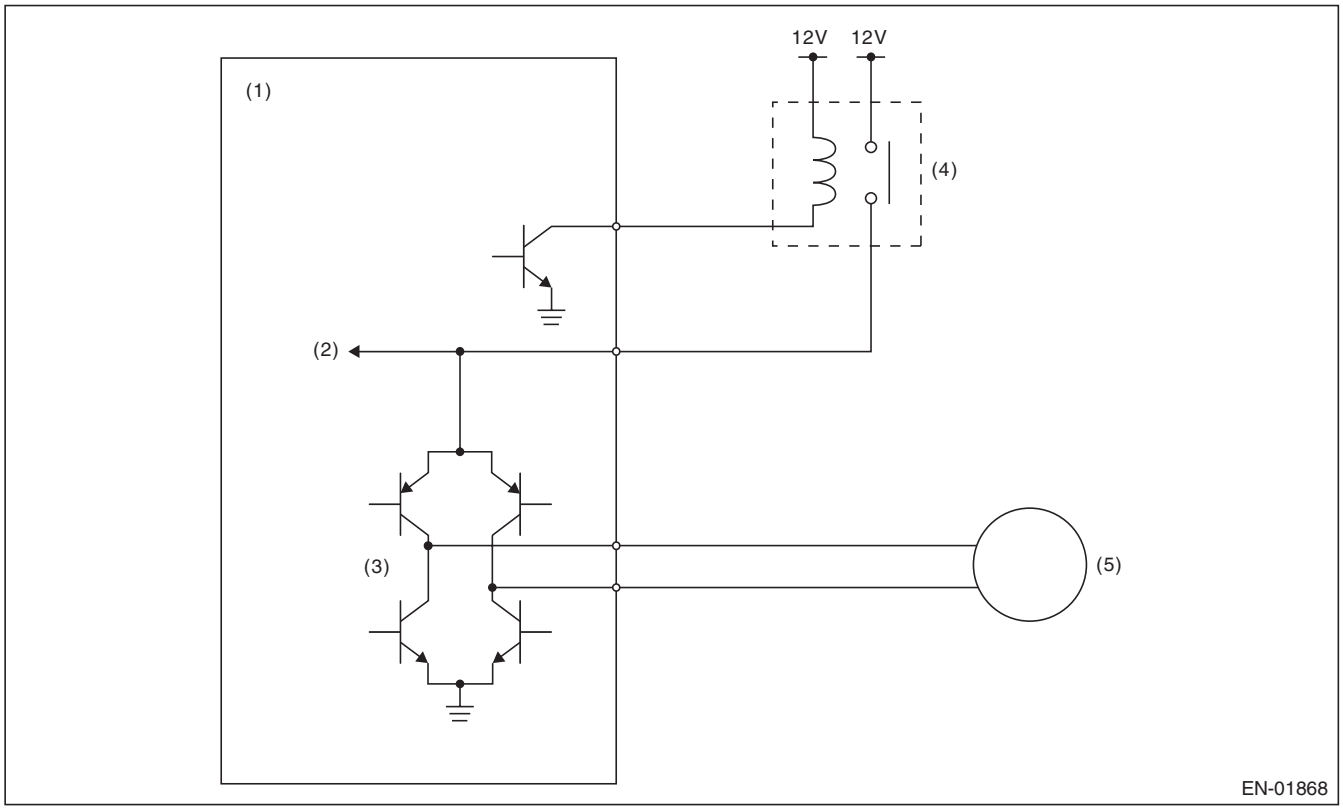

(1) Engine control module (ECM)
(2) Voltage detection circuit
(3) Drive circuit
(4) Electronic throttle control relay
(5) Motor

3. ENABLE CONDITION

Secondary Parameters	Enable Conditions
Battery voltage	≥ 11 V
Electronic throttle control relay output	ON

4. GENERAL DRIVING CYCLE

Always perform the diagnosis continuously.

GETtheMANUALS.org

5. DIAGNOSTIC METHOD

- **Abnormality Judgment**

If the duration of time while the following conditions are met is longer than the time indicated, judge as NG.

Judgment Value

Malfunction criteria	Threshold value
Motor power voltage	≤ 5 V

Time Needed for Diagnosis: 352 ms
Malfunction Indicator Light Illumination: Illuminates as soon as a malfunction occurs.

- **Normality Judgment**

Judge as OK and clear the NG if the continuous time while the following conditions are established is more than the predetermined time.

Judgment Value

Malfunction criteria	Threshold value
Motor power voltage	> 5 V

Time Needed for Diagnosis: 2000 ms

GETtheMANUALS.org

FO:DTC P2103 THROTTLE ACTUATOR CONTROL MOTOR CIRCUIT HIGH

1. OUTLINE OF DIAGNOSIS

Judge as NG when the electronic throttle control power is supplied even when ECM sets the electronic throttle control relay to OFF.

2. COMPONENT DESCRIPTION

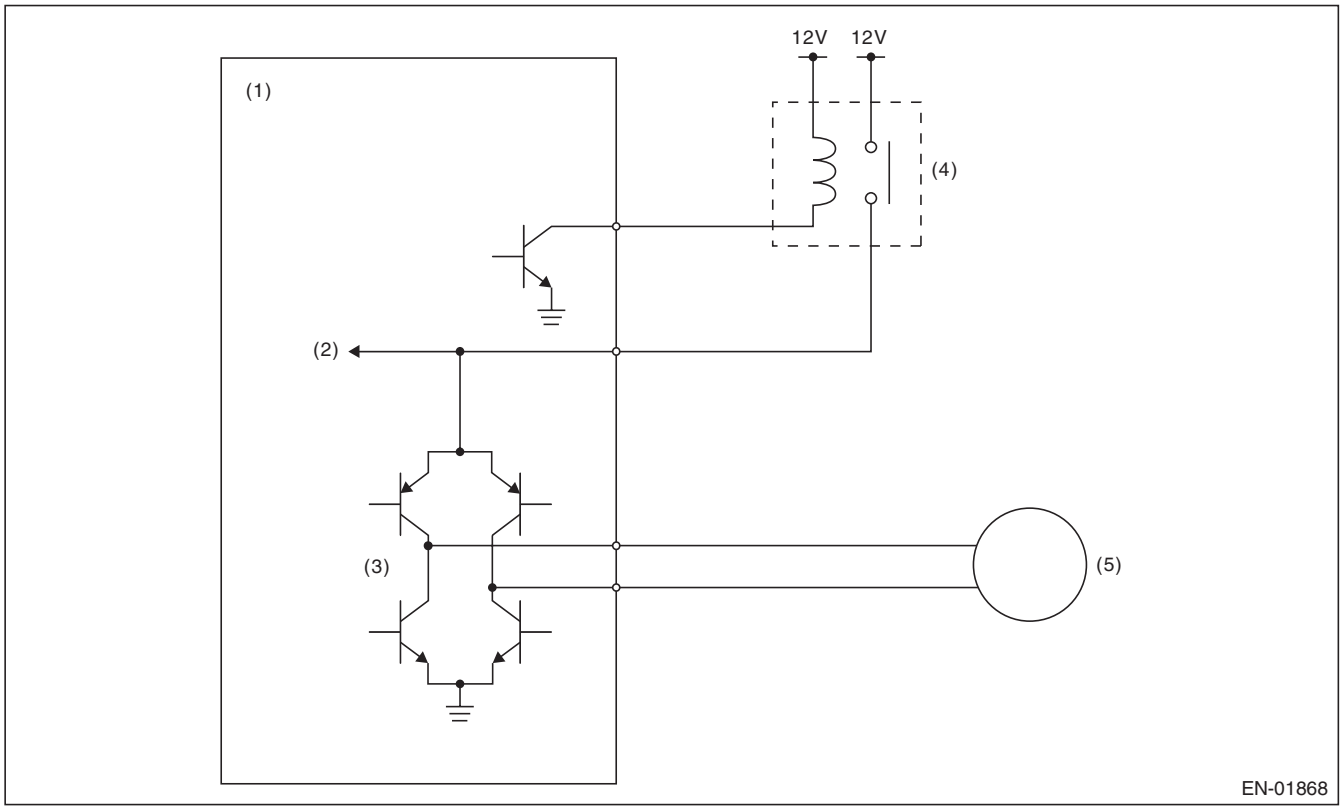

(1)	Engine control module (ECM)	(3)	Drive circuit	(5)	Motor
(2)	Voltage detection circuit	(4)	Electronic throttle control relay		

3. ENABLE CONDITION

Secondary Parameters	Enable Conditions
Battery voltage	≥ 6 V
Electronic throttle control relay output	OFF

4. GENERAL DRIVING CYCLE

- When ignition switch ON → OFF
- Ignition switch OFF → ON (Only after clearing memory)

GETtheMANUALS.org

5. DIAGNOSTIC METHOD

- **Abnormality Judgment**

If the duration of time while the following conditions are met is longer than the time indicated, judge as NG.

Judgment Value

Malfunction criteria	Threshold value
Motor power voltage	≥ 5 V

Time Needed for Diagnosis: 600 ms
Malfunction Indicator Light Illumination: Illuminates as soon as a malfunction occurs.

- **Normality Judgment**

Judge as OK and clear the NG if the continuous time while the following conditions are established is more than the predetermined time.

Judgment Value

Malfunction criteria	Threshold value
Motor power voltage	< 5 V

Time Needed for Diagnosis: 400 ms

GETtheMANUALS.org

FP:DTC P2109 THROTTLE/PEDAL POSITION SENSOR “A” MINIMUM STOP PERFORMANCE

1. OUTLINE OF DIAGNOSIS

Judge as NG when full close point learning cannot conducted or abnormal value is detected.

2. COMPONENT DESCRIPTION

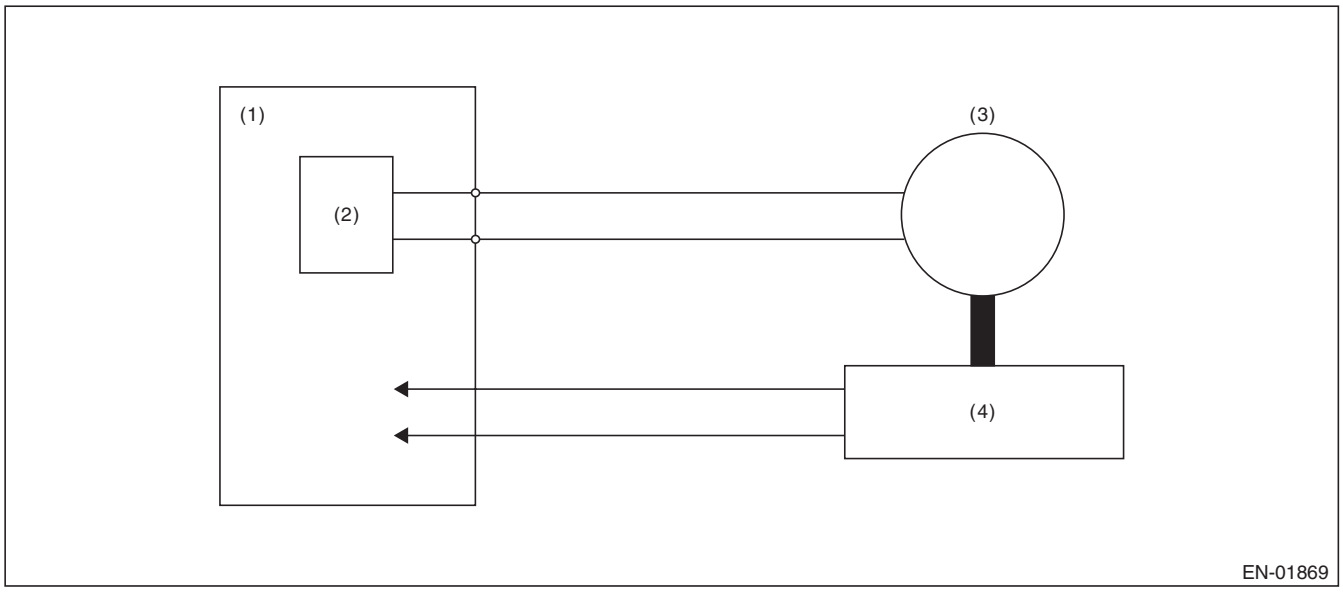

(1) Engine control module (ECM)
(2) Drive circuit
(3) Motor
(4) Throttle position sensor

3. ENABLE CONDITION

Secondary Parameters	Enable Conditions
Ignition switch	ON → OFF
Ignition switch (only after clear memory)	OFF → ON

4. GENERAL DRIVING CYCLE

Perform the diagnosis at full closed point learning.

GETtheMANUALS.org

5. DIAGNOSTIC METHOD

- **Abnormality Judgment**

If the duration of time while the following conditions are met is longer than the time indicated, judge as NG.

Judgment Value

Malfunction Criteria	Threshold Value
Throttle sensor opening angle at full close point learning	< 9.884 ° or > 20.116 °
or	
Throttle opening angle when the ignition switch is ON – Throttle minimum stop position	< 0.887 °

Time Needed for Diagnosis: 8 ms — 80 ms
Malfunction Indicator Light Illumination: Illuminates as soon as a malfunction occurs.

- **Normality Judgment**

Judge as OK and clear the NG if the continuous time while the following conditions are established is more than the predetermined time.

Judgment Value

Malfunction Criteria	Threshold Value
Throttle sensor opening angle at full close point learning	≥ 9.884 ° and ≤ 20.116 °
Throttle opening angle when the ignition switch is ON – Throttle minimum stop position	≥ 0.887 °

Time Needed for Diagnosis: 8 ms

GETtheMANUALS.org

FQ:DTC P2122 THROTTLE/PEDAL POSITION SENSOR/SWITCH “D” CIRCUIT LOW INPUT

1. OUTLINE OF DIAGNOSIS

Detect the open or short circuit of accelerator pedal position sensor 1.
Judge as NG if out of specification.

2. COMPONENT DESCRIPTION

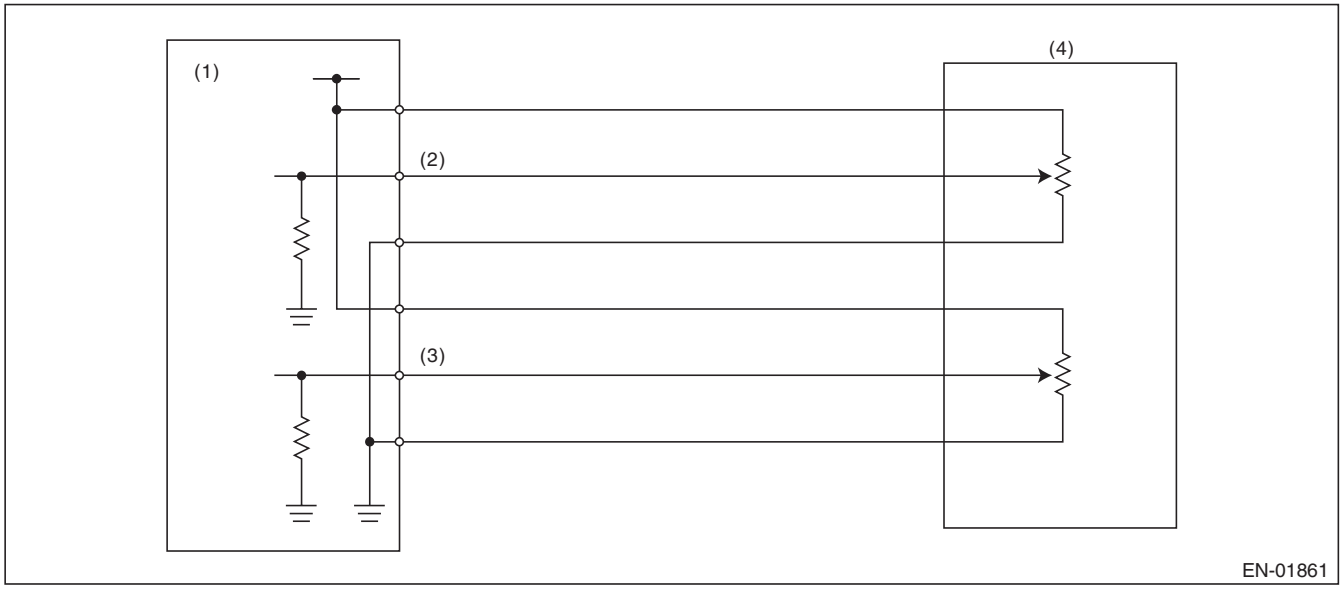

(1) Engine control module (ECM)
(2) Accelerator pedal position sensor 1 signal
(3) Accelerator pedal position sensor 2 signal
(4) Accelerator pedal position sensor

3. ENABLE CONDITION

Secondary Parameters	Enable Conditions
Ignition switch	ON
Battery voltage	≥ 6 V

4. GENERAL DRIVING CYCLE

Always perform the diagnosis continuously.

GETtheMANUALS.org

5. DIAGNOSTIC METHOD

- **Abnormality Judgment**

If the duration of time while the following conditions are met is longer than the time indicated, judge as NG.

Judgment Value

Malfunction criteria	Threshold value
Sensor 1 input voltage	< 0.295 V

Time Needed for Diagnosis: 100 ms
Malfunction Indicator Light Illumination: Illuminates as soon as a malfunction occurs.

- **Normality Judgment**

Judge as OK and clear the NG if the continuous time while the following conditions are established is more than the predetermined time.

Judgment Value

Malfunction criteria	Threshold value
Sensor 1 input voltage	≥ 0.295 V

Time Needed for Diagnosis: 100 ms

GETtheMANUALS.org

FR:DTC P2123 THROTTLE/PEDAL POSITION SENSOR/SWITCH “D” CIRCUIT HIGH INPUT

1. OUTLINE OF DIAGNOSIS

Detect the open or short circuit of accelerator pedal position sensor 1.
Judge as NG if out of specification.

2. COMPONENT DESCRIPTION

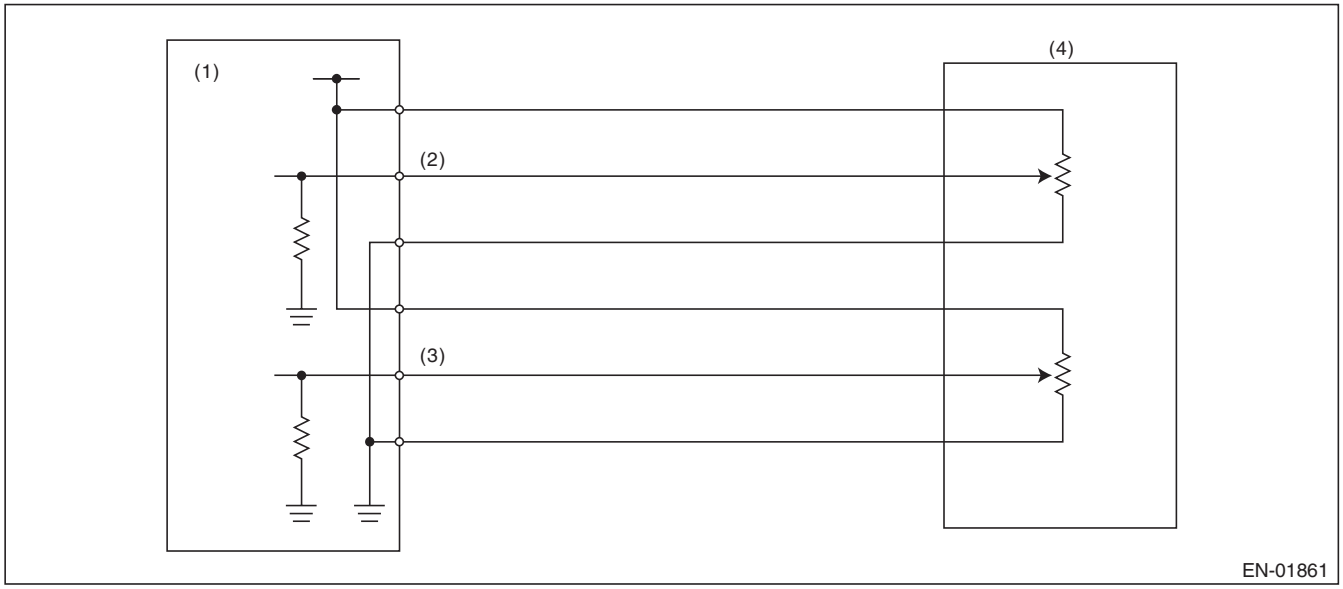

(1) Engine control module (ECM)
(2) Accelerator pedal position sensor 1 signal
(3) Accelerator pedal position sensor 2 signal
(4) Accelerator pedal position sensor

3. ENABLE CONDITION

Secondary Parameters	Enable Conditions
Ignition switch	ON
Battery voltage	≥ 6 V

4. GENERAL DRIVING CYCLE

Always perform the diagnosis continuously.

GETtheMANUALS.org

5. DIAGNOSTIC METHOD

- **Abnormality Judgment**

If the duration of time while the following conditions are met is longer than the time indicated, judge as NG.

Judgment Value

Malfunction criteria	Threshold value
Sensor 1 input voltage	≥ 4.783 V

Time Needed for Diagnosis: 32 ms
Malfunction Indicator Light Illumination: Illuminates as soon as a malfunction occurs.

- **Normality Judgment**

Judge as OK and clear the NG if the continuous time while the following conditions are established is more than the predetermined time.

Judgment Value

Malfunction criteria	Threshold value
Sensor 1 input voltage	< 4.783 V

Time Needed for Diagnosis: 32 ms

GETtheMANUALS.org

FS:DTC P2127 THROTTLE/PEDAL POSITION SENSOR/SWITCH “E” CIRCUIT LOW INPUT

1. OUTLINE OF DIAGNOSIS

Detect the open or short circuit of accelerator pedal position sensor 2.
Judge as NG if out of specification.

2. COMPONENT DESCRIPTION

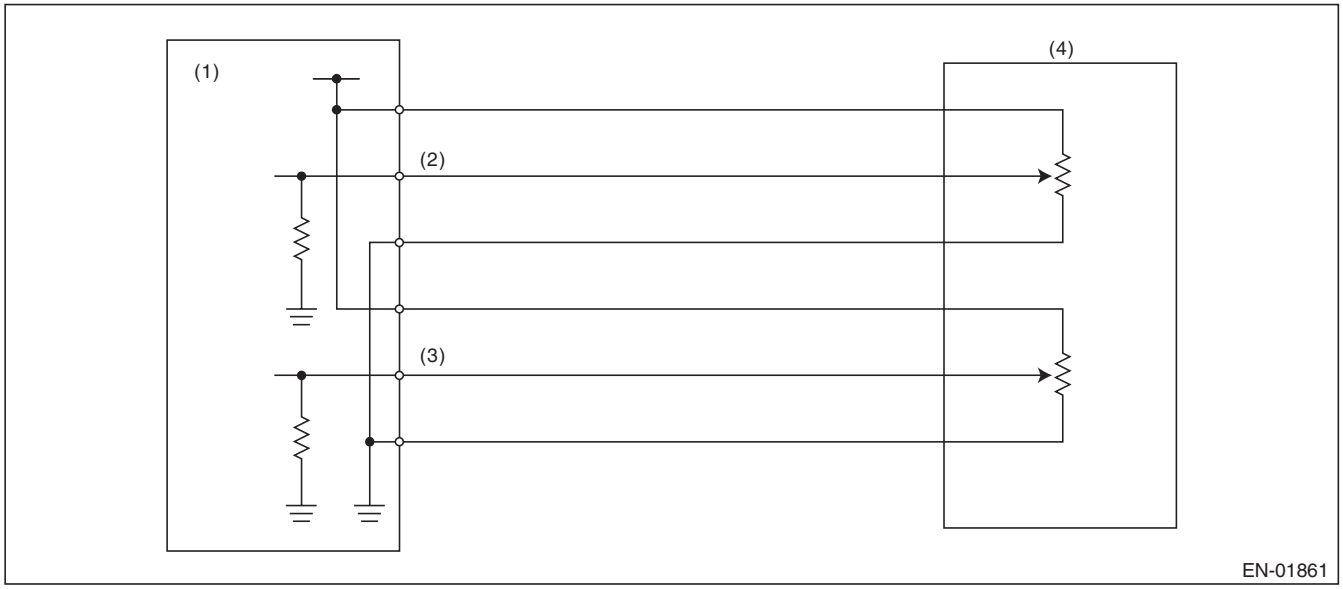

(1) Engine control module (ECM)
(2) Accelerator pedal position sensor 1 signal
(3) Accelerator pedal position sensor 2 signal
(4) Accelerator pedal position sensor

3. ENABLE CONDITION

Secondary Parameters	Enable Conditions
Ignition switch	ON
Battery voltage	≥ 6 V

4. GENERAL DRIVING CYCLE

Always perform the diagnosis continuously.

GETtheMANUALS.org

5. DIAGNOSTIC METHOD

- **Abnormality Judgment**

If the duration of time while the following conditions are met is longer than the time indicated, judge as NG.

Judgment Value

Malfunction criteria	Threshold value
Sensor 2 input voltage	< 0.295 V

Time Needed for Diagnosis: 100 ms
Malfunction Indicator Light Illumination: Illuminates as soon as a malfunction occurs.

- **Normality Judgment**

Judge as OK and clear the NG if the continuous time while the following conditions are established is more than the predetermined time.

Judgment Value

Malfunction criteria	Threshold value
Sensor 2 input voltage	≥ 0.295 V

Time Needed for Diagnosis: 100 ms

GETtheMANUALS.org

FT: DTC P2128 THROTTLE/PEDAL POSITION SENSOR/SWITCH “E” CIRCUIT HIGH INPUT

1. OUTLINE OF DIAGNOSIS

Detect the open or short circuit of accelerator pedal position sensor 2.
Judge as NG if out of specification.

2. COMPONENT DESCRIPTION

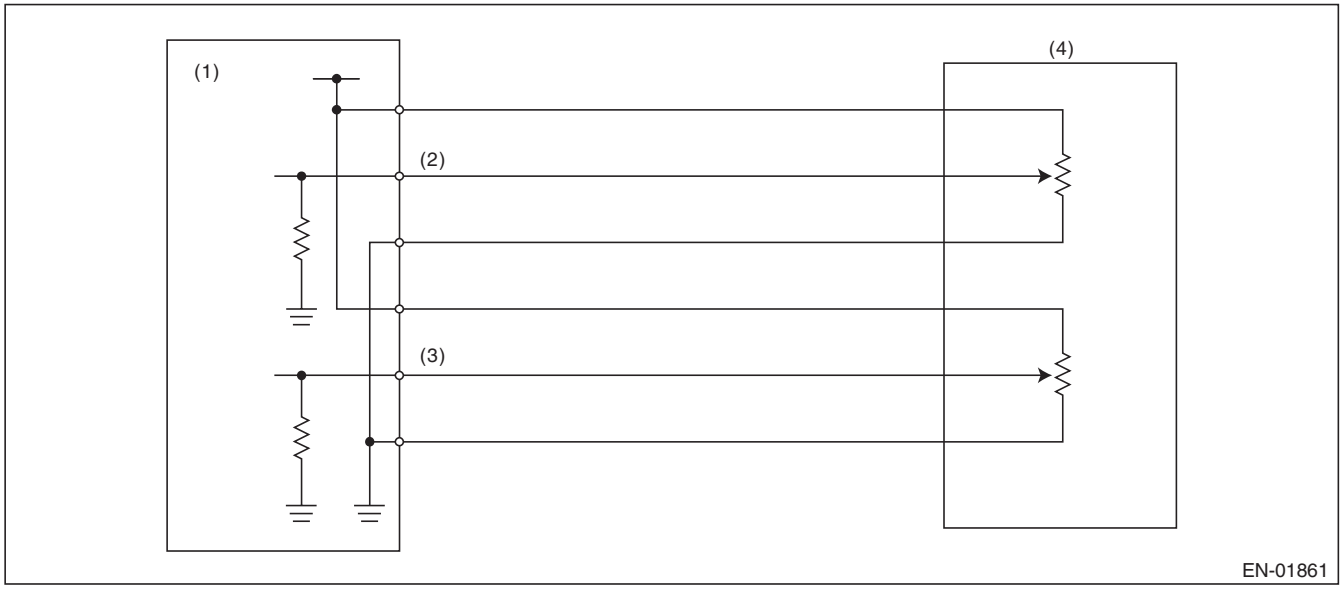

(1) Engine control module (ECM)
(2) Accelerator pedal position sensor 1 signal
(3) Accelerator pedal position sensor 2 signal
(4) Accelerator pedal position sensor

3. ENABLE CONDITION

Secondary Parameters	Enable Conditions
Ignition switch	ON
Battery voltage	≥ 6 V

4. GENERAL DRIVING CYCLE

Always perform the diagnosis continuously.

GETtheMANUALS.org

5. DIAGNOSTIC METHOD

- **Abnormality Judgment**

If the duration of time while the following conditions are met is longer than the time indicated, judge as NG.

Judgment Value

Malfunction criteria	Threshold value
Sensor 2 input voltage	≥ 4.783 V

Time Needed for Diagnosis: 100 ms
Malfunction Indicator Light Illumination: Illuminates as soon as a malfunction occurs.

- **Normality Judgment**

Judge as OK and clear the NG if the continuous time while the following conditions are established is more than the predetermined time.

Judgment Value

Malfunction criteria	Threshold value
Sensor 2 input voltage	< 4.783 V

Time Needed for Diagnosis: 100 ms

GETtheMANUALS.org

FU:DTC P2135 THROTTLE/PEDAL POSITION SENSOR/SWITCH “A”/“B” VOLTAGE CORRELATION

1. OUTLINE OF DIAGNOSIS

Judge as NG when the signal level of throttle position sensor 1 is different from the throttle position sensor 2.

2. COMPONENT DESCRIPTION

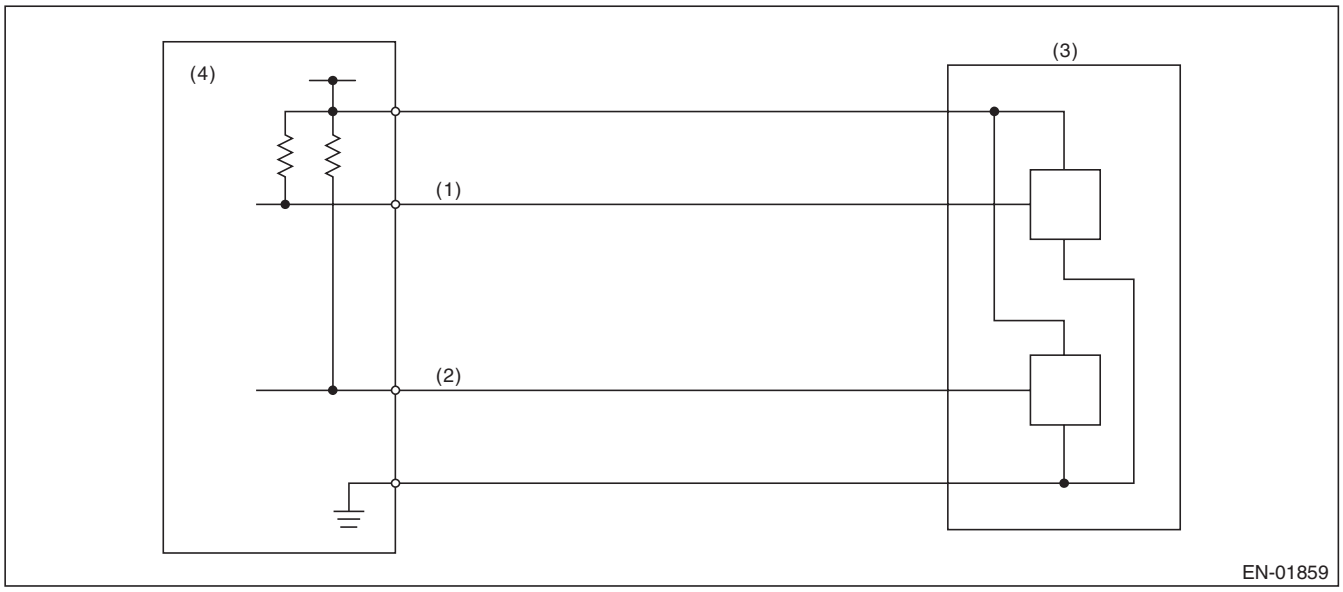

(1) Throttle position sensor 1 signal
(2) Throttle position sensor 2 signal
(3) Throttle position sensor
(4) Engine control module (ECM)

3. ENABLE CONDITION

Secondary Parameters	Enable Conditions
Ignition switch	ON
Battery voltage	≥ 6 V

4. GENERAL DRIVING CYCLE

Always perform the diagnosis continuously.

GETtheMANUALS.org

5. DIAGNOSTIC METHOD

• Abnormality Judgment

If the duration of time while the following conditions are met is longer than the time indicated, judge as NG.

Judgment Value

Malfunction Criteria	Threshold Value
Signal difference between two sensors	Within the NG range of **judgment value detail**

Details of Judgment Value

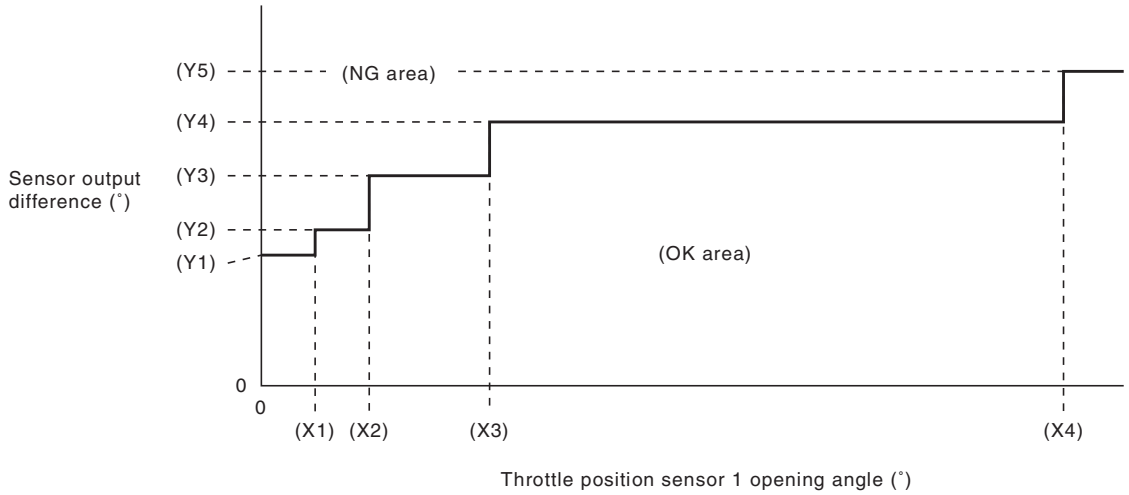

(X1)	2.125 °	(X2)	4.25 °	(X3)	9 °
(X4)	31.625 °				
(Y1)	5.15 °	(Y2)	6.15 °	(Y3)	8.28 °
(Y4)	10.4 °	(Y5)	12.4 °		

Time Needed for Diagnosis: 212 ms
Malfunction Indicator Light Illumination: Illuminates as soon as a malfunction occurs.

• Normality Judgment

Judge as OK and clear the NG if the continuous time while the following conditions are established is more than the predetermined time.

Judgment Value

Malfunction Criteria	Threshold Value
Signal difference between two sensors	Within the OK range of **judgment value detail**

Time Needed for Diagnosis: 24 ms

GETtheMANUALS.org

FV:DTC P2138 THROTTLE/PEDAL POSITION SENSOR/SWITCH “D”/“E” VOLTAGE CORRELATION

1. OUTLINE OF DIAGNOSIS

Judge as NG when the signal level of throttle position sensor 1 is different from the throttle position sensor 2.

2. COMPONENT DESCRIPTION

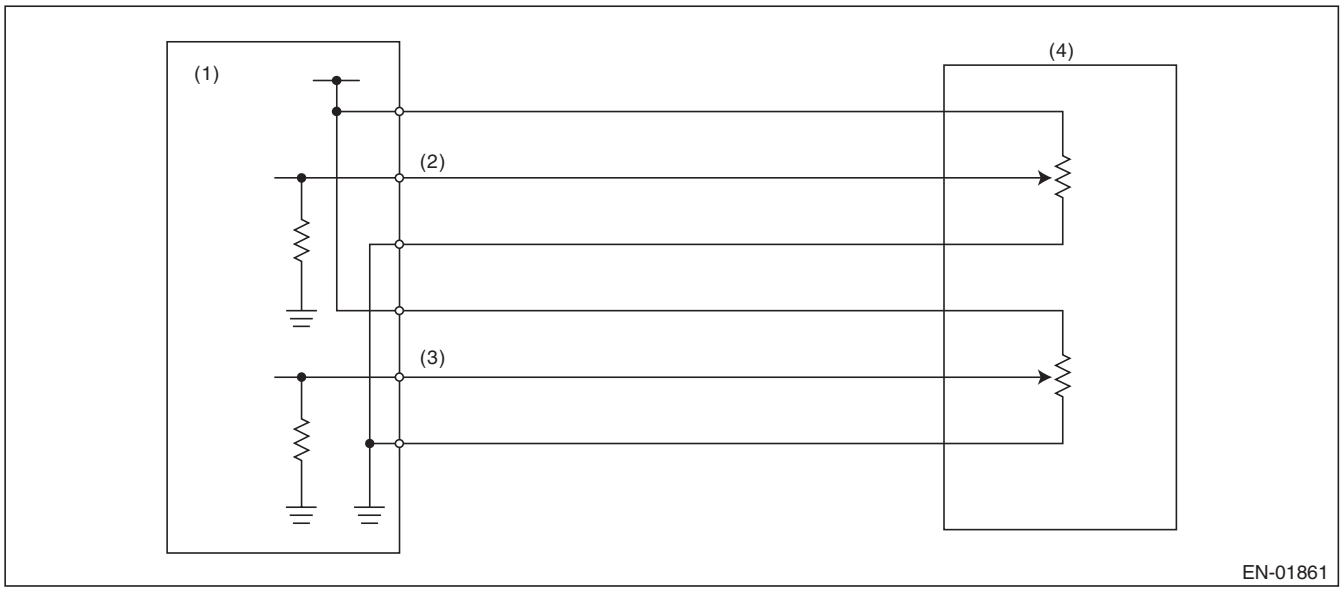

(1) Engine control module (ECM)
(2) Accelerator pedal position sensor 1 signal
(3) Accelerator pedal position sensor 2 signal
(4) Accelerator pedal position sensor

3. ENABLE CONDITION

Secondary Parameters	Enable Conditions
Ignition switch	ON
Battery voltage	≥ 6 V

4. GENERAL DRIVING CYCLE

Always perform the diagnosis continuously.

GETtheMANUALS.org

5. DIAGNOSTIC METHOD

• Abnormality Judgment

If the duration of time while the following conditions are met is longer than the time indicated, judge as NG.

Judgment Value

Malfunction Criteria	Threshold Value
Signal difference between two sensors	Within the NG range of **judgment value detail**

Details of Judgment Value

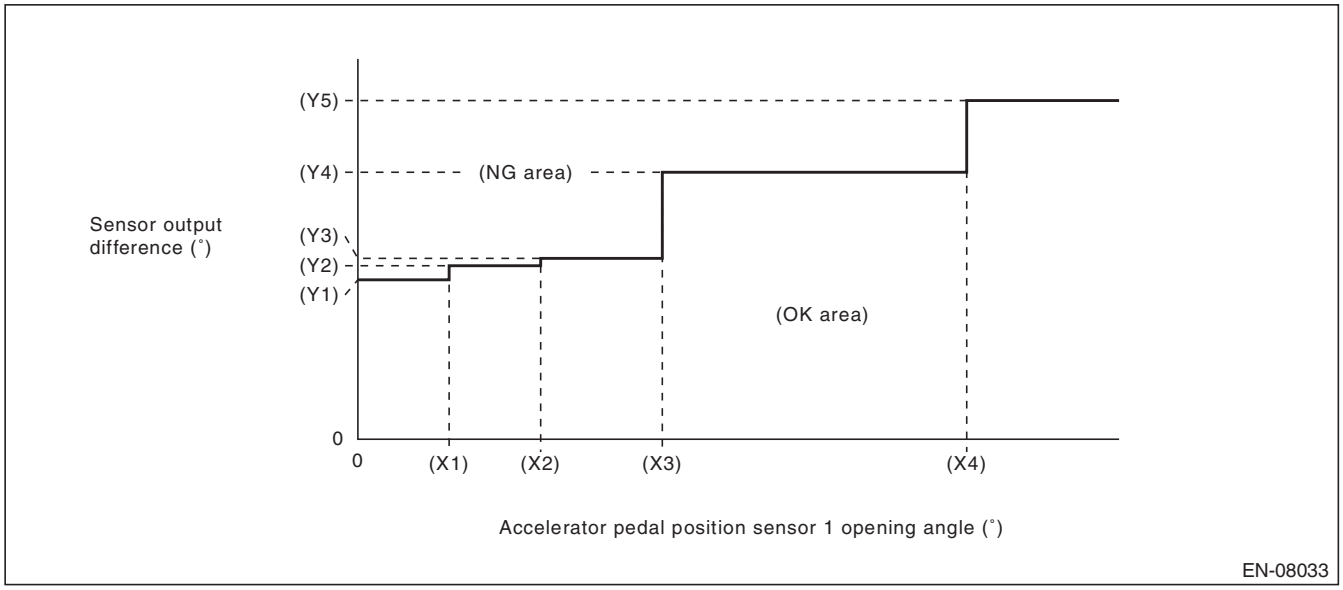

(X1)	0.6 °	(X2)	1.2 °	(X3)	2 °
(X4)	4 °				
(Y1)	1.465 °	(Y2)	1.597 °	(Y3)	1.663 °
(Y4)	2.455 °	(Y5)	3.116 °		

Time Needed for Diagnosis: 116 ms
Malfunction Indicator Light Illumination: Illuminates as soon as a malfunction occurs.

• Normality Judgment

Judge as OK and clear the NG if the continuous time while the following conditions are established is more than the predetermined time.

Judgment Value

Malfunction Criteria	Threshold Value
Signal difference between two sensors	Within the OK range of **judgment value detail**

Time Needed for Diagnosis: 116 ms

GETtheMANUALS.org

FW:DTC P219A BANK 1 AIR-FUEL RATIO IMBALANCE

1. OUTLINE OF DIAGNOSIS

Detect malfunction of air fuel ratio deviation between cylinders from main feedback learning value, sub feedback learning value and engine speed variation.

2. ENABLE CONDITIONS

Secondary Parameters	Enable Conditions
Battery voltage	> 10.9 V
Atmospheric pressure	> 75 kPa (563 mmHg, 22.2 inHg)
A/F main learning system	In operation
Engine speed	> 500 rpm
Engine coolant temperature	> 75 °C (167 °F)
Intake air temperature	< 70 °C (158 °F)
Engine load	> Value of Map 1
Engine load change	< 0.02 g/rev (0 oz/rev)
Evaporative system leak check	Not in operation
Cumulative time of canister purge after engine start	≥ 20.48 s
Learning value of EVAP conc.	< 0.07
Vehicle dynamic control or AT torque control	Not in operation
Intake manifold pressure change at 120°CA	< Value of Map 2
Throttle position change during 16 milliseconds	< 20 °
Fuel shut-off function	Not in operation

Map 1

Engine speed (rpm)	Idling	700	1000	1500	2000	2500	3000	3500	4000	4500	5000
Measured value (g (oz)/rev)	na	0.357 (0.01)	0.25 (0.01)	0.25 (0.01)	0.317 (0.01)	0.326 (0.01)	0.337 (0.01)	0.397 (0.01)	0.439 (0.02)	0.454 (0.02)	0.454 (0.02)

Map 2

rpm	700	1000	1500	2000	2500	3000	3500	4000
kPa (mmHg, inHg)	20 (150, 5.9)	20 (150, 5.9)	20 (150, 5.9)	20 (150, 5.9)	20 (150, 5.9)	20 (150, 5.9)	20 (150, 5.9)	20 (150, 5.9)

rpm	4500	5000	5500	6000	6500	7000
kPa (mmHg, inHg)	20 (150, 5.9)	20 (150, 5.9)	20 (150, 5.9)	20 (150, 5.9)	20 (150, 5.9)	20 (150, 5.9)

3. GENERAL DRIVING CYCLE

Always perform the diagnosis continuously.

GETtheMANUALS.org

4. DIAGNOSTIC METHOD

• Abnormality Judgment

Judge as NG when the following conditions are established.

Judgment Value

Malfunction Criteria	Threshold Value
Rich	
Main feedback learning value	< –0.01
Sub feedback learning value	< –0.03
When any one of the followings is established.	
• any one of the rich side misfire counters for each cylinder when in idling	> 20 time(s)
• total of the rich side misfire counters for each cylinder when in idling	> 255 time(s)
• any one of the rich side misfire counters for each cylinder when not in idling	> 20 time(s)
• total of the rich side misfire counters for each cylinder when not in idling	> 255 time(s)
Lean	
Main feedback learning value	> 0.01
Sub feedback learning value	< –0.012
When any one of the followings is established.	
• any one of the lean side misfire counters for each cylinder when in idling	> 20 time(s)
• total of the lean side misfire counters for each cylinder when in idling	> 255 time(s)
• any one of the lean side misfire counters for each cylinder when not in idling	> 20 time(s)
• total of the lean side misfire counters for each cylinder when not in idling	> 255 time(s)

Time Needed for Diagnosis: 1000 engine revs.
Malfunction Indicator Light Illumination: Illuminates when malfunction occurs in 2 continuous driving cycles.

GETtheMANUALS.org

- **Normality Judgment**

Judge as OK and clear the NG if the following conditions are established.

Judgment Value

Malfunction Criteria	Threshold Value
Rich	
Main feedback learning value	≥ –0.01
or	
Sub feedback learning value	≥ –0.03
or	
All of the following conditions are established.	
• any one of the rich side misfire counters for each cylinder when in idling	≤ 20 time(s)
• total of the rich side misfire counters for each cylinder when in idling	≤ 255 time(s)
• any one of the rich side misfire counters for each cylinder when not in idling	≤ 20 time(s)
• total of the rich side misfire counters for each cylinder when not in idling	≤ 255 time(s)
Lean	
Main feedback learning value	≤ 0.01
or	
Sub feedback learning value	≥ –0.012
or	
All of the following conditions are established.	
• any one of the lean side misfire counters for each cylinder when in idling	≤ 20 time(s)
• total of the lean side misfire counters for each cylinder when in idling	≤ 255 time(s)
• any one of the lean side misfire counters for each cylinder when not in idling	≤ 20 time(s)
• total of the lean side misfire counters for each cylinder when not in idling	≤ 255 time(s)

Time Needed for Diagnosis: 1000 engine revs.

GETtheMANUALS.org

FX:DTC P219B BANK 2 AIR-FUEL RATIO IMBALANCE

1. OUTLINE OF DIAGNOSIS

NOTE:
For the detection standard, refer to DTC P219A. <Ref. to GD(H6DO)-254, DTC P219A BANK 1 AIR-FUEL RATIO IMBALANCE, Diagnostic Trouble Code (DTC) Detecting Criteria.>

GETtheMANUALS.org

FY:DTC P2227 BAROMETRIC PRESSURE CIRCUIT RANGE/PERFORMANCE

1. OUTLINE OF DIAGNOSIS

Detect the malfunction of barometric pressure sensor output property.
Judge as NG when the barometric pressure sensor output is largely different from the intake manifold pressure at engine start.

2. COMPONENT DESCRIPTION

The barometric pressure sensor is built into the ECM.

3. ENABLE CONDITION

Secondary Parameters	Enable Conditions
Engine speed	< 300 rpm
Vehicle speed	< 1 km/h (0.6 MPH)

4. GENERAL DRIVING CYCLE

Perform the diagnosis once at ignition switch ON.

5. DIAGNOSTIC METHOD

- **Abnormality Judgment**

If the duration of time while the following conditions are met is longer than the time indicated, judge as NG.

Judgment Value

Malfunction Criteria	Threshold Value
|Barometric pressure – Intake manifold pressure|	≥ 26.7 kPa (200 mmHg, 7.9 inHg)
|Intake manifold pressure at engine start – Intake manifold pressure|	< 1.3 kPa (9.99 mmHg, 0.4 inHg)

Time Needed for Diagnosis: 328 ms
Malfunction Indicator Light Illumination: Illuminates when malfunction occurs in 2 continuous driving cycles.

- **Normality Judgment**

Judge as OK and clear the NG if the continuous time while the following conditions are established is more than the predetermined time.

Judgment Value

Malfunction Criteria	Threshold Value
|Barometric pressure – Intake manifold pressure|	< 26.7 kPa (200 mmHg, 7.9 inHg)

Time Needed for Diagnosis: 262 ms

GETtheMANUALS.org

FZ: DTC P2228 BAROMETRIC PRESSURE CIRCUIT LOW

1. OUTLINE OF DIAGNOSIS

Detect the open/short circuit of the barometric pressure sensor.
Judge as NG if out of specification.

2. COMPONENT DESCRIPTION

The barometric pressure sensor is built into the ECM.

3. ENABLE CONDITION

Secondary Parameters	Enable Conditions
None	

4. GENERAL DRIVING CYCLE

Always perform the diagnosis continuously.

5. DIAGNOSTIC METHOD

- **Abnormality Judgment**

If the duration of time while the following conditions are met is longer than the time indicated, judge as NG.

Judgment Value

Malfunction Criteria	Threshold Value
Output voltage	< 2.146 V

Time Needed for Diagnosis: 500 ms
Malfunction Indicator Light Illumination: Illuminates as soon as a malfunction occurs.

- **Normality Judgment**

Judge as OK and clear the NG if the continuous time while the following conditions are established is more than the predetermined time.

Judgment Value

Malfunction Criteria	Threshold Value
Output voltage	≥ 2.146 V

Time Needed for Diagnosis: Less than 1 second

GETtheMANUALS.org

GA:DTC P2229 BAROMETRIC PRESSURE CIRCUIT HIGH

1. OUTLINE OF DIAGNOSIS

Detect the open/short circuit of the barometric pressure sensor.
Judge as NG if out of specification.

2. COMPONENT DESCRIPTION

The barometric pressure sensor is built into the ECM.

3. ENABLE CONDITION

Secondary Parameters	Enable Conditions
None	

4. GENERAL DRIVING CYCLE

Always perform the diagnosis continuously.

5. DIAGNOSTIC METHOD

- **Abnormality Judgment**

If the duration of time while the following conditions are met is longer than the time indicated, judge as NG.

Judgment Value

Malfunction Criteria	Threshold Value
Output voltage	≥ 3.875 V

Time Needed for Diagnosis: 500 ms
Malfunction Indicator Light Illumination: Illuminates as soon as a malfunction occurs.

- **Normality Judgment**

Judge as OK and clear the NG if the continuous time while the following conditions are established is more than the predetermined time.

Judgment Value

Malfunction Criteria	Threshold Value
Output voltage	< 3.875 V

Time Needed for Diagnosis: Less than 1 second

GETtheMANUALS.org

GB:DTC P2610 ECM/PCM INTERNAL ENGINE OFF TIMER PERFORMANCE

1. OUTLINE OF DIAGNOSIS

Detect malfunction of soaking timer IC by the five diagnoses below.

Monitor Number	Explanation	Time required for diagnosis
Monitor #1 <Timer diagnosis>	Perform diagnosis of the soaking timer IC accuracy	196 ms
Monitor #2 <Full count diagnosis>	Perform diagnosis of the soaking timer IC counter function	4000 ms
Monitor #3 <Soaking timer IC setting diagnosis>	Perform diagnosis of communication between ECM and soaking timer IC	196 ms
Monitor #4 <Timer diagnosis (during soaking)>	Perform diagnosis of the soaking timer IC accuracy during soaking	3000 ms
Monitor #5 <Wake-up diagnosis>	Perform diagnosis of wake-up function	64 ms

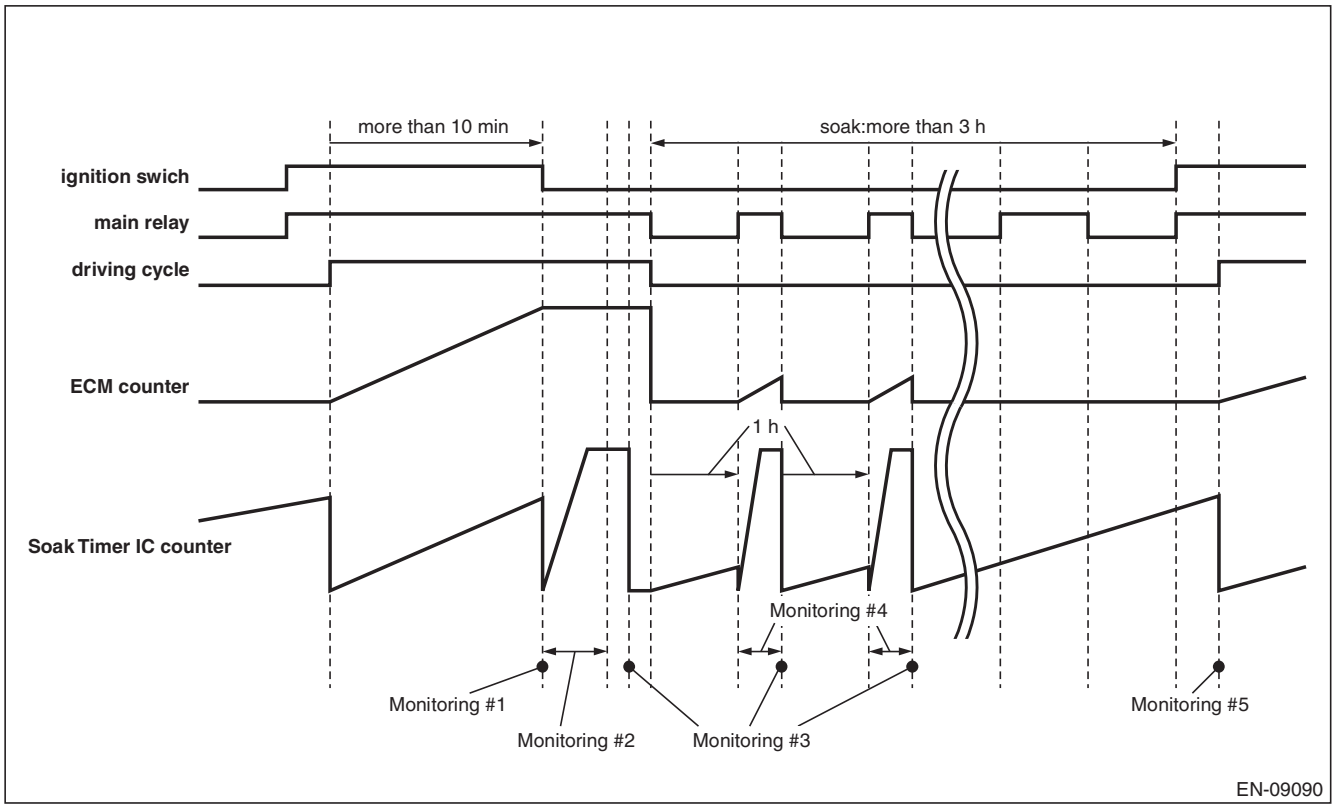

2. COMPONENT DESCRIPTION

The soaking timer IC is built into the ECM.

GETtheMANUALS.org

3. ENABLE CONDITIONS

Secondary Parameters	Enable Conditions
<Timer diagnosis>	
Battery voltage Ignition switch Elapsed time after starting the engine	≥ 10.9 V OFF > 600 s
< Full count diagnosis & soaking timer IC setting diagnosis>	
Battery voltage Ignition switch	≥ 10.9 V OFF
<Timer diagnosis (during soaking)>	
Battery voltage Ignition switch Number of wake-up	≥ 10.9 V OFF < 2 time(s)
<Wake-up diagnosis>	
Ignition switch Wake-up activation time setting Time in the soaking timer IC	ON Completed > 3600 s × 2 time(s)

4. GENERAL DRIVING CYCLE

Perform the diagnosis only once when 10 minutes have passed after the engine start and the ignition switch is OFF, and also when the ignition switch is ON after the soaking of five hours or more.

5. DIAGNOSTIC METHOD

<Timer diagnosis>

Start the count up operation of counters in ECM and in soaking timer IC when the engine is started.
Judge as timer malfunction if the difference between the counter in ECM and counter in soaking timer IC exceeds the allowable limit when the ignition switch is OFF.

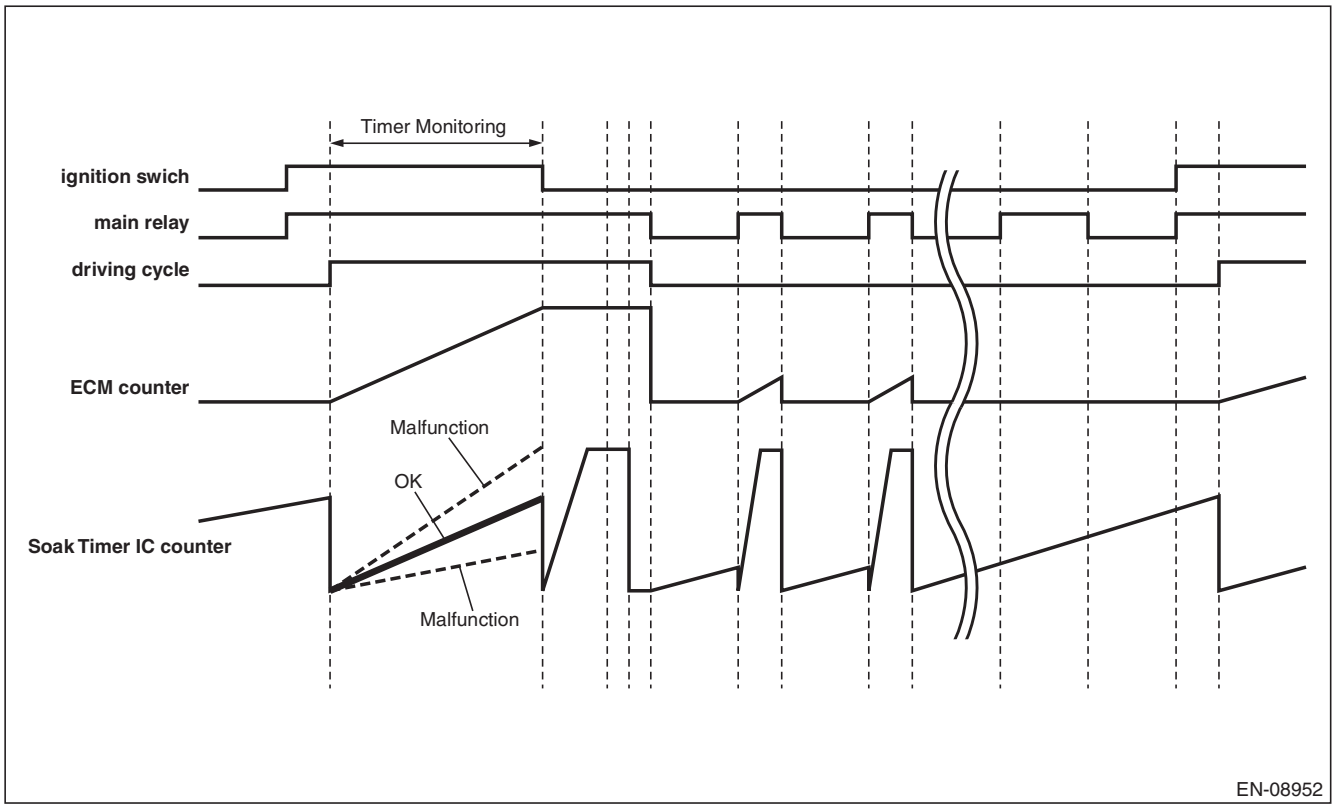

GETtheMANUALS.org

- **Abnormality Judgment**

Judge as NG when the following conditions are established.

Judgment Value

Malfunction Criteria	Threshold Value
|osoaktimcpu – osoaktimic| / osoaktimcpu osoaktimcpu = Counter in ECM osoaktimic = Counter in soaking timer IC	> 0.24

- **Normality Judgment**

Judge as OK when the following conditions are established.

Judgment Value

Malfunction Criteria	Threshold Value
|osoaktimcpu – osoaktimic| / osoaktimcpu	≤ 0.24

<Full count diagnosis>

After the timer diagnosis is completed, reset the counter in soaking timer IC and start the count up operation. Judge as full count diagnosis malfunction if counter in soaking timer IC is not $3FF (1023 count) after 4 seconds.

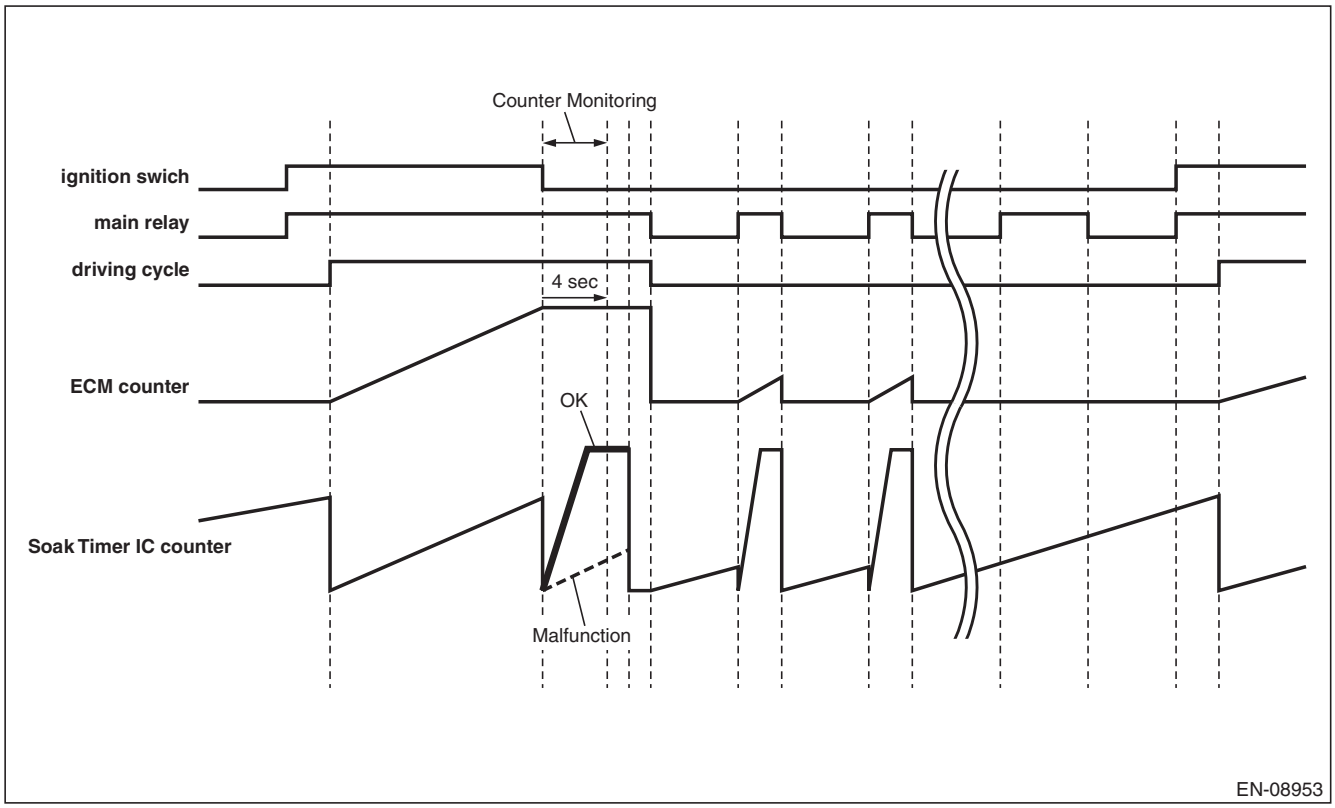

- **Abnormality Judgment**

Judge as NG when the following conditions are established.

Judgment Value

Malfunction Criteria	Threshold Value
osoakfcntic osoakfcntic = Counter in soaking timer IC	≠ $3FF (1023 count)

GETtheMANUALS.org

- **Normality Judgment**

Judge as OK when the following conditions are established.

Judgment Value

Malfunction Criteria	Threshold Value
osoakfcntic	= $3FF (1023 count)

<Soaking timer IC setting diagnosis>

When setting the activation setting time to soaking timer IC, compare the writing value to soaking timer IC with read out value. Judge as malfunction if the values do not match 3 times in a row.

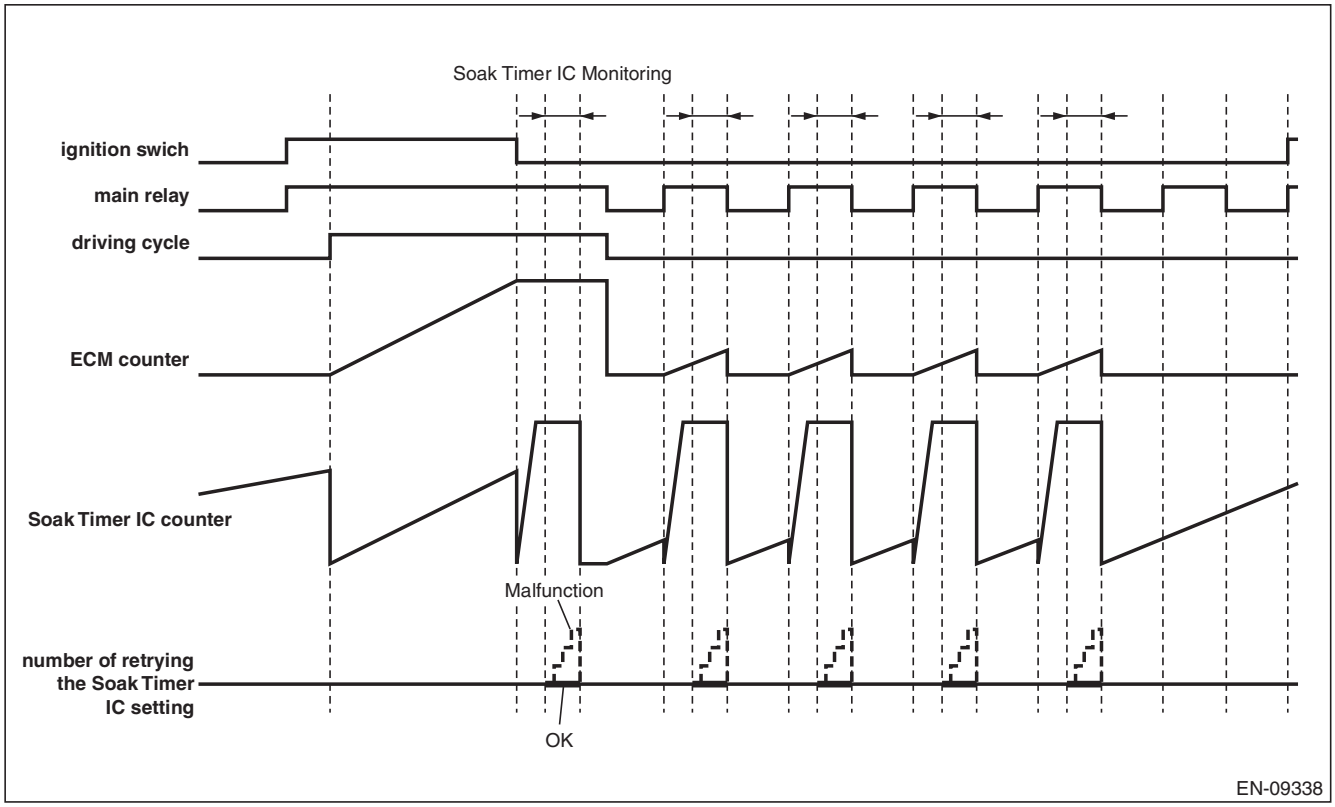

- **Abnormality Judgment**

Judge as NG when the following conditions are established.

Judgment Value

Malfunction Criteria	Threshold Value
Writing value and read out value when setting the soaking timer	Unmatch
Number of retrying the soaking timer setting	≥ 3 times

- **Normality Judgment**

Judge as OK when the following conditions are established.

Judgment Value

Malfunction Criteria	Threshold Value
Writing value and read out value when setting the soaking timer	Match

GETtheMANUALS.org

<Timer diagnosis (during soaking)>

Wake-up at the predetermined interval until five hours have passed after the ignition switch is OFF, and compare the counter in soaking timer IC with the counter in ECM.
Judge as malfunction if the counter in soaking timer IC is counted up to maximum value (1023 count) when the counter in ECM is 1637 ms, or if the counter in soaking timer IC is not counted up to maximum value (1023 count) when the counter in ECM is 2455 ms.

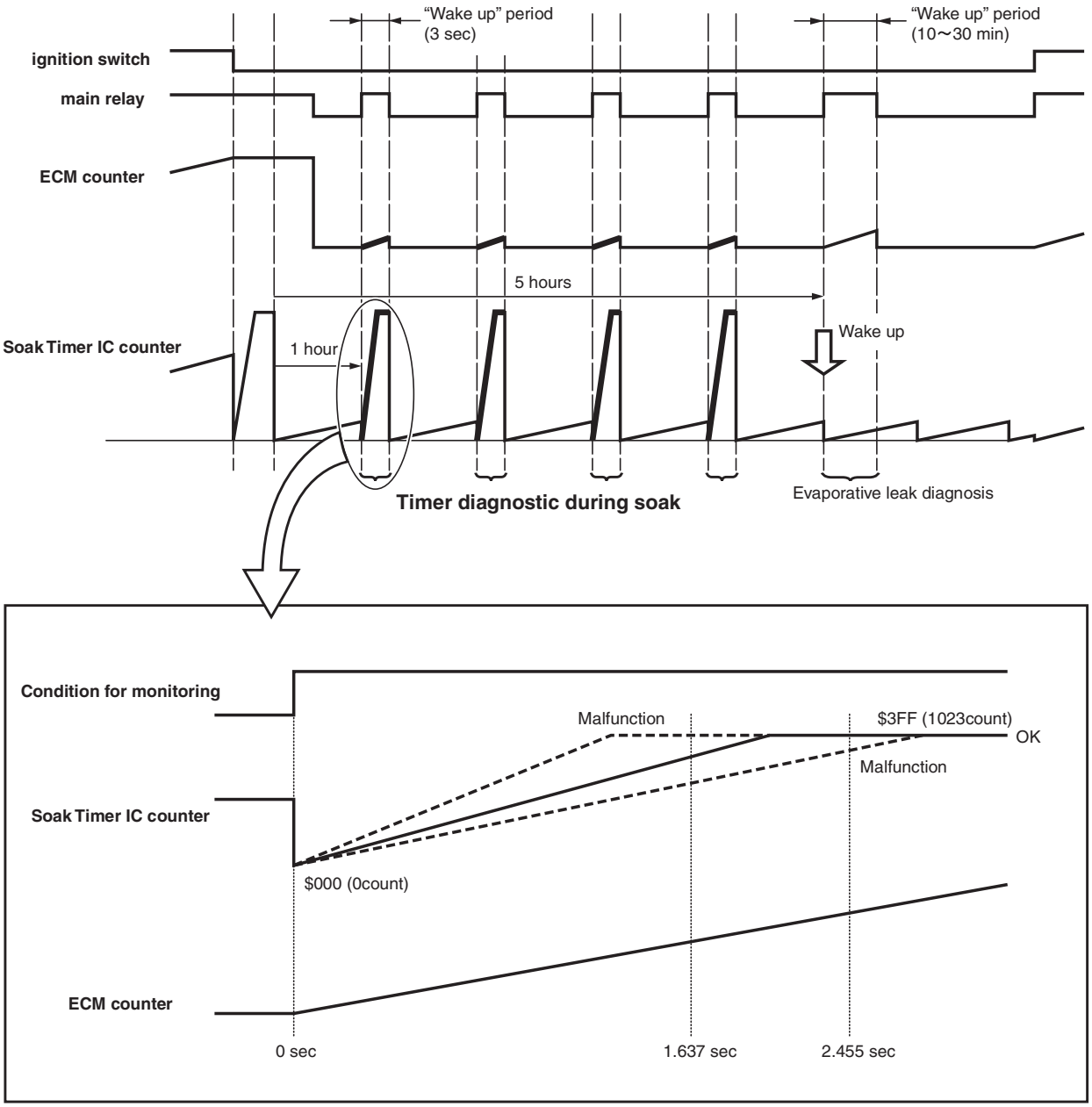

EN-08981

GETtheMANUALS.org

- **Abnormality Judgment**

Judge as NG when the following conditions are established.

Judgment Value

Malfunction Criteria	Threshold Value
When any one of the followings is established.	
• All of the following conditions are established. Counter in ECM Counter in soaking timer IC	 ≤ 1637 ms = $ $3FF (1023 count)
• All of the following conditions are established. Counter in ECM Counter in soaking timer IC	 ≥ 2455 ms ≠ $ $3FF (1023 count)

- **Normality Judgment**

Judge as OK when the following conditions are established.

Judgment Value

Malfunction Criteria	Threshold Value
Following conditions are established.	
• All of the following conditions are established. Counter in ECM Counter in soaking timer IC	 ≤ 1637 ms ≠ $ $3FF (1023 count)
• All of the following conditions are established. Counter in ECM Counter in soaking timer IC	 ≥ 2455 ms = $ $3FF (1023 count)

GETtheMANUALS.org

<Wake-up diagnosis>

Store the number of wake-up activation when the ECM wakes up by the soaking timer IC.
Next time when the ignition switch is ON, if the number of wake-up activation does not reach the predetermined value even though the counter in soaking timer IC exceeds the activation setting time, judge as wake-up malfunction.

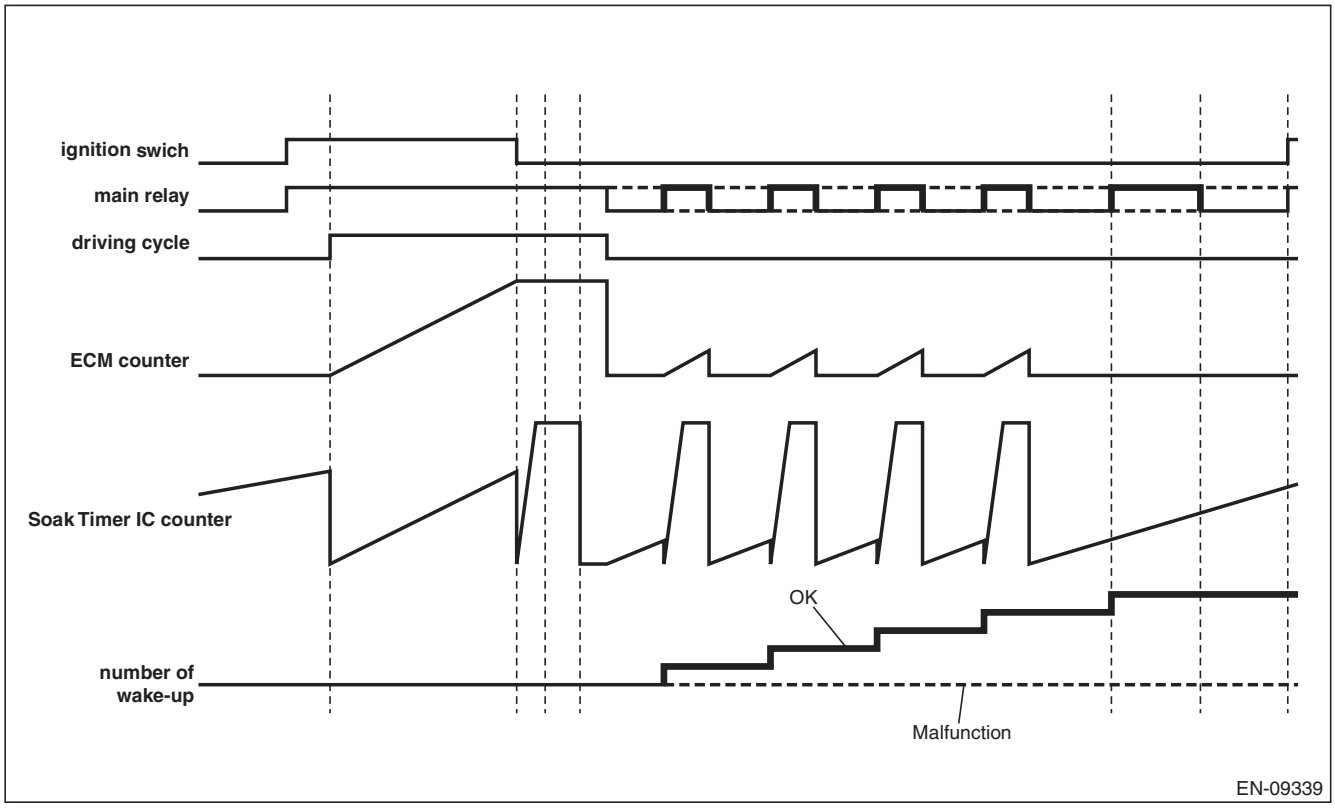

- **Abnormality Judgment**

Judge as NG when the following conditions are established.

Judgment Value

Malfunction Criteria	Threshold Value
Number of wake-up	< 2 time(s)

- **Normality Judgment**

Judge as OK when the following conditions are established.

Judgment Value

Malfunction Criteria	Threshold Value
Number of wake-up	≥ 2 time(s)

GETtheMANUALS.org

- **Abnormality Judgment**

Judge as NG when the following conditions are established.

Judgment Value

Malfunction Criteria	Threshold Value
Ignition switch	ON
Driving cycle	Completed
When any one of the followings is established.	
• Timer diagnosis	NG
• Full count diagnosis	NG
• Soaking timer IC setting diagnosis	NG
• Timer diagnosis (during soaking)	NG
• Wake-up diagnosis	NG

Time Needed for Diagnosis: 18620 s (Approx. 5 hours)
Malfunction Indicator Light Illumination: Illuminates when malfunction occurs in 2 continuous driving cycles.

- **Normality Judgment**

Judge as OK and clear the NG if the following conditions are established.

Judgment Value

Malfunction Criteria	Threshold Value
Ignition switch	ON
Driving cycle	Completed
All of the following conditions are established.	
• Timer diagnosis	OK
• Full count diagnosis	OK
• Soaking timer IC setting diagnosis	OK
• Timer diagnosis (during soaking)	OK
• Wake-up diagnosis	OK

Time Needed for Diagnosis: 18620 s (Approx. 5 hours)

GETtheMANUALS.org

GC:DTC U0073 CAN FAILURE, BUS ‘OFF’ DETECTION

1. OUTLINE OF DIAGNOSIS

Detect malfunction of CAN communication.
Judge as NG when CAN communication failure has occurred.

2. COMPONENT DESCRIPTION

(Common Specifications)
CAN Protocol 2.0 B (Active)
Frame Format: 11 Bit ID Frame (Standard Frame)
Conforms to ISO11898
Communication Speed: 500 kbps

3. ENABLE CONDITIONS

Secondary Parameters	Enable Conditions
None	

4. GENERAL DRIVING CYCLE

Perform the diagnosis continuously after starting the engine.

5. DIAGNOSTIC METHOD

- **Abnormality Judgment**

Judge as NG when the following conditions are established.

Judgment Value

Malfunction Criteria	Threshold Value
Battery voltage	> 10.9 V
Starter switch	OFF
Engine	run
bus off flag or error warning flag	set (error)

Time Needed for Diagnosis: 436 ms
Malfunction Indicator Light Illumination: Illuminates as soon as a malfunction occurs.

- **Normality Judgment**

Judge as OK and clear the NG if the continuous time while the following conditions are established is more than the predetermined time.

Judgment Value

Malfunction Criteria	Threshold Value
Engine	run
bus off flag or error warning flag	clear (No error)

Time Needed for Diagnosis: 1000 ms

GETtheMANUALS.org

GD:DTC U0101 CAN (TCU) DATA NOT LOADED

1. OUTLINE OF DIAGNOSIS

Detect malfunction of CAN communication.
Judge as NG when CAN communication failure has occurred between TCM, VDC CM and body integrated unit.

2. COMPONENT DESCRIPTION

(Common Specifications)
CAN Protocol 2.0 B (Active)
Frame Format: 11 Bit ID Frame (Standard Frame)
Conforms to ISO11898
Communication Speed: 500 kbps

3. ENABLE CONDITIONS

Secondary Parameters	Enable Conditions
None	

4. GENERAL DRIVING CYCLE

Perform the diagnosis continuously after starting the engine.

5. DIAGNOSTIC METHOD

- **Abnormality Judgment**

Judge as NG when the following conditions are established.

Judgment Value

Malfunction Criteria	Threshold Value
Battery voltage	> 10.9 V
Starter switch	OFF
Engine	run
ID received from control module connected to CAN	None during 500 milliseconds

Time Needed for Diagnosis: 500 ms
Malfunction Indicator Light Illumination: Illuminates as soon as a malfunction occurs.

- **Normality Judgment**

Judge as OK and clear the NG if the continuous time while the following conditions are established is more than the predetermined time.

Judgment Value

Malfunction Criteria	Threshold Value
Engine	run
ID received from control module connected to CAN	Yes

Time Needed for Diagnosis: 1000 ms

GETtheMANUALS.org

GE:DTC U0122 CAN (VDC) DATA NOT LOADED

1. OUTLINE OF DIAGNOSIS

NOTE:
For the detection standard, refer to DTC U0101. <Ref. to GD(H6DO)-270, DTC U0101 CAN (TCU) DATA NOT LOADED, Diagnostic Trouble Code (DTC) Detecting Criteria.>

GF:DTC U0140 CAN (BCU) DATA NOT LOADED

1. OUTLINE OF DIAGNOSIS

NOTE:
For the detection standard, refer to DTC U0101. <Ref. to GD(H6DO)-270, DTC U0101 CAN (TCU) DATA NOT LOADED, Diagnostic Trouble Code (DTC) Detecting Criteria.>

GETtheMANUALS.org

GG:DTC U0402 CAN (TCU) DATA ABNORMAL

1. OUTLINE OF DIAGNOSIS

Detect malfunction of CAN communication.
Judge as NG when data received from TCM, VDC CM and body integrated unit is not normal.

2. COMPONENT DESCRIPTION

(Common Specifications)
CAN Protocol 2.0 B (Active)
Frame Format: 11 Bit ID Frame (Standard Frame)
Conforms to ISO11898
Communication Speed: 500 kbps

3. ENABLE CONDITIONS

Secondary Parameters	Enable Conditions
None	

4. GENERAL DRIVING CYCLE

Perform the diagnosis continuously after starting the engine.

5. DIAGNOSTIC METHOD

- **Abnormality Judgment**

Judge as NG when the following conditions are established.

Judgment Value

Malfunction Criteria	Threshold Value
Battery voltage	> 10.9 V
Starter switch	OFF
Engine	run
Data updated from control module connected to CAN	None during 2000 milliseconds

Time Needed for Diagnosis: 2 seconds
Malfunction Indicator Light Illumination: Illuminates as soon as a malfunction occurs.

- **Normality Judgment**

Judge as OK and clear the NG if the continuous time while the following conditions are established is more than the predetermined time.

Judgment Value

Malfunction Criteria	Threshold Value
Engine	run
Data updated from control module connected to CAN	Yes

Time Needed for Diagnosis: 1000 ms

GETtheMANUALS.org

GH:DTC U0416 CAN (VDC) DATA ABNORMAL

1. OUTLINE OF DIAGNOSIS

NOTE:
For the detection standard, refer to DTC U0402. <Ref. to GD(H6DO)-272, DTC U0402 CAN (TCU) DATA ABNORMAL, Diagnostic Trouble Code (DTC) Detecting Criteria.>

GI: DTC U0422 CAN (BCU) DATA ABNORMAL

1. OUTLINE OF DIAGNOSIS

NOTE:
For the detection standard, refer to DTC U0402. <Ref. to GD(H6DO)-272, DTC U0402 CAN (TCU) DATA ABNORMAL, Diagnostic Trouble Code (DTC) Detecting Criteria.>

GETtheMANUALS.org

GETtheMANUALS.org