Table of Contents

2007 NG6 Engines Workbook

Subject Page

New NG6 Engines for 2007 5
New Engine Designations 6
Crankcase Identification 7
New NG6 Versions 8
New Vehicles for 2007 8

Engine Mechanical Overview 9
Crankcase 9
Bolts 10
Cylinder Head Cover 10
Cylinder Head 11
Valvetrain 11
Camshafts 11
VANOS 12
Valvetronic 12
Gaskets and Seals 13
Head Gasket 13
Oil Pan Gasket 13
Bedplate Sealing 13
Crankshaft Drive Components 13
Crankshaft 13
Piston and Connecting Rods 13
Torsional Vibration Damper 13

cardiagn.com

Initial Print Date: 10/06 Revision Date: 12/06

Table of Contents

Subject Page

Intake Manifold 14
Crankcase Ventilation 20
Crankcase Ventilation (N51 and N52KP) 20
Crankcase Ventilation (N54) 21
Crankcase Ventilation System Overview (N54) 22
Crankcase Ventilation System Overview (N54) 23
Summary of Mechanical Changes 26

MSD80 Engine Management Overview (E9X) 28

MSV80 Engine Management Overview (E70) 30

Air Management 32
Air Management N52KP and N51 32
Throttle Valve 32
Air Intake Ducting 33
Air Intake Ducting Function 34
Exhaust Gas Turbocharging 36
Bi-turbocharging 37
Boost-pressure Control 38
Blow-off Control 39
Charge-air Cooling 40
Load Control 40
Controlled Variables 41
Limp-home Mode 41
Turbocharger Diagnosis 42
Hot-Film Air Mass Meter 44

cardiagn.com

Table of Contents

Subject Page

Fuel Supply and Management 46
N52KP and N51 Fuel System 46
HPI Function 47
High Pressure Pump Function and Design 48
Pressure Generation in High-pressure Pump 49
Limp-home Mode 50
Fuel System Safety 50
Piezo Fuel Injectors 51
Injector Design and Function 51
Injection Strategy 53
Piezo Element 54
Injector Adjustment 54
Injector Control and Adaptation 55
Injector Adaptation 55
Optimization 55

Ignition Management 60
Spark Plugs 60
Spark Plug Diagnosis (N54) 60

Emissions Management 61
Cooling System 62

Performance Controls 62
Engine-oil Cooling 63
Radiator 64
Electric Coolant Pump 64

cardiagn.com

2007 NG6 Engines Workbook

Model: All with NG6-cylinder from 2007

Production: from 9/2006

OBJECTIVES

After completion of this module you will be able to:

- Identify the new members of the NG6 engine family
- Understand the new engine designations
- Understand the mechanical differences between the NG6 versions
- Understand the bi-turbocharging system on the N54 engine
- Understand the new High Precision Injection system.

cardiagn.com

New NG6 Engines for 2007

Previously in 2005, BMW introduced the beginning of a new generation of six cylinder engines with the N52. Now, for the 2007 model year, BMW has 3 new variations of the NG6 engine family.

The first of the new engines is the N54, which will debut in the new 3-series coupe in September 2006. The N54 engine is turbocharged and uses the second generation of direct injection (DI 2). This engine will power the new 335i coupe in the fall of 2006.

N54 Engine

The N52 will eventually be replaced by the new N52KP. The N52 KP engine is an improved and cost optimized version of the N52. The N52 KP will be available in the 328i and xi coupe from September and will replace the N52 in various models.

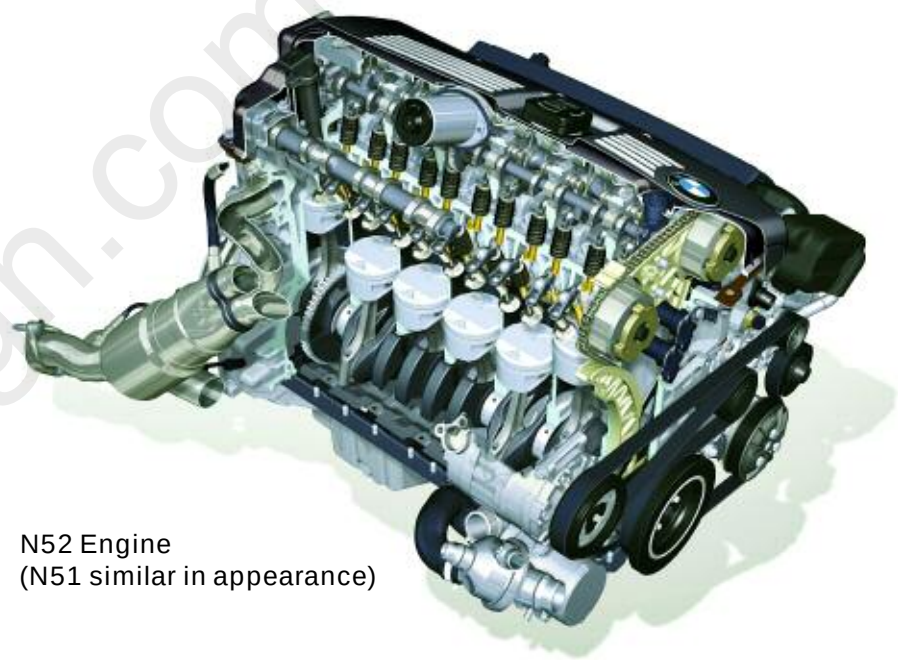

N52 Engine
(N51 similar in appearance)

Finally, the N51 which is a SULEV II compatible engine, will be phased into selected production models from 9/06. The N51 features many of the same features of the previous SULEV engine (M56) including a “Zero Evap” system.

New Engine Designations

Along with the new engines for 2007, there is a new system for engine designations. The first few digits such as “N54B30” are familiar from the past, however the suffix has been changed. The former “TU” designation has been dropped in favor of two additional digits.

The breakdown is as follows:

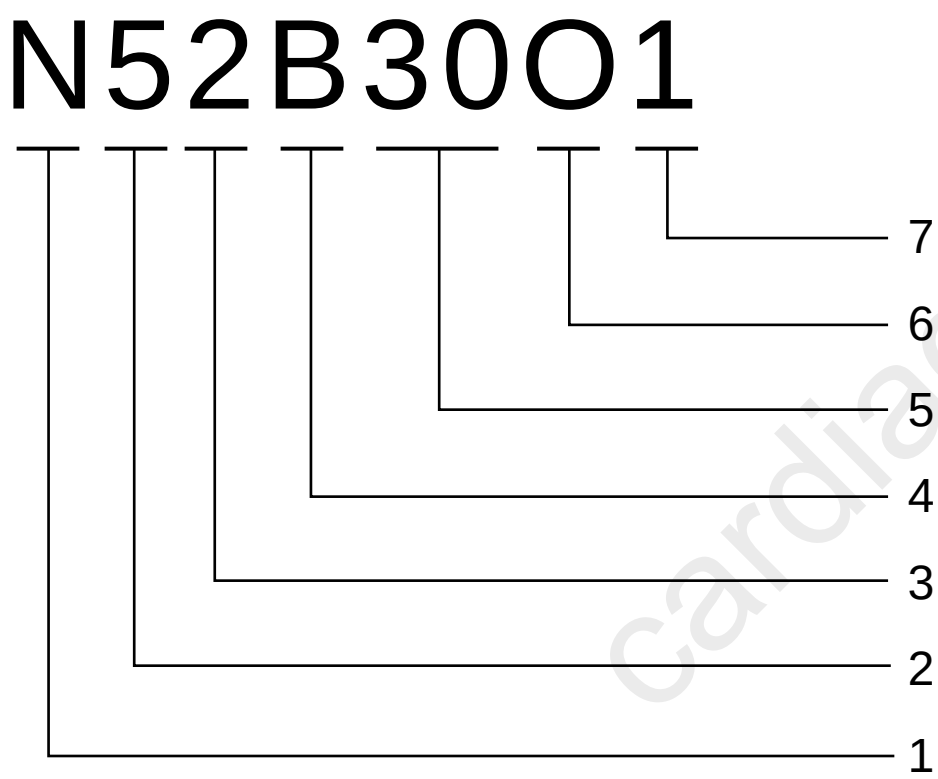

Index	Designation	Code	Description
1	Engine Generation	M	BMW Engines up to 2001
		N	BMW Engines from 2001 (New Generation)
		S	BMW M GmbH
		W	External Engines (i.e. Tritec MINI)
2	Engine Type	4	4-cylinder in-line engine
		5	6-cylinder in-line engine
		6	8-cylinder “V” engine
		7	12-cylinder “V” engine
		8	10-cylinder “V” engine
3	Engine System	0	Basic engine
		1	SULEV or PZEV
		2	Valvetronic
		3	Gasoline direct injection
		4	Gasoline direct injection with turbocharger
		5	Double VANOS with Valvetronic
		7	Diesel direct injection with turbocharger
4	Fuel type/ operating mode	B	Gasoline
		D	Diesel
		E	Electric
		G	Gas (natural)
		H	Hydrogen
5	Displacement in 1/10 liter	30	3.0 liter (example)
6	Power output class	T	Top
		O	Upper output class (standard)
		M	Medium output class
		U	Lower output class
		K	Lowest output class
		0	New development
7	Version	1-9	Redesign/facelift version (TU etc.)

cardiagn.com

Crankcase Identification

The engine identification numbers are stamped on the block near the high pressure pump.

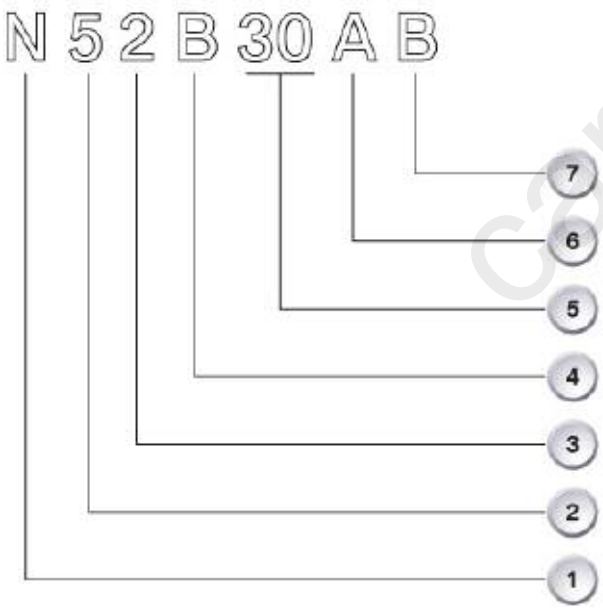

Index	Designation	Code	Description
1	Engine Generation	M	BMW Engines up to 2001
		N	BMW Engines from 2001 (New Generation)
		S	BMW M GmbH
		W	External Engines (i.e. Tritec MINI)
2	Engine Type	4	4-cylinder in-line engine
		5	6-cylinder in-line engine
		6	8-cylinder “V” engine
		7	12-cylinder “V” engine
		8	10-cylinder “V” engine
3	Engine System	0	Basic engine
		1	SULEV or PZEV
		2	Valvetronic
		3	Gasoline direct injection
		4	Gasoline direct injection with turbocharger
		5	Double VANOS with Valvetronic
		7	Diesel direct injection with turbocharger
4	Fuel type/ operating mode	B	Gasoline
		D	Diesel
		E	Electric
		G	Gas (natural)
		H	Hydrogen
5	Displacement in 1/10 liter	30	3.0 liter (example)
6	Fuel Grade		
7	Performance Class		

cardiagn.com

New NG6 Versions

The new N54 engine is designated the “N54B30O0”. The “O” in the engine designation indicates the “upper” output range.
The last digit, which is a “0”, indicates the first version in this range of engines (N54). If the N54 engine is updated, then the last digit will change to a “1” rather than the former “TU” suffix.

The N52KP, which replaces the N52, will have three possible variants as shown below:

N52B30O1

N52B30M1

N52B30U1

All of the N52KP engines have a last digit of “1”, which indicates that “KP” engines are an updated version of the N52. There are three variants, the upper output (O), the medium output (M) and the lower output (U). Each engine has specific characteristics and power output. The “O” engine has 260 horsepower, while the “M” version has about 230 horsepower. The “U” engine is a possible future variant with 215 horsepower.

The N51 engine uses the designation - “N51B30M0”. This engine is SULEV II compliant with 230 horsepower.

New Vehicles for 2007

The new engine variants will be initially installed into some new and updated vehicles for 2007. The new E92 coupe will be available with the N54B30O0 (335i) and the N52B30M1 (328i).

The N52B30O1 will be initially available in the E83 LCI (X3 3.0si) from 9/2006 and the new E70 (X5 3.0si) from SOP.

cardiagn.com

Crankcase

As far as the physical appearance and dimensions, the crankcase on the N54 is the same as the N52. The main change is in the materials, the N54 uses an all aluminum alloy crankcase. There is also cast iron cylinder liners similar to the previous M54 engine.

The reason for using the all aluminum configuration is to be more compatible with the increased torque output and cylinder pressure in the N54.

N54 crankcase - all aluminum alloy

The N54 engine continues to use the “two-piece” crankcase featuring the “bedplate” design.

The N52KP and N51 engines continue to use the composite magnesium/aluminum alloy engine from the existing N52.

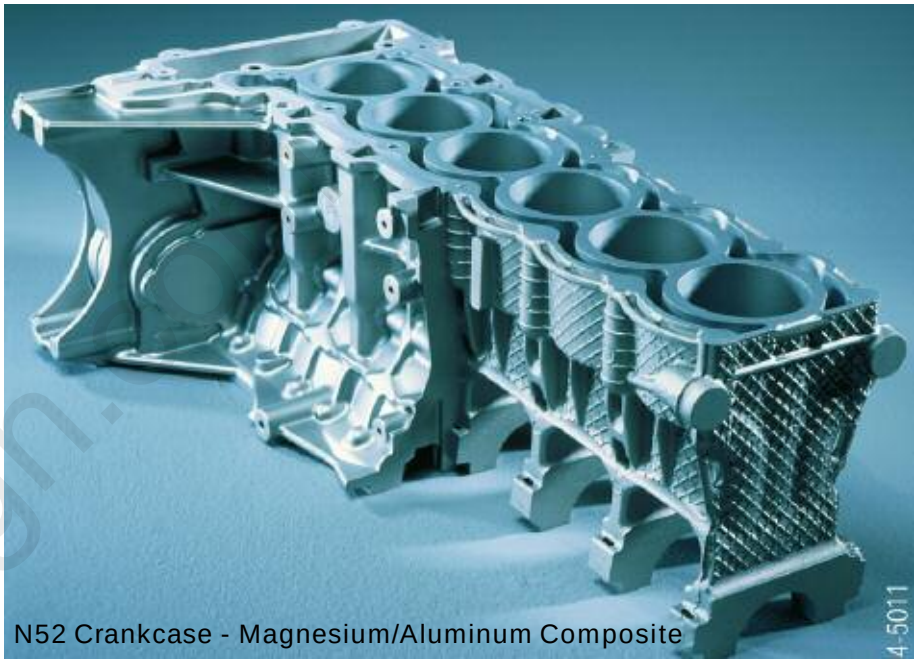

N52 Crankcase - Magnesium/Aluminum Composite

Note: The N54 engine has a different bolt pattern on the transmission mounting (bellhousing) area. Therefore, a new special tool is needed to mount the engine to an engine stand. The new tool has slots which will accommodate all NG6 engines

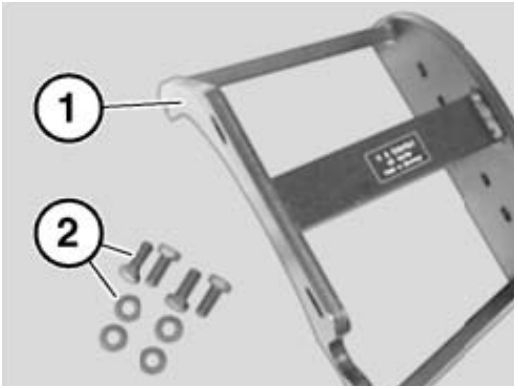

cardiagn.com

Bolts

Although, the N54 engine has an all aluminum crankcase, many of the bolts are still aluminum as on the N52. This is to reduce any potential confusion between steel and aluminum bolts. Some bolts, for example, are steel such as the cylinder head cover bolts. This is possible, due to the plastic cylinder head cover.

The N52KP and N51 engines use the same aluminum bolt configuration as the N52 engine, with little change. The cylinder head cover bolts are like the N54 - steel, due to the plastic cylinder head cover.

The same rules apply to the handling of aluminum bolts as in the past.

Strict adherence to repair instructions is required to ensure proper connections.

Be sure to follow the proper torque/tightening angle sequence as outlined in the “tightening torques” section of TIS.

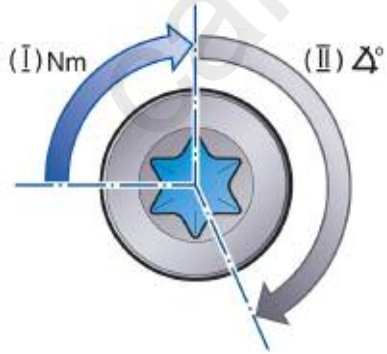

Cylinder Head Cover

As stated before, the cylinder head cover used on all of the new NG6 engines is made from plastic. However, the design differs between the engines due to engine equipment.

For example, the N54 engine does not use Valvetronic and therefore does not need the accommodation for the VVT motor. Also, the crankcase ventilation system is different on the N54. Some of the crankcase venting components are integrated into the cylinder head cover such as the cyclone separator.

The N52KP and N51 engines have the same cylinder head cover. The cover also includes some of the crankcase venting system components.

Note: Some engines with plastic cylinder head covers may have aluminum bolts.

cardiagn.com

Cylinder Head

Each of the new NG6 engines has a unique cylinder head design. Due to some of the technical requirements, the cylinder heads are not interchangeable between these engines. The cylinder head from the N52KP is carried over from the N52 with little change.

The cylinder head from the N54 engine does not have Valvetronic. The design of the engine also requires accommodation of the “direct” fuel injector in the the combustion chamber. Most of the external dimensions are the same as the N52 to accommodate accessories and ancillary components.

The N51 engine is a SULEV II compliant design which has a lower compression ratio. The combustion chamber design has been modified to work in conjunction with the N51 piston to achieve the required emission goals.

Valvetrain

The valvetrain on the N52 introduced in 2006, used 5 mm valve stems on both the intake and exhaust. To increase durability, the exhaust valve stems were increased to 6 mm from 6/06 production.

All of the new NG6 engine have adopted the 6 mm valve stem for the exhaust, the intake stem remains at 5mm. The valves are of the “solid” type design (not Sodium filled). The diameter of the valve head is engine specific.

Camshafts

The lightweight hydroformed camshaft will still be used on the NG6 engines. Be aware that some engines may use the “cast” camshaft design. This is for supply and production reasons.

Cast and hydroformed camshafts are completely interchangeable. For example, a replacement camshaft may differ from the original. This is no problem, they will fit and work properly without any modifications.

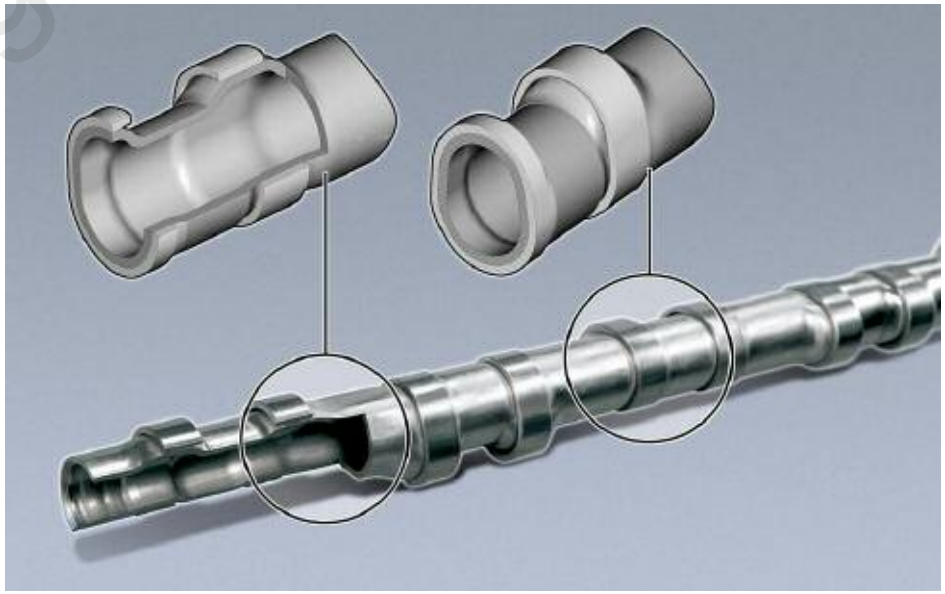

cardiagn.com

VANOS

The infinitely variable Bi-VANOS system is still in use on all NG6 engines. The VANOS system still retains the use of the lightweight VANOS adjusting units introduced on the N52. The only change to the system is that the N54 engine uses different spread ranges for compatibility with turbocharged engine operation.

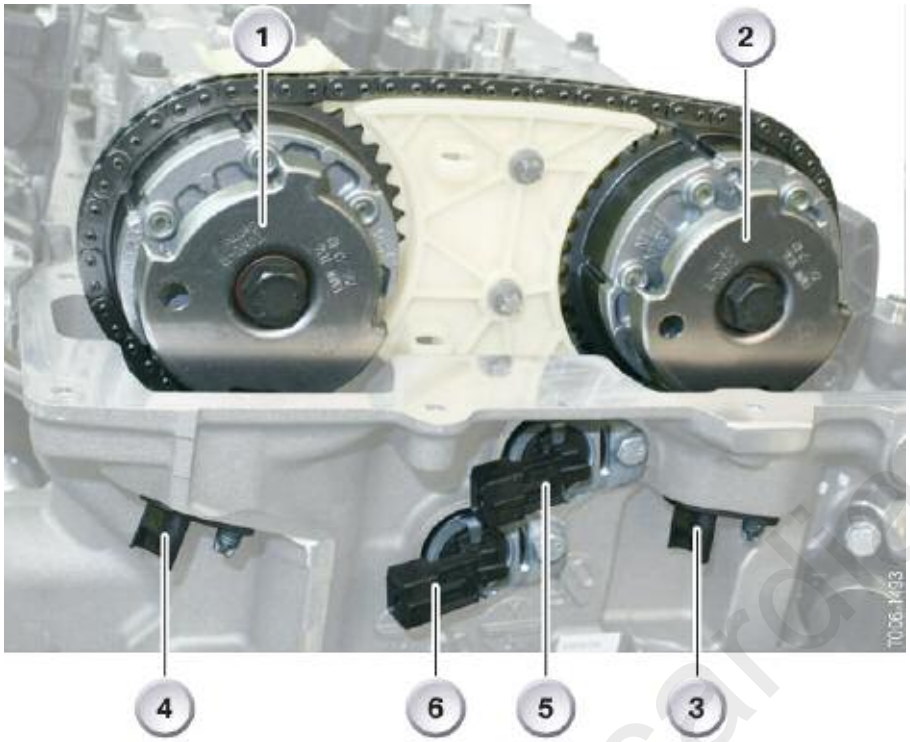

Index	Explanation	Index	Explanation
1	VANOS unit, exhaust	4	Exhaust camshaft sensor
2	VANOS unit, intake	5	VANOS solenoid valve
3	Intake camshaft sensor	6	VANOS solenoid valve

Note: Do not mix up the intake and exhaust VANOS units. They appear similar, but have different spread ranges. Improper installation can result in valvetrain damage.

Valvetronic

The N51 and N52KP engines retain the already proven Valvetronic system from the N52. The only change for 2007 is an optimized VVT motor which has already been in production from 5/06.

The N54, on the other hand, does not use the Valvetronic system. Valvetronic is designed to reduce pumping losses and improve engine efficiency. The turbocharging system on the N54 is also designed to reduce pumping losses and increase engine efficiency.

Therefore, there is no need to have both systems on one engine. In summary, the efficiency of the N54 is gained through exhaust turbocharging and direct injection rather than Valvetronic.

Valvetronic II - used on N52, N52KP and N51

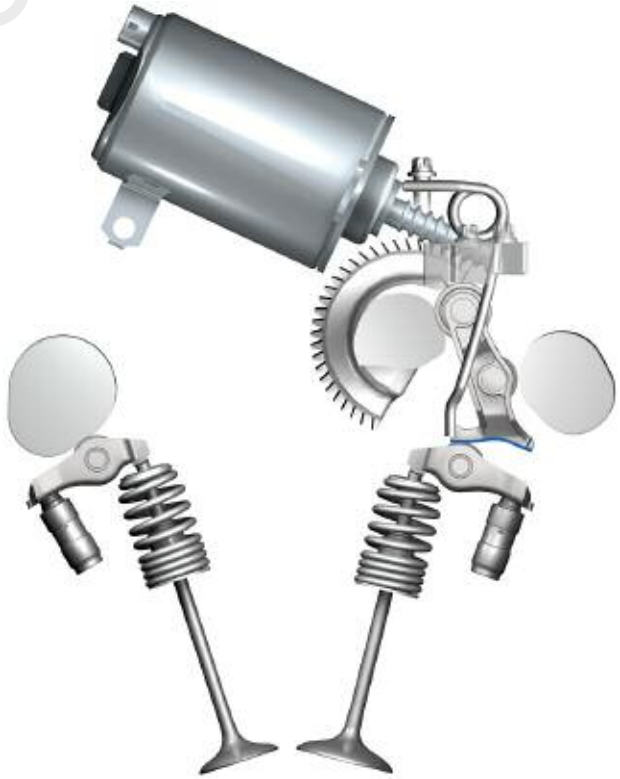

cardiagn.com

Gaskets and Seals

Head Gasket
The head gasket design on the N54 is unique to that engine.

It features a multi-layer steel design. There is no silicone rubber perimeter “shelf” as on the N52. This is not needed due to the aluminum block on the N54.

The N52KP and N51 engines are still using the head gasket that is familiar from N52.

Oil Pan Gasket
All of the new NG6 engine use the same oil pan gasket as introduced on the N52.

The oil pan gasket design is compatible with the N54, therefore it was not necessary to create an additional part.

Bedplate Sealing
The N54 continues to use the injected sealant method for the bedplate.

Crankshaft Drive Components

Crankshaft
The crankshaft on the N52KP and N51 remains a cast iron design. This crankshaft is carried over from the N52.

The additional torque generated by the N54 requires the use of a forged steel crankshaft.

Piston and Connecting Rods
Due to the design requirements of each of the new NG6 engines, the piston design is unique to each version. For instance, the N54 is turbocharged and direct injected and requires a piston which meets the design requirements for compression and mixture formation.

The N51 engine need a piston which has lower compression and meets the SULEV II requirements for emission compliancy.

The N52KP and N52 engines both use the same piston design.

The connecting rods on the new engines use a thicker beam design which has been in production on the N52 since 6/06. The N54 has a special connecting rod with M9 bolts instead of the M8 bolts on the other engines.

Torsional Vibration Damper
The vibration damper has been updated to improve the damping of first order vibrations. The damper is secured with new bolts and has a revised tightening procedure. The procedure differs from the N52 and should therefore not me mixed up. Damage to the belt drive can result from improper tightening procedures.

Intake Manifold

The plastic intake manifold from the N52 is carried over to the new NG6 engines. However, the 3-Stage DISA version of the intake manifold is only used on the “O” version (high output).

The current N51 engine is designated as a medium output “M” version at 230 hp and does not require the 3-stage DISA. The same applies to the “M” version of the N52KP engine as well.

There are small modifications to these intake manifolds due to the fact that the crankcase ventilation system has been updated.

As far as the N54 engine is concerned, the intake manifold is designed specifically for the turbocharging system. The N54 does not require DISA as turbocharging supplies the necessary torque increase when needed.

3-Stage DISA Intake Manifold

Intake Manifold - N54

Workshop Exercise - Engine Mechanical (N54)

Using the instructor designated engine trainer, please remove the cylinder head cover using procedures as outlined in the repair instructions. (steel fuel lines, injectors and coils must be removed first)

Are any aluminum bolts encountered in this process and if so, where?

Are there any special tools required to remove the cylinder head cover and/or injectors? If, so list the tools and the purpose:

Regarding the fuel lines (between injectors and rail), are there any special tightening (or loosening) procedures to follow? Is so, what are they?

What is different about the camshaft arrangement on the N54 as compared to the N52? What special tools are needed to remove and install the intake camshaft?

cardiagn.com

Workshop Exercise - Engine Mechanical (N54)

Continue by removing spark plugs (injectors should already be removed)

What special tool is required to remove the injectors when they are seized?

What is unique about the spark plugs on the N54 are compared to the N52? Are any special tools required to R&R?

Re-install spark plugs. Leave out injectors for next exercise.

When should the Teflon rings be changed on the injector? What special tools are involved?

Demonstrate the proper use of the o-ring tool by replacing the injector O-rings:

Remove the drive belts, crankshaft pulley/torsional damper using proper procedures. Remove timing chain tensioner and crankshaft central hub.

What is different about this process as compared to the N52?

cardiagn.com

Workshop Exercise - Engine Mechanical (N54)

What is the purpose of the “friction rings”?

Re-assemble torsional damper, pulley and drive belts.

List the proper torque procedure for the torsional damper: (is this different from N52?)

If necessary, re-check camshaft timing before installing cylinder head cover.

Re-install cylinder head cover and fuel injectors,lines and ignition coils

Notes:

cardiagn.com

Classroom Exercise - Review Questions

1. Circle the engine below which uses an all-aluminum crankcase:

2. Circle the engines listed below which use exhaust valves that have 5 mm stems: (circle one)

N54 N52 (early) N52KP N51

3. Why doesn't the N54 engine use Valvetronic or DISA?

_____

_____

_____

_____

4. The "M" in the following designation - "N52B30M1" stands for: (circle one)

Medium Motorsport Maximum Manual

5. The new X3 3.0 si (E83 LCI) uses which if the following engines: (circle one)

N52 N52KP N54 N51

6. Which version of the N52KP is used in the 328 (E92)? (circle one)

"O" "M" "U" "TU"

7. Which of the following engine pairs shares the same piston design? (circle one)

N51 and N52 N52 and N52KP

N54 and N52 N51 and N54

8. Which of the following engines uses the "3-Stage DISA" intake manifold?

N54B30O0 N52B30M1

N51B30M0 N52B30O1

9. Of the engines listed below, which one does NOT use a cylinder head gasket with a silicone rubber lip?

N52 N52KP N54 N51

10. Which of the NG6 engines uses direct injection (HPI)?

N52 N52KP N54 N51

cardiagn.com

NOTES PAGE

cardiagn.com

Crankcase Ventilation

One of the major changes on the new NG6 engines is that the crankcase ventilation system has been upgraded and improved. This applies to all of the new NG6 versions (N52KP, N51 and N54).

There are two distinct versions of crankcase ventilation. One type is unique to the N54 and the other applies to N51 and N52KP.

The N52, which is still in production continues to use the “external” crankcase ventilation system with the electrically heated crankcase ventilation valve/cyclone separator.

Crankcase Ventilation System on N52

Crankcase Ventilation (N51 and N52KP)

The crankcase ventilation system on the N51 and N52KP has been modified as compared to the N52. The system is integrated into the plastic cylinder head cover.

The crankcase gases are regulated by a crankcase ventilation valve similar to the design used on the N62. The crankcase vent valve is currently part of the cylinder head cover and is not replaceable as a separate component.

Oil separation is carried out via a “labyrinth” system and two cyclone separators which are incorporated into the cylinder head cover. By having the system components integrated into the cylinder head cover, the crankcase gases are heated by the engine rather than an electric heater as on the N52. However, there is still one electric heating element at the manifold inlet.

Once the liquid oil is separated from the crankcase vapors, the oil is allowed to drain back through check valves back into the engine.

N52KP Cylinder Head Cover (cutaway view)

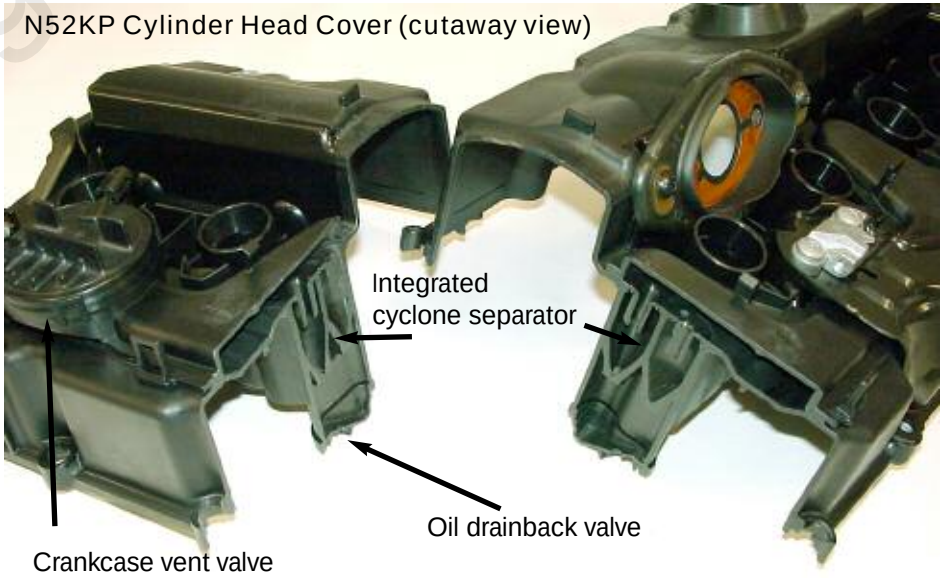

cardiagn.com

Crankcase Ventilation (N54)

Since the N54 is a turbocharged engine, the crankcase ventilation system has to meet certain design requirements. For example, when the engine is in turbocharged mode, the increased manifold pressure should not have an adverse effect on the crankcase venting. This is why, there is no crankcase ventilation valve in the system.

The system consists of four small cyclone separators which are integrated into the plastic cylinder head cover. The flow of crankcase gases is metered through a series of restrictions which control the ultimate crankcase pressure.

Cyclone Separator Operation

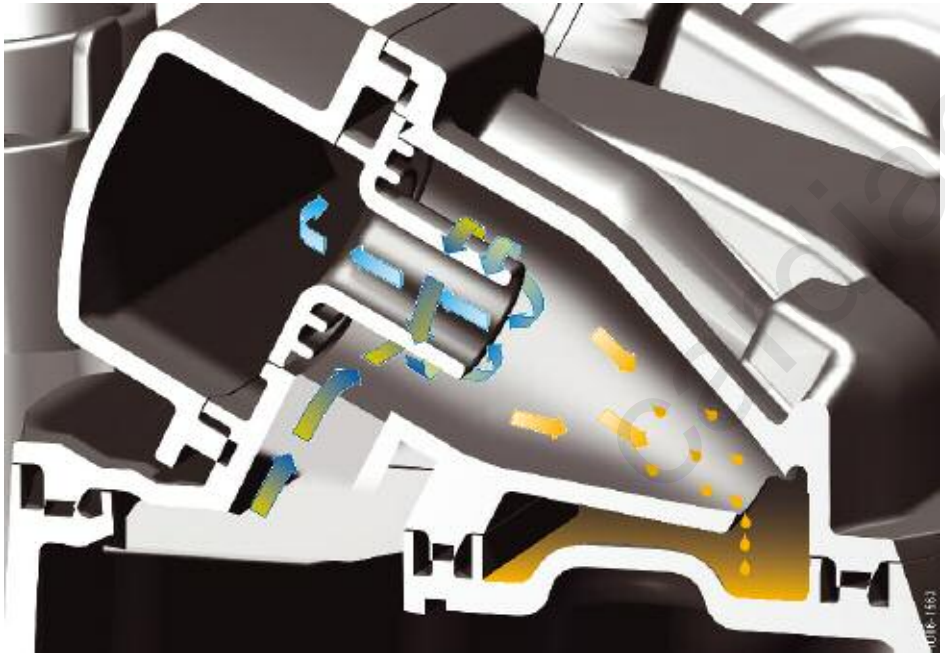

One of the main operating principles behind the crankcase venting system on the N54 is that there are two strategies - one for the turbocharged mode and one for “non-turbocharged” operation such as decel. These strategies are dependent upon the intake manifold pressure.

N54 Cylinder Head Cover (cutaway view)

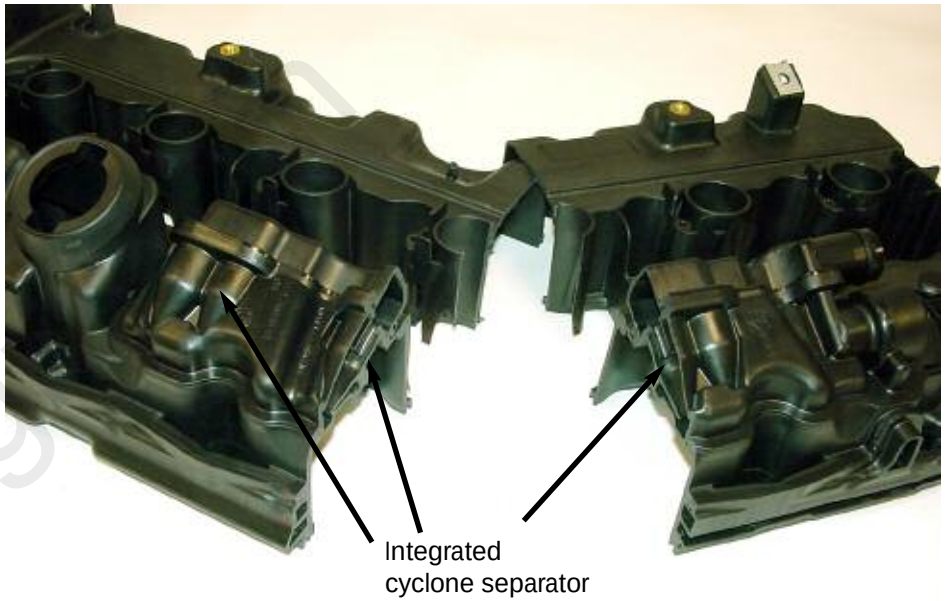

Crankcase Ventilation System Overview (N54)

Crankcase ventilation system in “decel mode”

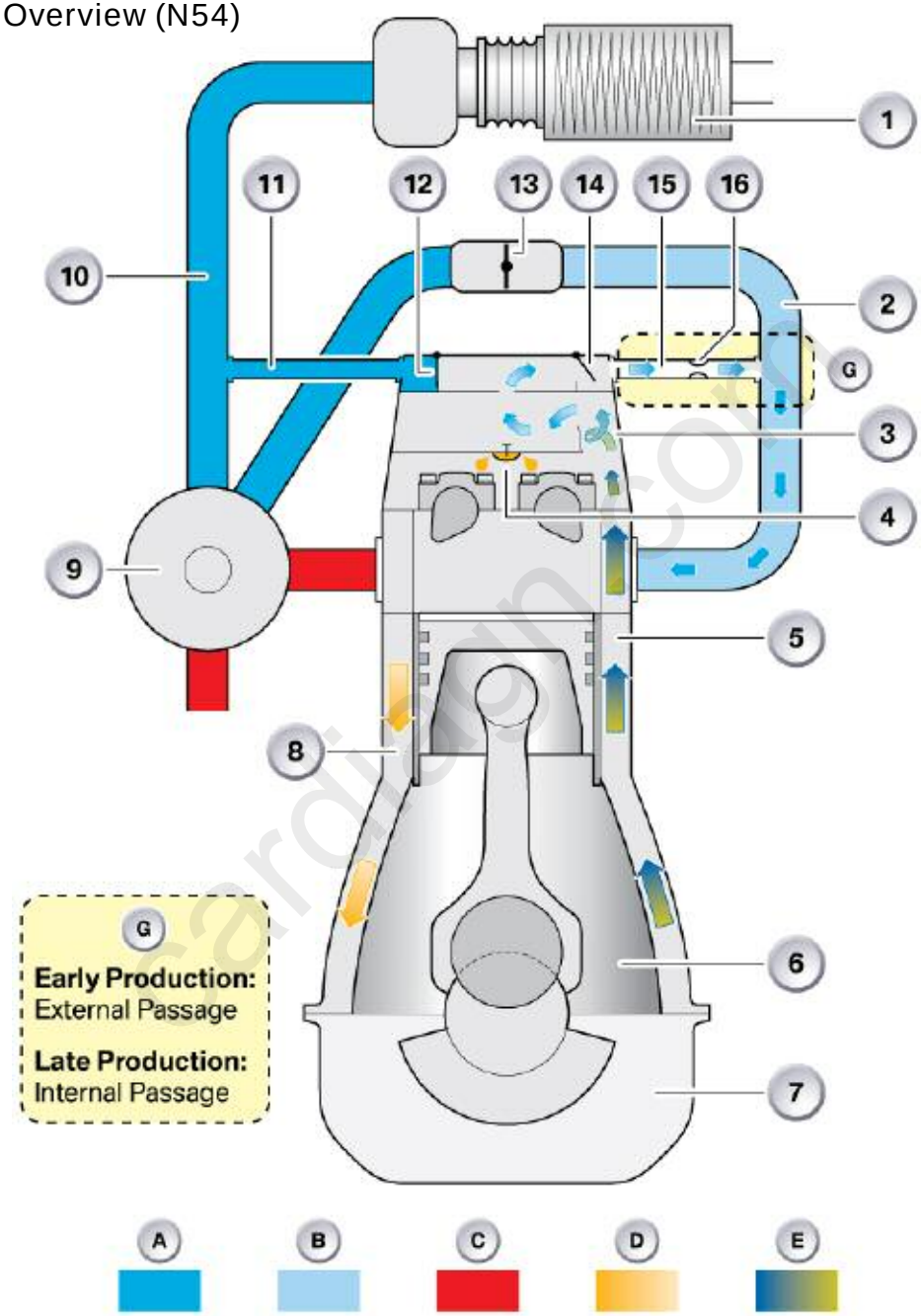

Crankcase Ventilation System Overview (N54)

Crankcase ventilation system in "turbocharged mode"

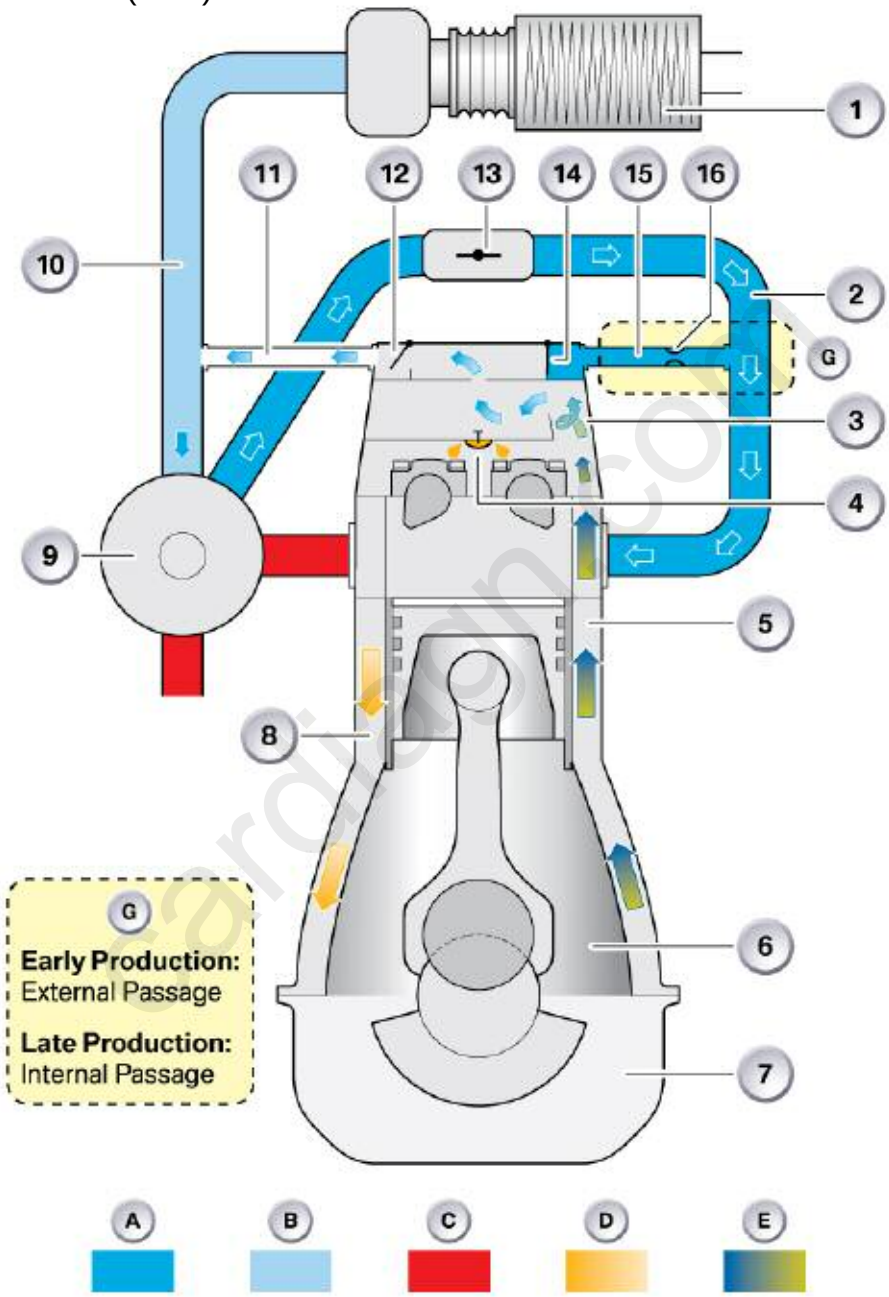

Workshop Exercise - Crankcase Venting (N54)

Using an instructor designated vehicle or training aid (engine), compare the crankcase venting system diagrams on the two previous pages to the actual engine. Complete the chart at the right by filling in the missing components from the list of items below:

Charge-air suction line, bank 2

Pressure restrictor

Check valve, charge air suction line

Channel to manifold

Cyclone oil separator

Oil discharge valve

Hose to charge air suction line, bank 2

Check valve, manifold

Complete the exercise, by matching the above components to the actual engine components on the engine mock-up or vehicle.

Why are there two modes of operation for the crankcase venting system on the N54?

Index	Explanation	Index	Explanation
A	Overpressure	7	Oil Sump
B	Low pressure (vacuum)	8	Oil return channel
C	Exhaust gas	9	Turbocharger
D	Liquid oil	10	
E	Blow-by gases	11	
1	Air cleaner	12	
2	Intake manifold	13	Throttle valve
3		14	
4		15	
5	Venting channel	16	
6	Crankshaft cavity		

cardiagn.com

Workshop Exercise - Crankcase Venting

While diagnosing a condition of “blue smoke” from the tailpipe on the N54, the technician finds oil in the “Charge air suction pipe”. What would be a possible cause of this condition?

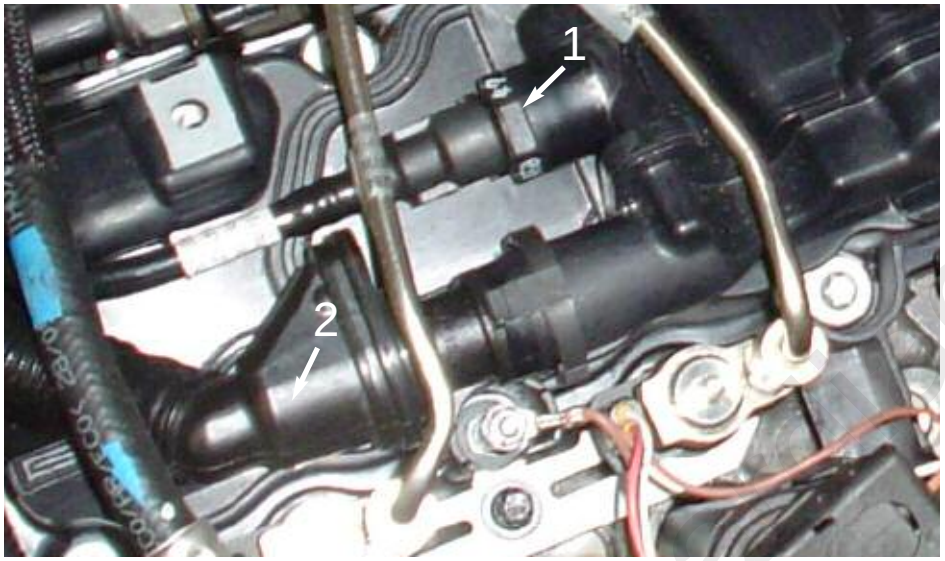

Name the components above and their purpose:

1.

2.

Check the ETM for the N54 and locate any PTC heating elements for the crankcase venting system. List the locations below:

Why are most of the crankcase ventilation components located in the cylinder head cover?

carsign.com

Summary of Mechanical Changes

Component/System	N52 Engine	N52KP	N51	N54
Crankcase	Composite magnesium/aluminum	Composite magnesium/aluminum	Composite magnesium/aluminum	All aluminum alloy
Cylinder Head	Aluminum	Aluminum (same as N52)	Aluminum - Specific to N51 due to combustion chamber modifications	Aluminum - specific to N54
Cylinder Head Gasket	Silicone rubber perimeter to prevent contact corrosion	Same as N52	Same as N52	Specific to N54 - multi-layer with no silicone rubber perimeter
Cylinder Head Cover	Magnesium	Plastic with integrated crankcase ventilation	Plastic with integrated crankcase ventilation (same as N52KP)	Plastic with integrated crankcase ventilation (specific to N54)
Crankcase Ventilation	External crankcase vent valve with cyclone separator.	Crankcase vent valve and “labyrinth” and cyclone oil separation integrated into cylinder head cover.	Crankcase vent valve and “labyrinth” and cyclone oil separation integrated into cylinder head cover.	No crankcase vent valve - uses calibrated orifice with cyclone separation integrated into cylinder head cover.
Valvetrain	5 mm intake and exhaust valve stems (6 mm exhaust valve stem from 6/06)	5 mm intake and 6 mm exhaust valve stems	5 mm intake and 6 mm exhaust valve stems	5 mm intake and 6 mm exhaust valve stems
VANOS	Infinitely variable Bi-VANOS	Infinitely variable Bi-VANOS	Infinitely variable Bi-VANOS	Infinitely variable Bi-VANOS
Valvetronic	Valvetronic II	Valvetronic II	Valvetronic II	No Valvetronic
Intake Manifold	Plastic with 3-stage DISA on high-output version (OL)	Plastic with 3-stage DISA on high-output version (O)	Plastic	Plastic (no DISA)
Fuel System	Manifold injection	Manifold injection	Manifold injection	High Precision Injection (HPI)
Cooling System	Electric coolant pump - 200 W	2 nd Generation electric coolant pump - 200 W	2 nd Generation electric coolant pump - 200 W	2 nd Generation electric coolant pump - 400 W
Exhaust System	“Near Engine” catalysts	“Near Engine” catalysts with underbody catalysts (ULEV II)	“Near Engine” catalysts with underbody catalysts (SULEV II)	“Near Engine” catalysts with underbody catalysts (ULEV II)
Pistons/Compression Ratio	10.7 to 1	10.7 to 1	10 to 1	10.2 to 1
Connecting Rods/Crankshaft	Forged Steel with 8 mm bolts “cracked design” (Cast Crankshaft)	Forged Steel (stiffened) with 8 mm bolts “cracked design” (Cast crankshaft)	Forged Steel (stiffened) with 8 mm bolts “cracked design” (Cast crankshaft)	Forged Steel (stiffened) with 9 mm bolts “cracked design” (Forged steel crankshaft)
HFM	Analog	Digital	Digital	Digital

cardiagn.com

NOTES PAGE

cartiagn.com

MSD80 Engine Management Overview (E9X)

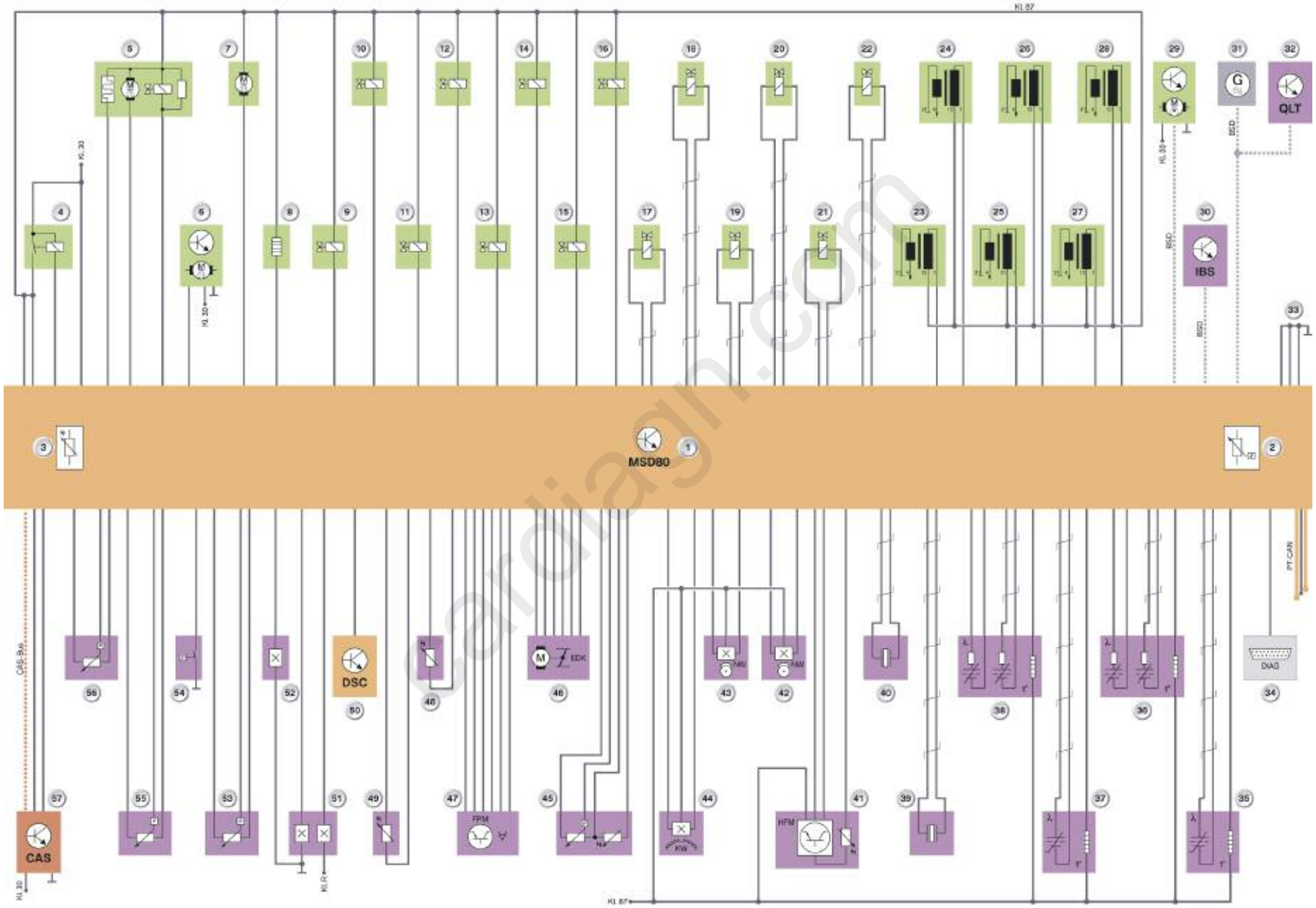

cardiagn.com

Legend for MSD80 Overview

Index	Explanation
1	ECM (DME - MSD80)
2	Temperature sensor in DME control unit
3	Ambient-pressure sensor in DME control unit
4	DME main relay
5	Diagnosis module for fuel tank leakage (DMTL)
6	Electric fan (engine cooling)
7	E-box fan
8	Characteristic map thermostat
9	Fuel tank vent valve (TEV)
10	VANOS solenoid valve, inlet
11	VANOS solenoid valve, exhaust
12	Sound flap
13	Exhaust flap
14	Fuel-supply control valve
15	Wastegate valve, bank 1
16	Wastegate valve, bank 2
17-22	Piezo-injectors
23-28	Ignition coils
29	Electric coolant pump
30	Intelligent battery sensor
31	Alternator
32	Oil condition sensor
33	Ground connection

Index	Explanation
34	Diagnostics connection
35	Oxygen sensor (secondary O2 sensor with discontinuous characteristic)
36	Oxygen sensor (primary O2 sensor with continuous characteristic)
37	Oxygen sensor (secondary O2 sensor with discontinuous characteristic)
38	Oxygen sensor (primary oxygen sensor with continuous characteristic)
39-40	Knock sensors
41	Hot-film air-mass sensor (HFM)
42	Camshaft sensor, inlet
43	Camshaft sensor, exhaust
44	Crankshaft sensor
45	Pressure/temperature sensor before throttle valve (boost pressure)
46	Throttle valve
47	Accelerator pedal module
48	Coolant-temperature sensor at engine outlet
49	Coolant-temperature sensor at radiator outlet
50	DSC control unit (Dynamic Stability Control)
51	Brake-light switch
52	Clutch switch
53	Pressure sensor after throttle valve (intake-manifold pressure)
54	Oil pressure switch
55	Low-pressure fuel sensor
56	High-pressure fuel sensor (rail pressure sensor)
57	CAS control unit (Car Access System)

cardiagn.com

MSV80 Engine Management Overview (E70)

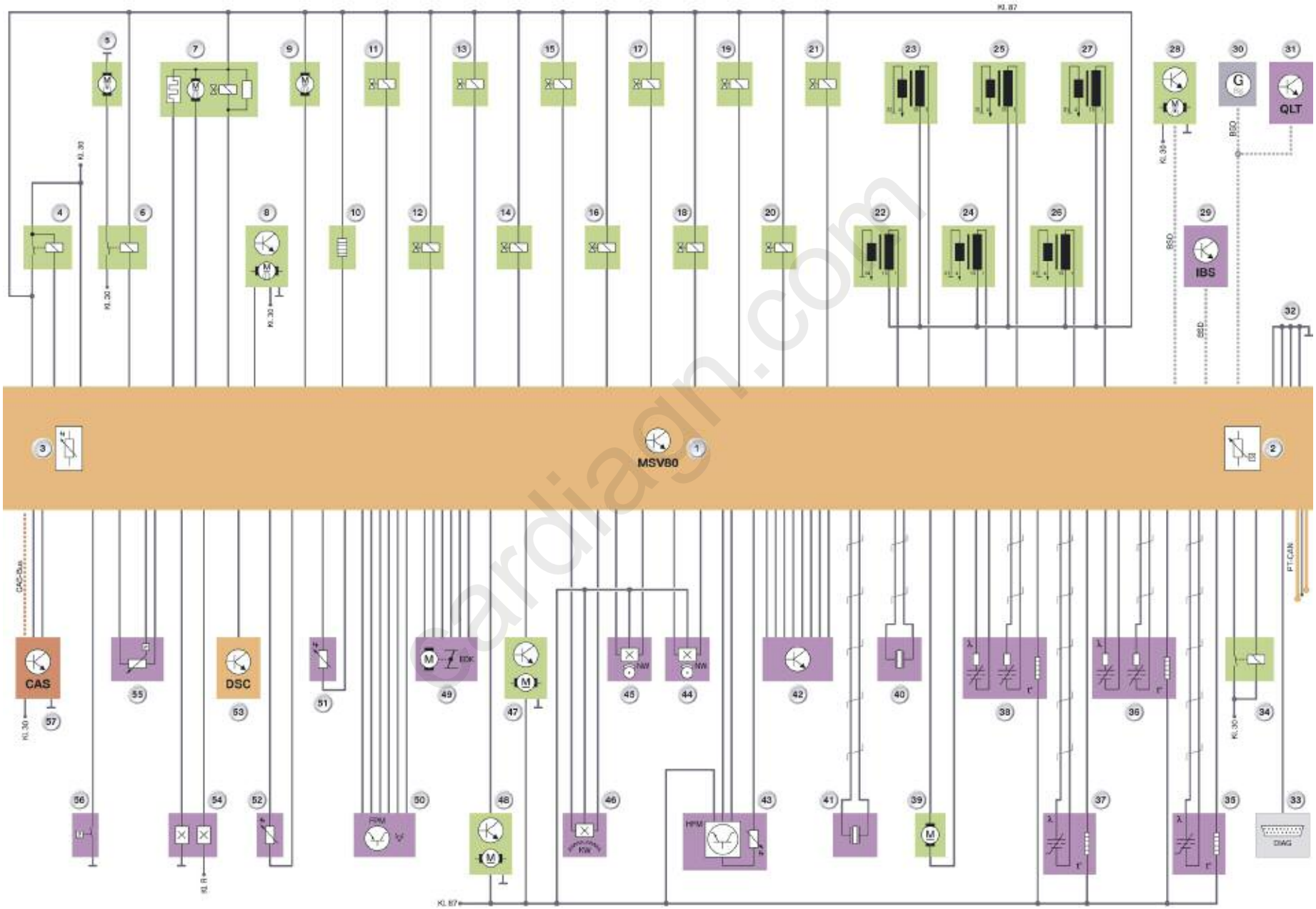

cardiagn.com

Legend for MSV80 Overview

Index	Explanation
1	ECM (DME - MSD80)
2	Temperature sensor in DME control unit
3	Ambient-pressure sensor in DME control unit
4	DME main relay
5	Electric Fuel Pump (EKP)
6	EKP Relay
7	DM-TL
8	Electric fan (engine cooling)
9	E-box fan
10	Characteristic map thermostat
11	Fuel tank vent valve (TEV)
12	VANOS solenoid valve, inlet
13	VANOS solenoid valve, exhaust
14	Sound flap
15	Exhaust flap
16-21	Fuel injectors
22-27	Ignition coils
28	Electric coolant pump
29	Intelligent battery sensor
30	Alternator
31	Oil condition sensor
32	Ground connection
33	Diagnostics connection

Index	Explanation
34	Valvetronic Relay
35	Oxygen sensor (secondary O2 sensor with discontinuous characteristic)
36	Oxygen sensor (primary O2 sensor with continuous characteristic)
37	Oxygen sensor (secondary O2 sensor with discontinuous characteristic)
38	Oxygen sensor (primary oxygen sensor with continuous characteristic)
39	Valvetronic actuator motor (VVT)
40-41	Knock sensors
42	Eccentric shaft sensor
43	Hot-film Air Mass Meter (HFM)
44	Camshaft sensor, inlet
45	Camshaft sensor, exhaust
46	Crankshaft sensor
47	DISA Actuator motor
48	DISA Actuator motor
49	Throttle valve
50	Accelerator pedal module
51	Coolant-temperature sensor at engine outlet
52	Coolant-temperature sensor at radiator outlet
53	DSC control unit
54	Brake light switch
55	Differential pressure sensor
56	Oil pressure switch
57	CAS control unit (Car Access System)

cardiagn.com

Air Management

Air Management N52KP and N51

As far as the air management system on the N52KP and N51 engines is concerned, the previous intake manifold system on the N52 is carried over. Depending upon application, the engines will use the 3-stage DISA or the single stage (No DISA) intake manifold.

For more information on the DISA system refer to the previous training material in the training course “ST501 - New Engine Technology”.

Throttle Valve

All variants of the new NG6 engines receive the new EGAS 08 throttle by Siemens/VDO. The new throttle uses a plastic throttle valve and magneto-resistive feedback to the ECM.

The previous system used a potentiometer, whereas the new throttle uses a “contactless” system featuring magneto-resistive technology which is familiar from the eccentric shaft sensor on Valvetronic systems.

The magneto-resistive sensors are integrated into the housing cover. The sensors are also non-wearing.

For plausibility, the one sensor outputs the analog signal in the range from 0.3 to 4.6 V and the other sensor inverts it again from 4.6 to 0.3 V.

Consequently, the contact force is 10 times greater than that of a conventional plug connector.

Note: It is possible to twist the connector before plugging it in. This can cause damage to the harness and connector.

Air Intake Ducting

With regard to the N54 engine, the air intake ducting plays a significant role due to the requirements of a turbocharged engine.

In principle, the energy of the escaping exhaust gases is utilized to “pre-compress” the inducted fresh air and thus introduce a greater air mass into the engine. This is only possible if the air intake ducting is “leak-free” and installed properly.

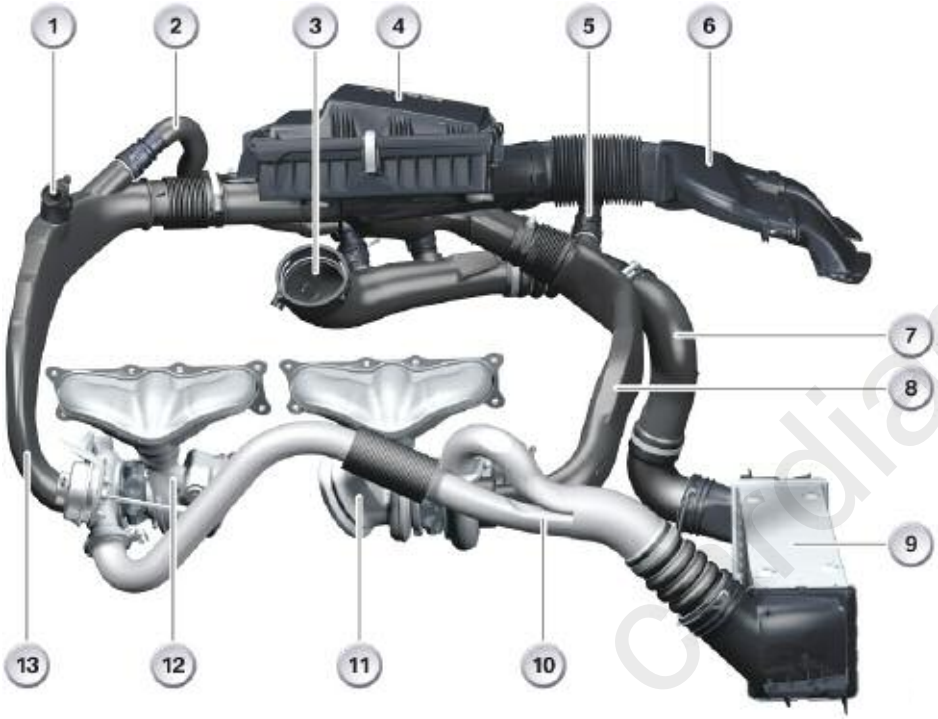

Index	Explanation	Index	Explanation
1	PTC heater, blow-by gases (in turbo mode)	8	Charge air suction line, bank 1
2	Recirculated air line, bank 2	9	Intercooler
3	Connecting flange, throttle valve	10	Charge air manifold
4	Air cleaner	11	Turbocharger, bank 1
5	Recirculated air line, bank 1	12	Turbocharger, bank 2
6	Air-intake snorkel	13	Charge air suction line, bank 2
7	Charge air pressure line		

It is important to note, when carrying out work on the air-intake ducting, it is important to ensure that the components are installed in the correct position and that all pipes are connected with tight seals.

A leaking system may result in erroneous boost pressure. This would be detected by the engine management system and will ultimately result in “limp-home” operation. There would also be a noticeable reduction in engine power.

For some of the duct work, there are special tools to ensure proper connections.

cardiagn.com

Air Intake Ducting Function

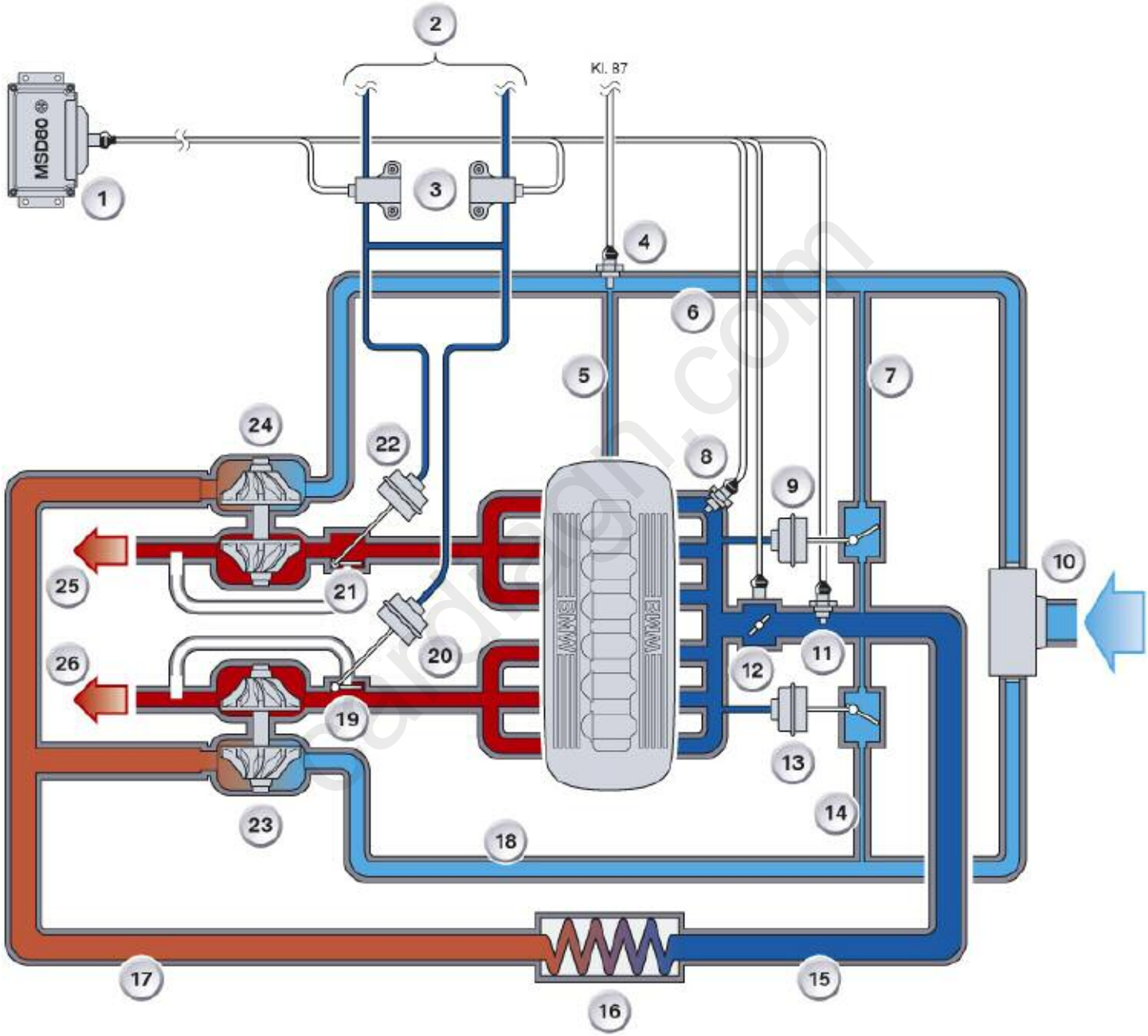

Legend for Air Intake Ducting Function

Index	Explanation	Index	Explanation
1	MSD80 Engine control module	14	Recirculated-air line, bank 1
2	Lines to vacuum pump	15	Charge air pressure line
3	Electro-pneumatic pressure transducer	16	Intercooler
4	PTC heater, blow-by gases	17	Charge air manifold
5	Blow-by line turbocharged operation mode	18	Charge air suction line, bank 1
6	Charge air suction line, bank 2	19	Wastegate flap, bank 1
7	Recirculated-air line, bank 2	20	Wastegate actuator, bank 1
8	Intake manifold pressure sensor	21	Wastegate flap, bank 2
9	Blow-off valve, bank 2	22	Wastegate actuator, bank 2
10	Air cleaner	23	Turbocharger, bank 1
11	Charge air pressure and temperature sensor	24	Turbocharger, bank 2
12	Throttle valve	25	To catalytic converter, bank 2
13	Blow-off valve, bank 1	26	To catalytic converter, bank 1

The fresh air is drawn in via the air cleaner (10) and the charge-air suction lines (6 + 18) by the compressors of turbochargers (23 + 24) and compressed.

Because the turbochargers can get very hot during operation, they are connected with the engine's coolant and engine-oil circuits. The charge air is greatly heated when it is compressed in the turbocharger, making it necessary for the air to be cooled again in an intercooler (16).

The compressed and cooled charge air is routed from the intercooler via the throttle valve (12) into the intake manifold.

The system is equipped with several sensors and actuators in order to ensure that the load of fresh air is optimally adapted to the engine's respective operating conditions. How these complex interrelationships are controlled is discussed in the following sections.

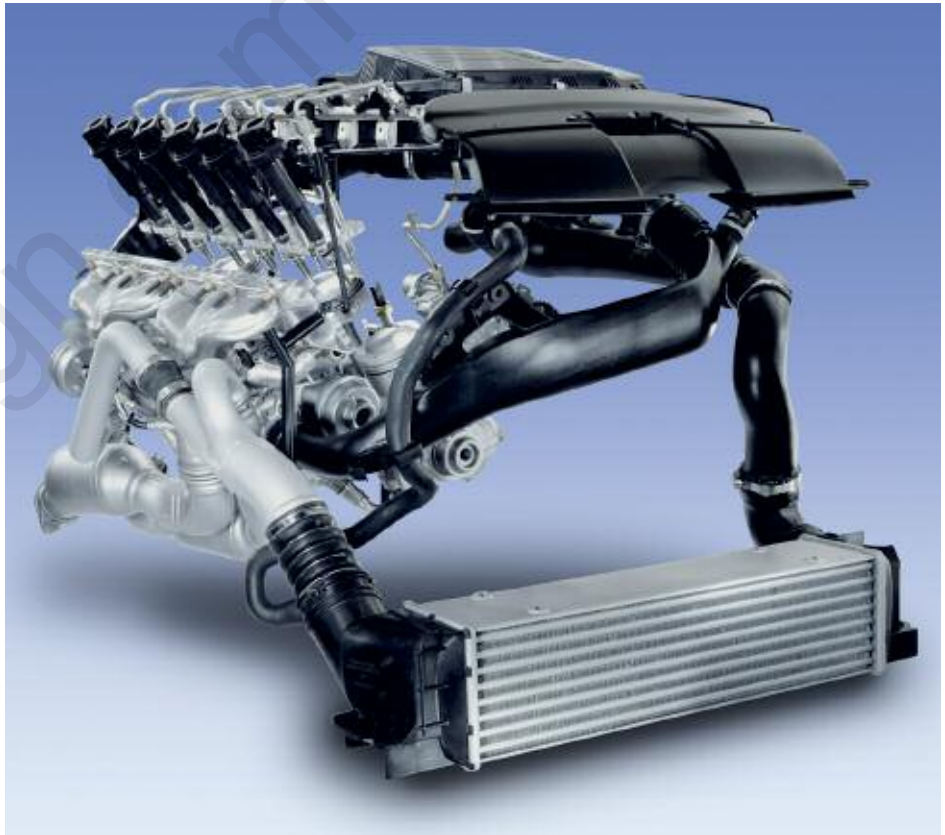

Exhaust Gas Turbocharging

The turbocharger is driven by the engine's exhaust gases, i.e. exhaust gases under pressure are routed by the turbocharger turbine and in this way delivers the motive force to the compressor, which rotates on the same shaft.

It is here that the induction air is precompressed in such a way that a higher air mass is admitted into the engine's combustion chamber. In this way, it is possible to inject and combust a greater quantity of fuel, which increases the engine's power output and torque.

The turbine and the compressor can rotate at speeds of up to 200,000 rpm. The exhaust inlet temperature can reach a maximum of 1050°C. Because of these high temperatures, the N54 engine's turbochargers are not only connected with the engine-oil system but also integrated in the engine-coolant circuit.

It is possible in conjunction with the N54 engine's electric coolant pump even after the engine has been switched off to dissipate the residual heat from the turbochargers and thus prevent the lube oil in the bearing housing from overheating.

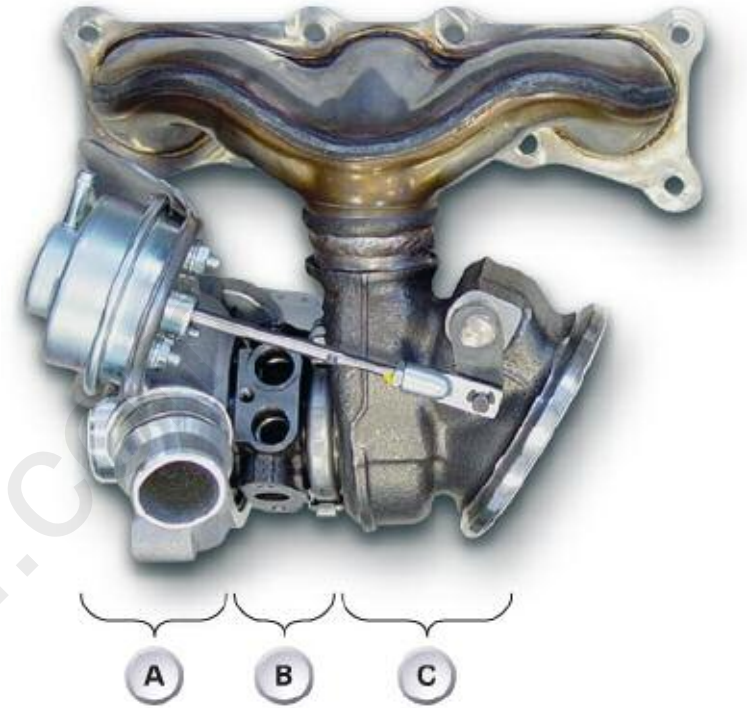

Index	Explanation
A	Compressor
B	Cooling/Lubrication
C	Turbine

cardiagn.com

Bi-turbocharging

Utmost importance is attached to turbocharger response in the N54 engine. A delayed response to the driver's command, i.e. the accelerator-pedal position, is not acceptable. The driver therefore must not experience any so-called "turbo lag".

This requirement is met in the N54 engine with two small turbochargers, which are connected in parallel. Cylinders 1, 2 and 3 (bank 1) drive the first turbocharger (5) while cylinders 4, 5 and 6 (bank 2) drive the second (2).

The advantage of a small turbocharger lies in the fact that, as the turbocharger runs up to speed, the lower moment of inertia of the turbine causes fewer masses to be accelerated, and thus the compressor attains a higher boost pressure in a shorter amount of time.

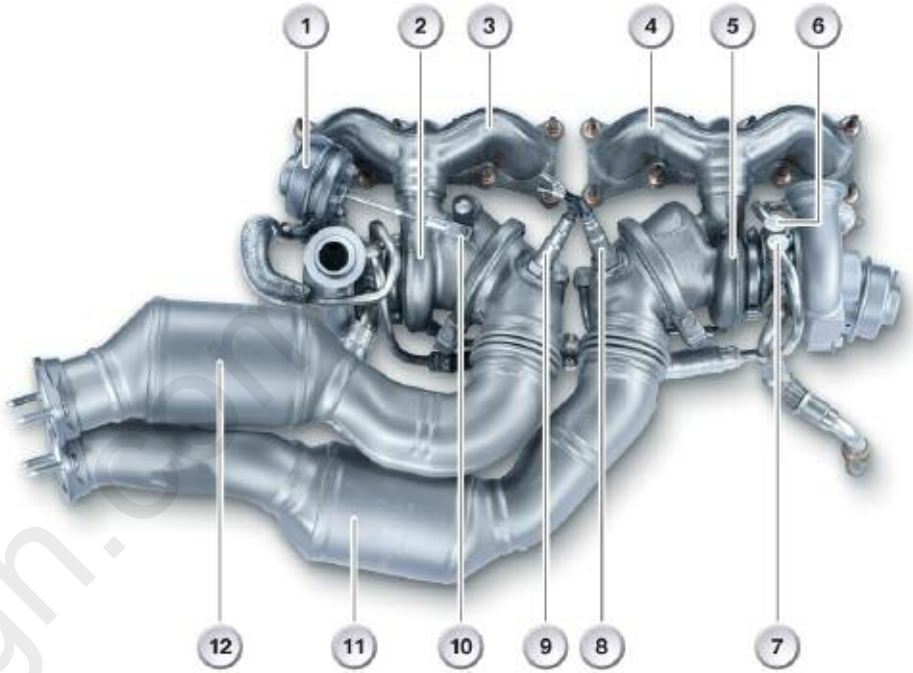

Index	Explanation	Index	Explanation
1	Wastegate actuator, bank 2	7	Coolant supply
2	Turbocharger, bank 2	8	Planar broad-band oxygen sensor, bank 1
3	Exhaust manifold, bank 2	9	Planar broad-band oxygen sensor, bank 2
4	Exhaust manifold, bank 1	10	Wastegate actuating lever
5	Turbocharger, bank 1	11	Catalytic converter, bank 1
6	Coolant return	12	Catalytic converter, bank 2

cardiagn.com

Boost-pressure Control

The boost pressure of the turbochargers is directly dependent on the flow of exhaust gas which reaches the turbocharger turbines. Both the velocity and the mass of the exhaust-gas flow are directly dependent on engine speed and engine load.

The engine-management system uses wastegate valves to control the boost pressure. These valves are operated by vacuum-pressure actuators, which are controlled by the electro-pneumatic pressure transducers via the engine-management system.

Index	Explanation	Index	Explanation
1	Oil return, bank 1	5	Coolant return, bank 2
2	Oil supply	6	Wastegate valve
3	Coolant supply	7	Coolant return, bank 1
4	Oil return, bank 2	8	

The vacuum pressure is generated by the permanently driven vacuum pump and stored in a pressure accumulator. The system is designed to ensure that these loads and consumers do not have a negative influence on the brake-boost function.

The exhaust-gas flow can be completely or partially directed to the turbine wheel with the wastegate valves. When the boost pressure has reached its desired level, the wastegate valve begins to open and direct part of the exhaust-gas flow past the turbine wheel.

This prevents the turbine from further increasing the speed of the compressor. This control option allows the system to respond to various operating situations.

In the idle phase, the wastegate valves of both turbochargers are closed. This enables the full exhaust-gas flow available to be utilized to speed up the compressor already at these low engine speeds.

When power is then demanded from the engine, the compressor can deliver the required boost pressure without any noticeable time lag. In the full-load situation, the boost pressure is maintained at a consistently high level when the maximum permissible torque is reached by a partial opening of the wastegate valves. In this way, the compressors are only ever induced to rotate at a speed which is called for by the operating situation.

The process of the wastegate valves opening, removes the drive energy from the turbine such that no further increase in boost pressure occurs, which in turn improves overall fuel consumption.

At full-load the N54 engine operates at an overpressure of up to 0.8 bar in the intake manifold.

cardiagn.com

Blow-off Control

The blow-off valves in the N54 engine reduce unwanted peaks in boost pressure which can occur when the throttle valve closes quickly. They therefore have an important function with regard to engine acoustics and help to protect the turbocharger components.

A vacuum pressure is generated in the intake manifold when the throttle valve is closed at high engine speeds. This leads to a build-up of high dynamic pressure after the compressor which cannot escape because the route to the intake manifold is blocked.

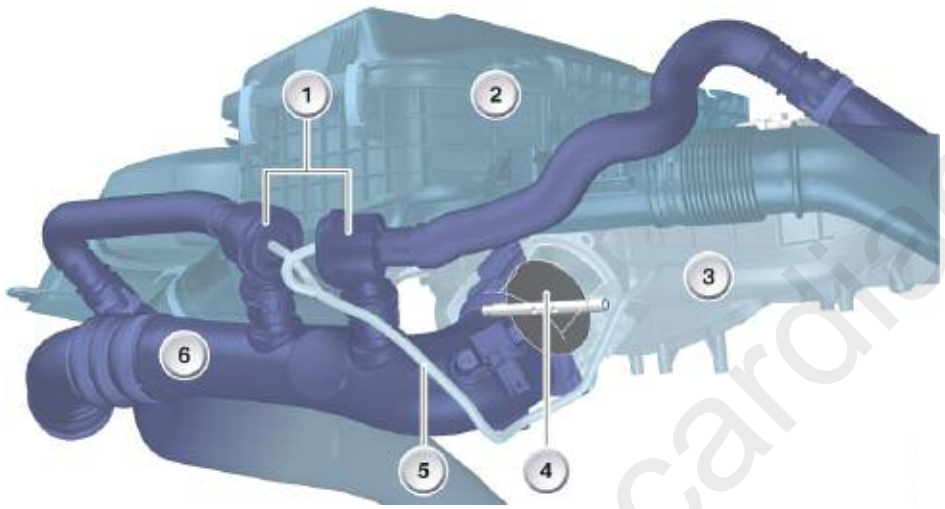

Index	Explanation	Index	Explanation
1	Blow-off valves	4	Throttle valve
2	Air cleaner (ambient pressure)	5	Control line, blow-off valves
3	Intake manifold	6	Charge air pressure line

This leads to a "pumping up" of the turbocharger which means that:

- a clearly noticeable, disruptive pumping noise can be heard,
- and this pumping noise is accompanied by a component-damaging load being exerted on the turbocharger, since high-frequency pressure waves exert axial load on the turbocharger bearings.

The blow-off valves are mechanically actuated spring-loaded diaphragm valves which are activated by the intake-manifold pressure as follows:

In the event of a pressure differential before and after the throttle valve, the blow-off valves are opened by the intake-manifold pressure and the boost pressure is diverted to the intake side of the compressor. The blow-off valves open starting from a differential pressure of 0.3 bar. This process prevents the disruptive and component-damaging pumping effect from occurring.

The system design dictates that the blow-off valves are also opened during operating close to idle (pressure differential Pcharger/Psuction = 0.3 bar). However, this has no further effects on the turbocharging system.

The turbocharger is pressurized with the full exhaust-gas flow at these low speeds and already builds up a certain level of induction-air precharging in the range close to idle.
If the throttle valve is opened at this point, the full boost pressure required is very quickly made available to the engine.

One of the major advantages of the vacuum pressure-actuated wastegate valves is that they can be partially opened in the mid-range in order not to allow excessive induction-air precharging to the detriment of fuel consumption. In the upper load range, they assume the required control position corresponding to the necessary boost pressure.

cardiagn.com

Charge-air Cooling

Cooling the charge air in the N54 engine serves to increase power output as well as reduce fuel consumption. The charge air heated in the turbocharger by its component temperature and by compression is cooled in the intercooler by up to 80°C.

This increases the density of the charge air, which in turn improves the charge in the combustion chamber. This results in a lower level of required boost pressure. The risk of knock is also reduced and the engine operates with improved efficiency.

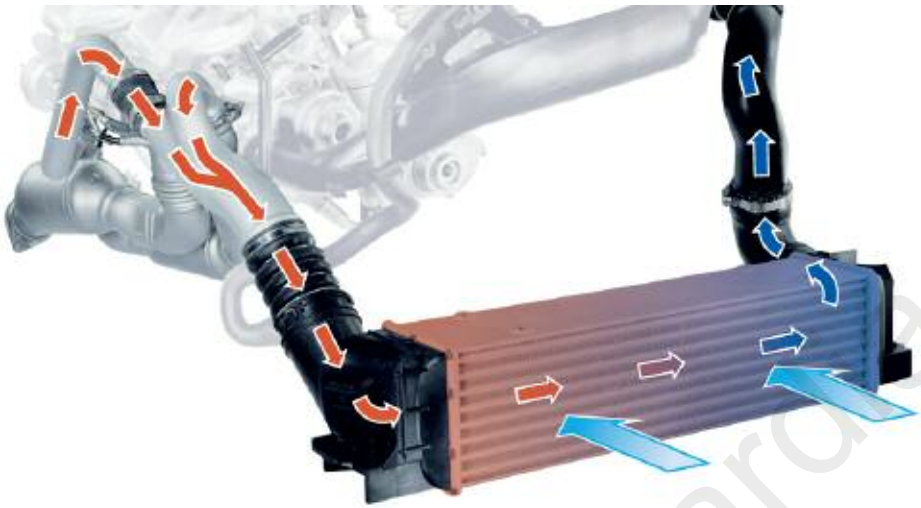

Load Control

Load control of the N54 engine is effected by means of the throttle valve and the waste gate valves.

The throttle valve is the primary component in this process. The wastegate valves are actuated to bring about a fine tuning of the boost pressure. At full load the throttle valve is completely open and load control is undertaken by the wastegate valves.

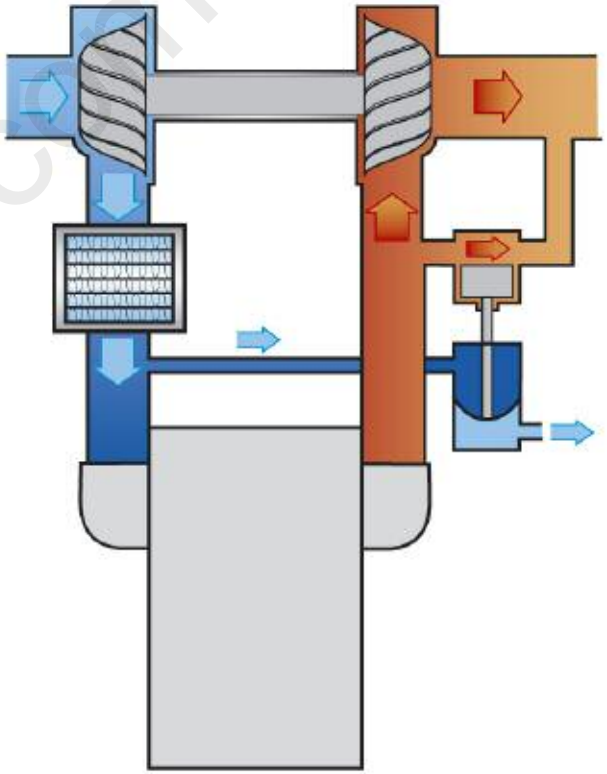

cardiagn.com

Controlled Variables

The following variables, among others, influence control of the N54 engine's boost
pressure:

- Intake-air temperature
- Engine speed
- Throttle-valve position
- Ambient pressure
- Intake-manifold pressure
- Pressure before the throttle valve (reference variable)

The electropneumatic pressure transducers are activated by the engine control unit on the basis of these variables. The result of this activation can be checked from the boost pressure achieved, which is measured before the throttle valve.

There follows a comparison of the boost pressure achieved with the setpoint data from the program map, which can if necessary give rise to an activation correction. The system therefore controls and monitors itself during operation.

Limp-home Mode

In the event during operation of malfunctions, implausible values or failure of any of the sensors involved in turbocharger control, activation of the wastegate valves is shut down and the valve flaps are thus fully opened. Turbocharging ceases at this point.

The list below sets out those components or functional groups of the N54 engine in which a failure, a malfunction or implausible values result in boost-pressure control being deactivated.

The driver is alerted to a fault of this type via an EML indication.

- High-pressure fuel system
- Inlet VANOS
- Exhaust VANOS
- Crankshaft sensor
- Camshaft sensor
- Boost-pressure sensor
- Knock sensors
- Intake-air temperature sensor

One principle of vehicle repair is particularly important in this respect:

It is important to focus on the causes rather than the effects.

With regard to diagnosis of the turbocharging system, always check the basics first. Look at such items as the vacuum hoses, the solenoids and the vacuum reservoir.

Don’t overlook the fundamentals. Check compression, fuel system pressure (low and high), secondary ignition components etc.

The turbochargers are usually the last item to fail, but often one of the first items to be replaced.

cardiagn.com

Turbocharger Diagnosis

There are three “Golden Rules” to adhere to when diagnosing concerns on the N54 engine:

1. When diagnosing cases of smoke from the exhaust, it is important to avoid unnecessary replacement of the turbochargers. Smoke can be caused by oil consumption such as the crankcase ventilation system. Always evaluate the crankcase venting system completely before condemning any turbocharger components. Also, any engine is also subject to the usual causes such as valve guide wear or piston ring issues as on non-turbocharged engines.
2. Turbocharger damage is usually caused by -
   - Insufficient lubrication and subsequent bearing and seal failure.
   - Foreign bodies can damage the turbine and/or impeller.
   - Oil contamination
   - Restricted air filter
   - Ensure that all ductwork connections are tight and “leak-free”. This situation can also result in engine noise.
3. Do not make any alterations or modifications to the turbocharger. Do not make any adjustments to the boost control linkage or any part of the turbocharger. Higher than normal boost pressure may have adverse and detrimental effects on the engine. Any modification will cause the engine management to enter in the “limp-home” program and will reduce performance and engine reliability.

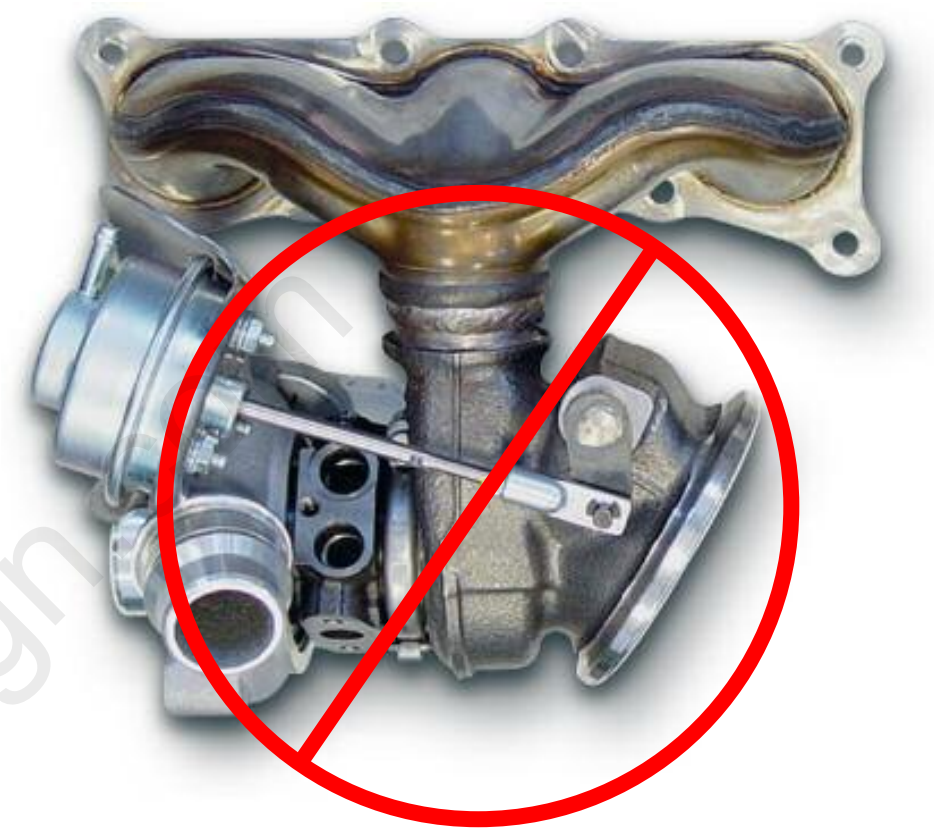

Note: No Modifications to the turbochargers are permitted.

Workshop Exercise - N54 Turbocharger

Date:	Model:	Chassis:	Prod Date:	DISplus/GT-1 Software:

Using the BMW diagnostic equipment, identify any available diagnostic options that can be used to troubleshoot the listed functions or components and mark each category accordingly.	Component Activation	Status Request	Test Plan	Signal Measurement	Notes/comments: (example: pin and connector assignments, "Function Selection" Path, Notes on Test Plans)	Service Function
Function/System/Component	Diagnosis Options				Additional Information	Purpose
Charge-air pressure control/Wastegate valves						
Charge-air pressure control/Blow-off valves						
Charge-air pressure sensor						
Intake manifold pressure sensor						
Intake manifold temperature sensor						

Measure and record the following values for the listed components under the indicated operating conditions:

Component	Operating Condition				
		High manifold vacuum	Atmospheric pressure	Low to high boost	
Wastegate Control Valve	Volts				
	Hz				
	Duty Cycle				
Charge-air Pressure Sensor	Volts				
	Hz				
	Cycle				
Intake Manifold Pressure Sensor	Volts				
	Hz				
	Duty Cycle				

cardiagn.com

Hot-Film Air Mass Meter

Some new NG6 engines use a digital HFM. The output of the sensor is converted to a digital signal. This eliminates the need for signal conversion in the ECM. The signal corresponds proportionally to changes in air mass. The N54 engine uses a virtual HFM. The signal is “calculated” in the ECM from various parameters such as engine speed, intake air temperature, throttle position etc.

Air measurement with HFM

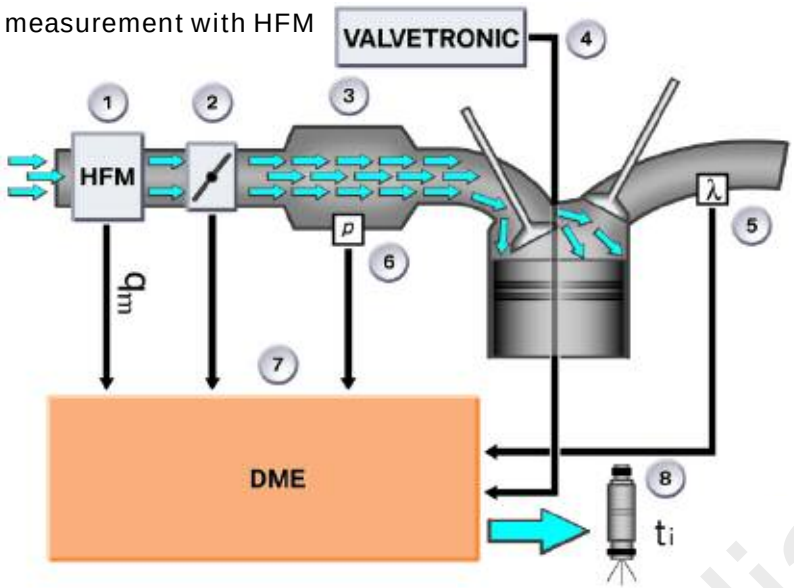

Virtual air measurement

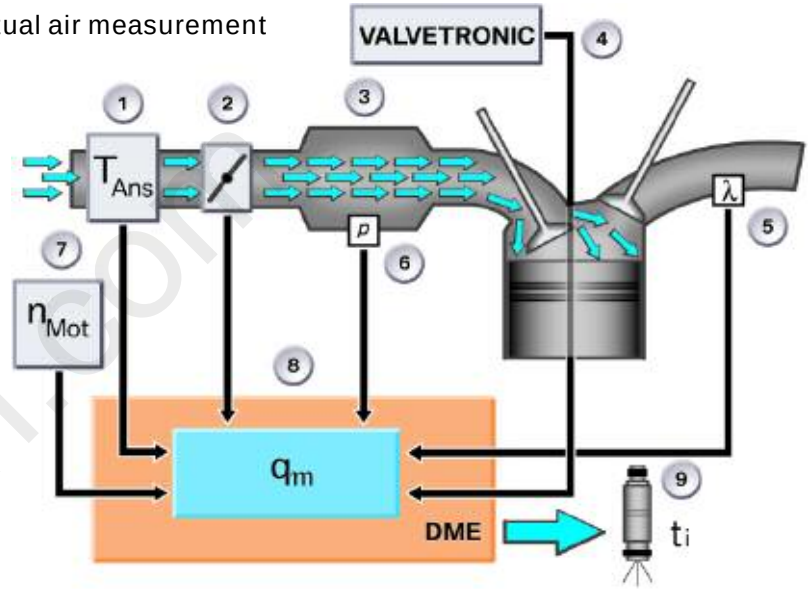

Index	Explanation	Index	Explanation
1	Measurement of intake air temperature and air mass	5	Residual O2 content in exhaust gas
2	Throttle valve position	6	Intake manifold vacuum
3	Intake manifold	7	Engine speed
4	Intake valve lift (from VVT)	8	Injection Timing

Index	Explanation	Index	Explanation
1	Intake air temperature	6	Intake manifold vacuum
2	Throttle valve position	7	Engine speed
3	Intake manifold	8	ECM (DME) with characteristic map for air mass calculation
4	Intake valve lift (VVT if equipped)	9	Injection Timing
5	Residual O2 content in exhaust (O2 sensor)		

cardiagn.com

Workshop Exercise - Hot-film Air Mass Meter

Using an instructor designated vehicle, test the circuit of the digital Hot-film air mass meter. Follow the instructions and answer the questions below:

Using the oscilloscope, test the output of the HFM on the N52KP engine. Draw the pattern on the scope graphic at the right.

Record the following information regarding the HFM signal:

	At idle	3000-5000 RPM
Signal Voltage		
Duty Cycle		
Frequency		

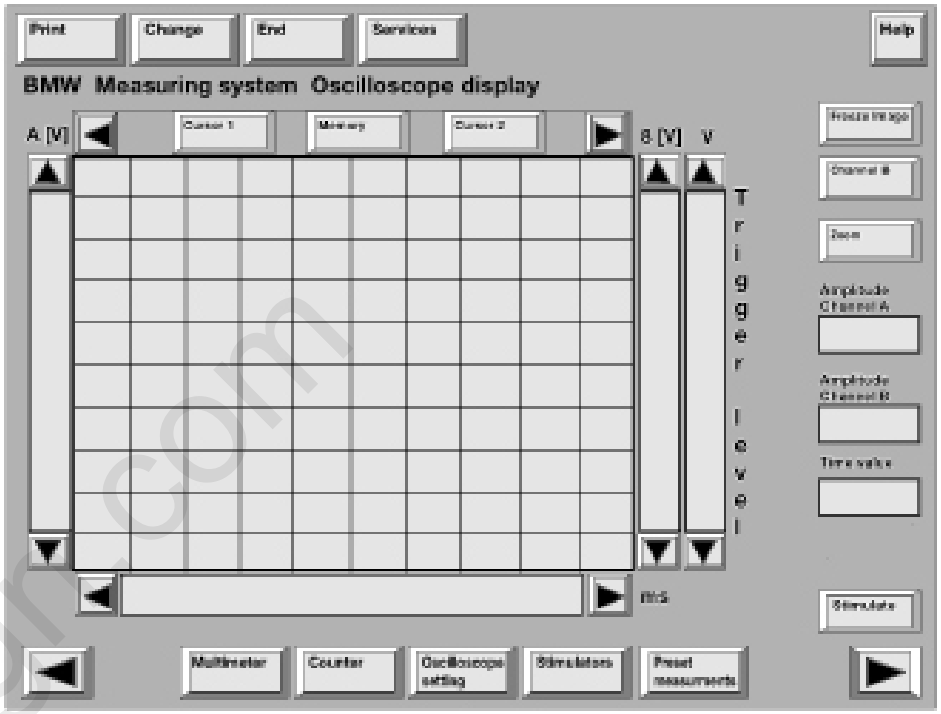

Are there any test modules for the HFM? (list them)

What information is available on the status request pages for the HFM?

On engines with the “virtual HFM” is there any status information?

Oscilloscope Settings						
	Channel A			Channel B		
Test Connection	MFK 1	MFK 2	KV	MFK 1	MFK 2	Trigger clip
Type of Measurement	AC	DC		AC	DC	
Frequency Range						
Trigger Source	Channel A	Channel B		Trigger Clip	KL1 (TD)	

cardiagn.com

Fuel Supply and Management

N52KP and N51 Fuel System

The N52KP and N51 engine continue to use the conventional “manifold injection” system carried over from the N52. The fuel supply components are also carried over with regard to the EKP module, fuel pump etc.

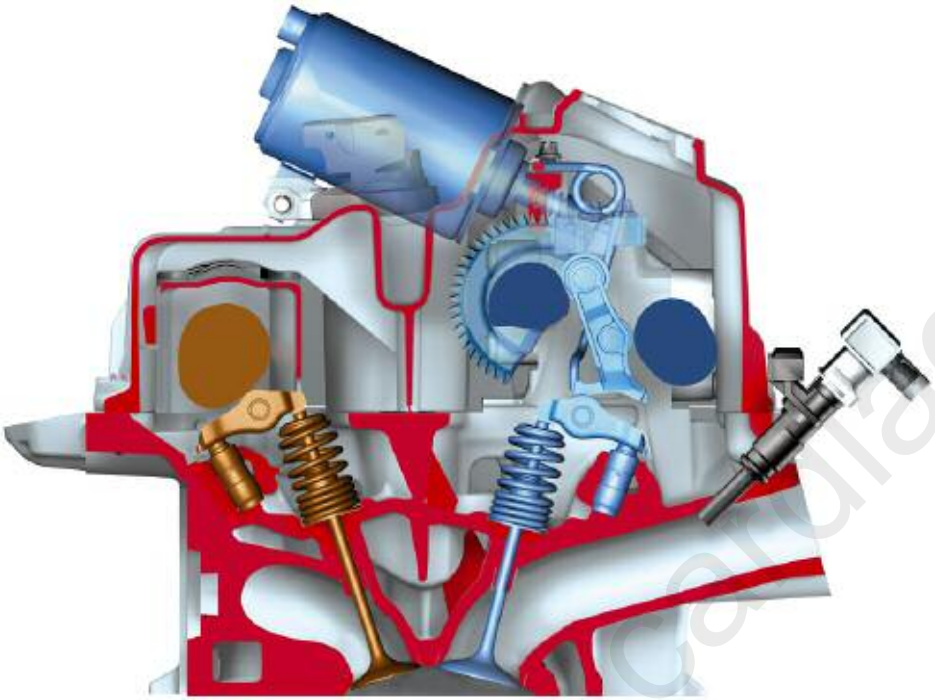

N54 Engine

The N54 engine uses the new High Precision Injection (HPI) system. The HPI system is a “direct” fuel injection system which represents the second generation “DI” system from BMW. The first generation was on the N73 engine from 2003.

The N73 engine used a “wall guided” method of injection which used a recess in the piston to aid in mixture formation. The HPI system on the N54 uses a “spray guided” process which allows the mixture to form and ignite without the aid of any “walls” (i.e piston, cylinder wall etc.).

The spray guided system allows for more efficiency by cooling the cylinder charge without excessive cooling of the associated engine components. The wall guided system cools the piston crown which reduces thermal efficiency.

The HPI system also uses the new “piezo-electric” fuel injectors which are a vital components of the spray guided process. These new injectors open in an outward direction, which forms a precise tapered spray pattern.

With the aid of high system pressure (200 bar), the HPI system is now capable of providing new levels of efficiency which were not achievable with previous manifold injection systems.

cardiagn.com

Index	Explanation	Index	Explanation
1	High-pressure line to injector (6)	6	Low-pressure sensor
2	Piezo injector	7	Fuel supply control valve
3	Fuel rail	8	Three plunger high pressure pump
4	High pressure sensor	9	High pressure line (pump to rail)
5	Feed line from in-tank pump		

HPI Function

The fuel is delivered from the fuel tank by the electric fuel pump via the feed line (5) at an “feed” pressure of 5 bar to the high pressure pump. The feed pressure is monitored by the low-pressure sensor (6). The fuel is delivered by the electric fuel pump in line with demand.

If this sensor fails, the electric fuel pump continues to run at 100 % delivery with terminal 15 ON.

The high pressure pump is driven “in-tandem” with the vacuum pump which is driven by the oil pump chain drive assembly.

The fuel is compressed in the permanently driven three-plunger high-pressure pump (8) and delivery through the high-pressure line (9) to the rail (3). The fuel accumulated under pressure in the rail in this way is distributed via the high-pressure lines (1) to the piezo injectors (2).

The required fuel delivery pressure is determined by the engine-management system as a function of engine load and engine speed. The pressure level reached is recorded by the high-pressure sensor (4) and communicated to the engine control unit.

Control is effected by the fuel-supply control valve (7) by way of a setpoint/actual-value adjustment of the rail pressure. Configuration of the pressure is geared towards best possible consumption and smooth running of the N54 engine. 200 bar is required only at high load and low engine speed.

cardiagn.com

High Pressure Pump Function and Design

The fuel is delivered via the supply passage (6) at the admission pressure generated by the electric fuel pump to the high-pressure pump. From there, the fuel is directed via the fuel supply control valve (4) and the low-pressure non-return valve (2) into the fuel chamber (14) of the plunger-and-barrel assembly. The fuel is placed under pressure in this plunger-and-barrel assembly and delivered via the high pressure non-return valve (9) to the high pressure port (7).

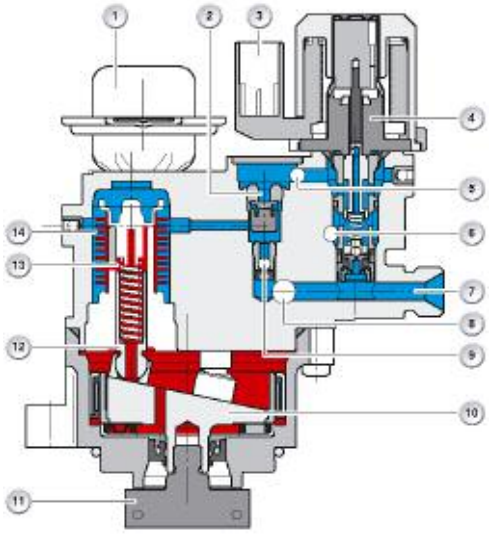

Index	Explanation	Index	Explanation
1	Thermal compensator	8	Supply passage, pressure limiting valve
2	Low pressure non-return valve (check valve)	9	High pressure non-return valve (x 3)
3	Connection to engine management	10	Pendulum disc
4	Fuel supply control valve	11	Drive flange, high pressure pump
5	Return, pressure limiting valve	12	Plunger (x 3)
6	Supply from electric fuel pump (in-tank)	13	Oil filling, high pressure pump
7	High pressure port to fuel rail	14	Fuel chamber (x 3)

The high-pressure pump is connected with the vacuum pump via the drive flange (11) and is thus also driven by the chain drive, i.e. as soon as the engine is running, the three plungers (12) are permanently set into up-and-down motion via the pendulum disc (10).

Fuel therefore continues to be pressurized for as long as new fuel is supplied to the high-pressure pump via the fuel-supply control valve (4). The fuel-supply control valve is activated by means of the engine management connection (3) and thereby admits the quantity of fuel required.

Pressure control is effected via the fuel-supply control valve by opening and closing of the fuel supply channel. The maximum pressure in the high-pressure area is limited to 245 bar.

If excessive pressure is encountered, the high-pressure circuit is relieved by a pressure-limiting valve via the ports (8 and 5) leading to the low-pressure area.

This is possible without any problems because of the non-compressibility of the fuel, i.e. the fuel does not change in volume in response to a change in pressure. The pressure peak created is compensated for by the liquid volume in the low-pressure area.

Volume changes caused by temperature changes are compensated for by the thermal compensator (1), which is connected with the pump oil filling.

cardiagn.com

Pressure Generation in High-pressure Pump

The plunger (2) driven by the pendulum disc presses oil (red) into the metal diaphragm (1) on its upward travel. The resulting change in volume of the metal diaphragm thereby reduces the available space in the fuel chamber. The fuel thereby placed under pressure (blue) is forced into the rail.

The fuel-supply control valve controls the fuel pressure in the rail. It is activated by the engine management system via a pulse-width modulated (PWM) signal.

Depending on the activation signal, a restrictor cross-section of varying size is opened and the fuel-mass flow required for the respective load point is set. There is also the possibility of reducing the pressure in the rail.

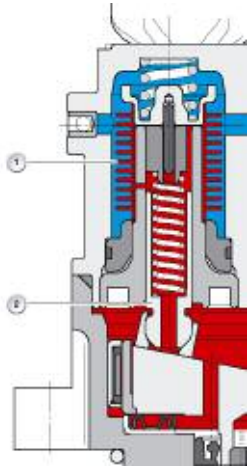

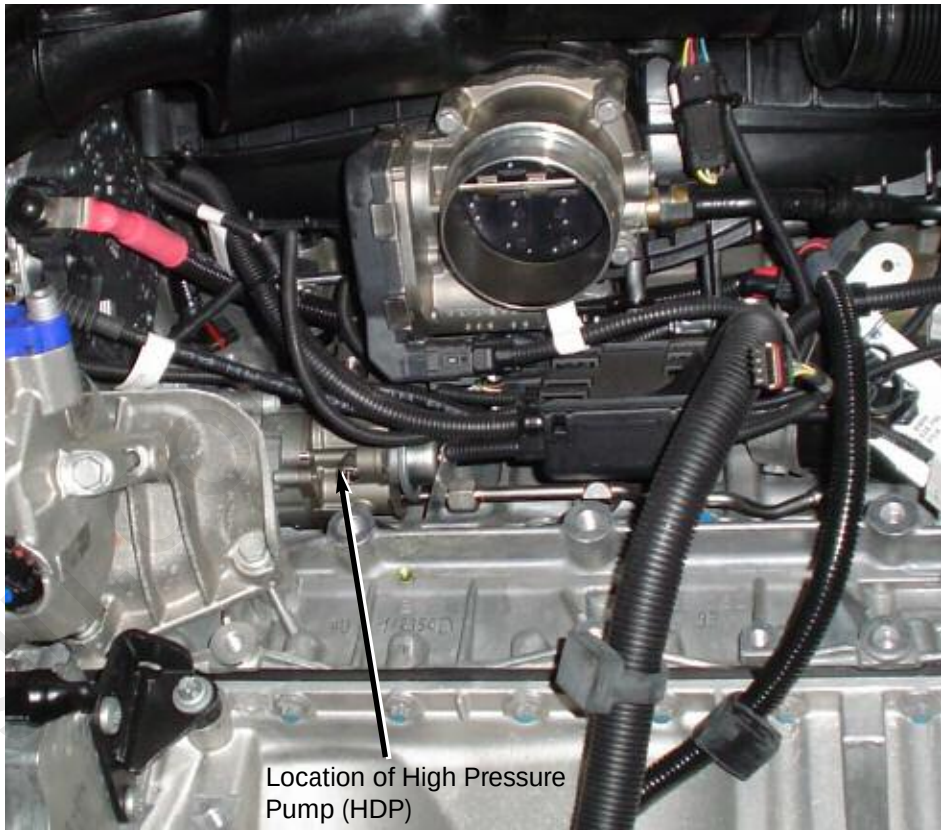

Index	Explanation
Red	Oil filling
Blue	Fuel
1	Metal diaphragm
2	Plunger

cardiagn

Limp-home Mode

If a fault is diagnosed in the system, such as e.g. failure of the high-pressure sensor, the fuel-supply control valve is de-energized; the fuel then flows via a so-called bypass into the rail.

In the event of HPI limp-home mode, turbocharging is deactivated by an opening of the wastegate valves.

Causes of HPI limp-home mode can be:

- Implausible high-pressure sensor values
- Failure of the fuel-supply control valve
- Leakage in the high-pressure system
- Failure of the high-pressure pump
- Failure of the high-pressure sensor

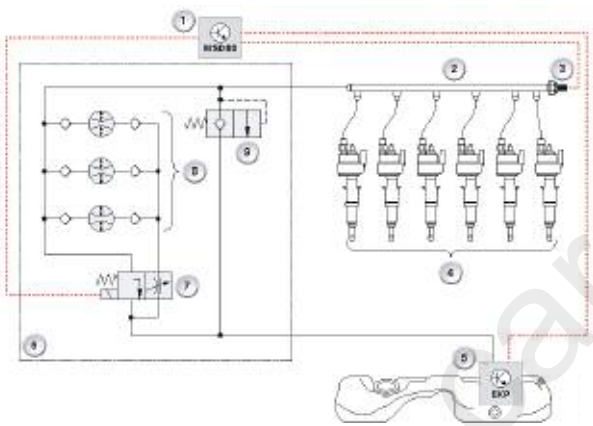

Index	Explanation	Index	Explanation
1	Engine control module (MSD80)	6	High-pressure pump
2	Fuel rail	7	Fuel supply control valve
3	High pressure sensor	8	High pressure pump with non-return valves
4	Piezo injectors	9	Pressure liming valve with bypass
5	Electric fuel pump		

Fuel System Safety

Working on this fuel system is only permitted after the engine has cooled down. The coolant temperature must not exceed 40 °C. This must be observed without fail because otherwise there is a danger of fuel sprayback on account of the residual pressure in the high-pressure system.

When working on the high-pressure fuel system, take particular care to ensure conditions of absolute cleanliness and follow the work sequences described in the repair instructions. Even the tiniest contaminant's and damage to the screw connections on the high-pressure lines can cause leaks.

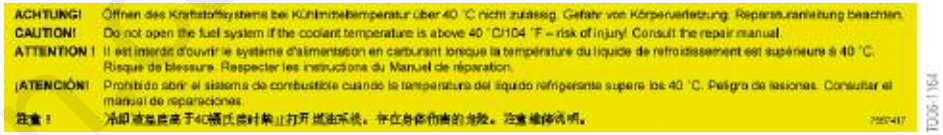

Do not attempt to open any high pressure fuel lines on the HPI system until the coolant temperature is below 40 degrees Celsius (approximately 104 degrees Fahrenheit)

cardiagn.com

Piezo Fuel Injectors

It is the outward-opening piezo-injector that renders possible spray-directed direct injection and thus the overall innovations of the N54 engine. Due to the fact that only this component ensures that the injected fuel spray cone remains stable, even under the prevailing influences of pressure and temperature in the combustion chamber.

This piezo-injector permits injection pressures of up to 200 bar and extremely quick opening of the nozzle needle. In this way, it is possible to inject fuel into the combustion chamber under conditions released from the power cycles limited by the valve opening times.

The piezo-injector is integrated together with the spark plug centrally between the inlet and exhaust valves in the cylinder head. This installation position prevents the cylinder walls or the piston crown from being wetted with injected fuel. A uniform formation of the homogeneous air/fuel mixture is obtained with the aid of the gas movement in the combustion chamber and a stable fuel spray cone.

The gas movement is influenced on the one hand by the geometry of the intake passages and on the other hand by the shape of the piston crown.

The injected fuel is swirled in the combustion chamber with the boost air until a homogeneous mixture is available throughout the compression space at the point of ignition.

Note: When working on the fuel system of the N54 engine, it is important to ensure that the ignition coils are not fouled by fuel. The resistance of the silicone material is significantly reduced by heavy fuel contact. This can cause secondary ignition misfires.

- Before performing any repairs to the fuel system, remove the ignition coils without fail and protect the spark-plug slot against the ingress of fuel with a cloth.
- Before refitting the piezo-injector, remove the ignition coils and ensure conditions of absolute cleanliness.
- Ignition coils heavily fouled by fuel must be replaced.

Injector Design and Function

The piezo-injector essentially consists of three sub-assemblies. The expansion of the energized piezo-element lifts the nozzle needle outwards from its valve seat. To be able to counter the different operating temperatures with comparable valve lifts, the injector has a thermal compensating element.

The nozzle needle is pressed outwards from its tapered valve seat. This opens up an annular orifice. The pressurized fuel flows through this annular orifice and forms a hollow cone, the spray angle of which is not dependent on the backpressure in the combustion chamber.

rdiagn.com

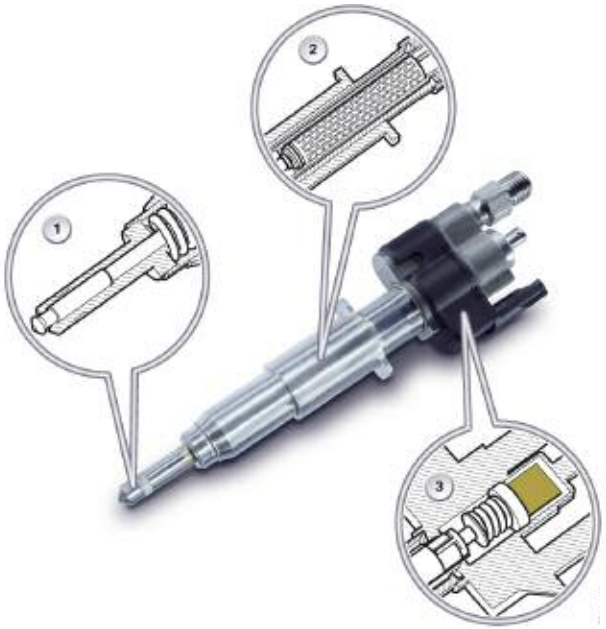

Index	Explanation
1	Outward opening nozzle needle
2	Piezo-element
3	Thermal compensator

Outward opening injector nozzle needle

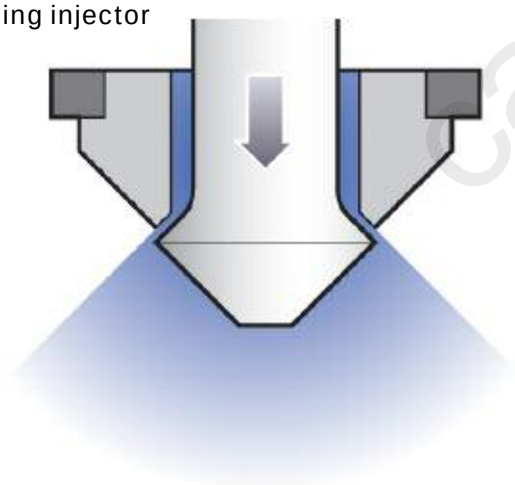

The spray cone (1) of a piezo-injector can diverge during operation (2). Due to the formation of soot inside the engine, such divergence is perfectly normal and acceptable to a certain extent.
If, however, spray divergence reaches the stage where it begins to spray the spark plug wet, the spark plug may incur damage.

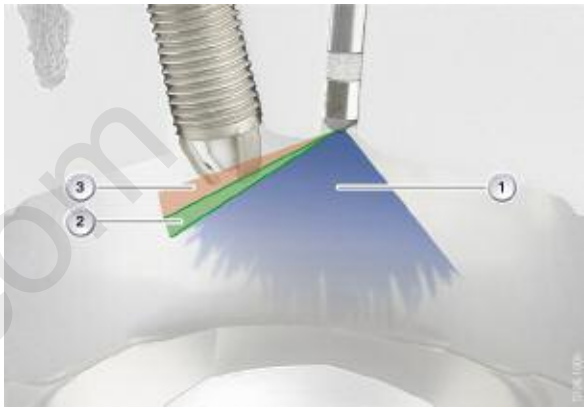

Index	Explanation
1	Ideal “spray” cone
2	Permitted divergence of spray cone
3	Non-permitted divergence of spray cone

Note: Do not attempt to clean the injectors in any way.
This may result in damage which can effect the spray pattern.
Any divergence in the spray pattern can cause damage to the spark plug or the engine itself.

Note: Replace the Teflon sealing ring when fitting and removing the piezo-injector. This also applies when an injector that has just been fitted has to be removed again after an engine start. A piezo-injector provided with a new Teflon sealing ring should be fitted as quickly as possible because the Teflon sealing ring could swell up. Please observe the repair instructions and follow without fail.

When fitting, make sure that the piezo injector is correctly seated. The hold-down element for securing the piezo-injectors must rest on both injector tabs, otherwise the necessary force is not applied to the piezo-injector.

cardiagn.com

Injection Strategy

Injection of the fuel mass required for the operating situation can take place in up to three individual injections. Which option is used in the relevant operating situation is dependent on engine load and speed. Here, the actual time resulting from the engine speed available for metering the fuel is an important framework quantity.

A special situation during the operation of any engine is the range in which a high load occurs at low engine speed, so-called "Low End Torque" operation. In this operating situation, the required fuel mass is metered to the engine in three individual injections.

This results in a highly effective mixture formation which in the final analysis has the effect of both increasing power output and saving fuel.

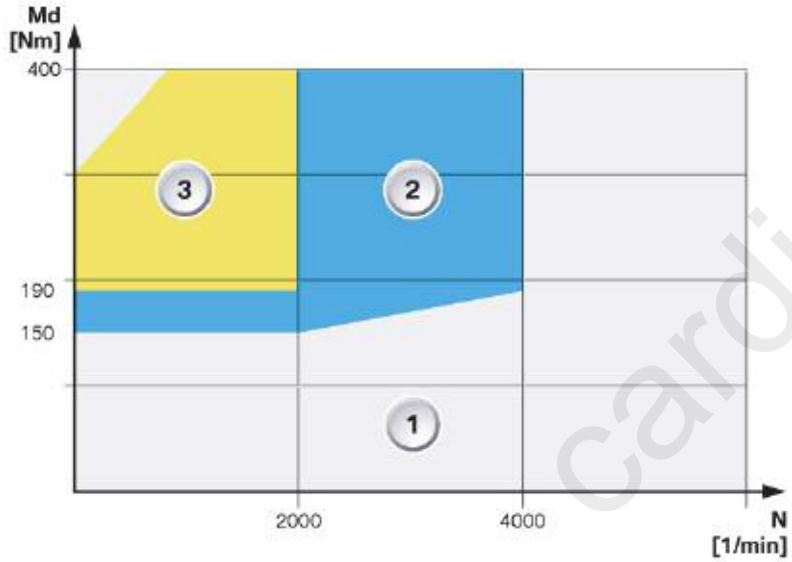

Index	Explanation
1	Single injection event
2	Double injection event
3	Triple injection event

In order to bring the catalytic converters up to operating temperature as quickly as possible, the N54 engine has a catalyst-heating mode for when the engine is started from cold. In this mode, combustion heat is intentionally introduced into the exhaust train and not used first and foremost to develop power output.

The point of ignition is moved to 30° (crankshaft degrees) after TDC. The main quantity of the required fuel is injected before TDC and mixed with the boost air. The piston is situated after TDC in its downward travel such that the air/fuel mixture is already expanding again, which reduces the ignitability of the mixture.

In order to ignite the mixture reliably, a small residual quantity of fuel is injected 25° after TDC and this guarantees an ignitable mixture at the spark plug. This small fuel quantity therefore provides for ignition of the residual charge in the combustion chamber.

This operating mode is set by the engine-management system after a maximum period of 60 seconds from engine starting but is terminated if the catalytic-converter response temperature is reached earlier.

cardiagn.com

Piezo Element

The movement of the nozzle needle in the injector is generated no longer by a solenoid coil but rather by a piezo-element.

A piezo-element is an electromechanical converter, i.e. it consists of a ceramic material which converts electrical energy directly into mechanical energy (force/travel). A familiar application is the piezo cigarette lighter - when a piezo-crystal is pressed, voltage is generated until a spark flashes over and the gas ignites.

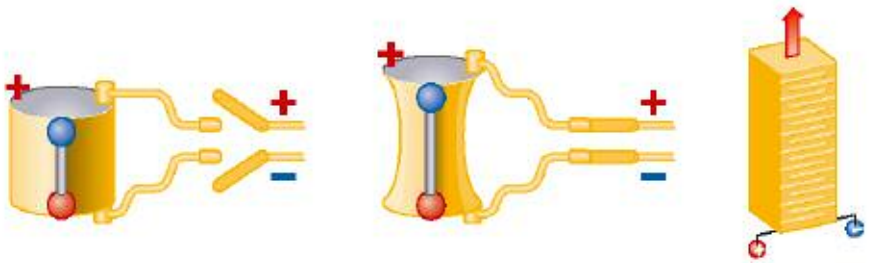

1 2 3

Index	Explanation
1	Piezo crystal - not energized
2	Piezo crystal - energized
3	Piezo element - in multiple layers (stacked)

In the case of the piezo-actuator, voltage is generated so that the crystal expands. In order to achieve greater travel, it is possible to design a piezo-element in several layers.

The actuator module consists of layers of the piezo-ceramic material connected mechanically in series and electrically in parallel. The deflection of a piezo-crystal is dependent on the applied voltage up to a maximum deflection; the higher the voltage, the greater the travel.

Injector Adjustment

When the injectors are manufactured, a multitude of measurement data is recorded at specific points in the factory. In this way, the tolerance ranges for injector-quantity adjustment are determined and specified in a six-digit number combination.

Information on the lift performance of the injector is also added for injector voltage adjustment. Injector adjustment is required because of the individual voltage demand of each piezo actuator. An allocation is made to a voltage demand category, which is included in the number combination on the injector.

These data items are transmitted to the ECM. During engine operation, these values are used to compensate for deviations in the metering and switching performance.

Note: When replacing an injector, it is absolutely essentially to carry out an injector adjustment.

cardiagn.com

Injector Control and Adaptation

The fuel mass required for the operating situation is injected by the piezo-injector into the combustion chamber. This mass can be influenced by three correcting variables:

- the rail pressure
- the injector opening time
- and the injector opening lift

The injector opening time and the injector opening lift are activated directly at the piezo injector. The opening time is controlled via the ti signal and the opening lift via the energy quantity in the activation of the piezo-injector.

Injector Adaptation

The fuel masses and injection cycles determined from the load/speed map are included in a pilot-control program map. Here, while further framework parameters are taken into consideration, the energy quantities and injector opening times required to activate the injectors are determined.

The N54 engine can be safely and reliably operated with these program-map values.

Optimization

For optimization of:

- Emission values
- Smooth running
- Fuel consumption
- Power output

the controlled variables of energy quantities and injector opening times are continuously monitored. This occurs on a bank-selective basis by way of lambda closed-loop control.

The residual oxygen in the exhaust gas is measured in each case for cylinder bank 1 and cylinder bank 2. This measurement result is compared with the values expected from the set correcting variables. The result of a deviation is that the injector opening signal is adapted. This adaptation is stored in the control unit and is therefore available for subsequent engine operation.

However, these stored values are lost when the system is flashed and must be relearned. A further adaptation of the injector activation takes place depending on time and use. This cylinder-selective adaptation involves a check of the residual-oxygen content with a conclusion as to the cylinder causing the situation. To this end, it is necessary for part of the exhaust-gas flow not to be swirled in the turbocharger. For this reason, the flap of the wastegate valve must be fully opened, i.e. swung out of the exhaust-gas flow.
This wastegate-flap position extends beyond its normal opening position in engine operation. Based on the result of this cylinder-selective monitoring, the energy quantity is adapted if necessary to activate the injectors.

Furthermore, the cylinder-selective adaptation includes if necessary an adaptation of the injector opening signal based on smooth running monitoring of the N54 engine. Overall adaptation of the injectors is limited to a 15% additional quantity.

cardiagn.com

Workshop Exercise - Fuel Injection System

Using an instructor designated vehicle, access the schematic for the fuel injector circuit and perform oscilloscope testing on one of the injectors.

Draw the scope pattern on the illustration at the right.

What is unique about this injector pattern in comparison with a conventional fuel injector pattern?

With regard to the fuel injector circuit, what is different about the power and ground connections to the fuel injector?

What is the approximate voltage of the fuel injector signal?

Is it possible to see multiple injection events on the scope? (explain)

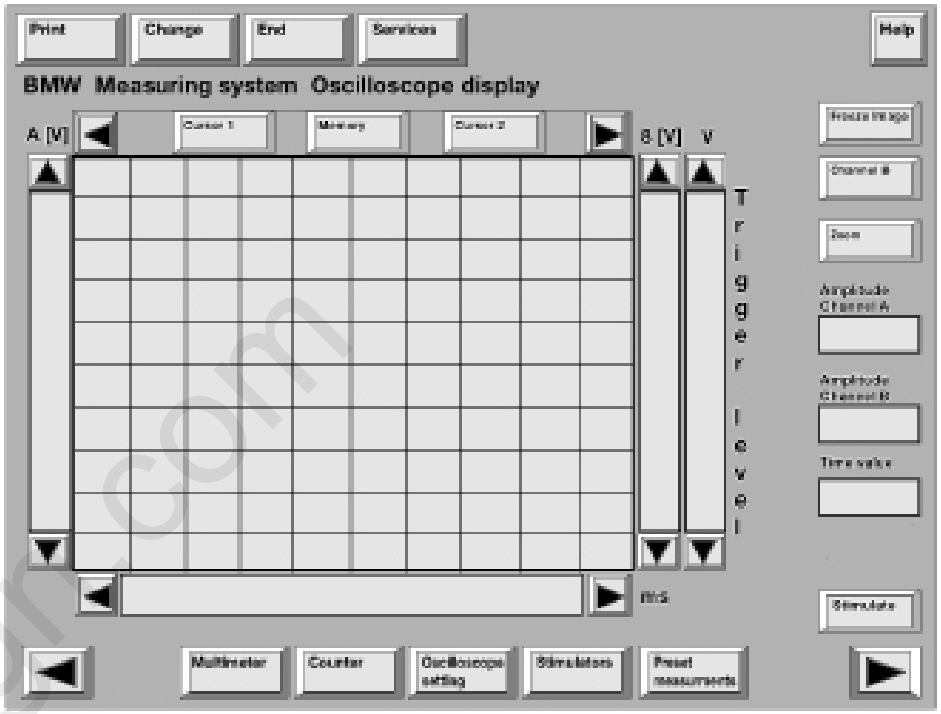

Oscilloscope Settings						
	Channel A			Channel B		
Test Connection	MFK 1	MFK 2	KV	MFK 1	MFK 2	Trigger clip
Type of Measurement	AC	DC		AC	DC	
Frequency Range						
Trigger Source	Channel A	Channel B		Trigger Clip	KL1 (TD)	

cardiagn.com

Workshop Exercise - Fuel Injection System

Access the test module for the "injector adjustment" and follow through the test module.

Describe the path to access the test module:

_____

_____

_____

When should the injector adjustment be performed?

_____

_____

_____

Where can the numbers for the injector adjustment be found?

_____

_____

_____

_____

cardiagn.com

Workshop Exercise - HPI Injection

Date:	Model:	Chassis:	Prod Date:	DISplus/GT-1 Software:

Using the BMW diagnostic equipment, identify any available diagnostic options that can be used to troubleshoot the listed functions or components and mark each category accordingly.	Component Activation	Status Request	Test Plan	Signal Measurement	Notes/comments: (example: pin and connector assignments, "Function Selection" Path, Notes on Test Plans)	Service Function
Function/System/Component	Diagnosis Options				Additional Information	Purpose
Injection control/fuel injectors						
Low pressure fuel system/ In-tank fuel pump						
Low pressure fuel system/ Pressure sensor						
High pressure fuel system/Pressure control valve						
High pressure fuel system/Pressure sensor						

Can injectors be interchanged from one cylinder to another for testing purposes? _____

What requirements would be necessary in order to accomplish this? _____

or

Why is this not recommended? _____

Component	Operating Condition				
		Start	Cold Idle	Warm Idle	High Load
High pressure control valve	Volts				
	Hz				
	Duty Cycle				
Rail pressure sensor	Volts				
	Hz				
	Cycle				
Inlet pressure sensor	Volts				
	Hz				
	Duty Cycle				

cardiagn.com

NOTES PAGE

carmagn.com

Ignition Management

Most of the ignition system components have remained the same for all NG6 engines for 2007. There are some minor changes to the ignition coils that apply to all versions. The coils have been optimized for more durability.

Spark Plugs

The spark plugs for the N51 and N52KP remain the same as N52. However, the N54 uses a completely new spark plug from Bosch. The spark plug design consists of a 12mm thread which contrasts from the 14mm design on the N52 which prevents any possibility of improper installation.

The hex on the spark plug is also a 12 point design which requires a special tool. The tool (socket) has a “thinwall” design to facilitate access in the confined area of the N54 cylinder head.

Spark Plug Diagnosis (N54)

Due to the proximity of the spark plug to the fuel injector nozzle, any divergence in the fuel spray may cause possible spark plug damage. This makes spark plug diagnosis an important part of N54 service concerns. Information gained by the spark plug diagnosis may indicate possible fuel injector faults. Spark plug replacement interval has been reduced to 45,000 miles for the N54.

The illustrations below can be used to assist in diagnosis:

Spark plug showing normal wear pattern for low mileage

Spark plug showing normal wear pattern for high mileage

Spark plug showing abnormal wear pattern - look for possible fuel spray diversion

Spark plug showing abnormal wear pattern - look for possible fuel spray diversion

cardiagn.com

Emissions Management

The N54 and N52KP meet ULEV II requirements for 2007. There are not many changes to the emission systems on these engines. The N54 engine has 2 underbody catalysts in addition to the "near engine" catalysts already in use from the N52.

The N51 engine, however, is a SULEV II compliant engine which meets the 2007 requirements. In addition to the 5 existing SULEV states of California, New York, Maine, Massachusetts, and Vermont - four states have been added for 2007. These states include, Connecticut, Rhode Island, Oregon and Washington State.

The N51 emissions measures include:

- Secondary Air System with mini-HFM
- Radiator with "Prem-air" coating
- Lower compression ratio (10:1) via modified combustion chamber and pistons
- Underbody catalyst in addition to "near engine" catalyst
- Activated carbon air filter in air filter housing
- Steel fuel lines with threaded fittings and sealed fuel tank
- Crankcase ventilation system integrated into cylinder head cover
- Purge system piping made from optimized plastic

Note: The SULEV II information above is only preliminary and is accurate as of 8/06. Additional information will be released as it becomes available.

cardiagn.com

Performance Controls

Cooling System

The cooling system of the N54 engine consists of a radiator circuit and an isolated oil cooling circuit. The fact that there is an isolated oil-cooling circuit ensures that heat is not introduced via the engine oil into the engine's coolant system.

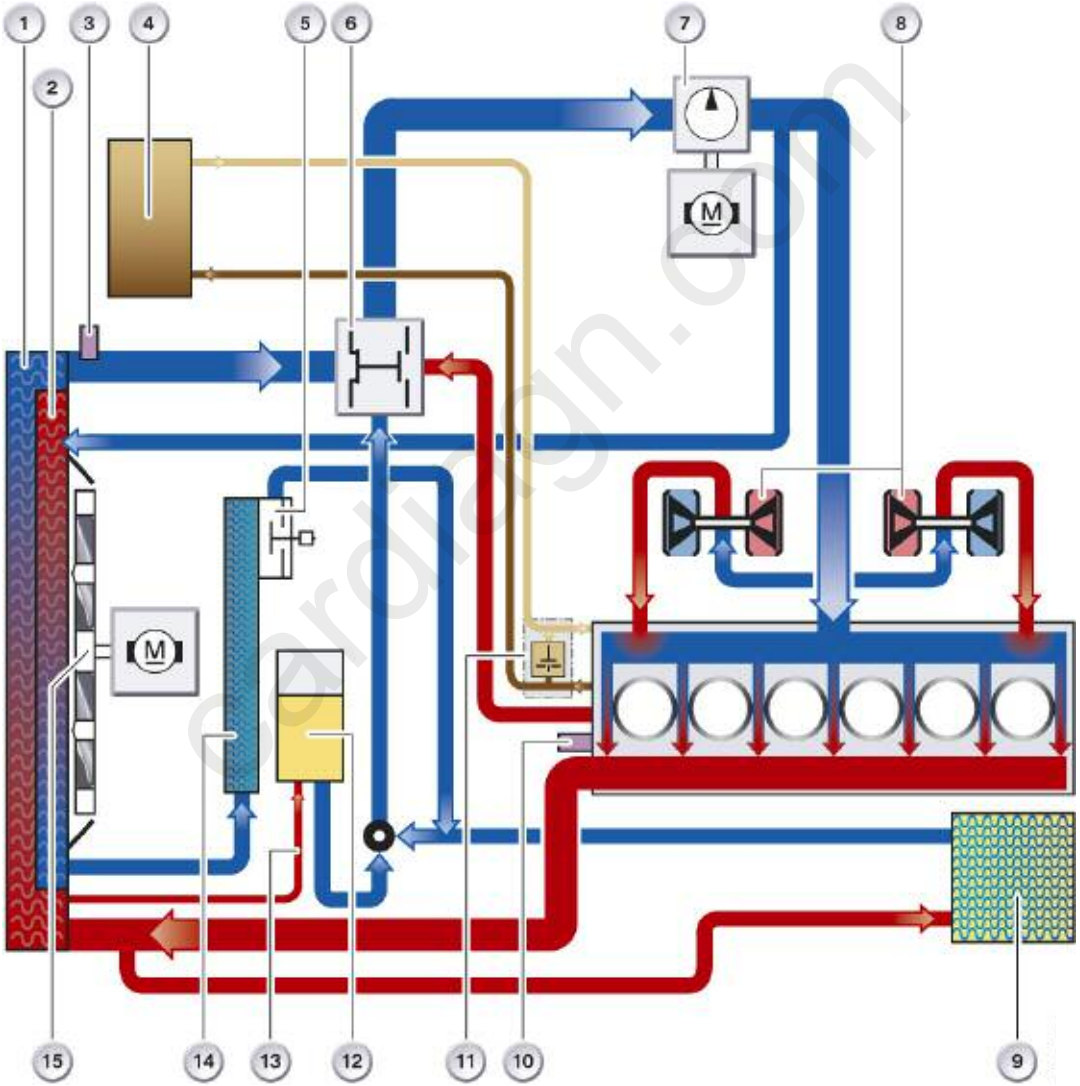

There is a significantly greater quantity of heat on account of this engine's increased power of 75.5 kW/l in comparison with other 3-liter spark-ignition engines.

This boundary condition is satisfied by the engine cooling system with its increased performance. This increase in power was to be realized in spite of some factors less advantageous to cooling.

Factors to be mentioned here are:

- Approximately 15% less flow area is available on account of the intercooler located below the radiator.
- The already small amount of space provided by the engine compartment is further limited by the accommodation of further components.
- Because the exhaust turbochargers are cooled by the coolant, an additional quantity of heat is introduced into the system via these turbochargers.

Measures for increasing cooling-system performance:

- Coolant pump with increased power - 400 W/9000 l/h
- Separation of water and engine-oil cooling
- Radiator with increased power
- Electric fan with increased power 600W for all gearbox variants

The structure of the coolant circuit is the same as that of the N52 engine. The engine is flushed through with coolant in accordance with the cross-flow concept. Cooling output can be influenced as a function of load by activating the following components:

- Electric fan
- Electric coolant pump
- Map thermostat

Index	Explanation	Index	Explanation
1	Radiator	9	Heat exchanger
2	Gear-box oil cooler	10	Outlet temperature sensor, cylinder head
3	Outlet temperature sensor	11	Thermostat, engine oil cooler
4	Engine oil cooler	12	Coolant expansion tank
5	Thermostat for gearbox oil cooler	13	Vent line
6	Map thermostat	14	Gearbox oil cooler
7	Electric coolant pump	15	Fan
8	Exhaust turbocharger		

It is also possible that an N54 engine equipped with an automatic gearbox to utilize the lower area of the radiator to cool the gearbox by means of the gearbox oil cooler. This is achieved as in the N52 engine with control sleeves, which are introduced into the radiator tank.

Engine-oil Cooling

The N54 engine is equipped with a high-performance engine oil cooler. The pendulum slide pump delivers the oil from the oil sump to the oil filter. A thermostat flanged to the oil filter housing admits the oil to the engine-oil cooler. The engine oil cooler is located in the right wheel arch in the E92. The thermostat can reduce the resistance opposing the oil by opening the bypass line between the feed and return lines of the engine oil cooler. This ensures that the engine warms up safely and quickly.

cardiagn.com

Radiator

Design measures have been used to increase the performance of the radiator itself. The performance of a radiator is dependent on its radiation surface. However, the intercooler location had to be underneath the radiator, and this meant that is was necessary to compensate for the smaller flow area available.

Compared with the N52 engine, the radiator used in the N54 engine has a block depth which has been increased to 32 mm. In addition, the water pipes are situated closer together than in previously used radiators. The upshot of this is an increase in the utilizable radiation surface.

Electric Coolant Pump

The coolant pump of the N54 engine is an electrically driven centrifugal pump with a power output of 400W and a maximum flow rate of 9000 l/h. This represents a significant increase in power of the electric coolant pump used in the N52 engine, which has a power output of 200 W and a maximum flow rate of 7000 l/h.

The power of the electric wet-rotor motor is electronically controlled by the electronic module (3) in the pump. The electronic module is connected via the bit-serial data interface (BSD) to the MSD80 engine control unit.

The engine control unit uses the engine load, the operating mode and the data from the temperature sensors to calculate the required cooling output.

Based on this data, the engine control unit issues the corresponding command to the electric coolant pump. The electric coolant pump regulates its speed in accordance with this command.

The system coolant flows through the motor of the coolant pump, thus cooling both the motor as well as the electronic module. The coolant lubricates the bearings of the electric coolant pump.

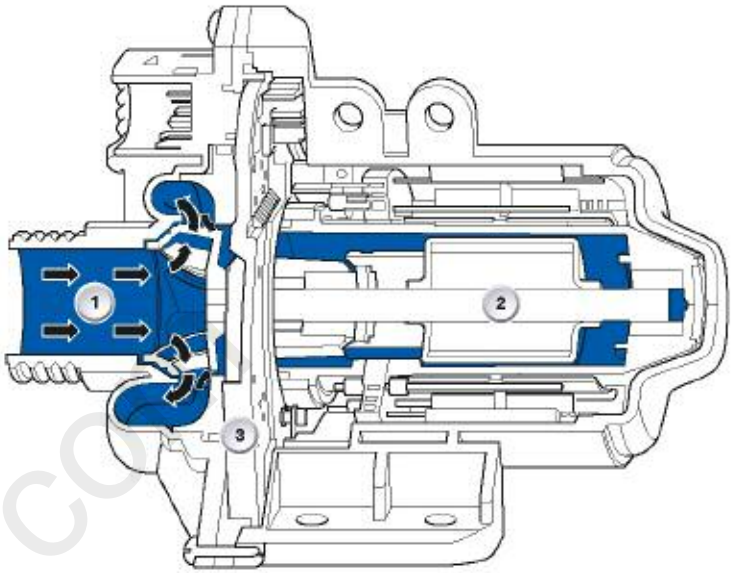

Index	Explanation
1	Pump
2	Pump motor
3	Electric Water Pump module

Note: The same rules apply to all electric coolant pumps. The pump must be filled with coolant when removed for service to prevent any corrosion. Also, the pump impeller must be turned by hand before installation to ensure the pump is not seized.

cardiagn.com

NOTES PAGE

cardiagn.com

Classroom Exercise - Review Questions

1. Complete the chart by checking the correct engine which applies to the listed component or system:

Component/System	N52	N52KP	N51	N54
Piezo-electric fuel injectors (example)				X
Connecting rod bolts - M9				
Valvetronic				
Crankcase Ventilation Valve				
Secondary Air System				
3-Stage DISA Intake manifold				
EKP Module				
Cylinder head gasket with sealing lip				
Electric Water Pump - 200 Watt				
Electric Water Pump - 400 Watt				
HPI Injection				
Forged Steel Crankshaft				
Bi-VANOS				
Plastic Valve Cover				
Crankcase Ventilation System - “2-Mode”				
All Aluminum Alloy Crankcase				
Parallel Bi-Turbocharging				
Digital HFM				
Manifold Injection				
5 mm intake valve stem				

cardiagn.com

Classroom Exercise - Review Questions

2. With regard to the N54 engine, circle the TRUE statements and cross out the statements which are NOT true:

- The HPI injection system is “spray guided”
- The piezo-injectors are “ground controlled”
- The fuel volume from the injectors is determined by the amount of injector opening
- The “blow-off” valves are controlled electrically by the DME
- The load control on the N54 is controlled by the throttle valve and the fuel injectors
- In deceleration mode, the crankcase blow-by gases are directed to the intake manifold directly
- The injection pressure is approximately 200 bar
- The HDP pump is driven from a additional lobe on the exhaust camshaft
- The MSD80 engine management system uses an idle control valve to regulate idle speed on the N54
- Both wastegates are open at idle
- The compression ratio on the N54 is 10.2 to 1
- The HDP pump is a “vane-type” pump
- The piezo injectors allow multiple injection events
- The crankcase ventilation system on the N54 has cyclone separators integrated into the cylinder head cover

3. Match the picture of the special tool with the purpose. Place the letter of the tool next to the description provided.

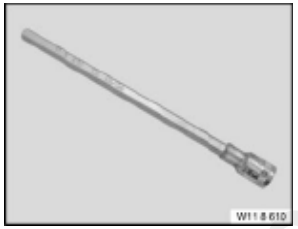

A.

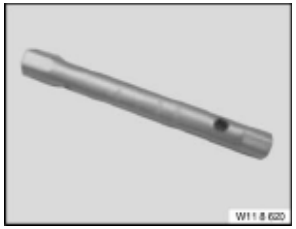

B.

C.

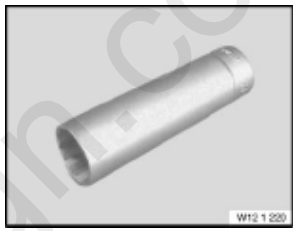

D.

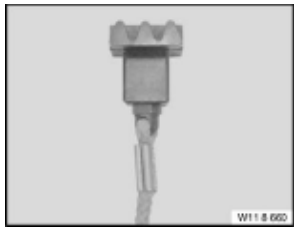

E.

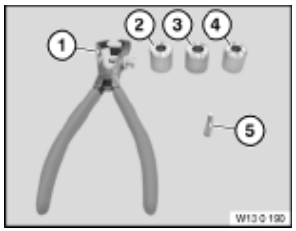

F.

- ☐ 12 point, thinwall spark plug socket
- ☐ For locking flywheel in place
- ☐ Used to access bolts to remove HDP pump
- ☐ For removing seized injectors
- ☐ To remove and install injector o-rings
- ☐ Removes long stud bolts on plastic valve covers

cardiagn.com