RX400h

Hybrid 2006 Model

Emergency Response Guide

FOREWORD

In October 2006, Lexus released the Lexus RX400h petrol-electric hybrid vehicle in Australia. Except where noted in this guide, basic vehicle systems and features for the RX400h are the same as those on the conventional, non-hybrid, Lexus RX330/350. To educate and assist emergency responders in the safe handling of the RX400h hybrid technology, Lexus published this RX400h Emergency Response Guide.

High voltage electricity powers the electric motors, generator, inverter/converter, and power steering. All other automotive electrical devices such as the headlights, radio, and gauges are powered from a separate 12-Volt battery. Numerous safeguards have been designed into the RX400h to help ensure the high voltage, approximately 288-Volt, Nickel Metal Hydride (NiMH) Hybrid Vehicle (HV) battery pack is kept safe and secure in an accident.

The RX400h utilises the following electrical systems:

- Maximum 650-Volts AC
- Nominal 288-Volts DC
- Nominal 42-Volts DC
- Nominal 12-Volts DC

RX400h Features:

- Adoption of *Hybrid Synergy Drive* as the name for the Lexus Petrol - Electric Hybrid System.
- *Hybrid Synergy Drive* includes a boost converter in the inverter assembly that boosts to 650-Volts the available voltage to the electric motors.
- The high voltage hybrid vehicle battery pack rated at 288-Volts.
- A high voltage electric motor driven air conditioning compressor rated at 288-Volts.
- A high voltage Electric Power Steering (EPS) assist motor rated at 42-Volts.
- Body electrical system rated at 12-Volts negative chassis ground.
- RX400h is only availbale in Australia as a four wheel drive (4WD).
- 4WD models include an additional 650-Volt electric motor to drive the rear wheels.
- Supplemental Restraint System (SRS) - dual stage frontal airbags, driver knee airbag, front seat mounted side airbags, side curtain airbags, and front seat belt pretensioners.

High voltage electrical safety is an important factor in the emergency handling of the RX400h *Hybrid Synergy Drive* system. It is important to recognise and understand the disabling procedures and warnings throughout the guide.

Additional topics contained in the guide include:

- Lexus RX400h identification.
- Major *Hybrid Synergy Drive* component locations and descriptions.
- Extrication, fire, recovery, and additional emergency response information.
- Roadside assistance information.

By following the information in this guide, emergency responders should be able to safely perform a rescue involving the Lexus RX400h hybrid vehicle.

2006 RX400h

TABLE OF CONTENTS

About the RX400h 1

RX400h Identification 2

Hybrid Synergy Drive Component Locations and Descriptions 5

Hybrid Synergy Drive Operation 6

Hybrid Vehicle (HV) Battery Pack and Auxiliary Battery 7

High Voltage Safety 9

SRS Airbags and Seat Belt Pretensioners 10

Emergency Response 11

- Extrication 11
- Fire 14
- Overhaul 15
- Recovery/Recycling of the NiMH HV Battery Pack 16
- Spills 16
- First Aid 17
- Submersion 17

Roadside Assistance 18

Product Safety Data Sheet 20

ABOUT THE RX400h

The RX400h sedan is the first 4WD petrol-electric hybrid vehicle for Lexus in Australia. *Hybrid Synergy Drive* means that the vehicle contains a petrol engine and an electric motor for power. Two energy sources are stored on board the vehicle:

1. Petrol stored in the fuel tank for the petrol engine.
2. Electricity stored in a high voltage Hybrid Vehicle (HV) battery pack for the electric motor.

The result of combining these two power sources is improved fuel economy and reduced emissions. The petrol engine also powers an electric generator to recharge the battery pack; unlike a pure all electric vehicle, the RX400h never needs to be recharged from an external electric power source.

Depending on the driving conditions one or both sources are used to power the vehicle.
The following illustration demonstrates how the RX400h operates in various driving modes.

❶ During light acceleration at low speeds, the vehicle is powered by the electric motor. The petrol engine is shut off.

❷ During normal driving, the vehicle is powered mainly by the petrol engine. The petrol engine also powers the generator to recharge the battery pack.

❸ During full acceleration, such as climbing a hill, both the petrol engine and the electric motor power the vehicle.

❹ During deceleration, such as when braking, the vehicle regenerates the kinetic energy from the rear wheels to produce electricity that recharges the battery pack.

❺ While the vehicle is stopped, the petrol engine and electric motor are off, however the vehicle remains on and operational.

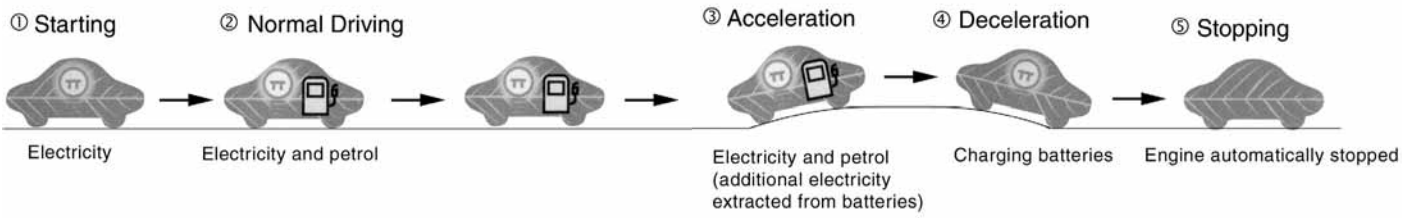

RX400h IDENTIFICATION

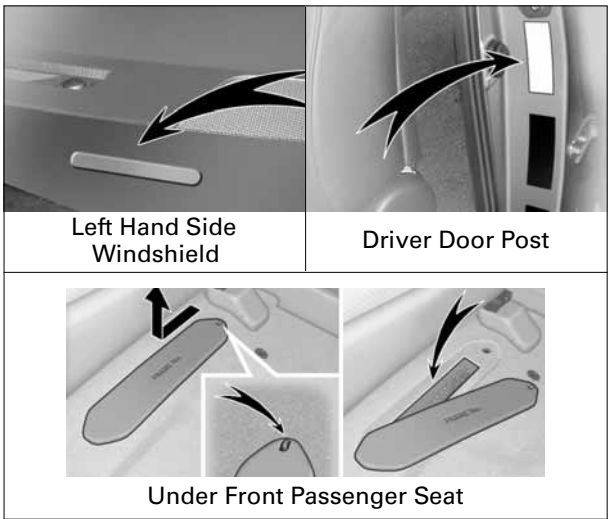

VIN Plate Locations

In appearance, the 2006 RX400h is nearly identical to the conventional, non-hybrid Lexus RX 330/350. The RX400h is a 5-door Luxury Utility Vehicle. Exterior, interior, and engine compartment illustrations are provided to assist in identification.

The alphanumeric 17 character Vehicle Identification Number (VIN) is provided in the front windshield cowl, driver door post, and under the front passenger seat.

Example VIN: JTJHW31U850011201 (4WD)

An RX400h is identified by the first 6 alphanumeric characters; **JTJHW3 (4WD).**

Exterior

❶ LEXUS RX400h logos on the rear hatchback door.

❷ Petrol fuel filler door located on the passenger side rear quarter panel.

Exterior Front View

Exterior Rear View

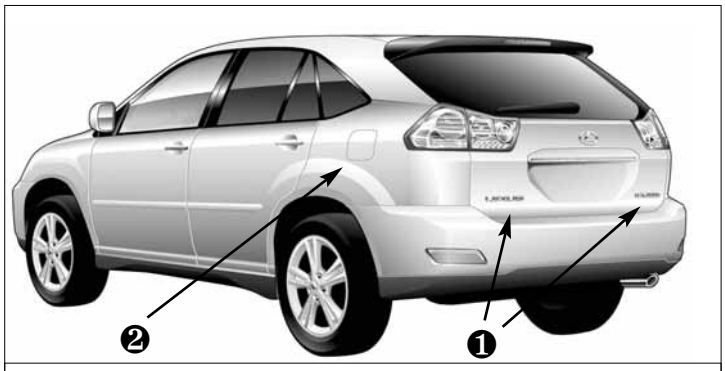

Exterior Rear and Passenger Side View

Exterior Driver Side View

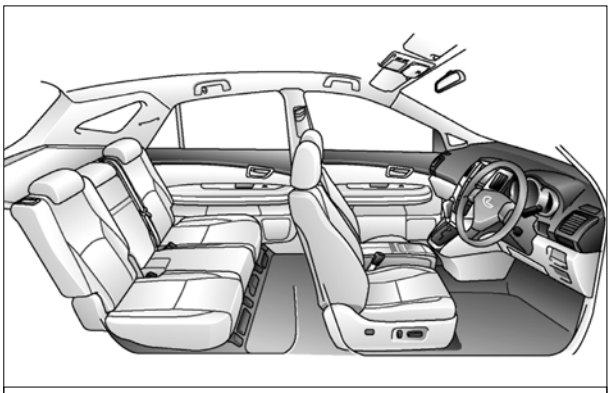

Interior View

Interior

❸ The instrument cluster (speedometer, fuel gauge, warning lights) located in the dash behind the steering wheel, is different than the one on the conventional, non-hybrid RX330/350.

❹ In place of a tachometer, a power meter showing kW output is used.

NOTE:
If the vehicle is shut off, the instrument cluster gauges will be "blacked out," not illuminated.

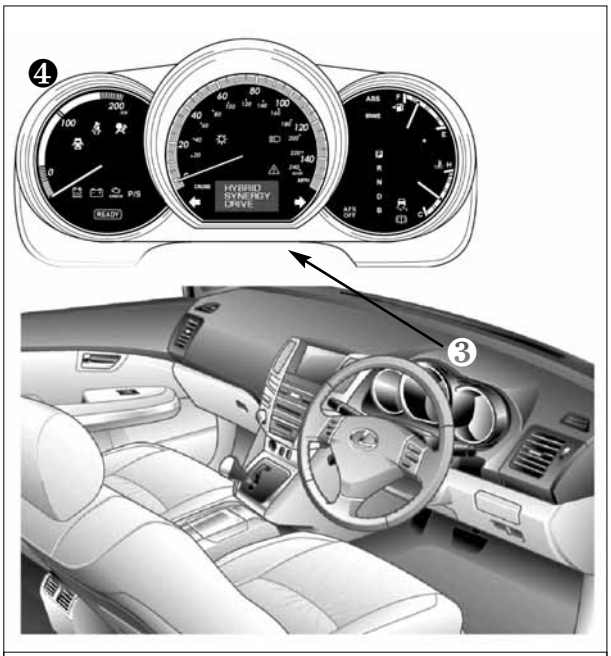

Instrument Cluster View

Engine Compartment

❺ 3.3- litre V6 aluminum alloy petrol engine.

❻ High voltage inverter/converter assembly with logos on the cover.

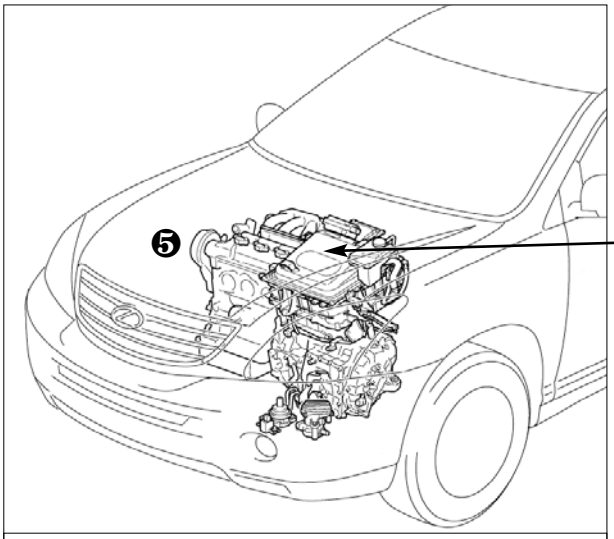

Engine Compartment View

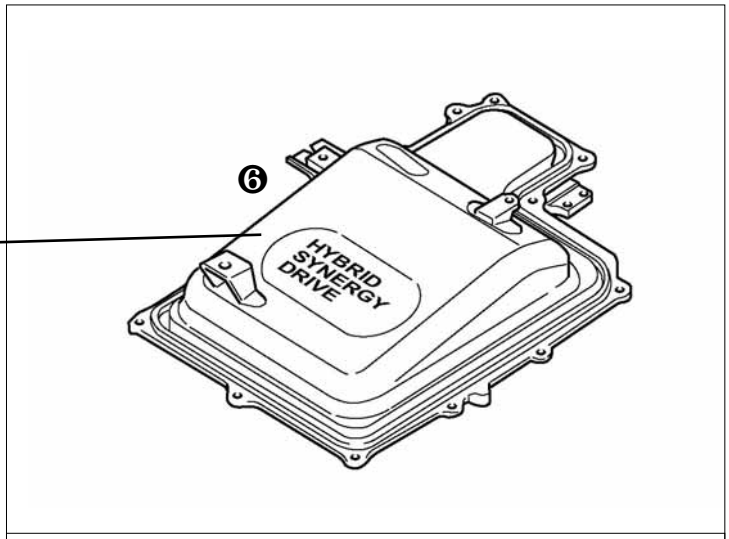

Logos on Cover

HYBRID SYNERGY DRIVE COMPONENT LOCATIONS AND DESCRIPTIONS

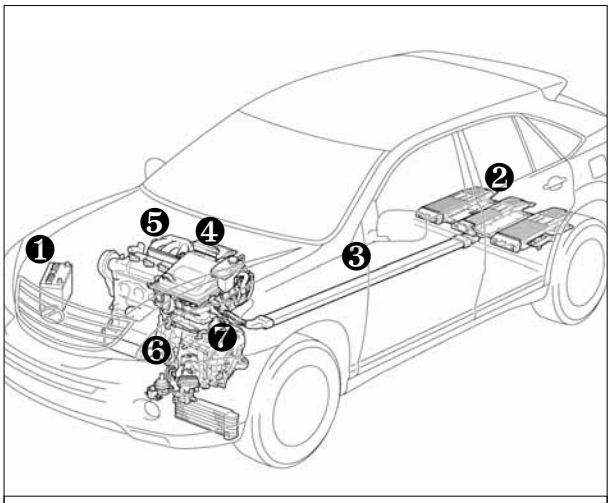

Hybrid Synergy Drive Components

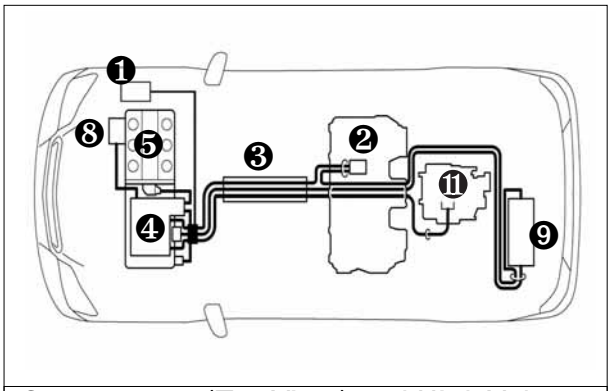

Components (Top View) and High Voltage Power Cables

COMPONENT	LOCATION	DESCRIPTION
12-Volt ❶ Auxiliary Battery	Engine Compartment	A lead-acid battery powera all low voltage electrical equipment.
Hybrid ❷ Vehicle (HV) Battery Pack	Cabin Area, Mounted to Cross Member and behind Rear Seat	288-Volt Nickel Metal Hydride (NiMH) battery pack consisting of 30 low voltage (9.6-Volt) modules connected in series.
Power ❸ Cables	Under Carriage and Engine Compartment	Orange coloured power supply cables carry high-voltage Direct Current (DC) between the HV battery pack, inverter/converter, and A/C compressor. These cables also carry 3-phase Alternating Current (AC) between the inverter/ converter, motor, and generator.
Inverter/ Converter ❹	Engine Compartment	Boosts and inverts the high voltage electricity from the HV battery pack to 3-phase AC electricity that drives the electric motor. The inverter/ converter also converts AC electricity from the electric generator and electric motor (regenerative braking) to DC that recharges the HV battery pack.
Petrol ❺ Engine	Engine Compartment	Provides two functions: 1) powers vehicle; 2) powers generator to recharge the HV battery pack. The engine is started and stopped under control of the vehicle computer.
Front ❻ Electric Motor	Engine Compartment	3-phase high voltage AC permanent magnet electric motor contained in the front transaxle. Used to power the front wheels.
Electric ❼ Generator	Engine Compartment	3-phase high voltage AC generator contained in the front transaxle. Used to recharge the HV battery pack.

HYBRID SYNERGY DRIVE COMPONENT LOCATIONS AND DESCRIPTIONS

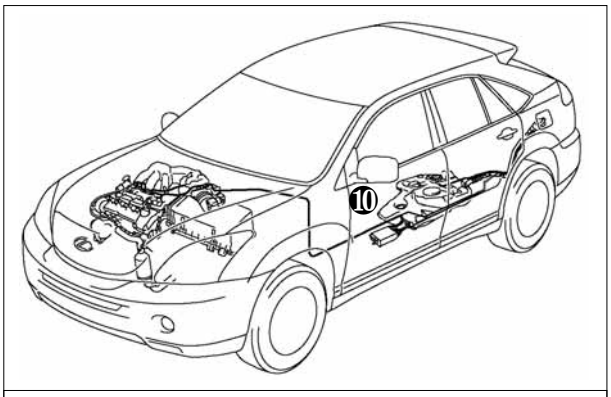

Fuel Tank and Fuel Line Components

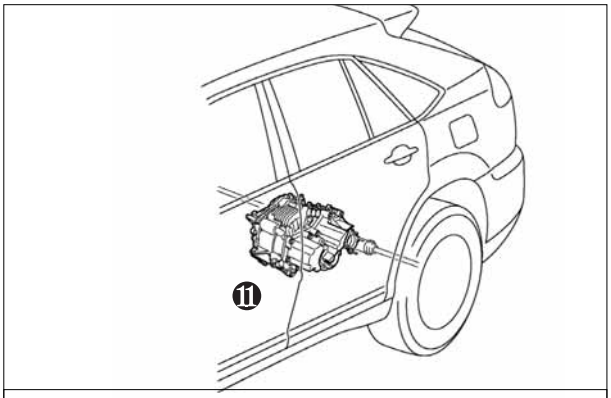

Rear Electric Motor

COMPONENT	LOCATION	DESCRIPTION
A/C ❽ Compressor	Engine Compartment	3-phase high voltage AC electrically driven motor compressor.
EPS DC-DC ❾ Converter	Underneath the cargo area by the spare tyre	Converts 288-Volts from the HV battery pack to 42-Volt. Yellow-coloured cables conduct the 42-Volt power under-neath the vehicle floor pan to the power steering rack via the EPS ECU, located in the engine compartment.
Fuel Tank ⑩ and Fuel Lines	Undercarriage, Driver Side	The fuel tank provides petrol via a single fuel line to the engine. The fuel line is routed along the passenger side under the floor pan.
Rear Electric ⑪ Motor	Rear Sub-Frame	3-phase high voltage AC permanent magnet electric motor contained in the rear transaxle used to power the rear wheels.

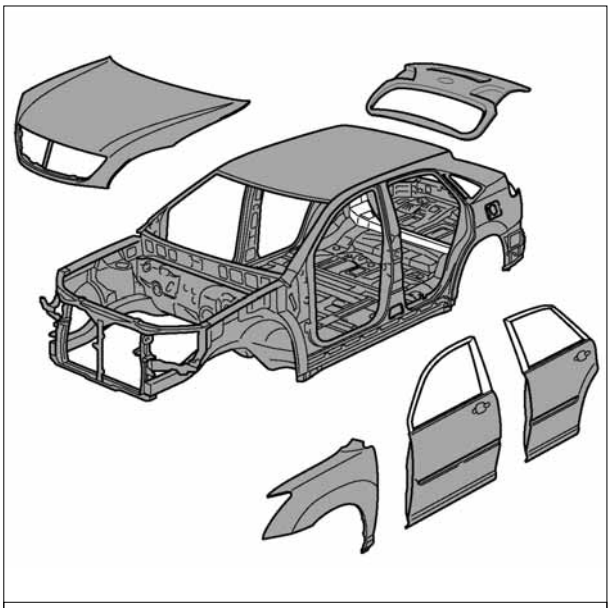

Steel Unibody

Key Specifications

Petrol Engine:	(155 kW), 3.3- litre V6 Aluminum Alloy Engine
Electric Motors:	Front - (123kW), Permanent Magnet Motor Rear - (50kW), Permanent Magnet Motor
Transmission:	Automatic Only
HV Battery:	288-Volt Sealed NiMH Battery
Curb Weight:	1,981 kg
Fuel Tank:	65 litres
Frame Material:	Steel Unibody
Body Material:	Steel Panels

HYBRID SYNERGY DRIVE OPERATION

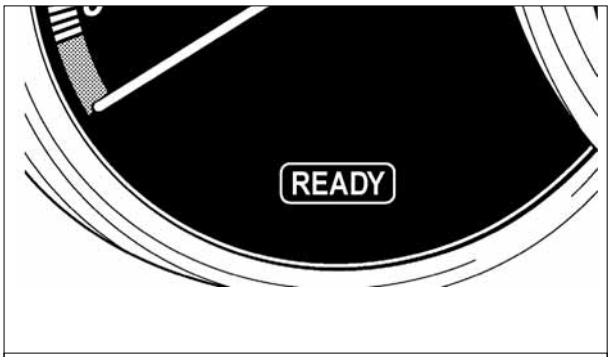

Instrument cluster **READY** Indicator

Once the **READY** indicator is illuminated in the instrument cluster, the vehicle may be driven. However, the petrol engine does not idle like a typical vehicle and will start and stop automatically. It is important to recognise and understand the **READY** indicator provided in the instrument cluster. When lit, it informs the driver that the vehicle is on and operational even though the petrol engine may be off and the engine compartment is silent.

Vehicle Operation

- With the RX400h, the petrol engine may stop and start at any time while the **READY** indicator is on.
- Never assume that the vehicle is shut off just because the engine is off. Always look for the **READY** indicator status. The vehicle is shut off when the **READY** indicator is off.
- The vehicle may be powered by:
    1. The electric motor only.
    2. The petrol engine only.
    3. A combination of both the electric motor and the petrol engine.
- The vehicle computer determines the mode in which the vehicle operates to improve fuel economy and reduce emissions. The driver cannot manually select the mode.

HYBRID VEHICLE (HV) BATTERY PACK AND AUXILIARY BATTERY

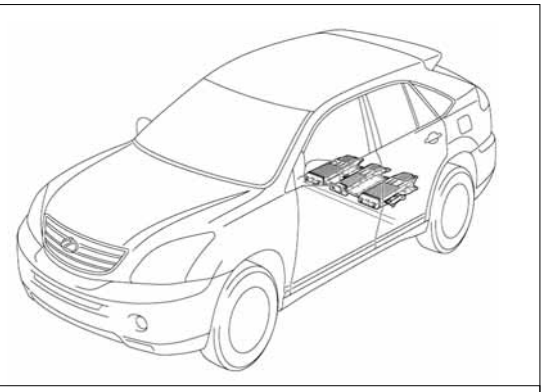

288-Volt HV Battery Pack

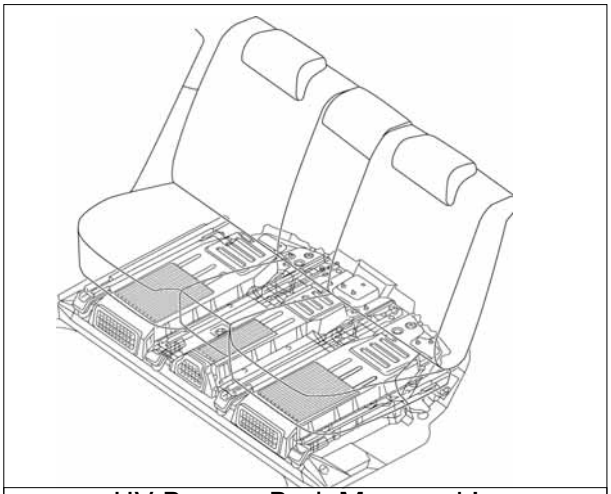

HV Battery Pack Mounted in Cabin Area

The RX400h contains a next generation high voltage, Hybrid Vehicle (HV) battery pack and a low voltage auxiliary battery. The HV battery pack contains non-spillable, sealed Nickel Metal Hydride (NiMH) battery modules and the auxiliary battery is a typical automotive lead-acid type.

HV Battery Pack

- The HV battery pack is enclosed in a metal case and is rigidly mounted to the cabin area floor pan cross member under the rear seat. The metal case is isolated from high voltage and concealed by a cover in the cabin area.
- The HV battery pack consists of 30 low voltage (9.6-Volt) NiMH battery modules connected in series to produce approximately 288-Volts. Each NiMH battery module is non-spillable and sealed in a metal case.
- The electrolyte used in the NiMH battery module is an alkaline of potassium and sodium hydroxide. The electrolyte is absorbed into the battery cell plates and will form a gel that will not normally leak, even in a collision.
- In the unlikely event the battery pack is overcharged, the modules vent gases directly outside the vehicle through a vent hose.

HV BATTERY PACK	
Battery pack voltage	288-Volts
Number of NiMH battery modules in the pack	30
NiMH battery module voltage	9.6-Volts
NiMH battery pack dimensions	63x108x18cm
NiMH Battery pack weight	69kg

Components Powered by the HV Battery Pack

- Front Electric Motor
- Inverter/Converter
- Electric Generator
- Electric Power Steering
- Rear Electric Motor
- A/C Compressor
- Power Cables

HYBRID VEHICLE (HV) BATTERY PACK AND AUXILIARY BATTERY

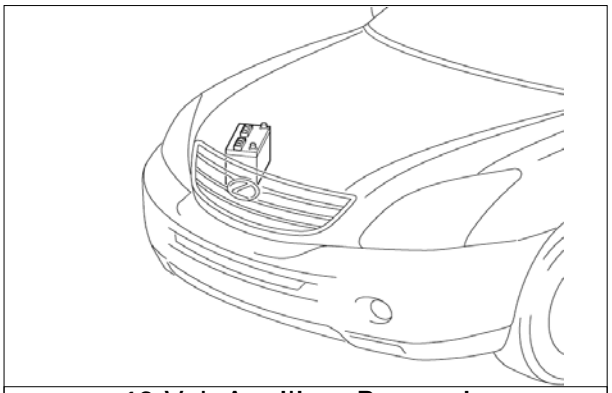

12-Volt Auxiliary Battery in Engine Compartment

HV Battery Pack Recycling

- The HV battery pack is recyclable. Contact the nearest Lexus dealer or Lexus Australia.

The Auxiliary Battery

- The RX400h also contains a lead-acid 12-Volt battery. The 12-Volt auxiliary battery powers the vehicle electrical system similar to a conventional vehicle. As with conventional vehicles, the auxiliary battery is grounded (negative pole) to the metal chassis of the vehicle.

- The auxiliary battery is located in the engine compartment area.

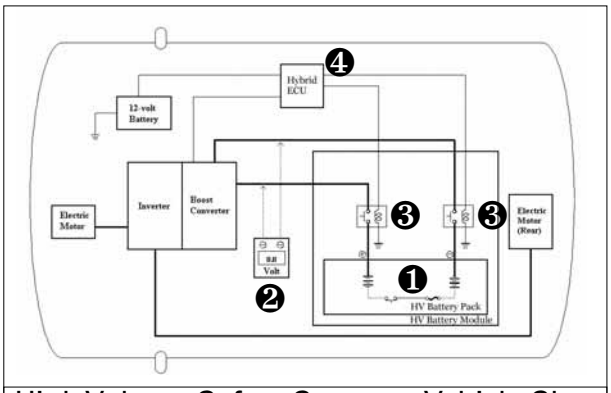

High Voltage Safety System – Vehicle Shut Off (**READY**-OFF)

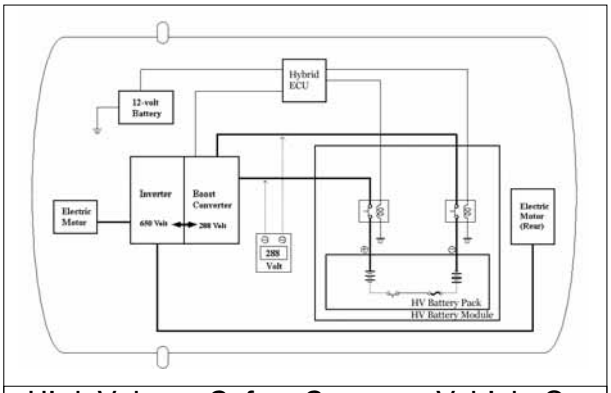

High Voltage Safety System – Vehicle On and Operational (**READY**-ON)

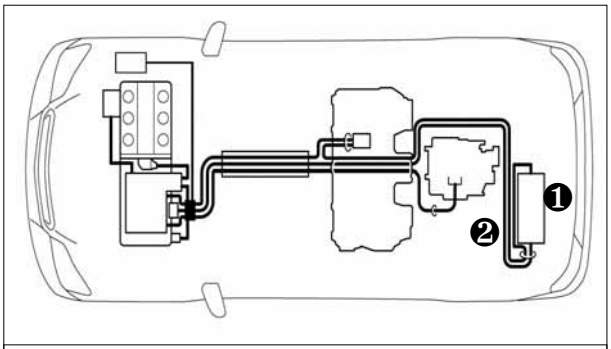

HV Battery and DC-DC Converter Cable Routing
Note: Positive and negative power cables shown bundled as a single line

⚠ **WARNING:**

- *Power remains in the high voltage electrical system for 5 minutes after the HV battery pack is shut off.*
- ***Never** touch, cut, or open any orange high voltage power cable or high voltage component.*
- *Failure to follow these warnings can cause severe burns and electric shock that may result in death or serious injury.*

The HV battery pack powers the high voltage electrical system with DC electricity. Positive and negative high voltage power cables are routed from the battery pack, under the vehicle floor pan, to the inverter/converter. The inverter/converter contains a circuit that boosts the HV battery voltage from 288 to 650-Volts DC. The inverter creates 3-phase AC to power the motors. A set of 3 power cables is routed from the inverter to each high voltage motor (electric motor, electric generator, A/C compressor, and 4WD rear motor). Occupants in the vehicle and emergency responders are separated from high voltage electricity by the following system:

High Voltage Safety System

- A high voltage fuse ❶ provides short circuit protection in the HV battery pack.
- Positive and negative high voltage power cables ❷ connected to the HV battery pack are controlled by 12-Volt normally open relays ❸. When the vehicle is shut off, the relays stop electricity flow from the HV battery pack.
- Both positive and negative power cables ❷ are isolated from the metal chassis, so there is no possibility of shock by touching the metal chassis.
- A ground fault monitor ❹ continuously monitors for high voltage leakage to the metal chassis while the vehicle is running. If a malfunction is detected, the vehicle computer ❹ will illuminate the master warning light ⚠ in the instrument cluster and indicate "CHECK HYBRID SYSTEM" on the Multi-information Display.
- The HV battery pack relays will automatically open to stop electricity flow in a collision sufficient to activate the SRS or rear collision sensors.

The HV battery pack also powers a 288-Volt DC to 42-Volt DC converter for the assist motor in the electric power steering (EPS). This DC-DC converter is located under the cargo area ❶. Both positive and negative 42-Volt cables ❷ are contained within plastic yellow sheathing and are isolated from the metal vehicle chassis.

NOTE:
42-Volt DC has a higher arc potential than 12-Volt DC.

SRS AIRBAGS & SEAT BELT PRETENSIONERS

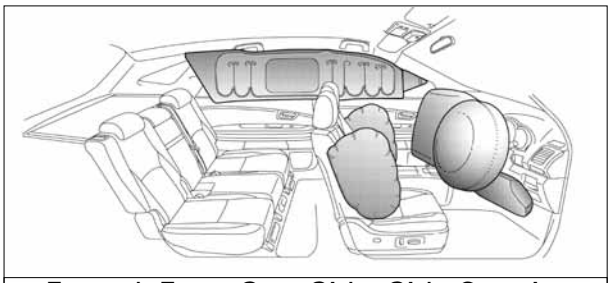

Frontal, Front Seat Side, Side Curtain, and Driver Knee Airbags.

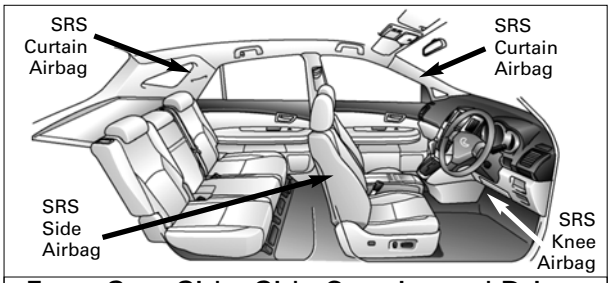

Front Seat Side, Side Curtain, and Driver Knee Airbag Identifiers

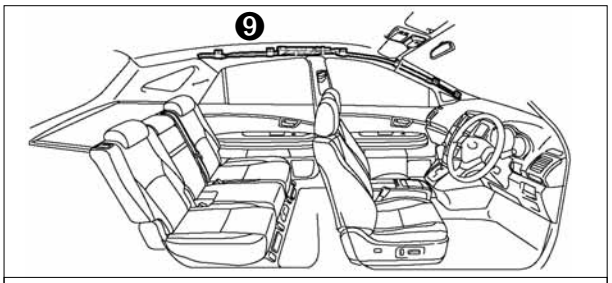

Side Curtain Airbag Inflator in Roof Rail

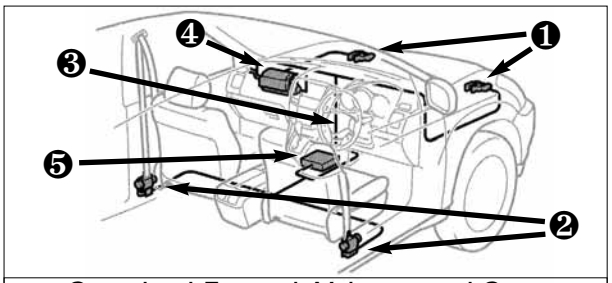

Standard Frontal Airbags and Seat Belt Pretensioners

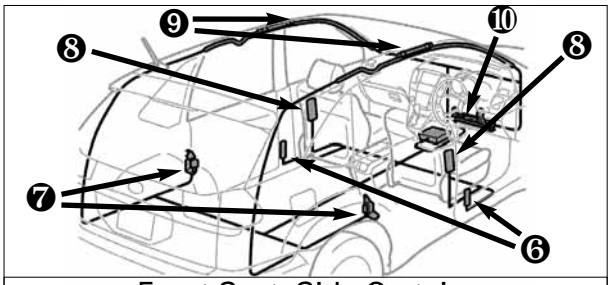

Front Seat, Side Curtain, and Knee Airbags

Standard Equipment

- Electronic frontal impact sensors (2) are mounted in the engine compartment ❶.
- Front seat belt pretensioners are mounted near the base of the B-pillar ❷.
- Frontal dual stage airbag for the driver ❸ is mounted in the steering wheel hub.
- Frontal dual stage airbag for the front passenger ❹ is integrated into the dashboard and deploys through the top of the dashboard.
- SRS computer ❺ is mounted on the floor pan underneath the centre console. It also contains an impact sensor.
- Front electronic side impact sensors (2) are mounted near the base of the B-pillars ❻.
- Rear electronic side impact sensors (2) are mounted near the base of the C-pillars ❼.
- Front seat side impact airbags ❽ are mounted in the front seats.
- Side curtain airbags ❾ are mounted along the outer edge inside the roof rails.
- Driver knee airbag ❿ is mounted on the lower portion of the dash.

⚠ **WARNING:**

- *The SRS computer is equipped with a backup source that powers the SRS airbags up to **90 seconds** after disabling the vehicle.*
- *The front seat side airbags and the side curtain airbags may deploy independently of each other.*
- *The driver knee airbag deploys simultaneously with the driver frontal airbag and seat belt pretensioner.*
- *Failure to follow these warnings may result in death or serious injury from the sudden deployment of the SRS.*

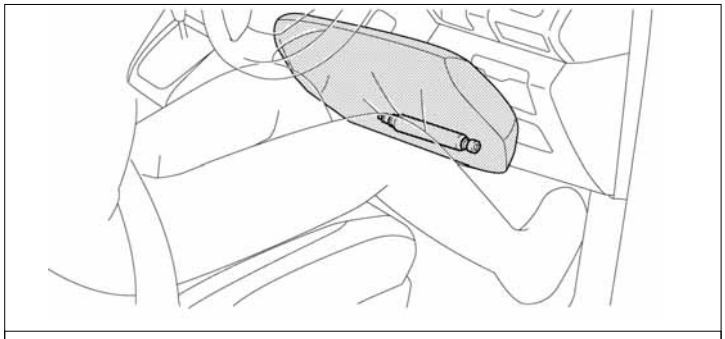

Knee Airbag and Inflator

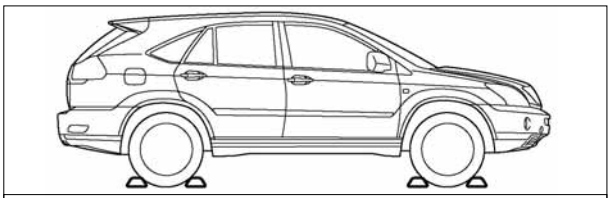

Chock Wheels

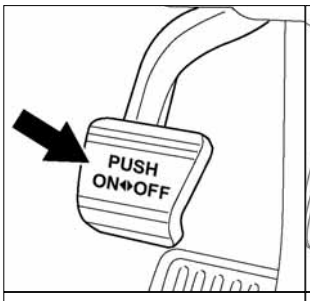

Set Parking Brake

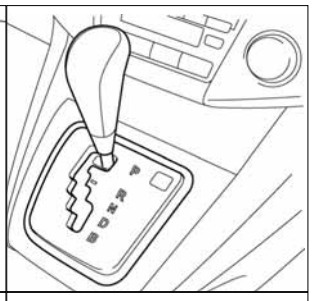

Shift Lever in Park

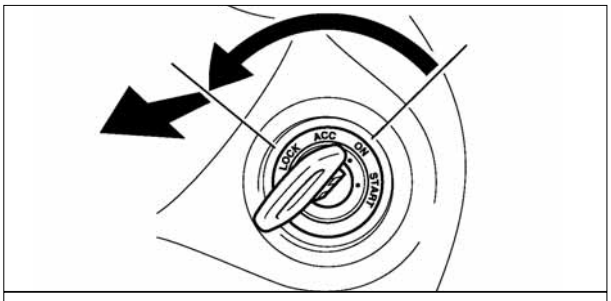

Turn Ignition Key Off

On arrival, emergency responders should follow their standard operating procedures for vehicle incidents. Emergencies involving the RX400h may be handled like other automobiles except as noted in these guidelines for Extrication, Fire, Overhaul, Recovery, Spills, First Aid, and Submersion.

⚠ **WARNING:**

- ***Never*** *assume the RX400h is shut off simply because it is silent.*
- *Always observe the instrument cluster for the* **READY** *indicator status to verify whether the vehicle is on or shut off.*
- *Failure to shut off the vehicle before emergency response procedures are performed may result in serious injury or death from the unintentional deployment of the SRS or severe burns and electric shock from the high voltage electrical system.*

Extrication

- Immobilise Vehicle

  Chock wheels and set the parking brake.

  Move the shift lever to the **P** (Park) position.

- Disable Vehicle

  Performing either of the following two procedures will shut the vehicle off and disable the HV battery pack, SRS, and petrol fuel pump.

  Procedure #1

  1. Turn the ignition key off.
  2. Remove the key and place on dash. If the key cannot be removed, disconnect the 12-Volt auxiliary battery in the engine compartment.

NOTE:

Before removing the key or disconnecting the 12-Volt auxiliary battery, reposition power seats and tilt/telescoping steering wheel, lower windows, open door locks and fuel door as required. Once the 12-Volt auxiliary battery is disconnected power controls will not operate.

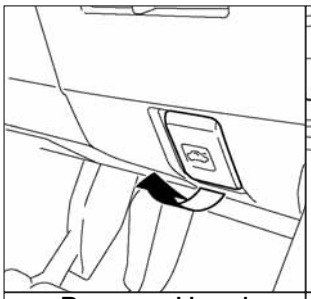

Remote Hood Release

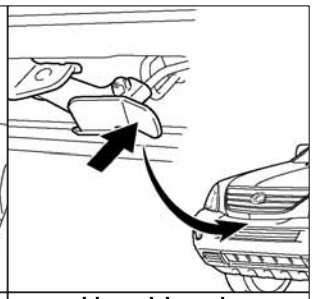

Hood Latch Release

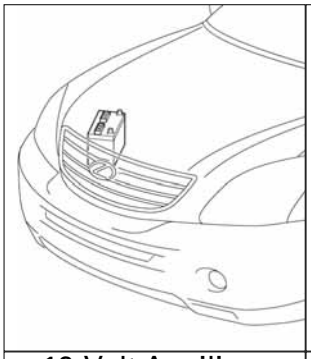

12-Volt Auxiliary Battery

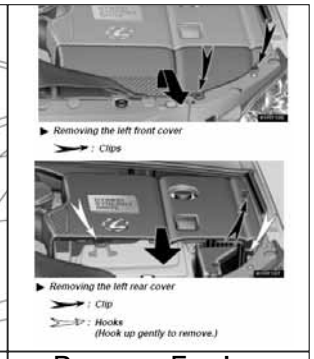

Remove Engine Compartment Covers

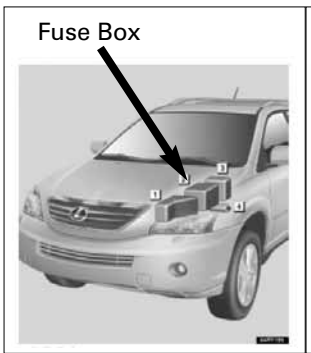

Fuse Box Location

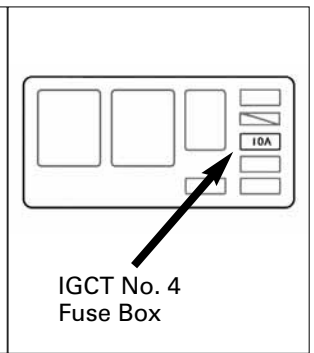

IGCT No. 4 Fuse Location

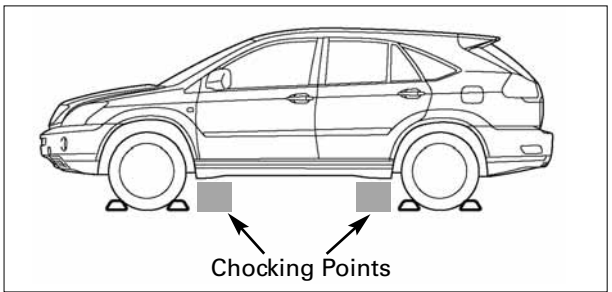

Chocking Points

Extrication *(Continued)*

Procedure #2 (Alternate if ignition key is inaccessible)

1. Disconnect the 12-Volt auxiliary battery in the engine compartment.
2. Remove the engine compartment covers.
3. Remove the fuse box cover.
4. Remove the IGCT No. 4 fuse (10A Red coloured) in the engine compartment junction block as illustrated. When in doubt, pull all four fuses in the fuse block.

⚠ **WARNING:**

- *After disabling the vehicle, power is maintained for 90 seconds in the SRS system and 5 minutes in the high voltage electrical system.*
- *If either of the disabling procedures above cannot be performed, proceed with caution as there is no assurance that the high voltage electrical system, SRS, or fuel pump are disabled.*
- ***Never** touch, cut, or open any orange high voltage power cable or high voltage component.*
- *Failure to follow these warnings may result in death or serious injury from the sudden deployment of the SRS or severe burns and electric shock from the high voltage electrical system.*

Stabilise Vehicle

Chock/stabilise at (4) points directly under the front and rear pillars.

Do not place blocks under the high voltage power cables, exhaust system, or fuel system.

Access Patients

Glass Removal

Use normal glass removal procedures as required.

SRS Awareness

Responders need to be cautious when working in close proximity to undeployed airbags and seat belt pretensioners. Deployed front dual stage airbags automatically ignite both stages within a fraction of a second.

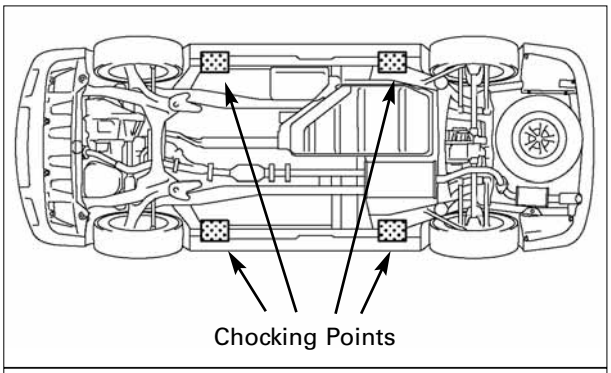

Underbody View

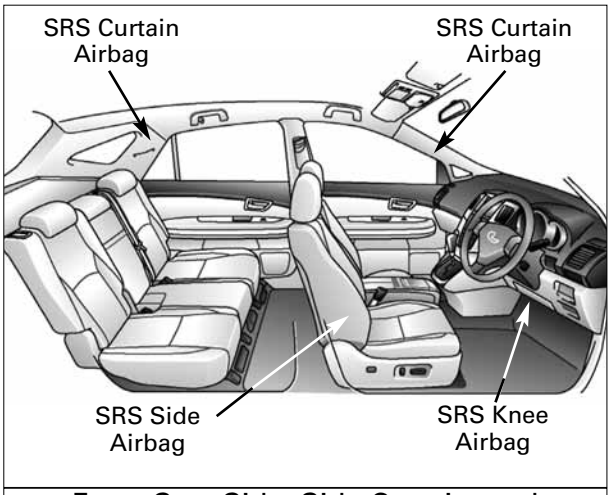

Front Seat Side, Side Curtain, and Driver Knee Airbag Identifiers.

Extrication *(Continued)*

Door Removal/Displacement

Doors can be removed by conventional rescue tools such as hand, electric, and hydraulic. In certain situations, it may be easier to pry back the body to expose and unbolt the hinges.

Roof Removal

The vehicle contains side curtain airbags. If undeployed, it is not recommended to remove or to displace the roof. The side curtain airbags may be identified as illustrated.

Dash Displacement

The vehicle contains side curtain airbags. Do not remove or displace the roof during a dash displacement to avoid cutting into undeployed airbags or inflators. As an alternative, dash displacement may be performed by using a Modified Dash Roll.

Rescue Lift Air Bags

Responders should not place chocks or rescue lift airbags under the high voltage power cables, exhaust system, or fuel system.

Repositioning Steering Wheel and Seat

Power tilt/telescopic steering wheel and seat controls are shown in the illustrations.

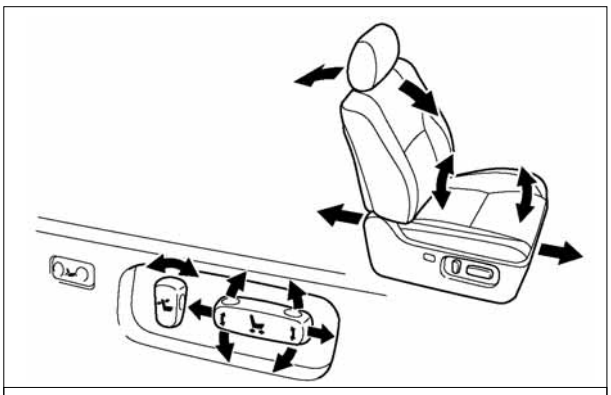

Power Front Seat Controls

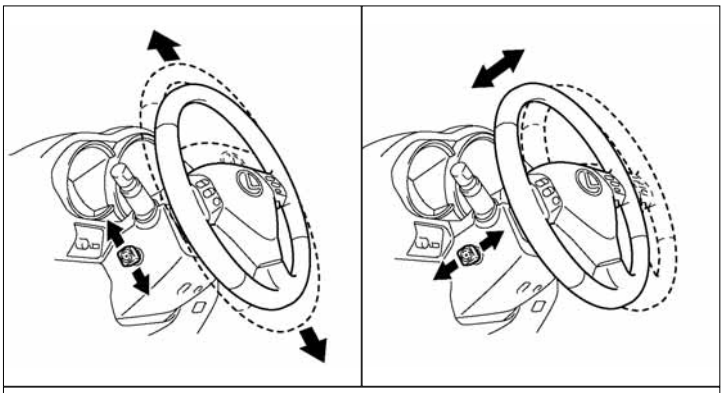

Power Tilt and Telescoping Controls

Fire

Approach and extinguish a fire using proper vehicle fire fighting practices.

- ### Extinguishing Agent

  Water has been proven to be a suitable extinguishing agent.

- ### Initial Fire Attack

  Perform a fast, aggressive fire attack.

  Divert the runoff from entering watershed areas.

  Attack teams may not be able to identify a RX400h until the fire has been knocked down and overhaul operations have commenced.

- ### Fire in the HV Battery Pack

  Should a fire occur in the NiMH HV battery pack, attack crews should utilise a water stream or fog pattern to extinguish any fire within the luggage compartment *except* for the HV battery pack.

  When allowed to burn themselves out, the RX400h NiMH battery modules burn rapidly and can quickly be reduced to ashes except for the metal.

  Offensive Fire Attack

  Normally flooding the NiMH HV battery pack with copious amounts of water at a safe distance will effectively control the HV battery pack fire by cooling the adjacent NiMH battery modules to a point below their ignition temperature. The remaining modules on fire, if not extinguished by the water, will burn themselves out.

  However, flooding the RX400h HV battery pack is *not* recommended due to battery design and forward location preventing the responder from properly applying water through the available vent openings safely. It is recommended that the incident commander allow the RX400h HV battery pack to burn itself out.

⚠ **WARNING:**

- *Potassium hydroxide and sodium hydroxide are key ingredients in the NiMH battery module electrolyte.*
- *The modules are contained within a metal case and access is limited to duct openings under the rear seat.*
- *The HV battery cover should **never** be breached or removed under any circumstances including fire.*
- *Failure to follow these warnings can cause severe burns and electric shock that may result in death or serious injury.*

Defensive Fire Attack

If the decision has been made to fight the fire using a defensive attack, the fire attack crew should pull back a safe distance and allow the NiMH battery modules to burn themselves out. During this defensive operation, fire crews may utilise a water stream or fog pattern to protect exposures or to control the path of smoke.

Overhaul

During overhaul, immobilise and disable the vehicle if not already done. See illustrations on page 11.

- Immobilise Vehicle

  Chock wheels and set the parking brake.
  Move the shift lever to the **P** (Park) position.

- Disable Vehicle

  Performing any one of the following two procedures will shut the vehicle off and disable the HV battery pack, SRS, and petrol fuel pump.

  Procedure #1

  Turn the ignition key off.

  1. Remove the key and place on dash.
  2. If the key cannot be removed, disconnect the 12-Volt auxiliary battery in the engine compartment.

  Procedure #2 (alternate if ignition key is inaccessible)

  1. Disconnect the 12-Volt auxiliary battery in the engine compartment.
  2. Remove engine compartment covers.
  3. Remove the fuse box cover.
  4. Remove the IGCT No. 4 Fuse (10A Red coloured) in the engine compartment junction block. When in doubt, pull all four fuses in the fuse block.

⚠ **WARNING:**

- *After disabling the vehicle, power is maintained for 90 seconds in the SRS system and 5 minutes in the high voltage electrical system.*
- *If either of the disabling steps above cannot be performed, proceed with caution as there is no assurance that the high voltage electrical system, SRS, or fuel pump are disabled.*
- ***Never** touch, cut, or open any orange high voltage power cable or high voltage component.*
- *Failure to follow these warnings may result in death or serious injury from the sudden deployment of the SRS or severe burns and electric shock from the high voltage electrical system.*

Recovery/Recycling of NiMH HV Battery Pack

Clean up of the HV battery pack can be accomplished by the vehicle recovery crew without further concern of runoff or spillage.
For information regarding recycling of the HV battery pack, contact the nearest Lexus dealer or Lexus Australia.

Spills

The RX400h contains the same common automotive fluids used in other non-hybrid Lexus vehicles, with the exception of NiMH electrolyte used in the HV battery pack. The NiMH battery electrolyte is a caustic alkaline (pH 13.5) that is damaging to human tissues.
The electrolyte, however, is absorbed in the cell plates and will not normally spill or leak out even if a battery module is cracked.
A catastrophic crash that would breach both the metal battery pack case and the plastic battery module would be a rare occurrence.

Similar to the use of baking soda to neutralise a lead-acid battery electrolyte spill, a dilute boric acid solution or vinegar can be used to neutralise a NiMH battery electrolyte spill.

In an emergency, check the Material Safety Data Sheets (MSDS) on page 20.

- Handle NiMH electrolyte spills using the following Personal Protective Equipment (PPE):

  Splash shield or safety goggles. Fold down helmet shields are not acceptable for acid or electrolyte spills.

  Rubber, latex or nitrile gloves.

  Apron suitable for alkaline.

  Rubber boots.

- Neutralise NiMH Electrolyte

  Use a boric acid solution or vinegar.

  Boric acid solution - 800 grams boric acid to 20 litres water.

First Aid

Emergency responders may not be familiar with a NiMH electrolyte exposure when rendering aid to a patient. Exposure to the electrolyte is unlikely except in a catastrophic crash or through improper handling. Utilise the following guidelines in the event of exposure.

> ⚠ **WARNING:**
> *The NIMH battery electrolyte is a caustic alkaline (pH 13.5) that is damaging to human tissues. Wear proper personal protective equipment to avoid coming into contact with the electrolyte.*

- Wear Personal Protective Equipment (PPE)

  Splash shield or safety goggles. Fold down helmet shields are not acceptable for acid or electrolyte spills.

  Rubber, latex or nitrile gloves.

  Apron suitable for alkaline.

  Rubber boots.

- Absorption

  Perform gross decontamination by removing affected clothing and properly disposing of the garments.

  Rinse the affected areas with water for 20 minutes.

  Transport patients to the nearest emergency medical care facility.

- Inhalation in Non-Fire Situations

  No toxic gases are emitted under normal conditions.

- Inhalation in Fire Situations

  Toxic gases are given off as by-products of combustion.

  All responders in the Hot Zone should wear the proper PPE for fire fighting including SCBA.

  Move a patient from the hazardous environment to a safe area and administer oxygen.

  Transport patients to the nearest emergency medical care facility.

- Ingestion

  Do not induce vomiting.

  Allow a patient to drink large quantities of water to dilute electrolyte (Never give water to an unconscious person).

  If vomiting occurs spontaneously, keep the patient's head lowered and forward to reduce the risk of asphyxiation.

  Transport patients to the nearest emergency medical care facility.

Submersion

When fully or partially submersed a RX400h can be safely handled by following these recommendations:

- Remove the vehicle from the water.
- Drain the water from the vehicle if possible.
- Follow the immobilising and disabling procedures on page 11.

ROADSIDE ASSISTANCE

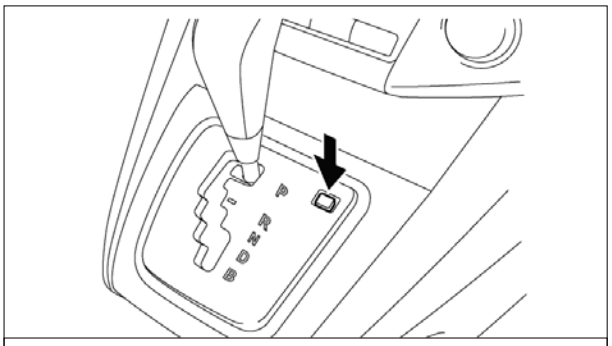

Push in Shift Lock Release

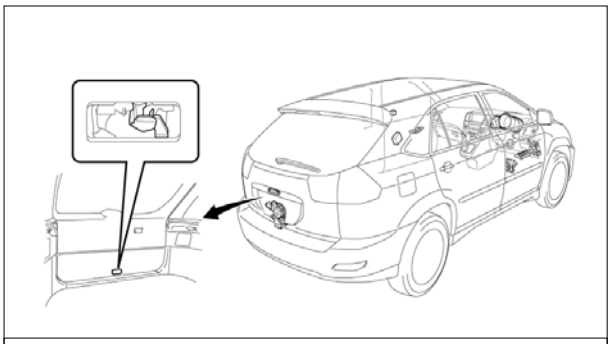

Manual Back Door Release

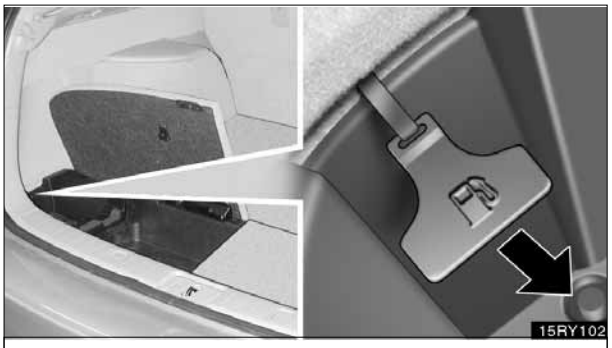

Manual Fuel Door Release

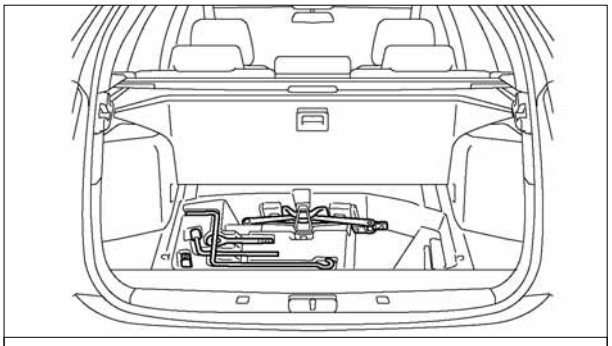

Tools in Cargo Area

Lexus RX400h roadside assistance may be handled like conventional Lexus vehicles except as noted in the following pages.

Lexus Roadside Assistance is available during the basic warranty period by contacting:

Lexus Drivecare: 1800 253 987

Shift Lever

Similar to most Lexus vehicles, the RX400h uses a gated shift lever as shown in the illustration. However, the RX400h shift lever includes a motor brake **B** position for high load regenerative braking when decelerating down a steep grade.

Towing

- A 4WD RX400h must be towed with all 4 wheels off the ground.
- Do not tow the vehicle with 4 wheels on the ground. This may cause serious damage to the vehicle.
- The vehicle may be shifted out of **P**ark into **N**eutral by turning the ignition-on, depressing the brake, then moving the gated shift lever to N.
- If the shift lever cannot be moved out of **P** (Park), a shift lock release button is provided near the shift lever as shown in the illustration.

Electric Back Door Opener

The RX400h is equipped with an electric back door opener. In the event of 12-Volt power loss, the door can only be opened with the manual release located on the inside, bottom of the door.

Electric Fuel Door Opener

The RX400h is equipped with an electric fuel door opener. In the event of 12-Volt power loss, the fuel door can only be opened with the manual release located inside the cargo area.

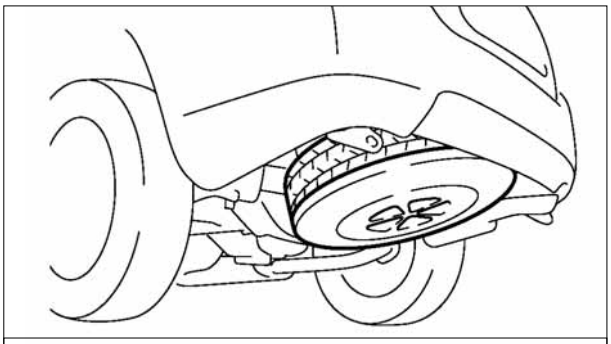

Spare Tyre under Cargo Area

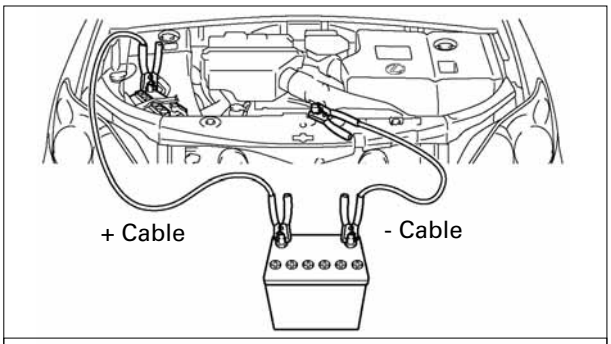

Jumper Cable Connections

Spare Tyre

The jack and tools are provided in the cargo area as illustrated. The spare tyre is fixed by the carrier underneath, outside the cargo area.

Jump Starting

The 12-Volt auxiliary battery may be jump started if the vehicle does not start and the instrument cluster gauges are dim or off after turning the ignition key to "START."

The 12-Volt auxiliary battery is located in the engine compartment. The jump starting procedure is the same as for other Lexus vehicles.

- Connect the positive jumper cable to the positive battery post.
- Connect the negative terminal to the ground nut.
- The high voltage HV battery pack cannot be jump started.

Immobiliser and Anti-Theft Alarm

The vehicle has an electronic key immobiliser system and anti-theft alarm as standard equipment. The vehicle may only be started with a coded immobiliser coded key.

To disarm the Anti-Theft Alarm:

- Unlock the door using an ignition key or wireless remote control.
- Turn the ignition switch on.

PRODUCT SAFETY DATA SHEET

1. Product and Company Identification

Name of Product	Prismatic Nickel Metal-hydride Battery (module)
Model name	EV-MP6R5R20 (GEN NP 2.5 8 cells module type) EV-MP6R5R27 (GEN NP 2.5 12 cells module type)
Company name	Panasonic EV Energy Co., Ltd.
Address	555,Sakaijyuku,Kosai-City, Shizuoka, 431-0452 Japan
Division	Engineering Department
Telephone/Fax	+81-53-577-3112 / +81-53-577-3114
Issue date/Revised date	Issue date Jan 30th, 2006
Issue number	p0056

2. Substance Identification (Main substances of Prismatic Nickel Metal-hydride Battery [module])

(1) Positive	Substance	Nickel Hydroxide
	CAS No.	12054-48-7
(2) Negative	Substance	Hydrogen storage alloy
	CAS No	Not specified
(3) Electrolyte	Substance	Alkaline solution Potassium hydroxide (Substance in alkaline solution)
	CAS No.	1310-58-3

3. Hazardous and Toxicity Class

(1) Class Name	Not applicable.
(2) Hazard	No hazard in-normal situations. However, heat generation and/or alkaline electrolyte leakage may occur in the event of positive/negative terminal short circuiting by metallic or highly conductive objects.
(3) Toxicity	No toxicity in-normal situations. In the event of a burning battery pack, there is a possibility that an alkaline mixed gas may be emitted, which may in turn irritate eyes, nose, and/or throat. If the battery is stored for very long time periods, electrolyte and/or metal materials may leak and result in surface soil pollution.

4. First Aid Measures

In the event of alkaline electrolyte and/or alkaline mixed gas leakage.

(1) Eye contact	Contact may cause corneal injury and blindness. Wash eyes with large amounts of running water for at least 15 minutes. Seek medical treatment immediately. If appropriate actions are not taken, eye disorders may result.
(2) Skin contact	Wash the contact area with plenty of water and seek medical treatment immediately. Clothing, shoes, and socks, etc. which have come into contact with alkaline electrolyte should be taken off immediately. If appropriate actions are not taken, skin inflammation may occur.
(3) Inhalation	Move the exposed person to fresh air area immediately. Cover up the affected person with a blanket. Seek medical treatment immediately.
(4) Swallowing	Do not induce vomiting. Seek medical treatment immediately.

5. Fire Fighting Measures

(1) Firefighting measures and extinguisher	(1) Use powder-type ABC extinguisher. (2) When corrosive gas could be generated in the event of fire fighting, use appropriate breathing apparatus. (3) Extinguishing a fire with a large amount of water may be an effective method. However, this should be considered as a supplementary means. If there are no readily available large amounts of water, use dry sand instead; as the application of only a small amount of water may temporarily act as an accelerant and affect the fire adversely while the hydrogen storage alloy is burning. (4) Remove the flammable materials from the fire. (5) If fire occurs nearby to batteries, move them to a safe place.
(2) Possibility of fire and explosion	(1) Fire may occur when: Short circuit-induced arcing occurs. A large current is applied to a module or a cell. (2) Explosion may occur when: The battery is contained in a hermetic container, since oxygen and/or hydrogen may be generated by the battery. The battery itself will not explode in normal conditions. (3) Fire and explosion may occur when: The battery is over-charged or over-discharged. The battery is over 100 deg C. The battery is in a hermetic container with an ignition source nearby and overcharge or overdischarge occurs.

6. Measures for electrolyte leakage

When the alkaline electrolyte leaks from battery.

	(1) Wipe off with a towel. (2) Keep away from flames. (3) Protective glasses and rubber gloves should be worn.

7. Handling and Storage

(1) No short circuit	Short circuit should be prevented since heat generation and/or fire may result.
(2) No disassembly and reconstruction	The battery should not be disassembled and/or reconstructed for the following reasons: • If a cell is disassembled, alkaline electrolyte may leak. • If a module is disassembled, short circuiting may occur. • If a module is disassembled, cells will be damaged and alkaline electrolyte may leak.
(3) No over-charge or over-discharge	Battery should not be over-charged or over-discharged to prevent possible oxygen and/or hydrogen generation.
(4) No usage in hermetic container	Battery should not be used in a hermetic container since the container may explode due to gas generated from the battery.

8. Exposure Control

When alkaline electrolyte leakage from the battery occurs, necessary action should be taken as follows:

(1) Acceptable concentration	Not specified in Japanese Industrial Hygienic association and ACGIH.
(2) Facilities	(1) Ventilation should be considered. Limited exhaust device or other ventilation device should be used. (2) Exhaust system or exhaust hole is required when the battery is used in a container.
(3) Prevention measures	Safety glasses, mask, and gloves should be worn.

PRODUCT SAFETY DATA SHEET

9. Physical and Chemical Properties

(1) Appearance	The nickel hydrogen battery (cell and module) is contained within a plastic resin case. The module geometry is basically a thin rectangular trapezoid. A fixed voltage value cannot be specified.

10. Hazardous Information

As indicated in Sections 3 and 5.

11. Toxicological Information

In the event of alkaline electrolyte leakage.

(1) Acute toxicity	LD50 2g/kg oral rat (based on material safety data sheet of liquid potassium hydroxide).
(2) Stimulation	Inflammation of the cornea can be caused from scratching/rubbing one's eyes. Exposure for extended time periods can irritate bronchial tubes and eyes.

12. Transport Information

(1) Battery terminal should be packaged to prevent external short circuits. Batteries should not be allowed to contact each other as prevention against short circuiting when packaged.

(2) There should be a marking on the package that indicates that Nickel Hydrogen Storage batteries are contained.
There should be a *"Non-spillable"* marking for international shipment. *(Refer to Section 14).*

(3) Packaging should be stable and durable enough to protect batteries from vibration, shock, dropping and stacking.
Batteries should not fall down and/or be allowed to be inverted/tilted during shipping.

(4) Packaging should not become wet (rain and/or dew, etc), during storage and shipping.

(5) Keep away from fire/flame during storage and shipping, and do not store batteries in a hot environment.
NOTE: One example of storage in a hot environment is that of exposing a vehicle with a battery installed in very hot weather for a long time.

13. Disposal

(1) Battery should be disposed in accordance with provisions of vehicle manufacturer or dealer.

(2) Domestic waste disposal is not allowed.

14. Regulatory Information

(1) Hazardous Materials Transportation (Hazardous shipping transportation and storage regulation)	This type of batteries are not regulated by DOT (Department of Transportation) and IATA (International Air Transport Association)

15. Others

Not specified.

© 2006 Toyota Motor Corporation Australia Limited.

All rights reserved. This document may not be reproduced or copied, in whole or in part, without the written permission of Toyota Motor Corporation Australia Limited.
Publication No. TSO0606-00.