2005 Pontiac Montana Owner Manual

Seats and Restraint Systems 1-1
Front Seats 1-3
Rear Seats 1-7
Safety Belts 1-30
Child Restraints 1-50
Airbag System 1-81
Restraint System Check 1-91

Features and Controls 2-1
Keys 2-3
Doors and Locks 2-9
Windows 2-23
Theft-Deterrent Systems 2-25
Starting and Operating Your Vehicle 2-30
Mirrors 2-42
OnStar® System 2-43
HomeLink® Transmitter 2-44
Storage Areas 2-48
Vehicle Personalization 2-57

Instrument Panel 3-1
Instrument Panel Overview 3-4
Climate Controls 3-26
Warning Lights, Gages, and Indicators 3-34
Message Center 3-45
Driver Information Center (DIC) 3-52
Audio System(s) 3-55

Driving Your Vehicle 4-1
Your Driving, the Road, and Your Vehicle 4-2
Towing 4-34

Service and Appearance Care 5-1
Service 5-3
Fuel 5-5
Checking Things Under the Hood 5-10
Bulb Replacement 5-44
Windshield Wiper Blade Replacement 5-50
Tires 5-52
Appearance Care 5-83
Vehicle Identification 5-91
Electrical System 5-92
Capacities and Specifications 5-99

Maintenance Schedule 6-1
Maintenance Schedule 6-2

Customer Assistance and Information 7-1
Customer Assistance and Information 7-2
Reporting Safety Defects 7-10

Index 1

Downloaded from www.Manualslib.com manuals search engine

GENERAL MOTORS, GM, the GM Emblem, PONTIAC, the PONTIAC Emblem, and the name MONTANA are registered trademarks; of General Motors Corporation.

This manual includes the latest information at the time it was printed. We reserve the right to make changes after that time without further notice. For vehicles first sold in Canada, substitute the name “General Motors of Canada Limited” for Pontiac Division whenever it appears in this manual.

Keep this manual in the vehicle, so it will be there if it is needed while you are on the road. If the vehicle is sold, leave this manual in the vehicle.

Canadian Owners

A French language copy of this manual can be obtained from your dealer or from:

Helm, Incorporated
P.O. Box 07130
Detroit, MI 48207

How to Use This Manual

Many people read the owner manual from beginning to end when they first receive their new vehicle. If this is done, it can help you learn about the features and controls for the vehicle. Pictures and words work together in the owner manual to explain things.

Index

A good place to quickly locate information about the vehicle is the Index in the back of the manual. It is an alphabetical list of what is in the manual and the page number where it can be found.

Litho in U.S.A.
Part No. 05MONTANA A First Edition

©Copyright General Motors Corporation 05/17/04
All Rights Reserved

Downloaded from www.Manualslib.com manuals search engine

Safety Warnings and Symbols

There are a number of safety cautions in this book. We use a box and the word CAUTION to tell about things that could hurt you if you were to ignore the warning.

⚠ CAUTION:

These mean there is something that could hurt you or other people.

In the caution area, we tell you what the hazard is. Then we tell you what to do to help avoid or reduce the hazard. Please read these cautions. If you do not, you or others could be hurt.

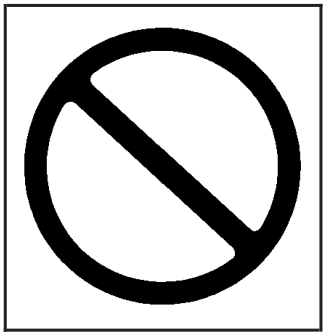

You will also find a circle with a slash through it in this book. This safety symbol means “Do Not,” “Do Not do this” or “Do Not let this happen.”

Downloaded from www.Manualslib.com manuals search engine

Vehicle Damage Warnings

Also, in this manual you will find these notices:

Notice: **These mean there is something that could damage your vehicle.**

A notice tells about something that can damage the vehicle. Many times, this damage would not be covered by your vehicle's warranty, and it could be costly. But the notice will tell what to do to help avoid the damage.

When you read other manuals, you might see CAUTION and NOTICE warnings in different colors or in different words.

There are also warning labels on the vehicle. They use the same words, CAUTION or NOTICE.

Vehicle Symbols

The vehicle has components and labels that use symbols instead of text. Symbols are shown along with the text describing the operation or information relating to a specific component, control, message, gage, or indicator.

If you need help figuring out a specific name of a component, gage, or indicator, reference the following topics:

- Seats and Restraint Systems in Section 1
- Features and Controls in Section 2
- Instrument Panel Overview in Section 3
- Climate Controls in Section 3
- Warning Lights, Gages, and Indicators in Section 3
- Audio System(s) in Section 3
- Engine Compartment Overview in Section 5

Downloaded from www.Manualslib.com manuals search engine

These are some examples of symbols that may be found on the vehicle:

CAUTION POSSIBLE INJURY	LATCH BOTH LAP AND SHOULDER BELTS TO PROTECT OCCUPANT DO NOT TWIST SAFETY BELT WHEN ATTACHING		MASTER LIGHTING SWITCH	ENGINE COOLANT TEMP	FUSE BOX ACCESS
PROTECT EYES BY SHIELDING	FASTEN SEAT BELTS	AIR BAG	TURN SIGNALS	BATTERY CHARGING SYSTEM	ENGINE COOLANT FAN
CAUSTIC BATTERY ACID COULD CAUSE BURNS	MOVE SEAT FULLY REARWARD SECURE CHILD SEAT	DO NOT INSTALL A REAR-FACING CHILD RESTRAINT IN THIS SEATING POSITION	PARKING LAMPS	BRAKE	FUEL
AVOID SPARKS OR FLAMES	PULL BELT OUT COMPLETELY THEN SECURE CHILD SEAT	DO NOT INSTALL A FORWARD-FACING CHILD RESTRAINT IN THIS SEATING POSITION	HAZARD WARNING FLASHER	COOLANT	OWNER'S MANUAL
SPARK OR FLAME COULD EXPLODE BATTERY	POWER WINDOW	DOOR LOCK UNLOCK	DAYTIME RUNNING LAMPS	ENGINE OIL PRESSURE	SERVICE MANUAL
			FOG LAMPS	ANTI-LOCK BRAKES	

Downloaded from www.Manualslib.com manuals search engine

✍ NOTES

Downloaded from www.Manualslib.com manuals search engine

Section 1 Seats and Restraint Systems

Front Seats 1-3
Manual Seats 1-3
Six-Way Power Seats 1-4
Heated Seats 1-5
Reclining Seatbacks 1-5
Head Restraints 1-7

Rear Seats 1-7
Rear Seat Operation 1-7
Second Row Safety Belt Stowage 1-7
Flip and Fold Feature 1-8
Split Bench Seats 1-8
Bucket Seats 1-16
Captain Chairs 1-22
Stowable Seat 1-26

Safety Belts 1-30
Safety Belts: They Are for Everyone 1-30
Questions and Answers About Safety Belts 1-34
How to Wear Safety Belts Properly 1-35
Driver Position 1-36
Shoulder Belt Height Adjustment 1-43
Safety Belt Use During Pregnancy 1-44
Right Front Passenger Position 1-44
Rear Seat Passengers 1-44
Rear Safety Belt Comfort Guides for Children and Small Adults 1-47
Safety Belt Pretensioners 1-49
Safety Belt Extender 1-49

Child Restraints 1-50
Older Children 1-50
Infants and Young Children 1-52
Child Restraint Systems 1-56
Where to Put the Restraint 1-59
Top Strap 1-59
Top Strap Anchor Location 1-61
Lower Anchorages and Top Tethers for Children (LATCH System) 1-62
Securing a Child Restraint Designed for the LATCH System 1-64
Securing a Child Restraint in a Rear Seat Position 1-65
Securing a Child Restraint in the Right Front Seat Position 1-67
Built-In Child Restraint 1-69

Downloaded from www.Manualslib.com manuals search engine

Section 1 Seats and Restraint Systems

Airbag System 1-81
Where Are the Airbags? 1-84
When Should an Airbag Inflate? 1-87
What Makes an Airbag Inflate? 1-88
How Does an Airbag Restrain? 1-89
What Will You See After an Airbag Inflates? 1-89
Servicing Your Airbag-Equipped Vehicle 1-91

Restraint System Check 1-91
Checking Your Restraint Systems 1-91
Replacing Restraint System Parts After a Crash 1-92

Downloaded from www.Manualslib.com manuals search engine

Front Seats

Manual Seats

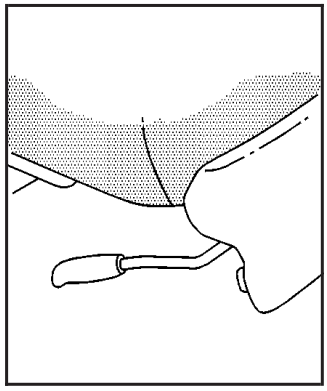

Use the lever located on the front of the seat to adjust the seat forward or rearward. Pull up the lever to unlock the seat. Slide the seat to where you want it and release the lever.

⚠ CAUTION:

You can lose control of the vehicle if you try to adjust a manual driver's seat while the vehicle is moving. The sudden movement could startle and confuse you, or make you push a pedal when you do not want to. Adjust the driver's seat only when the vehicle is not moving.

To make sure the seat is locked into place, try to move the seat back and forth with your body.

Downloaded from www.Manualslib.com manuals search engine

Six-Way Power Seats

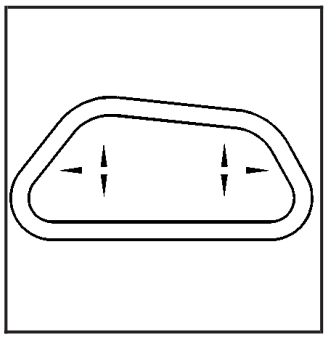

Your vehicle may have this feature. If it does, the six-way power seat control is located on the outboard sides of the driver's and front passenger's seats.

- Move the front of the control up or down to adjust the front portion of the cushion up or down.
- Move the rear of the control up or down to adjust the rear portion of the cushion up or down.
- Lift up or push down on the whole control to move the entire seat up or down.
- To move the whole seat forward or rearward, slide the control forward or rearward.

Downloaded from www.Manualslib.com manuals search engine

Heated Seats

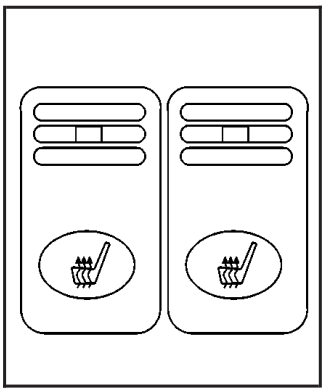

Your vehicle may have this feature. If it does, the heated seat switches are located in the instrument panel switchbank.

This feature will heat the lower cushions and lower back of the driver's and front passenger's seats for added comfort.

The left switch is for the driver's seat and the right switch is for the front passenger's seat. Press the bottom of the switch to turn the heater on. The indicator light on the switch will be lit. Press the top of the switch to turn the heater off. The heated seat switch will turn off when the ignition is turned to OFF and will resume operation when the ignition is turned to RUN, unless the switch is manually turned off.

Reclining Seatbacks

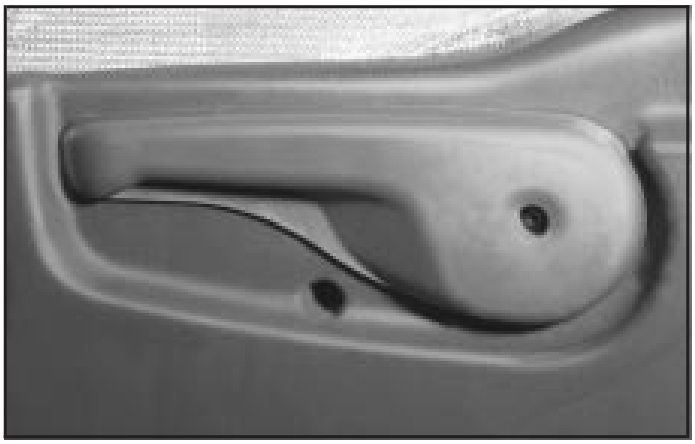

To adjust a seatback, pull up on the lever located on the outboard side of the driver's or front passenger's seats. Release the lever to lock the seatback where you want it. Push and pull on the seat to make sure it's locked into position. Pull up on the lever, and the seat will go to its original upright position.

Downloaded from www.Manualslib.com manuals search engine

But don't have a seatback reclined if your vehicle is moving.

⚠ CAUTION:

Sitting in a reclined position when your vehicle is in motion can be dangerous. Even if you buckle up, your safety belts can not do their job when you are reclined like this.

The shoulder belt can not do its job because it will not be against your body. Instead, it will be in front of you. In a crash you could go into it, receiving neck or other injuries.

The lap belt can not do its job either. In a crash the belt could go up over your abdomen. The belt forces would be there, not at your pelvic bones. This could cause serious internal injuries.

For proper protection when the vehicle is in motion, have the seatback upright. Then sit well back in the seat and wear your safety belt properly.

Downloaded from www.Manualslib.com manuals search engine

Head Restraints

Adjust your head restraint so that the top of the restraint is closest to the top of your head. This position reduces the chance of a neck injury in a crash.

Head restraints are fixed on some models and adjustable on others. To adjust a head restraint, slide it up or down.

Rear Seats

Rear Seat Operation

The rear seats in your vehicle have levers and straps used to adjust, remove, and reinstall the seats. By using the levers and straps in the correct order, you can easily remove the seats from the vehicle.

When you put the seats back in the vehicle, follow the label on the back of the seat for proper location.

Second Row Safety Belt Stowage

If your vehicle has a split bench seat in the second row, use the clip on the safety belt to secure the belt after it is disconnected from the mini-buckle. When removing the second row split bench seat, secure the loose end of the safety belt in this clip. This will keep the safety belt from dangling and possibly striking something.

Do not have the second row outside safety belt stored if someone is sitting in the second row outside position.

Downloaded from www.Manualslib.com manuals search engine

Flip and Fold Feature

The rear seats in your vehicle can be folded forward. Use this feature for exiting and entering third row seats.

1. If the seats have the adjustable head restraints, push them fully down.

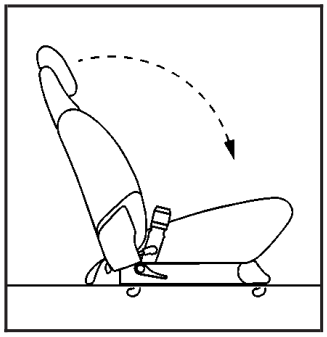

2. Fold the seatback flat on the seat, by either pulling on the nylon strap on the rear of the seat or lifting up on the lever located on the front of the seatback. If the seat adjusts, slide it all the way back.

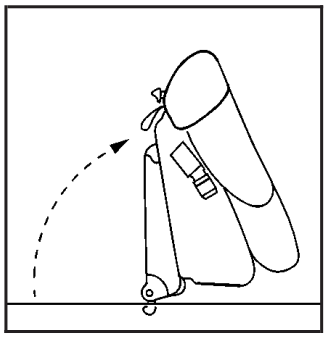

3. Release the rear set of hooks from the floor pins by pulling the nylon strap located at the base of the seat; hang on to the strap as the seat folds forward.

To return the seat(s) to the normal position, do the following:

1. Push the seat back and firmly push the rear hooks onto the rear floor pins by pushing down on the rear of the seat.
2. Try to raise the seat to check that it is locked down.
3. Lift the seatback recliner lever or pull the nylon strap on the back of the seat and raise the seatback until it locks upright.
4. Push and pull on the seatback to check that it is locked.

Split Bench Seats

If you have the split bench seat (50/50 or 40/60), the seatbacks can be folded forward or reclined individually and the seats can be removed individually. The second row (40/60) sections can also be adjusted forward or rearward individually.

The second row (40/60) split bench may be equipped with a built-in child restraint. See *Built-In Child Restraint on page 1-69*.

Downloaded from www.Manualslib.com manuals search engine

Adjusting the Split Bench Seats (Second Row)

The second row bench seats are adjustable. There are two adjustment levers on each section of the split bench seats to adjust the seat forward or rearward.

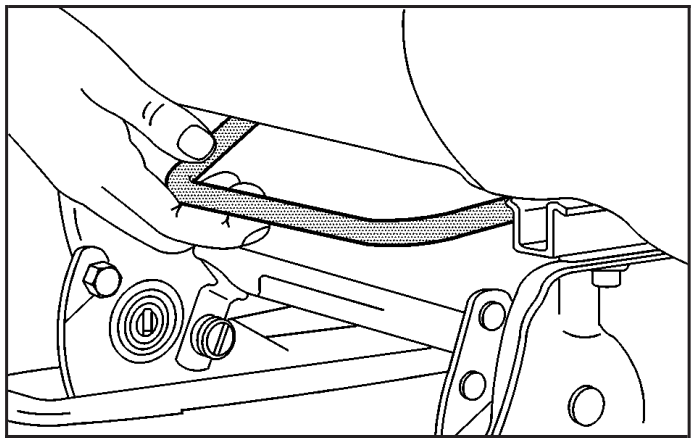

One is located below the center, in the front of each section of the split bench.

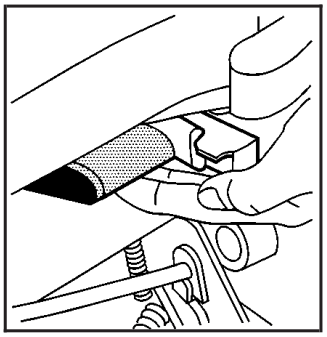

The other lever is located on the rear of the seat.

Lift up either lever and slide the seat forward or rearward. Release the lever. Push and pull on the seat to make sure it is locked into place.

Downloaded from www.Manualslib.com manuals search engine

Folding or Reclining the Seatbacks

⚠ CAUTION:

If the seatback is not locked, it could move forward in a sudden stop or crash. That could cause injury to the person sitting there. Always press rearward on the seatback to be sure it is locked.

The seatbacks on each section of the split bench seat can be either folded forward or reclined. The following explains how to use the nylon strap or recliner lever to fold or recline the seatbacks.

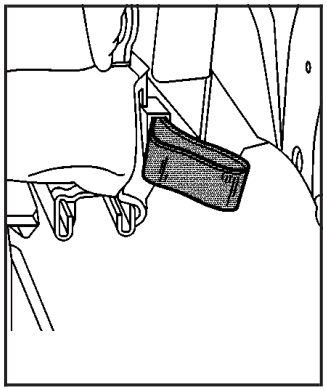

Nylon Strap

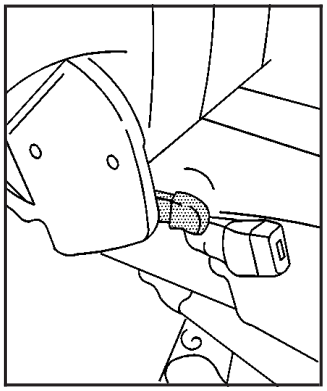

Recliner Lever

To fold the seatback forward, pull the nylon strap located on the rear of the seat or lift up on the recliner lever located on the front of the seatback. The seatback will lock into place.

Downloaded from www.Manualslib.com manuals search engine

To raise a seatback, pull the nylon strap or lift the recliner lever while raising the seatback until it locks upright. Push and pull on the seatback to check that it is locked into place.

To recline the seatback, pull the nylon strap or lift the recliner lever. Press back on the seatback until you reach the desired position then let go of the strap or lever.

To return the seatback to an upright position, pull on the nylon strap or lift the recliner lever without putting any pressure on the seatback. Push and pull on the seatback to be sure it is locked into place.

Removing the Split Bench Seat

Make sure the seatback is in the upright position.

1. For the second row split bench, with the seatback in the upright position, unhook the side attachment for the safety belt. This mini-buckle is located on the right side of the seat.

2. Push the red center of the buckle with a small pointed object to remove the seat belt, if needed.
3. Lift the seatback recliner lever or pull the nylon strap on the back of the seat to fold the seatback forward.
4. If the seat is in the second row, lift one of the adjustment levers and slide the seat fully rearward.

Downloaded from www.Manualslib.com manuals search engine

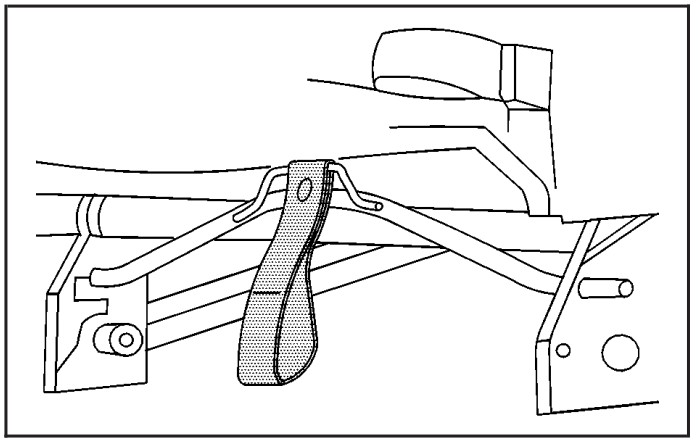

5. From behind the bench seat, pull the nylon strap at the center of the base of the seat to release the rear latches from the floor pins.

   Do not let go of the strap until the seat is folded all the way forward.

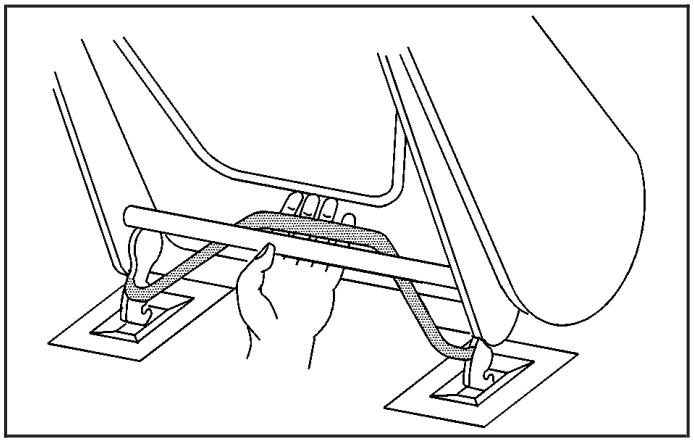

6. To unlatch the front latches, squeeze the angled bar toward the straight crossbar.
7. Remove the seat by rocking it slightly forward, then toward the rear of the vehicle and then pulling it out.

Repeat these steps for the other section of the split bench seat.

Downloaded from www.Manualslib.com manuals search engine

Replacing the Split Bench Seats

⚠ CAUTION:

If the seatback is not locked, it could move forward in a sudden stop or crash. That could cause injury to the person sitting there. Always press rearward on the seatback to be sure it is locked.

⚠ CAUTION:

A seat that is not locked into place properly can move around in a collision or sudden stop. People in the vehicle could be injured. Be sure to lock the seat into place properly when installing it.

⚠ CAUTION:

A safety belt that is improperly routed, not properly attached, or twisted will not provide the protection needed in a crash. The person wearing the belt could be seriously injured. After installing the seat, always check to be sure that the safety belts are properly routed and attached, and are not twisted.

Make sure the seatback is in the upright position and the safety belts are on the correct section of the seat.

Don't put the sections of the bench seat in so they face rearward because they won't latch that way. If you want more storage room behind the second row seat, adjust each section by sliding it forward.

The split bench seats have seat position labels, located on the back of each seat, showing where the seat must go. Follow that diagram.

The seat must be placed in the proper location for the legs to attach correctly.

Make sure the seat is in the full rear position before beginning this procedure.

Downloaded from www.Manualslib.com manuals search engine

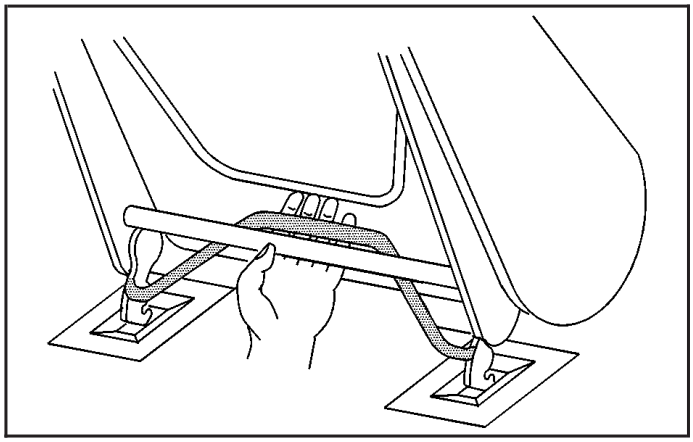

1. Squeeze the angled bar toward the solid crossbar while placing the front hooks of the bench seat onto the front two floor pins.

2. Make sure the bench seat is angled so that the front hooks clear the floor pins.

If the front legs are not attached correctly, the rear legs will not attach to the rear set of floor pins.

Downloaded from www.Manualslib.com manuals search engine

If the front latches are not attaching correctly, check that the seat is in the full rear position.

3. Firmly push the rear hooks onto the rear floor pins by pushing down on the rear of the seat.
4. Try to raise the seat to check that it is locked down.
5. Lift the seatback recliner lever or pull the nylon strap on the back of the seat and raise the seatback until it locks upright.
6. Push and pull on the seatback to check that it is locked.
7. If you have the 40/60 seat, attach the mini-buckle so that the safety belt is ready for use when a passenger uses the seat.

   The buckle reattaches by pushing the latch into the buckle until the red center pops out again.

Repeat these steps for the other section of the split bench seat.

Downloaded from www.Manualslib.com manuals search engine

Bucket Seats

If your vehicle has the bucket seats, the seatbacks can be folded down or reclined. The seats can also be adjusted forward or rearward and removed.

One of the bucket seats may be equipped with a built-in child restraint. See *Built-In Child Restraint on page 1-69*.

Adjusting the Bucket Seats

There are two adjustment levers on each seat to adjust the seat forward or rearward.

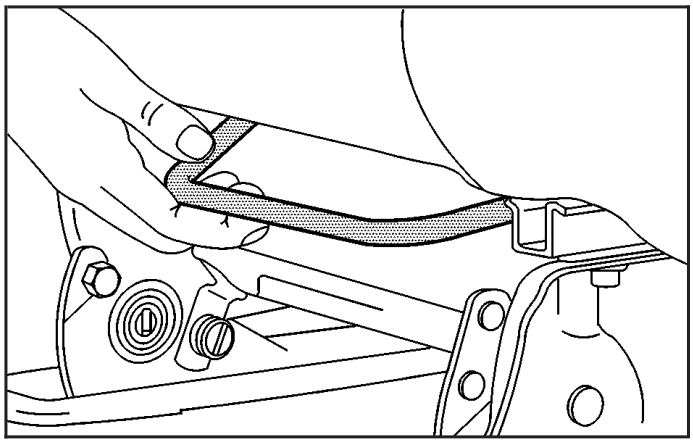

One is located below the center, in front of the bucket seats.

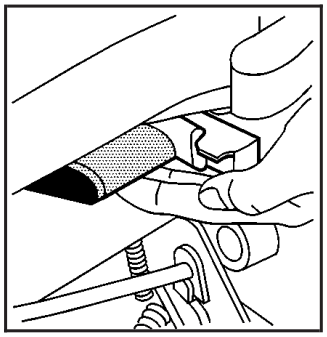

The other lever is located on the rear of the bucket seat.

Lift up either lever and slide the seat forward or rearward.

Release the lever. Push and pull on the seat to make sure it is locked into place.

Downloaded from www.Manualslib.com manuals search engine

Folding or Reclining the Seatbacks

⚠ CAUTION:

If the seatback is not locked, it could move forward in a sudden stop or crash. That could cause injury to the person sitting there. Always press rearward on the seatback to be sure it is locked.

The seatback on a bucket seat can be either folded forward or reclined. The following explains how to use either the nylon strap or the lever to fold or recline the seatback.

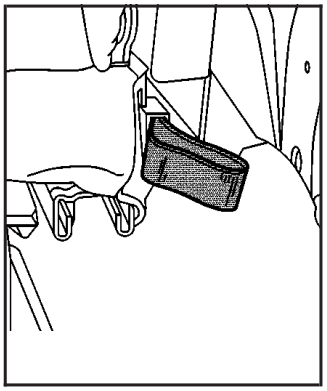

Nylon Strap

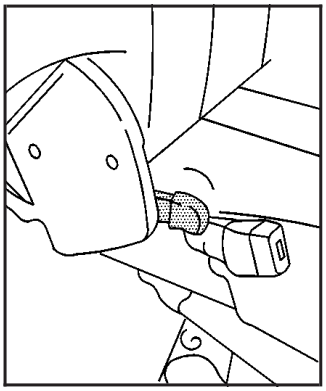

Recliner Lever

To fold the seatback forward, pull the nylon strap located on the rear of the seat or lift up on the recliner lever located on the front of the seatback. The seatback will lock into place.

To raise a seatback, pull the nylon strap or lift the recliner lever while raising the seatback until it locks upright. Push and pull on the seatback to check that it is locked into place.

Downloaded from www.Manualslib.com manuals search engine

To recline the seatback, pull the nylon strap or lift the recliner lever. Press back on the seatback until you reach the desired position, then let go of the strap or lever.

To return the seatback to an upright position, pull on the nylon strap or lift the recliner lever without putting any pressure on the seatback. Push and pull on the seatback to be sure it is locked into place.

Removing the Bucket Seats

Make sure the seatback is in the upright position. The head restraints should be fully down.

1. Lift the seatback recliner lever or pull the nylon strap on the back of the seat to fold the seatback forward.
2. Slide the seat all the way back by lifting either one of the adjuster levers and sliding the seat fully rearward.

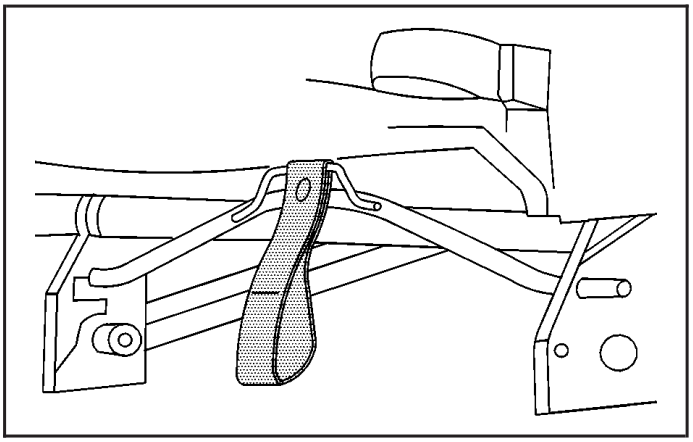

3. From behind the seat, pull the nylon strap, located at the base of the seat, to release the rear latches from the floor pins.

Downloaded from www.Manualslib.com manuals search engine

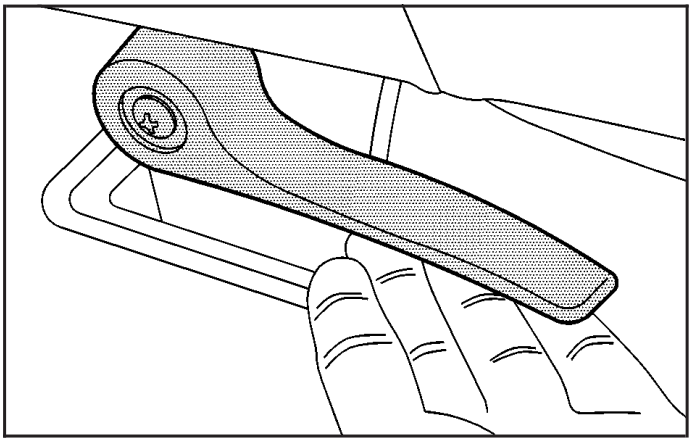

You can also lift the lever on the side of the seat to release the rear latches from the floor pins.

Do not let go of the strap or lever until the seat is folded all the way forward.

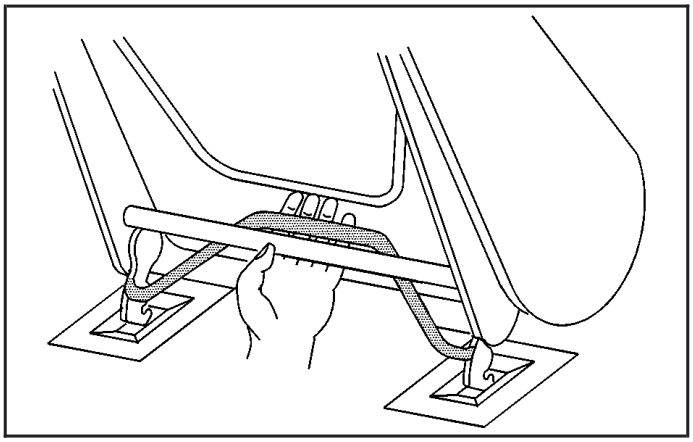

4. To unlatch the front latches, with the seat folded forward, squeeze the angled bar toward the straight crossbar.
5. Remove the seat by rocking it slightly forward, then toward the rear of the vehicle and then pulling it out. This should be done in one motion.

Downloaded from www.Manualslib.com manuals search engine

Replacing the Bucket Seats

⚠ CAUTION:

If the seatback is not locked, it could move forward in a sudden stop or crash. That could cause injury to the person sitting there. Always press rearward on the seatback to be sure it is locked.

⚠ CAUTION:

A seat that is not locked into place properly can move around in a collision or sudden stop. People in the vehicle could be injured. Be sure to lock the seat into place properly when installing it.

⚠ CAUTION:

A safety belt that is improperly routed, not properly attached, or twisted will not provide the protection needed in a crash. The person wearing the belt could be seriously injured. After installing the seat, always check to be sure that the safety belts are properly routed and attached, and are not twisted.

Don't put the seats in so they face rearward because they won't latch that way. If you want more storage room behind the seat, adjust the seat by sliding it forward.

The bucket seats have seat position labels, located on the back of the seat, showing where the seat must go. Follow that diagram. The seat must be placed in the proper location for the legs to attach correctly.

Downloaded from www.Manualslib.com manuals search engine

Make sure the seats are in the full rear position before beginning this procedure.

1. With the seat folded, squeeze the angled bar toward the straight crossbar while placing the front hooks of the bucket seat onto the front two floor pins.

2. Make sure the bucket seat is angled so that the front hooks clear the floor pins.

If the front legs are not attached correctly, the rear legs will not attach to the rear set of floor pins.

If the front latches are not attaching correctly, check that the seat is in the full rear position.

3. Firmly push the rear hooks onto the rear floor pins by pushing down the rear of the seat.
4. Try to raise the seat to check that it is locked down.
5. Lift the seatback recliner lever or pull the nylon strap on the back of the seat and raise the seatback until it locks upright.
6. Push and pull on the seatback to make sure that it is locked in place.

Downloaded from www.Manualslib.com manuals search engine

Captain Chairs

If your vehicle has captain's chairs, the chairs and seatbacks can be adjusted forward or rearward.

Adjusting the Captain's Chairs (Second Row)

The second row captain's chairs can be adjusted forward or rearward.

There are two adjustment levers on each seat. One is located below the center, in front of the seat. The other is located across the rear of the seat.

Lift up either lever to slide the seat forward or rearward. Release the lever. Push and pull on the seat to make sure it is locked into place.

Folding or Reclining the Seatbacks

⚠ CAUTION:

If the seatback is not locked, it could move forward in a sudden stop or crash. That could cause injury to the person sitting there. Always press rearward on the seatback to be sure it is locked.

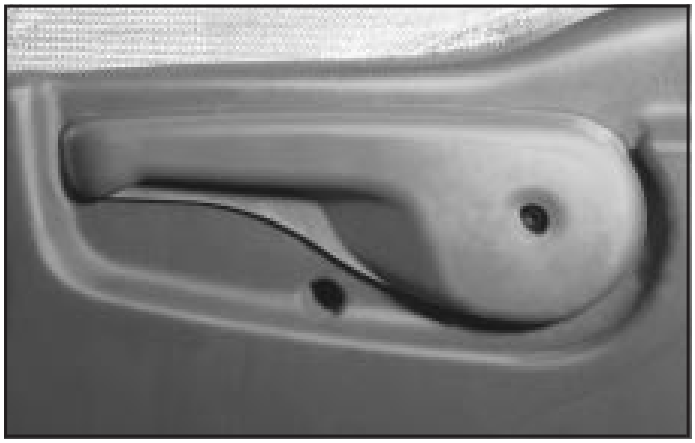

To recline the seatback, lift up on the recliner lever, located on the outboard side of the seat. Use the recliner lever to move the seatback to the desired position.

It is easier to raise or lower the seatback if you lean forward, taking the weight off the seatback.

The seatbacks on the second row captain's chairs also fold forward to put items behind the left and right seats.

Lift up on the recliner lever and fold the seatback forward. The seatback will lock into place when you push it back to the upright position.

The armrests can be lowered or raised for entering or exiting the vehicle.

Downloaded from www.Manualslib.com manuals search engine

Removing the Captain's Chairs

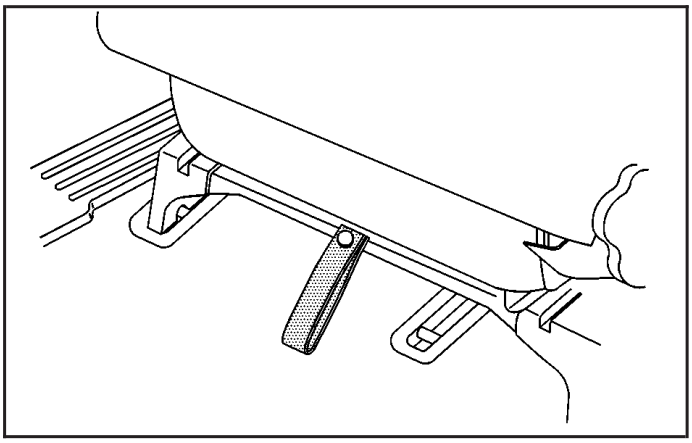

1. Pull the nylon strap behind the chair to release the rear hooks from the floor pins.

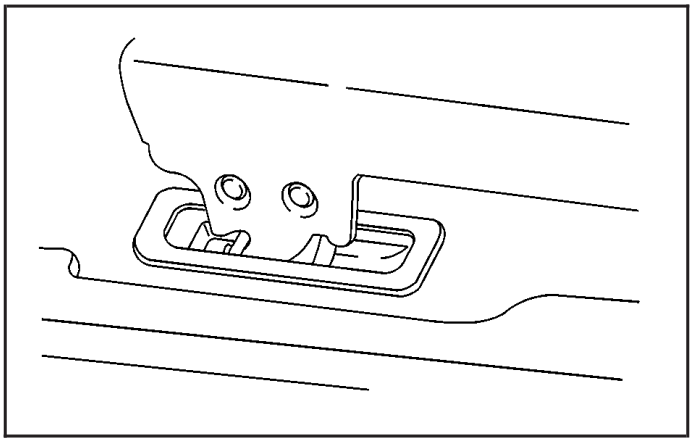

2. The seat can then be lifted off the front floor pins and removed from the vehicle.

Downloaded from www.Manualslib.com manuals search engine

Replacing the Captain's Chairs

⚠ CAUTION:

If the seatback is not locked, it could move forward in a sudden stop or crash. That could cause injury to the person sitting there. Always press rearward on the seatback to be sure it is locked.

⚠ CAUTION:

A seat that is not locked into place properly can move around in a collision or sudden stop. People in the vehicle could be injured. Be sure to lock the seat into place properly when installing it.

⚠ CAUTION:

A safety belt that is improperly routed, not properly attached, or twisted will not provide the protection needed in a crash. The person wearing the belt could be seriously injured. After installing the seat, always check to be sure that the safety belts are properly routed and attached, and are not twisted.

Don't put the seats in so they face rearward because they won't latch that way. For the second row, if you want more storage room behind the seat, adjust the seat by sliding it forward.

The captain's chairs have seat position labels, located on the back of the seat, showing where the seat must go. Follow that diagram. The seat must be placed in the proper location for the legs to attach correctly.

Downloaded from www.Manualslib.com manuals search engine

Make sure the seatbacks are in the upright position, the seat belts are on the correct side of the chairs and the second row captain's chairs are in the full rear position before beginning this procedure.

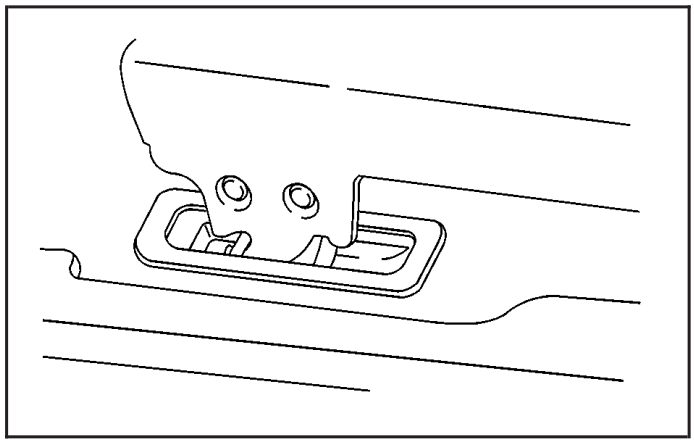

1. Hook the front latches over the front floor pins.

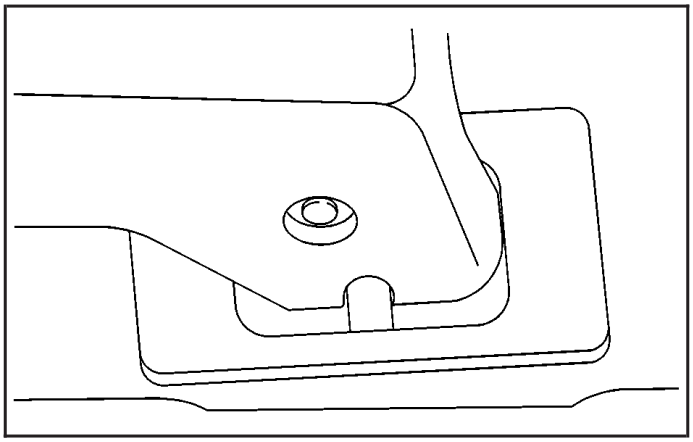

2. Push the rear of the seat down to lock the rear latches onto the rear set of floor pins.
3. Push and pull on the seat to be sure it is properly attached.

Downloaded from www.Manualslib.com manuals search engine

Stowable Seat

Your vehicle may have a stowable seat. The stowable seat is a full bench seat and comes with the convenience center. See *Convenience Center on page 2-54* for more information. The stowable seat can be removed and replaced, or with the seatback folded, it can lie flush with the convenience center.

Folding the Seatback

⚠ CAUTION:

If the seatback is not locked, it could move forward in a sudden stop or crash. That could cause injury to the person sitting there. Always press rearward on the seatback to be sure it is locked.

To fold down the seatback, pull up on the lever located on the back of the seat, and push the seatback down until it is locked into place.

Push and pull on the seatback to make sure that it is locked into place.

To raise the seatback, do one of the following:

- From the rear of the vehicle, pull up on the lever to release the seatback, then pull the strap located on the right side of the seat, to pull the seatback up. The seatback has a patch of hook and loop fastener to stow the strap on the rear of the seat when not in use.
- From the passenger's side sliding door, pull up on the lever to release the seatback, then push up on the seatback to raise the seat.

Push and pull on the seatback to make sure that it is locked into the upright position.

Downloaded from www.Manualslib.com manuals search engine

Removing the Stowable Seat

1. Remove the convenience center, if it is in the vehicle. See *Convenience Center on page 2-54* for more information.
2. Make sure all items are off of the stowable seat.
3. If the seatback is down, put the seatback in its upright position before removing the seat. See “Folding the Seatback” previously in this section.

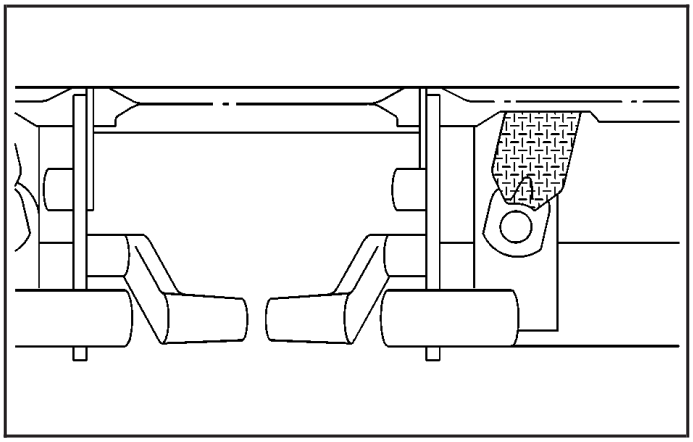

4. From behind the bench seat, push up the release handles at the base of the seat to release the latches from the floor pins.
5. While holding onto the crossbar at the bottom of the seat, remove the seat by rocking it slightly toward the rear of the vehicle and then pulling it out. This should be done in one motion.

Notice: **If you use the release handles to remove the seat, the handles could break, and the repairs would not be covered by your warranty. Use the crossbar located at the seat bottom to remove the seat.**

Downloaded from www.Manualslib.com manuals search engine

Replacing the Stowable Seat

⚠ CAUTION:

If the seatback is not locked, it could move forward in a sudden stop or crash. That could cause injury to the person sitting there. Always press rearward on the seatback to be sure it is locked.

⚠ CAUTION:

A seat that is not locked into place properly can move around in a collision or sudden stop. People in the vehicle could be injured. Be sure to lock the seat into place properly when installing it.

⚠ CAUTION:

A safety belt that is improperly routed, not properly attached, or twisted will not provide the protection needed in a crash. The person wearing the belt could be seriously injured. After installing the seat, always check to be sure that the safety belts are properly routed and attached, and are not twisted.

Downloaded from www.Manualslib.com manuals search engine

Do not put the stowable seat in so it faces rearward because it will not latch that way. The stowable seat has to go in before the convenience center. See *Convenience Center on page 2-54* for more information.

The stowable seat has seat position labels, located on the back of the seat, showing where the seat must go. Follow the floor pin diagram. Use the front floor pins of the floor cups and the rear floor cups in the third row.

The seat must be placed in the proper location for the legs to attach correctly.

Make sure the seat is in its upright position before beginning this procedure.

1. Place the front hooks of the seat onto the front floor pins in the third row. To do this, the seat will need to be angled so the front hooks clear the floor pins.

   If the front legs are not attached correctly, the rear legs will not attach to the rear set of floor pins.

2. Firmly push the rear hooks into the rear floor pins by pushing down on the rear of the seat.
3. Try to raise the seat to make sure that it is locked down.
4. Push and pull on the seatback to make sure that it is locked into place.

Downloaded from www.Manualslib.com manuals search engine

Safety Belts

Safety Belts: They Are for Everyone

This part of the manual tells you how to use safety belts properly. It tells you some things you should not do with safety belts.

⚠ CAUTION:

Do not let anyone ride where he or she can not wear a safety belt properly. If you are in a crash and you are not wearing a safety belt, your injuries can be much worse. You can hit things inside the vehicle or be ejected from it. You can be seriously injured or killed. In the same crash, you might not be, if you are buckled up. Always fasten your safety belt, and check that your passengers' belts are fastened properly too.

⚠ CAUTION:

It is extremely dangerous to ride in a cargo area, inside or outside of a vehicle. In a collision, people riding in these areas are more likely to be seriously injured or killed. Do not allow people to ride in any area of your vehicle that is not equipped with seats and safety belts. Be sure everyone in your vehicle is in a seat and using a safety belt properly.

Your vehicle has a light that comes on as a reminder to buckle up. See *Safety Belt Reminder Light on page 3-38*.

In most states and in all Canadian provinces, the law says to wear safety belts. Here's why: *They work*.

Downloaded from www.Manualslib.com manuals search engine

You never know if you'll be in a crash. If you do have a crash, you don't know if it will be a bad one.

A few crashes are mild, and some crashes can be so serious that even buckled up a person wouldn't survive. But most crashes are in between. In many of them, people who buckle up can survive and sometimes walk away. Without belts they could have been badly hurt or killed.

After more than 30 years of safety belts in vehicles, the facts are clear. In most crashes buckling up does matter... a lot!

Why Safety Belts Work

When you ride in or on anything, you go as fast as it goes.

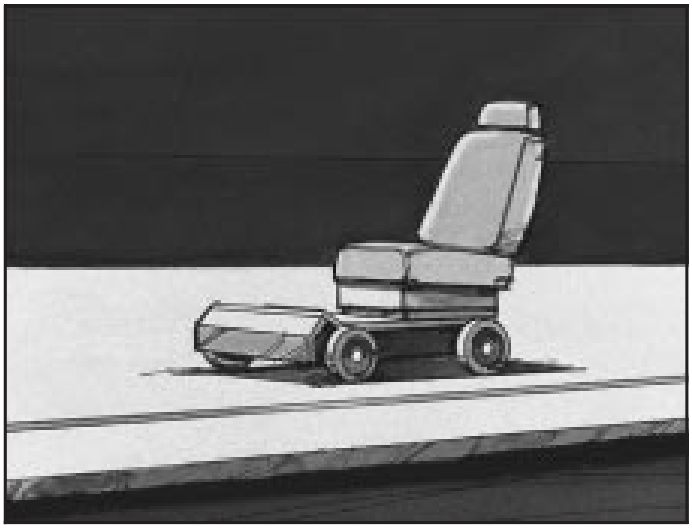

Take the simplest vehicle. Suppose it's just a seat on wheels.

Downloaded from www.Manualslib.com manuals search engine

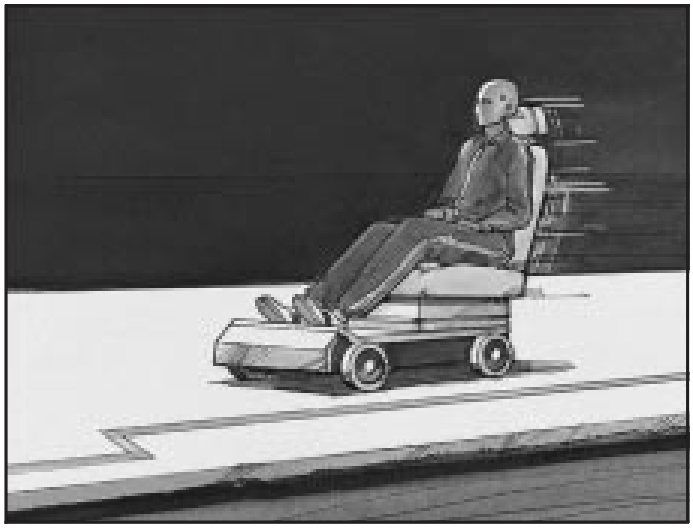

Put someone on it.

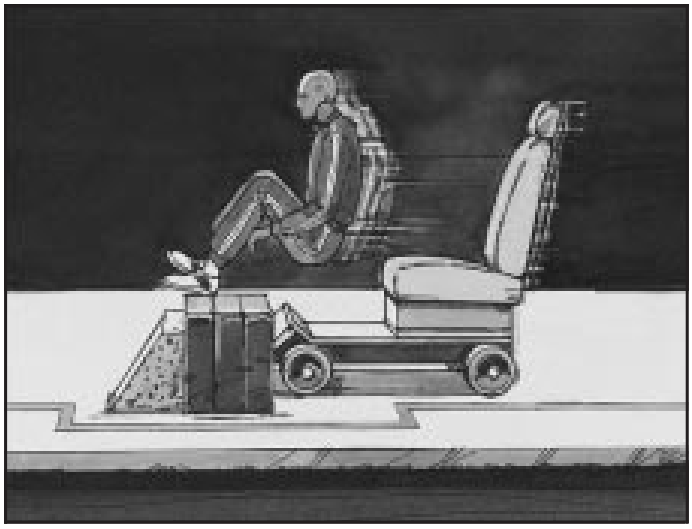

Get it up to speed. Then stop the vehicle. The rider doesn't stop.

Downloaded from www.Manualslib.com manuals search engine

The person keeps going until stopped by something. In a real vehicle, it could be the windshield...

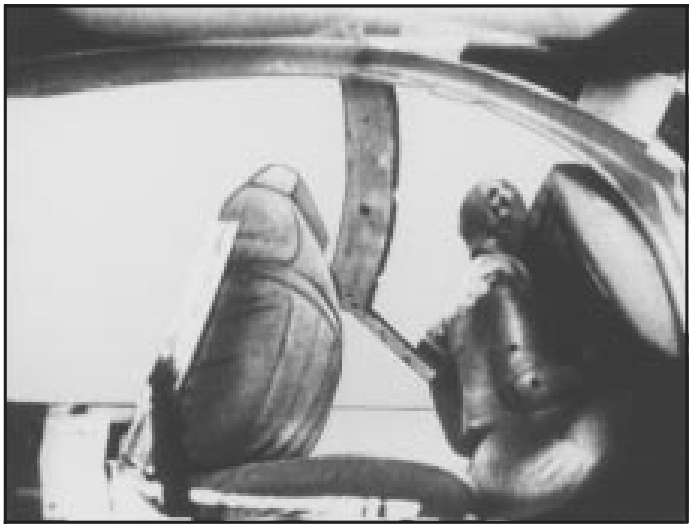

or the instrument panel...

Downloaded from www.Manualslib.com manuals search engine

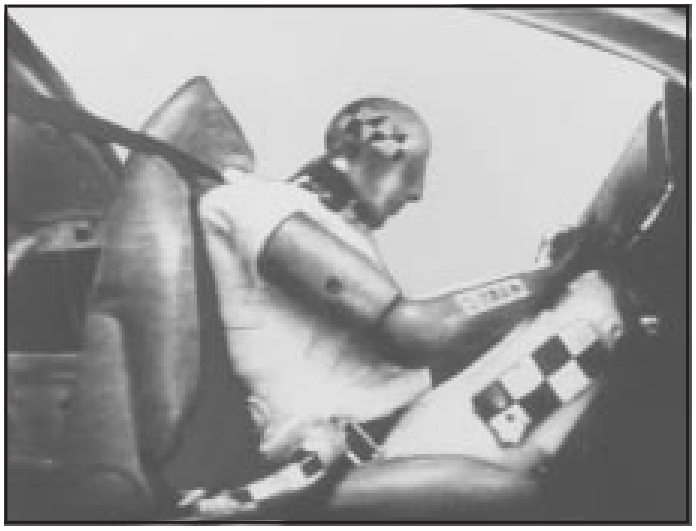

or the safety belts!

With safety belts, you slow down as the vehicle does. You get more time to stop. You stop over more distance, and your strongest bones take the forces. That's why safety belts make such good sense.

Questions and Answers About Safety Belts

Q: Will I be trapped in the vehicle after an accident if I am wearing a safety belt?

A: You *could* be — whether you are wearing a safety belt or not. But you can unbuckle a safety belt, even if you are upside down. And your chance of being conscious during and after an accident, so you *can* unbuckle and get out, is *much* greater if you are belted.

Q: If my vehicle has airbags, why should I have to wear safety belts?

A: Airbags are in many vehicles today and will be in most of them in the future. But they are supplemental systems only; so they work *with* safety belts — not instead of them. Every airbag system ever offered for sale has required the use of safety belts. Even if you are in a vehicle that has airbags, you still have to buckle up to get the most protection. That is true not only in frontal collisions, but especially in side and other collisions.

Downloaded from www.Manualslib.com manuals search engine

Q: If I am a good driver, and I never drive far from home, why should I wear safety belts?

A: You may be an excellent driver, but if you are in an accident — even one that is not your fault — you and your passengers can be hurt. Being a good driver does not protect you from things beyond your control, such as bad drivers.

Most accidents occur within 25 miles (40 km) of home. And the greatest number of serious injuries and deaths occur at speeds of less than 40 mph (65 km/h).

Safety belts are for everyone.

How to Wear Safety Belts Properly

This part is only for people of adult size.

Be aware that there are special things to know about safety belts and children. And there are different rules for smaller children and babies. If a child will be riding in your vehicle, see *Older Children on page 1-50* or *Infants and Young Children on page 1-52*. Follow those rules for everyone's protection.

First, you will want to know which restraint systems your vehicle has.

We will start with the driver position.

Downloaded from www.Manualslib.com manuals search engine

Driver Position

Lap-Shoulder Belt

The driver has a lap-shoulder belt. Here is how to wear it properly.

1. Close and lock the door.
2. Adjust the seat so you can sit up straight. To see how, see “Seats” in the Index.

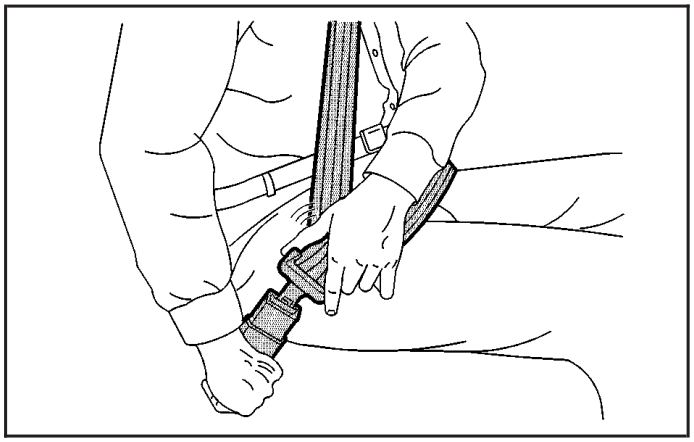

3. Pick up the latch plate and pull the belt across you. Do not let it get twisted.

   The shoulder belt may lock if you pull the belt across you very quickly. If this happens, let the belt go back slightly to unlock it. Then pull the belt across you more slowly.

Downloaded from www.Manualslib.com manuals search engine

4. Push the latch plate into the buckle until it clicks.

   Pull up on the latch plate to make sure it is secure. If the belt is not long enough, see *Safety Belt Extender on page 1-49*.

   Make sure the release button on the buckle is positioned so you would be able to unbuckle the safety belt quickly if you ever had to.

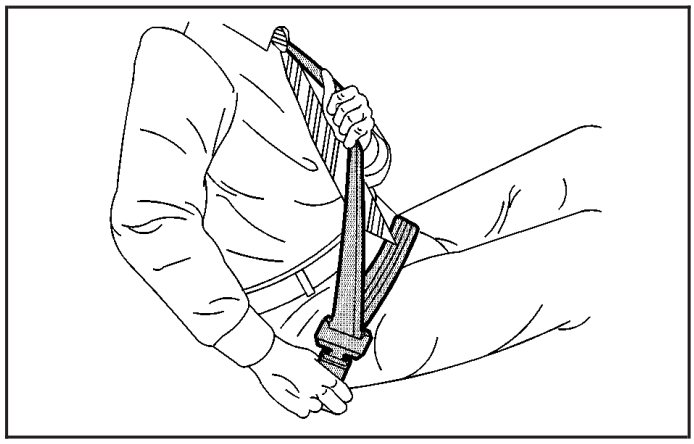

5. To make the lap part tight, pull down on the buckle end of the belt as you pull up on the shoulder belt.

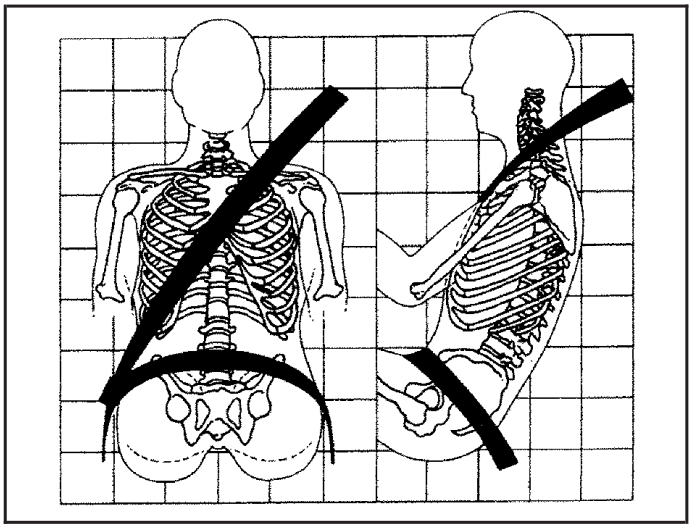

The lap part of the belt should be worn low and snug on the hips, just touching the thighs. In a crash, this applies force to the strong pelvic bones. And you would be less likely to slide under the lap belt. If you slid under it, the belt would apply force at your abdomen. This could cause serious or even fatal injuries. The shoulder belt should go over the shoulder and across the chest. These parts of the body are best able to take belt restraining forces.

The safety belt locks if there is a sudden stop or crash, or if you pull the belt very quickly out of the retractor.

Downloaded from www.Manualslib.com manuals search engine

Q: **What is wrong with this?**

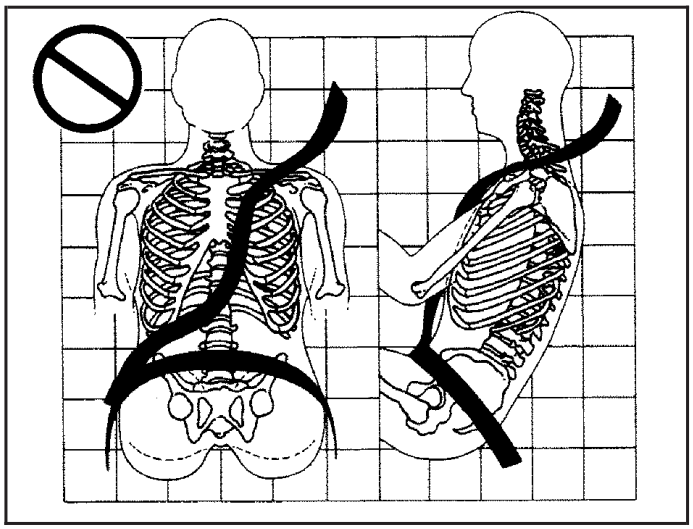

A: The shoulder belt is too loose. It will not give nearly as much protection this way.

⚠ CAUTION:

You can be seriously hurt if your shoulder belt is too loose. In a crash, you would move forward too much, which could increase injury. The shoulder belt should fit against your body.

Downloaded from www.Manualslib.com manuals search engine

Q: What is wrong with this?

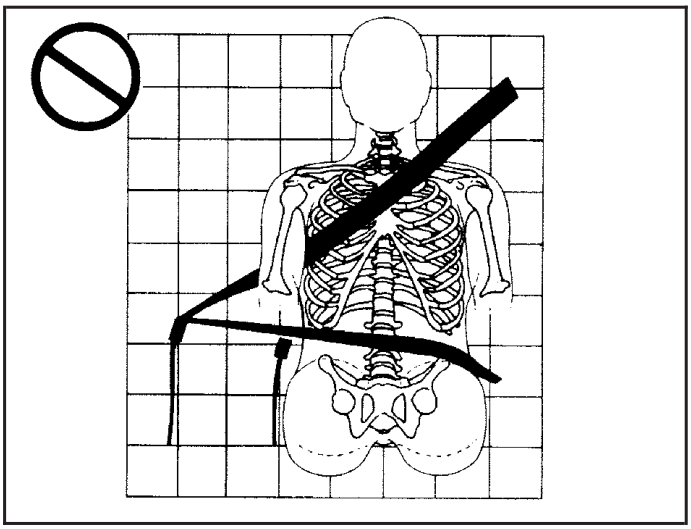

A: The belt is buckled in the wrong place.

⚠ CAUTION:

You can be seriously injured if your belt is buckled in the wrong place like this. In a crash, the belt would go up over your abdomen. The belt forces would be there, not at the pelvic bones. This could cause serious internal injuries. Always buckle your belt into the buckle nearest you.

Downloaded from www.Manualslib.com manuals search engine

Q: **What is wrong with this?**

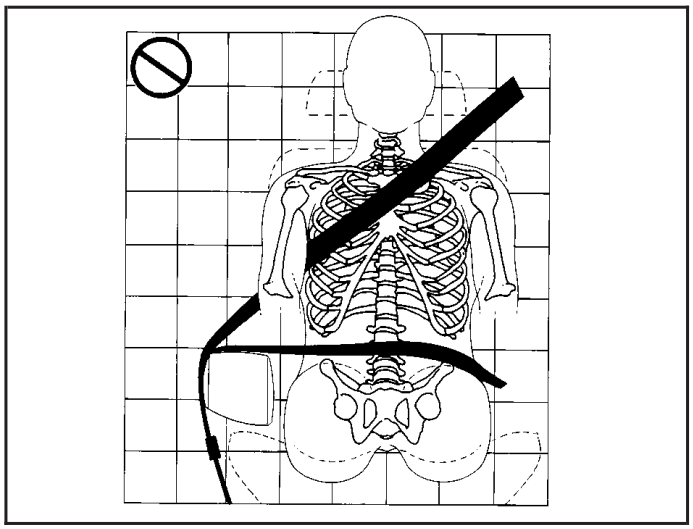

A: The belt is over an armrest.

⚠ CAUTION:

You can be seriously injured if your belt goes over an armrest like this. The belt would be much too high. In a crash, you can slide under the belt. The belt force would then be applied at the abdomen, not at the pelvic bones, and that could cause serious or fatal injuries. Be sure the belt goes under the armrests.

Downloaded from www.Manualslib.com manuals search engine

Q: What is wrong with this?

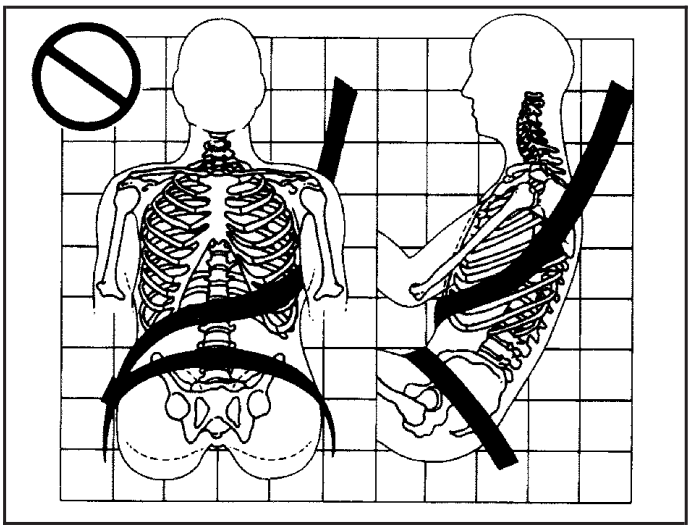

A: The shoulder belt is worn under the arm. It should be worn over the shoulder at all times.

⚠ CAUTION:

You can be seriously injured if you wear the shoulder belt under your arm. In a crash, your body would move too far forward, which would increase the chance of head and neck injury. Also, the belt would apply too much force to the ribs, which are not as strong as shoulder bones. You could also severely injure internal organs like your liver or spleen.

Downloaded from www.Manualslib.com manuals search engine

Q: **What is wrong with this?**

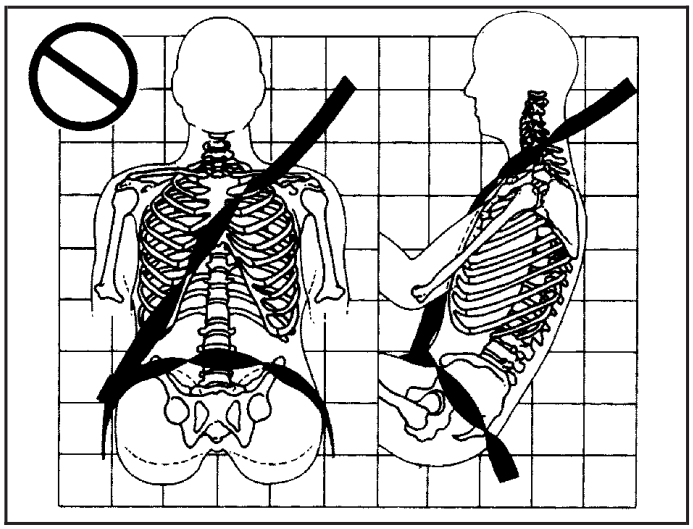

A: The belt is twisted across the body.

⚠ CAUTION:

You can be seriously injured by a twisted belt. In a crash, you would not have the full width of the belt to spread impact forces. If a belt is twisted, make it straight so it can work properly, or ask your dealer to fix it.

Downloaded from www.Manualslib.com manuals search engine

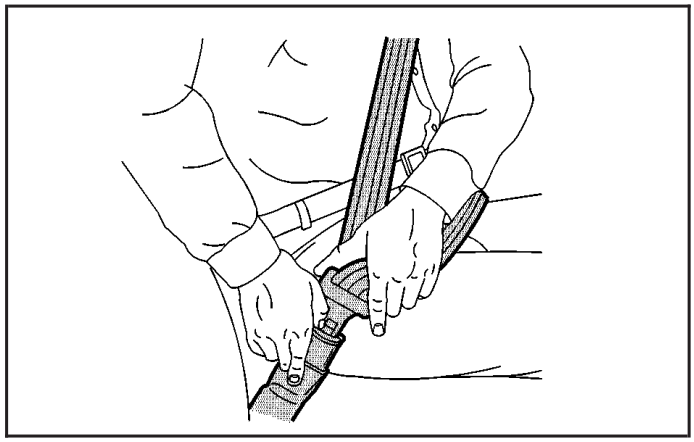

To unlatch the belt, just push the button on the buckle. The belt should go back out of the way.

Before you close the door, be sure the belt is out of the way. If you slam the door on it, you can damage both the belt and your vehicle.

Shoulder Belt Height Adjustment

Before you begin to drive, move the shoulder belt adjuster to the height that is right for you.

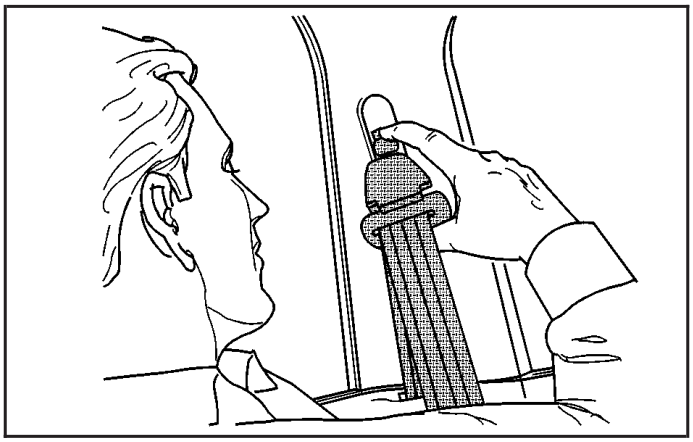

To move it down, push down on the button and move the height adjuster to the desired position. You can move the adjuster up just by pushing up on the shoulder belt guide. After you move the adjuster to where you want it, try to move it down without pushing the button down to make sure it has locked into position.

Adjust the height so that the shoulder portion of the belt is centered on your shoulder. The belt should be away from your face and neck, but not falling off your shoulder.

Downloaded from www.Manualslib.com manuals search engine

Safety Belt Use During Pregnancy

Safety belts work for everyone, including pregnant women. Like all occupants, they are more likely to be seriously injured if they do not wear safety belts.

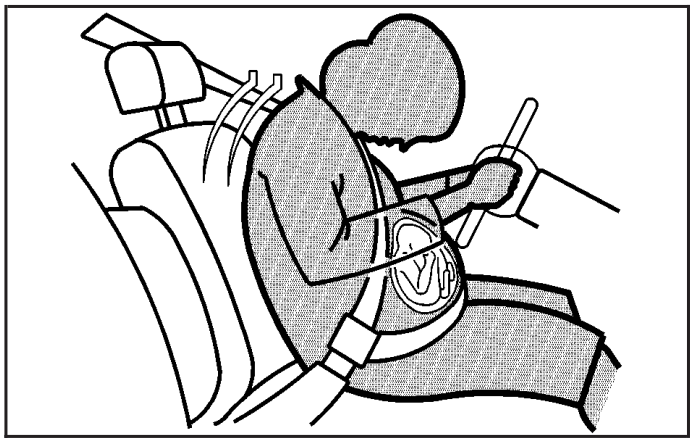

A pregnant woman should wear a lap-shoulder belt, and the lap portion should be worn as low as possible, below the rounding, throughout the pregnancy.

The best way to protect the fetus is to protect the mother. When a safety belt is worn properly, it is more likely that the fetus will not be hurt in a crash. For pregnant women, as for anyone, the key to making safety belts effective is wearing them properly.

Right Front Passenger Position

To learn how to wear the right front passenger's safety belt properly, see *Driver Position on page 1-36*.

The right front passenger's safety belt works the same way as the driver's safety belt — except for one thing. If you ever pull the shoulder portion of the belt out all the way, you will engage the child restraint locking feature. If this happens, just let the belt go back all the way and start again.

Rear Seat Passengers

It is very important for rear seat passengers to buckle up! Accident statistics show that unbelted people in the rear seat are hurt more often in crashes than those who are wearing safety belts.

Rear passengers who are not safety belted can be thrown out of the vehicle in a crash. And they can strike others in the vehicle who are wearing safety belts.

Downloaded from www.Manualslib.com manuals search engine

Lap-Shoulder Belt

All rear seating positions have lap-shoulder belts. Here is how to wear one properly.

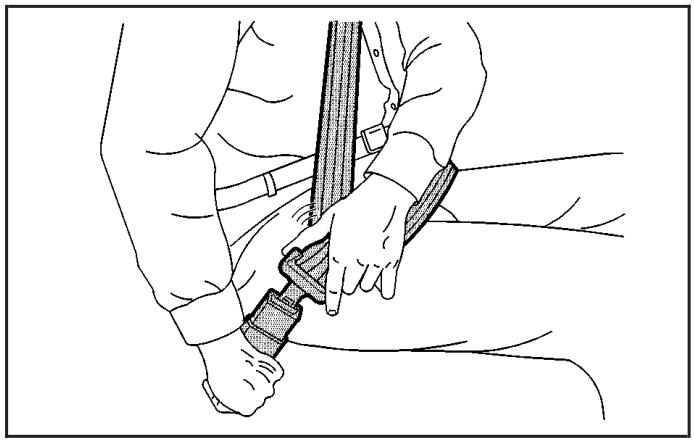

1. Pick up the latch plate and pull the belt across you. Do not let it get twisted.

   The shoulder belt may lock if you pull the belt across you very quickly. If this happens, let the belt go back slightly to unlock it. Then pull the belt across you more slowly.

2. Push the latch plate into the buckle until it clicks.

   Pull up on the latch plate to make sure it is secure.

   When the shoulder belt is pulled out all the way, it will lock. If it does, let it go back all the way and start again.

   If the belt is not long enough, see *Safety Belt Extender on page 1-49*.

   Make sure the release button on the buckle is positioned so you would be able to unbuckle the safety belt quickly if you ever had to.

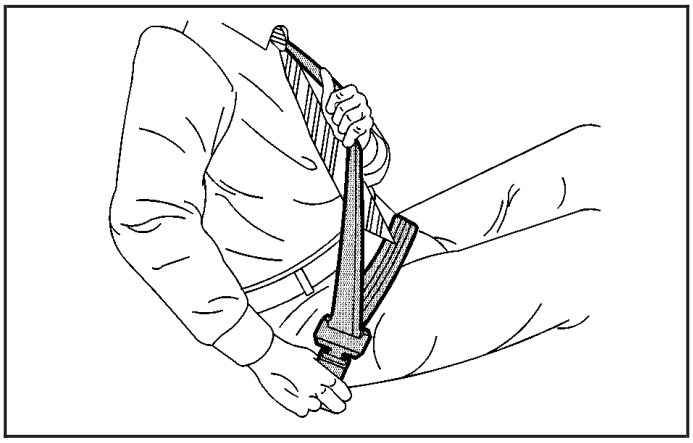

3. To make the lap part tight, pull down on the buckle end of the belt as you pull up on the shoulder part.

Downloaded from www.Manualslib.com manuals search engine

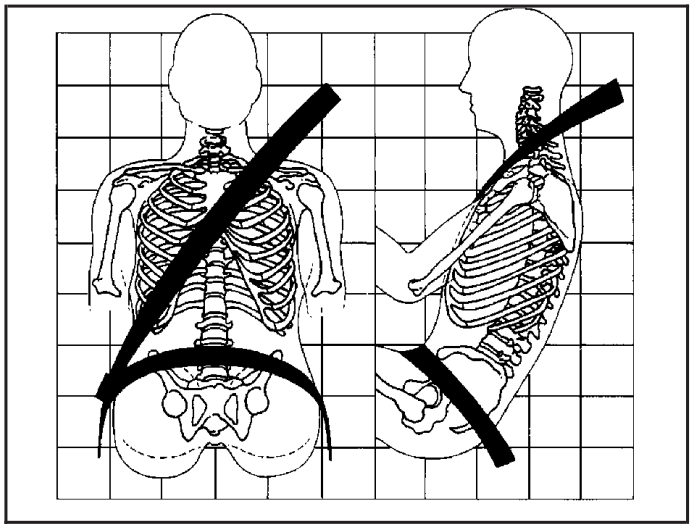

The lap part of the belt should be worn low and snug on the hips, just touching the thighs. In a crash this applies force to the strong pelvic bones. And you would be less likely to slide under the lap belt. If you slid under it, the belt would apply force at your abdomen. This could cause serious or even fatal injuries. The shoulder belt should go over the shoulder and across the chest. These parts of the body are best able to take belt restraining forces.

The safety belt locks if there is a sudden stop or a crash, or if you pull the belt very quickly out of the retractor.

⚠ CAUTION:

You can be seriously hurt if your shoulder belt is too loose. In a crash, you would move forward too much, which could increase injury. The shoulder belt should fit against your body.

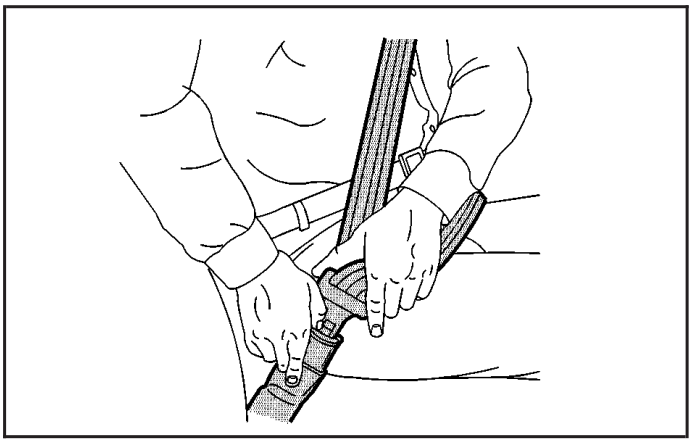

To unlatch the belt, just push the button on the buckle.

Downloaded from www.Manualslib.com manuals search engine

Rear Safety Belt Comfort Guides for Children and Small Adults

Rear safety belt comfort guides will provide added safety belt comfort for older children who have outgrown booster seats and for small adults. When installed on a shoulder belt, the comfort guide better positions the belt away from the neck and head.

If your vehicle has bucket seats in the second row, there is one guide for each second row position. To provide added safety belt comfort for children who have outgrown child restraints and booster seats and for smaller adults, the comfort guides may be installed on the shoulder belts. Here is how to install a comfort guide and use the safety belt:

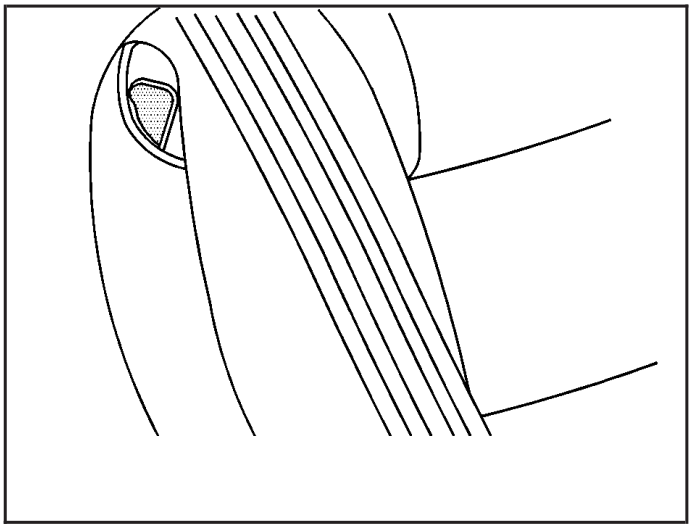

1. Remove the guide from its storage pocket on the side of the seatback.

Downloaded from www.Manualslib.com manuals search engine

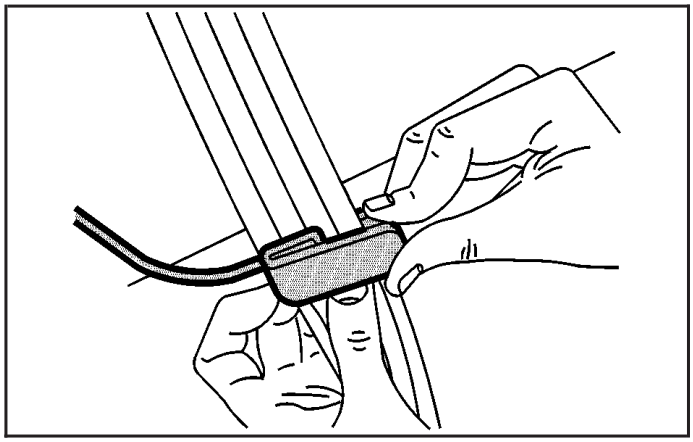

2. Place the guide over the belt and insert the two edges of the belt into the slots of the guide.

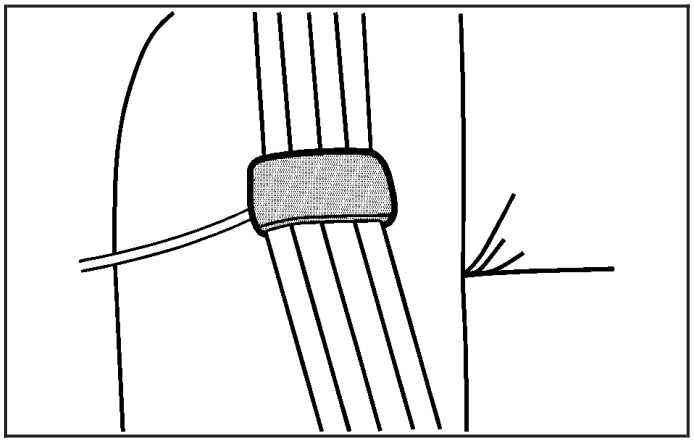

3. Be sure that the belt is not twisted and it lies flat. The guide must be on top of the belt.

Downloaded from www.Manualslib.com manuals search engine

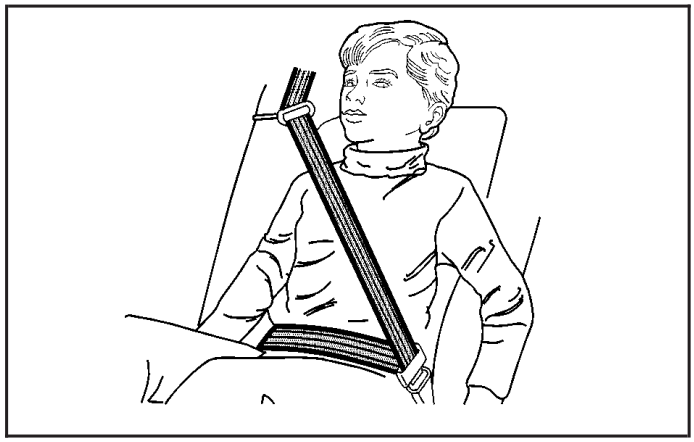

4. Buckle, position and release the safety belt as described in *Rear Seat Passengers on page 1-44*. Make sure that the shoulder belt crosses the shoulder.

To remove and store the comfort guides, squeeze the belt edges together so that you can take them out of the guides. Slide the guide into the storage pocket.

Safety Belt Pretensioners

Your vehicle has safety belt pretensioners. Although you cannot see them, they are located on the retractor part of the safety belts for the driver and right front passenger. They help the safety belts reduce a person's forward movement in a moderate to severe frontal or near frontal crash.

Pretensioners work only once. If they activate in a crash, you will need to get new ones, and probably other new parts for your safety belt system. See *Replacing Restraint System Parts After a Crash on page 1-92*.

Safety Belt Extender

If the vehicle's safety belt will fasten around you, you should use it.

But if a safety belt is not long enough, your dealer will order you an extender. It is free. When you go in to order it, take the heaviest coat you will wear, so the extender will be long enough for you. To help avoid personal injury, do not let someone else use it, and use it only for the seat it is made to fit. The extender has been designed for adults. Never use it for securing child seats. To wear it, just attach it to the regular safety belt. For more information, see the instruction sheet that comes with the extender.

Downloaded from www.Manualslib.com manuals search engine

Child Restraints

Older Children

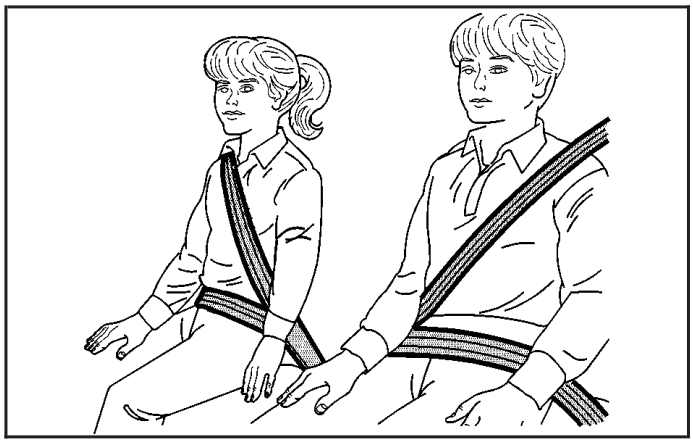

Older children who have outgrown booster seats should wear the vehicle's safety belts.

Q: What is the proper way to wear safety belts?

A: If possible, an older child should wear a lap-shoulder belt and get the additional restraint a shoulder belt can provide. The shoulder belt should not cross the face or neck. The lap belt should fit snugly below the hips, just touching the top of the thighs. It should never be worn over the abdomen, which could cause severe or even fatal internal injuries in a crash.

Accident statistics show that children are safer if they are restrained in the rear seat.

In a crash, children who are not buckled up can strike other people who are buckled up, or can be thrown out of the vehicle. Older children need to use safety belts properly.

Downloaded from www.Manualslib.com manuals search engine

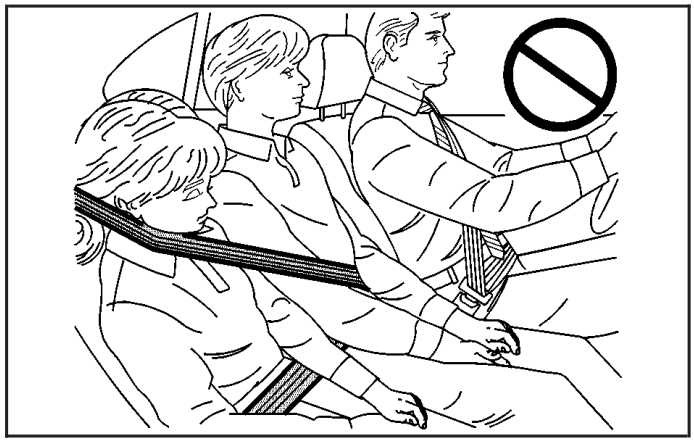

⚠ CAUTION:

Never do this.

Here two children are wearing the same belt. The belt can not properly spread the impact forces. In a crash, the two children can be crushed together and seriously injured. A belt must be used by only one person at a time.

Q: What if a child is wearing a lap-shoulder belt, but the child is so small that the shoulder belt is very close to the child's face or neck?

A: Move the child toward the center of the vehicle, but be sure that the shoulder belt still is on the child's shoulder, so that in a crash the child's upper body would have the restraint that belts provide. If the child is sitting in a second row position, see *Rear Safety Belt Comfort Guides for Children and Small Adults on page 1-47*.

Downloaded from www.Manualslib.com manuals search engine

⚠ CAUTION:

Never do this.

Here a child is sitting in a seat that has a lap-shoulder belt, but the shoulder part is behind the child. If the child wears the belt in this way, in a crash the child might slide under the belt. The belt's force would then be applied right on the child's abdomen. That could cause serious or fatal injuries.

Wherever the child sits, the lap portion of the belt should be worn low and snug on the hips, just touching the child's thighs. This applies belt force to the child's pelvic bones in a crash.

Infants and Young Children

Everyone in a vehicle needs protection! This includes infants and all other children. Neither the distance traveled nor the age and size of the traveler changes the need, for everyone, to use safety restraints. In fact, the law in every state in the United States and in every Canadian province says children up to some age must be restrained while in a vehicle.

Every time infants and young children ride in vehicles, they should have the protection provided by appropriate restraints. Young children should not use the vehicle's adult safety belts alone, unless there is no other choice. Instead, they need to use a child restraint.

Downloaded from www.Manualslib.com manuals search engine

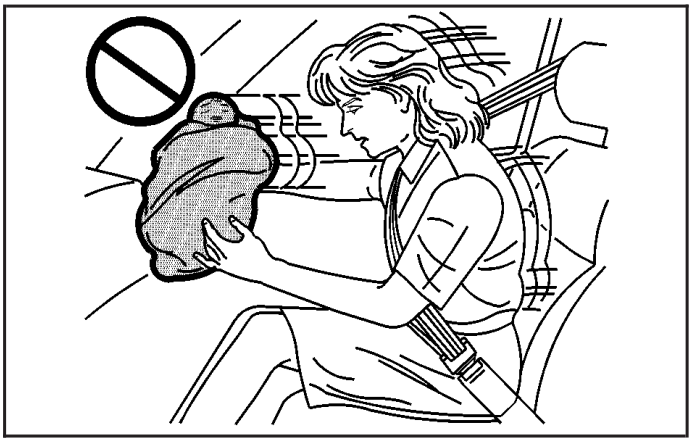

⚠ CAUTION:

People should never hold a baby in their arms while riding in a vehicle. A baby does not weigh much — until a crash. During a crash a baby will become so heavy it is not possible to hold it. For example, in a crash at only 25 mph (40 km/h), a 12-lb (5.5 kg) baby will suddenly become a 240-lb (110 kg) force on a person's arms. A baby should be secured in an appropriate restraint.

Downloaded from www.Manualslib.com manuals search engine

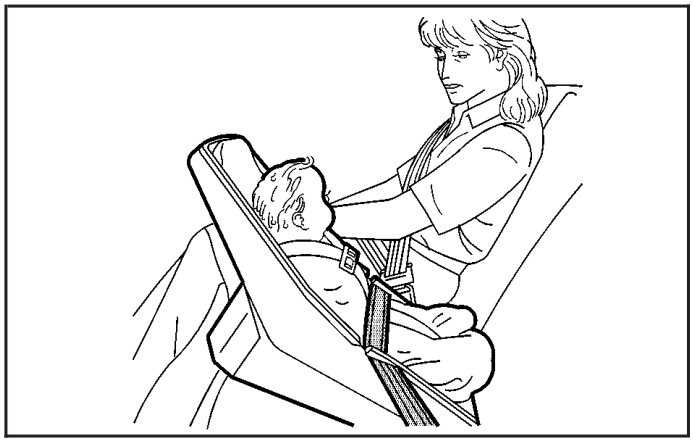

⚠ CAUTION:

Children who are up against, or very close to, any airbag when it inflates can be seriously injured or killed. Airbags plus lap-shoulder belts offer protection for adults and older children, but not for young children and infants. Neither the vehicle's safety belt system nor its airbag system is designed for them. Young children and infants need the protection that a child restraint system can provide.

Q: What are the different types of add-on child restraints?

A: Add-on child restraints, which are purchased by the vehicle's owner, are available in four basic types. Selection of a particular restraint should take into consideration not only the child's weight, height and age but also whether or not the restraint will be compatible with the motor vehicle in which it will be used.

Downloaded from www.Manualslib.com manuals search engine

For most basic types of child restraints, there are many different models available. When purchasing a child restraint, be sure it is designed to be used in a motor vehicle. If it is, the restraint will have a label saying that it meets federal motor vehicle safety standards.

The restraint manufacturer's instructions that come with the restraint state the weight and height limitations for a particular child restraint. In addition, there are many kinds of restraints available for children with special needs.

⚠ CAUTION:

Newborn infants need complete support, including support for the head and neck. This is necessary because a newborn infant's neck is weak and its head weighs so much compared with the rest of its body. In a crash, an infant in a rear-facing seat settles into the restraint, so the crash forces can be distributed across the strongest part of an infant's body, the back and shoulders. Infants always should be secured in appropriate infant restraints.

⚠ CAUTION:

The body structure of a young child is quite unlike that of an adult or older child, for whom the safety belts are designed. A young child's hip bones are still so small that the vehicle's regular safety belt may not remain low on the hip bones, as it should. Instead, it may settle up around the child's abdomen. In a crash, the belt would apply force on a body area that is unprotected by any bony structure. This alone could cause serious or fatal injuries. Young children always should be secured in appropriate child restraints.

Downloaded from www.Manualslib.com manuals search engine

Child Restraint Systems

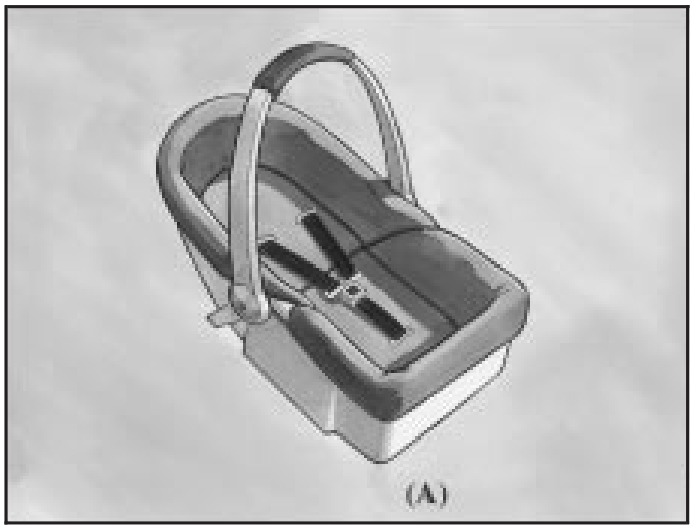

An infant car bed (A), a special bed made for use in a motor vehicle, is an infant restraint system designed to restrain or position a child on a continuous flat surface. Make sure that the infant's head rests toward the center of the vehicle.

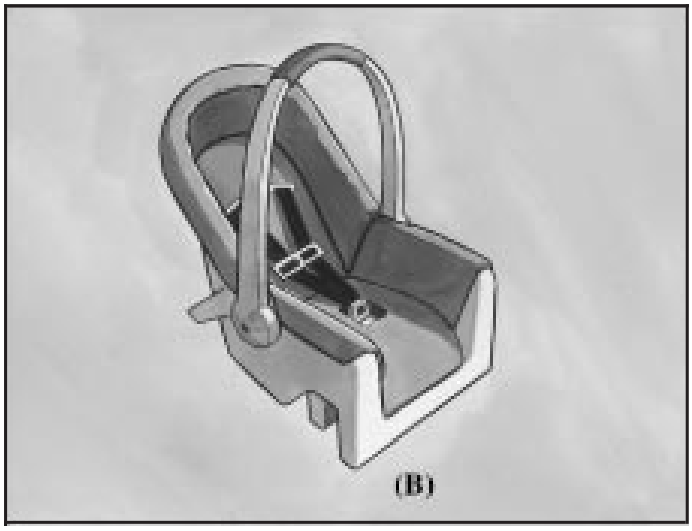

A rear-facing infant seat (B) provides restraint with the seating surface against the back of the infant. The harness system holds the infant in place and, in a crash, acts to keep the infant positioned in the restraint.

Downloaded from www.Manualslib.com manuals search engine

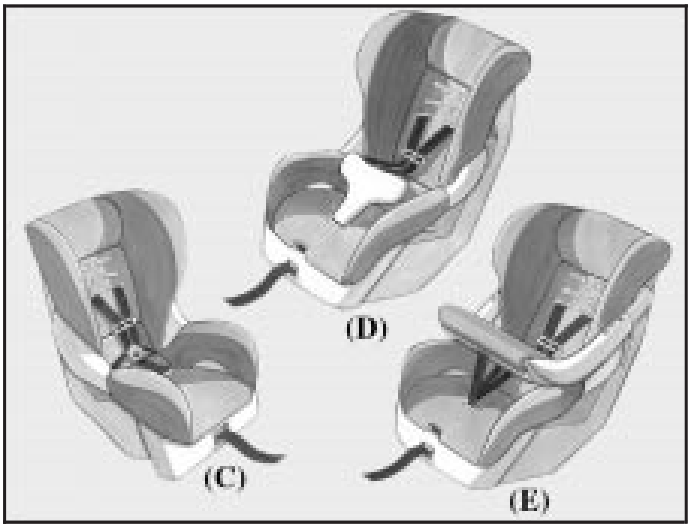

A forward-facing child seat (C-E) provides restraint for the child's body with the harness and also sometimes with surfaces such as T-shaped or shelf-like shields.

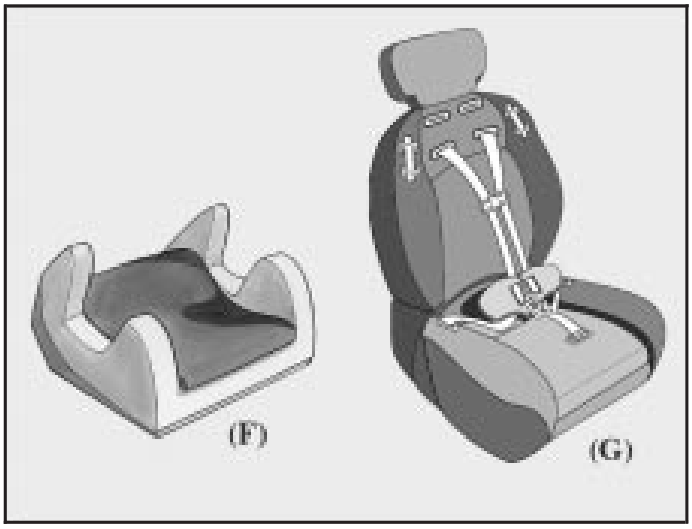

A booster seat (F-G) is a child restraint designed to improve the fit of the vehicle's safety belt system. Some booster seats have a shoulder belt positioner, and some high-back booster seats have a five-point harness. A booster seat can also help a child to see out the window.

Downloaded from www.Manualslib.com manuals search engine

Q: How do child restraints work?

A: A child restraint system is any device designed for use in a motor vehicle to restrain, seat, or position children. A built-in child restraint system is a permanent part of the motor vehicle. An add-on child restraint system is a portable one, which is purchased by the vehicle's owner.

For many years, add-on child restraints have used the adult belt system in the vehicle. To help reduce the chance of injury, the child also has to be secured within the restraint. The vehicle's belt system secures the add-on child restraint in the vehicle, and the add-on child restraint's harness system holds the child in place within the restraint.

One system, the three-point harness, has straps that come down over each of the infant's shoulders and buckle together at the crotch. The five-point harness system has two shoulder straps, two hip straps and a crotch strap. A shield may take the place of hip straps. A T-shaped shield has shoulder straps that are attached to a flat pad which rests low against the child's body. A shelf- or armrest-type shield has straps that are attached to a wide, shelf-like shield that swings up or to the side.

When choosing a child restraint, be sure the child restraint is designed to be used in a vehicle. If it is, it will have a label saying that it meets federal motor vehicle safety standards.

Then follow the instructions for the restraint. You may find these instructions on the restraint itself or in a booklet, or both. These restraints use the belt system in your vehicle, but the child also has to be secured within the restraint to help reduce the chance of personal injury. When securing an add-on child restraint, refer to the instructions that come with the restraint which may be on the restraint itself or in a booklet, or both, and to this manual. The child restraint instructions are important, so if they are not available, obtain a replacement copy from the manufacturer.

Q: When securing an aftermarket child seat in a bucket seat, I am unable to get the seat fastened in snugly enough. What should I do?

A: With some child seats, it may be difficult to tighten the vehicle belts so that there is less side-to-side or front-to-back movement of the child seat. A replacement buckle, which makes it easier to secure your child seat, is available from your dealer at no charge to you.

Downloaded from www.Manualslib.com manuals search engine

Where to Put the Restraint

Accident statistics show that children are safer if they are restrained in the rear rather than the front seat. We, therefore, recommend that child restraints be secured in a rear seat, including an infant riding in a rear-facing infant seat, a child riding in a forward-facing child seat and an older child riding in a booster seat. *Never* put a rear-facing child restraint in the front passenger seat. Here is why:

⚠ CAUTION:

A child in a rear-facing child restraint can be seriously injured or killed if the right front passenger's airbag inflates. This is because the back of the rear-facing child restraint would be very close to the inflating airbag. Always secure a rear-facing child restraint in a rear seat.

If you need to secure a forward-facing child restraint in the right front seat, always move the front passenger seat as far back as it will go. It is better to secure the child restraint in a rear seat.

Wherever you install it, be sure to secure the child restraint properly.

Keep in mind that an unsecured child restraint can move around in a collision or sudden stop and injure people in the vehicle. Be sure to properly secure any child restraint in your vehicle — even when no child is in it.

Top Strap

Some child restraints have a top strap, or "top tether." It can help restrain the child restraint during a collision. For it to work, a top strap must be properly anchored to the vehicle. Some top strap-equipped child restraints are designed for use with or without the top strap being anchored. Others require the top strap always to be anchored. Be sure to read and follow the instructions for your child restraint. If yours requires that the top strap be anchored, do not use the restraint unless it is anchored properly.

Downloaded from www.Manualslib.com manuals search engine

If the child restraint does not have a top strap, one can be obtained, in kit form, for many child restraints. Ask the child restraint manufacturer whether or not a kit is available.

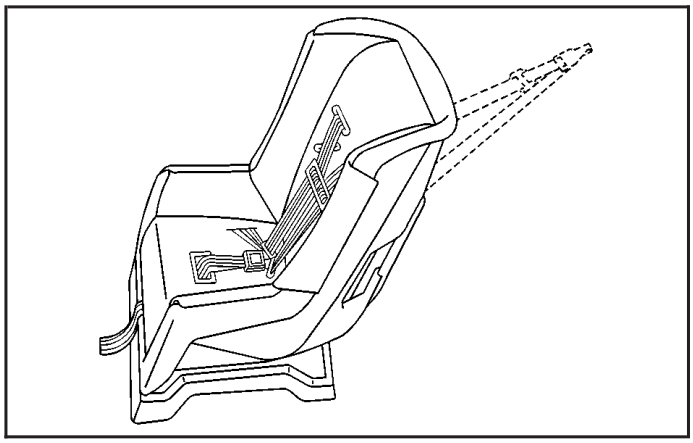

In Canada, the law requires that forward-facing child restraints have a top strap, and that the strap be anchored. In the United States, some child restraints also have a top strap. If your child restraint has a top strap, it should be anchored.

Anchor the top strap to one of the following anchor points. Be sure to use an anchor point located on the same side of the vehicle as the seating position where the child restraint will be placed.

If you have an adjustable head restraint, route the top strap under it.

Once you have the top strap anchored, you will be ready to secure the child restraint itself. Tighten the top strap when and as the child restraint manufacturer's instructions say.

Downloaded from www.Manualslib.com manuals search engine

Top Strap Anchor Location

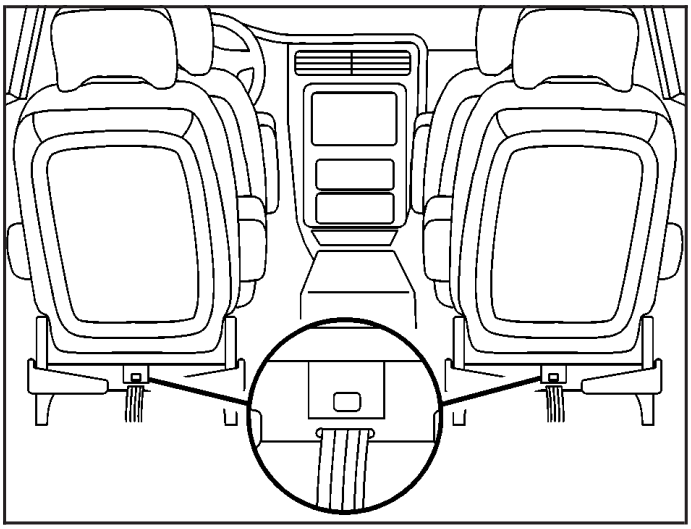

Second Row

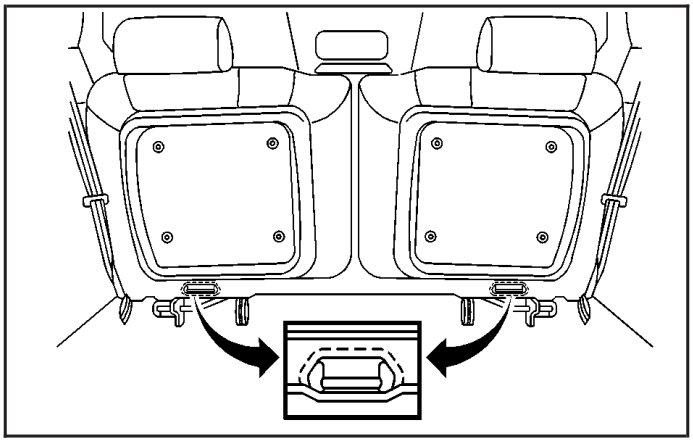

Third Row

An anchor bar for a top strap is located at the rear of the seat cushion for each second and third row outboard seating position, and for the center position of the second row.

Downloaded from www.Manualslib.com manuals search engine

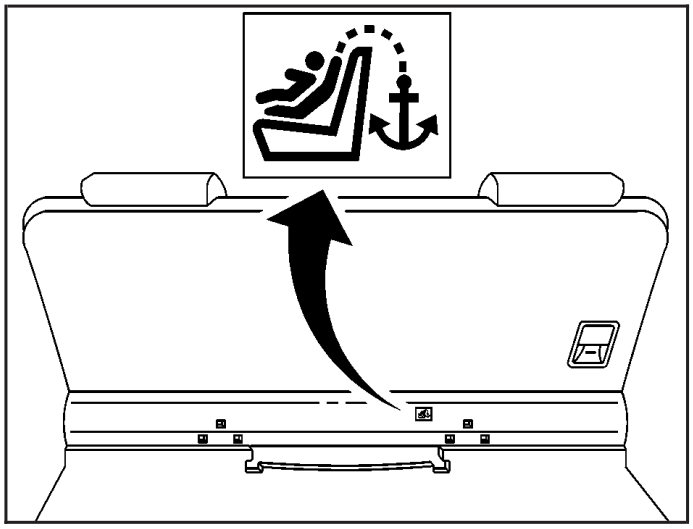

Third Row (Stowable Seat)

The anchor bar for the stowable bench seat is located on the passenger's side of the crossbar. Use the center seating position to use the anchor bar properly. If the convenience center is in the vehicle, you must lift the tray sill to use the anchor.

Do not secure a child restraint with a top strap in the right front passenger's position or at the third row driver's side position (vehicles with a full bench seat) if a national or local law requires that the top strap be anchored, or if the instructions that come with the child restraint say that the top strap must be anchored. There is no place to anchor the top strap in this position.

Lower Anchorages and Top Tethers for Children (LATCH System)

Your vehicle has the LATCH system. You will find anchors in the second row outboard bucket seats, the 40 side of the 60/40 split bench seat, and both second row captain's chairs.

This system, designed to make installation of child restraints easier, does not use the vehicle's safety belts. Instead, it uses vehicle anchors and child restraint attachments to secure the restraints. Some restraints also use another vehicle anchor to secure a top tether strap.

Downloaded from www.Manualslib.com manuals search engine

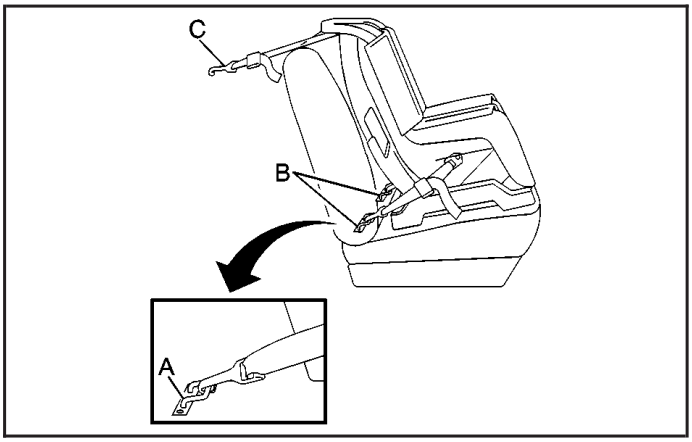

A. Lower Anchorage
B. Lower Anchorage
C. Top Tether

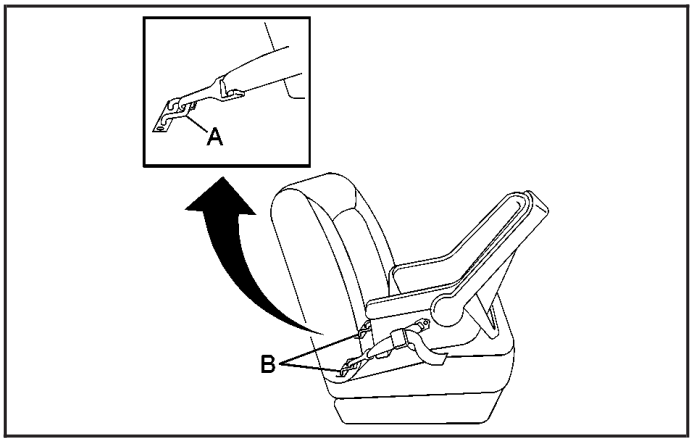

A. Lower Anchorage
B. Lower Anchorage

In order to use the LATCH system in your vehicle, you need a child restraint designed for that system.

Downloaded from www.Manualslib.com manuals search engine

To assist you in locating the lower anchors for this child restraint system, each seating position with the LATCH system has a label on the seatback.

The labels are located at each lower anchor position, near the base of the second row outboard bucket seats, the 40 side of the 60/40 split bench seat, and both second row captain's chairs.

⚠ CAUTION:

If a LATCH-type child restraint is not attached to its anchorage points, the restraint will not be able to protect the child correctly. In a crash, the child could be seriously injured or killed. Make sure that a LATCH-type child restraint is properly installed using the anchorage points, or use the vehicle's safety belts to secure the restraint, following the instructions that came with that restraint, and also the instructions in this manual.

Securing a Child Restraint Designed for the LATCH System

1. Find the LATCH anchorages for the seating position you want to use, where the bottom of the seatback meets the back of the seat cushion. See *Lower Anchorages and Top Tethers for Children (LATCH System) on page 1-62*.
2. Put the child restraint on the seat.
3. Attach and tighten the LATCH attachments on the child restraint to the LATCH anchorages in the vehicle. The child restraint instructions will show you how.
4. If the child restraint is forward-facing, attach and tighten the top tether to the top tether anchorage. The child restraint instructions will show you how. Also see *Top Strap on page 1-59*.
5. Push and pull the child restraint in different directions to be sure it is secure.

To remove the child restraint, simply unhook the top tether from the top tether anchorage and then disconnect the LATCH attachments from the LATCH anchorages.

Downloaded from www.Manualslib.com manuals search engine

Securing a Child Restraint in a Rear Seat Position

If your child restraint is equipped with the LATCH system, see *Lower Anchorages and Top Tethers for Children (LATCH System) on page 1-62*. See *Top Strap on page 1-59* if the child restraint has a top strap or top tether.

For vehicles with a full bench seat in the third row, there is no top strap anchor in the driver's side position. Do not secure a child seat in this position if a national or local law requires that the top strap be anchored, or if the instructions that come with the child restraint say that the top strap must be anchored.

If your child restraint does not have the LATCH system, you will be using the lap-shoulder belt to secure the child restraint. Be sure to follow the instructions that came with the child restraint. Secure the child in the child restraint when and as the instructions say.

1. Put the child restraint on the seat.
2. Pick up the latch plate, and run the lap and shoulder portions of the vehicle's safety belt through or around the restraint. The child restraint instructions will show you how.

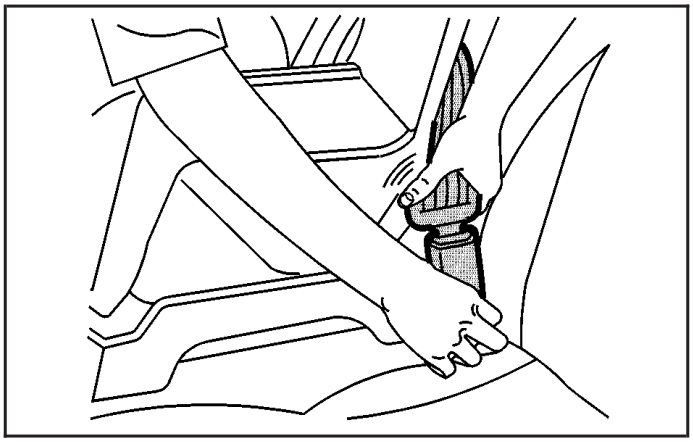

3. Buckle the belt. Make sure the release button is positioned so you would be able to unbuckle the safety belt quickly if you ever had to.

Downloaded from www.Manualslib.com manuals search engine

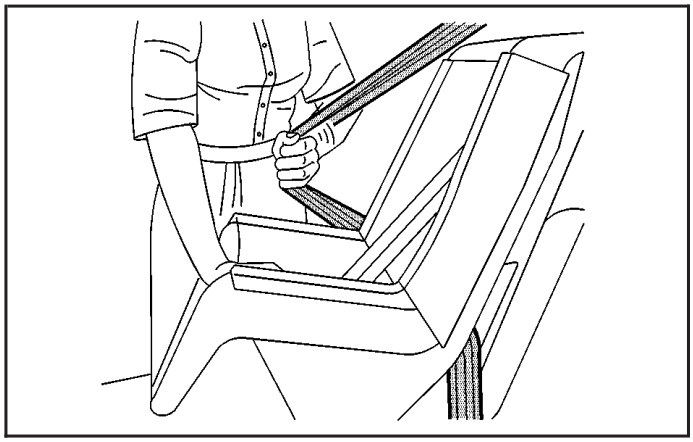

4. Pull the rest of the shoulder belt all the way out of the retractor to set the lock.

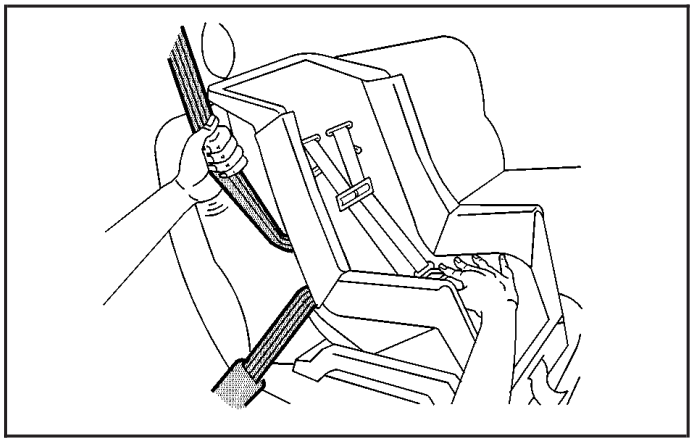

5. To tighten the belt, push down on the child restraint, pull the shoulder portion of the belt to tighten the lap portion of the belt and feed the shoulder belt back into the retractor. If you are using a forward-facing child restraint, you may find it helpful to use your knee to push down on the child restraint as you tighten the belt.
6. Push and pull the child restraint in different directions to be sure it is secure.

To remove the child restraint, just unbuckle the vehicle's safety belt and let it go back all the way. The safety belt will move freely again and be ready to work for an adult or larger child passenger.

Downloaded from www.Manualslib.com manuals search engine

Securing a Child Restraint in the Right Front Seat Position

Your vehicle has a front passenger airbag. *Never* put a rear-facing child restraint in this seat. Here is why:

⚠ CAUTION:

A child in a rear-facing child restraint can be seriously injured or killed if the front passenger's airbag inflates. This is because the back of the rear-facing child restraint would be very close to the inflating airbag. Always secure a rear-facing child restraint in a rear seat.

If your child restraint is equipped with the LATCH system, see *Lower Anchorages and Top Tethers for Children (LATCH System) on page 1-62*.

There is no top strap anchor in the right front passenger's position. Do not secure a child seat in this position if a national or local law requires that the top strap be anchored, or if the instructions that come with the child restraint say that the top strap must be anchored. See *Top Strap on page 1-59* if the child restraint has one.

A rear seat is a safer place to secure a forward-facing child restraint. If you need to secure a forward-facing child restraint in the right front seat, you will be using the lap-shoulder belt to secure the child restraint in this position. Be sure to follow the instructions that came with the child restraint. Secure the child in the child restraint when and as the instructions say.

1. Because your vehicle has a right front passenger's airbag, always move the seat as far back as it will go before securing a forward-facing child restraint. See *Manual Seats on page 1-3* or *Six-Way Power Seats on page 1-4*.
2. Put the child restraint on the seat.
3. Pick up the latch plate, and run the lap and shoulder portions of the vehicle's safety belt through or around the restraint. The child restraint instructions will show you how.

Downloaded from www.Manualslib.com manuals search engine

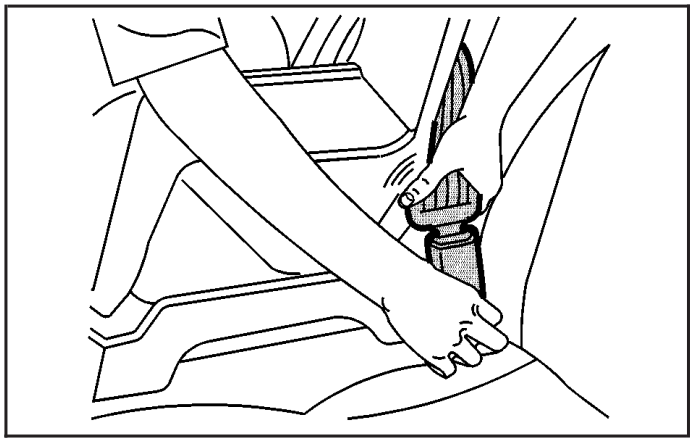

4. Buckle the belt. Make sure the release button is positioned so you would be able to unbuckle the safety belt quickly if you ever had to.

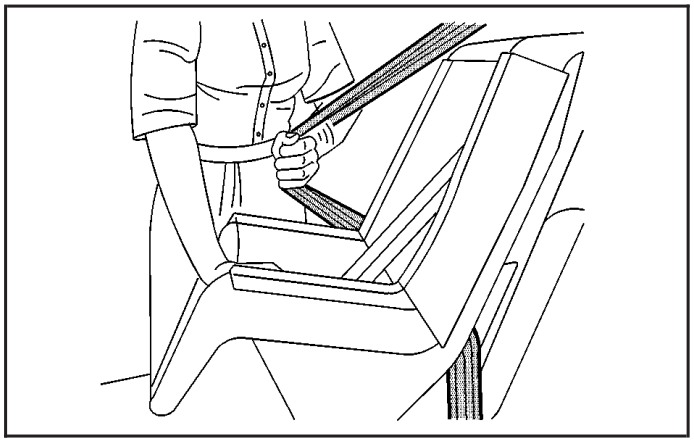

5. Pull the rest of the lap belt all the way out of the retractor to set the lock.

Downloaded from www.Manualslib.com manuals search engine

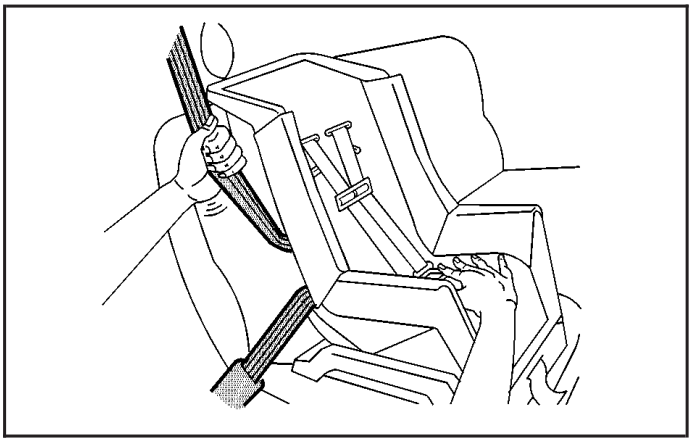

6. To tighten the belt, push down on the child restraint, pull the shoulder portion of the belt to tighten the lap portion of the belt and feed the shoulder belt back into the retractor. You may find it helpful to use your knee to push down on the child restraint as you tighten the belt.
7. Push and pull the child restraint in different directions to be sure it is secure.

To remove the child restraint, just unbuckle the vehicle's safety belt and let it go back all the way. The safety belt will move freely again and be ready to work for an adult or larger child passenger.

Built-In Child Restraint

WARNING! DEATH or SERIOUS INJURY can occur:

- Follow all instructions on the child restraint and in the vehicle's owner's manual.

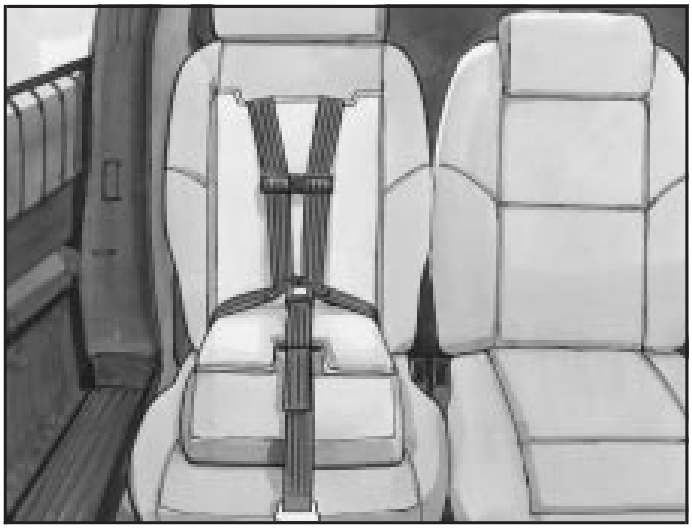

Bucket Seat

Downloaded from www.Manualslib.com manuals search engine

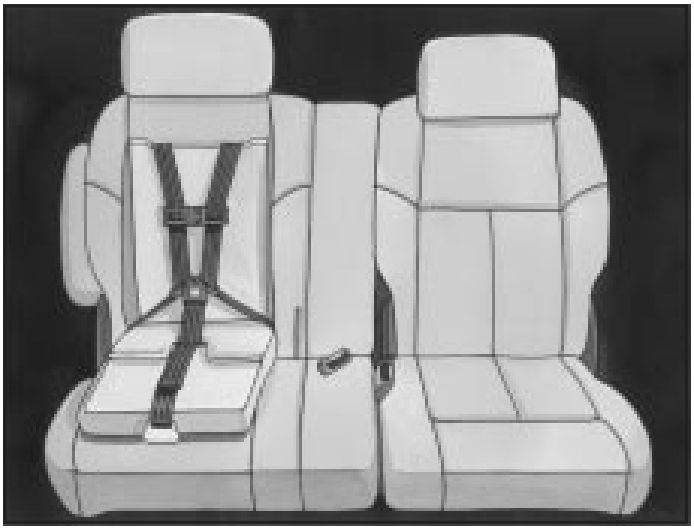

60/40 Bench Seat

If your vehicle has this option in a bucket seat, each bucket seat that has the built-in child restraint fits in only one location in your vehicle. To find out where a bucket seat that has a built-in child restraint must be located in your vehicle see *Rear Seat Operation on page 1-7*. If your vehicle has this option in a 60/40 bench seat, this bench seat will only fit in the second row of your vehicle. In both types of seats, the built-in child restraint works the same way.

This child restraint system conforms to all applicable Federal Motor Vehicle Safety Standards.

Use only with children who weigh between 22 and 40 pounds (10 and 18 kg) and whose height is between 33.5 and 40 inches (850 and 1 016 mm). Use only with children whose shoulders are below the shoulder belt slots for the harness system, and who are capable of sitting upright alone.

The child should also be at least one year old. It is important to use a rear-facing infant restraint until the child is at least one year old. A rear-facing restraint gives the infant's head, neck and body the support they would need in a crash. See *Older Children on page 1-50* or *Infants and Young Children on page 1-52*.

A child whose weight is over 40 pounds, whose height is over 40 inches or whose shoulders are above the shoulder belt slots for the harness system, should be restrained in an add-on booster seat appropriate for the child's size. See *Child Restraint Systems on page 1-56*. Once the booster seat is outgrown, the child should sit on the vehicle's regular seat and use the vehicle's safety belts.

Downloaded from www.Manualslib.com manuals search engine

⚠ CAUTION:

Using the vehicle's built-in child restraint as a booster seat for a larger child could cause injury to the child in a sudden stop or crash. A child whose weight is over 40 pounds, whose height is over 40 inches or whose shoulders are above the shoulder belt slots for the harness system should use a restraint system that is appropriate for their size, either an add-on booster seat or the vehicle's safety belt. See "Child Restraints" or "Older Children" in the Index.

Securing a Child in the Built-In Child Restraint

1. Raise the head restraint until the lower edge of the head restraint is even with the top of the seatback.

Downloaded from www.Manualslib.com manuals search engine

2. Rotate the head restraint rearward until it touches the top of the seatback. Make sure there is no gap between the lower edge of the head restraint and the top of the seatback.

3. Lower the child restraint cushion.

Downloaded from www.Manualslib.com manuals search engine

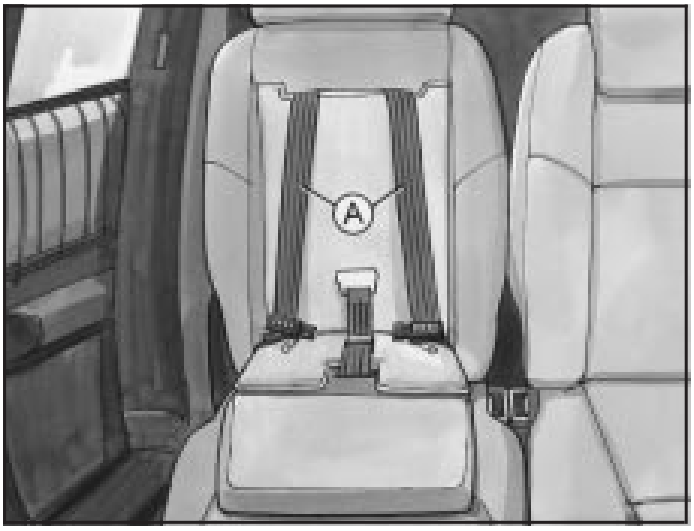

You will be using the child restraint's harness (A) to secure your child. Do not use the vehicle's safety belts.

⚠ CAUTION:

Using the vehicle's regular safety belts on a child seated on the built-in child restraint cushion can cause serious injury to the child in a sudden stop or crash. Secure the child using the built-in child restraint's harness.

WARNING: FAILURE TO FOLLOW THE MANUFACTURER'S INSTRUCTIONS ON THE USE OF THIS CHILD RESTRAINT SYSTEM CAN RESULT IN YOUR CHILD STRIKING THE VEHICLE'S INTERIOR DURING A SUDDEN STOP OR CRASH.

SNUGLY ADJUST THE BELTS PROVIDED WITH THIS CHILD RESTRAINT AROUND YOUR CHILD.

Downloaded from www.Manualslib.com manuals search engine

4. Before placing the child in the child restraint, add slack to the shoulder harness. Pull the black shoulder harness release strap firmly. At the same time pull both shoulder harness straps through the slots in the seatback as shown.
5. Place the child on the child restraint cushion.

6. Select only one side of the harness. Place the harness over the child's shoulder.

Downloaded from www.Manualslib.com manuals search engine

7. Push the latch plate (B) into the buckle until it clicks.

   Be sure the buckle is free of any foreign objects that may prevent you from securing the latch plates. If you can not secure a latch plate, see your dealer for service before using the child restraint.

8. Place the other side of the harness over the child's shoulder.

9. Push the latch plate into the buckle until it clicks.

10. Pull up on the latch plates to make sure they are secure.

Downloaded from www.Manualslib.com manuals search engine

11. Now fasten the left and right halves of the shoulder harness clip together. The clip can be easily pulled apart and is designed to pull apart during a collision.

⚠ CAUTION:

A built-in child restraint harness that is not properly adjusted can cause injury to the child in a sudden stop or collision. A harness that is loose, twisted, worn improperly or improperly fastened will not be able to restrain the child's upper body. Make sure the harness is adjusted correctly. Fastening the clip is not a substitute for adjusting the harness so that it is snug.

Downloaded from www.Manualslib.com manuals search engine

12. Pull the shoulder harness adjustment strap (C) firmly until the harness is snugly adjusted around the child. You should not be able to put more than two fingers between the harness and the child's chest. Make sure the harness and buckle strap are not twisted.

13. Adjust the position of the harness on the child's shoulder by moving the clip along the harness until it is level with the child's armpits. On each side of the harness, the shoulder part should be centered on the child's shoulder. The harness should be away from the child's face and neck, but not falling from the child's shoulders.

    If you expect that the child will sleep while riding, you can recline the seatback. See *Split Bench Seats on page 1-8* or *Bucket Seats on page 1-16*.

Downloaded from www.Manualslib.com manuals search engine

Removing the Child from the Built-In Child Restraint

1. Unfasten the shoulder harness clip.

2. Unlatch the harness by pushing the button on the buckle.
3. Move one side of the harness off the child's shoulder.
4. Move the other side of the harness off the child's shoulder.
5. Remove the child from the child restraint cushion.

Downloaded from www.Manualslib.com manuals search engine

Storing the Built-In Child Restraint

Always properly store the built-in child restraint before using the vehicle's lap-shoulder belt.

1. Move both latch plates and both sides of the shoulder harness clip to the bottom of the harness straps.

2. Fold the child restraint cushion and leg rest up into the seatback.
3. Press the child restraint cushion firmly into the seatback.

Downloaded from www.Manualslib.com manuals search engine

4. Then press the leg rest firmly into the seatback, and secure it by pressing the upper corners against the fastener strips on the seatback.

5. Rotate the head restraint forward and push it all the way down.

Just like the other restraint systems in your vehicle, your built-in child restraint needs to be periodically checked and may need to have parts replaced after a crash. See *Checking Your Restraint Systems on page 1-91* and *Replacing Restraint System Parts After a Crash on page 1-92*.

Downloaded from www.Manualslib.com manuals search engine

Airbag System

Your vehicle has airbags — a frontal airbag for the driver and another frontal airbag for the right front passenger. Your vehicle may also have side impact airbags. Side impact airbags are available for the driver and right front passenger.

If your vehicle has a side impact airbag for the driver and/or the right front passenger, the words AIR BAG will appear on the airbag covering on the side of the seatback closest to the door.

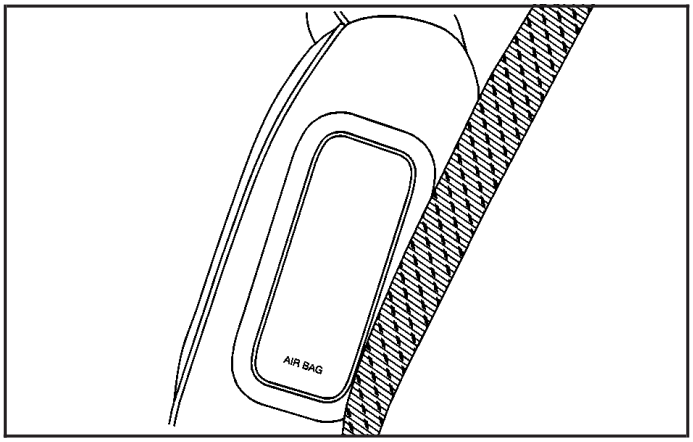

Frontal airbags are designed to help reduce the risk of injury from the force of an inflating frontal airbag. But these airbags must inflate very quickly to do their job and comply with federal regulations.

Downloaded from www.Manualslib.com manuals search engine

Here are the most important things to know about the airbag system:

⚠ CAUTION:

You can be severely injured or killed in a crash if you are not wearing your safety belt — even if you have airbags. Wearing your safety belt during a crash helps reduce your chance of hitting things inside the vehicle or being ejected from it. Airbags are designed to work with safety belts but do not replace them.

Frontal airbags for the driver and right front passenger are designed to deploy only in moderate to severe frontal and near frontal crashes. They are not designed to inflate in rollover, rear or low-speed frontal crashes, or in many side crashes. And, for some unrestrained occupants, frontal airbags may provide less protection in frontal crashes than more forceful airbags have provided in the past.

CAUTION: (Continued)

CAUTION: (Continued)

The side impact airbags for the driver and right front passenger are designed to inflate only in moderate to severe crashes where something hits the side of your vehicle. They are not designed to inflate in frontal, in rollover or in rear crashes.

Everyone in your vehicle should wear a safety belt properly — whether or not there is an airbag for that person.

Downloaded from www.Manualslib.com manuals search engine

⚠ CAUTION:

Both frontal and side impact airbags inflate with great force, faster than the blink of an eye. If you are too close to an inflating airbag, as you would be if you were leaning forward, it could seriously injure you. Safety belts help keep you in position for airbag inflation before and during a crash. Always wear your safety belt, even with frontal airbags. The driver should sit as far back as possible while still maintaining control of the vehicle. Front occupants should not lean on or sleep against the door.

⚠ CAUTION:

Anyone who is up against, or very close to, any airbag when it inflates can be seriously injured or killed. Airbags plus lap-shoulder belts offer the best protection for adults, but not for young children and infants. Neither the vehicle's safety belt system nor its airbag system is designed for them. Young children and infants need the protection that a child restraint system can provide. Always secure children properly in your vehicle. To read how, see *Older Children on page 1-50* or *Infants and Young Children on page 1-52*.

Downloaded from www.Manualslib.com manuals search engine

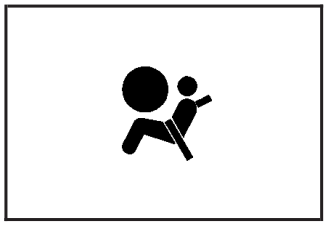

There is an airbag readiness light on the instrument panel cluster, which shows the airbag symbol.

The system checks the airbag electrical system for malfunctions. The light tells you if there is an electrical problem. See *Airbag Readiness Light on page 3-38* for more information.

Where Are the Airbags?

The driver's frontal airbag is in the middle of the steering wheel.

Downloaded from www.Manualslib.com manuals search engine

The right front passenger's frontal airbag is in the instrument panel on the passenger's side.

If your vehicle has one, the driver's side impact airbag is in the side of the driver's seatback closest to the door.

Downloaded from www.Manualslib.com manuals search engine

If your vehicle has one, the right front passenger's side impact airbag is in the side of the passenger's seatback closest to the door.

⚠ CAUTION:

If something is between an occupant and an airbag, the airbag might not inflate properly or it might force the object into that person causing severe injury or even death. The path of an inflating airbag must be kept clear. Do not put anything between an occupant and an airbag, and do not attach or put anything on the steering wheel hub or on or near any other airbag covering. Do not let seat covers block the inflation path of a side impact airbag.

Downloaded from www.Manualslib.com manuals search engine

When Should an Airbag Inflate?

The driver's and right front passenger's frontal airbags are designed to inflate in moderate to severe frontal or near-frontal crashes. But they are designed to inflate only if the impact exceeds a predetermined deployment threshold. Deployment thresholds take into account a variety of desired deployment and non-deployment events and are used to predict how severe a crash is likely to be in time for the airbags to inflate and help restrain the occupants. Whether your frontal airbags will or should deploy is not based on how fast your vehicle is traveling. It depends largely on what you hit, the direction of the impact and how quickly your vehicle slows down.

In addition, your vehicle has "dual stage" frontal airbags, which adjust the restraint according to crash severity. For moderate frontal impacts, these airbags inflate at a level less than full deployment. Your vehicle is equipped with electronic frontal sensors, which help the sensing system distinguish between a moderate frontal impact and a more severe frontal impact. For more severe frontal impacts, full deployment occurs.

If the front of your vehicle goes straight into a wall that does not move or deform, the threshold level for the reduced deployment is about 12 to 18 mph (19 to 29 km/h), and the threshold level for a full deployment is about 18 to 24 mph (29 to 38.5 km/h). (The threshold level can vary, however, with specific vehicle design, so that it can be somewhat above or below this range.)

Airbags may inflate at different crash speeds. For example:

- If the vehicle hits a stationary object, the airbag could inflate at a different crash speed than if the object were moving.
- If the object deforms, the airbag could inflate at a different crash speed than if the object does not deform.
- If the vehicle hits a narrow object (like a pole) the airbag could inflate at a different crash speed than if the vehicle hits a wide object (like a wall).
- If the vehicle goes into an object at an angle the airbag could inflate at a different crash speed than if the vehicle goes straight into the object.

Downloaded from www.Manualslib.com manuals search engine

The frontal airbags (driver and right front passenger) are not intended to inflate during vehicle rollovers, rear impacts, or in many side impacts because inflation would not likely help the occupants.

Your vehicle may or may not have a side impact airbag. See *Airbag System on page 1-81*. Side impact airbags are designed to inflate in moderate to severe side crashes. A side impact airbag will inflate if the crash severity is above the system's designed "threshold level." The threshold level can vary with specific vehicle design. Side impact airbags are not designed to inflate in frontal or near-frontal impacts, rollovers or rear impacts, because inflation would not likely help the occupant. A side impact airbag will only deploy on the side of the vehicle that is struck.

In any particular crash, no one can say whether an airbag should have inflated simply because of the damage to a vehicle or because of what the repair costs were. For frontal airbags, inflation is determined by the angle of the impact and how quickly the vehicle slows down in frontal and near-frontal impacts. For side impact airbags, inflation is determined by the location and severity of the impact.

What Makes an Airbag Inflate?

In an impact of sufficient severity, the airbag sensing system detects that the vehicle is in a crash. For both frontal and side impact airbags, the sensing system triggers a release of gas from the inflator, which inflates the airbag. The inflator, the airbag and related hardware are all part of the airbag modules. Frontal airbag modules are located inside the steering wheel and instrument panel. For vehicles with side impact airbags, the airbag modules are located in the seatback closest to the driver's and/or right front passenger's door.

Downloaded from www.Manualslib.com manuals search engine

How Does an Airbag Restrain?

In moderate to severe frontal or near frontal collisions, even belted occupants can contact the steering wheel or the instrument panel. In moderate to severe side collisions, even belted occupants can contact the inside of the vehicle. The airbag supplements the protection provided by safety belts. Airbags distribute the force of the impact more evenly over the occupant's upper body, stopping the occupant more gradually. But the frontal airbags would not help you in many types of collisions, including rollovers, rear impacts, and many side impacts, primarily because an occupant's motion is not toward the airbag. Side impact airbags would not help you in many types of collisions, including frontal or near frontal collisions, rollovers, and rear impacts, primarily because an occupant's motion is not toward those airbags. Airbags should never be regarded as anything more than a supplement to safety belts, and then only in moderate to severe frontal or near-frontal collisions for the driver's and right front passenger's frontal airbags, and only in moderate to severe side collisions for vehicles with a driver's and right front passenger's side impact airbag.

What Will You See After an Airbag Inflates?

After the airbag inflates, it quickly deflates, so quickly that some people may not even realize the airbag inflated. Some components of the airbag module will be hot for a short time. These components include the steering wheel hub for the driver's frontal airbag and the instrument panel for the right front passenger's frontal airbag. For vehicles with side impact airbags, the side of the seatback closest to the driver's and/or right front passenger's door will be hot. The parts of the bag that come into contact with you may be warm, but not too hot to touch. There will be some smoke and dust coming from the vents in the deflated airbags.

Downloaded from www.Manualslib.com manuals search engine

Airbag inflation does not prevent the driver from seeing or being able to steer the vehicle, nor does it stop people from leaving the vehicle.

⚠ CAUTION:

When an airbag inflates, there is dust in the air. This dust could cause breathing problems for people with a history of asthma or other breathing trouble. To avoid this, everyone in the vehicle should get out as soon as it is safe to do so. If you have breathing problems but can not get out of the vehicle after an airbag inflates, then get fresh air by opening a window or a door. If you experience breathing problems following an airbag deployment, you should seek medical attention.

In many crashes severe enough to inflate an airbag, windshields are broken by vehicle deformation.

Additional windshield breakage may also occur from the right front passenger airbag.

- Airbags are designed to inflate only once. After an airbag inflates, you will need some new parts for your airbag system. If you do not get them, the airbag system will not be there to help protect you in another crash. A new system will include airbag modules and possibly other parts. The service manual for your vehicle covers the need to replace other parts.
- Your vehicle is equipped with a crash sensing and diagnostic module which records information after a crash. See *Vehicle Data Collection and Event Data Recorders on page 7-9*.
- Let only qualified technicians work on your airbag system. Improper service can mean that an airbag system will not work properly. See your dealer for service.

Notice: **If you damage the covering for the driver's or the right front passenger's airbag, or the airbag covering on the driver's and right front passenger's seatback, the airbag may not work properly. You may have to replace the airbag module in the steering wheel, both the airbag module and the instrument panel for the right front passenger's airbag, or both the airbag module and seatback for the driver's and right front passenger's side impact airbag. Do not open or break the airbag coverings.**

Downloaded from www.Manualslib.com manuals search engine

Servicing Your Airbag-Equipped Vehicle

Airbags affect how your vehicle should be serviced. There are parts of the airbag system in several places around your vehicle. Your dealer and the service manual have information about servicing your vehicle and the airbag system. To purchase a service manual, see *Service Publications Ordering Information on page 7-11*.

⚠ CAUTION:

For up to 10 seconds after the ignition key is turned off and the battery is disconnected, an airbag can still inflate during improper service. You can be injured if you are close to an airbag when it inflates. Avoid yellow connectors. They are probably part of the airbag system. Be sure to follow proper service procedures, and make sure the person performing work for you is qualified to do so.

The airbag system does not need regular maintenance.

Restraint System Check

Checking Your Restraint Systems

Now and then, make sure the safety belt reminder light and all your belts, buckles, latch plates, retractors and anchorages are working properly. If your vehicle has a built-in child restraint, also periodically make sure the harness straps, latch plates, buckle, clip, child head restraint and anchorages are working properly. Look for any other loose or damaged safety belt system parts. If you see anything that might keep a safety belt system from doing its job, have it repaired.

Torn or frayed safety belts may not protect you in a crash. They can rip apart under impact forces. If a belt is torn or frayed, get a new one right away.

If your vehicle has the built-in child restraint, torn or frayed harness straps can rip apart under impact forces just like torn or frayed safety belts can. They may not protect a child in a crash. If a harness strap is torn or frayed, get a new harness right away.

Also look for any opened or broken airbag covers, and have them repaired or replaced. (The airbag system does not need regular maintenance.)

Downloaded from www.Manualslib.com manuals search engine

Replacing Restraint System Parts After a Crash

⚠ CAUTION:

A crash can damage the restraint systems in your vehicle. A damaged restraint system may not properly protect the person using it, resulting in serious injury or even death in a crash. To help make sure your restraint systems are working properly after a crash, have them inspected and any necessary replacements made as soon as possible.

If you have had a crash, do you need new safety belts or built-in child restraint parts or LATCH system parts?

After a very minor collision, nothing may be necessary. But if the safety belts or built-in child restraint harness straps were stretched, as they would be if worn during a more severe crash, then you need new parts.

If the LATCH system was being used during a more severe crash, then you may need new LATCH system parts.

If safety belts or built-in child restraint harness straps are cut or damaged, replace them. Collision damage also may mean you will need to have safety belt, built-in child restraint, LATCH system or seat parts repaired or replaced. New parts and repairs may be necessary even if the safety belt, built-in child restraint or LATCH system was not being used at the time of the collision.

If an airbag inflates, you will need to replace airbag system parts. See the part on the airbag system earlier in this section.

If the frontal airbags inflate, you will also need to replace the driver's and right front passenger's safety belt retractor assemblies. Be sure to do so. Then the new retractor assemblies will be there to help protect you in a collision.

After a crash you may need to replace the driver and front passenger's safety belt retractor assemblies, even if the frontal airbags have not deployed. The driver and front passenger's safety belt retractor assemblies contain the safety belt pretensioners. Have your safety belt pretensioners checked if your vehicle has been in a collision, or if your airbag readiness light stays on after you start your vehicle or while you are driving. See *Airbag Readiness Light on page 3-38*.

Downloaded from www.Manualslib.com manuals search engine

Section 2 Features and Controls

Keys 2-3
Remote Keyless Entry System 2-4
Remote Keyless Entry System Operation 2-5

Doors and Locks 2-9
Door Locks 2-9
Power Door Locks 2-10
Last Door Closed Locking 2-11
Programmable Automatic Door Locks 2-12
Lockout Protection 2-12
Dual Sliding Doors 2-13
Power Sliding Door (PSD) 2-16
Liftgate 2-21

Windows 2-23
Power Windows 2-24
Power Rear Quarter Windows 2-25
Sun Visors 2-25

Theft-Deterrent Systems 2-25
Content Theft-Deterrent 2-26
PASS-Key® III 2-28
PASS-Key® III Operation 2-28

Starting and Operating Your Vehicle 2-30
New Vehicle Break-In 2-30
Ignition Positions 2-30
Retained Accessory Power (RAP) 2-31
Starting Your Engine 2-31
Engine Coolant Heater 2-32
Automatic Transaxle Operation 2-33
Parking Brake 2-37
Shifting Into Park (P) 2-38
Shifting Out of Park (P) 2-39
Parking Over Things That Burn 2-40
Engine Exhaust 2-40
Running Your Engine While You Are Parked 2-41

Mirrors 2-42
Manual Rearview Mirror 2-42
Outside Power Mirrors 2-42
Outside Convex Mirror 2-42
Outside Heated Mirrors 2-43

OnStar® System 2-43

Downloaded from www.Manualslib.com manuals search engine

Section 2 Features and Controls

HomeLink® Transmitter 2-44
Programming the HomeLink® Transmitter 2-45
Storage Areas 2-48
Glove Box 2-48
Cupholder(s) 2-48
Compact Overhead Console 2-49
Overhead Console 2-49
Front Seat Storage Net 2-51
Luggage Carrier 2-52
Rear Storage Area 2-53
Convenience Net 2-53
Convenience Center 2-54
Vehicle Personalization 2-57
Entering Programming Mode 2-58
Delayed Illumination and Exit Lighting 2-58
Automatic Door Locks 2-59
Last Door Locking and Lockout Deterrent 2-60
Remote Driver Unlock Control 2-61
Remote Lock and Unlock Confirmation 2-62
Content Theft-Deterrent System 2-63
Arming and Disarming the Content Theft-Deterrent System 2-64
Exiting Programming Mode 2-66

Downloaded from www.Manualslib.com manuals search engine

Keys

⚠ CAUTION:

Leaving children in a vehicle with the ignition key is dangerous for many reasons. They could operate the power windows or other controls or even make the vehicle move. The children or others could be badly injured or even killed. Do not leave the keys in a vehicle with children.

Your vehicle's key can be used for the ignition as well as the driver's door lock and storage compartments. If you need a new key, contact your dealer, who can obtain the correct key code.

Downloaded from www.Manualslib.com manuals search engine

Your vehicle has the PASS-Key® III vehicle theft system. The key has a transponder in the key head that matches a decoder in the vehicle's steering column. If a replacement key or any additional key is needed, you must purchase this key from your dealer. The key will have PK3 stamped on it. Keep the bar code tag that came with the original keys. Give this tag to your dealer if you need a new key made.

Any new PASS-Key® III key must be programmed before it will start your vehicle. See *PASS-Key® III on page 2-28* for more information on programming your new key.

Notice: **If you ever lock your keys in your vehicle, you may have to damage the vehicle to get in. Be sure you have spare keys.**

If you ever do get locked out of your vehicle, see *Roadside Assistance Program on page 7-5* for more information.

If your vehicle is equipped with the OnStar® system with an active subscription and you lock your keys inside the vehicle, OnStar® may be able to send a command to unlock your vehicle. See *OnStar® System on page 2-43* for more information.

Remote Keyless Entry System

Your keyless entry system operates on a radio frequency subject to Federal Communications Commission (FCC) Rules and with Industry Canada.

This device complies with Part 15 of the FCC Rules. Operation is subject to the following two conditions:

1. This device may not cause interference, and
2. This device must accept any interference received, including interference that may cause undesired operation of the device.

This device complies with RSS-210 of Industry Canada. Operation is subject to the following two conditions:

1. This device may not cause interference, and
2. This device must accept any interference received, including interference that may cause undesired operation of the device.

Changes or modifications to this system by other than an authorized service facility could void authorization to use this equipment.

Downloaded from www.Manualslib.com manuals search engine

At times you may notice a decrease in range. This is normal for any remote keyless entry system. If the transmitter does not work or if you have to stand closer to your vehicle for the transmitter to work, try this:

- Check the distance. You may be too far from your vehicle. You may need to stand closer during rainy or snowy weather.
- Check the location. Other vehicles or objects may be blocking the signal. Take a few steps to the left or right, hold the transmitter higher, and try again.
- Check to determine if battery replacement is necessary. See “Battery Replacement” under *Remote Keyless Entry System Operation on page 2-5*.
- If you are still having trouble, see your dealer or a qualified technician for service.

Remote Keyless Entry System Operation

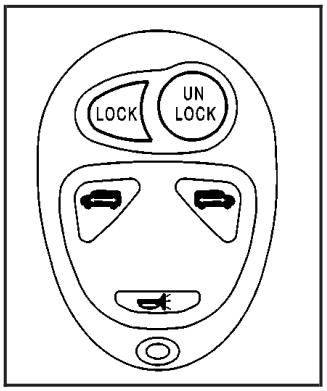

You can lock and unlock your doors and the liftgate from about 3 feet (1 m) up to 30 feet (9 m) away using the remote keyless entry transmitter supplied with your vehicle.

UNLOCK: When you press UNLOCK on the remote keyless entry transmitter, only the driver’s door will unlock. If you press UNLOCK again within five seconds, all the doors and the liftgate will unlock. If you would like all the doors to unlock the first time you press UNLOCK, see *Vehicle Personalization on page 2-57*.

Downloaded from www.Manualslib.com manuals search engine

With the content theft-deterrent system, the UNLOCK button on the remote keyless entry transmitter will disarm the system. See *Content Theft-Deterrent on page 2-26* for more details.

When you use your remote keyless entry transmitter to unlock your vehicle or to operate the power sliding door(s), the parking lamps will flash to let you know the command was received.

If you would like to change the way the parking lamps operate with remote unlock confirmation, see *Vehicle Personalization on page 2-57*.

LOCK: To lock all doors, press LOCK on the remote keyless entry transmitter. See *Power Door Locks on page 2-10* for more details on the power door lock features. With the content theft-deterrent system, the LOCK button may arm the system. See *Content Theft-Deterrent on page 2-26* for more details.

When you use the remote keyless entry transmitter to lock your vehicle, the parking lamps will flash to let you know the command has been received. If you press the LOCK button again, within five seconds, the horn will sound and the parking lamps will flash to let you know the vehicle is already locked.

If you would like to change the way the parking lamps and horn operate with remote lock confirmation, see *Vehicle Personalization on page 2-57*.

Remote Alarm

When you press the horn button on the remote keyless entry transmitter, the parking lamps will flash and the horn will sound. This will allow you to attract attention, if needed.

Press this button again to stop the alarm from sounding.

Remote Power Sliding Door Operation

If your vehicle has the power sliding door, your remote keyless entry transmitter will have a button that has a van symbol on it. Press it to open or close the sliding door. See *Power Sliding Door (PSD) on page 2-16*.

If your vehicle has the dual power sliding doors, your remote keyless entry transmitter will have two buttons that have a van symbol on them. The van symbol on the left is for the driver's side sliding door and the van symbol on the right is for the passenger's side sliding door. See *Power Sliding Door (PSD) on page 2-16*.

If the power sliding door(s) is locked, first unlock all doors, then press the van symbol to open the power sliding door(s). The parking lamps will flash when the right button with the van symbol is pressed and they will not flash when the left button with the van symbol is pressed. Press the van symbol again to close the sliding door(s). See *Power Sliding Door (PSD) on page 2-16* for more information.

Downloaded from www.Manualslib.com manuals search engine

You can operate the power sliding door(s) with the remote keyless entry transmitter only when the power sliding door override switch(es) on the overhead console is turned off. See *Power Sliding Door (PSD) on page 2-16*.

If your vehicle's fuel filler door is opened, the driver's side power sliding door will not open completely. Do not try to force the door. Once the fuel filler door is closed, the driver's side sliding door can be opened normally.

Matching Transmitter(s) to Your Vehicle

Each remote keyless entry transmitter is coded to prevent another transmitter from unlocking your vehicle. If a transmitter is lost or stolen, a replacement can be purchased through your dealer. Remember to bring any remaining transmitters with you when you go to your dealer. When the dealer matches the replacement transmitter to your vehicle, any remaining transmitters must also be matched. Once your dealer has coded the new transmitter, the lost transmitter will not unlock your vehicle. Each vehicle can have a maximum of four transmitters matched to it.

See your dealer to match transmitters to another vehicle.

Downloaded from www.Manualslib.com manuals search engine

Battery Replacement

Under normal use, the battery in your remote keyless entry transmitter should last about three years.

You can tell the battery is weak if the transmitter will not work at the normal range in any location. If you have to get close to your vehicle before the transmitter works, it is probably time to change the battery.

Notice: **When replacing the battery, use care not to touch any of the circuitry. Static from your body transferred to these surfaces may damage the transmitter.**

1. Insert a flat object, such as a coin, into the slot on the side of the transmitter and twist it to separate the halves.

2. Gently pry the battery out of the transmitter. Do not use the metal flanges to pop out the battery.
3. Replace the battery.
4. Reassemble the transmitter. Make sure the halves are snapped together tightly so water will not get in.
5. Press and hold the LOCK and UNLOCK buttons for seven seconds to synchronize the transmitter.
6. Check the transmitter operation.

Downloaded from www.Manualslib.com manuals search engine

Doors and Locks

Door Locks

⚠ CAUTION:

Unlocked doors can be dangerous.

- **Passengers — especially children — can easily open the doors and fall out of a moving vehicle. When a door is locked, the handle will not open it. You increase the chance of being thrown out of the vehicle in a crash if the doors are not locked. So, wear safety belts properly and lock the doors whenever you drive.**
- **Young children who get into unlocked vehicles may be unable to get out. A child can be overcome by extreme heat and can suffer permanent injuries or even death from heat stroke. Always lock your vehicle whenever you leave it.**
- **Outsiders can easily enter through an unlocked door when you slow down or stop your vehicle. Locking your doors can help prevent this from happening.**

There are several ways to lock and unlock your vehicle.

From the outside, use your key or the remote keyless entry transmitter.

To unlock the driver's door from the outside with the key, insert the key and turn it toward the front of the vehicle. If your vehicle has power door locks, you may be able to unlock all of the doors and the liftgate by inserting the key, turning it toward the front of the vehicle, and holding it there for one second. To lock the driver's door from the outside with your key, insert the key and turn it toward the rear of the vehicle. If your vehicle has power door locks, you may be able to lock all of the doors when you insert the key and turn it toward the rear of the vehicle.

Downloaded from www.Manualslib.com manuals search engine

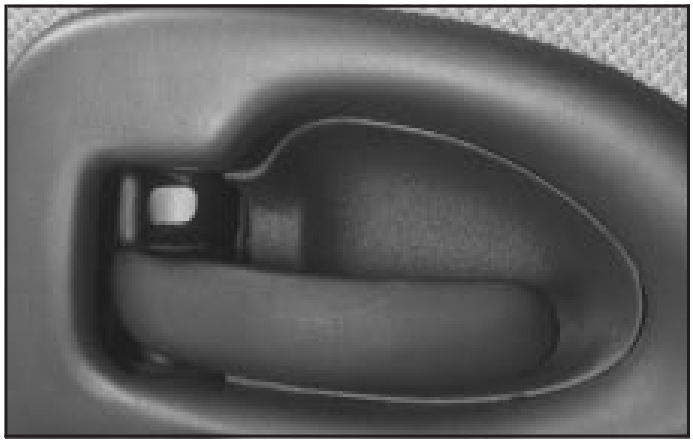

From the inside, use the manual or power door locks.

To unlock either front door from the inside, pull back on the manual lever. To lock either front door from the inside, push the manual lever forward.

Power Door Locks

From the inside, press the front of the power door lock switch, located on either front door, to unlock all doors and the liftgate. With the content theft-deterrent system, the power door lock switch will not unlock the doors until the system is disarmed. See *Content Theft-Deterrent on page 2-26* for more details.

Downloaded from www.Manualslib.com manuals search engine

You can lock all doors and the liftgate from the inside by pressing the rear of the power lock switch on either front door. With the content theft-deterrent system, the power door lock switch may cause the system to arm. See *Content Theft-Deterrent on page 2-26* for more details.

If the liftgate has been unlocked with the power door locks, you will not need the key to open it. Squeeze the handle located above the license plate to open the liftgate. This is also true if you use the remote keyless entry transmitter. See *Remote Keyless Entry System on page 2-4*.

Last Door Closed Locking

The last door closed locking feature will delay the power locking of the doors and liftgate for up to five seconds after exiting the vehicle, when the power door lock switch or the lock button on the remote keyless entry transmitter is used to lock your vehicle.

To cancel this delay, press the power door lock switch or the lock button on the remote keyless entry transmitter a second time immediately.

If any door or the liftgate is open when locking the vehicle, three chimes will be heard signaling that last door closed locking is being used. Five seconds after the last door is closed, all of the doors will lock.

If the ignition is in RUN or ACCESSORY, this feature will not lock the doors.

To turn the last door closed locking feature off or on, see *Vehicle Personalization on page 2-57*.

Downloaded from www.Manualslib.com manuals search engine

Programmable Automatic Door Locks

All of the doors will lock automatically when you move your shift lever out of PARK (P). All doors will unlock automatically when the ignition is turned off while the shift lever is in PARK (P).

If someone needs to get out while you are not in PARK (P), have that person use the manual lever or the power door lock switch. When the door is closed again, it will not lock automatically. Use the manual lever or the power door lock switch to lock the door.

To change the way automatic door locks operate, see *Vehicle Personalization on page 2-57*.

With the automatic door locks feature, you can lock or unlock the doors at any time, either manually or using the power door lock switches.

Sliding Door Delayed Locking

If either sliding door is open when you use the power door locks to lock the vehicle, the sliding door that is open will not lock. Normally the last door closed locking feature will be used to lock the sliding door after it has been closed.

When the ignition is on or if the last door closed locking feature has been overridden or programmed to be off, the sliding door delayed locking feature will lock your sliding door for you. Three seconds after a sliding door is closed, all the doors will lock.

Lockout Protection

The lockout protection feature makes it difficult for you to lock your keys in your vehicle. If the driver's door is open while the keys are in the ignition, a chime will sound and you will not be able to use your power door lock switch to lock the vehicle.

If you don't leave the keys in the ignition or if you use the manual door lock, you could still lock your keys in your vehicle. Always remember to take your keys with you.

To turn this feature off or on, see *Vehicle Personalization on page 2-57*.

Downloaded from www.Manualslib.com manuals search engine

Dual Sliding Doors

To open either sliding door from outside the vehicle, pull the handle out and then pull the door toward the rear. If you slide the door all the way back, the door will rest in a detent position.

To move the door forward, you must first pull the door past the open detent position.

The driver's side sliding door is designed to open only a little if the fuel door is open. If this ever happens, don't try to force the sliding door. Just close the driver's side sliding door. Then when the fuel filler door is closed, the driver's side sliding door can be opened normally.

Sliding Door Lock

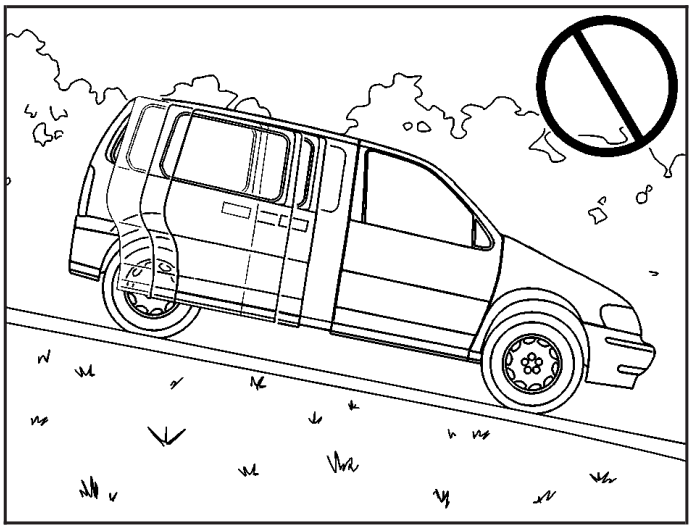

Downloaded from www.Manualslib.com manuals search engine

⚠ CAUTION:

If your vehicle is facing downward on a steep grade (15 percent or more), the door may not stay open and could slam shut, possibly injuring someone. To make sure the door does not slam shut be sure to hold it open until everyone is clear of the door, and only then allow it to slowly close.

Lock either sliding door from inside the vehicle by moving the manual lever down. Unlock it by moving the lever up.

With the power door locks, the sliding door lock has a delay feature. See *Power Door Locks on page 2-10* and *Vehicle Personalization on page 2-57*.

Downloaded from www.Manualslib.com manuals search engine

Sliding Door Security Lock

Your vehicle is equipped with a sliding door security lock that helps prevent young children or other passengers from opening the sliding door(s) using the inside door handle. To use one of these locks, do the following:

1. Open the sliding door.

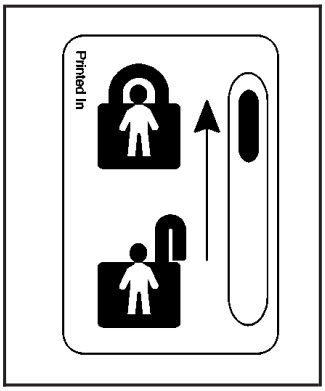

2. On the inside of the sliding door(s), on the front edge of the door will be a lock. Push the lever up to engage the lock.
3. Close the door.
4. Repeat Steps 1 through 3 for the other door.

If your vehicle has the power sliding door(s), you can override the security lock by pressing either power door lock switch while the power sliding door override switch(es) is turned off. If the power sliding door override switch(es) is turned on, the power sliding door(s) cannot be opened from the inside while the sliding door security lock is in use.

If you want to open the sliding door while the security lock is on, unlock and open the door from the outside.

You should let adults and older children know how the security lock works, and how to cancel the lock. If you don't, adults or older children who ride in the rear won't be able to open the sliding door from the inside while the security lock feature is in use.

Canceling the Sliding Door Security Lock

1. Unlock the sliding door and open the door from the outside.
2. Push the security lock lever all the way down.
3. Close the door.
4. Repeat Steps 1 through 3 for the other door.

The sliding door lock will now work normally.

Downloaded from www.Manualslib.com manuals search engine

Power Sliding Door (PSD)

If your vehicle has this feature, you can open and close the sliding door(s) using the switches inside of your vehicle. You can also operate the power sliding door(s) with your remote keyless entry transmitter. See *Remote Keyless Entry System on page 2-4*.

⚠ CAUTION:

Leaving your children or pets unattended in your vehicle can be dangerous. They could operate the power sliding door. A child or others could be injured. Do not leave children or pets unattended in your vehicle.

To help avoid accidental operation of the sliding door(s), press the part of the power sliding door override switch(es) with the don't symbol.

To open or close the sliding door(s), press and release one of the following power door switches.

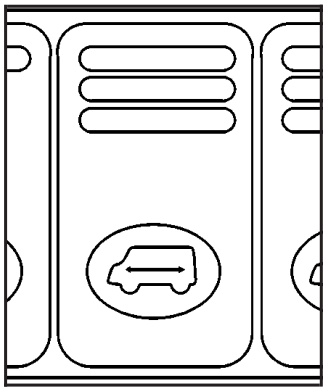

Power Sliding Door

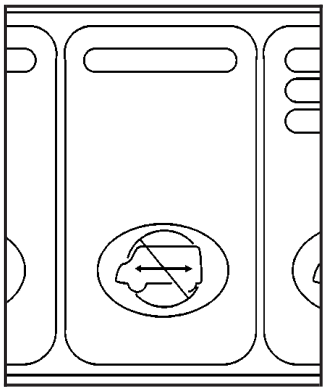

Power Sliding Door Override

If you have the one power sliding door, these switches are located in the overhead console switchbank.

Downloaded from www.Manualslib.com manuals search engine

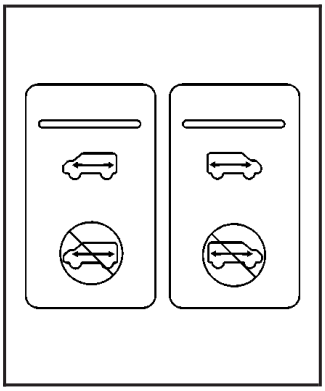

If you have the dual sliding doors, your vehicle has these switches. The left switch is for the driver's side power sliding door and the right switch is for the passenger's side sliding door. The power sliding door and the power sliding door override is one switch.

Press the part of the switch(es) with the "don't" symbol to turn the power to the sliding door(s) off. When the power sliding door(s) is off, you will not be able to open the door(s) by using the power sliding door switch(es) located on the overhead console switchbank, the switch in front of the driver's or the passenger's side sliding door, or the remote keyless entry transmitter.

Notice: **If you leave the power sliding door on when you go through an automatic car wash, the door may accidentally open. Be sure the power sliding door is turned off when going through a car wash.**

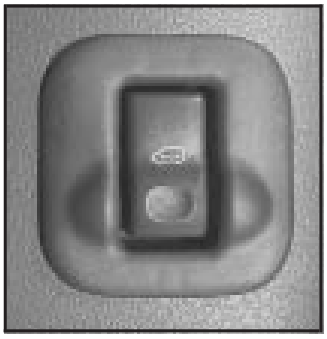

This switch is in front of the driver's or the passenger's side sliding door.

The power sliding door override switch(es) will also stop the door(s) immediately, while the door(s) is opening or closing, when the override switch(es) is turned on.

The power sliding door(s) will only open if the transaxle is in PARK (P). The transaxle does not have to be in PARK (P) to close the door(s).

If the power sliding door(s) is open or in the process of closing when you shift out of PARK (P), a buzzer will sound. This is a warning that the sliding door(s) is not completely closed.

If the power to the sliding door(s) is turned off, the buzzer will not sound indicating the door(s) is not completely closed.

Downloaded from www.Manualslib.com manuals search engine

⚠ CAUTION:

If you shift the transaxle out of PARK (P) and accelerate before the power sliding door latches closed, the door may reverse to the open position. A child or others could fall out of the vehicle and be injured. Always make sure the power sliding door is closed and latched before you drive away.

If an object obstructs the power sliding door(s) while it is closing, the door will automatically reverse to the open position, provided it meets sufficient resistance. Resistance must be as strong as the force of the closing door, or stronger. The force of the closing door increases significantly as the door approaches the latched position.

The driver's side sliding door is designed to open only a little if the fuel door is open. If this ever happens, do not try to force the sliding door. When the fuel filler door is closed, the driver's side sliding door can be opened normally.

⚠ CAUTION:

You or others could be injured if caught in the path of the sliding door. Make sure the door path is clear before closing the door.

If you want to open the power sliding door(s) when the override switch(es) is turned off, pull the inside or outside handle and let go. The door will open fully.

Downloaded from www.Manualslib.com manuals search engine

To open the power sliding door(s) when the power sliding door override switch(es) is on, pull the inside or outside handle and slide the door all the way back.

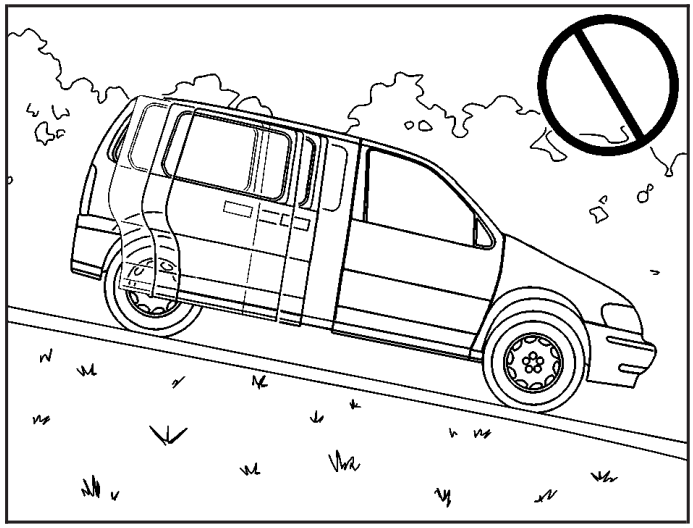

⚠ CAUTION:

If your vehicle is facing downward on a steep grade (15 percent or more), the door may not stay open and could slam shut, possibly injuring someone. To make sure the door does not slam shut, turn on the power sliding door feature. Then if the door closes, it will close under the control of the power door system.

If you want to close the power sliding door(s) when the override switch(es) is turned off, pull the inside or outside handle or the edge of the door. Move the door about 4 inches (10 cm) toward the closed position and release it. The door will close completely and latch for you.

To close the power sliding door(s) when the override switch(es) is turned on, pull the inside or outside handle and slide the door all the way forward to the latched position.

Downloaded from www.Manualslib.com manuals search engine

Resetting the Power Sliding Door

The power sliding door may operate incorrectly or not at all because of the following conditions:

- A low voltage or dead battery
- A disconnected battery
- If the instrument panel PWR/HEATED SEAT PSD fuse or the underhood fuse 8, 27, or 29 are removed or blown.

See *Fuses and Circuit Breakers on page 5-93* for more information about your fuse panel.

If any of these conditions occur, the power sliding door will need to be reset. If your vehicle has the dual power sliding doors, both doors will have to be reset. To reset a door, do the following:

1. Check to be sure the power sliding door is unlocked and securely closed.
2. Turn the ignition key to OFF.
3. If the power sliding door override is on, press the textured end of the power sliding door override switch to turn it off.
4. Remove fuse 29 from the underhood fuse block. Leave it out for 30 seconds.
5. Reinstall the fuse and wait 10 seconds.
6. Turn the power sliding door override on by pressing the end of the switch with the override symbol on it.
7. Press the power sliding door switch(es) to open the power sliding door.
8. Open the door all of the way.
9. Wait five seconds and close the door by pressing the power sliding door switch(es).
10. Wait five seconds and repeat Steps 7 through 9.

If the door does not rest in the fully open position after repeating Step 7, repeat Steps 7 through 9 again. If the door still does not operate correctly, see your dealer for service.

Downloaded from www.Manualslib.com manuals search engine

Liftgate

To unlock or lock the liftgate from the outside, use the remote keyless entry transmitter. For more information, see *Remote Keyless Entry System Operation on page 2-5*.

Open the liftgate using the handle located above the license plate. Once slightly opened, the liftgate will rise by itself. Lamps in the rear of the vehicle will come on, illuminating the rear cargo area.

Notice: **If you open the liftgate without checking for overhead obstructions such as a garage door, you could break the liftgate glass. Always check to make sure the area above the liftgate is clear before opening it.**

⚠ CAUTION:

It can be dangerous to drive with the liftgate open because carbon monoxide (CO) gas can come into your vehicle. You can't see or smell CO. It can cause unconsciousness and even death. If you must drive with the liftgate open or if electrical wiring or other cable connections must pass through the seal between the body and the liftgate:

- **Make sure all other windows are shut.**
- **Turn the fan on your heating or cooling system to its highest speed and select the control setting that will force outside air into your vehicle. See *Climate Control System on page 3-26*.**
- **If you have air outlets on or under the instrument panel, open them all the way. See *Engine Exhaust on page 2-40*.**

Downloaded from www.Manualslib.com manuals search engine

To close the liftgate, pull down on the handle, then firmly shut the liftgate. Don't drive with the liftgate open, even slightly. See *Engine Exhaust on page 2-40*.

A message in your instrument panel cluster will warn you if the liftgate is not completely closed. See *Rear Hatch Ajar Warning Message on page 3-50*.

Downloaded from www.Manualslib.com manuals search engine

Windows

⚠ CAUTION:

Leaving children, helpless adults, or pets in a vehicle with the windows closed is dangerous. They can be overcome by the extreme heat and suffer permanent injuries or even death from heat stroke. Never leave a child, a helpless adult, or a pet alone in a vehicle, especially with the windows closed in warm or hot weather.

Downloaded from www.Manualslib.com manuals search engine

Power Windows

If your vehicle has power windows, the switches on the driver's door armrest control the front windows when the ignition is in RUN, ACCESSORY or when Retained Accessory Power (RAP) is active. See *Retained Accessory Power (RAP) on page 2-31*.

The driver's power window switch has two down positions. The first position lowers the window normally.

To raise the window, pull up the front of the switch.

Express-Down Window

To activate the express-down feature, push the AUTO switch all the way down to the second position, then release it. The window will lower completely. To stop the window from lowering all the way, pull up on the front of the switch.

Downloaded from www.Manualslib.com manuals search engine

Power Rear Quarter Windows

Your vehicle may have power rear quarter windows.

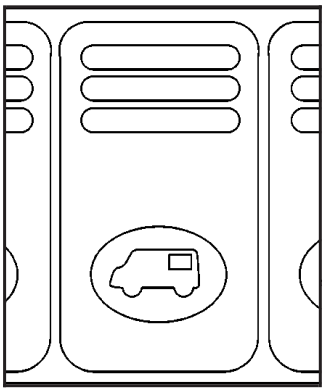

This switch, located in the overhead console switchbank, is used for opening and closing the power rear quarter windows.

Press the textured part of the switch to open the windows; both windows will open. The windows will continue to open as long as the switch is pressed, until they are fully opened.

Press the part of the switch with the symbol to close both windows. The windows can be closed fully or partially, depending on how long the switch is pressed.

The ignition must be in RUN, ACCESSORY, or Retained Accessory Power (RAP) must be active, to use the power rear quarter windows. See *Retained Accessory Power (RAP) on page 2-31*.

Sun Visors

To block out glare, you can swing down the visors. You can also remove them from the center mount and swing them to the side.

Visor Vanity Mirror

Your vehicle may have a visor vanity mirror. Pull down the sun visor to access the vanity mirror.

Lighted Vanity Mirror

Your vehicle may have a lighted vanity mirror. Pull down the sun visor and flip up the cover to expose the vanity mirror. The lamps will come on when you flip up the cover.

Theft-Deterrent Systems

Vehicle theft is big business, especially in some cities. Although your vehicle has a number of theft-deterrent features, we know that nothing we put on it can make it impossible to steal.

Downloaded from www.Manualslib.com manuals search engine

Content Theft-Deterrent

Your vehicle may have a theft-deterrent alarm system.

A light located on top of your instrument panel, near the center of the vehicle next to the windshield, will flash slowly to let you know that the system has been armed.

While armed, the doors will not unlock with the power door lock switch.

Once armed, the alarm will go off if someone tries to enter the vehicle without using the remote keyless entry transmitter or a key, or turns the ignition to ON. The horn will sound and the parking lamps will flash for up to two minutes.

When the alarm is armed, the liftgate may be opened with the remote keyless entry transmitter.

Arming with the Power Lock Switch

Your alarm system will arm when you use either power door lock switch to lock the doors while any door or the liftgate is open and the key is removed from the ignition. If you would like to turn on power door lock switch arming, see *Vehicle Personalization on page 2-57*.

When the security light flashes quickly the system is ready to arm with the power door lock switches. Then the security light will stop flashing and stay on when you press the rear of the power door lock switch, to let you know the system is arming. After all doors and the liftgate are closed and locked, the security light will begin flashing at a very slow rate to let you know the system is armed.

Downloaded from www.Manualslib.com manuals search engine

Arming with the Remote Keyless Entry Transmitter

Your alarm system will arm when you use your remote keyless entry transmitter to lock the doors, if the key is not in the ignition. The security light will turn on to let you know the system is arming. After all doors and the liftgate are closed and locked, the security light will begin flashing at a very slow rate to let you know the system is armed.

Arming with Your Key

Your alarm system will arm when you use your key to lock the driver's door. The security light will turn on to let you know the system is arming. After all doors and the liftgate are closed and locked, the security light will begin flashing at a very slow rate to let you know the system is armed. If you would like your key not to arm the system, see *Vehicle Personalization on page 2-57*.

Arming Confirmation

If remote unlock confirmation is on, your parking lamps will flash briefly to let you know when your alarm system has disarmed. If you would not like the parking lamps to flash, see *Vehicle Personalization on page 2-57*.

Disarming with the Remote Keyless Entry Transmitter

Your alarm system will disarm when you use your remote keyless entry transmitter to unlock the doors. The security light will stop flashing to let you know the system is no longer armed.

Disarming with Your Key

Your alarm system will disarm when you use your key to unlock the driver's door. The security light will stop flashing to let you know the system is no longer armed. If you would like your key not to disarm the alarm system, see *Vehicle Personalization on page 2-57*.

Downloaded from www.Manualslib.com manuals search engine

PASS-Key® III

Your PASS-Key® III system operates on a radio frequency subject to Federal Communications Commission (FCC) Rules and with Industry Canada.

This device complies with Part 15 of the FCC Rules. Operation is subject to the following two conditions:

1. This device may not cause harmful interference.
2. This device must accept any interference received, including interference that may cause undesired operation.

This device complies with RSS-210 of Industry Canada. Operation is subject to the following two conditions:

1. This device may not cause interference.
2. This device must accept any interference received, including interference that may cause undesired operation of the device.

Changes or modifications to this system by other than an authorized service facility could void authorization to use this equipment.

PASS-Key® III uses a radio frequency transponder in the key that matches a decoder in your vehicle.

PASS-Key® III Operation

Your vehicle is equipped with the PASS-Key® III (Personalized Automotive Security System) theft-deterrent system. PASS-Key® III is a passive theft deterrent system. This means you do not have to do anything different to arm or disarm the system. It works when you insert or remove the key from the ignition.

When the PASS-Key® III system senses that someone is using the wrong key, it shuts down the vehicle's starter and fuel systems. The starter will not work and fuel will stop being delivered to the engine. Anyone using a trial-and-error method to start the vehicle will be discouraged because of the high number of electrical key codes.

If the engine does not start and the security message comes on, the key may have a damaged transponder. Turn the ignition off and try again.

Downloaded from www.Manualslib.com manuals search engine

If the engine still does not start, and the key appears to be undamaged, try another ignition key. At this time, you may also want to check the instrument panel PASS KEY fuse. If the engine still does not start with the other key, your vehicle needs service. If your vehicle does start, the first key may be faulty. See your dealer or a locksmith who can service the PASS-Key® III to have a new key made. See *Fuses and Circuit Breakers on page 5-93*.

It is possible for the PASS-Key® III decoder to learn the transponder value of a new or replacement key. Up to 10 additional keys may be programmed for the vehicle. This procedure is for learning additional keys only. If all the currently programmed keys are lost or do not operate, you must see your dealer or a locksmith who can service PASS-Key® III to have keys made and programmed to the system.

See your dealer or a locksmith who can service PASS-Key® III to get a new key blank that is cut exactly as the ignition key that operates the system.

Canadian Owners: If you lose or damage your keys, only a GM dealer can service PASS-Key® III to have new keys made. To program additional keys you will need two current driver's keys, black in color. You must add a step to the following procedure. After Step 3, repeat Steps 1 through 3 with the second current driver's key. Then continue with Step 4.

To program the new key, do the following:

1. Verify the new key has PK3 stamped on it.
2. Insert the ignition key in the ignition and start the engine. If the engine will not start, see your dealer for service.
3. After the engine has started, turn the key to OFF and remove the key.
4. Insert the key to be programmed and turn it to RUN within 10 seconds of removing the previous key.
5. The security message will turn off once the key has been programmed. It may not be apparent that the security message went on due to how quickly the key is programmed.
6. Repeat Steps 1 through 4 if additional keys are to be programmed.

If you are ever driving and the security message comes on and stays on, you will be able to restart your engine if you turn it off. Your PASS-Key® III system, however, is not working properly and must be serviced by your dealer. Your vehicle is not protected by the PASS-Key® III system at this time.

If you lose or damage a PASS-Key® III key, see your dealer or a locksmith who can service PASS-Key® III to have a new key made.

Downloaded from www.Manualslib.com manuals search engine

Starting and Operating Your Vehicle

New Vehicle Break-In

Notice: **Your vehicle does not need an elaborate break-in. But it will perform better in the long run if you follow these guidelines:**

- **Do not drive at any one speed — fast or slow — for the first 500 miles (805 km). Do not make full-throttle starts.**
- **Avoid making hard stops for the first 200 miles (322 km) or so. During this time your new brake linings are not yet broken in. Hard stops with new linings can mean premature wear and earlier replacement. Follow this breaking-in guideline every time you get new brake linings.**
- **Do not tow a trailer during break-in. See *Towing a Trailer on page 4-36* for more information.**

Ignition Positions

With the key in the ignition, you can turn it to five different positions.

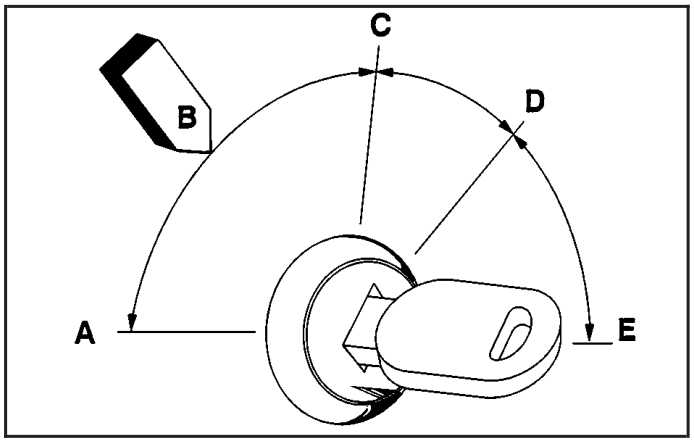

A (ACCESSORY): This is the position in which you can operate your electrical accessories. Press in the ignition switch as you turn the top of the key toward you.

Downloaded from www.Manualslib.com manuals search engine

B (LOCK): This is the only position from which you can remove the key. This position locks your ignition and transaxle.

Notice: **Using a tool to force the key from the ignition switch could cause damage or break the key. Use the correct key and turn the key only with your hand. Make sure the key is all the way in. If none of this works, then your vehicle needs service.**

C (OFF): This position unlocks the ignition and transaxle, but does not send power to any accessories. Use this position if your vehicle must be pushed or towed, but never try to push-start your vehicle.

D (RUN): This is the position to which the switch returns after you start your engine and release the ignition key. This is the position for driving. Even when the engine is not running, you can use RUN to operate your electrical accessories and to display some instrument panel warning lights.

E (START): This position starts the engine. When the engine starts, release the ignition key. The switch will return to RUN for normal driving.

If the engine is not running, ACCESSORY and RUN are positions that allow you to operate your electrical accessories, such as the radio.

Retained Accessory Power (RAP)

If the vehicle has Retained Accessory Power (RAP), certain features will continue to operate for up to 10 minutes after the ignition key is turned to OFF unless a door is opened.

Starting Your Engine

Move your shift lever to PARK (P) or NEUTRAL (N). Your engine will not start in any other position — that is a safety feature. To restart when you are already moving, use NEUTRAL (N) only.

Notice: **Shifting into PARK (P) with the vehicle moving could damage the transaxle. Shift into PARK (P) only when your vehicle is stopped.**

1. With your foot off the accelerator pedal, turn your ignition key to START. When the engine starts, let go of the key. The idle speed will go down as your engine warms up.

Downloaded from www.Manualslib.com manuals search engine

Notice: **Holding your key in START for longer than 15 seconds at a time will cause your battery to be drained much sooner. And the excessive heat can damage your starter motor. Wait about 15 seconds between each try to help avoid draining your battery or damaging your starter.**

2. If the engine does not start in 10 seconds, push the accelerator pedal about one-quarter of the way down while you turn the key to START. Do this until the engine starts. As soon as it does, let go of the key.
3. If your engine still will not start, or starts but then stops, it could be flooded with too much gasoline. Try pushing your accelerator pedal all the way to the floor and holding it there as you hold the key in START for a maximum of 15 seconds. This clears the extra gasoline from the engine. If the engine still will not start, or starts briefly but then stops again, repeat Step 1 or 2, depending on the temperature. When the engine starts, release the key and the accelerator pedal.

Notice: **Your engine is designed to work with the electronics in your vehicle. If you add electrical parts or accessories, you could change the way the engine operates. Before adding electrical equipment, check with your dealer. If you do not, your engine might not perform properly.**

Engine Coolant Heater

Your vehicle may have an engine coolant heater. In very cold weather, 0°F (–18°C) or colder, the engine coolant heater can help. You will get easier starting and better fuel economy during engine warm-up. Usually, the coolant heater should be plugged in a minimum of four hours prior to starting your vehicle. At temperatures above 32°F (0°C), use of the coolant heater is not required.

To Use the Engine Coolant Heater

1. Turn off the engine.
2. Open the hood and unwrap the electrical cord. The electrical cord is located on the driver's side of the engine compartment.
3. Plug it into a normal, grounded 110-volt AC outlet.

Downloaded from www.Manualslib.com manuals search engine

⚠ CAUTION:

Plugging the cord into an ungrounded outlet could cause an electrical shock. Also, the wrong kind of extension cord could overheat and cause a fire. You could be seriously injured. Plug the cord into a properly grounded three-prong 110-volt AC outlet. If the cord will not reach, use a heavy-duty three-prong extension cord rated for at least 15 amps.

4. Before starting the engine, be sure to unplug and store the cord as it was before to keep it away from moving engine parts. If you do not, it could be damaged.

How long should you keep the coolant heater plugged in? The answer depends on the outside temperature, the kind of oil you have, and some other things. Instead of trying to list everything here, we ask that you contact your dealer in the area where you will be parking your vehicle. The dealer can give you the best advice for that particular area.

Automatic Transaxle Operation

P R N D 3 2 1

Maximum engine speed is limited when you are in PARK (P) or NEUTRAL (N), to protect driveline components from improper operation.

There are several different positions for your shift lever.

PARK (P): This gear position locks your front wheels. It is the best position to use when you start your engine because your vehicle cannot move easily.

Ensure the shift lever is fully in PARK (P) before starting the engine. Your vehicle has an automatic transaxle shift lock control system. You have to fully apply your regular brakes before you can shift from PARK (P) when the ignition key is in RUN. As you step on the brake pedal while in PARK (P), you may hear a click from the solenoid of the system. This ensures that the system is operating properly.

Downloaded from www.Manualslib.com manuals search engine

If you cannot shift out of PARK (P), ease pressure on the shift lever – push the shift lever all the way into PARK (P) as you maintain brake application. Then move the shift lever into the gear you wish. See *Shifting Out of Park (P) on page 2-39*.

⚠ CAUTION:

It is dangerous to get out of your vehicle if the shift lever is not fully in PARK (P) with the parking brake firmly set. Your vehicle can roll.

Do not leave your vehicle when the engine is running unless you have to. If you have left the engine running, the vehicle can move suddenly. You or others could be injured. To be sure your vehicle will not move, even when you are on fairly level ground, always set your parking brake and move the shift lever to PARK (P). See *Shifting Into Park (P) on page 2-38*. If you are pulling a trailer, see *Towing a Trailer on page 4-36*.

REVERSE (R): Use this gear to back up.

Notice: **Shifting to REVERSE (R) while your vehicle is moving forward could damage the transaxle. The repairs would not be covered by your warranty. Shift to REVERSE (R) only after your vehicle is stopped.**

To rock your vehicle back and forth to get out of snow, ice or sand without damaging your transaxle, see *If You Are Stuck: In Sand, Mud, Ice or Snow on page 4-28*.

NEUTRAL (N): In this position, your engine does not connect with the wheels. To restart when you are already moving, use NEUTRAL (N) only. Also, use NEUTRAL (N) when your vehicle is being towed.

⚠ CAUTION:

Shifting into a drive gear while your engine is running at high speed is dangerous. Unless your foot is firmly on the brake pedal, your vehicle could move very rapidly. You could lose control and hit people or objects. Do not shift into a drive gear while your engine is running at high speed.

Downloaded from www.Manualslib.com manuals search engine

Notice: **Shifting out of PARK (P) or NEUTRAL (N) with the engine racing may damage the transaxle. The repairs would not be covered by your warranty. Be sure the engine is not racing when shifting your vehicle.**

AUTOMATIC OVERDRIVE (D): This position is for normal driving. If you need more power for passing, and you are:

- Going less than 35 mph (55 km/h), push your accelerator pedal about halfway down.
- Going about 35 mph (55 km/h) or more, push the accelerator all the way down.

You will shift down to the next gear and have more power.

Notice: **If your vehicle seems to start up rather slowly or not shift gears when you go faster, and you continue to drive your vehicle that way, you could damage the transaxle. Have your vehicle serviced right away. You can drive in SECOND (2) when you are driving less than 35 mph (55 km/h) and AUTOMATIC OVERDRIVE (D) for higher speeds until then.**

Warm-Up Shift

Your vehicle has a computer controlled transaxle designed to warm up the engine faster when the outside temperature is 35°F (2°C) or colder. You may notice that the transaxle will shift at a higher vehicle speed until the engine is warmed up. This is a normal condition designed to provide heat to the passenger compartment and defrost the windows more quickly. See *Climate Control System on page 3-26* for more information.

THIRD (3): This position is also used for normal driving, but it offers more power and lower fuel economy than AUTOMATIC OVERDRIVE (D).

Here are some times you might choose THIRD (3) instead of AUTOMATIC OVERDRIVE (D):

- When driving on hilly, winding roads
- When towing a trailer, so there is less shifting between gears
- When going down a steep hill

Downloaded from www.Manualslib.com manuals search engine

SECOND (2): This position gives you more power but lower fuel economy than THIRD (3). You can use SECOND (2) on hills. It can help control your speed as you go down steep mountain roads, but then you would also want to use your brakes off and on.

Notice: **Driving in SECOND (2) for more than 25 miles (40 km) or at speeds over 55 mph (90 km/h) may damage the transaxle. Also, shifting into SECOND (2) at speeds above 65 mph (105 km/h) can cause damage. Drive in THIRD (3) or AUTOMATIC OVERDRIVE (D) instead of SECOND (2).**

Notice: **If your vehicle seems to start up rather slowly, or if it seems not to shift gears as you go faster, something may be wrong with a transaxle system sensor. If you drive very far that way, your vehicle can be damaged. So, if this happens, have your vehicle serviced right away. Until then, you can use SECOND (2) when you are driving less than 35 mph (55 km/h) and THIRD (3) for higher speeds.**

FIRST (1): This position gives you even more power but lower fuel economy than SECOND (2). You can use it on very steep hills, or in deep snow or mud. If the shift lever is put in FIRST (1), the transaxle will not downshift into first gear until the vehicle is going slow enough.

Notice: **Spinning the tires or holding the vehicle in one place on a hill using only the accelerator pedal may damage the transaxle. If you are stuck, do not spin the tires. When stopping on a hill, use the brakes to hold the vehicle in place.**

Downloaded from www.Manualslib.com manuals search engine

Parking Brake

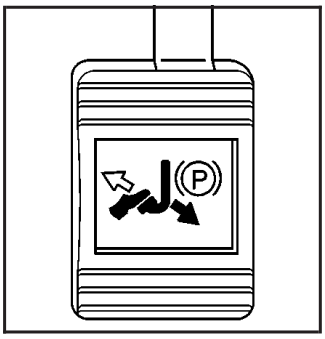

The parking brake is located under the instrument panel on the driver's side of the vehicle.

To set the parking brake, hold the regular brake pedal down with your right foot and push down on the parking brake pedal with your left foot.

If the ignition is on, the brake system warning light will come on. See *Brake System Warning Light on page 3-39*.

To release the parking brake, hold the regular brake pedal down with your right foot while you push down on the parking brake pedal with your left foot. When you lift your left foot from the parking brake pedal, it will pop up to the released position.

Notice: **Driving with the parking brake on can overheat the brake system and cause premature wear or damage to brake system parts. Verify that the parking brake is fully released and the brake warning light is off before driving.**

If you are towing a trailer and are parking on any hill, see *Towing a Trailer on page 4-36*.

Downloaded from www.Manualslib.com manuals search engine

Shifting Into Park (P)

⚠ CAUTION:

It can be dangerous to get out of your vehicle if the shift lever is not fully in PARK (P) with the parking brake firmly set. Your vehicle can roll. If you have left the engine running, the vehicle can move suddenly. You or others could be injured. To be sure your vehicle will not move, even when you are on fairly level ground, use the steps that follow. If you are pulling a trailer, see *Towing a Trailer on page 4-36*.

1. Hold the brake pedal down with your right foot and set the parking brake with your left foot.
2. Move the shift lever into PARK (P) by pulling the shift lever toward you and moving it up as far as it will go.
3. Turn the ignition key to LOCK.
4. Remove the key and take it with you. If you can leave your vehicle with the ignition key in your hand, your vehicle is in PARK (P).

Leaving Your Vehicle With the Engine Running

⚠ CAUTION:

It can be dangerous to leave your vehicle with the engine running. Your vehicle could move suddenly if the shift lever is not fully in PARK (P) with the parking brake firmly set. And, if you leave the vehicle with the engine running, it could overheat and even catch fire. You or others could be injured. Do not leave your vehicle with the engine running.

If you have to leave your vehicle with the engine running, be sure your vehicle is in PARK (P) and the parking brake is firmly set before you leave it. After you move the shift lever into PARK (P), hold the regular brake pedal down. Then, see if you can move the shift lever away from PARK (P) without first pulling it toward you. If you can, it means that the shift lever was not fully locked into PARK (P).

Downloaded from www.Manualslib.com manuals search engine

Torque Lock

If you are parking on a hill and you do not shift your vehicle into PARK (P) properly, the weight of the vehicle may put too much force on the parking pawl in the transmission. You may find it difficult to pull the shift lever out of PARK (P). This is called torque lock.
To prevent torque lock, set the parking brake and then shift into PARK (P) properly before you leave the driver's seat. To find out how, see *Shifting Into Park (P) on page 2-38*.

When you are ready to drive, move the shift lever out of PARK (P) before you release the parking brake.

If torque lock does occur, you may need to have another vehicle push yours a little uphill to take some of the pressure from the parking pawl in the transmission, so you can pull the shift lever out of PARK (P).

Shifting Out of Park (P)

Your vehicle has an automatic transaxle shift lock control system which locks the shift lever in PARK (P) when the ignition is in the OFF position. In addition, you must fully apply your regular brakes before you can shift from PARK (P) when the ignition is in the RUN position. See *Automatic Transaxle Operation on page 2-33*.

If you cannot shift out of PARK (P), ease pressure on the shift lever and push the shift lever all the way up into PARK (P) as you maintain brake application. Then, move the shift lever into the gear you want.

If you ever hold the brake pedal down but still cannot shift out of PARK (P), do the following:

1. Turn the ignition key to the OFF position.
2. Apply and hold the brake until the end of Step 4.
3. Shift the transaxle to NEUTRAL (N).
4. Start the engine and then shift to the gear you want.
5. Have the system fixed as soon as you can.

Downloaded from www.Manualslib.com manuals search engine

Parking Over Things That Burn

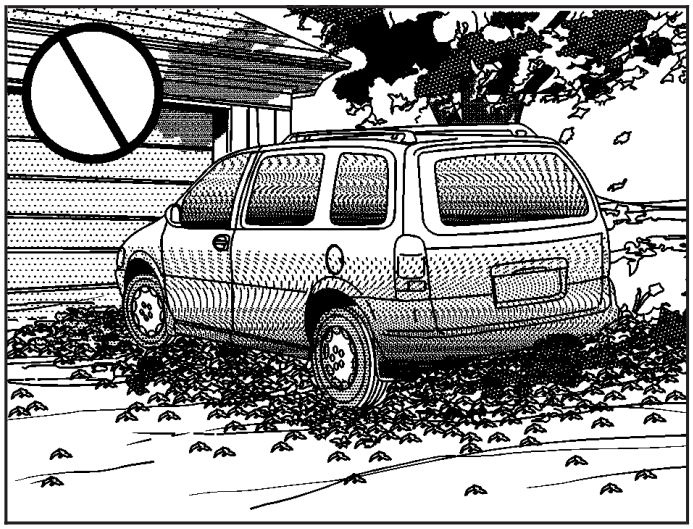

⚠ CAUTION:

Things that can burn could touch hot exhaust parts under your vehicle and ignite. Do not park over papers, leaves, dry grass or other things that can burn.

Engine Exhaust

⚠ CAUTION:

Engine exhaust can kill. It contains the gas carbon monoxide (CO), which you cannot see or smell. It can cause unconsciousness and death.

You might have exhaust coming in if:

- **Your exhaust system sounds strange or different.**
- **Your vehicle gets rusty underneath.**
- **Your vehicle was damaged in a collision.**
- **Your vehicle was damaged when driving over high points on the road or over road debris.**
- **Repairs were not done correctly.**
- **Your vehicle or exhaust system had been modified improperly.**

If you ever suspect exhaust is coming into your vehicle:

- **Drive it only with all the windows down to blow out any CO; and**
- **Have your vehicle fixed immediately.**

Downloaded from www.Manualslib.com manuals search engine

Running Your Engine While You Are Parked

It is better not to park with the engine running. But if you ever have to, here are some things to know.

⚠ CAUTION:

Idling the engine with the climate control system off could allow dangerous exhaust into your vehicle. See the earlier caution under *Engine Exhaust on page 2-40*.

Also, idling in a closed-in place can let deadly carbon monoxide (CO) into your vehicle even if the climate control fan is at the highest setting. One place this can happen is a garage. Exhaust — with CO — can come in easily. NEVER park in a garage with the engine running.

Another closed-in place can be a blizzard. See *Winter Driving on page 4-24*.

⚠ CAUTION:

It can be dangerous to get out of your vehicle if the shift lever is not fully in PARK (P) with the parking brake firmly set. Your vehicle can roll. Do not leave your vehicle when the engine is running unless you have to. If you have left the engine running, the vehicle can move suddenly. You or others could be injured. To be sure your vehicle will not move, even when you are on fairly level ground, always set your parking brake and move the shift lever to PARK (P).

Follow the proper steps to be sure your vehicle will not move. See *Shifting Into Park (P) on page 2-38*.

If you are pulling a trailer, see *Towing a Trailer on page 4-36*.

Downloaded from www.Manualslib.com manuals search engine

Mirrors

Manual Rearview Mirror

The manual rearview mirror can be adjusted for day or night driving by pushing or pulling the tab at the bottom of the mirror.

Outside Power Mirrors

The control located on the driver's door operates both outside rearview mirrors.

Turn the control counterclockwise or clockwise to select either the driver's or passenger's side rearview mirror.

Use the control to adjust each mirror so that a little of the side of the vehicle and the area beside and behind it can be seen in the mirrors while sitting in a comfortable driving position.

Leave the control in the center position to prevent moving the mirrors once they are adjusted.

Both outside mirrors can be folded forward or rearward. In the rearward position, they will fold almost flush with the vehicle. This feature is particularly useful in automatic car washes.

Outside Convex Mirror

⚠ CAUTION:

A convex mirror can make things (like other vehicles) look farther away than they really are. If you cut too sharply into the right lane, you could hit a vehicle on your right. Check your inside mirror or glance over your shoulder before changing lanes.

The passenger's side mirror is convex. A convex mirror's surface is curved so more can be seen from the driver's seat. It also makes things appear farther away than they really are.

Downloaded from www.Manualslib.com manuals search engine

Outside Heated Mirrors

If the vehicle has outside heated rearview mirrors, they are activated when the rear window defogger is turned on. See “Rear Window Defogger” in *Climate Control System on page 3-26*.

OnStar® System

OnStar® uses global positioning system (GPS) satellite technology, wireless communications, and call centers to provide you with a wide range of safety, security, information, and convenience services.

A complete OnStar® user’s guide and the terms and conditions of the OnStar® Subscription Service Agreement are included in the vehicle’s glove box literature. For more information, visit www.onstar.com or www.onstarcanada.com. Contact OnStar® at 1-888-4-ONSTAR (1-888-466-7827), or press the OnStar® button to speak to an OnStar® advisor 24 hours a day, 7 days a week.

Terms and conditions of the Subscription Service Agreement can be found at www.onstar.com or www.onstarcanada.com.

OnStar® Services

For new vehicles equipped with OnStar®, the Safe and Sound Plan is included for the first year. You can extend this plan beyond the first year, or upgrade to the Directions and Connections Plan to meet your needs. For more information, press the OnStar® button to speak with an advisor.

Safe and Sound Plan

- Advanced Automatic Collision Notification
- Automatic Notification of Airbag Deployment
- Emergency Services
- Roadside Assistance
- Stolen Vehicle Tracking
- AccidentAssist
- Remote Door Unlock/Vehicle Alert
- Remote Diagnostics
- Online Concierge

Directions and Connections Plan

- All Safe and Sound Plan Services
- Driving Directions
- RideAssist
- Information and Convenience Services

Downloaded from www.Manualslib.com manuals search engine

OnStar® Personal Calling

As an OnStar® subscriber, the Personal Calling capability is available if your hand-held cell phone is lost, forgotten, or has a low battery. It is a hands-free wireless phone that is integrated into the vehicle. Calls can be placed nationwide using simple voice commands with no additional contracts and no additional roaming charges. To find out more about OnStar® Personal Calling, refer to the OnStar® user's guide in the vehicle's glove box or visit www.onstar.com or www.onstarcanada.com; or speak with an OnStar® advisor by pressing the OnStar® button or by calling 1-888-4-ONSTAR (1-888-466-7827).

OnStar® Virtual Advisor

Virtual Advisor is a feature of OnStar® Personal Calling that uses minutes to access up-to-date weather and traffic reports for your area, news and sports updates, stock quotes, entertainment and more. You are also able to listen and reply to your E-mail through your vehicle's speakers. Customize your information profile at www.myonstar.com. See the OnStar® user's guide for more information.

HomeLink® Transmitter

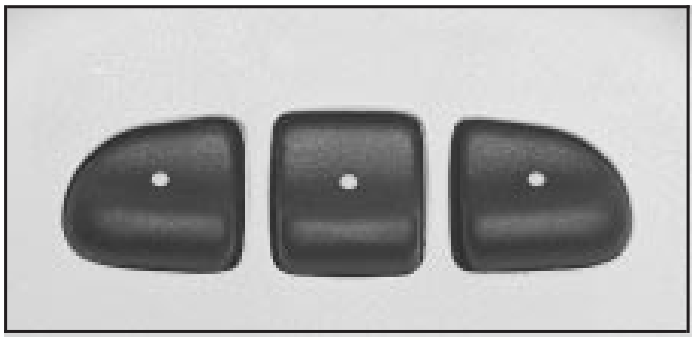

HomeLink, a combined universal transmitter and receiver, provides a way to replace up to three hand–held transmitters used to activate devices such as gate operators, garage door openers, entry door locks, security systems and home lighting. Additional HomeLink information can be found on the internet at www.homelink.com or by calling 1-800-355-3515.

If your vehicle is equipped with the HomeLink® transmitter, it complies with Part 15 of the FCC Rules. Operation is subject to the following two conditions:

1. This device may not cause harmful interference.
2. This device must accept any interference received, including interference that may cause undesired operation.

Downloaded from www.Manualslib.com manuals search engine

This device complies with RSS-210 of Industry Canada. Operation is subject to the following two conditions:

1. This device may not cause interference.
2. This device must accept any interference received, including interference that may cause undesired operation of the device.

Changes and modifications to this system by other than an authorized service facility could void authorization to use this equipment.

Programming the HomeLink® Transmitter

Do not use the HomeLink® Transmitter with any garage door opener that does not have the “stop and reverse” feature. This includes any garage door opener model manufactured before April 1, 1982. If you have a newer garage door opener with rolling codes, please be sure to follow steps 6 through 8 to complete the programming of your HomeLink® Transmitter.

Read the instructions completely before attempting to program the HomeLink® Transmitter. Because of the steps involved, it may be helpful to have another person available to assist you in programming the transmitter.

Keep the original transmitter for use in other vehicles as well as for future HomeLink® programming. It is also recommended that upon the sale of the vehicle, the programmed HomeLink® buttons should be erased for security purposes. Refer to “Erasing HomeLink® Buttons” or, for assistance, contact HomeLink® on the internet at: www.homelink.com or by calling 1-800-355-3515.

Be sure that people and objects are clear of the garage door or gate operator you are programming. When programming a garage door, it is advised to park outside of the garage.

It is recommended that a new battery be installed in your hand-held transmitter for quicker and more accurate transmission of the radio frequency.

Programming HomeLink®

Your vehicle’s engine should be turned off while programming the transmitter. Follow these steps to program up to three channels:

1. Press and hold down the two outside buttons, releasing only when the indicator light begins to flash, after 20 seconds. Do not hold down the buttons for longer than 30 seconds and do not repeat this step to program a second and/or third transmitter to the remaining two HomeLink® buttons.

Downloaded from www.Manualslib.com manuals search engine

2. Position the end of your hand-held transmitter about 1 to 3 inches (3 to 8 cm) away from the HomeLink® buttons while keeping the indicator light in view.
3. Simultaneously press and hold both the desired button on HomeLink® and the hand-held transmitter button. Do not release the buttons until Step 4 has been completed.

   Some entry gates and garage door openers may require you to substitute Step 3 with the procedure noted in “Gate Operator and Canadian Programming” later in this section.
4. The indicator light will flash slowly at first and then rapidly after HomeLink® successfully receives the frequency signal from the hand-held transmitter. Release both buttons.
5. Press and hold the newly-trained HomeLink® button and observe the indicator light.

   If the indicator light stays on constantly, programming is complete and your device should activate when the HomeLink® button is pressed and released.

   To program the remaining two HomeLink® buttons, begin with Step 2 under “Programming HomeLink®.” Do not repeat Step 1 as this will erase all of the programmed channels.

   If the indicator light blinks rapidly for two seconds and then turns to a constant light, continue with Steps 6 through 8 following to complete the programming of a rolling-code equipped device (most commonly, a garage door opener).
6. Locate in the garage, the garage door opener receiver (motor-head unit). Locate the “Learn” or “Smart” button. This can usually be found where the hanging antenna wire is attached to the motor-head unit.
7. Firmly press and release the “Learn” or “Smart” button. The name and color of the button may vary by manufacturer.

   You will have 30 seconds to start Step 8.
8. Return to the vehicle. Firmly press and hold the programmed HomeLink® button for two seconds, then release. Repeat the press/hold/release sequence a second time, and depending on the brand of the garage door opener (or other rolling code device), repeat this sequence a third time to complete the programming.

   HomeLink® should now activate your rolling-code equipped device.

To program the remaining two HomeLink® buttons, begin with Step 2 of “Programming HomeLink®.” You do not want to repeat Step 1, as this will erase all previous programming.

Downloaded from www.Manualslib.com manuals search engine

Gate Operator and Canadian Programming

Canadian radio-frequency laws require transmitter signals to “time out” or quit after several seconds of transmission. This may not be long enough for HomeLink® to pick up the signal during programming. Similarly, some U.S. gate operators are manufactured to “time out” in the same manner.

If you live in Canada, or you are having difficulty programming a gate operator by using the “Programming HomeLink®” procedures (regardless of where you live), replace Step 3 under “Programming HomeLink®” with the following:

Continue to press and hold the HomeLink® button while you press and release every two seconds (cycle) your hand-held transmitter until the frequency signal has been successfully accepted by HomeLink®. The indicator light will flash slowly at first and then rapidly. Proceed with Step 4 under “Programming HomeLink®” to complete.

Using HomeLink®

Press and hold the appropriate HomeLink® button for at least half of a second. The indicator light will come on while the signal is being transmitted.

Erasing HomeLink® Buttons

To erase programming from the three buttons do the following:

1. Press and hold down the two outside buttons until the indicator light begins to flash, after 20 seconds. Do not hold the two outside buttons for longer than 30 seconds.
2. Release both buttons.

HomeLink® is now in the train (learning) mode and can be programmed at any time beginning with Step 2 under “Programming HomeLink®” shown earlier in this section.

Individual buttons cannot be erased, but they can be reprogrammed. See “Reprogramming a Single HomeLink® Button” following this section.

Reprogramming a Single HomeLink® Button

To program a device to HomeLink® using a HomeLink® button previously trained, follow these steps:

1. Press and hold the desired HomeLink® button. Do not release the button.
2. The indicator light will begin to flash after 20 seconds. While still holding the HomeLink® button, proceed with Step 2 under “Programming HomeLink®” shown earlier in this section.

Downloaded from www.Manualslib.com manuals search engine

Resetting Defaults

To reset HomeLink® to default settings do the following:

1. Hold down the two outside buttons for about 20 seconds until the indicator light begins to flash.
2. Continue to hold both buttons until the HomeLink® indicator light turns off.
3. Release both buttons.

For questions or comments, contact HomeLink® at 1-800-355-3515, or on the internet at www.homelink.com.

Storage Areas

Your vehicle's large carrying capacity can store many items. If you have the extended wheelbase version, you can carry even larger items. You can also use the floor pins that are used to attach the seats, to secure larger loads.

Glove Box

Your vehicle has a glove box below the instrument panel. To open the glove box, lift the latch release.

The glove box door has a detent to prevent the door from lowering too far. Open the glove box until the door is partway open, then pull the door down if you need it fully open. To close the glove box, the door must be pushed up past the detent.

Cupholder(s)

There are cupholders located below the center instrument panel switchbank. The cupholders have a removable liner for larger size cups and for cleaning the cupholders.

To use the cupholders, simply pull out the tray. Keep the tray stowed in when not in use.

Your vehicle also has cupholders on the bottom inboard side of the second row driver's side captain's chairs and the seatbacks have cupholders that can be used when the seatbacks are folded forward.

Downloaded from www.Manualslib.com manuals search engine

Compact Overhead Console

The front overhead console includes two reading lamps, a storage compartment and a switchbank.

Overhead Console

If your vehicle is equipped with an overhead console, it may contain the following:

- Reading lamps. See *Front Reading Lamps on page 3-20* or *Rear Reading Lamps on page 3-20*.
- Switchbank. See *Switchbanks on page 3-21*.
- Storage compartments. See *Storage Areas on page 2-48*.
- Garage door opener compartment. See “Garage Door Opener Compartment” following.
- OnStar® System buttons. See *OnStar® System on page 2-43*.
- Driver Information Center (DIC). See *Driver Information Center (DIC) on page 3-52*.
- HomeLink® Transmitter buttons. See *HomeLink® Transmitter on page 2-44*.

If your vehicle has the HomeLink® transmitter buttons, they will take the place of the garage door opener compartment.

Downloaded from www.Manualslib.com manuals search engine

Garage Door Opener Compartment

You can store your garage door opener in the rear compartment of your overhead console, and operate it from this position. To install your garage door opener, follow these instructions:

1. Open the compartment by pressing the latch forward.
2. Peel the protective backing from the hook and loop fastener and press it firmly to the back of your garage door opener.

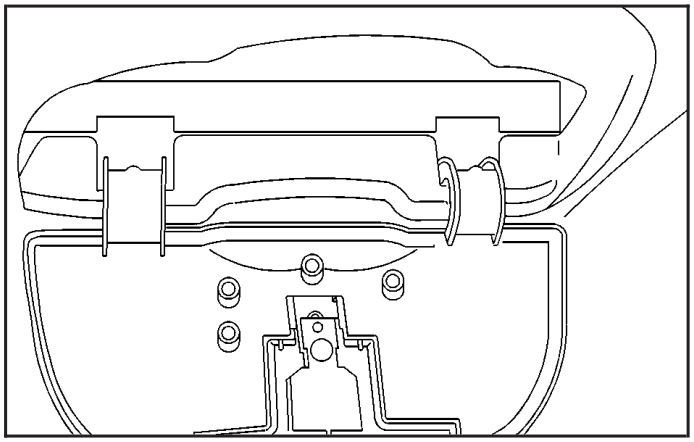

3. Line up the button of the garage door opener with one of the four buttons on the compartment door. Make sure the garage door opener button is facing down and press the opener firmly into place.
4. Once the opener is installed, use the black pegs inside the compartment door to make sure the lined area on the compartment door will contact the control button on your garage door opener when pressed.

Downloaded from www.Manualslib.com manuals search engine

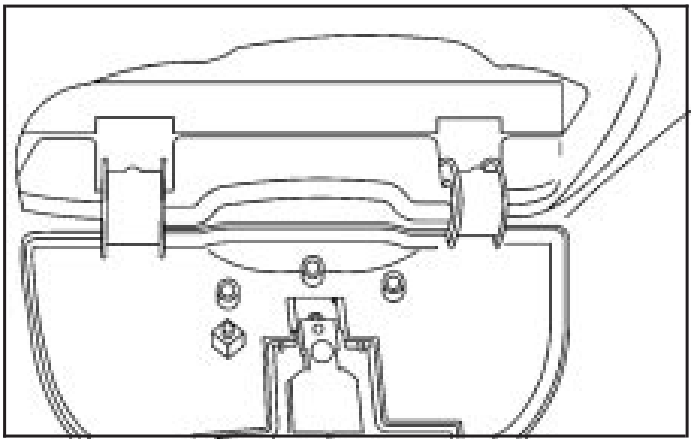

5. Add one peg at a time until your garage door opener operates with the compartment door closed when you press on it.

Front Seat Storage Net

There may be a storage net that stretches between the front seats. Pull the hooks towards the passenger's seat and insert them into the holes.

To store the net, lift the hooks up and out of the holes. The net does not detach from the driver's seat.

When not in use, it is recommended that you unhook the net to extend its life and retain its elasticity.

Downloaded from www.Manualslib.com manuals search engine

Luggage Carrier

⚠ CAUTION:

If you try to carry something on top of your vehicle that is longer or wider than the luggage carrier — like paneling, plywood, a mattress and so forth — the wind can catch it as you drive along. This can cause you to lose control. What you are carrying could be violently torn off, and this could cause you or other drivers to have a collision, and of course damage your vehicle. You may be able to carry something like this inside. But, never carry something longer or wider than the luggage carrier on top of your vehicle.

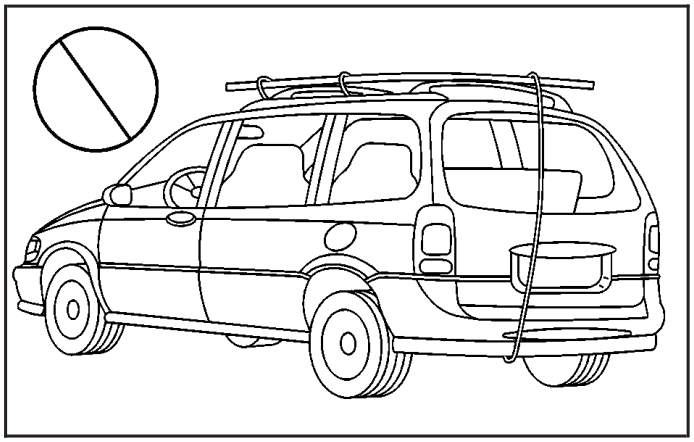

If you have the luggage carrier, you can load things on top of your vehicle.

Downloaded from www.Manualslib.com manuals search engine

Notice: **Loading cargo on the luggage carrier that weighs more than 150 lbs (68 kg) or hangs over the rear or sides of the vehicle may damage your vehicle. Load cargo so that it rests on the slats as far forward as possible and against the side rails, making sure to fasten it securely.**

When you carry cargo on the luggage carrier of a proper size and weight, put it on the slats, as far forward as you can. You can then tie it down.

Don't exceed the maximum vehicle capacity when loading your vehicle. For more information on vehicle capacity and loading, see *Loading Your Vehicle on page 4-29*.

To prevent damage or loss of cargo as you're driving, check now and then to make sure the cargo is still securely fastened.

Rear Storage Area

Your vehicle has a storage compartment and may have a cupholder on the driver's side of the vehicle, next to the third row seat(s).

Convenience Net

Your vehicle may have a convenience net. The convenience net is designed to help keep small loads, like grocery bags, from falling over. Install the convenience net at the rear of your vehicle, inside the liftgate.

To use the convenience net, do the following:

1. Attach the upper loops to the posts on both sides of the liftgate opening. The label on the net should be in the upper left corner.

Downloaded from www.Manualslib.com manuals search engine

2. Attach the lower hooks to the metal rings on the floor.
3. Once you've loaded items into the net, stretch the higher side of the net up and over the top of the load to hold it firmly in place.

The convenience net has a maximum capacity of 100 lbs (45 kg). It is not designed to hold larger, heavier loads. Store such loads on the floor of your vehicle, as far forward as you can.

When not in use, it is recommended that you take down the convenience net to extend the life of the net and to help retain its elasticity, and to keep the rear exit clear.

Convenience Center

⚠ CAUTION:

If any removable convenience item is not secured properly, it can move around in a collision or sudden stop. People in the vehicle could be injured. Be sure to secure any such item properly.

Your vehicle may have a convenience center.

To open, pull up on the door latch located in the front of the convenience center. The cover has two automatic prop rods to hold it up and in place.

To close the convenience center cover, you must pull one of the prop rod linkages toward you while holding onto the door latch.

Downloaded from www.Manualslib.com manuals search engine

Removing the Convenience Center

1. Make sure that all items are off the convenience center and that it is empty.

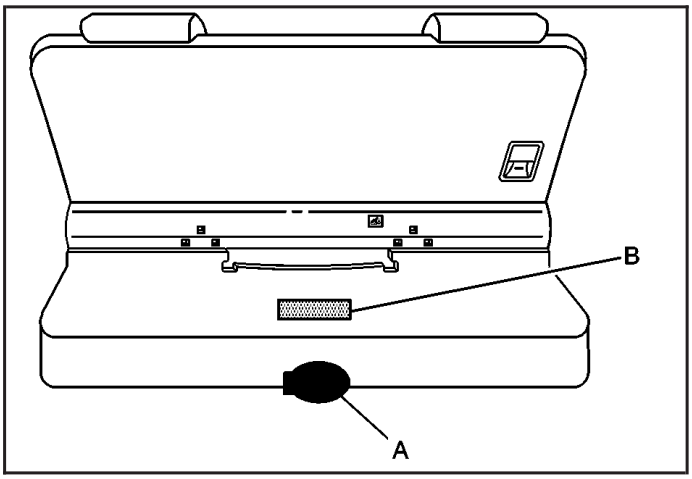

2. There is a knob (A) for the convenience center at rear of the vehicle near the handle (B) for the convenience center. Turn the knob counterclockwise until the knob is loose.
3. Lift up on the knob, then grip the convenience center to lift it up.
4. Pull the convenience center toward you to pull it out.

Replacing the Convenience Center

1. Make sure the stowable seat is properly installed in the vehicle. See *Stowable Seat on page 1-26* for more information. If the stowable seat is not in the vehicle with the convenience center, the convenience center will not be locked into the correct position in the vehicle.
2. Make sure that the convenience center is closed.
3. Lift the convenience center up and into the rear of the vehicle.

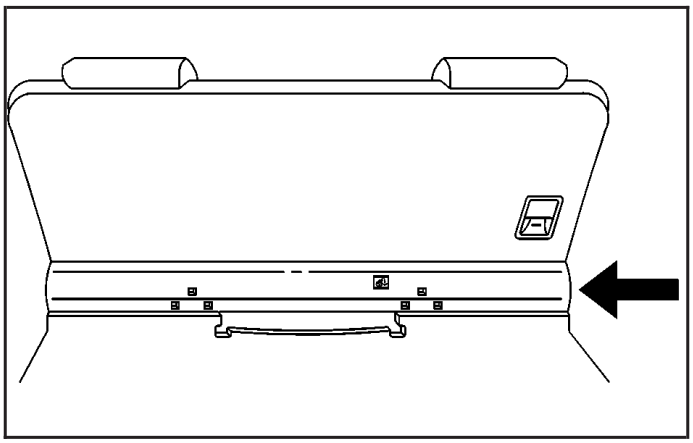

4. Put the tray sill, located on the back of the convenience center, in the upright position.

Downloaded from www.Manualslib.com manuals search engine

5. Slide the convenience center in and align it so that the forks, located on the bottom rear of the convenience center, slide into the seat anchors.
6. Press down on the front of the convenience center so the center locates on the sill mounting bracket.
7. Turn the knob clockwise until it is tight.
8. Pull up on the convenience center to make sure it is locked into place.

The tray sill can be folded down onto the stowable seat to close the space between the two while the stowable seat is folded down. To do this, flip the sill plate up and over toward the stowable seat.

The cover of the convenience center can be left in its upright position while the vehicle is moving.

The convenience center has six hooks on the inside cover for hanging item on. The prop rods can hold-up to 49 lbs (21.8 kg) on the cover of the convenience center while in its upright position.

The convenience center and the stowable seat both have a maximum weight capacity of 400 lbs (181.6 kg).

Notice: **Overloading your vehicle may cause damage. Repairs would not be covered by your warranty. Do not overload your vehicle.**

Downloaded from www.Manualslib.com manuals search engine

Vehicle Personalization

Your vehicle's locks and lighting systems can be programmed with several different features. The features you can program depend on the options that came with your vehicle. The following chart shows the features that can be programmed. To determine which features your vehicle is equipped with, follow the steps listed for entering the programming mode.

	Feature						
Number of chimes sounded	**Delayed Illumination/ Exit Lighting**	**Automatic Door Locks**	**Last Door Closed Locking/ Lockout Deterrent**	**Remote Driver's Door Unlock Control**	**Remote Lock/Unlock Confirmation**	**Content Theft**	**Content Theft Arming/ Disarming**
2	X	X	X	—	—	—	—
3	X	X	X	X	—	—	—
4	X	X	X	X	X	X	X

Downloaded from www.Manualslib.com manuals search engine

Entering Programming Mode

To program features, your vehicle must be in the programming mode. Follow these steps:

1. The content theft-deterrent system must be disarmed. See *Content Theft-Deterrent on page 2-26*.
2. Remove the BCM PRGRM fuse from the instrument panel fuse block, located to the right of the glove box. See *Fuses and Circuit Breakers on page 5-93*.
3. Close the driver's door.
4. Turn the ignition key to ACCESSORY.
5. Count the number of chimes you hear. You will hear two to four chimes depending on the features your vehicle is equipped with. Refer to the chart shown previously.

You can now program your choices.

To exit the programming mode, follow the steps listed under *Exiting Programming Mode on page 2-66*.

Delayed Illumination and Exit Lighting

This feature allows you to customize the interior lamps when entering and exiting the vehicle.

Programmable Modes

Mode 1: Both Features Off. The interior lamps will turn on or off at the same instant that a door is opened or closed.

Mode 2: Delayed Illumination Only. The interior lamps will stay on for about 25 seconds after all the doors and liftgate are closed, or until you lock the doors.

Mode 3: Exit Lighting Only. The interior lamps will come on whenever you remove the key from the ignition and stay on for about 25 seconds, or until you lock the doors.

Mode 4: Both Features On. This combines Modes 2 and 3.

Downloaded from www.Manualslib.com manuals search engine

Your vehicle was originally programmed to Mode 4. The mode may have been changed since then. To determine the current mode, or to change the mode, do the following:

1. Follow the instructions for “Entering Programming Mode” earlier in this section.
2. Turn the interior lamps on by turning the instrument panel brightness control all the way up.
3. Count the number of chimes you hear. The number of chimes indicates the vehicle’s current programmed mode. If you do not wish to change the current mode, you can either exit the programming mode by following the instructions later in this section or program the next feature available on your vehicle.
4. Turn the interior lamps off to change the current mode.
5. Turn the interior lamps from on to off until you hear the number of chimes corresponding to the mode selection you want.

The mode you selected is now set. You can either exit the programming mode by following the instructions later in this section or program the next feature available on your vehicle.

Automatic Door Locks

This feature allows you to customize the automatic locking and unlocking of the doors when using the shift lever.

Programmable Modes

Mode 1: Both Features Off. Automatic door locking and unlocking is disabled. You will always need to lock your doors manually before driving to increase occupant safety.

Mode 2: Automatic Door Locking Only

- The automatic door unlock feature is turned off.
- Shift out of PARK (P) with the ignition on and the driver’s door closed; all doors will lock automatically.

Mode 3: Automatic Unlocking with the Ignition Off

- Turn off the ignition with the transaxle in PARK (P); all doors will unlock automatically.
- Shift out of PARK (P) with the ignition on and the driver’s door closed; all doors will lock automatically.

Downloaded from www.Manualslib.com manuals search engine

Mode 4: Automatic Unlocking with Transaxle in PARK (P)

- Shift into PARK (P) with the ignition on; all doors will unlock automatically.
- Shift out of PARK (P) with the ignition on and the driver's door closed; all doors will lock automatically.

Your vehicle was originally programmed to Mode 3. The mode may have been changed since then. To determine the current mode, or to change the mode, do the following:

1. Follow the instructions for *Entering Programming Mode on page 2-58*.
2. Press LOCK on the power door lock switch.
3. Count the number of chimes you hear. The number of chimes indicates the vehicle's current programmed mode. If you do not wish to change the current mode, you can either exit the programming mode by following the instructions later in this section or program the next feature available on your vehicle.
4. Press LOCK to change the current mode.
5. Press LOCK until you hear the number of chimes corresponding to the mode selection you want.

The mode you selected is now set. You can either exit the programming mode by following the instructions later in this section or program the next feature available on your vehicle.

Last Door Locking and Lockout Deterrent

This feature allows you to customize the automatic locking of the doors when exiting the vehicle.

Programmable Modes

Mode 1: Both Features Off. Doors will always lock immediately when you press LOCK on the power door lock switch or the remote keyless entry transmitter.

Mode 2: Lockout Deterrent Only. If you leave your key in the ignition with the driver's door open, you will not be able to lock the doors with the power door locks.

Mode 3: Last Door Closed Locking Only. If the power door lock switch or the remote keyless entry transmitter is used to lock the vehicle while any door or the liftgate is open, you will hear three chimes. The doors will not lock. Five seconds after the last door is closed, all doors and the liftgate will lock.

Mode 4: Both Features On. This combines Modes 2 and 3.

Downloaded from www.Manualslib.com manuals search engine

Your vehicle was originally programmed to Mode 4. The mode may have been changed since then. To determine the current mode, or to change the mode, do the following:

1. Follow the instructions for *Entering Programming Mode on page 2-58*.
2. Press UNLOCK on the power door lock switch.
3. Count the number of chimes you hear. The number of chimes indicates the vehicle's current programmed mode. If you do not wish to change the current mode, you can either exit the programming mode by following the instructions later in this section or program the next feature available on your vehicle.
4. Press UNLOCK to change the current mode.
5. Press UNLOCK until you hear the number of chimes corresponding to the mode selection you want.

The mode you selected is now set. You can either exit the programming mode by following the instructions later in this section or program the next feature available on your vehicle.

Remote Driver Unlock Control

This feature allows you to customize the UNLOCK button on the remote keyless entry transmitter.

Programmable Modes

Mode 1: Remote All Doors Unlock. When you press UNLOCK on your remote keyless entry transmitter, all doors and the liftgate will unlock.

Mode 2: Remote Driver's Door Unlock Only. When you press UNLOCK on your remote keyless entry transmitter once, the driver's door will unlock. When you press UNLOCK on your remote keyless entry transmitter again within five seconds, all doors and the liftgate will unlock.

Your vehicle was originally programmed to Mode 2. The mode may have been changed since then. To determine the current mode, or to change the mode, do the following:

1. Follow the instructions for *Entering Programming Mode on page 2-58*.
2. Press UNLOCK on the remote keyless entry transmitter.

Downloaded from www.Manualslib.com manuals search engine

3. Count the number of chimes you hear. The number of chimes indicates the vehicle's current programmed mode. If you do not wish to change the current mode, you can either exit the programming mode by following the instructions later in this section or program the next feature available on your vehicle.
4. Press UNLOCK to change the current mode.
5. Press UNLOCK until you hear the number of chimes corresponding to the mode selection you want.

The mode you selected is now set. You can either exit the programming mode by following the instructions later in this section or program the next feature available on your vehicle.

Remote Lock and Unlock Confirmation

If your vehicle has this feature, it allows you to customize the feedback received when locking or unlocking your vehicle with the remote keyless entry transmitter.

Programmable Modes

Mode 1: Both Features Off. Remote lock and unlock confirmation are disabled.

Mode 2: Exterior Lamps Flash Only

- When you use the remote keyless entry transmitter to lock your vehicle, your parking lamps will flash to let you know the command has been received.
- When you use the remote keyless entry transmitter to unlock your vehicle or operate your optional power sliding door(s), your parking lamps will flash to let you know the command has been received.

Mode 3: Exterior Lamps Flash and Horn Sounds

- When you use the remote keyless entry transmitter to lock your vehicle, the horn will sound and your parking lamps will flash to let you know the command has been received.
- When you use the remote keyless entry transmitter to unlock your vehicle or operate your optional power sliding door(s), your parking lamps will flash to let you know the command has been received.

Downloaded from www.Manualslib.com manuals search engine

Mode 4: Exterior Lamps Flash and Horn Sounds on second LOCK press

- When you use the remote keyless entry transmitter to lock your vehicle, your parking lamps will flash to let you know the command has been received. The horn will sound and your parking lamps will flash if you press the LOCK button again within five seconds.
- When you use the remote keyless entry transmitter to unlock your vehicle or operate your optional power sliding door(s), your parking lamps will flash to let you know the command has been received.

Your vehicle was originally programmed to Mode 4. The mode may have been changed since then. To determine the current mode, or to change the mode, do the following:

1. Follow the instructions for *Entering Programming Mode on page 2-58*.
2. Press LOCK on the remote keyless entry transmitter.
3. Count the number of chimes you hear. The number of chimes indicates the vehicle's current programmed mode. If you do not wish to change the current mode, you can either exit the programming mode by following the instructions later in this section or program the next feature available on your vehicle.
4. Press LOCK to change the current mode.
5. Press LOCK until you hear the number of chimes corresponding to the mode selection you want.

The mode you selected is now set. You can either exit the programming mode by following the instructions later in this section or program the next feature available on your vehicle.

Content Theft-Deterrent System

This feature allows you to turn the content theft deterrent on and off.

Programmable Modes

Mode 1, Mode 2 and Mode 4: Feature On. If anyone opens a door or the liftgate while your content theft-deterrent system is armed, an alarm will sound and your parking lamps will flash for up to two minutes.

Mode 3: Feature Off. Your content theft-deterrent system is always disarmed.

Downloaded from www.Manualslib.com manuals search engine

Your vehicle was originally programmed to Mode 4. The mode may have been changed since then. To determine the current mode, or to change the mode, do the following:

1. Follow the instructions for *Entering Programming Mode on page 2-58*.
2. Turn the parking lamps on, then off.
3. Count the number of chimes you hear. The number of chimes indicates the vehicle's current programmed mode. If you do not wish to change the current mode, you can either exit the programming mode by following the instructions later in this section or program the next feature available on your vehicle.
4. Turn the parking lamps on, then off to change the current mode.
5. Turn the parking lamps on, then off until you hear the number of chimes corresponding to the mode selection you want.

The mode you selected is now set. You can either exit the programming mode by following the instructions later in this section or program the next feature available on your vehicle.

Arming and Disarming the Content Theft-Deterrent System

To arm or disarm the content theft-deterrent system, the system must be turned on by using Modes 1, 2, or 4 listed previously.

This feature allows you to customize the arming and disarming of the content-theft deterrent system.

Programmable Modes

Mode 1: Power Door Lock Switch Arming Off

- The system will arm when you lock the doors with your key or remote keyless entry transmitter. The key must be removed from the ignition when you lock the doors or the content theft-deterrent system will not arm.
- The system will disarm when you unlock the doors with your key or remote keyless entry transmitter.

Downloaded from www.Manualslib.com manuals search engine

Mode 2: Remote Keyless Entry Transmitter Arm/Disarm Only

- The system will arm when you lock the doors with your remote keyless entry transmitter. The key must be removed from the ignition when you lock the doors or the content theft-deterrent system will not arm.
- The system will disarm when you unlock the doors with your remote keyless entry transmitter.

While this mode provides increased security, it can be a problem if your remote keyless entry transmitter is damaged, lost, or if it fails to operate for any reason while the content theft-deterrent system is armed. The content theft-deterrent system must be disarmed for the engine to run while in Mode 2; your key can no longer disarm the system.

If your vehicle is equipped with the OnStar® system, OnStar® will not be able to remotely unlock your vehicle if it has been programmed to Mode 2.

Mode 3: Standard Arming and Disarming

- The system will arm when you lock the doors using either power door lock switch while any door or the liftgate is open and the key is removed from the ignition.
- The system will arm when you lock the doors with your key or remote keyless entry transmitter and the key is removed from the ignition.
- The system will disarm when you unlock the doors with your key or remote keyless entry transmitter.

Your vehicle was originally programmed to Mode 1. The mode may have been changed since then. To determine the current mode, or to change the mode, do the following:

1. Follow the instructions for *Entering Programming Mode on page 2-58*.
2. Insert your spare key fully into any door key cylinder and turn it to the unlock position.

   This step is necessary to prevent accidental programming of this feature to Mode 2. Do not program this feature to Mode 2 without first reading Mode 2 entirely. The door key cylinder must remain in the unlock position during Steps 2 through 4.

Downloaded from www.Manualslib.com manuals search engine

3. Press the button with the horn symbol on the remote keyless entry transmitter.
4. Count the number of chimes you hear. The number of chimes indicates the vehicle's current programmed mode. If you do not wish to change the current mode, you can either exit the programming mode by following the instructions later in this section or program the next feature available on your vehicle.
5. Press the panic button to change the current mode.
6. Press the panic button until you hear the number of chimes corresponding to the mode selection you want.
7. Remove your key from the door key cylinder.

The mode you selected is now set. You can either exit the programming mode by following the instructions next in this section or program the next feature available on your vehicle.

Exiting Programming Mode

To exit programming mode, turn the key from ACCESSORY to OFF and put the BCM PRGRM fuse back into the instrument panel fuse block.

After programming a feature, you can exit the programming mode at anytime. Also, if your vehicle is equipped with the content theft-deterrent system, remember to arm the system before exiting.

Downloaded from www.Manualslib.com manuals search engine

Section 3 Instrument Panel

Instrument Panel Overview 3-4
Hazard Warning Flashers 3-6
Other Warning Devices 3-6
Horn 3-6
Tilt Wheel 3-6
Turn Signal/Multifunction Lever 3-7
Turn and Lane-Change Signals 3-8
Headlamp High/Low-Beam Changer 3-9
Flash-to-Pass 3-9
Windshield Wipers 3-9
Windshield Washer 3-10
Cruise Control 3-12
Exterior Lamps 3-15
Daytime Running Lamps/Automatic Headlamp System 3-16
Fog Lamps 3-17
Instrument Panel Brightness 3-17
Interior Lamps Control 3-17
Interior Lamp Override 3-18
Dome Lamp 3-18
Entry Lighting 3-18
Delayed Lighting 3-19
Exit Lighting 3-19
Front Reading Lamps 3-20
Rear Reading Lamps 3-20
Cargo Lamp 3-20
Battery Run-Down Protection 3-21
Switchbanks 3-21
Instrument Panel Switchbank 3-21
Overhead Console Switchbank 3-22
Ultrasonic Rear Parking Assist (URPA) 3-22
Accessory Power Outlets 3-25
Climate Controls 3-26
Climate Control System 3-26
Outlet Adjustment 3-28
Rear Climate Control System (Without Entertainment System) 3-29
Rear Climate Control System (With Entertainment System) 3-31
Passenger Compartment Air Filter 3-32

Downloaded from www.Manualslib.com manuals search engine

Section 3 Instrument Panel

Warning Lights, Gages, and Indicators 3-34
Instrument Panel Cluster 3-35
Speedometer and Odometer 3-36
Dual Trip Odometers 3-36
Tachometer 3-37
Safety Belt Reminder Light 3-38
Airbag Readiness Light 3-38
Brake System Warning Light 3-39
Anti-Lock Brake System Warning Light 3-40
Traction Control System (TCS)
Warning Light 3-40
Engine Coolant Temperature Gage 3-41
Malfunction Indicator Lamp 3-41
Highbeam On Light 3-44
Fuel Gage 3-45

Message Center 3-45
Service Traction System Warning Message 3-46
Traction Active Message 3-46
Engine Coolant Temperature
Warning Message 3-47
Charging System Indicator Message 3-47
Low Oil Pressure Message 3-48
Change Engine Oil Message 3-49
Power Sliding Door Warning Message 3-49
Door Ajar Warning Message 3-50
Rear Hatch Ajar Warning Message 3-50
PASS-Key® III Security Message 3-51
Low Fuel Warning Message 3-51

Driver Information Center (DIC) 3-52

Audio System(s) 3-55
Setting the Time 3-55
Radio with CD (Base Level) 3-56
Radio with CD (MP3) 3-66
Radio with Cassette and CD 3-80
Radio with Six-Disc CD 3-90
Entertainment System 3-104
Rear Seat Audio (RSA)
(Without Entertainment System) 3-111
Rear Seat Audio (RSA)
(With Entertainment System) 3-113
Theft-Deterrent Feature 3-115
Audio Steering Wheel Controls 3-115
Radio Reception 3-116
Care of Your Cassette Tape Player 3-116
Care of Your CDs and DVDs 3-118
Care of Your CD and DVD Player 3-118
Fixed Mast Antenna 3-118
XM™ Satellite Radio Antenna System 3-118

Downloaded from www.Manualslib.com manuals search engine

✍ NOTES

Downloaded from www.Manualslib.com manuals search engine

Instrument Panel Overview

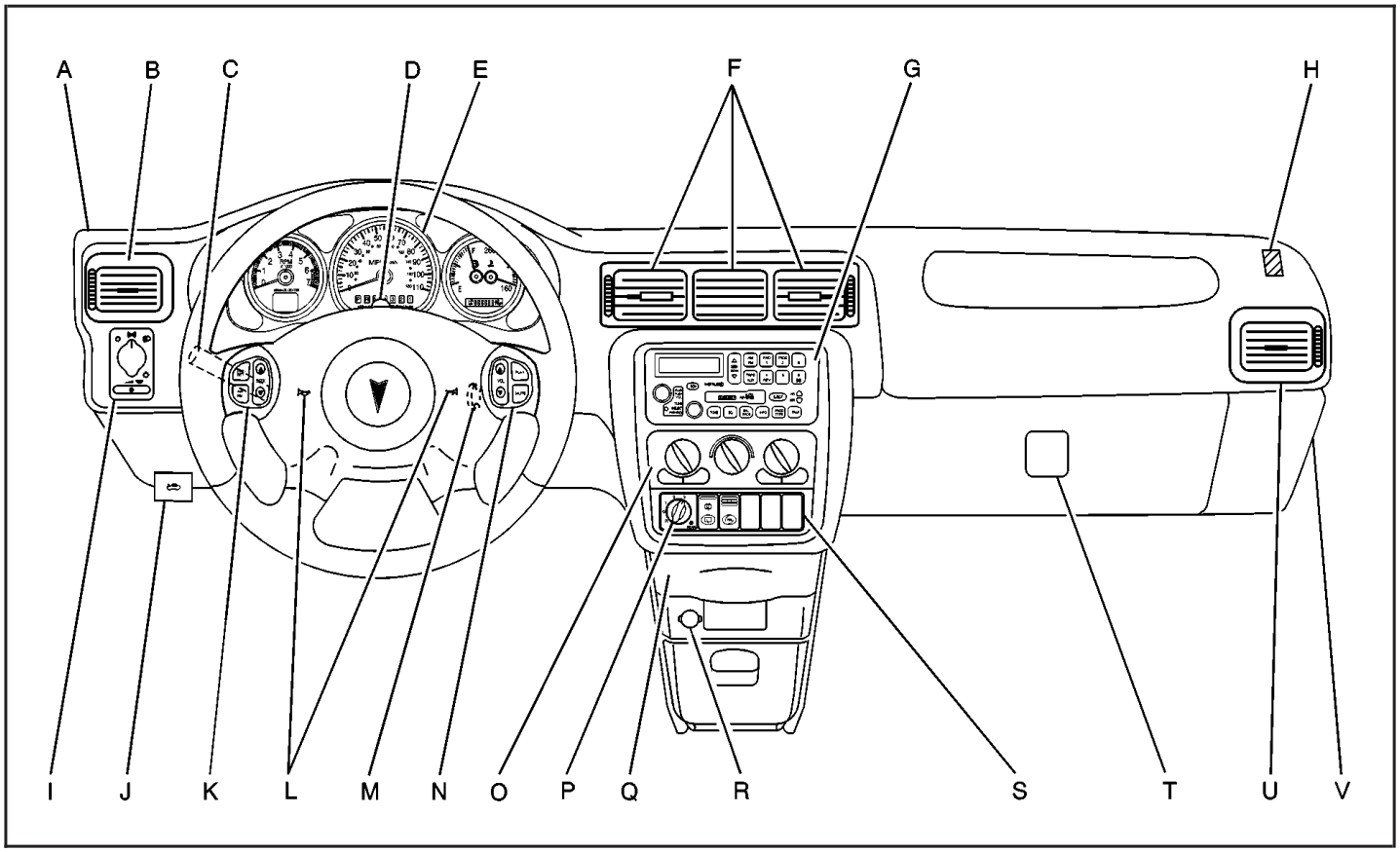

Downloaded from www.Manualslib.com manuals search engine

The main components of the instrument panel are the following:

A. Side Outlets. See *Outlet Adjustment on page 3-28*.
B. Front Outlets. See *Outlet Adjustment on page 3-28*.
C. Turn Signal/Multifunction Lever. See *Turn Signal/Multifunction Lever on page 3-7*.
D. Hazard Warning Flasher Switch. See *Hazard Warning Flashers on page 3-6*.
E. Instrument Panel Cluster. See *Instrument Panel Cluster on page 3-35*.
F. Center Outlets. See *Outlet Adjustment on page 3-28*.
G. Audio System. See *Audio System(s) on page 3-55*.
H. Side Outlets. See *Outlet Adjustment on page 3-28*.
I. Exterior Lamps Control. See *Exterior Lamps on page 3-15*.
J. Hood Release. See *Hood Release on page 5-11*.
K. Audio Steering Wheel Controls. See *Audio Steering Wheel Controls on page 3-115*.
L. Horn. See *Horn on page 3-6*.
M. Ignition Switch. See *Ignition Positions on page 2-30*.
N. Audio Steering Wheel Controls. See *Audio Steering Wheel Controls on page 3-115*.
O. Climate Controls. See *Climate Control System on page 3-26*.
P. Rear Fan Controls. See *Rear Climate Control System (Without Entertainment System) on page 3-29* or *Rear Climate Control System (With Entertainment System) on page 3-31*.
Q. Cupholder Tray. See *Cupholder(s) on page 2-48*.
R. Accessory Power Outlet. See *Accessory Power Outlets on page 3-25*.
S. Instrument Panel Switchbank. See *Instrument Panel Switchbank on page 3-21*.
T. Glove Box. See *Glove Box on page 2-48*.
U. Front Outlets. See *Outlet Adjustment on page 3-28*.
V. Instrument Panel Fuse Block. See *Fuses and Circuit Breakers on page 5-93*.

Downloaded from www.Manualslib.com manuals search engine

Hazard Warning Flashers

Your hazard warning flashers let you warn others. They also let police know you have a problem. Your front and rear turn signal lamps will flash on and off.

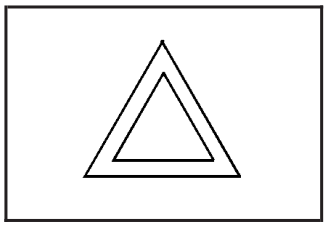

The hazard warning flasher button is located on top of the steering column.

Your hazard warning flashers work no matter what position your key is in, and even if the key is not in.

Press the button to make the front and rear turn signal lamps flash on and off. Press the button again to turn the flashers off.

When the hazard warning flashers are on, your turn signals will not work.

Other Warning Devices

If you carry reflective triangles, you can set them up at the side of the road about 300 feet (100 m) behind your vehicle.

Horn

Press near or on the horn symbols on your steering wheel pad to sound the horn.

Tilt Wheel

A tilt wheel allows you to adjust the steering wheel before you drive. You can raise the steering wheel to the highest level to give your legs more room when you enter and exit the vehicle.

The lever that allows you to tilt the steering wheel is located on the left side of the steering column.

To tilt the wheel, hold the wheel and pull the lever. Then move the wheel to a comfortable position and release the lever to lock the wheel in place.

Downloaded from www.Manualslib.com manuals search engine

Turn Signal/Multifunction Lever

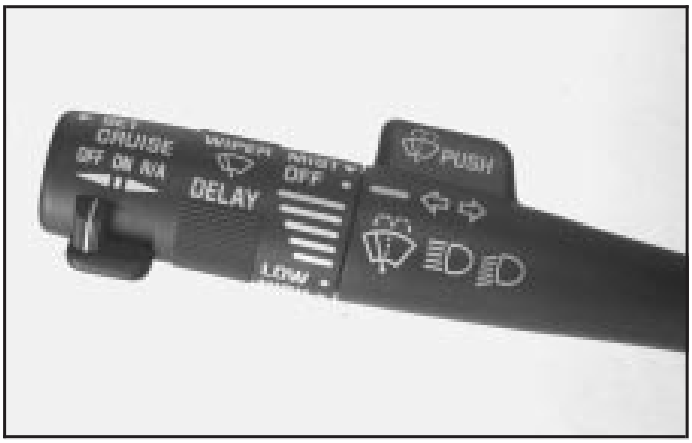

The lever on the left side of the steering column includes the following:

- Turn and Lane-Change Signals. See *Turn and Lane-Change Signals on page 3-8*.
- Headlamp High/Low-Beam Changer. See *Headlamp High/Low-Beam Changer on page 3-9*.
- Flash-to-Pass. See *Flash-to-Pass on page 3-9*.
- Windshield Wipers. See *Windshield Wipers on page 3-9*.
- Windshield Washer. See *Windshield Washer on page 3-10*.
- Cruise Control. See *Cruise Control on page 3-12*.

Downloaded from www.Manualslib.com manuals search engine

Turn and Lane-Change Signals

The turn signal has two upward (for right) and two downward (for left) positions. These positions allow you to signal a turn or a lane change.

To signal a turn, move the lever all the way up or down. When the turn is finished, the lever will return automatically.

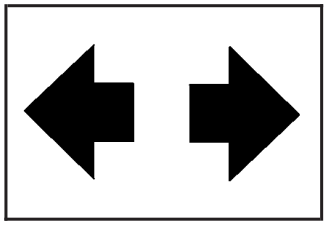

An arrow on the instrument panel cluster will flash in the direction of the turn or lane change.

To signal a lane change, just raise or lower the lever until the arrow starts to flash. Hold it there until you complete your lane change. The lever will return by itself when you release it.

As you signal a turn or a lane change, if the arrow flashes faster than normal, a signal bulb may be burned out and other drivers will not see your turn signal.

If a bulb is burned out, replace it to help avoid an accident. If the arrows do not go on at all when you signal a turn, check for burned-out bulbs and check the fuse. See *Bulb Replacement on page 5-44* and *Fuses and Circuit Breakers on page 5-93*.

If you have a trailer towing option with added wiring for the trailer lamps, the signal indicator will flash at a normal rate even if a turn signal bulb is burned out. Check the front and rear turn signal lamps regularly to make sure they are working.

Turn Signal On Chime

If either turn signal is left on for more than 3/4 mile (1.2 km), a chime will sound to let the driver know to turn it off. If you need to leave the signal on for more than 3/4 mile (1.2 km), turn off the signal and then turn it back on.

Downloaded from www.Manualslib.com manuals search engine

Headlamp High/Low-Beam Changer

To change the headlamps from high to low beam or from low to high, pull the turn signal lever all the way toward you and release it.

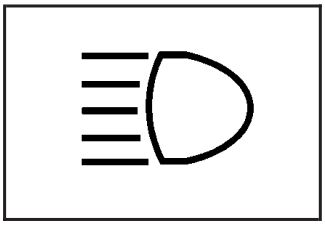

When the high beams are on, this light on the instrument panel cluster will also be on.

Your fog lamps will turn off when you switch to high beams. Using your high beams in fog is not recommended.

Flash-to-Pass

When the headlamps are off, pull the lever toward you to momentarily turn on the high beams. This will signal that you are going to pass. When you release the lever, they will turn off.

Windshield Wipers

WIPER: Turn this band to operate the windshield wipers.

MIST: Turn the band to MIST for a single wiping cycle. Hold it there until the wipers start. Then let go. The wipers will stop after one wipe. If you want more wipes, hold the band on mist longer.

OFF: Turn the band to OFF to turn off the windshield wipers.

LOW: Turn the band to LOW, for steady wiping at low speed.

HIGH: Turn the band to HIGH, for steady wiping at high speed.

Downloaded from www.Manualslib.com manuals search engine

DELAY: Turn the band away from you to one of the five sensitivity settings between OFF and LOW, to choose the delayed wiping cycle. The further the band is turned toward LOW, the shorter the delay will be. Use this setting for light rain or snow.

Remember that damaged wiper blades may prevent you from seeing well enough to drive safely. To avoid damage, clear ice and snow from the wiper blades before using them. If they are frozen to the windshield, carefully loosen or thaw them. If your blades do become damaged, get new blades or blade inserts.

Heavy snow or ice can overload your wipers. A circuit breaker will stop them until the motor cools. Clear away snow or ice to prevent an overload.

Windshield Washer

(Windshield Washer): Press and hold the windshield washer paddle with this symbol on it to wash your windshield. The washers and wipers will operate.

When you release the paddle, the washers will stop, and the wipers will continue to operate for two cycles, unless your wipers had already been on. In that case, the wipers will resume the wiper speed you had selected earlier.

⚠ CAUTION:

In freezing weather, do not use your washer until the windshield is warmed. Otherwise the washer fluid can form ice on the windshield, blocking your vision.

Downloaded from www.Manualslib.com manuals search engine

Rear Window Washer/Wiper

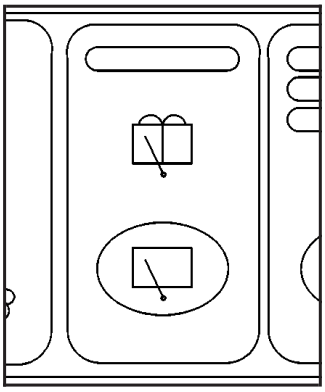

If your vehicle has a rear window wiper, the switch is located in the instrument panel switchbank.

Press the wiper symbol on the bottom of the switch to turn on the intermittent wiper. To turn off the wiper, press the top of the switch.

To wash and wipe the rear window, press the washer symbol on the top of the switch. Washer fluid will run down the glass as long as the switch is held in. When the top of the switch is released, the wiper will continue to cycle three more times. There is only one washer fluid reservoir for the front and rear windshield wipers. See *Windshield Washer Fluid on page 5-34*.

To wash the rear window when the rear wiper is already on, press the top of the switch with the wash symbol on it. Press in the bottom of the switch to continue the intermittent wiper cycle after the washing cycle is completed.

Downloaded from www.Manualslib.com manuals search engine

Cruise Control

Your vehicle may have cruise control. With cruise control, you can maintain a speed of about 25 mph (40 km/h) or more without keeping your foot on the accelerator. This can really help on long trips.

Cruise control does not work at speeds below about 25 mph (40 km/h).

When you apply your brakes, the cruise control disengages.

⚠ CAUTION:

Cruise control can be dangerous where you cannot drive safely at a steady speed. So, do not use your cruise control on winding roads or in heavy traffic.

Cruise control can be dangerous on slippery roads. On such roads, fast changes in tire traction can cause needless wheel spinning, and you could lose control. Do not use cruise control on slippery roads.

If your vehicle is in cruise control when the optional traction control system begins to limit wheel spin, the cruise control will automatically disengage. See *Traction Control System (TCS) on page 4-8*. When road conditions allow you to safely use it again, you may turn the cruise control back on.

Setting Cruise Control

⚠ CAUTION:

If you leave your cruise control on when you are not using cruise, you might hit a button and go into cruise when you do not want to. You could be startled and even lose control. Keep the cruise control switch off until you want to use cruise control.

1. Move the cruise control switch to ON.
2. Get up to the speed you want.

Downloaded from www.Manualslib.com manuals search engine

3. Press the SET button at the end of the lever and release it.
4. Take your foot off the accelerator pedal.

Resuming a Set Speed

Suppose you set your cruise control at a desired speed and then you apply the brake. This, of course, shuts off the cruise control. But you do not need to reset it. Once you are going about 25 mph (40 km/h) or more, you can move the cruise control switch from ON to resume/accelerate (R/A) briefly. You will go back up to your chosen speed and stay there.

If you hold the switch at R/A, the vehicle will keep going faster until you release the switch or apply the brake. So unless you want to go faster, do not hold the switch at R/A.

Increasing Speed While Using Cruise Control

To increase your speed while using cruise control, do one of the following:

- Use the accelerator pedal to get to the higher speed. Press the SET button at the end of the lever, then release the button and the accelerator pedal. You will begin to cruise at the higher speed.
- Move the cruise switch from ON to R/A. Hold it there until you get up to the speed you want, and then release the switch. To increase your speed in very small amounts, move the switch to R/A briefly and then release it. Each time you do this, your vehicle will go about 1 mph (1.6 km/h) faster.

The accelerate feature will work whether or not you have set an initial cruise control speed.

Downloaded from www.Manualslib.com manuals search engine

Reducing Speed While Using Cruise Control

To reduce your speed while using cruise control, do one of the following:

- Press the SET button at the end of the lever until you reach the lower speed you want, then release it.
- To slow down in very small amounts, press the SET button briefly. Each time you do this, you will go about 1 mph (1.6 km/h) slower.

Passing Another Vehicle While Using Cruise Control

To pass another vehicle while using cruise control, use the accelerator pedal to increase your speed. When you take your foot off the pedal, your vehicle will slow down to the cruise control speed you set earlier.

Using Cruise Control on Hills

How well your cruise control will work on hills depends upon your speed, load and the steepness of the hills. When going up steep hills, you may have to step on the accelerator pedal to maintain your speed. When going downhill, you may have to brake or shift to a lower gear to keep your speed down. Of course, applying the brake takes you out of cruise control. Many drivers find this to be too much trouble and do not use cruise control on steep hills.

Ending Cruise Control

To turn off the cruise control, do one of the following:

- Step lightly on the brake pedal.
- Move the cruise switch to OFF.

Erasing Speed Memory

When you turn off the cruise control or the ignition, your cruise control set speed memory is erased.

Downloaded from www.Manualslib.com manuals search engine

Exterior Lamps

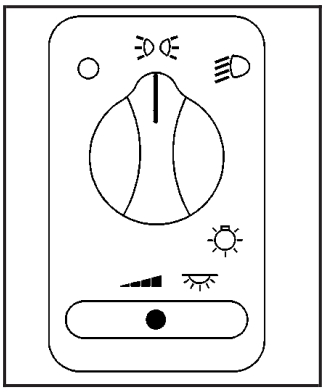

The control to the left of the steering column operates the exterior lamps.

(Off/Auto): Turning the control to this setting will activate the automatic headlamps when it is dark enough outside and turn off all the lamps and lights during the day except the Daytime Running Lamps (DRL).

(Parking Lamps): Turning the control to this setting turns on the parking lamps together with the following:

- Sidemarker Lamps
- Taillamps
- Instrument Panel Lights

(Headlamps): Turning the control to this setting turns on the headlamps, together with the previously listed lamps and lights.

Lamps on Reminder

If the driver's door is opened and you turn the ignition to OFF or LOCK while leaving the lamps on, you will hear a warning chime.

Downloaded from www.Manualslib.com manuals search engine

Daytime Running Lamps/Automatic Headlamp System

Daytime Running Lamps (DRL) can make it easier for others to see the front of your vehicle during the day. DRL can be helpful in many different driving conditions, but they can be especially helpful in the short periods after dawn and before sunset. Fully functional daytime running lamps are required on all vehicles first sold in Canada.

A light sensor on top of the instrument panel makes the DRL work, so be sure it is not covered. The DRL system will make front parking and turn signal lamps come on in daylight when the following conditions are met:

- The ignition is on.
- The exterior lamps control is off.
- The parking brake is released.

When the DRL are on, only your front parking and turn signal lamps will be on. Your instrument panel will not be lit up.

When it is dark enough outside, the exterior lamps will come on automatically. When it is bright enough outside, the exterior lamps will turn off and the DRL will turn on. Of course, you may still turn on the headlamps any time you need to.

If you start your vehicle in a dark garage, the automatic headlamp system will come on immediately. Once you leave the garage, it will take approximately one minute for the automatic headlamp system to change to DRL if it is light outside. During that delay, your instrument panel cluster may not be as bright as usual. Make sure your instrument panel brightness control is in the full bright position. See *Instrument Panel Brightness on page 3-17*.

To idle your vehicle with the DRL and automatic headlamps off, set the parking brake while the ignition is in OFF or LOCK. Then start the vehicle. The DRL and automatic headlamps will stay off until you release the parking brake.

As with any vehicle, you should turn on the regular headlamp system when you need it.

Downloaded from www.Manualslib.com manuals search engine

Fog Lamps

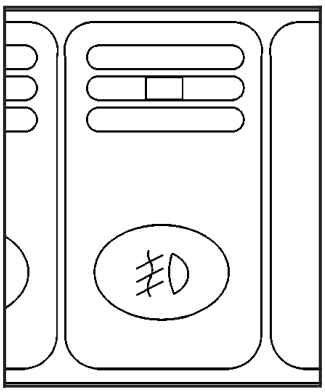

Your vehicle may have fog lamps. If it does, the fog lamps switch is located in the instrument panel switchbank. Press the fog lamp symbol on the switch to turn on the lamps.

The indicator light will be lit while the fog lamps are on. Press the top part of the switch to turn them off.

When your DRL are on, the exterior lamps control must first be turned from the off position before the fog lamps can be turned on.

Your parking lamps or headlamps must be on for your fog lamps to turn on.

At night, when the light sensor automatically turns on your headlamps, the fog lamps can be turned on while the exterior lamps control is in any position.

Your fog lamps will go off when you switch to high beams. Using your high beams in fog is not recommended.

Instrument Panel Brightness

The thumbwheel for this feature is located below the exterior lamps control. Turn the thumbwheel to the right to brighten the lights, or to the left to dim them.

Interior Lamps Control

Turn the thumbwheel all the way to the right to turn on the interior lamps, if the interior lamps override switch is off. Turn the thumbwheel to the left to turn the lamps off.

Downloaded from www.Manualslib.com manuals search engine

Interior Lamp Override

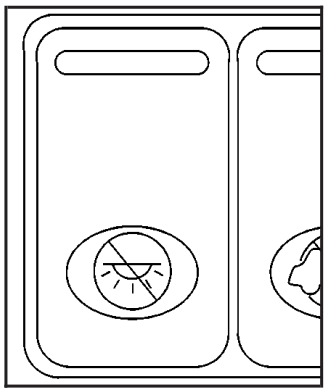

This switch is located in the overhead console switchbank. Press the bottom of the switch to keep the interior lamps off while any door is open, or the top of the switch to allow the interior lamps to come on while any door is open.

Dome Lamp

The dome lamp is located in the headliner and has two buttons to manually turn it on or off. The dome lamp will come on each time you open a door, unless you turn on the interior lamps override feature. See *Interior Lamp Override on page 3-18*.

Entry Lighting

With entry lighting, the interior of your vehicle is illuminated so that you can see inside before you enter your vehicle. The lamps will come on for 40 seconds if you unlock your door using your key or the remote keyless entry transmitter and the ignition is in LOCK or OFF. After 40 seconds have passed, the interior lamps will slowly fade out. The lamps will turn off before the 40 seconds if you do one of the following:

- Lock all the doors using the key.
- Press LOCK on the power door lock switch.
- Press LOCK on the remote keyless entry transmitter.

When any door is opened, entry lighting is cancelled. The interior lamps will stay on while any door or the liftgate is open, and slowly fade out when all doors and the liftgate are closed.

The interior lamps may stay on for up to 25 seconds after all doors have been closed if they have not been locked. See *Delayed Lighting on page 3-19*.

To turn the entry lighting feature off or on, see *Vehicle Personalization on page 2-57*.

Downloaded from www.Manualslib.com manuals search engine

Delayed Lighting

The delayed lighting feature will continue to illuminate the interior for 25 seconds after all doors have been closed, so that you can find your ignition and buckle your safety belt at night. Delayed lighting will not occur while the ignition is in RUN or ACCESSORY. After 25 seconds have passed, the interior lamps will slowly fade out. The lamps will fade out before the 25 seconds have passed if you do one of the following:

- Turn the ignition to RUN or ACCESSORY.
- Lock all doors using the remote keyless entry transmitter.
- Lock all doors using the power door lock switch or the key.

To turn the delayed lighting feature off or on, see *Vehicle Personalization on page 2-57*.

Exit Lighting

With exit lighting, the interior lamps will come on for about 25 seconds whenever you remove the key from the ignition. If you turn the ignition key to RUN or ACCESSORY, the lamps will fade out. The lamps will also fade out if you lock the doors with the power door lock switch or the remote keyless entry transmitter.

When any door is opened, exit lighting is cancelled. The interior lamps will stay on while any door or the liftgate is open, and slowly fade out when all doors and the liftgate are closed.

The interior lamps may stay on for up to 25 seconds after all doors have been closed if they have not been locked. See *Delayed Lighting on page 3-19*.

To turn the exit lighting feature off or on, see *Vehicle Personalization on page 2-57*.

Downloaded from www.Manualslib.com manuals search engine

Front Reading Lamps

There are two reading lamps in the overhead console. To turn either reading lamp on or off, press the lens of the lamp. These lamps will come on each time you open a door, unless you turn on the interior lamps override feature. See *Interior Lamp Override on page 3-18*.

Rear Reading Lamps

There may be two reading lamps in the third row headliner. To turn either reading lamp on or off, press the lens of the lamp.

There is also a reading lamp in the second row, integrated with the dome lamp. To turn the second row reading lamp on or off, press the button next to the lamp lens.

Rear reading lamps will not turn on if the interior lamps override switch is on. See *Interior Lamp Override on page 3-18*.

Cargo Lamp

The cargo lamp is located in the rear of your vehicle, above the liftgate opening, and does not have a switch. The cargo lamp will come on each time you open a door, unless you turn on the interior lamps override. See *Interior Lamp Override on page 3-18*.

Downloaded from www.Manualslib.com manuals search engine

Battery Run-Down Protection

Your vehicle has a feature to help prevent you from draining the battery, in case you accidentally leave the interior lamps on. If you leave any interior lamps on while the ignition is in LOCK or OFF, they will automatically turn off after 10 minutes. The lamps will not come back on again until you do one of the following:

- Turn the ignition to RUN or ACCESSORY.
- Turn the interior lamps thumbwheel all the way to the right, then slightly back to the left.
- Open a closed door, or close and reopen a door.

If your vehicle has less than 15 miles (25 km) on the odometer, the battery saver will turn off the lamps after only three minutes.

Switchbanks

There are two sets of switchbanks located in the front of the vehicle. The switches will vary with the options that are on your vehicle.

Instrument Panel Switchbank

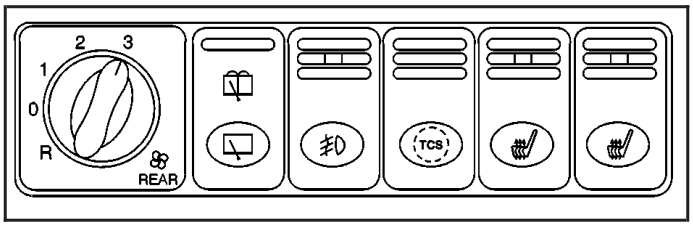

The instrument panel switchbank is located in the instrument panel below the comfort controls. This switchbank may contain the following:

- Rear Fan Knob. See *Rear Climate Control System (Without Entertainment System) on page 3-29* or *Rear Climate Control System (With Entertainment System) on page 3-31*.
- Rear Window Washer/Wiper Switch. See “Rear Window Washer/Wiper” under *Windshield Washer on page 3-10*.
- Fog Lamps Switch. See *Exterior Lamps on page 3-15*.
- Traction Control Switch. See *Traction Control System (TCS) on page 4-8*.
- Heated Seats Switches. See *Heated Seats on page 1-5*.

If your vehicle does not have one of these options, there will be a blank.

Downloaded from www.Manualslib.com manuals search engine

If your vehicle is not equipped with the optional rear climate control system, there will be a storage space in this switchbank. The rubber mat can be removed for cleaning. Snap the mat into place after cleaning.

Overhead Console Switchbank

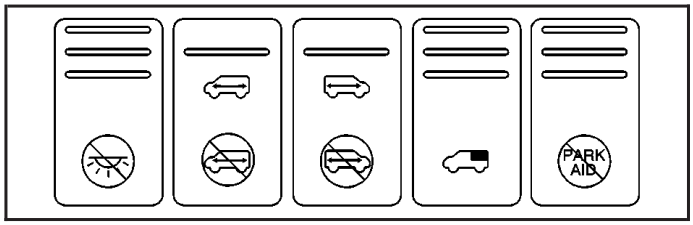

The overhead console switchbank is located in the overhead console. This switchbank may include the following:

- Interior Lamps Override. See *Interior Lamp Override on page 3-18*.
- Power Sliding Door(s)/Override Switch(es). See *Power Sliding Door (PSD) on page 2-16*.
- Power Rear Quarter Windows. See *Power Rear Quarter Windows on page 2-25*.
- Ultrasonic Rear Parking Aid (URPA) Disable Switch. See *Ultrasonic Rear Parking Assist (URPA) on page 3-22*.

If your vehicle does not have some of these options, there will be a blank.

Ultrasonic Rear Parking Assist (URPA)

The Ultrasonic Rear Parking Assist (URPA) system is designed to help you park, while the vehicle is in REVERSE (R). It operates only at very low speeds, less than 3 mph (5 km/h). URPA can help make parking easier and to help you avoid colliding with objects such as parked vehicles. The URPA system can detect objects up to 5 feet (1.5 m) behind the vehicle, and tell you how close these objects are from your rear bumper.

Your vehicle's URPA operates when the shift lever is moved into REVERSE (R) and the vehicle speed is less than 3 mph (5 km/h). Four ultrasonic sensors located at the rear bumper are used to detect the distance to the object. The URPA display is located inside the vehicle, near the rear window. It has three color-coded lights used to provide distance and system information to the driver.

Downloaded from www.Manualslib.com manuals search engine

⚠ CAUTION:

Even with the Ultrasonic Rear Park Assist system, the driver must check carefully before backing up. The system does not operate above typical backing speeds of 3 mph (5 km/h) while parking. And, the system does not detect objects that are more than 5 feet (1.5 meters) behind the vehicle.

So, unless you check carefully behind you before and when you back up, you could strike children, pedestrians, bicyclists or pets behind you, and they could be injured or killed.

Whether or not you are using rear park assist, always check carefully behind your vehicle before you back up and then watch closely as you do.

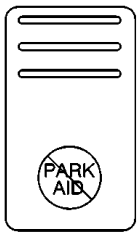

URPA can be turned off by pressing the rear park aid disable switch located in the overhead console switchbank. While the system is disabled, an indicator light will be lit on the switch. You will not see any lights on the rear display if the switch is in the off position.

Downloaded from www.Manualslib.com manuals search engine

How the System Works

Unless disabled, the URPA will turn on automatically when the shift lever is moved into REVERSE (R). When the system turns on, the three lights on the display will illuminate for one and a half seconds to let you know that the system is working. If your vehicle is moving in REVERSE (R) at a speed greater than 3 mph (5 km/h), the red light will flash to remind you that the system does not work at speed greater than 3 mph (5 km/h).

If an object is detected at a REVERSE (R) speed of less than 3 mph (5 km/h), one of the following will occur:

Description	English	Metric
amber light	5 ft	1.5 m
amber/amber lights	40 in	1.0 m
amber/amber/red lights & continuous chime	20 in	0.5 m
amber/amber/red lights flashing & continuous chime	1 ft	0.3 m

A chime will sound the first time an object is detected between 20 inches (0.5 m) and 5 feet (1.5 m) away.

URPA cannot detect objects that are above liftgate level. In order for the rear sensors to recognize an object, it must be within detection range behind the vehicle.

When the System Does Not Seem to Work Properly

The light may flash red when the vehicle is in REVERSE (R) if the ultrasonic sensors are not kept clean. So be sure to keep your rear bumper free of mud, dirt, snow, ice and slush. Other conditions that may affect system performance include things like the vibrations from a jackhammer or the compression of air brakes on a very large truck. If after cleaning the rear bumper and then driving forward at least 15 mph (25 km/h), the display continues to flash red, see your dealer.

If a trailer was attached to your vehicle, or a bicycle or an object was on the back of, or hanging out of your liftgate during your last drive cycle, the light may also flash red. The light will continue to flash whenever in REVERSE (R) until your vehicle is driven forward at least 15 mph (25 km/h) without any obstructions behind the vehicle.

For cleaning instructions, see *Washing Your Vehicle on page 5-86*.

Downloaded from www.Manualslib.com manuals search engine

Accessory Power Outlets

With accessory power outlets you can plug in electrical equipment such as a cellular telephone or CB radio.

The front accessory power outlet is located below the cupholder drawer.

Pull the cover down to use the accessory power outlet. When not in use, keep the cover on.

The rear accessory power outlet is located in the rear compartment on the driver's side next to the air inflator system.

To remove the cover, pull the tab on the cover and pull it off. To put the cover back on, line up the tabs at the back of the cover and put the cover in place. Push down the tab to secure the cover. When not in use, always cover the rear accessory power outlet with the protective cap.

Notice: **Leaving electrical equipment on for extended periods will drain the battery. Always turn off electrical equipment when not in use and do not plug in equipment that exceeds the maximum amperage rating.**

Certain electrical accessories may not be compatible with the accessory power outlet and could result in blown vehicle or adapter fuses. If you experience a problem see your dealer for additional information on accessory power outlets.

Notice: **Adding any electrical equipment to your vehicle may damage it or keep other components from working as they should. The repairs would not be covered by your warranty. Check with your dealer before adding electrical equipment.**

When adding electrical equipment, be sure to follow the proper installation instructions included with the equipment.

Notice: **Improper use of the power outlet can cause damage not covered by your warranty. Do not hang any type of accessory or accessory bracket from the plug because the power outlets are designed for accessory power plugs only.**

Downloaded from www.Manualslib.com manuals search engine

Climate Controls

Climate Control System

With this system you can control the heating, cooling and ventilation for your vehicle.

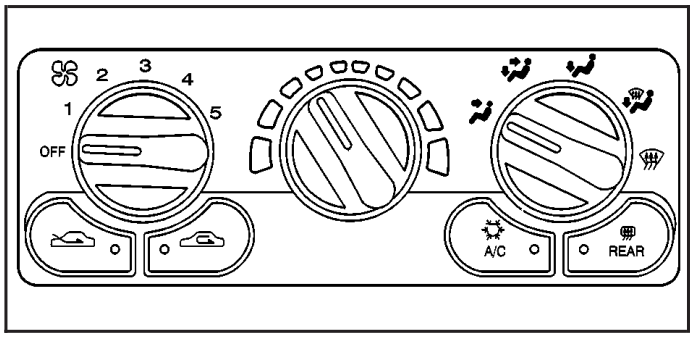

Operation

Turn the right knob clockwise or counterclockwise to direct the airflow inside of your vehicle.

To change the current mode, select one of the following:

(Vent): This mode directs air to the instrument panel outlets.

(Bi-Level): This mode directs half of the air to the instrument panel outlets, then directs the remaining air to the floor outlets. Cooler air is directed to the upper outlets and warmer air to the floor outlets.

(Floor): This mode directs most of the air to the floor outlets. Use this mode to send air to the rear of the vehicle. Keep the area under the front seats free of objects that could obstruct airflow to the rear of the vehicle.

The right knob can also be used to select defog or defrost mode. For more information, see “Defogging and Defrosting” later in this section.

(Fan): Turn the left knob clockwise or counterclockwise to increase or decrease the fan speed. Turn the knob to OFF to turn off the fan. The fan must be turned on for the air conditioning compressor to operate.

(Outside Air): Press this button to turn the outside air mode on or off. When this mode is on, outside air will circulate throughout your vehicle. When this mode is on, an indicator light in the button will come on to let you know that it is activated. The outside air mode can be used with all modes, but it cannot be used with the recirculation mode.

Downloaded from www.Manualslib.com manuals search engine

(Recirculation): This mode keeps outside air from coming in the vehicle. It can be used to prevent outside air and odors from entering your vehicle or help heat or cool the air inside your vehicle more quickly. Press this button to turn the recirculation mode on or off. When the button is pressed, an indicator light will come on. The air-conditioning compressor also comes on. The recirculation mode can be used with vent and bi-level modes, but it cannot be used with floor, defog, defrost or outside air modes.

Temperature Control: Turn the center knob clockwise or counterclockwise to increase or decrease the air temperature inside your vehicle.

A/C (Air Conditioning): Press this button to turn the air-conditioning system on or off. When A/C is pressed, an indicator light in the button will come on to let you know that air conditioning is activated.

You may notice a slight change in engine performance when the air-conditioning compressor shuts off and turns on again. This is normal. The system is designed to make adjustments to help with fuel economy while still maintaining the selected temperature.

On hot days, open the windows to let hot inside air escape; then close them. This helps to reduce the time it takes for your vehicle to cool down. It also helps the system to operate more efficiently.

The air-conditioning system removes moisture from the air, so you may sometimes notice a small amount of water dripping underneath your vehicle while idling or after turning off the engine. This is normal.

Defogging and Defrosting

Fog on the inside of windows is a result of high humidity, or moisture, condensing on the cool window glass. This can be minimized if the climate control system is used properly. There are two modes to clear fog or frost from your windshield. Use the defog mode to clear the windows of fog or moisture and warm the passengers. Use the defrost mode to remove fog or frost from the windshield more quickly.

Turn the right knob to select the defog or defrost mode.

(Defog): This mode directs air to the windshield and the floor outlets. When you select this mode, the system turns off recirculation and runs the air-conditioning compressor unless the outside temperature is at or below freezing. The recirculation mode cannot be selected while in the defog mode.

Downloaded from www.Manualslib.com manuals search engine

(Defrost): Pressing this button directs most of the air to the windshield and the side window outlets, with some air directed to the floor outlets. In this mode, the system will automatically turn off recirculation and run the air-conditioning compressor, unless the outside temperature is at or below freezing. Recirculation cannot be selected while in the defrost mode.

Do not drive the vehicle until all the windows are clear.

Rear Window Defogger

The rear window defogger uses a warming grid to remove fog from the rear window.

REAR: Press this button to turn the rear window defogger on or off. An indicator light in the button will come on to let you know that the rear window defogger is activated.

The rear window defogger will turn off about 10 minutes after the button is pressed. If turned on again, the defogger will only run for about five minutes before turning off. The defogger can also be turned off by pressing the button again or by turning off the engine.

Notice: **Don't use anything sharp on the inside of the rear window. If you do, you could cut or damage the warming grid, and the repairs wouldn't be covered by your warranty. Do not attach a temporary vehicle license, tape, a decal or anything similar to the defogger grid.**

Outlet Adjustment

Use the louvers located on the air outlets to change the direction of the airflow.

Operation Tips

- Clear away any ice, snow, or leaves from the air inlets at the base of the vehicle that may block the flow of air into your vehicle.
- Use of non-GM approved hood deflectors may adversely affect the performance of the system.
- Keep the path under the front seats clear of objects to help circulate the air inside of your vehicle more effectively.

Downloaded from www.Manualslib.com manuals search engine

Rear Climate Control System (Without Entertainment System)

Your vehicle may have a rear climate control system that allows the driver to adjust the fan speed or a rear-seat passenger to set a separate temperature and adjust the fan speed, for the rear seating area. This system works with the main climate control system in your vehicle.

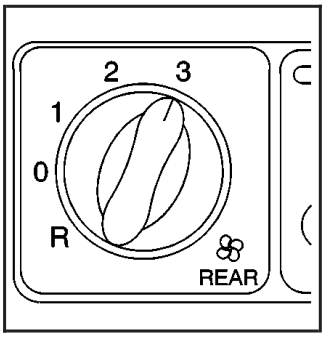

This knob is located below the main climate control system on the instrument panel switchbank. Use this knob to adjust the fan speed for the rear seat passengers.

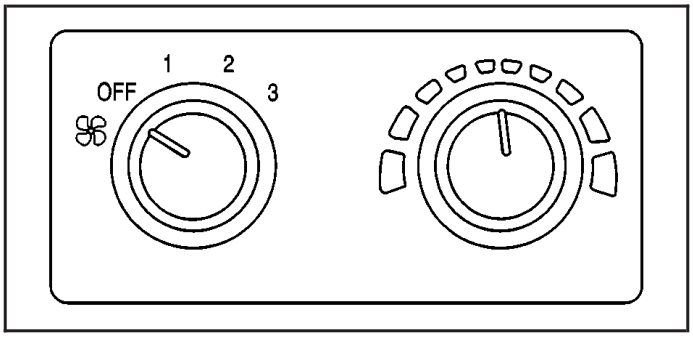

These controls are overhead, on the control panel located behind the driver's seat. A rear seat passenger can use these controls to personally adjust the temperature and the fan speed for the rear seating area.

The fan knob located on the switchbank must be turned to R (Rear) to allow the rear seat passengers to use the controls located on the control panel in the rear seating area. Performing this action disables the fan knob on the switchbank. To return control to that knob, turn the knob out of R.

Downloaded from www.Manualslib.com manuals search engine

To direct the airflow to the rear seating area, use the right knob located on the main climate control panel.

- Select vent or bi-level mode to direct air to the rear of the vehicle through the overhead outlets.
- Select floor, defog, or defrost mode to direct air to the rear of the vehicle through the floor outlets.

Generally the upper outlets are used for air conditioning and the floor outlets are used for heating.

(Fan): Turn the fan knob on either rear fan control to numeral 1, 2, or 3 to increase or decrease airflow to the rear seating area. Turn the fan knob on either rear fan control to 0 or OFF to turn off the fan.

Temperature Control: If the driver is adjusting the temperature, increase or decrease the temperature for the entire vehicle using the temperature controls located on the main climate control panel. The air-conditioning system must be on to direct cooled air to the rear of the vehicle. If it is not on, the temperature in the rear of the vehicle will remain at cabin temperature.

If a rear seat passenger is adjusting the temperature, turn the right knob, located overhead on the control panel behind the driver's seat, clockwise or counterclockwise to raise or lower the temperature in the rear seating area only.

Rear Air Outlets

The outlet behind the left rear seat is the cold air return outlet. Be sure to keep it free from obstructions. Also, keep the area around the base of the center instrument panel console, between and under the front seats, free of objects that could also obstruct airflow to the rear seating area.

For more information on how to use the main climate control system, see *Climate Control System on page 3-26*. For information on ventilation, see *Outlet Adjustment on page 3-28*.

Downloaded from www.Manualslib.com manuals search engine

Rear Climate Control System (With Entertainment System)

Your vehicle may have a rear climate control system that allows the driver to adjust the fan speed or a rear seat passenger to set a separate temperature and adjust the fan speed, for the rear seating area. This system works with the main climate control system in your vehicle.

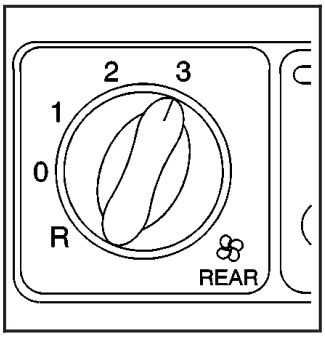

This knob is located below the main climate control system on the instrument panel switchbank. Use this knob to adjust the fan speed for the rear seat passengers.

These controls are overhead, on the control panel located behind the front seats. A rear seat passenger can use these controls to personally adjust the temperature and the fan speed for the rear seating area.

The fan knob located on the switchbank must be turned to R (Rear) to allow the rear seat passengers to use the controls located on the control panel in the rear seating area. If this fan knob is not in R when the FAN or TEMP button is pressed, the rear control panel will show DISABLED.

To direct the airflow to the rear seating area, use the right knob located on the main climate control panel.

- Select vent or bi-level mode to direct air to the rear of the vehicle through the overhead outlets.
- Select floor, defog, or defrost mode to direct air to the rear of the vehicle through the floor outlets.

Generally the upper outlets are used for air conditioning and the floor outlets are used for heating.

Downloaded from www.Manualslib.com manuals search engine

(Fan): If the driver is adjusting the fan speed, use this control. Turn the fan knob on the rear fan control located below the main climate control system on the switchbank to numeral 1, 2, or 3 to increase or decrease airflow to the rear seating area. Turn the fan knob on the rear fan control to 0 to turn off the fan.

FAN: If a rear-seat passenger is adjusting the fan speed, use this control. Press the FAN button on the rear control panel. The display will show the current setting. Press the left and right arrow buttons to cycle through the available settings of OFF, LOW, MED, and HIGH.

Temperature Control: If the driver is adjusting the temperature, increase or decrease the temperature for the entire vehicle using the temperature controls located on the main climate control panel. The air-conditioning system must be on to direct cooled air to the rear of the vehicle. If it is not on, the temperature in the rear of the vehicle will remain at cabin temperature.

If a rear-seat passenger is adjusting the temperature, press the TEMP button on the rear control panel. Use the left arrow button to make the air cooler. Use the right arrow button to make the air warmer.

Rear Air Outlets

The outlet behind the left rear seat is the cold air return outlet. Be sure to keep it free from obstructions. Also, keep the area around the base of the center instrument panel console, between and under the front seats, free of objects that could also obstruct airflow to the rear seating area.

For more information on how to use the main climate control system, see *Climate Control System on page 3-26*. For information on ventilation, see *Outlet Adjustment on page 3-28*.

Passenger Compartment Air Filter

Passenger compartment air, both outside and recirculated air, is routed through a passenger compartment filter. The filter removes most particles from the air, including dust particles. Reductions in airflow, which may occur more quickly in dusty areas, indicate that the filter needs to be replaced early. For how often to change the air filter, see *Scheduled Maintenance on page 6-4*.

Downloaded from www.Manualslib.com manuals search engine

The access panel for the passenger compartment air filter is located in the back of the glove box. To replace the filter, do the following:

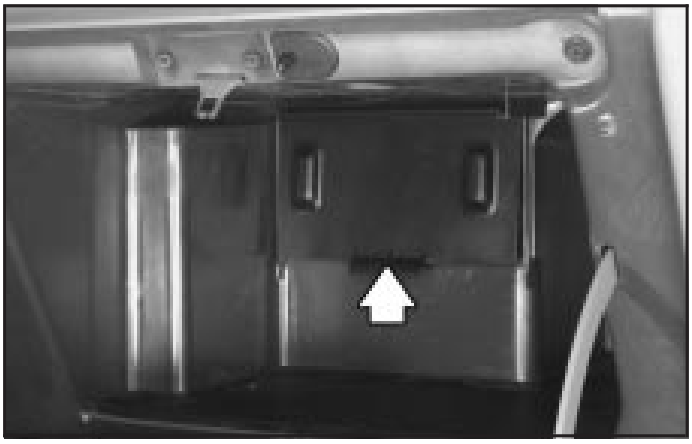

1. Pull the tab located on the outer access panel up and out.

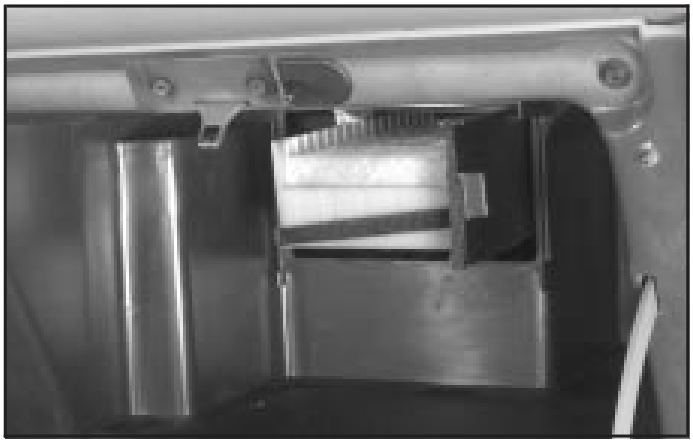

2. Then push the tab, located on the left of the inner access panel, to the right.
3. The first air filter will pull straight out. To remove the second, reach in and slide it toward the opening. Pull the second filter out.
4. Replace the filters by reversing Step 3. Make sure the filters are inserted so that the sealing foam is angled in the same direction on both filters. For the type of filter to use, see *Normal Maintenance Replacement Parts on page 6-14*.
5. Close the inner access door, while squeezing the tab. Be sure it is tightly closed.
6. Snap the outer access panel into the back of the glove box.

Downloaded from www.Manualslib.com manuals search engine

Warning Lights, Gages, and Indicators

This part describes the warning lights and gages that may be on your vehicle. The pictures will help you locate them.

Warning lights and gages can signal that something is wrong before it becomes serious enough to cause an expensive repair or replacement. Paying attention to your warning lights and gages could also save you or others from injury.

Warning lights come on when there may be or is a problem with one of your vehicle's functions. As you will see in the details on the next few pages, some warning lights come on briefly when you start the engine just to let you know they're working. If you are familiar with this section, you should not be alarmed when this happens.

Gages can indicate when there may be or is a problem with one of your vehicle's functions. Often gages and warning lights work together to let you know when there's a problem with your vehicle.

When one of the warning lights comes on and stays on when you are driving, or when one of the gages shows there may be a problem, check the section that tells you what to do about it. Please follow this manual's advice. Waiting to do repairs can be costly – and even dangerous. So please get to know your warning lights and gages. They're a big help.

Your vehicle also has a message center that works along with the warning lights and gages. See *Message Center on page 3-45*.

Downloaded from www.Manualslib.com manuals search engine

Instrument Panel Cluster

Your instrument panel cluster is designed to let you know at a glance how your vehicle is running. You'll know how fast you're going, how much fuel you're using, and many other things you'll need to drive safely and economically. The indicator warning lights and gages are explained on the following pages.

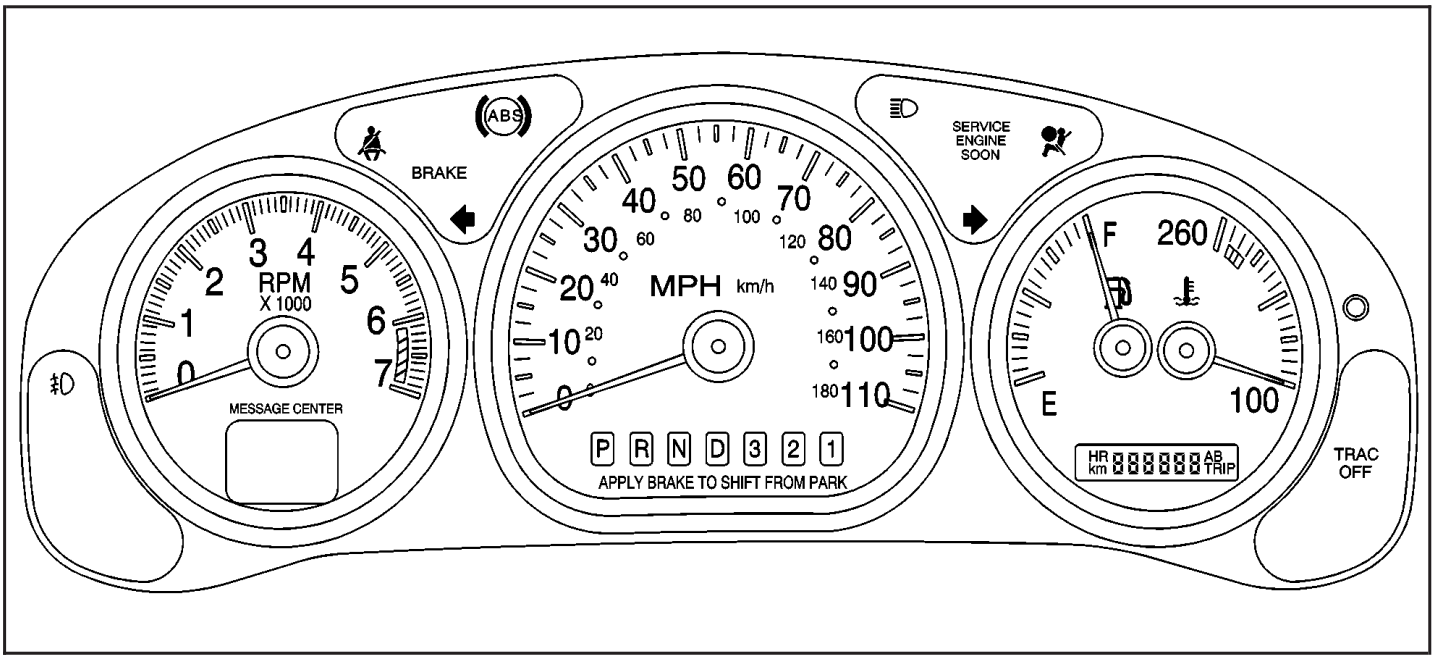

United States version shown, Canada similar

Downloaded from www.Manualslib.com manuals search engine

Speedometer and Odometer

Your speedometer lets you see your speed in both miles per hour (mph) and kilometers per hour (km/h). Your odometer shows how far your vehicle has been driven, in either miles (used in the United States) or kilometers (used in Canada).

Your vehicle has a tamper-resistant odometer.

You may wonder what happens if your vehicle needs a new odometer installed. If the new one can be set to the mileage total of the old odometer, then that will be done. If it cannot be, it will be set at zero and a label must be put on the driver's door to show the old mileage reading when the new odometer was installed.

Dual Trip Odometers

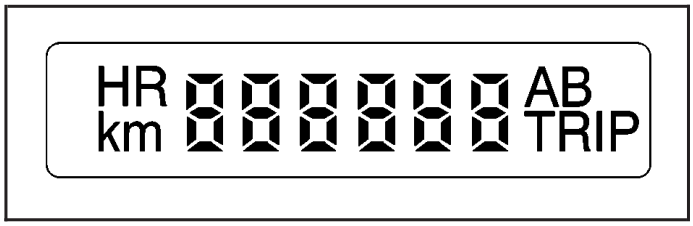

In addition to the standard odometer, the cluster can also display two separate trip odometers, designated by the letter A or B in the display window, as well as your vehicle's Engine Oil Life, which is designated by the word OIL in the display window. The display can be toggled between the odometer, the trip odometers, and engine oil life by quickly pressing and releasing the trip/reset button located to the right of the temperature gage. The display toggles once each time the trip/reset button is pressed for less than 1.5 seconds. The display toggles in the following sequence: Odometer - Trip Odometer A - Trip Odometer B - Engine Oil Life. If the engine oil life is left on the display, it will automatically toggle back to the odometer after about 15 seconds. Each of the two trip odometers can be used to keep track of different trip distances, such as the mileage of a long trip and the mileage driven on the current tank of fuel. The trip odometers will continue to keep track of miles (kilometers) driven even if they are not currently displayed. To reset the odometer to zero, press and hold the trip/reset button for at least 1.5 seconds, but less than three seconds. Only the trip odometer that is showing in the display will be reset.

Downloaded from www.Manualslib.com manuals search engine

Retro-Active Reset

Each of the two trip odometers has a feature called retro-active reset. This feature can be used to set either or both trip odometer(s) to the number of miles (kilometers) driven since the ignition was last turned on. This can be used if you forget to reset your trip odometer at the beginning of a trip. To use the retro-active reset feature, press and hold the trip/reset button for at least three seconds. The trip odometer will then display the number of miles (kilometers) driven since the ignition was last turned on and you began driving. If you use the retro-active reset feature after you have started the vehicle, but before you begin moving, the display will show the number of miles (kilometers) you drove during the last ignition cycle. Once you begin driving, the trip odometer will accumulate mileage. For example, if you have driven 5.0 miles (8.0 km) since you started your vehicle, and then activate the retro-active reset feature, the display will show 5.0 miles (8.0 km). As you drive, the display will then increase to 5.1 miles (8.2 km), 5.2 miles (8.4 km), etc. Only the trip odometer that is displayed will be affected by the retro-active reset so that both trip odometers can be used separately.

Tachometer

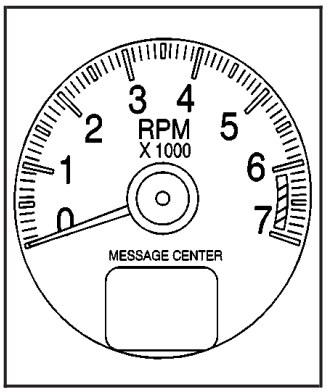

The tachometer displays the engine speed in revolutions per minute (rpm).

Notice: **If you operate the engine with the tachometer in the shaded warning area, your vehicle could be damaged, and the damages would not be covered by your warranty. Do not operate the engine with the tachometer in the shaded warning area.**

Downloaded from www.Manualslib.com manuals search engine

Safety Belt Reminder Light

When the key is turned to RUN or START, a chime will come on for several seconds to remind people to fasten their safety belts.

The safety belt light will also come on and stay on for several seconds. If the driver's belt is already buckled, neither the chime nor the light will come on.

Airbag Readiness Light

There is an airbag readiness light on the instrument panel, which shows the airbag symbol. The system checks the airbag's electrical system for malfunctions. The light tells you if there is an electrical problem. The system check includes the airbag sensor, the airbag modules, the wiring and the diagnostic module. For more information on the airbag system, see *Airbag System on page 1-81*.

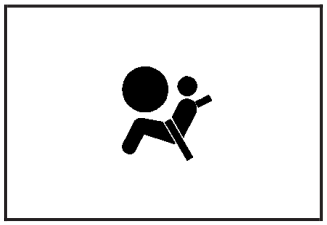

This light will come on when you start your vehicle, and it will flash for a few seconds. Then the light should go out. This means the system is ready.

If the airbag readiness light stays on after you start the vehicle or comes on when you are driving, your airbag system may not work properly. Have your vehicle serviced right away.

⚠ CAUTION:

If the airbag readiness light stays on after you start your vehicle, it means the airbag system may not be working properly. The airbags in your vehicle may not inflate in a crash, or they could even inflate without a crash. To help avoid injury to yourself or others, have your vehicle serviced right away if the airbag readiness light stays on after you start your vehicle.

Downloaded from www.Manualslib.com manuals search engine

The airbag readiness light should flash for a few seconds when you turn the ignition key to RUN. If the light doesn't come on then, have it fixed so it will be ready to warn you if there is a problem.

Brake System Warning Light

When the ignition is on, the brake system warning light will come on when you set your parking brake. The light will stay on if your parking brake doesn't release fully. If it stays on after your parking brake is fully released, it means you have a brake problem.

Your vehicle's hydraulic brake system is divided into two parts. If one part isn't working, the other part can still work and stop you. For good braking, though, you need both parts working well.

If the warning light comes on, there could be a brake problem. Have your brake system inspected right away.

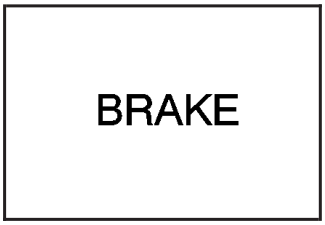

United States

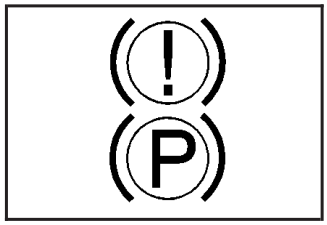

Canada

This light should come on briefly when you turn the ignition key to RUN. If it doesn't come on then, have it fixed so it will be ready to warn you if there's a problem.

If the light comes on while you are driving, pull off the road and stop carefully. You may notice that the pedal is harder to push. Or, the pedal may go closer to the floor. It may take longer to stop. If the light is still on, have the vehicle towed for service. See *Anti-Lock Brake System Warning Light on page 3-40* and *Towing Your Vehicle on page 4-34*.

⚠ CAUTION:

Your brake system may not be working properly if the brake system warning light is on. Driving with the brake system warning light on can lead to an accident. If the light is still on after you have pulled off the road and stopped carefully, have the vehicle towed for service.

Downloaded from www.Manualslib.com manuals search engine

Anti-Lock Brake System Warning Light

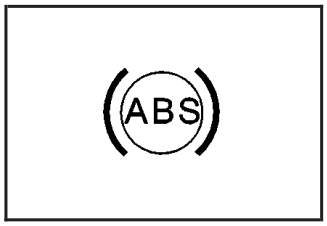

Your vehicle may have this light. If it does, the anti-lock brake system warning light should come on for a few seconds when you turn the ignition key to RUN.

If the anti-lock brake system warning light stays on longer than normal after you've started your engine, turn the ignition off. Or, if the light comes on and stays on when you're driving, stop as soon as possible and turn the ignition off. Then start the engine again to reset the system. If the light still stays on, or comes on again while you're driving, the anti-lock brake system needs service and you don't have anti-lock brakes.

The anti-lock brake system warning light should come on briefly when you turn the ignition key to RUN. If the light doesn't come on then, have it fixed so it will be ready to warn you if there is a problem.

Traction Control System (TCS) Warning Light

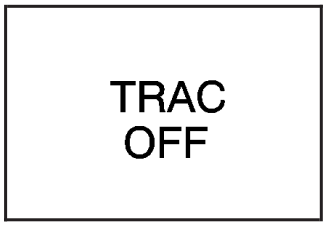

United States

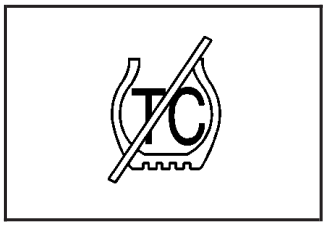

Canada

Your vehicle may have a traction control system warning light. The traction control system warning light may come on for the following reasons:

- If you turn the system off by pressing the TCS button located in the instrument panel switchbank the warning light will come on and stay on. To turn the system back on, press the button again. The warning light should go off. See *Traction Control System (TCS) on page 4-8* for more information.
- If there's a brake system problem that is specifically related to traction control, the traction control system will turn off and the warning light will come on. If your brakes begin to overheat, the traction control system will turn off and the warning light will come on until your brakes cool down.

Downloaded from www.Manualslib.com manuals search engine

- If the traction control system is affected by an engine-related problem, the system will turn off and the warning light will come on.

If the traction control system warning light comes on and stays on for an extended period of time when the system is turned on, your vehicle needs service.

Engine Coolant Temperature Gage

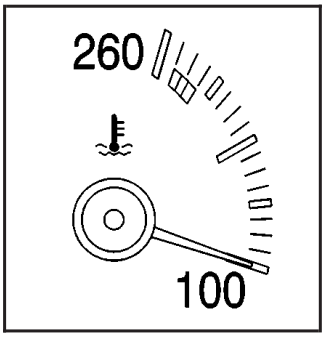

United States

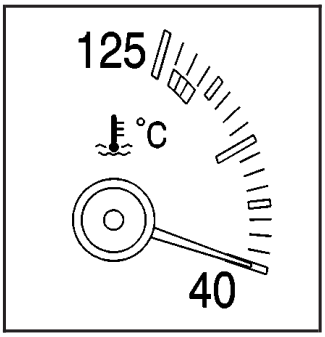

Canada

This gage shows the engine coolant temperature. If the gage pointer moves into the red area, your engine is too hot!

It means that your engine coolant has overheated. If you have been operating your vehicle under normal driving conditions, you should pull off the road, stop your vehicle and turn off the engine as soon as possible.

See *Engine Overheating on page 5-25*.

Malfunction Indicator Lamp

Service Engine Soon Light in the United States or Check Engine Light in Canada

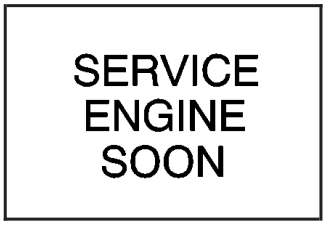

United States

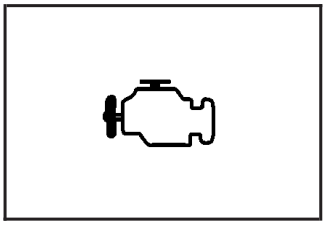

Canada

Your vehicle is equipped with a computer which monitors operation of the fuel, ignition, and emission control systems.

This system is called OBD II (On-Board Diagnostics-Second Generation) and is intended to assure that emissions are at acceptable levels for the life of the vehicle, helping to produce a cleaner environment. The SERVICE ENGINE SOON or check engine light comes on to indicate that there is a problem and service is required. Malfunctions often will be indicated by the system before any problem is apparent.

Downloaded from www.Manualslib.com manuals search engine

This may prevent more serious damage to your vehicle. This system is also designed to assist your service technician in correctly diagnosing any malfunction.

Notice: **If you keep driving your vehicle with this light on, after awhile, your emission controls may not work as well, your fuel economy may not be as good, and your engine may not run as smoothly. This could lead to costly repairs that may not be covered by your warranty.**

Notice: **Modifications made to the engine, transaxle, exhaust, intake, or fuel system of your vehicle or the replacement of the original tires with other than those of the same Tire Performance Criteria (TPC) can affect your vehicle's emission controls and may cause this light to come on. Modifications to these systems could lead to costly repairs not covered by your warranty. This may also result in a failure to pass a required Emission Inspection/Maintenance test.**

This light should come on, as a check to show you it is working, when the ignition is on and the engine is not running. If the light does not come on, have it repaired. This light will also come on during a malfunction in one of two ways:

- **Light Flashing** — A misfire condition has been detected. A misfire increases vehicle emissions and may damage the emission control system on your vehicle. Diagnosis and service may be required.
- **Light On Steady** — An emission control system malfunction has been detected on your vehicle. Diagnosis and service may be required.

If the Light Is Flashing

The following may prevent more serious damage to your vehicle:

- Reducing vehicle speed
- Avoiding hard accelerations
- Avoiding steep uphill grades
- If you are towing a trailer, reduce the amount of cargo being hauled as soon as it is possible

If the light stops flashing and remains on steady, see "If the Light Is On Steady" following.

If the light continues to flash, when it is safe to do so, stop the vehicle. Find a safe place to park your vehicle. Turn the key off, wait at least 10 seconds and restart the engine. If the light remains on steady, see "If the Light Is On Steady" following. If the light is still flashing, follow the previous steps, and see your dealer for service as soon as possible.

Downloaded from www.Manualslib.com manuals search engine

If the Light Is On Steady

You may be able to correct the emission system malfunction by considering the following:

Did you recently put fuel into your vehicle?

If so, reinstall the fuel cap, making sure to fully install the cap. See *Filling Your Tank on page 5-8*. The diagnostic system can determine if the fuel cap has been left off or improperly installed. A loose or missing fuel cap will allow fuel to evaporate into the atmosphere. A few driving trips with the cap properly installed should turn the light off.

Did you just drive through a deep puddle of water?

If so, your electrical system may be wet. The condition will usually be corrected when the electrical system dries out. A few driving trips should turn the light off.

Have you recently changed brands of fuel?

If so, be sure to fuel your vehicle with quality fuel. See *Gasoline Octane on page 5-5*. Poor fuel quality will cause your engine not to run as efficiently as designed. You may notice this as stalling after start-up, stalling when you put the vehicle into gear, misfiring, hesitation on acceleration, or stumbling on acceleration. (These conditions may go away once the engine is warmed up.) This will be detected by the system and cause the light to turn on.

If you experience one or more of these conditions, change the fuel brand you use. It will require at least one full tank of the proper fuel to turn the light off.

If none of the above steps have made the light turn off, your dealer can check the vehicle. Your dealer has the proper test equipment and diagnostic tools to fix any mechanical or electrical problems that may have developed.

Downloaded from www.Manualslib.com manuals search engine

Emissions Inspection and Maintenance Programs

Some state/provincial and local governments have or may begin programs to inspect the emission control equipment on your vehicle. Failure to pass this inspection could prevent you from getting a vehicle registration.

Here are some things you need to know in order to help your vehicle pass an inspection:

Your vehicle will not pass this inspection if the SERVICE ENGINE SOON or check engine light is on or not working properly.

Your vehicle will not pass this inspection if the OBD (on-board diagnostic) system determines that critical emission control systems have not been completely diagnosed by the system. The vehicle would be considered not ready for inspection. This can happen if you have recently replaced your battery or if your battery has run down. The diagnostic system is designed to evaluate critical emission control systems during normal driving. This may take several days of routine driving. If you have done this and your vehicle still does not pass the inspection for lack of OBD system readiness, your GM dealer can prepare the vehicle for inspection.

Highbeam On Light

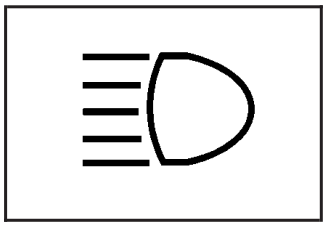

This light will illuminate when the headlamp high beams are in use.

See *Headlamp High/Low-Beam Changer on page 3-9*.

Downloaded from www.Manualslib.com manuals search engine

Fuel Gage

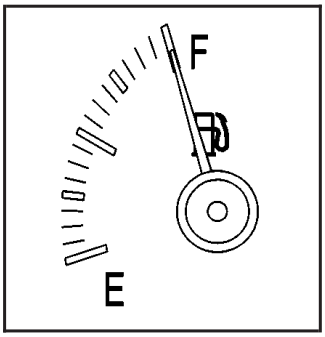

United States

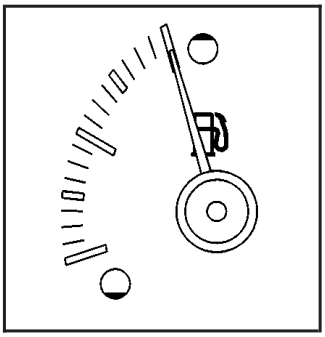

Canada

When the indicator nears empty, you still have a little fuel left, but you should get more soon.

If your fuel is low, the warning message in the message center will come on. See *Low Fuel Warning Message on page 3-51*.

Your fuel gage tells you about how much fuel you have left when the ignition is on.

Here are four things some owners ask about. All these things are normal and do not indicate that anything is wrong with the fuel gage.

- At the gas station, the gas pump shuts off before the gage reads full.
- It takes a little more (or less) fuel to fill up than the gage reads. For example, the gage read half full, but it took more (or less) than half of the tank's capacity to fill it.
- The gage pointer may move while cornering, braking or speeding up.
- The gage may not indicate empty when the ignition is turned off.

Message Center

The message center is located in the instrument panel cluster. It gives you important safety and maintenance facts.

Downloaded from www.Manualslib.com manuals search engine

Service Traction System Warning Message

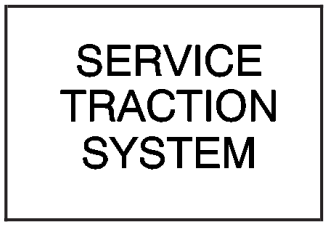

United States

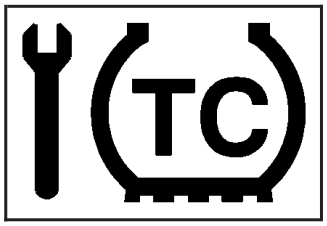

Canada

If your vehicle has the traction control system and this message is displayed when you're driving, there may be a problem with your traction control system. Your vehicle may need service.

When this message is displayed, the traction control system will not limit wheel spin. Adjust your driving accordingly.

The message may appear for the following reasons:

- If there's a brake system problem that is specifically related to traction control, the traction control system will turn off and the warning message will come on.
- If your brakes begin to overheat, the traction control system will turn off and the warning message will come on until your brakes cool down.
- If the traction control system is affected by an engine-related problem, the system will turn off and the warning message will come on.

If the traction control system warning message comes on and stays on for an extended period of time when the system is turned on, your vehicle needs service.

Traction Active Message

United States

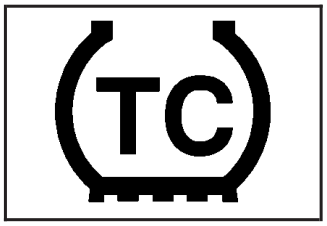

Canada

If your vehicle has the traction control system, the TRACTION ACTIVE message will appear when the traction control system is limiting wheel spin. You may feel or hear the system working, but this is normal.

Slippery road conditions may exist if this message appears, so adjust your driving accordingly. The message will stay on for a few seconds after the traction control system stops limiting wheel spin.

Downloaded from www.Manualslib.com manuals search engine

Engine Coolant Temperature Warning Message

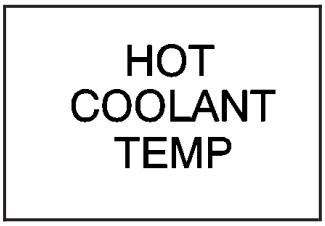

United States

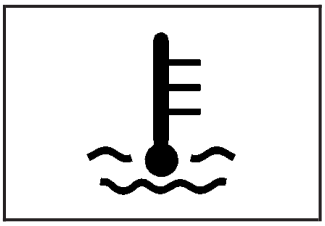

Canada

This message will come on when your engine gets too hot.

If this message comes on, it means that your engine coolant has overheated. If you have been operating your vehicle under normal driving conditions, you should pull off the road, stop your vehicle and turn off the engine as soon as possible.

See *Engine Overheating on page 5-25*.

Charging System Indicator Message

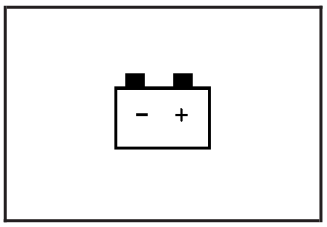

The charging system battery symbol will come on in the message center when you turn on the ignition as a check to show you it is working.

It will remain on as long as the engine is not running. It should go out once the engine is running. If it stays on, or comes on while you are driving, you may have a problem with the charging system. It could indicate that you have problems with a generator drive belt, or another electrical problem. Have it checked right away. Driving while this indicator appears in the message center could drain your battery.

If you must drive a short distance with the message on, be certain to turn off all your accessories, such as the radio and air conditioner.

Downloaded from www.Manualslib.com manuals search engine

Low Oil Pressure Message

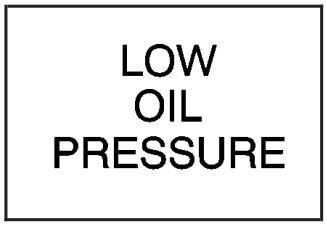

United States

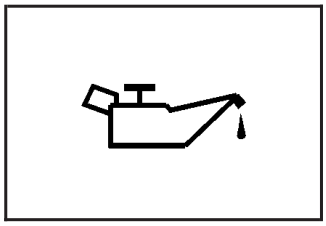

Canada

Your vehicle is equipped with a low oil pressure warning message.

Your oil pressure message lets you know when you may have a problem with your engine oil pressure.

When the engine is running and this message appears, the engine oil level may be too low. There may also be another problem causing low oil pressure.

⚠ CAUTION:

Do not keep driving if the oil pressure is low. If you do, your engine can become so hot that it catches fire. You or others could be burned. Check your oil as soon as possible and have your vehicle serviced.

Notice: **Lack of proper engine oil maintenance may damage the engine. The repairs would not be covered by your warranty. Always follow the maintenance schedule in this manual for changing engine oil.**

Downloaded from www.Manualslib.com manuals search engine

Change Engine Oil Message

CHANGE
ENGINE
OIL

United States

Canada

When this message comes on and stays on after you have started the engine, it means that service is required for your vehicle. See *Scheduled Maintenance on page 6-4* and *Engine Oil on page 5-13* for more information.

Power Sliding Door Warning Message

DOOR
AJAR

United States

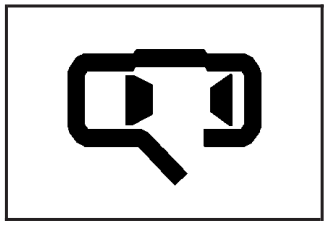

Canada

This message will come on if the power sliding door is not completely closed and the ignition is turned to RUN or START.

If you shift the transaxle out of PARK (P) while the power sliding door is open or in the process of closing, and the power sliding door is turned off, a buzzer will sound. This is a warning that the power sliding door is not completely closed.

⚠ CAUTION:

If you shift the transaxle out of PARK (P) and accelerate before the power sliding door latches closed, the door may reverse to the open position. A child or others could fall out of the vehicle and be injured. Always make sure the power sliding door is closed and latched before you drive away.

Downloaded from www.Manualslib.com manuals search engine

Door Ajar Warning Message

United States

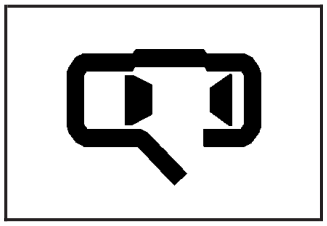

Canada

This message will come on when the ignition is turned to RUN or START and the driver's or passenger's door is open.

It may also come on if a sliding door is not in the fully latched position.

Rear Hatch Ajar Warning Message

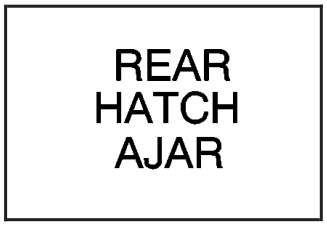

United States

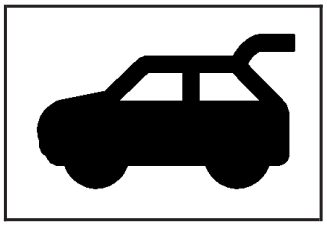

Canada

This message will come on when the ignition is turned to RUN or START and the rear hatch is open.

Downloaded from www.Manualslib.com manuals search engine

PASS-Key® III Security Message

United States

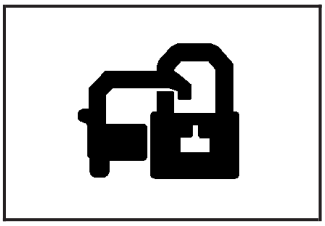

Canada

If you are ever driving and this message comes on and stays on, you will be able to restart your engine if you turn it off.

Your PASS-Key® III system, however, is not working properly and must be serviced by your dealer. Your vehicle is not protected by the PASS-Key® III system at this time. See *PASS-Key® III on page 2-28* for more information.

Low Fuel Warning Message

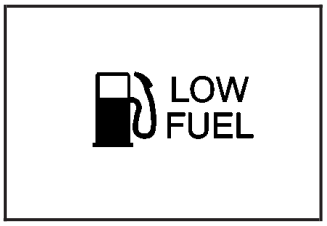

United States

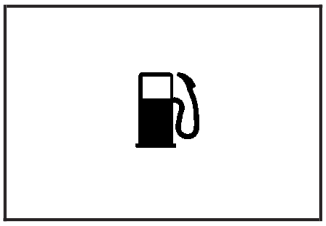

Canada

If your fuel is low, the warning message will come on and stay on until you add fuel.

If the warning message is still on after adding fuel, you need to reset the warning message. To reset the warning message, turn the ignition off and then back on. If the message stays on, see your dealer.

Downloaded from www.Manualslib.com manuals search engine

Driver Information Center (DIC)

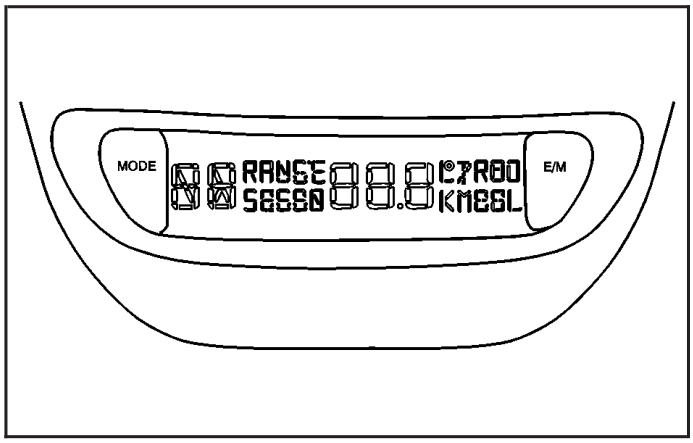

Your vehicle may have a DIC. If it does, the DIC will show information about the vehicle and the surroundings.

E/M (English/Metric Button): You can change the display to a metric or English reading at any time by pressing E/M.

MODE: Press this button to cycle through three modes of operation — off, compass/temperature and trip computer mode.

Off: No driver information is displayed in this mode of operation.

Compass/Temperature Mode: One of eight compass readings and the outside temperature are displayed. If the temperature is below 38°F (3°C), the temperature reading will toggle between displaying the outside temperature and the word ICE for two minutes.

Trip Computer Mode: In the trip computer mode, pressing the MODE button cycles through the five displays. Press the MODE button after the last trip computer display to return the DIC to the OFF mode. See “Trip Computer” later in this section for more information.

Compass Variance

Compass variance is the difference between magnetic north and geographic north. In some areas of the country, the difference is great enough to cause the compass to give false readings. If this occurs, the compass variance must be set.

Downloaded from www.Manualslib.com manuals search engine

Setting the Variance

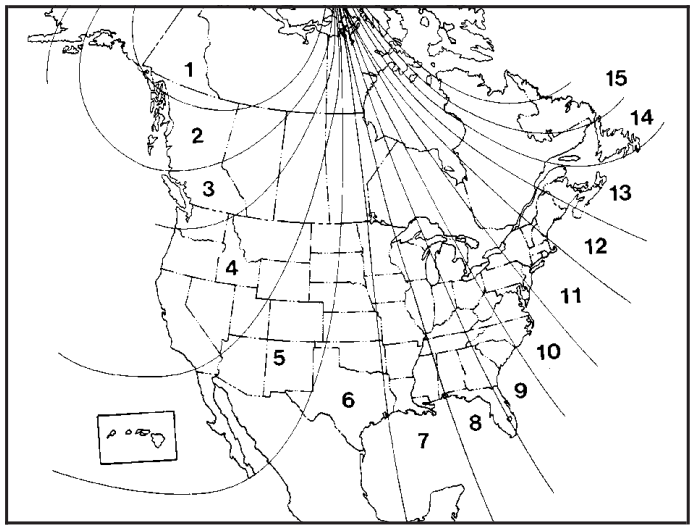

Turn the ignition on and cycle the DIC to the compass/temperature mode. Press both the E/M and MODE buttons simultaneously for about five seconds. The last entered variance zone number will be displayed. Press the E/M button until the proper variance number, as shown on the map for your location is shown. Press the MODE button to set the new variance zone and resume normal operation.

The display will show all the display segments briefly to acknowledge the change in the zone number.

Automatic Compass Calibration

The compass is self-calibrating, which eliminates the need to manually set the compass. When the vehicle is new, the calibration process may not be complete. In these cases the calibration symbol C will be displayed where the compass reading is normally displayed.

To calibrate the compass, in an area free from large metal objects, make three 360° turns. The calibration symbol will turn off and the compass reading will be displayed.

Manual Compass Calibration

If the compass appears erratic and the calibration symbol does not appear, you must manually put the compass into the calibration mode.

Turn the ignition on and cycle the DIC to the compass/temperature mode. Press both the E/M and MODE buttons simultaneously for at least 10 seconds until the calibration symbol appears. Release both buttons and complete three 360° turns in an area free from large metal objects. The calibration symbol will turn off and the compass reading will be displayed.

Downloaded from www.Manualslib.com manuals search engine

Error Displays

- An error of the vehicle's speed sensor or fuel sender will cause -E- to be displayed.
- In the absence of vehicle communications, a dash "- -" is displayed.

If one of these error messages appear, see your dealer.

Trip Computer

There are five trip computer displays available by pushing the MODE button. The information will appear in the following order:

AVG ECON (Average Fuel Economy): This shows the average fuel economy since the last reset.

INST ECON (Instant Fuel Economy): This shows fuel economy for the most recent second of driving.

RANGE (Trip Range): This shows the estimated distance that can be traveled with the remaining fuel. The fuel economy used to calculate range is based on the last few hours of driving.

FUEL USED (Trip Fuel Used): This shows the accumulated fuel used since the last reset.

AVG SPEED (Average Speed): This shows the average speed since the last reset.

Resetting the Trip Computer

Press and hold the MODE and E/M buttons for at least two seconds. The reset is acknowledged with the display showing all segments briefly. A reset can only be done in AVG ECON, FUEL USED and AVG SPEED displays. AVG ECON, FUEL USED and AVG SPEED can only be reset independently. Only the mode that is displayed will be reset.

Downloaded from www.Manualslib.com manuals search engine

Audio System(s)

Notice: **Before adding any sound equipment to your vehicle, like a tape player, CB radio, mobile telephone, or two-way radio, make sure that it can be added by checking with your dealer. Also, check federal rules covering mobile radio and telephone units. If sound equipment can be added, it is very important to do it properly. Added sound equipment may interfere with the operation of your vehicle's engine, radio, or other systems, and even damage them. Your vehicle's systems may interfere with the operation of sound equipment that has been added improperly.**

Figure out which audio system is in your vehicle, find out what your audio system can do, and how to operate all of its controls.

Your vehicle has a feature called Retained Accessory Power (RAP). With RAP, the audio system can be played even after the ignition is turned off. See *Retained Accessory Power (RAP) on page 2-31* for more information.

Setting the Time

The radio may have a button marked with an H or HR to represent hours and an M or MIN to represent minutes.

Press and hold the hour button until the correct hour appears on the display. AM will appear for morning hours. Press and hold the minute button until the correct minute appears on the display. The time can be set with the ignition on or off.

To synchronize the time with an FM station broadcasting Radio Data System (RDS) information, press and hold the hour and minute buttons at the same time until UPDATED appears on the display. If the time is not available from the station, NO UPDATE will appear on the display.

RDS time is broadcast once a minute. After tuning to an RDS broadcast station, it may take a few minutes for the time to update.

Downloaded from www.Manualslib.com manuals search engine

Radio with CD (Base Level)

Radio Data System (RDS)

The audio system has a Radio Data System (RDS). RDS features are available for use only on FM stations that broadcast RDS information.

With RDS, the radio can do the following:

- Seek to stations broadcasting the selected type of programming
- Receive announcements concerning local and national emergencies
- Display messages from radio stations
- Seek to stations with traffic announcements

This system relies upon receiving specific information from these stations and will only work when the information is available. In rare cases, a radio station may broadcast incorrect information that will cause the radio features to work improperly. If this happens, contact the radio station.

While the radio is tuned to an RDS station, the station name or call letters will appear on the display instead of the frequency. RDS stations may also provide the time of day, a program type (PTY) for current programming, and the name of the program being broadcast.

XM™ Satellite Radio Service

XM™ is a satellite radio service that is based in the 48 contiguous United States. XM™ offers 100 coast to coast channels including music, news, sports, talk, and children's programming. XM™ provides digital quality audio and text information that includes song title and artist name. A service fee is required in order to receive the XM™ service. For more information, contact XM™ at www.xmradio.com or call 1-800-852-XMXM (9696).

Downloaded from www.Manualslib.com manuals search engine

Playing the Radio

PWR (Power): Push this knob to turn the system on and off.

VOL (Volume): Turn this knob to increase or to decrease the volume.

RCL (Recall): Push this knob to switch the display between the radio station frequency and the time. Push this knob to display the time with the ignition off.

For RDS, push the RCL knob to change what appears on the display while using RDS. The display options are station, RDS station frequency, PTY, and the name of the program (if available).

For XM™ (if equipped), push the RCL knob while in XM™ mode to retrieve four different categories of information related to the current song or channel: Artist, Song Title, Category or PTY, Channel Number/Channel Name.

To change the default on the display, push the RCL knob until you see the display you want, then hold the knob until the display flashes. The selected display will now be the default.

SCV (Speed-Compensated Volume): With SCV, the audio system adjusts automatically to make up for road and wind noise as you drive.

Set the volume at the desired level. Press this button to select MIN, MED, or MAX. Each higher setting allows for more volume compensation at faster vehicle speeds. Then, as you drive, SCV automatically increases the volume, as necessary, to overcome noise at any speed. The volume level should always sound the same to you as you drive. If you do not want to use SCV, select OFF.

Finding a Station

BAND: Press this button to switch between FM1, FM2, AM, or XM1 or XM2 (if equipped). The display will show the selection.

TUNE: Turn this knob to select radio stations.

△ **SEEK** ▽**:** Press the up or the down arrow to go to the next or to the previous station and stay there.

The radio will only seek stations with a strong signal that are in the selected band.

Downloaded from www.Manualslib.com manuals search engine

△ **SCAN** ▽**:** Press and hold either SCAN arrow for two seconds until SCAN appears on the display and you hear a beep. The radio will go to a station, play for a few seconds, then go on to the next station. Press either SCAN arrow again to stop scanning.

To scan preset stations, press and hold either SCAN arrow for more than four seconds until PSCAN and the preset number appear on the display. You will hear a double beep. The radio will go to the first preset station stored on your pushbuttons, play for a few seconds, then go on to the next preset station. Press either SCAN arrow again to stop scanning presets.

The radio will only scan stations with a strong signal that are in the selected band.

Setting Preset Stations

Up to 30 stations (six FM1, six FM2, and six AM, six XM1 and six XM2 (if equipped)), can be programmed on the six numbered pushbuttons, by performing the following steps:

1. Turn the radio on.
2. Press BAND to select FM1, FM2, AM, or XM1 or XM2.
3. Tune in the desired station.
4. Press EQ to select the equalization.
5. Press and hold one of the six numbered pushbuttons until you hear a beep. Whenever that numbered pushbutton is pressed, the station that was set will return and the equalization that was selected will be stored for that pushbutton.
6. Repeat the steps for each pushbutton.

Setting the Tone (Bass/Treble)

TONE: Press and release this button until BASS, MID, or TREB appears on the display. The SELECT LED indicator will light to show that the tone control can be adjusted. Turn the SELECT knob to increase or to decrease. If a station is weak or noisy, decrease the treble.

To return all of the tone controls to the middle position press and hold the TONE button until FLAT appears on the display.

EQ (Equalizer): Press this button to select customized equalization settings.

Up to six customized equalization settings, can be programmed, by performing the following steps:

1. Turn the radio on.
2. Use the TONE button and the SELECT knob to create the equalization.

Downloaded from www.Manualslib.com manuals search engine

3. Press and hold the EQ button for two seconds. SELECT EQ # will appear on the display and the EQ symbol will flash.
4. Press EQ or turn the SELECT knob to select the EQ number.
5. Press and hold the EQ button or push the SELECT knob to store the equalization setting and the number. EQ SAVED will appear on the display and you will hear a beep.
6. Repeat the steps for the other EQ settings and numbers.

EQ 5 has been programmed at the factory for use with talk radio, but it can be set to a different tone.

Adjusting the Speakers (Balance/Fade)

BAL (Balance): To adjust the balance between the right and the left speakers, press and release this button until BAL appears on the display. The SELECT LED indicator will light to show that the speakers can be adjusted. Turn the SELECT knob to move the sound toward the right or the left speakers.

FADE: To adjust the fade between the front and the rear speakers, press and release this button until FADE appears on the display. The SELECT LED indicator will light to show that the speakers can be adjusted. Turn the SELECT knob to move the sound toward the front or the rear speakers.

To return all speaker settings to the middle position, press and hold the BAL FADE button for two seconds.

Finding a Program Type (PTY) Station (RDS and XM™)

To select and find a desired PTY perform the following:

1. Press PROG TYPE to activate program type select mode. The PTY symbol will appear on the display.
2. Turn the SELECT knob to select a PTY.
3. Once the desired PTY is displayed, press either SEEK arrow to select the PTY and take you to the PTY's first station.
4. To go to another station within that PTY and the PTY is displayed, press either SEEK arrow once. If the PTY is not displayed, press either SEEK arrow twice to display the PTY and then to go to another station.
5. Press PROG TYPE to exit program type select mode.

   If PTY times out and is no longer on the display, go back to Step 1.

If both PTY and TRAF are on, the radio will search for stations with the selected PTY and traffic announcements.

Downloaded from www.Manualslib.com manuals search engine

SCAN: Scan the stations within a PTY by performing the following:

1. Press PROG TYPE to activate program type select mode. The PTY symbol will appear on the display.
2. Turn the SELECT knob to select a PTY.
3. Once the desired PTY is displayed, press and hold either SCAN arrow, and the radio will begin scanning the stations in the PTY.
4. Press either SCAN arrow to stop at a station.

If both PTY and TRAF are on, the radio will scan for stations with the selected PTY and traffic announcements.

BAND (Alternate Frequency): Alternate frequency allows the radio to switch to a stronger station with the same program type. To turn alternate frequency on, press and hold BAND for two seconds. AF ON will appear on the display. The radio may switch to stations with a stronger frequency.

To turn alternate frequency off, press and hold BAND again for two seconds. AF OFF will appear on the display. The radio will not switch to other stations.

This function does not apply for XM™ Satellite Radio Service.

Setting Preset PTYs (RDS Only)

These pushbuttons have factory PTY presets. Up to 12 PTYs (six FM1 and six FM2), can be programmed on the six numbered pushbuttons, by performing the following steps:

1. Press BAND to select FM1 or FM2.
2. Press PROG TYPE to activate program type select mode. The PTY symbol will appear on the display.
3. Turn the SELECT knob to select a PTY.
4. Press and hold one of the six numbered pushbuttons until you hear a beep. Whenever that numbered pushbutton is pressed, the PTY that was set will return, if program type select mode is on.
5. Repeat the steps for each pushbutton.

RDS Messages

ALERT!: Alert warns of local or national emergencies. When an alert announcement comes on the current radio station, ALERT! will appear on the display. You will hear the announcement, even if the volume is low or a CD is playing. If a CD is playing, play will stop during the announcement. Alert announcements cannot be turned off.

ALERT! will not be affected by tests of the emergency broadcast system. This feature is not supported by all RDS stations.

Downloaded from www.Manualslib.com manuals search engine

INFO (Information): If the current station has a message, INFO will appear on the display. Press this button to see the message. The message may display the artist, song title, call in phone numbers, etc.

If the entire message is not displayed, parts of the message will appear every three seconds. To scroll through the message, press and release the INFO button. A new group of words will appear on the display after every press of the button. Once the complete message has been displayed, INFO will disappear from the display until another new message is received. The last message can be displayed by pressing the INFO button. You can view the last message until a new message is received or a different station is tuned to.

TRAF (Traffic): If TRAF appears on the display, the tuned station broadcasts traffic announcements. Press this button to receive the traffic announcement from the station and brackets will be displayed around TRAF. When a traffic announcement comes on the tuned radio station you will hear it.

If the station does not broadcast traffic announcements, press the TRAF button and the radio will seek to a station that does. When a station that broadcasts traffic announcements is found, the radio will stop seeking and brackets will be displayed around TRAF. If no station is found that broadcasts traffic announcements, NO TRAFFIC will appear on the display.

If the brackets are on the display and TRAF is not, press the TRAF button to remove the brackets or use the TUNE knob or the SEEK arrows to go to a station that broadcasts traffic announcements. If no station is found that broadcasts traffic announcements, NO TRAFFIC will appear on the display.

The radio will play the traffic announcement if the volume is low. The radio will interrupt the play of a CD if the last tuned station broadcasts traffic announcements and the brackets are displayed.

This function does not apply to XM™ Satellite Radio Service.

Radio Messages

CALIBRATE: The audio system has been calibrated for your vehicle from the factory. If CALIBRATE appears on the display, it means that the radio has not been configured properly for the vehicle and must be returned to your GM dealer for service.

LOCKED: This message is displayed when the THEFTLOCK® system has locked up. Take the vehicle to your GM dealer for service.

If any error occurs repeatedly or if an error cannot be corrected, contact your GM dealer.

Downloaded from www.Manualslib.com manuals search engine

XM™ Radio Messages

Radio Display Message	Condition	Action Required
XL (Explicit Language Channels)	XL on the radio display, after the channel name, indicates content with explicit language.	These channels, or any others, can be blocked at a customer's request, by calling 1-800-852-XMXM (9696).
Updating	Updating encryption code	The encryption code in the receiver is being updated, and no action is required. This process should take no longer than 30 seconds.
No Signal	Loss of signal	The system is functioning correctly, but the vehicle is in a location that is blocking the XM signal. When you move into an open area, the signal should return.
Loading XM	Acquiring channel audio (after 4 second delay)	The audio system is acquiring and processing audio and text data. No action is needed. This message should disappear shortly.
CH Off Air	Channel not in service	This channel is not currently in service. Tune to another channel.
CH Unavail	Channel no longer available	This previously assigned channel is no longer assigned. Tune to another station. If this station was one of the presets, choose another station for that preset button.
No Info	Artist Name/Feature not available	No artist information is available at this time on this channel. The system is working properly.
No Info	Song/Program Title not available	No song title information is available at this time on this channel. The system is working properly.

Downloaded from www.Manualslib.com manuals search engine

XM™ Radio Messages (cont'd)

Radio Display Message	Condition	Action Required
No Info	Category Name not available	No category information is available at this time on this channel. The system is working properly.
No Info	No Text/Informational message available	No text or informational messages are available at this time on this channel. The system is working properly.
Not Found	No channel available for the chosen category	There are no channels available for the selected category. The system is working properly.
XM Locked	Theft lock active	The XM receiver in the vehicle may have previously been in another vehicle. For security purposes, XM receivers cannot be swapped between vehicles. If this message is received, after having your vehicle serviced, check with your GM dealer.
Radio ID	Radio ID label (channel 0)	If tuned to channel 0, this message will alternate with the XM Radio 8 digit radio ID label. This label is needed to activate the service.
Unknown	Radio ID not known (should only be if hardware failure)	If this message is received when tuned to channel 0, there may be a receiver fault. Consult with your GM dealer.
Chk XMRcvr	Hardware failure	If this message does not clear within a short period of time, the receiver may have a fault. Consult with your GM dealer.

Downloaded from www.Manualslib.com manuals search engine

Playing a CD

Insert a CD partway into the slot, label side up. The player will pull it in and the CD should begin playing. If you want to insert a CD when the ignition is off, first press the eject symbol or push the RCL knob. If you insert a CD with the radio off and the ignition on, it will start to play.

If the ignition or radio is turned off with a CD in the player, it will stay in the player. When the ignition or radio is turned on, the CD will start playing where it stopped, if it was the last selected audio source.

When the CD is inserted, the CD symbol will appear on the display. As each new track starts to play, the track number will appear on the display.

The CD player can play the smaller 3 inch (8 cm) single CDs with an adapter ring. Full-size CDs and the smaller CDs are loaded in the same manner.

If playing a CD-R the sound quality may be reduced due to CD-R quality, the method of recording, the quality of the music that has been recorded, and the way the CD-R has been handled. There may be an increase in skipping, difficulty in finding tracks, and/or difficulty in loading and ejecting. If these problems occur try a known good CD.

Do not add paper labels to CDs, they could get caught in the CD player.

If an error appears on the display, see “CD Messages” later in this section.

▷▷ **1 (Forward):** Press and hold this pushbutton to advance quickly within a track. You will hear sound at a reduced volume. Release the pushbutton to play the passage. The elapsed time of the track will appear on the display.

▽△ **2:** This pushbutton is inoperable on this radio.

RDM 3 (Random): Press this pushbutton to hear the tracks in random, rather than sequential, order. RDM and the track number will appear on the display. Press RDM again to turn off random play.

4◁◁ (Reverse): Press and hold this pushbutton to reverse quickly within a track. You will hear sound at a reduced volume. Release the pushbutton to play the passage. The elapsed time of the track will appear on the display.

EQ (Equalizer): Press EQ to select an equalization setting while playing a CD. The equalization will be set whenever a CD is played. See “EQ” listed previously for more information. If you select an EQ setting for your CD, it will be activated each time you play a CD.

△ **SEEK** ▽**:** Press the down arrow to go to the start of the current track, if more than eight seconds have played. Press the up arrow to go to the next track.

Downloaded from www.Manualslib.com manuals search engine

If either arrow is held or pressed more than once, the player will continue moving backward or forward through the CD.

△ **SCAN** ▽**:** Press and hold either arrow for more than two seconds until SCAN and the track number appear on the display and you hear a beep. The CD will go to the next track, play for a few seconds, then go on to the next track. Press either arrow again to stop scanning.

RCL (Recall): Push this knob to see how long the current track has been playing. To change the default on the display, track and elapsed time, push the knob until you see the display you want, then hold the knob until the display flashes. The selected display will now be the default. While elapsed time is showing, CD TIME will appear on the display.

BAND: Press this button to listen to the radio when a CD is playing. The inactive CD will remain safely inside the radio for future listening.

CD AUX (Auxiliary): Press this button to play a CD when listening to the radio. The CD symbol will appear on the display when a CD is loaded.

⏏ **(Eject):** Press this button to eject a CD. Eject may be activated with either the ignition or radio off. CDs may be loaded with the ignition and radio off if this button is pressed first.

CD Messages

CHECK CD: If this message appears on the display and/or the CD comes out, it could be for one of the following reasons:

- It is very hot. When the temperature returns to normal, the CD should play.
- You are driving on a very rough road. When the road becomes smoother, the CD should play.
- The CD is dirty, scratched, wet, or upside down.
- The air is very humid. If so, wait about an hour and try again.
- There may have been a problem while burning the CD.
- The label may be caught in the CD player.

If the CD is not playing correctly, for any other reason, try a known good CD.

If any error occurs repeatedly or if an error cannot be corrected, contact your GM dealer. If the radio displays an error message, write it down and provide it to your GM dealer when reporting the problem.

Downloaded from www.Manualslib.com manuals search engine

Radio with CD (MP3)

Radio Data System (RDS)

The audio system has a Radio Data System (RDS). RDS features are available for use only on FM stations that broadcast RDS information.

With RDS, the radio can do the following:

- Seek to stations broadcasting the selected type of programming
- Receive announcements concerning local and national emergencies
- Display messages from radio stations
- Seek to stations with traffic announcements

This system relies upon receiving specific information from these stations and will only work when the information is available. In rare cases, a radio station may broadcast incorrect information that will cause the radio features to work improperly. If this happens, contact the radio station.

While the radio is tuned to an RDS station, the station name or call letters will appear on the display instead of the frequency. RDS stations may also provide the time of day, a program type (PTY) for current programming, and the name of the program being broadcast.

XM™ Satellite Radio Service

XM™ is a satellite radio service that is based in the 48 contiguous United States. XM™ offers 100 coast to coast channels including music, news, sports, talk, and children's programming. XM™ provides digital quality audio and text information that includes song title and artist name. A service fee is required in order to receive the XM™ service. For more information, contact XM™ at www.xmradio.com or call 1-800-852-XMXM (9696).

Downloaded from www.Manualslib.com manuals search engine

Playing the Radio

PWR (Power): Push this knob to turn the system on and off.

VOL (Volume): Turn this knob to increase or to decrease the volume.

RCL (Recall): Push this knob to switch the display between the radio station frequency and the time. When the ignition is off, push this knob to display the time.

For RDS, push the RCL knob to change what appears on the display while using RDS. The display options are station name, RDS station frequency, PTY, and the name of the program (if available).

For XM™ (if equipped), push the RCL knob while in XM™ mode to retrieve four different categories of information related to the current song or channel: Artist, Song Title, Category or PTY, Channel Number/Channel Name.

To change the default on the display, push the RCL knob until you see the display you want, then hold the knob until the display flashes. The selected display will now be the default.

SCV (Speed-Compensated Volume): With SCV, the audio system adjusts automatically to make up for road and wind noise as you drive.

Set the volume at the desired level. Press this button to select MIN, MED, or MAX. Each higher setting allows for more volume compensation at faster vehicle speeds. Then, as you drive, SCV automatically increases the volume, as necessary, to overcome noise at any speed. The volume level should always sound the same to you as you drive. To turn SCV off, press this button until OFF appears on the display.

Finding a Station

BAND: Press this button to switch between FM1, FM2, AM, or XM1 or XM2 (if equipped). The display will show the selection.

TUNE: Turn this knob to select radio stations.

△ **SEEK** ▽**:** Press the up or the down arrow to go to the next or to the previous station and stay there.

The radio will only seek stations with a strong signal that are in the selected band.

Downloaded from www.Manualslib.com manuals search engine

△ **SCAN** ▽**:** Press and hold either SCAN arrow for two seconds until SCAN appears on the display and you hear a beep. The radio will go to a station, play for a few seconds, then go on to the next station. Press either SCAN arrow again to stop scanning.

To scan preset stations, press and hold either SCAN arrow for more than four seconds until PSCAN and the preset number appear on the display. You will hear a double beep. The radio will go to the first preset station stored on the pushbuttons, play for a few seconds, then go on to the next preset station. Press either SCAN arrow again to stop scanning presets.

The radio will only scan stations with a strong signal that are in the selected band.

Setting Preset Stations

Up to 30 stations (six FM1, six FM2, and six AM, six XM1 and six XM2 (if equipped)), can be programmed on the six numbered pushbuttons, by performing the following steps:

1. Turn the radio on.
2. Press BAND to select FM1, FM2, AM, or XM1 or XM2.
3. Tune in the desired station.
4. Press EQ to select the equalization.
5. Press and hold one of the six numbered pushbuttons until you hear a beep. Whenever that numbered pushbutton is pressed, the station that was set will return and the equalization that was selected will be stored for that pushbutton.
6. Repeat the steps for each pushbutton.

Setting the Tone (Bass/Treble)

TONE: Press and release this button until BASS, MID, or TREB appears on the display. The SELECT LED indicator will light to show that the tone control can be adjusted. Turn the SELECT knob to increase or to decrease. If a station is weak or noisy, decrease the treble.

To return all of the tone controls to the middle position, press and hold the TONE button until FLAT appears on the display.

EQ (Equalizer): Press this button to select customized equalization settings.

Up to six customized equalization settings can be programmed, by performing the following steps:

1. Turn the radio on.
2. Use the TONE button and the SELECT knob to create the equalization.

Downloaded from www.Manualslib.com manuals search engine

3. Press and hold the EQ button for two seconds. SELECT EQ # will appear on the display and the EQ symbol will flash.
4. Press EQ or turn the SELECT knob to select the EQ number.
5. Press and hold the EQ button or push the SELECT knob to store the equalization setting and the number. EQ SAVED will appear on the display and you will hear a beep.
6. Repeat the steps for the other EQ settings and numbers.

EQ 5 has been programmed at the factory for use with talk radio, but it can be set to a different tone.

Adjusting the Speakers (Balance/Fade)

BAL (Balance): To adjust the balance between the right and the left speakers, press and release this button until BAL appears on the display. The SELECT LED indicator will light to show that the speakers can be adjusted. Turn the SELECT knob to move the sound toward the right or the left speakers.

FADE: To adjust the fade between the front and the rear speakers, press and release this button until FADE appears on the display. The SELECT LED indicator will light to show that the speakers can be adjusted. Turn the SELECT knob to move the sound toward the front or the rear speakers.

To return all of the speaker settings to the middle position, press and hold the BAL FADE button for two seconds.

Finding a Program Type (PTY) Station (RDS and XM™)

To select and find a desired PTY perform the following:

1. Press PROG TYPE to activate program type select mode. The PTY symbol will appear on the display.
2. Turn the SELECT knob to select a PTY.
3. Once the PTY is displayed, press either SEEK arrow to select the PTY and take you to the PTY's first station.
4. To go to another station within that PTY and the PTY is displayed, press either SEEK arrow once. If the PTY is not displayed, press either SEEK arrow twice to display the PTY and then to go to another station.
5. Press PROG TYPE to exit program type select mode.

   If PTY times out and is no longer on the display, go back to Step 1.

If both PTY and TRAF are on, the radio will search for stations with the selected PTY and traffic announcements.

Downloaded from www.Manualslib.com manuals search engine

△ **SCAN** ▽**:** Scan the stations within a PTY by performing the following:

1. Press PROG TYPE to activate program type select mode. The PTY symbol will appear on the display.
2. Turn the SELECT knob to select a PTY.
3. Once the desired PTY is displayed, press and hold either SCAN arrow, and the radio will begin scanning the stations in the PTY.
4. Press either SCAN arrow to stop at a station.

If both PTY and TRAF are on, the radio will scan for stations with the selected PTY and traffic announcements.

BAND (Alternate Frequency): Alternate frequency allows the radio to switch to a stronger station with the same program type. To turn alternate frequency on press and hold BAND for two seconds. AF ON will appear on the display. The radio may switch to stations with a stronger frequency.

To turn alternate frequency off, press and hold BAND again for two seconds. AF OFF will appear on the display. The radio will not switch to other stations.

This function does not apply for XM™ Satellite Radio Service.

Setting Preset PTYs (RDS Only)

These pushbuttons have factory PTY presets. Up to 12 PTYs (six FM1 and six FM2), can be programmed on the six numbered pushbuttons, by performing the following steps:

1. Press BAND to select FM1 or FM2.
2. Press PROG TYPE to activate program type select mode. The PTY symbol will appear on the display.
3. Turn the SELECT knob to select a PTY.
4. Press and hold one of the six numbered pushbuttons until you hear a beep. Whenever that numbered pushbutton is pressed, the PTY that was set will return, if program type select mode is activated.
5. Repeat the steps for each pushbutton.

RDS Messages

ALERT!: Alert warns of local or national emergencies. When an alert announcement comes on the current radio station, ALERT! will appear on the display. You will hear the announcement, even if the volume is low or a CD is playing. If a CD is playing, play will stop during the announcement. Alert announcements cannot be turned off.

Downloaded from www.Manualslib.com manuals search engine

ALERT! will not be affected by tests of the emergency broadcast system. This feature is not supported by all RDS stations.

INFO (Information): If the current station has a message, INFO will appear on the display. Press this button to see the message. The message may display the artist, song title, call in phone numbers, etc.

If the entire message is not displayed, parts of the message will appear every three seconds. To scroll through the message, press and release the INFO button. A new group of words will appear on the display after every press of the button. Once the complete message has been displayed, INFO will disappear from the display until another new message is received. The last message can be displayed by pressing the INFO button. You can view the last message until a new message is received or a different station is tuned to.

TRAF (Traffic): If TRAF appears on the display, the tuned station broadcasts traffic announcements. To receive the traffic announcement from the tuned station, press this button. Brackets will be displayed around TRAF and when a traffic announcement comes on the tuned radio station you will hear it.

If the station does not broadcast traffic announcements, press the TRAF button and the radio will seek to a station that does. When a station that broadcasts traffic announcements is found, the radio will stop seeking and brackets will be displayed around TRAF. If no station is found that broadcasts traffic announcements, NO TRAFFIC will appear on the display.

If the brackets are on the display and TRAF is not, press the TRAF button to remove the brackets or use the TUNE knob or the SEEK arrows to go to a station that supports traffic announcements. If no station is found that broadcasts traffic announcements, NO TRAFFIC will appear on the display.

The radio will play the traffic announcement if the volume is low. The radio will interrupt the play of a CD if the last tuned station broadcasts traffic announcements and the brackets are displayed.

This function does not apply to XM™ Satellite Radio Service.

Radio Messages

CALIBRATE: The audio system has been calibrated for your vehicle from the factory. If CALIBRATE appears on the display, it means that the radio has not been configured properly for your vehicle and must be returned to your GM dealer for service.

Downloaded from www.Manualslib.com manuals search engine

XM™ Radio Messages

Radio Display Message	Condition	Action Required
XL (Explicit Language Channels)	XL on the radio display, after the channel name, indicates content with explicit language.	These channels, or any others, can be blocked at a customer's request, by calling 1-800-852-XMXM (9696).
Updating	Updating encryption code	The encryption code in the receiver is being updated, and no action is required. This process should take no longer than 30 seconds.
No Signal	Loss of signal	The system is functioning correctly, but the vehicle is in a location that is blocking the XM signal. When the vehicle is moved into an open area, the signal should return.
Loading XM	Acquiring channel audio (after 4 second delay)	The audio system is acquiring and processing audio and text data. No action is needed. This message should disappear shortly.
CH Off Air	Channel not in service	This channel is not currently in service. Tune to another channel.
CH Unavail	Channel no longer available	This previously assigned channel is no longer assigned. Tune to another station. If this station was one of the presets, choose another station for that preset button.
No Info	Artist Name/Feature not available	No artist information is available at this time on this channel. The system is working properly.
No Info	Song/Program Title not available	No song title information is available at this time on this channel. The system is working properly.

Downloaded from www.Manualslib.com manuals search engine

XM™ Radio Messages (cont'd)

Radio Display Message	Condition	Action Required
No Info	Category Name not available	No category information is available at this time on this channel. The system is working properly.
No Info	No Text/Informational message available	No text or informational messages are available at this time on this channel. The system is working properly.
Not Found	No channel available for the chosen category	There are no channels available for the selected category. The system is working properly.
XM Locked	Theft lock active	The XM receiver in your vehicle may have previously been in another vehicle. For security purposes, XM receivers cannot be swapped between vehicles. If this message is received after having your vehicle serviced, check with your GM dealer.
Radio ID	Radio ID label (channel 0)	If tuned to channel 0, this message will alternate with the XM Radio 8 digit radio ID label. This label is needed to activate the service.
Unknown	Radio ID not known (should only be if hardware failure)	If this message is received when tuned to channel 0, there may be a receiver fault. Consult with your GM dealer.
Chk XMRcvr	Hardware failure	If this message does not clear within a short period of time, the receiver may have a fault. Consult with your GM dealer.

Downloaded from www.Manualslib.com manuals search engine

Playing a CD

Insert a CD partway into the slot, label side up. The player will pull it in and the CD should begin playing. If you want to insert a CD with the ignition off, first press the EJECT button or push the RCL knob. If you insert a CD with the radio off and the ignition on, it will start to play.

If the ignition or radio is turned off with a CD in the player, it will stay in the player. When the ignition or the radio is turned on, the CD will start playing, where it stopped, if it was the last selected audio source.

READING DISC and the CD symbol will appear on the display, when a CD is loaded. The track number will appear on the display, as each new track starts to play.

The CD player can play the smaller 3 inch (8 cm) single CDs with an adapter ring. Full-size CDs and the smaller CDs are loaded in the same manner.

If playing a CD-R the sound quality may be reduced due to CD-R quality, the method of recording, the quality of the music that has been recorded, and the way the CD-R has been handled. There may be an increase in skipping, difficulty in finding tracks, and/or difficulty in loading and ejecting. If these problems occur try a known good CD.

Do not add paper labels to CDs, they could get caught in the CD player.

If an error appears on the display, see “CD Messages” later in this section.

▷▷ **1 (Forward):** Press and hold this pushbutton to advance quickly within a track. You will hear sound at a reduced volume. Release this pushbutton to play the passage. The elapsed time of the track will appear on the display.

RDM 2 (Random): Press this pushbutton to hear the tracks in random, rather than sequential, order. RDM and the track number will appear on the display. Press RDM again to turn off random play.

3 (Next Folder): This button does not have a function for non-MP3 CDs.

4 ◁◁ (Reverse): Press and hold this pushbutton to reverse quickly within a track. You will hear sound at a reduced volume. Release this pushbutton to play the passage. The elapsed time of the track will appear on the display.

6 (Previous Folder): This button does not have a function for non-MP3 CDs.

EQ (Equalizer): Press EQ to select the customized equalization setting while playing a CD. The equalization will be automatically set whenever a CD is played. See “EQ” listed previously for more information.

Downloaded from www.Manualslib.com manuals search engine

△ **SEEK** ▽**:** Press the up arrow to go to the start of the next track. Press the down arrow to go to the start of the previous track. Pressing either arrow for more than two seconds will search the previous or next tracks at two tracks per second. Release the button to stop searching and to play the track.

△ **SCAN** ▽**:** Press and hold either arrow for more than two seconds until SCAN and the track number appear on the display and you hear a beep. The CD will go to the next track, play for a few seconds, then go on to the next track. Press either arrow again to stop scanning.

RCL (Recall): Push this knob to see how long the current track has been playing. To change the default on the display, track and elapsed time, push the knob until you see the display you want, then hold the knob until the display flashes. The selected display will now be the default. While elapsed time is showing, CD TIME will appear on the display.

BAND: Press this button to listen to the radio when a CD is playing. The inactive CD will remain safely inside the radio for future listening.

CD AUX (Auxiliary): Press this button to play a CD when listening to the radio. The CD symbol will appear on the display when a CD is loaded.

EJECT: Press this button to eject a CD. Eject may be activated with either the ignition or radio off. CDs may be loaded with the ignition and radio off if this button is pressed first.

Using an MP3 CD

MP3 Format

This MP3 player will accept MP3 files that were recorded on and up to 700 MB CD-R CD. The files can be recorded with the following fixed bit rates: 32 kbps, 40 kpbs, 56 kpbs, 64 kpbs, 80 kpbs, 96 kpbs, 112 kpbs, 128 kpbs, 160 kpbs, 192 kpbs, 224 kpbs, 256 kpbs and 320 kpbs or a variable bit rate. Song title, artist name, and album will be available when recorded using ID3 tags versions 1 and 2.

The player will be able to read and play a maximum of 50 folders, 50 playlists, 10 sessions, and 255 files. Long file, folder, or playlist names or a combination of a large number of files and folders or playlists may cause the player to be unable to play up to the maximum number of files, folders, playlists, or sessions. If you wish to play large numbers of files, folders, playlists, or sessions minimize the length of the file, folder, or playlist name. You can also play an MP3 CD that was recorded using no file folders. The system can support up to 11 folders in depth, though, keep the depth of the folders to a minimum in order to keep down the complexity and confusion in trying to locate a particular folder during playback.

Downloaded from www.Manualslib.com manuals search engine

If a CD contains more than the maximum of 50 folders, 50 playlists, 10 sessions, and 255 files the player will let you access and navigate up to the maximum, but all items over the maximum will be ignored.

Root Directory

The root directory will be treated as a folder. If the root directory has compressed audio files, the directory will be displayed as F1 ROOT. All files contained directly under the root directory will be accessed prior to any root directory folders. However, playlists (Px) will always be accessed before root folders or files.

Empty Directory or Folder

If a root directory or a folder exists somewhere in the file structure that contains only folders/subfolders and no compressed files directly beneath them, the player will advance to the next folder in the file structure that contains compressed audio files and the empty folder will not be displayed or numbered.

No Folder

When the CD contains only compressed files, the files will be located under the root folder. The next and previous folder functions will have no function on a CD that was recorded without folders or playlists. When displaying the name of the folder the radio will display ROOT.

When the CD contains only playlists and compressed audio files, but no folders, all files will be located under the root folder. The folder down and the folder up buttons will search playlists (Px) first and then go to the root folder. When the radio displays the name of the folder the radio will display ROOT.

Order of Play

Tracks will be played in the following order:

- Play will begin from the first track in the first playlist and will continue sequentially through all tracks in each playlist. When the last track of the last playlist has been played, play will continue from the first track of the first playlist.
- If the CD does not contain any playlists, then play will begin from the first track under the root directory. When all tracks from the root directory have been played, play will continue from files according to their numerical listing. After playing the last track from the last folder, play will begin again at the first track of the first folder or root directory.

When play enters a new folder, the display will not automatically show the new folder name unless you have chosen the folder mode as the default display, see RCL later in this section. The new track name will appear on the display.

Downloaded from www.Manualslib.com manuals search engine

File System and Naming

The song name that will be displayed will be the song name that is contained in the ID3 tag. If the song name is not present in the ID3 tag, then the radio will display the file name without the extension (such as .mp3) as the track name.

Track names longer than 32 characters or 4 pages will be shortened. The display will not show parts of words on the last page of text and the extension of the filename will not be displayed.

Preprogrammed Playlists

You can access preprogrammed playlists which were created by WinAmp™, MusicMatch™, or Real Jukebox™ software, however, you will not have editing capability. These playlists will be treated as special folders containing compressed audio song files.

Playing a MP3

Insert a CD partway into the slot, label side up. The player will pull it in and the CD will begin to play after the player has read the table of contents and the file structure and determined where the first playable track is located. READING DISC will appear on the display. After the MP3 has been read, the number of folders and tracks will appear on the display, then the radio will go back to the default display. The CD symbol will appear on the display. If you want to insert an MP3 with the ignition off, first press the EJECT button or push the RCL knob. If you insert a CD with the radio off and the ignition on, it will start to play.

If the ignition or the radio is turned off with a CD in the player, it will stay in the player. When the ignition or the radio is turned on, the CD will start playing, where it stopped, if it was the last selected audio source.

The track number will appear on the display, as each new track starts to play.

The CD player can play the smaller 3 inch (8 cm) single CDs with an adapter ring. Full-size CDs and the smaller CDs are loaded in the same manner.

If playing a CD-R the sound quality may be reduced due to CD-R quality, the method of recording, the quality of the music that has been recorded, and the way the CD-R has been handled. There may be an increase in skipping, difficulty in finding tracks, and/or difficulty in loading and ejecting. If these problems occur try a known good CD.

Do not add paper labels to CDs, they could get caught in the CD player.

If an error appears on the display, see “CD Messages” later in this section.

Downloaded from www.Manualslib.com manuals search engine

▷▷ **1 (Forward):** Press and hold this pushbutton to advance quickly within a track. Press and hold this pushbutton for less than two seconds to advance at 10 times the normal playing speed. Press and hold it for more than two seconds to advance at 20 times the normal playing speed. Release the pushbutton to play the passage. FWD and the elapsed time of the track will appear on the display.

RDM 2 (Random): To repeat the tracks in the current folder or playlist, press and release this pushbutton. FOLDER RANDOM will appear on the display. Once all of the tracks in the current folder or playlist have been played the system will move on to the next folder or playlist and play all of the tracks in random order.

To repeat the tracks on the CD, press and hold this pushbutton for two seconds. You will hear a beep and DISC RANDOM will appear on the display. This feature will not work with playlists.

When in random, pressing and releasing either SEEK arrow will take you to the next or previous random track.

Press and release this pushbutton again to turn off random play. NO RANDOM will appear on the display.

3 (Next Folder): Press this pushbutton to go to the first track in the next folder or playlist. If the disc contains playlists, it will go through the playlist, then the folders. Pressing this button while in folder random mode will take you to the next folder and random the tracks in that folder. This function will not work on a CD that does not contain folders or playlists.

4 ◁◁ (Reverse): Press and hold this pushbutton to reverse quickly within a track. Press and hold this pushbutton for less than two seconds to reverse at 10 times the normal playing speed. Press and hold it for more than two seconds to reverse at 20 times the normal playing speed. Release the pushbutton to play the passage. REV and the elapsed time of the track will appear on the display. If this button is pressed for more than 20 seconds, the radio will stop reversing and begin to play.

6 (Previous Folder): Press this pushbutton to go to the first track in the previous folder or playlist. If the disc contains playlists, it will go through the playlist, then the folders. Pressing this button while in folder random mode will take you to the previous folder and random the tracks in that folder. This function will not work on a CD that does not contain folders or playlists.

Downloaded from www.Manualslib.com manuals search engine

△ **SEEK** ▽**:** Press the up arrow to go to the start of the next track. Press the down arrow to go to the start of the previous track. Pressing either arrow for more than two seconds will search the previous or next tracks at two tracks per second. Release the button to stop searching and to play the track.

TUNE: Turn this knob to fast track reverse or advance through tracks in all folders or playlists. The track number and file name will appear on the display for each track. Turn this knob while in random to fast track reverse or advance the tracks in sequential order.

RCL (Recall): Push this knob to switch between track mode, folder/playlist mode, and time of day mode. The display will show only 13 characters, but there can be up to three pages of text. If there are more than 13 characters in the song, folder, or playlist name, pushing this knob within two seconds will take you to the next page of text. If there are no other pages to be shown, pushing this knob within two seconds will take you to the next display mode.

- Track will display the current track number and the ID3 tag song name.
- Folder/playlist will display the current folder or playlist number and the folder/playlist name.
- Time of day will display the time of day and the ID3 tag song name.

To change the default on the display, push this knob until you see the display you want, then hold this knob for two seconds. The radio will produce one beep and the selected display will now be the default.

INFO (Information): INFO will appear on the display whenever a current track has ID3 tag information. Press this button to display the artist name and album contained in the tag. INFO will disappear from the display when the information in the ID3 tag has finished.

BAND: Press this button to listen to the radio when a CD is playing. The inactive CD will remain safely inside the radio for future listening.

CD AUX (Auxiliary): Press this button to play a CD when listening to the radio. The CD symbol will appear on the display when a CD is loaded.

EJECT: Press this button to eject a CD. Eject may be activated with either the ignition or radio off. CDs may be loaded with the ignition and radio off if this button is pressed first.

Downloaded from www.Manualslib.com manuals search engine

CD Messages

CHECK CD: If this message appears on the display and/or the CD comes out, it could be for one of the following reasons:

- It is very hot. When the temperature returns to normal, the CD should play.
- You are driving on a very rough road. When the road becomes smoother, the CD should play.
- The CD is dirty, scratched, wet, or upside down.
- The air is very humid. If so, wait about an hour and try again.
- The format of the CD may not be compatible. See “MP3 Format” earlier in this section.
- There may have been a problem while burning the CD.
- The label may be caught in the CD player.

If the CD is not playing correctly, for any other reason, try a known good CD.

If any error occurs repeatedly or if an error cannot be corrected, contact your GM dealer. If the radio displays an error message, write it down and provide it to your GM dealer when reporting the problem.

Radio with Cassette and CD

Playing the Radio

PWR (Power): Push this knob to turn the system on and off.

VOL (Volume): Turn this knob to increase or to decrease the volume.

RCL (Recall): Push this knob to switch the display between the radio station frequency and the time. When the ignition is off, push this knob to display the time.

To change the default on the display, push the RCL knob until you see the display you want, then hold the knob until the display flashes. The selected display will now be the default.

Downloaded from www.Manualslib.com manuals search engine

SCV (Speed-Compensated Volume): With SCV, the audio system adjusts automatically to make up for road and wind noise as you drive by increasing the volume as vehicle speed increases.

Set the volume at the desired level. Press this button to select MIN, MED or MAX. Each higher setting will provide more volume compensation at faster vehicle speeds. To turn SCV off, press this button until OFF appears on the display.

Finding a Station

BAND: Press this button to switch between FM1, FM2, or AM. The display will show the selection.

TUNE: Turn this knob to select radio stations.

△ **SEEK** ▽**:** Press the up or the down arrow to go to the next or to the previous station and stay there.

The radio will only seek stations with a strong signal that are in the selected band.

△ **SCAN** ▽**:** Press and hold either arrow for two seconds until SCAN appears on the display and you hear a beep. The radio will go to a station, play for a few seconds, then go on to the next station. Press either arrow again to stop scanning.

To scan preset stations, press and hold either SCAN arrow for more than four seconds until PSCAN and the preset number appears on the display and you will hear two beeps. The radio will go to the first preset station, play for a few seconds, then go on to the next preset station. Press either SCAN arrow again or one of the pushbuttons to stop scanning presets.

The radio will only scan stations with a strong signal that are in the selected band.

Setting Preset Stations

Up to 30 stations (six FM1, six FM2, and six AM), can be programmed on the six numbered pushbuttons, by performing the following steps:

1. Turn the radio on.
2. Press BAND to select FM1, FM2, or AM.
3. Tune in the desired station.
4. Press EQ to select the equalization.
5. Press and hold one of the six numbered pushbuttons until you hear a beep. Whenever that numbered pushbutton is pressed, the station that was set will return and the equalization that was selected will be stored for that pushbutton.
6. Repeat the steps for each pushbutton.

Downloaded from www.Manualslib.com manuals search engine

Setting the Tone (Bass/Treble)

TONE: Press and release this button until BASS, MID or TREB appears on the display. The SELECT LED indicator will light to show that the tone control can be adjusted. Turn the SELECT knob to increase or to decrease. If a station is weak or noisy, decrease the treble.

To adjust all of the tone controls to the middle position, press and hold TONE until FLAT appears on the display.

EQ (Equalizer): Press this button to select customized equalization settings.

Up to six customized equalization settings, can be programmed, by performing the following steps:

1. Turn the radio on.
2. Use the TONE button and the SELECT knob to create the desired equalization.
3. Press and hold the EQ button for two seconds. SELECT EQ # will appear on the display and the EQ symbol will flash.
4. Press the EQ button or turn the SELECT knob to select the desired EQ setting number.
5. Press and hold the EQ button or push the SELECT knob to store the equalization setting and the number. EQ SAVED will appear on the display and you will hear a beep.
6. Repeat the steps for the other EQ settings and numbers.

EQ 5 has been programmed at the factory for use with talk radio, but it can be set to a different tone.

Adjusting the Speakers (Balance/Fade)

BAL (Balance): Press and release this button until BAL appears on the display. The SELECT LED indicator will light to show that the balance can be adjusted. Turn the SELECT knob to move the sound toward the left or the right speakers.

FADE: Press and release this button until FADE appears on the display. The SELECT LED indicator will light to show that the fade can be adjusted. Turn the SELECT knob to move the sound toward the front or the rear speakers.

To adjust the balance and fade to the middle position, press and hold TONE until FLAT appears on the display.

Downloaded from www.Manualslib.com manuals search engine

Radio Data System (RDS)

The audio system has a Radio Data System (RDS). RDS features are available for use only on FM stations that broadcast RDS information.

With RDS, the radio can do the following:

- Seek to stations broadcasting the selected type of programming
- Receive announcements concerning local and national emergencies
- Display messages from radio stations
- Seek to stations with traffic announcements.

This system relies upon receiving specific information from these stations and will only work when the information is available. In rare cases, a radio station may broadcast incorrect information that will cause the radio features to work improperly. If this happens, contact the radio station.

While the radio is tuned to an RDS station, the station name or call letters will appear on the display instead of the frequency. RDS stations may also provide the time of day, a program type (PTY) for current programming, and the name of the program being broadcast.

Finding a Program Type (PTY) Station

To select and find a desired PTY perform the following:

1. Press the PROG TYPE button to activate program type select mode. The PTY symbol will appear on the display.
2. Turn the SELECT knob to select a PTY.
3. Once the desired PTY is displayed, press and release either SEEK arrow to select and to take you to the PTY's first station.
4. To go to another station within that PTY and the PTY is displayed, press either SEEK arrow once. If the PTY is not displayed, press either SEEK arrow twice to display the PTY and then to go to another station.
5. Press the PROG TYPE button to exit program type select mode.

   If PTY times out and is no longer on the display, go back to Step 1.

Downloaded from www.Manualslib.com manuals search engine

SCAN: Scan the stations within a PTY by performing the following:

1. Press the PROG TYPE button to activate program type select mode. The PTY symbol will appear on the display.
2. Turn the SELECT knob to select a PTY.
3. Once the desired PTY is displayed, press and hold either SCAN arrow, and the radio will begin scanning the stations in the PTY.
4. Press either SCAN arrow again to stop at a station.

BAND (Alternate Frequency): Alternate frequency allows the radio to switch to a stronger station with the same program type. To turn alternate frequency on, press and hold BAND for two seconds. AF ON will appear on the display. The radio may switch to stations with a stronger frequency.

To turn alternate frequency off, press and hold BAND again for two seconds. AF OFF will appear on the display. The radio will not switch to other stations.

Setting Preset PTYs

These buttons have factory PTY presets. Up to 12 PTYs (six FM1 and six FM2), can be programmed on the six numbered pushbuttons, by performing the following steps:

1. Press BAND to select FM1 or FM2.
2. Press the PROG TYPE button to activate program type select mode. The PTY symbol will appear on the display.
3. Turn the SELECT knob to select a PTY.
4. Press and hold one of the six numbered pushbuttons until you hear a beep. Whenever that numbered pushbutton is pressed, the PTY that was set will return.
5. Repeat the steps for each pushbutton.

Downloaded from www.Manualslib.com manuals search engine

RDS Messages

ALERT!: Alert warns of local or national emergencies. When an alert announcement comes on the current radio station, ALERT! will appear on the display. You will hear the announcement, even if the volume is low or a cassette tape or a CD is playing. If a cassette tape or CD is playing, play will stop during the announcement. Alert announcements cannot be turned off.

ALERT! will not be affected by tests of the emergency broadcast system. This feature is not supported by all RDS stations.

INFO (Information): If the current station has a message, INFO will appear on the display. Press this button to see the message. The message may display the artist, song title, call in phone numbers, etc.

If the entire message is not displayed, parts of the message will appear every three seconds. To scroll through the message, press and release the INFO button. A new group of words will appear on the display after every press of this button. Once the complete message has been displayed, INFO will disappear from the display until another new message is received. The last message can be displayed by pressing the INFO button. You can view the last message until a new message is received or a different station is tuned to.

TRAF (Traffic): If TRAF appears on the display, the tuned station broadcasts traffic announcements and when a traffic announcement comes on the tuned radio station you will hear it.

If the station does not broadcast traffic announcements, press the TRAF button and the radio will seek to a station that does. When a station that broadcasts traffic announcements is found, the radio will stop seeking and brackets will be displayed around TRAF. If no station is found that broadcasts traffic announcements, NO TRAFFIC will appear on the display.

If the brackets are on the display and TRAF is not, press the TRAF button to remove the brackets or use the TUNE knob or the SEEK arrows to go to a station that supports traffic announcements. If no station is found that broadcasts traffic announcements, NO TRAFFIC will appear on the display.

The radio will play the traffic announcements even if the volume is low. The radio will interrupt the play of a cassette tape or CD if the last tuned station broadcasts traffic announcements.

Downloaded from www.Manualslib.com manuals search engine

Radio Messages

CALIBRATE: The audio system has been calibrated for your vehicle from the factory. If CALIBRATE appears on the display, it means that the radio has not been configured properly for the vehicle and must be returned to your GM dealer for service.

Playing a Cassette Tape

The tape player is built to work best with tapes that are up to 30 to 45 minutes long on each side. Tapes longer than that are so thin they may not work well in this player. The longer side with the tape visible should face to the right. If you hear nothing or hear a garbled sound, the tape may not be in squarely. Press the eject button to remove the tape and start over.

If the ignition and radio are off, press the eject button or the RCL knob to insert and to begin play of a tape. If the ignition is on and the radio is off, the tape can be inserted and will begin playing.

While the tape is playing, use the VOL, BAL, FADE, TONE, EQ, and SEEK controls just as you do for the radio. The display will show TAPE and an arrow showing which side of the tape is playing. The tape player will play the other side of the tape when it reaches the end.

Cassette tape adapter kits for portable CD players will work in the cassette tape player. See “CD Adapter Kits” later for more information.

The tape bias is set automatically when a metal or chrome tape is inserted.

If an error appears on the display, see “Cassette Tape Messages” later in this section.

▷▷ **1 (Forward):** Press this pushbutton to quickly advance the tape. Press this pushbutton again to return to playing speed. The radio will play while the tape advances. Select stations during forward operation by using TUNE.

While in forward mode, FREQ and FWD and two right arrows will appear on the display. If the radio is playing a RDS station, FREQ will appear on the display.

▽△ **2 (Side):** Press this pushbutton to play the other side of the tape.

4◁◁ **(Reverse):** Press this pushbutton to quickly reverse the tape. Press it again to return to playing speed. The radio will play while the tape reverses. You may select stations during reverse operation by using TUNE.

Downloaded from www.Manualslib.com manuals search engine

EQ (Equalizer): Press EQ to select the desired customized equalization setting while playing a cassette. The equalization will be set whenever a cassette tape is playing. See “EQ” listed previously for more information.

△ **SEEK** ▽**:** The tape must have at least three seconds of silence between each selection for seek to work. Press the up or the down arrow to search for the next or the previous selection on the tape. You can skip as many as nine selections up or down on the tape. Choose how many selections you want to skip, then press the SEEK arrow that many times. The number of selections to be skipped will appear on the display.

△ **SCAN** ▽**:** Press and hold one of the arrows for more than two seconds until SCAN appears on the display and you hear a beep. The tape will go to the next selection, play for a few seconds, then go on to the next selection. The tape will scan forward only. Press either arrow again to stop scanning.

BAND: Press this button to listen to the radio when a cassette tape or CD is playing. The inactive tape or CD will remain safely inside the radio for future listening.

CD TAPE: Press this button to play a cassette tape or CD when listening to the radio. The inactive tape or CD will remain safely inside the radio for future listening.

⏏ **(Eject):** Press this button, located next to the cassette tape slot, to eject a tape. Eject may be activated with either the ignition or radio off. Cassette tapes may be loaded with the ignition and radio off if this button is pressed first.

Cassette Tape Messages

If an error occurs while trying to play a cassette tape, it could be for one of the following reasons:

TIGHT TAPE: This message is displayed when the tape is tight and the player cannot turn the tape hubs. Remove the tape. Hold the tape with the open end down and try to turn the right hub counterclockwise with a pencil. Turn the tape over and repeat. If the hubs do not turn easily, the tape may be damaged and should not be used in the player. Try a new tape to make sure the player is working properly.

BROKEN TAPE: This message is displayed when the tape is broken. Try a new tape.

WRAPPED TAPE: This message is displayed when the tape is wrapped around the tape head. Attempt to get the cassette out. Try a new tape.

Downloaded from www.Manualslib.com manuals search engine

CLEAN PLAYER: If this message appears on the display, the cassette tape player needs to be cleaned. It will still play tapes, but it should be cleaned as soon as possible to prevent damage to the tapes and player. See *Care of Your Cassette Tape Player on page 3-116*

If the cassette tape is not playing correctly, for any other reason, try a known good cassette.

If any error occurs repeatedly or if an error cannot be corrected, contact your GM dealer. If the radio displays an error message, write it down and provide it to your GM dealer when reporting the problem.

CD Adapter Kits

It is possible to use a portable CD player adapter kit with the cassette tape player after disabling the tight/loose tape sensing feature on the tape player.

To disable the feature, use the following steps:

1. Turn the ignition on.
2. Turn the radio off.
3. Press and hold the CD TAPE button. READY will appear on the display and flash the cassette symbol.
4. Insert the adapter into the cassette slot. It will power up the radio and begin playing.

The override feature will remain active until the eject button is pressed.

Playing a CD

Insert a CD partway into the slot, label side up. The player will pull it in and the CD should begin playing. If you want to insert a CD when the ignition is off, first press the eject button or push the RCL knob.

If the ignition or radio is turned off with the CD in the player, it will stay in the player. When the ignition or radio is turned on, the CD will start playing where it stopped, if it was the last selected audio source.

When a CD is inserted, the CD symbol will appear on the display. As each new track starts to play, the track number will appear on the display.

The CD player can play the smaller 3 inch (8 cm) single CDs with an adapter ring. Full-size CDs and the smaller CDs are loaded in the same manner.

If playing a CD-R the sound quality may be reduced due to CD-R quality, the method of recording, the quality of the music that has been recorded, and the way the CD-R has been handled. There may be an increase in skipping, difficulty in finding tracks, and/or difficulty in loading and ejecting. If these problems occur try a known good CD.

Do not add paper labels to CDs, they could get caught in the CD player.

If an error appears on the display, see “CD Messages” later in this section.

Downloaded from www.Manualslib.com manuals search engine

▷▷ **1 (Forward):** Press and hold this pushbutton to advance quickly within a track. You will hear sound at a reduced volume. Release this pushbutton to play the passage. The elapsed time of the track will appear on the display.

RDM 3 (Random): Press this pushbutton to hear the tracks in random, rather than sequential, order. RDM and the track number will appear on the display. Press this pushbutton to turn off random play.

4◁◁ (Reverse): Press and hold this pushbutton to reverse quickly within a track. You will hear sound at a reduced volume. Release this pushbutton to play the passage. The elapsed time of the track will appear on the display.

EQ (Equalizer): Press EQ to select the desired customized equalization setting while playing a CD. The equalization will be set whenever a CD is played. See “EQ” listed previously for more information.

△ **SEEK** ▽**:** Press the down arrow to go to the start of the current track if more than eight seconds have played. Press the up arrow to go to the next track. If either arrow is held or pressed more than once, the player will continue moving backward or forward through the CD.

△ **SCAN** ▽**:** Press and hold either arrow for more than two seconds until SCAN and the track number appear on the display and you hear a beep. The CD will go to the next track, play for a few seconds, then go on to the next track. Press this button again to stop scanning.

RCL (Recall): Push this knob to see how long the current track has been playing. CD TIME and the elapsed time will appear on the display. To change the default on the display, track or elapsed time, push this knob until you see the display you want, then hold the knob until the display flashes. The selected display will now be the default.

BAND: Press this button to listen to the radio when a cassette tape or CD is playing. The inactive tape or CD will remain safely inside the radio for future listening.

CD TAPE: Press this button to play a cassette tape or CD when listening to the radio. The inactive tape or CD will remain safely inside the radio for future listening.

⏏ **(Eject):** Press this button, located next to the CD slot, to eject a CD. Eject may be activated with either the ignition or radio off. CDs may be loaded with the radio and ignition off if this button is pressed first.

Downloaded from www.Manualslib.com manuals search engine

CD Messages

CHECK CD: If this message appears on the radio display and/or the CD comes out, it could be for one of the following reasons:

- You are driving on a very rough road. When the road becomes smoother, the CD should play.
- The CD is dirty, scratched, wet, or upside down.
- The air is very humid. If so, wait about an hour and try again.
- There may have been a problem while burning the CD.
- The label may be caught in the CD player.

If the CD is not playing correctly, for any other reason, try a known good CD.

If any error occurs repeatedly or if an error cannot be corrected, contact your GM dealer. If the radio displays an error message, write it down and provide it to your GM dealer when reporting the problem.

Radio with Six-Disc CD

Radio Data System (RDS)

The audio system has a Radio Data System (RDS). RDS features are available for use only on FM stations that broadcast RDS information.

With RDS, the radio can do the following:

- Seek to stations broadcasting the selected type of programming
- Receive announcements concerning local and national emergencies
- Display messages from radio stations
- Seek to stations with traffic announcements

Downloaded from www.Manualslib.com manuals search engine

This system relies upon receiving specific information from these stations and will only work when the information is available. In rare cases, a radio station may broadcast incorrect information that will cause the radio features to work improperly. If this happens, contact the radio station.

While the radio is tuned to an RDS station, the station name or call letters will appear on the display instead of the frequency. RDS stations may also provide the time of day, a program type (PTY) for current programming, and the name of the program being broadcast.

XM™ Satellite Radio Service

XM™ is a satellite radio service that is based in the 48 contiguous United States. XM™ offers 100 coast-to-coast channels including music, news, sports, talk, and children's programming. XM™ provides digital quality audio and text information that includes song title and artist name. A service fee is required in order to receive the XM™ service. For more information, contact XM™ at www.xmradio.com or call 1-800-852-XMXM (9696).

Playing the Radio

PWR (Power): Push this knob to turn the system on and off.

VOLUME: Turn this knob to increase or to decrease the volume.

RCL (Recall): Press this knob to switch the display between the radio station frequency and the time. When the ignition is off, press this knob to display the time.

For RDS, press the RCL knob to change what appears on the display while using RDS. The display options are station name, RDS station frequency, PTY, and the name of the program (if available).

For XM™ (if equipped), press the RCL knob while in XM mode to retrieve four different categories of information related to the current song or channel: Artist, Song Title, Category or PTY, Channel Number/Channel Name.

To change the default on the display, press the RCL knob until you see the display you want, then hold the knob until the display flashes. The selected display will now be the default.

Downloaded from www.Manualslib.com manuals search engine

AUTO VOL (Automatic Volume): With automatic volume, the audio system adjusts automatically to make up for road and wind noise as you drive.

Set the volume at the desired level. Press this button to select MIN, MED, or MAX. Each higher setting will allow for more volume compensation at faster vehicle speeds. Then, as you drive, automatic volume increases the volume, as necessary, to overcome noise at any speed. The volume level should always sound the same to you as you drive. To turn automatic volume off, press this button until OFF appears on the display.

Finding a Station

BAND: Press this button to switch between FM1, FM2, AM, or XM1 or XM2 (if equipped). The display will show the selection.

TUNE: Turn this knob to select radio stations.

⊲ SEEK ⊳ : Press the right or the left arrow to go to the next or to the previous station and stay there.

The radio will only seek stations with a strong signal that are in the selected band.

⊲ SCAN ⊳ : Press and hold either SCAN arrow for two seconds until SC appears on the display and you hear a beep. The radio will go to a station, play for a few seconds, then go on to the next station. Press either SCAN arrow again to stop scanning.

To scan preset stations, press and hold either SCAN arrow for more than four seconds. PRESET SCAN will appear on the display and you will hear a double beep. The radio will go to the first preset station stored on the pushbuttons, play for a few seconds, then go on to the next preset station. Press either SCAN arrow again to stop scanning presets.

The radio will only scan stations with a strong signal that are in the selected band.

Setting Preset Stations

Up to 30 stations (six FM1, six FM2, and six AM, six XM1 and six XM2 (if equipped)), can be programmed on the six numbered pushbuttons, by performing the following steps:

1. Turn the radio on.
2. Press BAND to select FM1, FM2, AM, or XM1 or XM2.

Downloaded from www.Manualslib.com manuals search engine

3. Tune in the desired station.
4. Press AUTO EQ to select the equalization.
5. Press and hold one of the six numbered pushbuttons until you hear a beep. Whenever that numbered pushbutton is pressed, the station that was set will return and the equalization that was selected will be stored for that pushbutton.
6. Repeat the steps for each pushbutton.

Setting the Tone (Bass/Treble)

AUDIO: Push the AUDIO knob until BASS, MID, or TREB appears on the display. Turn the knob to increase or to decrease. If a station is weak or noisy, decrease the treble.

To adjust bass, midrange, or treble to the middle position, select BASS, MID, or TREB and push and hold the AUDIO knob. The display level will be adjusted to the middle position and you will hear a beep.

To adjust all tone and speaker controls to the middle position, push and hold the AUDIO knob when no tone or speaker control is displayed. CENTERED will appear on the display and you will hear one beep.

AUTO EQ (Automatic Equalization): Press this button to select customized equalization settings designed for country, jazz, talk, pop, rock, and classical.

To return to the manual mode, press the AUTO EQ button until CUSTOM appears on the display. Then manually adjust the bass, midrange, and treble using the AUDIO knob.

Adjusting the Speakers (Balance/Fade)

AUDIO: To adjust the balance between the right and the left speakers, push the AUDIO knob until BAL appears on the display. Turn the knob to move the sound toward the right or the left speakers.

To adjust the fade between the front and rear speakers, push and hold the AUDIO knob until FAD appears on the display. Turn the knob to move the sound toward the front or the rear speakers.

To adjust the balance and the fade to the middle position, select balance or fade and push and hold the AUDIO knob. The display level will be adjusted to the middle position and you will hear a beep.

To adjust all tone and speaker controls to the middle position, push and hold the AUDIO knob when no tone or speaker controls are displayed. CENTERED will appear on the display and you will hear one beep.

Downloaded from www.Manualslib.com manuals search engine

Finding a Program Type (PTY) Station (RDS and XM™)

To select and find a desired PTY perform the following:

1. Press the P-TYPE button to activate program type select mode. P-TYPE and the last selected PTY will appear on the display.
2. Turn the P-TYPE knob to select a PTY.
3. Once the desired PTY is displayed, press either SEEK arrow to select and to take you to the PTY's first station.
4. To go to another station within that PTY, and the PTY is displayed, press either SEEK arrow once. If the PTY is not displayed, press either SEEK arrow twice to display the PTY and then to go to another station.
5. Press P-TYPE to exit program type select mode.

   If PTY times out and is no longer on the display, go back to Step 1.

If both P-TYPE and TRAF are on, the radio will search for stations with the selected PTY and traffic announcements.

To use the PTY interrupt feature, press and hold the P-TYPE button until you hear a beep on the PTY you want to interrupt with. When selected, an asterisk will appear beside that PTY on the display. You may select multiple interrupts, if desired. When you are listening to a CD, the last selected RDS station will interrupt play, if that selected program type format is broadcast.

SCAN: Scan the stations within a PTY by performing the following:

1. Press the P-TYPE button to activate program type select mode. P-TYPE and the last selected PTY will appear on the display.
2. Turn the P-TYPE knob to select a PTY.
3. Once the desired PTY is displayed, press and hold either SCAN arrow, and the radio will begin scanning the stations in the PTY.
4. Press either SCAN arrow to stop at a station.

If both P-TYPE and TRAF are on, the radio will scan for stations with the selected PTY and traffic announcements.

Downloaded from www.Manualslib.com manuals search engine

BAND (Alternate Frequency): Alternate frequency allows the radio to switch to a stronger station with the same program type. To turn alternate frequency on, press and hold BAND for two seconds. AF ON will appear on the display. The radio may switch to stations with a stronger frequency.

To turn alternate frequency off, press and hold BAND again for two seconds. AF OFF will appear on the display. The radio will not switch to other stations.

This function does not apply for XM™ Satellite Radio Service.

Setting Preset PTYs (RDS Only)

These buttons have factory PTY presets. Up to 12 PTYs (six FM1 and six FM2), can be programmed on the six numbered pushbuttons, by performing the following steps:

1. Press BAND to select FM1 or FM2.
2. Press the P-TYPE button to activate program type select mode. P-TYPE and the last selected PTY will appear on the display.
3. Turn the P-TYPE knob to select a PTY.
4. Press and hold one of the six numbered pushbuttons until you hear a beep. Whenever that numbered pushbutton is pressed, the PTY that was set will return.
5. Repeat the steps for each pushbutton.

RDS Messages

ALERT!: Alert warns of local or national emergencies. When an alert announcement comes on the current radio station, ALERT! will appear on the display. You will hear the announcement, even if the volume is low or a CD is playing. If a CD is playing, play will stop during the announcement. Alert announcements cannot be turned off.

ALERT! will not be affected by tests of the emergency broadcast system. This feature is not supported by all RDS stations.

Downloaded from www.Manualslib.com manuals search engine

INFO (Information): If the current station has a message, INFO will appear on the display. Press this button to see the message. The message may display the artist, song title, call in phone numbers, etc.

If the entire message is not displayed, parts of the message will appear every three seconds. To scroll through the message, press and release the INFO button. A new group of words will appear on the display after every press of this button. Once the complete message has been displayed, INFO will disappear from the display until another new message is received. The last message can be displayed by pressing the INFO button. You can view the last message until a new message is received or a different station is tuned to.

TRAF (Traffic): If TRAF appears on the display, the tuned station broadcasts traffic announcements. To receive the traffic announcement from the tuned station, press this button. Brackets will be displayed around TRAF and when a traffic announcement comes on the tuned radio station you will hear it.

If the current tuned station does not broadcast traffic announcements, press the TRAF button and the radio will seek to a station that does. When a station that broadcasts traffic announcements is found, the radio will stop seeking and brackets will be displayed around TRAF. If no station is found, NO TRAFFIC will appear on the display.

If the brackets are on the display and TRAF is not, press the TRAF button to remove the brackets or use the TUNE knob or the SEEK arrows to go to a station that supports traffic announcements. If no station is found that broadcasts traffic announcements, NO TRAFFIC will appear on the display.

The radio will play the traffic announcement if the volume is low. The radio will interrupt the play of a CD if the last tuned station broadcasts traffic announcements and the brackets are displayed.

This function does not apply to XM™ Satellite Radio Service.

Radio Messages

CAL ERR (Calibration Error): The audio system has been calibrated for your vehicle from the factory. If CAL ERR appears on the display it means that the radio has not been configured properly for the vehicle and it must be returned to your GM dealer for service.

LOCKED: This message is displayed when the THEFTLOCK® system has locked up. Take your vehicle to your GM dealer for service.

If any error occurs repeatedly or if an error cannot be corrected, contact your GM dealer.

Downloaded from www.Manualslib.com manuals search engine

XM™ Radio Messages

Radio Display Message	Condition	Action Required
XL (Explicit Language Channels)	XL on the radio display, after the channel name, indicates content with explicit language.	These channels, or any others, can be blocked at a customer's request, by calling 1-800-852-XMXM (9696).
Updating	Updating encryption code	The encryption code in the receiver is being updated, and no action is required. This process should take no longer than 30 seconds.
No Signal	Loss of signal	The system is functioning correctly, but the vehicle is in a location that is blocking the XM signal. When the vehicle is moved into an open area, the signal should return.
Loading XM	Acquiring channel audio (after 4 second delay)	The audio system is acquiring and processing audio and text data. No action is needed. This message should disappear shortly.
CH Off Air	Channel not in service	This channel is not currently in service. Tune to another channel.
CH Unavail	Channel no longer available	This previously assigned channel is no longer assigned. Tune to another station. If this station was one of the presets, choose another station for that preset button.
No Info	Artist Name/Feature not available	No artist information is available at this time on this channel. The system is working properly.
No Info	Song/Program Title not available	No song title information is available at this time on this channel. The system is working properly.

Downloaded from www.Manualslib.com manuals search engine

XM™ Radio Messages (cont'd)

Radio Display Message	Condition	Action Required
No Info	Category Name not available	No category information is available at this time on this channel. The system is working properly.
No Info	No Text/Informational message available	No text or informational messages are available at this time on this channel. The system is working properly.
Not Found	No channel available for the chosen category	There are no channels available for the selected category. The system is working properly.
XM Locked	Theft lock active	The XM receiver in the vehicle may have previously been in another vehicle. For security purposes, XM receivers cannot be swapped between vehicles. If this message is received after having your vehicle serviced, check with your GM dealer.
Radio ID	Radio ID label (channel 0)	If tuned to channel 0, this message will alternate with the XM Radio 8 digit radio ID label. This label is needed to activate the service.
Unknown	Radio ID not known (should only be if hardware failure)	If this message is received when tuned to channel 0, there may be a receiver fault. Consult with your GM dealer.
Chk XMRcvr	Hardware failure	If this message does not clear within a short period of time, the receiver may have a fault. Consult with your GM dealer.

Downloaded from www.Manualslib.com manuals search engine

Playing a CD

If the ignition or radio is turned off, with a CD in the player, it will stay in the player. When the ignition or radio is turned on, the CD will start playing where it stopped, if it was the last selected audio source.

When a CD is inserted, the CD symbol will appear on the CD. As each new track starts to play, the track number will appear on the display.

The CD player can play the smaller 3 inch (8 cm) single CDs with an adapter ring. Full-size CDs and the smaller CDs are loaded in the same manner.

If playing a CD-R the sound quality may be reduced due to CD-R quality, the method of recording, the quality of the music that has been recorded, and the way the CD-R has been handled. There may be an increase in skipping, difficulty in finding tracks, and/or difficulty in loading and ejecting. If these problems occur try a known good CD.

Do not add paper labels to CDs, they could get caught in the CD player.

If an error appears on the display, see “CD Messages” later in this section.

LOAD CD ⏏ : Press the LOAD side of this button to load CDs into the CD player. This CD player will hold up to six CDs.

To insert one CD, do the following:

1. Turn the ignition on.
2. Press and release the LOAD button.
3. Wait for the light, located to the right of the slot, to turn green.
4. Load a CD. Insert the CD partway into the slot, label side up. The player will pull the CD in.

To insert multiple CDs, do the following:

1. Turn the ignition on.
2. Press and hold the LOAD button for two seconds.

   You will hear a beep and the light, located to the right of the slot, will begin to flash.
3. Once the light stops flashing and turns green, load a CD. Insert the CD partway into the slot, label side up. The player will pull the CD in.
4. Once the CD is loaded, the light will begin flashing again. Press the LOAD button again. Once the light turns green, load the next disc. Repeat this procedure for each CD. The CD player takes up to six CDs. Do not try to load more than six.

To load more than one CD but less than six, complete Steps 1 through 3. When finished loading CDs, the radio will begin to play the last CD loaded.

If more than one CD has been loaded, a number for each CD will be displayed.

Downloaded from www.Manualslib.com manuals search engine

Playing a Specific Loaded CD

For every CD loaded, a number will appear on the display. To play a specific CD, first press the CD AUX button, then press the numbered pushbutton that corresponds to the CD. A small bar will appear under the CD number that is playing and the track number will appear.

If an error appears on the display, see “CD Messages” later in this section.

LOAD CD ⏏ (Eject): Press the CD eject side of this button to eject a CD(s). You will hear a beep and the indicator light will flash to let you know when a CD is being ejected.

REMOVE CD will appear on the display. The CD can be removed. If the CD is not removed, after 25 seconds, the CD will be automatically pulled back into the player. If the CD is pushed back into the player, before the 25 second time period is complete, the player will sense an error and will try to eject the CD several times before stopping.

Do not repeatedly press the CD eject button to eject a CD after trying to push it in manually. The player’s 25-second eject timer will reset at each press of eject, causing the player to not eject the CD until the 25-second time period has elapsed.

Once the player stops and the CD is ejected, remove the CD. After removing the CD, push the PWR knob off and then on again, or wait for the system to reset. This will clear the CD-sensing feature and enable CDs to be loaded into the player again.

≪ REV (Reverse): Press and hold this button to reverse quickly within a track. You will hear sound at a reduced volume. Release this button to play the passage. The elapsed time of the track will appear on the display.

FWD ≫ (Forward): Press and hold this button to advance quickly within a track. You will hear sound at a reduced volume. Release this button to play the passage. The elapsed time of the track will appear on the display.

RPT (Repeat): With repeat, one track or an entire CD can be repeated.

To use repeat, do the following:

- To repeat the track you are listening to, press and release the RPT button. RPT will appear on the display. Press RPT again to turn off repeat play.
- To repeat the CD you are listening to, press and hold the RPT button for two seconds. RPT will appear on the display. Press RPT again to turn off repeat play.

Downloaded from www.Manualslib.com manuals search engine

RDM (Random): With random, you can listen to the tracks in random, rather than sequential, order, on one CD or on all of the CDs.

To use random, do one of the following:

- To play the tracks on the CD you are listening to in random order, press and release the RDM button. RANDOM ONE will appear on the display. Press RDM again to turn off random play.
- To play the tracks on all of the CDs that are loaded, in random order, press and hold RDM for more than two seconds. You will hear a beep and RANDOM ALL will appear on the display. Press RDM again to turn off random play.

AUTO EQ (Automatic Equalization): Press AUTO EQ to select the desired equalization setting while playing a CD. The equalization will be set whenever a CD is played. For more information on AUTO EQ, see “AUTO EQ” listed previously in this section.

⊢ SEEK ⊣ : Press the left arrow to go to the start of the current track, if more than ten seconds have played. Press the right arrow to go to the next track. If either arrow is held or pressed more than once, the player will continue moving backward or forward through the CD.

⊢ SCAN ⊣ : To scan one CD, press and hold either SCAN arrow for more than two seconds until SCAN appears on the display and you hear a beep. Use this feature to listen to 10 seconds of each track of the currently selected CD. Press either SCAN arrow again, to stop scanning.

To scan all loaded CDs, press and hold either SCAN arrow for more than four seconds until CD SCAN appears on the display and you hear a beep. Use this feature to listen to 10 seconds of the first track of each loaded CD. Press either SCAN arrow again, to stop scanning.

RCL (Recall): Press this knob to see how long the current track has been playing. To change the default on the display, track and elapsed time, press the knob until you see the display you want, then hold the knob until the display flashes. The selected display will now be the default.

BAND: Press this button to play the radio when a CD is playing. The inactive CD(s) will remain safely inside the radio for future listening.

CD AUX (Auxiliary): Press this button to play a CD when listening to the radio.

Downloaded from www.Manualslib.com manuals search engine

Using Song List Mode

The six-disc CD changer has a feature called song list. This feature is capable of saving 20 track selections.

To save tracks into the song list feature, perform the following steps:

1. Turn the CD player on and load it with at least one CD. See “LOAD CD” listed previously in this section for more information.
2. Check to see that the CD changer is not in song list mode. S-LIST should not appear in the display. If S-LIST is present, press the SONG LIST button to turn it off.
3. Select the desired CD by pressing the numbered pushbutton and then use the SEEK SCAN right arrow to locate the track to be saved. The track will begin to play.
4. Press and hold the SONG LIST button to save the track into memory. When SONG LIST is pressed, one beep will be heard immediately. After two seconds of continuously pressing the SONG LIST button, two beeps will be heard to confirm that the track has been saved.
5. Repeat Steps 3 and 4 for saving other selections.

S-LIST FULL will appear on the display if you try to save more than 20 selections.

To play the song list, press the SONG LIST button. One beep will be heard and S-LIST will appear on the display. The recorded tracks will begin to play in the order they were saved.

Seek through the song list by using the SEEK SCAN arrows. Seeking past the last saved track will return the song list to the first saved track.

To delete tracks from the song list, perform the following steps:

1. Turn the CD player on.
2. Press the SONG LIST button to turn song list on. S-LIST will appear on the display.
3. Press the SEEK SCAN arrows to select the desired track to be deleted.
4. Press and hold the SONG LIST button for two seconds. When SONG LIST is pressed, one beep will be heard immediately. After two seconds of continuously pressing the SONG LIST button, two beeps will be heard to confirm that the track has been deleted.

After a track has been deleted, the remaining tracks are moved up the list. When another track is added to the song list, the track will be added to the end of the list.

Downloaded from www.Manualslib.com manuals search engine

To delete the entire song list, perform the following steps:

1. Turn the CD player on.
2. Press the SONG LIST button to turn song list on. S-LIST will appear on the display.
3. Press and hold the SONG LIST button for more than four seconds. One beep will be heard, followed by two beeps after two seconds, and a final beep will be heard after four seconds. S-LIST EMPTY will appear on the display indicating the song list has been deleted.

If a CD is ejected, and the song list contains saved tracks from that CD, those tracks are automatically deleted from the song list. Any tracks saved to the song list again are added to the bottom of the list.

To end song list mode, press the SONG LIST button. One beep will be heard and S-LIST will be removed from the display.

CD Messages

CHECK CD: If this message appears on the display and/or the CD comes out, it could be for one of the following reasons:

- It is very hot. When the temperature returns to normal, the CD should play.
- You are driving on a very rough road. When the road becomes smoother, the CD should play.
- The CD is dirty, scratched, wet, or upside down.
- The air is very humid. If so, wait about an hour and try again.
- There may have been a problem while burning the CD.
- The label may be caught in the CD player.

If the CD is not playing correctly, for any other reason, try a known good CD.

If any error occurs repeatedly or if an error cannot be corrected, contact your GM dealer. If the radio displays an error message, write it down and provide it to your GM dealer when reporting the problem.

Downloaded from www.Manualslib.com manuals search engine

Entertainment System

Your vehicle may have a DVD entertainment system. The entertainment system works with the vehicle's audio system and includes a DVD player, a video display screen, headphones, and a remote control. The entertainment system also integrates the rear climate control and rear seat audio functions.

Before You Drive

The entertainment system is for passengers in the second and third row seats only. The driver cannot safely view the video screen while driving and should not try to do so.

In severe or extreme weather conditions the entertainment system will shut down until the temperature is within the operating range. This protection feature will keep the video components from being damaged while the temperature is below –4°F (–20°C) or above 140°F (60°C). To resume operation, shut off the entertainment system, pull down the video screen, and then heat or cool the vehicle until the temperature is within the operating range.

Headphones

The entertainment system includes dual channel, wireless headphones. The headphones have an ON/OFF switch, a channel A/B switch, and a volume control.

To use the headphones, turn the switch located on the left side to ON. An indicator light located on the right side will illuminate. If the light does not illuminate, the batteries may need to be replaced. See "Battery Replacement" later in this section for more information. Switch the headphones to OFF when not in use.

If you move too far forward, step out of the vehicle or break the line of sight between the headphones and the display above the video screen, the sound in the headphones will be degraded or will cut out entirely. If the system is shut off, or the headphones are out of the line of sight for more than three minutes, the headphones will shut off automatically to save battery life.

Downloaded from www.Manualslib.com manuals search engine

If the channel switch, located on the right side, is on A, the headphones will play the DVD or auxiliary device. See “Stereo RCA Jacks” later in this section for more information. If the channel switch is on B, the headphones will play the rear seat audio system. See *Rear Seat Audio (RSA) (Without Entertainment System) on page 3-111* or *Rear Seat Audio (RSA) (With Entertainment System) on page 3-113* for more information.

To adjust the volume on the headphones, use the volume control located on the right side.

Notice: **Do not store the headphones in heat or direct sunlight. This could damage the headphones and repairs would not be covered by your warranty. Keep the headphones stored in a cool, dry place.**

Battery Replacement

To change the batteries, do the following:

1. Slide open the battery door located on the left side of the headphones.
2. Replace the two AAA batteries in the compartment. Make sure that they are installed correctly.
3. Slide the battery door shut.

If the headphones are to be stored for a long period of time, remove the batteries and keep them in a cool, dry place.

Downloaded from www.Manualslib.com manuals search engine

Stereo RCA Jacks

The RCA jacks are located on the DVD player faceplate. They allow audio and video signals to be connected from an auxiliary device such as a camcorder or a video game unit. Adapter connectors or cables, not included, may be required to connect the auxiliary device to the RCA jacks. Refer to the manufacturer's instructions for proper usage.

To use the auxiliary function, connect a camcorder or a video game unit to the RCA jacks and turn on the auxiliary device. If you want to view a DVD, insert the DVD into the DVD player. The system will automatically switch to DVD and start to play. To switch between the auxiliary device and the DVD, press the SOURCE button on the DVD player or on the remote control. See "DVD Player" and "Remote Control" later in this section for more information.

Audio Speakers

Only one audio source can be heard through the speakers at one time.

Audio from the radio or CD player will be heard through all speakers when the front audio system is being used and the rear seat audio system is off.

Sound from the DVD player or an auxiliary device can be heard through all speakers when the front audio system and rear seat audio are off and a DVD or auxiliary device is playing.

To hear the DVD, auxiliary device, or rear seat audio system while the front audio system is on, use the headphones. While the rear seat audio system is on, the rear speakers will be muted.

Downloaded from www.Manualslib.com manuals search engine

Video Screen

The video screen is located in the overhead console.

To use the video screen, do the following:

1. Push forward on the release button and the screen will fold down.
2. Pull the screen toward you and adjust its position as desired.

When the video screen is not in use, push it up into its locked position.

If a DVD is playing and the screen is raised to its locked position, the screen will shut off, but the DVD will continue to play through the previously selected audio source.

Notice: **Directly touching the video screen may damage it. Do not touch the screen. See "Cleaning the Video Screen" later in this section for more information.**

Downloaded from www.Manualslib.com manuals search engine

DVD Player

The DVD player is located in the front floor console. The DVD player can be controlled by the buttons on the DVD player and by the buttons on the remote control. See “Remote Control” later in this section for more information.

The DVD player works while the ignition is in RUN, ACCESSORY, or when RAP is active.

The entertainment system is only compatible with DVDs authorized for use in the United States and Canada. Regular audio CDs can also be played by the DVD player. Home recorded CDs (CDRs) may not play in this DVD player. Try the audio system CD player instead.

DVD Player Buttons

SOURCE: Press this button to switch the source for the entertainment system between the auxiliary device, connected to the RCA jacks, and the DVD player. Pressing this button has no effect when there is no auxiliary device connected.

▷ / ❚❚ (Play/Pause): Press this button to start play. Press while playing to pause. Press it again to continue playing.

□ / ⏏ (Stop/Eject): Press this button to stop playing. Press the button a second time to eject the disc.

Playing a Disc

To play a disc, gently insert the disc with the label side up into the loading slot until it stops. The DVD player will continue loading the disc and the player will automatically start.

If a disc is already in the player, press the play/pause button on the DVD player faceplate or on the remote control.

Downloaded from www.Manualslib.com manuals search engine

Some DVDs will not allow fast forwarding or skipping of the copyright information or the previews. Some DVDs will begin playing the movie automatically after the previews have finished, there may be a delay of up to 30 seconds. If the DVD does not begin playing the movie automatically, press the play/pause button on the DVD player faceplate or the remote control. If the DVD still does not play, refer to the on-screen instructions.

Stopping and Resuming Playback

To stop playing a disc, press the stop/eject button on the DVD player.

To resume playback, press the play/pause button. The movie will start playing from where it was last stopped if the disc has not been ejected. If the disc has been ejected, the player will start playing at the beginning.

Ejecting a Disc

Press the stop/eject button on the DVD player once to stop and a second time to eject the disc.

If a disc is ejected from the player, but not removed, the DVD player will reload the disc after a short period of time.

Remote Control

To use the remote control, aim it at the display above the video screen and press the desired button. Direct sunlight or very bright light may affect the ability of the entertainment system to receive signals from the remote control. Be sure the remote's batteries are not discharged, as this will also affect the function of the remote control. Objects blocking the line of sight may also affect the function of the remote control.

Notice: **Storing the remote control in a hot area or in direct sunlight may damage it, and the repairs would not be covered by your warranty. Keep the remote control stored in a cool, dry place.**

Downloaded from www.Manualslib.com manuals search engine

Remote Control Buttons

▼ **Volume** ▲**:** Press the up or the down arrow to increase or to decrease the volume.

▶/II **(Play/Pause):** Press this button to play a disc. Press this button while a disc is playing to pause. Press it again to continue playing. If you press and hold this button for three seconds or more, the DVD player will turn off.

▶ **Fwd/**◀ **Rev (Fast Forward/Reverse):** Press the right or left arrow once to fast forward or reverse the DVD. To resume play, press the button again or press the play/pause button. Pressing and holding an arrow will fast forward or fast reverse the DVD and play will resume when the arrow is released. These buttons may not work when the DVD is playing the copyright information or the previews.

▲ **Next/**▼ **Prev (Next/Previous):** Press the up or the down arrow to select the next or the previous chapter. These buttons may not work when the DVD is playing the copyright information or the previews.

Menu: Press this button to view the media menu. The media menu is different on every disc. Use the up, down, right, and left arrow buttons to move the cursor around the media menu. After making the selection, press Enter. Some discs may contain a short skit leading up to the media menu.

Source: Press this button to switch the source for the entertainment system between the auxiliary device, connected to the RCA jacks, and the DVD player. Pressing this button has no effect when there is no auxiliary device connected.

Downloaded from www.Manualslib.com manuals search engine

Battery Replacement

To change the batteries, do the following:

1. Remove the screw and open the battery door located on the back of the remote control.
2. Replace the two AAA batteries in the compartment. Make sure that they are installed correctly.
3. Replace the battery door and screw.

If the remote control is to be stored for a long period of time, remove the batteries and keep them in a cool, dry place.

DVD Distortion

There may be an experience with video distortion when operating cellular phones, scanners, CB radios, Global Position Systems (GPS)*, two-way radios, mobile fax, or walkie talkies.

It may be necessary to turn off the DVD player when operating one of these devices in or near the vehicle.

*Excludes the OnStar® System.

Cleaning the DVD Player

When cleaning the outside DVD faceplate and buttons, use only a clean cloth dampened with clean water.

Cleaning the Video Screen

When cleaning the video screen, use only a clean cloth dampened with clean water. Use care when directly touching or cleaning the screen, as damage may result.

Rear Seat Audio (RSA) (Without Entertainment System)

This feature allows rear seat passengers to listen to and control any of the sources: radio and CDs. However, the rear seat passengers can only control the sources that the front seat passengers are not listening to. For example, rear seat passengers may listen to and control a CD through headphones, while the driver listens to the radio through the front speakers. The rear seat passengers have control of the volume for each set of headphones.

The front seat audio controls always have priority over the RSA controls. If the front seat passengers switch the source for the main radio to a remote source, the RSA will not be able to control the remote source. You can operate the RSA when the main radio is off.

Primary Radio Controls

The following function is controlled by the main radio:

PWR (Power): Press this knob twice to turn RSA off.

Downloaded from www.Manualslib.com manuals search engine

Rear Seat Radio Controls

The following functions are controlled by the RSA system:

PWR (Power): Press this button to turn the system on or off. The rear speakers will be muted when the RSA power is turned on.

VOL (Volume): Press this knob lightly so it extends. Turn the knob to increase or to decrease the volume. Push the knob back into it's stored position when you are not using it. The upper knob controls the upper headphones and the lower knob controls the lower headphones.

BAND: Press this button to switch between FM1, FM2, AM, or XM1 or XM2 (if equipped). If the front passengers are already listening to the radio, the RSA will not switch between the bands and cannot change the frequency.

Press this button to play a CD when listening to the radio.

△ **SEEK** ▽**:** When listening to the radio, press the up or the down arrow to go to the next or the previous station and stay there. This function is inactive if the front seat passengers are listening to the radio.

To scan stations, press and hold either SEEK arrow until the radio goes into scan mode. The radio will go to a station, play for a few seconds, then go on to the next station. Press SEEK again to stop scanning. This function is inactive if the front seat passengers are listening to the radio.

When a CD is playing, press the up arrow to go to the next track on the CD. Press the down arrow to go to the start of the current track if more than eight seconds have played. This function is inactive if the front seat passengers are listening to a CD.

Downloaded from www.Manualslib.com manuals search engine

P.SET PROG (Preset Program): Press this button to scan the preset radio stations set on the pushbuttons on the main radio. The radio will go to a preset station stored on the pushbuttons, play for a few seconds, then go on to the next preset station. Press this button again to stop scanning presets. This function is inactive if the front seat passengers are listening to the radio.

When a CD is playing in the six-disc CD changer, press this button to select the next CD, if multiple CDs are loaded. This function is inactive if the front seat passengers are listening to a CD.

When an MP3 CD is playing, press this button to go to the next folder. This function is inactive if the front seat passengers are listening to a CD.

TAPE CD: Press this button to play a CD when listening to the radio.

Rear Seat Audio (RSA) (With Entertainment System)

This feature allows rear seat passengers to listen to and control any of the sources: radio, CDs, DVD, and auxiliary device. However, the rear seat passengers can only control the sources that the front seat passengers are not listening to. For example, rear seat passengers may listen to and control a CD through headphones while the driver listens to the radio through the front speakers. The rear seat passengers have control of the volume for each set of headphones.

The front seat audio controls always have priority over the RSA controls. If the front seat passengers switch the source for the main radio to a remote source, the RSA will not be able to control the remote source. You can operate the RSA when the main radio is off.

The DVD or auxiliary device will always be available on channel A of the headphones. All other sources are available on channel B. You will not be able to listen to XM, on channel B, if you are listening to a DVD or an auxiliary device on channel B and vice versa.

Downloaded from www.Manualslib.com manuals search engine

RSA PWR (Power): Press this button to turn the system on or off. The headphone symbol will appear on the display above the video screen when the system is on. The rear speakers will be muted when the RSA power is turned on.

BAND: Press this button to switch between FM1, FM2, AM, or XM1 or XM2 (if equipped) when the headphones are on channel B. The selected radio station will appear on the display above the video screen. If the front passengers are listening to the radio, the RSA will not switch between the bands and cannot change the station.

◀ ▶ **(Tune):** When listening to the radio, press the right or the left arrow to go to the next or the previous station and stay there. This function is inactive if the front seat passengers are listening to the radio.

When a CD is playing, press the right arrow to go to the next track on the CD. Press the left arrow to go to the start of the current track, if more than eight seconds have played. This function is inactive if the front seat passengers are listening to a CD.

P.SET SCAN (Preset Scan): Press and hold this button to scan the preset radio stations set on the pushbuttons on the main radio. The radio will go to a preset station stored on the pushbuttons, play for a few seconds, then go on to the next preset station. The selected radio station will appear on the display above the video screen. Press this button again to stop scanning presets. This function is inactive if the front seat passengers are listening to the radio.

When a CD is playing in the six-disc CD changer, press this button to select the next CD, if multiple CDs are loaded. This function is inactive if the front seat passengers are listening to a CD.

CD TAPE: Press this button to switch between playing a CD, a DVD, or an auxiliary device when the headphones are on channel B. If one of the devices are not loaded, the system will skip over the device when this button is pressed.

Downloaded from www.Manualslib.com manuals search engine

Theft-Deterrent Feature

THEFTLOCK® is designed to discourage theft of your vehicle's radio. The feature works automatically by learning a portion of the Vehicle Identification Number (VIN). If the radio is moved to a different vehicle, it will not operate and LOCKED will appear on the display.

With THEFTLOCK® activated, the radio will not operate if stolen.

Audio Steering Wheel Controls

If your vehicle has this feature, some audio controls can be adjusted at the steering wheel. They include the following:

PRESET: Press this button to play the stations that are programmed on the radio preset pushbuttons. The radio will go to a preset station, play for a few seconds, then go to the next preset station. Press this button again to stop scanning the preset stations. The radio will only scan preset stations with a strong signal that are in the selected band.

When a CD is playing in the six-disc CD changer, press this button to go to the next available CD, if multiple CDs are loaded.

When an MP3 CD is playing, press this button to go to the next folder.

AM FM: Press this button to switch between FM1, FM2, AM, or XM1 or XM2 (if equipped).

When a CD is playing, press this button to listen to the radio. The inactive CD will remain safely inside the radio for future listening.

▲ SEEK ▼: Press the up or the down arrow to go to the next or to the previous radio station and stay there. The radio will only seek stations with a strong signal that are in the selected band.

When a CD is playing, press the up or the down arrow to fast forward or reverse.

Downloaded from www.Manualslib.com manuals search engine

▲ **VOL** ▼ **(Volume):** Press the up or the down arrow to increase or to decrease the volume.

PLAY: When listening to the radio, press this button to play a CD.

MUTE: Press this button to silence the system. Press it again, or any other radio button, to turn the sound on.

Radio Reception

AM

The range for most AM stations is greater than for FM, especially at night. The longer range can cause station frequencies to interfere with each other. Static can occur on AM stations caused by things like storms and power lines. Try reducing the treble to reduce this noise.

FM Stereo

FM stereo will give the best sound, but FM signals will reach only about 10 to 40 miles (16 to 65 km). Tall buildings or hills can interfere with FM signals, causing the sound to fade in and out.

XM™ Satellite Radio Service

XM™ Satellite Radio Service gives digital radio reception from coast to coast. Just as with FM, tall buildings or hills can interfere with satellite radio signals, causing the sound to fade in and out. The radio may display NO SIGNAL to indicate interference.

Care of Your Cassette Tape Player

A tape player that is not cleaned regularly can cause reduced sound quality, ruined cassettes or a damaged mechanism. Cassette tapes should be stored in their cases away from contaminants, direct sunlight and extreme heat. If they aren't, they may not operate properly or may cause failure of the tape player.

Your tape player should be cleaned regularly after every 50 hours of use. Your radio may display CLEAN PLAYER to indicate that you have used your tape player for 50 hours without resetting the tape clean timer. If this message appears on the display, your cassette tape player needs to be cleaned. It will still play tapes, but you should clean it as soon as possible to prevent damage to your tapes and player. If you notice a reduction in sound quality, try a known good cassette to see if the tape or the tape player is at fault. If this other cassette has no improvement in sound quality, clean the tape player.

Downloaded from www.Manualslib.com manuals search engine

For best results, use a scrubbing action, non-abrasive cleaning cassette with pads which scrub the tape head as the hubs of the cleaner cassette turn. The recommended cleaning cassette is available through your dealership.

The cut tape detection feature of your cassette tape player may identify the cleaning cassette as a damaged tape, in error. To prevent the cleaning cassette from being ejected, use the following steps:

1. Turn the ignition on.
2. Turn the radio off.
3. Press and hold the CD TAPE button for five seconds. The tape symbol on the display will flash for two seconds.
4. Insert the scrubbing action cleaning cassette.
5. Eject the cleaning cassette after the manufacturer's recommended cleaning time.

After the cleaning cassette is ejected, the cut tape detection feature will be active again.

You may also choose a non-scrubbing action, wet-type cleaner which uses a cassette with a fabric belt to clean the tape head. This type of cleaning cassette will not eject on its own. A non-scrubbing action cleaner may not clean as thoroughly as the scrubbing type cleaner. The use of a non-scrubbing action, dry-type cleaning cassette is not recommended.

After you clean the player, press and hold the eject button for five seconds to reset the CLEAN PLAYER indicator. The radio will display --- to show the indicator was reset.

Cassettes are subject to wear and the sound quality may degrade over time. Always make sure the cassette tape is in good condition before you have your tape player serviced.

Downloaded from www.Manualslib.com manuals search engine

Care of Your CDs and DVDs

Handle discs carefully. Store them in their original cases or other protective cases and away from direct sunlight and dust. If the surface of a disc is soiled, dampen a clean, soft cloth in a mild, neutral detergent solution and clean it, wiping from the center to the edge.

Be sure never to touch the side without writing when handling discs. Pick up discs by grasping the outer edges or the edge of the hole and the outer edge.

Care of Your CD and DVD Player

The use of CD lens cleaners for CDs is not advised, due to the risk of contaminating the lens of the CD optics with lubricants internal to the CD mechanism.

Fixed Mast Antenna

The fixed mast antenna can withstand most car washes without being damaged. If the mast should ever become slightly bent, straighten it out by hand. If the mast is badly bent, replace it.

Check occasionally to make sure the mast is still tightened to the fender. If tightening is required, tighten by hand, then with a wrench one quarter turn.

XM™ Satellite Radio Antenna System

The XM™ Satellite Radio antenna is located on the roof of your vehicle. Keep this antenna clear of snow and ice build up for clear radio reception.

Loading items onto the roof of your vehicle can interfere with the performance of the XM™ system. Make sure that the XM™ satellite antenna is not obstructed.

Downloaded from www.Manualslib.com manuals search engine

Section 4 Driving Your Vehicle

Your Driving, the Road, and Your Vehicle 4-2
Defensive Driving 4-2
Drunken Driving 4-2
Control of a Vehicle 4-5
Braking 4-5
Anti-Lock Brake System (ABS) 4-6
Braking in Emergencies 4-7
Traction Control System (TCS) 4-8
Steering 4-9
Off-Road Recovery 4-11
Passing 4-12
Loss of Control 4-13
Driving at Night 4-14
Driving in Rain and on Wet Roads 4-16
City Driving 4-19
Freeway Driving 4-20
Before Leaving on a Long Trip 4-21
Highway Hypnosis 4-22
Hill and Mountain Roads 4-22
Winter Driving 4-24
If You Are Stuck: In Sand, Mud, Ice or Snow 4-28
Rocking Your Vehicle to Get It Out 4-29
Loading Your Vehicle 4-29
Towing 4-34
Towing Your Vehicle 4-34
Recreational Vehicle Towing 4-34
Level Control 4-35
Towing a Trailer 4-36

Downloaded from www.Manualslib.com manuals search engine

Your Driving, the Road, and Your Vehicle

Defensive Driving

The best advice anyone can give about driving is: Drive defensively.

Please start with a very important safety device in your vehicle: Buckle up. See *Safety Belts: They Are for Everyone on page 1-30*.

Defensive driving really means “be ready for anything.” On city streets, rural roads, or freeways, it means “always expect the unexpected.”

Assume that pedestrians or other drivers are going to be careless and make mistakes. Anticipate what they might do. Be ready for their mistakes.

Rear-end collisions are about the most preventable of accidents. Yet they are common. Allow enough following distance. It is the best defensive driving maneuver, in both city and rural driving. You never know when the vehicle in front of you is going to brake or turn suddenly.

Defensive driving requires that a driver concentrate on the driving task. Anything that distracts from the driving task — such as concentrating on a cellular telephone call, reading, or reaching for something on the floor — makes proper defensive driving more difficult and can even cause a collision, with resulting injury. Ask a passenger to help do things like this, or pull off the road in a safe place to do them yourself. These simple defensive driving techniques could save your life.

Drunken Driving

Death and injury associated with drinking and driving is a national tragedy. It is the number one contributor to the highway death toll, claiming thousands of victims every year.

Alcohol affects four things that anyone needs to drive a vehicle:

- Judgment
- Muscular Coordination
- Vision
- Attentiveness

Police records show that almost half of all motor vehicle-related deaths involve alcohol. In most cases, these deaths are the result of someone who was drinking and driving. In recent years, more than 16,000 annual motor vehicle-related deaths have been associated with the use of alcohol, with more than 300,000 people injured.

Downloaded from www.Manualslib.com manuals search engine

Many adults — by some estimates, nearly half the adult population — choose never to drink alcohol, so they never drive after drinking. For persons under 21, it is against the law in every U.S. state to drink alcohol. There are good medical, psychological and developmental reasons for these laws.

The obvious way to eliminate the leading highway safety problem is for people never to drink alcohol and then drive. But what if people do? How much is “too much” if someone plans to drive? It is a lot less than many might think. Although it depends on each person and situation, here is some general information on the problem.

The Blood Alcohol Concentration (BAC) of someone who is drinking depends upon four things:

- The amount of alcohol consumed
- The drinker’s body weight
- The amount of food that is consumed before and during drinking
- The length of time it has taken the drinker to consume the alcohol

According to the American Medical Association, a 180 lb (82 kg) person who drinks three 12 ounce (355 ml) bottles of beer in an hour will end up with a BAC of about 0.06 percent. The person would reach the same BAC by drinking three 4 ounce (120 ml) glasses of wine or three mixed drinks if each had 1-1/2 ounces (45 ml) of liquors like whiskey, gin, or vodka.

It is the amount of alcohol that counts. For example, if the same person drank three double martinis (3 ounces or 90 ml of liquor each) within an hour, the person’s BAC would be close to 0.12 percent. A person who consumes food just before or during drinking will have a somewhat lower BAC level.

Downloaded from www.Manualslib.com manuals search engine

There is a gender difference, too. Women generally have a lower relative percentage of body water than men. Since alcohol is carried in body water, this means that a woman generally will reach a higher BAC level than a man of her same body weight will when each has the same number of drinks.

The law in most U.S. states, and throughout Canada, sets the legal limit at 0.08 percent. In some other countries, the limit is even lower. For example, it is 0.05 percent in both France and Germany. The BAC limit for all commercial drivers in the United States is 0.04 percent.

The BAC will be over 0.10 percent after three to six drinks (in one hour). Of course, as we have seen, it depends on how much alcohol is in the drinks, and how quickly the person drinks them.

But the ability to drive is affected well below a BAC of 0.10 percent. Research shows that the driving skills of many people are impaired at a BAC approaching 0.05 percent, and that the effects are worse at night. All drivers are impaired at BAC levels above 0.05 percent.

Statistics show that the chance of being in a collision increases sharply for drivers who have a BAC of 0.05 percent or above. A driver with a BAC level of 0.06 percent has doubled his or her chance of having a collision. At a BAC level of 0.10 percent, the chance of this driver having a collision is 12 times greater; at a level of 0.15 percent, the chance is 25 times greater!

The body takes about an hour to rid itself of the alcohol in one drink. No amount of coffee or number of cold showers will speed that up. “I will be careful” is not the right answer. What if there is an emergency, a need to take sudden action, as when a child darts into the street? A person with even a moderate BAC might not be able to react quickly enough to avoid the collision.

There is something else about drinking and driving that many people do not know. Medical research shows that alcohol in a person’s system can make crash injuries worse, especially injuries to the brain, spinal cord, or heart. This means that when anyone who has been drinking — driver or passenger — is in a crash, that person’s chance of being killed or permanently disabled is higher than if the person had not been drinking.

Downloaded from www.Manualslib.com manuals search engine

⚠ CAUTION:

Drinking and then driving is very dangerous. Your reflexes, perceptions, attentiveness, and judgment can be affected by even a small amount of alcohol. You can have a serious — or even fatal — collision if you drive after drinking. Please do not drink and drive or ride with a driver who has been drinking. Ride home in a cab; or if you are with a group, designate a driver who will not drink.

Control of a Vehicle

You have three systems that make your vehicle go where you want it to go. They are the brakes, the steering, and the accelerator. All three systems have to do their work at the places where the tires meet the road.

Sometimes, as when you are driving on snow or ice, it is easy to ask more of those control systems than the tires and road can provide. That means you can lose control of your vehicle.

Braking

Braking action involves perception time and reaction time.

First, you have to decide to push on the brake pedal. That is perception time. Then you have to bring up your foot and do it. That is reaction time.

Average reaction time is about three-fourths of a second. But that is only an average. It might be less with one driver and as long as two or three seconds or more with another. Age, physical condition, alertness, coordination and eyesight all play a part. So do alcohol, drugs and frustration. But even in three-fourths of a second, a vehicle moving at 60 mph (100 km/h) travels 66 feet (20 m). That could be a lot of distance in an emergency, so keeping enough space between your vehicle and others is important.

And, of course, actual stopping distances vary greatly with the surface of the road (whether it is pavement or gravel); the condition of the road (wet, dry, icy); tire tread; the condition of your brakes; the weight of the vehicle and the amount of brake force applied.

Avoid needless heavy braking. Some people drive in spurts — heavy acceleration followed by heavy braking — rather than keeping pace with traffic. This is a mistake. Your brakes may not have time to cool between hard stops. Your brakes will wear out much faster if you do a lot of heavy braking.

Downloaded from www.Manualslib.com manuals search engine

If you keep pace with the traffic and allow realistic following distances, you will eliminate a lot of unnecessary braking. That means better braking and longer brake life.

If your engine ever stops while you are driving, brake normally but do not pump your brakes. If you do, the pedal may get harder to push down. If your engine stops, you will still have some power brake assist. But you will use it when you brake. Once the power assist is used up, it may take longer to stop and the brake pedal will be harder to push.

Anti-Lock Brake System (ABS)

Your vehicle may have anti-lock brakes. ABS is an advanced electronic braking system that will help prevent a braking skid.

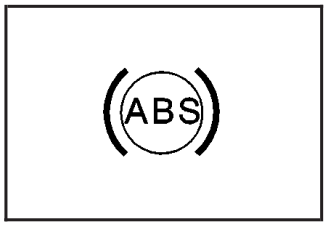

If your vehicle has anti-lock brakes, this warning light on the instrument panel will come on briefly when you start your vehicle.

When you start your engine, or when you begin to drive away, your anti-lock brake system will check itself.

You may hear a momentary motor or clicking noise while this test is going on, and you may even notice that your brake pedal moves or pulses a little. This is normal.

Let us say the road is wet and you are driving safely. Suddenly, an animal jumps out in front of you. You slam on the brakes and continue braking. Here is what happens with ABS:

A computer senses that wheels are slowing down. If one of the wheels is about to stop rolling, the computer will separately work the brakes at each wheel.

Downloaded from www.Manualslib.com manuals search engine

The anti-lock system can change the brake pressure faster than any driver could. The computer is programmed to make the most of available tire and road conditions. This can help you steer around the obstacle while braking hard.

As you brake, your computer keeps receiving updates on wheel speed and controls braking pressure accordingly.

Remember: Anti-lock does not change the time you need to get your foot up to the brake pedal or always decrease stopping distance. If you get too close to the vehicle in front of you, you will not have time to apply your brakes if that vehicle suddenly slows or stops. Always leave enough room up ahead to stop, even though you have anti-lock brakes.

Using Anti-Lock

Do not pump the brakes. Just hold the brake pedal down firmly and let anti-lock work for you. You may feel a slight brake pedal pulsation or notice some noise, but this is normal.

Braking in Emergencies

At some time, nearly every driver gets into a situation that requires hard braking.

If you have anti-lock, you can steer and brake at the same time. However, if you do not have anti-lock, your first reaction — to hit the brake pedal hard and hold it down — may be the wrong thing to do. Your wheels can stop rolling. Once they do, the vehicle cannot respond to your steering. Momentum will carry it in whatever direction it was headed when the wheels stopped rolling. That could be off the road, into the very thing you were trying to avoid, or into traffic.

Downloaded from www.Manualslib.com manuals search engine

If you do not have anti-lock, use a “squeeze” braking technique. This will give you maximum braking while maintaining steering control. You can do this by pushing on the brake pedal with steadily increasing pressure.

In an emergency, you will probably want to squeeze the brakes hard without locking the wheels. If you hear or feel the wheels sliding, ease off the brake pedal. This will help you retain steering control. If you *do* have anti-lock, it is different. See *Anti-Lock Brake System (ABS) on page 4-6*.

In many emergencies, steering can help you more than even the very best braking.

Traction Control System (TCS)

Your vehicle may have a traction control system that limits wheel spin. This is especially useful in slippery road conditions. The system operates only if it senses that one or both of the front wheels are spinning or beginning to lose traction. When this happens, the system works the front brakes and reduces engine power to limit wheel spin.

The TRACTION ACTIVE message will come on when the traction control system is limiting wheel spin. See *Traction Active Message on page 3-46*. You may feel or hear the system working, but this is normal.

If your vehicle is in cruise control when the traction control system begins to limit wheel spin, the cruise control will automatically disengage. When road conditions allow you to safely use it again, you may reengage the cruise control. See *Cruise Control on page 3-12*.

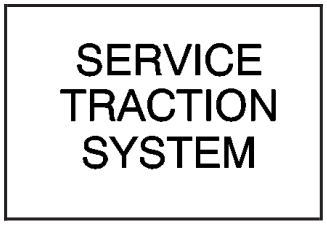

United States

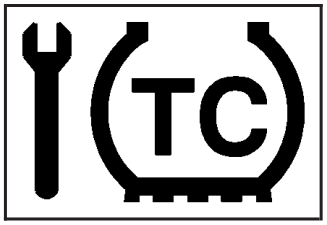

Canada

If this message comes on and stays on or comes on while you are driving, there’s a problem with your traction control system.

See *Service Traction System Warning Message on page 3-46*. When this warning message is on, the TRAC OFF light will come on to remind you that the system will not limit wheel spin. Adjust your driving accordingly.

The traction control system automatically comes on whenever you start your vehicle. To limit wheel spin, especially in slippery road conditions, you should always leave the system on. But you can turn the traction control system off if you ever need to.

Downloaded from www.Manualslib.com manuals search engine

You should turn the system off if your vehicle ever gets stuck in sand, mud or snow and rocking the vehicle is required. See *Rocking Your Vehicle to Get It Out on page 4-29* and *If You Are Stuck: In Sand, Mud, Ice or Snow on page 4-28*.

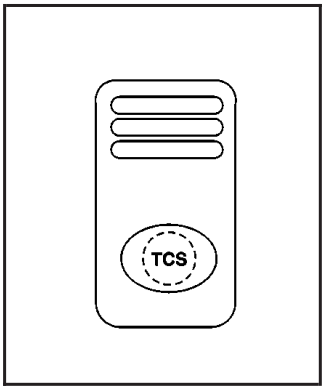

To turn the system off, press the TCS button located on the instrument panel switchbank.

If the system is limiting wheel spin when you press the button, the traction active message will go off, but the system will not turn off until there is no longer a current need to limit wheel spin. The TRAC OFF light will come on to remind you the system is off. You can turn the system back on at any time by pressing the button again. The traction control system warning message should go off.

Steering

Power Steering

If you lose power steering assist because the engine stops or the system is not functioning, you can steer but it will take much more effort.

Steering Tips

Driving on Curves

It is important to take curves at a reasonable speed.

A lot of the “driver lost control” accidents mentioned on the news happen on curves. Here is why:

Experienced driver or beginner, each of us is subject to the same laws of physics when driving on curves. The traction of the tires against the road surface makes it possible for the vehicle to change its path when you turn the front wheels. If there is no traction, inertia will keep the vehicle going in the same direction. If you have ever tried to steer a vehicle on wet ice, you will understand this.

The traction you can get in a curve depends on the condition of your tires and the road surface, the angle at which the curve is banked, and your speed. While you are in a curve, speed is the one factor you can control.

Downloaded from www.Manualslib.com manuals search engine

Suppose you are steering through a sharp curve. Then you suddenly apply the brakes. Both control systems — steering and braking — have to do their work where the tires meet the road. Unless you have four-wheel anti-lock brakes, adding the hard braking can demand too much of those places. You can lose control.

The same thing can happen if you are steering through a sharp curve and you suddenly accelerate. Those two control systems — steering and acceleration — can overwhelm those places where the tires meet the road and make you lose control. See *Traction Control System (TCS) on page 4-8*.

What should you do if this ever happens? Ease up on the brake or accelerator pedal, steer the vehicle the way you want it to go, and slow down.

Speed limit signs near curves warn that you should adjust your speed. Of course, the posted speeds are based on good weather and road conditions. Under less favorable conditions you will want to go slower.

If you need to reduce your speed as you approach a curve, do it before you enter the curve, while your front wheels are straight ahead.

Try to adjust your speed so you can “drive” through the curve. Maintain a reasonable, steady speed. Wait to accelerate until you are out of the curve, and then accelerate gently into the straightaway.

Steering in Emergencies

There are times when steering can be more effective than braking. For example, you come over a hill and find a truck stopped in your lane, or a car suddenly pulls out from nowhere, or a child darts out from between parked cars and stops right in front of you. You can avoid these problems by braking — if you can stop in time. But sometimes you cannot; there is not room. That is the time for evasive action — steering around the problem.

Your vehicle can perform very well in emergencies like these. First apply your brakes.

See *Braking on page 4-5*. It is better to remove as much speed as you can from a possible collision. Then steer around the problem, to the left or right depending on the space available.

Downloaded from www.Manualslib.com manuals search engine

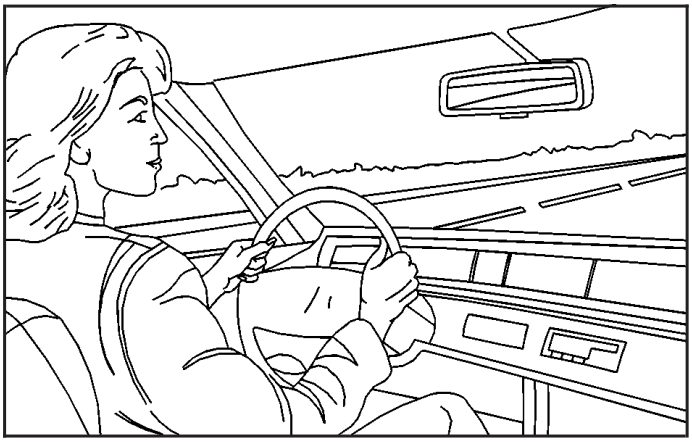

An emergency like this requires close attention and a quick decision. If you are holding the steering wheel at the recommended 9 and 3 o'clock positions, you can turn it a full 180 degrees very quickly without removing either hand. But you have to act fast, steer quickly, and just as quickly straighten the wheel once you have avoided the object.

The fact that such emergency situations are always possible is a good reason to practice defensive driving at all times and wear safety belts properly.

Off-Road Recovery

You may find that your right wheels have dropped off the edge of a road onto the shoulder while you're driving.

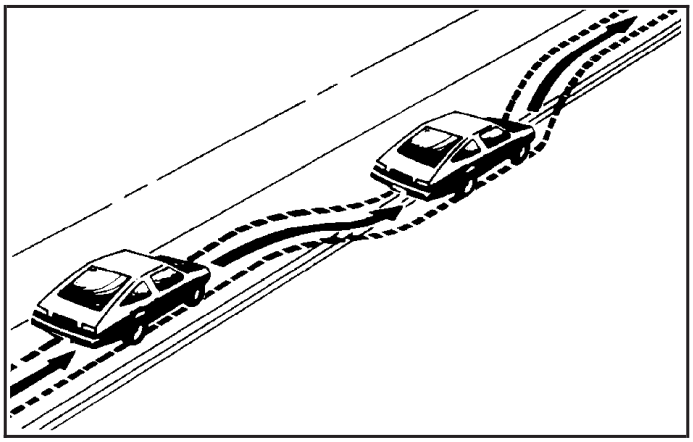

If the level of the shoulder is only slightly below the pavement, recovery should be fairly easy. Ease off the accelerator and then, if there is nothing in the way, steer so that your vehicle straddles the edge of the pavement. You can turn the steering wheel up to one-quarter turn until the right front tire contacts the pavement edge. Then turn your steering wheel to go straight down the roadway.

Downloaded from www.Manualslib.com manuals search engine

Passing

The driver of a vehicle about to pass another on a two-lane highway waits for just the right moment, accelerates, moves around the vehicle ahead, then goes back into the right lane again. A simple maneuver?

Not necessarily! Passing another vehicle on a two-lane highway is a potentially dangerous move, since the passing vehicle occupies the same lane as oncoming traffic for several seconds. A miscalculation, an error in judgment, or a brief surrender to frustration or anger can suddenly put the passing driver face to face with the worst of all traffic accidents — the head-on collision.

So here are some tips for passing:

- Drive ahead. Look down the road, to the sides and to crossroads for situations that might affect your passing patterns. If you have any doubt whatsoever about making a successful pass, wait for a better time.
- Watch for traffic signs, pavement markings and lines. If you can see a sign up ahead that might indicate a turn or an intersection, delay your pass. A broken center line usually indicates it is all right to pass, providing the road ahead is clear. Never cross a solid line on your side of the lane or a double solid line, even if the road seems empty of approaching traffic.
- Do not get too close to the vehicle you want to pass while you are awaiting an opportunity. For one thing, following too closely reduces your area of vision, especially if you are following a larger vehicle. Also, you will not have adequate space if the vehicle ahead suddenly slows or stops. Keep back a reasonable distance.
- When it looks like a chance to pass is coming up, start to accelerate but stay in the right lane and do not get too close. Time your move so you will be increasing speed as the time comes to move into the other lane. If the way is clear to pass, you will have a running start that more than makes up for the distance you would lose by dropping back. And if something happens to cause you to cancel your pass, you need only slow down and drop back again and wait for another opportunity.
- If other vehicles are lined up to pass a slow vehicle, wait your turn. But take care that someone is not trying to pass you as you pull out to pass the slow vehicle. Remember to glance over your shoulder and check the blind spot.

Downloaded from www.Manualslib.com manuals search engine

- Check your mirrors, glance over your shoulder, and start your left lane change signal before moving out of the right lane to pass. When you are far enough ahead of the passed vehicle to see its front in your inside mirror, activate your right lane change signal and move back into the right lane. Remember that your right outside mirror is convex. The vehicle you just passed may seem to be farther away from you than it really is.
- Try not to pass more than one vehicle at a time on two-lane roads. Reconsider before passing the next vehicle.
- Do not overtake a slowly moving vehicle too rapidly. Even though the brake lamps are not flashing, it may be slowing down or starting to turn.
- If you are being passed, make it easy for the following driver to get ahead of you. Perhaps you can ease a little to the right.

Loss of Control

Let us review what driving experts say about what happens when the three control systems — brakes, steering, and acceleration — do not have enough friction where the tires meet the road to do what the driver has asked.

In any emergency, do not give up. Keep trying to steer and constantly seek an escape route or area of less danger.

Skidding

In a skid, a driver can lose control of the vehicle. Defensive drivers avoid most skids by taking reasonable care suited to existing conditions, and by not overdriving those conditions. But skids are always possible.

The three types of skids correspond to your vehicle's three control systems. In the braking skid, your wheels are not rolling. In the steering or cornering skid, too much speed or steering in a curve causes tires to slip and lose cornering force. And in the acceleration skid, too much throttle causes the driving wheels to spin.

A cornering skid is best handled by easing your foot off the accelerator pedal.

If you have the Traction Control System, remember: It helps avoid only the acceleration skid. If you do not have this system, or if the system is off, then an acceleration skid is also best handled by easing your foot off the accelerator pedal.

If your vehicle starts to slide, ease your foot off the accelerator pedal and quickly steer the way you want the vehicle to go. If you start steering quickly enough, your vehicle may straighten out. Always be ready for a second skid if it occurs.

Downloaded from www.Manualslib.com manuals search engine

Of course, traction is reduced when water, snow, ice, gravel, or other material is on the road. For safety, you will want to slow down and adjust your driving to these conditions. It is important to slow down on slippery surfaces because stopping distance will be longer and vehicle control more limited.

While driving on a surface with reduced traction, try your best to avoid sudden steering, acceleration, or braking, including engine braking by shifting to a lower gear. Any sudden changes could cause the tires to slide. You may not realize the surface is slippery until your vehicle is skidding. Learn to recognize warning clues — such as enough water, ice, or packed snow on the road to make a mirrored surface — and slow down when you have any doubt.

If you have the anti-lock braking system, remember: It helps avoid only the braking skid. If you do not have anti-lock, then in a braking skid, where the wheels are no longer rolling, release enough pressure on the brakes to get the wheels rolling again. This restores steering control. Push the brake pedal down steadily when you have to stop suddenly. As long as the wheels are rolling, you will have steering control.

Driving at Night

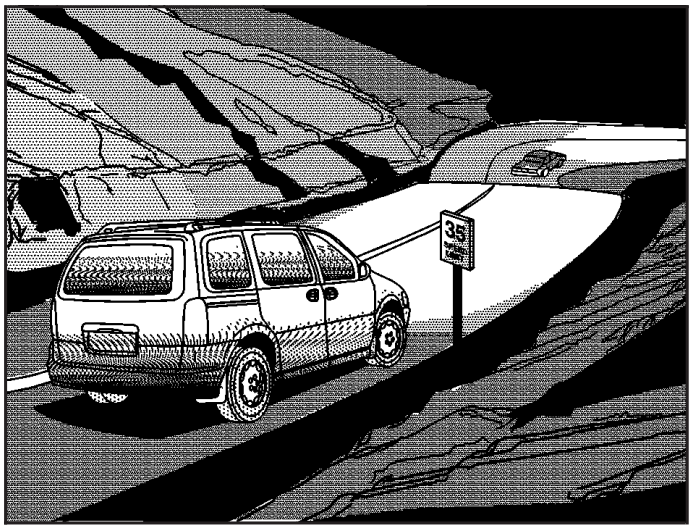

Night driving is more dangerous than day driving. One reason is that some drivers are likely to be impaired — by alcohol or drugs, with night vision problems, or by fatigue.

Downloaded from www.Manualslib.com manuals search engine

Here are some tips on night driving.

- Drive defensively.
- Do not drink and drive.
- Adjust your inside rearview mirror to reduce the glare from headlamps behind you.
- Since you cannot see as well, you may need to slow down and keep more space between you and other vehicles.
- Slow down, especially on higher speed roads. Your headlamps can light up only so much road ahead.
- In remote areas, watch for animals.
- If you are tired, pull off the road in a safe place and rest.

No one can see as well at night as in the daytime. But as we get older these differences increase. A 50-year-old driver may require at least twice as much light to see the same thing at night as a 20-year-old.

What you do in the daytime can also affect your night vision. For example, if you spend the day in bright sunshine you are wise to wear sunglasses. Your eyes will have less trouble adjusting to night. But if you are driving, do not wear sunglasses at night. They may cut down on glare from headlamps, but they also make a lot of things invisible.

You can be temporarily blinded by approaching headlamps. It can take a second or two, or even several seconds, for your eyes to re-adjust to the dark. When you are faced with severe glare, as from a driver who does not lower the high beams, or a vehicle with misaimed headlamps, slow down a little. Avoid staring directly into the approaching headlamps.

Keep your windshield and all the glass on your vehicle clean — inside and out. Glare at night is made much worse by dirt on the glass. Even the inside of the glass can build up a film caused by dust. Dirty glass makes lights dazzle and flash more than clean glass would, making the pupils of your eyes contract repeatedly.

Remember that your headlamps light up far less of a roadway when you are in a turn or curve. Keep your eyes moving; that way, it is easier to pick out dimly lighted objects. Just as your headlamps should be checked regularly for proper aim, so should your eyes be examined regularly. Some drivers suffer from night blindness — the inability to see in dim light — and are not even aware of it.

Downloaded from www.Manualslib.com manuals search engine

Driving in Rain and on Wet Roads

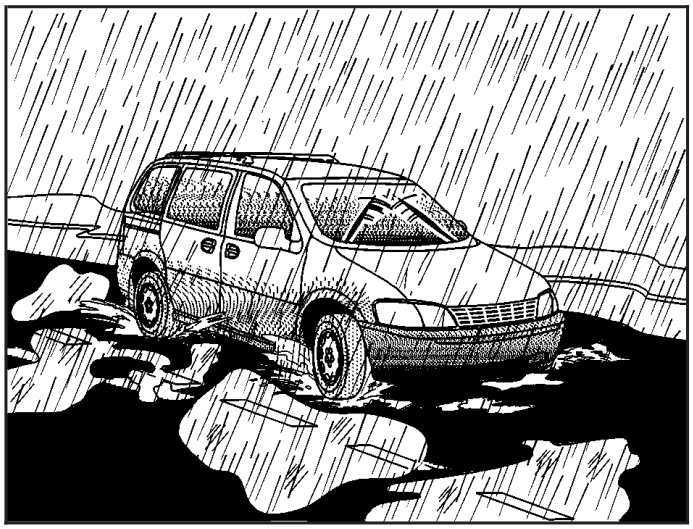

Rain and wet roads can mean driving trouble. On a wet road, you cannot stop, accelerate, or turn as well because your tire-to-road traction is not as good as on dry roads. And, if your tires do not have much tread left, you will get even less traction. It is always wise to go slower and be cautious if rain starts to fall while you are driving. The surface may get wet suddenly when your reflexes are tuned for driving on dry pavement.

The heavier the rain, the harder it is to see. Even if your windshield wiper blades are in good shape, a heavy rain can make it harder to see road signs and traffic signals, pavement markings, the edge of the road, and even people walking.

It is wise to keep your wiping equipment in good shape and keep your windshield washer tank filled with washer fluid. Replace your windshield wiper inserts when they show signs of streaking or missing areas on the windshield, or when strips of rubber start to separate from the inserts.

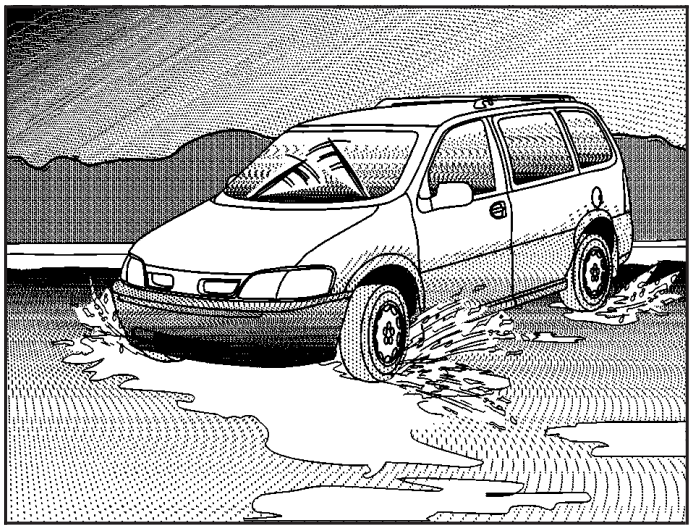

Downloaded from www.Manualslib.com manuals search engine

Driving too fast through large water puddles or even going through some car washes can cause problems, too. The water may affect your brakes. Try to avoid puddles. But if you cannot, try to slow down before you hit them.

⚠ CAUTION:

Wet brakes can cause accidents. They will not work as well in a quick stop and may cause pulling to one side. You could lose control of the vehicle.

After driving through a large puddle of water or a car wash, apply your brake pedal lightly until your brakes work normally.

Hydroplaning

Hydroplaning is dangerous. So much water can build up under your tires that they can actually ride on the water. This can happen if the road is wet enough and you are going fast enough. When your vehicle is hydroplaning, it has little or no contact with the road.

Hydroplaning does not happen often. But it can if your tires do not have much tread or if the pressure in one or more is low. It can happen if a lot of water is standing on the road. If you can see reflections from trees, telephone poles, or other vehicles, and raindrops dimple the water's surface, there could be hydroplaning.

Hydroplaning usually happens at higher speeds. There just is not a hard and fast rule about hydroplaning. The best advice is to slow down when it is raining.

Driving Through Deep Standing Water

Notice: **If you drive too quickly through deep puddles or standing water, water can come in through your engine's air intake and badly damage your engine. Never drive through water that is slightly lower than the underbody of your vehicle. If you cannot avoid deep puddles or standing water, drive through them very slowly.**

Downloaded from www.Manualslib.com manuals search engine

Driving Through Flowing Water

⚠ CAUTION:

Flowing or rushing water creates strong forces. If you try to drive through flowing water, as you might at a low water crossing, your vehicle can be carried away. As little as six inches of flowing water can carry away a smaller vehicle. If this happens, you and other vehicle occupants could drown. Do not ignore police warning signs, and otherwise be very cautious about trying to drive through flowing water.

Some Other Rainy Weather Tips

- Turn on your low-beam headlamps — not just your parking lamps — to help make you more visible to others.
- Besides slowing down, allow some extra following distance. And be especially careful when you pass another vehicle. Allow yourself more clear room ahead, and be prepared to have your view restricted by road spray.
- Have good tires with proper tread depth. See *Tires on page 5-52*.

Downloaded from www.Manualslib.com manuals search engine

City Driving

One of the biggest problems with city streets is the amount of traffic on them. You will want to watch out for what the other drivers are doing and pay attention to traffic signals.

Here are ways to increase your safety in city driving:

- Know the best way to get to where you are going. Get a city map and plan your trip into an unknown part of the city just as you would for a cross-country trip.
- Try to use the freeways that rim and crisscross most large cities. You will save time and energy. See *Freeway Driving on page 4-20*.
- Treat a green light as a warning signal. A traffic light is there because the corner is busy enough to need it. When a light turns green, and just before you start to move, check both ways for vehicles that have not cleared the intersection or may be running the red light.

Downloaded from www.Manualslib.com manuals search engine

Freeway Driving

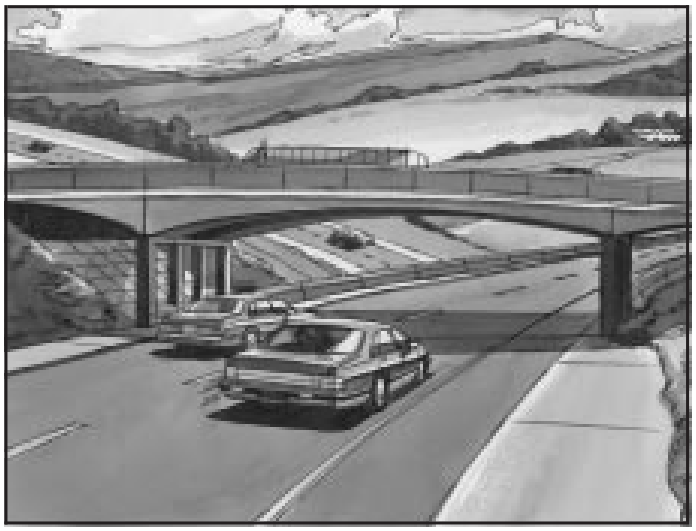

Mile for mile, freeways — also called thruways, parkways, expressways, turnpikes, or superhighways — are the safest of all roads. But they have their own special rules.

The most important advice on freeway driving is: Keep up with traffic and keep to the right. Drive at the same speed most of the other drivers are driving.

Too-fast or too-slow driving breaks a smooth traffic flow. Treat the left lane on a freeway as a passing lane.

At the entrance, there is usually a ramp that leads to the freeway. If you have a clear view of the freeway as you drive along the entrance ramp, you should begin to check traffic. Try to determine where you expect to blend with the flow. Try to merge into the gap at close to the prevailing speed. Switch on your turn signal, check your mirrors, and glance over your shoulder as often as necessary. Try to blend smoothly with the traffic flow.

Once you are on the freeway, adjust your speed to the posted limit or to the prevailing rate if it is slower. Stay in the right lane unless you want to pass.

Before changing lanes, check your mirrors. Then use your turn signal.

Just before you leave the lane, glance quickly over your shoulder to make sure there is not another vehicle in your blind spot.

Once you are moving on the freeway, make certain you allow a reasonable following distance. Expect to move slightly slower at night.

When you want to leave the freeway, move to the proper lane well in advance. If you miss your exit, do not, under any circumstances, stop and back up. Drive on to the next exit.

Downloaded from www.Manualslib.com manuals search engine

The exit ramp can be curved, sometimes quite sharply. The exit speed is usually posted.

Reduce your speed according to your speedometer, not to your sense of motion. After driving for any distance at higher speeds, you may tend to think you are going slower than you actually are.

Before Leaving on a Long Trip

Make sure you are ready. Try to be well rested. If you must start when you are not fresh — such as after a day's work — do not plan to make too many miles that first part of the journey. Wear comfortable clothing and shoes you can easily drive in.

Is your vehicle ready for a long trip? If you keep it serviced and maintained, it is ready to go. If it needs service, have it done before starting out. Of course, you will find experienced and able service experts in GM dealerships all across North America. They will be ready and willing to help if you need it.

Here are some things you can check before a trip:

- *Windshield Washer Fluid:* Is the reservoir full? Are all windows clean inside and outside?
- *Wiper Blades:* Are they in good shape?
- *Fuel, Engine Oil, Other Fluids:* Have you checked all levels?
- *Lamps:* Are they all working? Are the lenses clean?
- *Tires:* They are vitally important to a safe, trouble-free trip. Is the tread good enough for long-distance driving? Are the tires all inflated to the recommended pressure?
- *Weather Forecasts:* What is the weather outlook along your route? Should you delay your trip a short time to avoid a major storm system?
- *Maps:* Do you have up-to-date maps?

Downloaded from www.Manualslib.com manuals search engine

Highway Hypnosis

Is there actually such a condition as highway hypnosis? Or is it just plain falling asleep at the wheel? Call it highway hypnosis, lack of awareness, or whatever.

There is something about an easy stretch of road with the same scenery, along with the hum of the tires on the road, the drone of the engine, and the rush of the wind against the vehicle that can make you sleepy. Do not let it happen to you! If it does, your vehicle can leave the road in less than a second, and you could crash and be injured.

What can you do about highway hypnosis? First, be aware that it can happen.

Then here are some tips:

- Make sure your vehicle is well ventilated, with a comfortably cool interior.
- Keep your eyes moving. Scan the road ahead and to the sides. Check your mirrors and your instruments frequently.
- If you get sleepy, pull off the road into a rest, service, or parking area and take a nap, get some exercise, or both. For safety, treat drowsiness on the highway as an emergency.

Hill and Mountain Roads

Driving on steep hills or mountains is different from driving in flat or rolling terrain.

Downloaded from www.Manualslib.com manuals search engine

If you drive regularly in steep country, or if you are planning to visit there, here are some tips that can make your trips safer and more enjoyable.

- Keep your vehicle in good shape. Check all fluid levels and also the brakes, tires, cooling system, and transaxle. These parts can work hard on mountain roads.
- Know how to go down hills. The most important thing to know is this: let your engine do some of the slowing down. Shift to a lower gear when you go down a steep or long hill.

⚠ CAUTION:

If you do not shift down, your brakes could get so hot that they would not work well. You would then have poor braking or even none going down a hill. You could crash. Shift down to let your engine assist your brakes on a steep downhill slope.

⚠ CAUTION:

Coasting downhill in NEUTRAL (N) or with the ignition off is dangerous. Your brakes will have to do all the work of slowing down. They could get so hot that they would not work well. You would then have poor braking or even none going down a hill. You could crash. Always have your engine running and your vehicle in gear when you go downhill.

- Know how to go uphill. You may want to shift down to a lower gear. The lower gears help cool your engine and transaxle, and you can climb the hill better.
- Stay in your own lane when driving on two-lane roads in hills or mountains. Do not swing wide or cut across the center of the road. Drive at speeds that let you stay in your own lane.
- As you go over the top of a hill, be alert. There could be something in your lane, like a stalled car or an accident.
- You may see highway signs on mountains that warn of special problems. Examples are long grades, passing or no-passing zones, a falling rocks area, or winding roads. Be alert to these and take appropriate action.

Downloaded from www.Manualslib.com manuals search engine

Winter Driving

Here are some tips for winter driving:

- Have your vehicle in good shape for winter.
- You may want to put winter emergency supplies in your vehicle.

Also see *Tires on page 5-52*.

Include an ice scraper, a small brush or broom, a supply of windshield washer fluid, a rag, some winter outer clothing, a small shovel, a flashlight, a red cloth, and a couple of reflective warning triangles. And, if you will be driving under severe conditions, include a small bag of sand, a piece of old carpet, or a couple of burlap bags to help provide traction. Be sure you properly secure these items in your vehicle.

Downloaded from www.Manualslib.com manuals search engine

Driving on Snow or Ice

Most of the time, those places where your tires meet the road probably have good traction.

However, if there is snow or ice between your tires and the road, you can have a very slippery situation. You will have a lot less traction, or grip, and will need to be very careful.

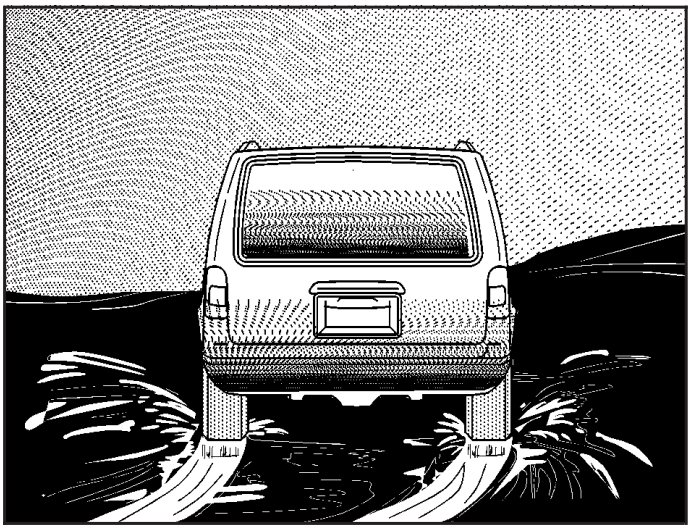

What is the worst time for this? Wet ice. Very cold snow or ice can be slick and hard to drive on. But wet ice can be even more trouble because it may offer the least traction of all. You can get wet ice when it is about freezing (32°F; 0°C) and freezing rain begins to fall. Try to avoid driving on wet ice until salt and sand crews can get there.

Whatever the condition — smooth ice, packed, blowing or loose snow — drive with caution.

If you have traction control, it will improve your ability to accelerate when driving on a slippery road. But you can turn the traction system off if you ever need to. You should turn the system off if your vehicle ever gets stuck in sand, mud, ice or snow. See *If You Are Stuck: In Sand, Mud, Ice or Snow on page 4-28*. Even though your vehicle has a traction system, you will want to slow down and adjust your driving to the road conditions. Under certain conditions, you may want to turn the traction control system off, such as when driving through deep snow and loose gravel, to help maintain vehicle motion at lower speeds. See *Traction Control System (TCS) on page 4-8*.

If you do not have a traction system, accelerate gently. Try not to break the fragile traction. If you accelerate too fast, the drive wheels will spin and polish the surface under the tires even more.

Downloaded from www.Manualslib.com manuals search engine

Unless you have the anti-lock braking system, you will want to brake very gently, too. If you do have anti-lock, see *Anti-Lock Brake System (ABS) on page 4-6*. This system improves your vehicle's stability when you make a hard stop on a slippery road. Whether you have the anti-lock braking system or not, you will want to begin stopping sooner than you would on dry pavement. Without anti-lock brakes, if you feel your vehicle begin to slide, let up on the brakes a little. Push the brake pedal down steadily to get the most traction you can.

Remember, unless you have anti-lock, if you brake so hard that your wheels stop rolling, you will just slide. Brake so your wheels always keep rolling and you can still steer.

- Whatever your braking system, allow greater following distance on any slippery road.
- Watch for slippery spots. The road might be fine until you hit a spot that is covered with ice. On an otherwise clear road, ice patches may appear in shaded areas where the sun cannot reach: around clumps of trees, behind buildings, or under bridges. Sometimes the surface of a curve or an overpass may remain icy when the surrounding roads are clear. If you see a patch of ice ahead of you, brake before you are on it. Try not to brake while you are actually on the ice, and avoid sudden steering maneuvers.

If You Are Caught in a Blizzard

If you are stopped by heavy snow, you could be in a serious situation. You should probably stay with your vehicle unless you know for sure that you are near help and you can hike through the snow. Here are some things to do to summon help and keep yourself and your passengers safe:

- Turn on your hazard flashers.
- Tie a red cloth to your vehicle to alert police that you have been stopped by the snow.

Downloaded from www.Manualslib.com manuals search engine

- Put on extra clothing or wrap a blanket around you. If you have no blankets or extra clothing, make body insulators from newspapers, burlap bags, rags, floor mats — anything you can wrap around yourself or tuck under your clothing to keep warm.

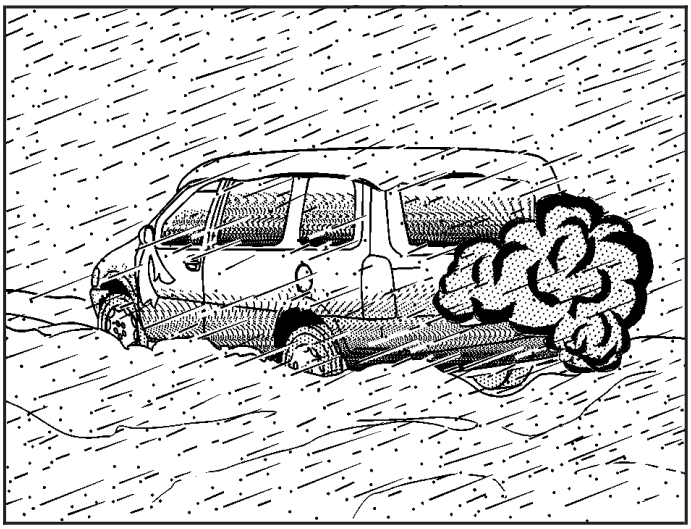

You can run the engine to keep warm, but be careful.

⚠ CAUTION:

Snow can trap exhaust gases under your vehicle. This can cause deadly CO (carbon monoxide) gas to get inside. CO could overcome you and kill you. You cannot see it or smell it, so you might not know it is in your vehicle. Clear away snow from around the base of your vehicle, especially any that is blocking your exhaust pipe. And check around again from time to time to be sure snow does not collect there.

Open a window just a little on the side of the vehicle that is away from the wind. This will help keep CO out.

Run your engine only as long as you must. This saves fuel. When you run the engine, make it go a little faster than just idle. That is, push the accelerator slightly. This uses less fuel for the heat that you get and it keeps the battery charged. You will need a well-charged battery to restart the vehicle, and possibly for signaling later on with your headlamps. Let the heater run for a while.

Downloaded from www.Manualslib.com manuals search engine

Then, shut the engine off and close the window almost all the way to preserve the heat. Start the engine again and repeat this only when you feel really uncomfortable from the cold. But do it as little as possible. Preserve the fuel as long as you can. To help keep warm, you can get out of the vehicle and do some fairly vigorous exercises every half hour or so until help comes.

If You Are Stuck: In Sand, Mud, Ice or Snow

In order to free your vehicle when it is stuck, you will need to spin the wheels, but you do not want to spin your wheels too fast. The method known as rocking can help you get out when you are stuck, but you must use caution.

⚠ CAUTION:

If you let your tires spin at high speed, they can explode, and you or others could be injured. And, the transaxle or other parts of the vehicle can overheat. That could cause an engine compartment fire or other damage. When you are stuck, spin the wheels as little as possible. Do not spin the wheels above 35 mph (55 km/h) as shown on the speedometer.

Notice: **Spinning your wheels can destroy parts of your vehicle as well as the tires. If you spin the wheels too fast while shifting your transaxle back and forth, you can destroy your transaxle. See *Rocking Your Vehicle to Get It Out on page 4-29*.**

For information about using tire chains on your vehicle, see *Tire Chains on page 5-65*.

Downloaded from www.Manualslib.com manuals search engine

Rocking Your Vehicle to Get It Out

First, turn your steering wheel left and right. That will clear the area around your front wheels. If your vehicle has traction control, you should turn your traction control system off. See *Traction Control System (TCS) on page 4-8*. Then shift back and forth between REVERSE (R) and a forward gear, spinning the wheels as little as possible. Release the accelerator pedal while you shift, and press lightly on the accelerator pedal when the transaxle is in gear. By slowly spinning your wheels in the forward and reverse directions, you will cause a rocking motion that may free your vehicle. If that does not get you out after a few tries, you may need to be towed out. If you do need to be towed out, see *Towing Your Vehicle on page 4-34*.

Loading Your Vehicle

It is very important to know how much weight your vehicle can carry. This weight is called the vehicle capacity weight and includes the weight of all occupants, cargo, and all nonfactory-installed options. Two labels on your vehicle show how much weight it may properly carry, the Tire and Loading Information label and the Certification/Tire label.

⚠ CAUTION:

Do not load your vehicle any heavier than the Gross Vehicle Weight Rating (GVWR), or either the maximum front or rear Gross Axle Weight Rating (GAWR). If you do, parts on your vehicle can break, and it can change the way your vehicle handles. These could cause you to lose control and crash. Also, overloading can shorten the life of your vehicle.

Downloaded from www.Manualslib.com manuals search engine

Tire and Loading Information Label

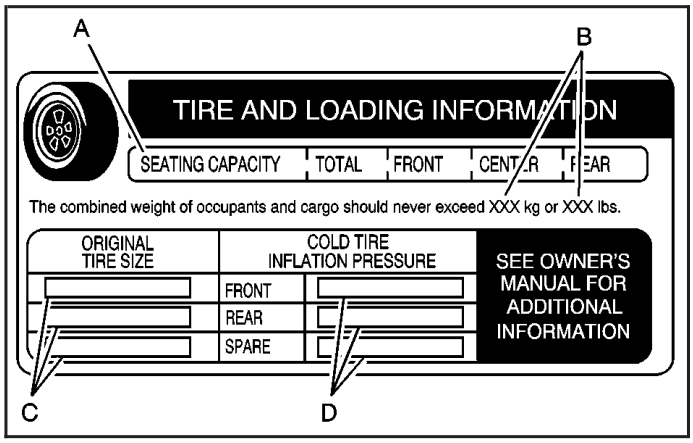

Label Example

A vehicle specific Tire and Loading Information label is attached to the center pillar (B-pillar). With the driver's door open, you will find the label attached below the door lock post (striker). The tire and loading information label shows the number of occupant seating positions (A), and the maximum vehicle capacity weight (B) in kilograms and pounds.

The Tire and Loading Information label also shows the size of the original equipment tires (C) and the recommended cold tire inflation pressures (D). For more information on tires and inflation see *Tires on page 5-52* and *Inflation - Tire Pressure on page 5-58*.

There is also important loading information on the vehicle Certification/Tire label. It tells you the Gross Vehicle Weight Rating (GVWR) and the Gross Axle Weight Rating (GAWR) for the front and rear axle. See "Certification/Tire Label" later in this section.

Steps for Determining Correct Load Limit

1. Locate the statement "The combined weight of occupants and cargo should never exceed XXX kg or XXX pounds" on your vehicle's placard.
2. Determine the combined weight of the driver and passengers that will be riding in your vehicle.
3. Subtract the combined weight of the driver and passengers from XXX kilograms or XXX pounds.

Downloaded from www.Manualslib.com manuals search engine

4. The resulting figure equals the available amount of cargo and luggage load capacity. For example, if the “XXX” amount equals 1400 lbs and there will be five 150 lb passengers in your vehicle, the amount of available cargo and luggage load capacity is 650 lbs (1400 – 750 (5 x 150) = 650 lbs).
5. Determine the combined weight of luggage and cargo being loaded on the vehicle. That weight may not safely exceed the available cargo and luggage load capacity calculated in Step 4.
6. If your vehicle will be towing a trailer, the load from your trailer will be transferred to your vehicle. Consult this manual to determine how this reduces the available cargo and luggage load capacity for your vehicle.

See *Towing a Trailer on page 4-36* for important information on towing a trailer, towing safety rules, and trailering tips.

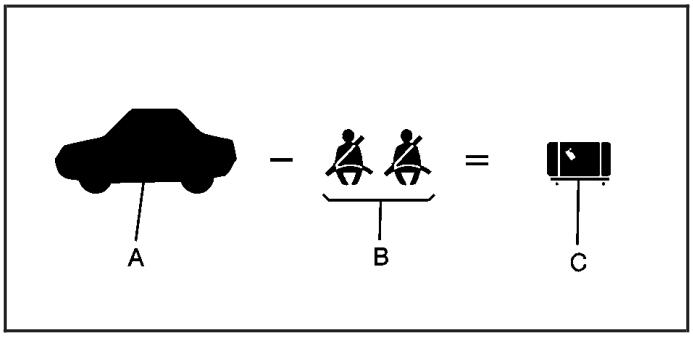

Example 1

Item	Description	Total
A	Vehicle Capacity Weight for Example 1 =	1,000 lbs (453 kg)
B	Subtract Occupant Weight 150 lbs (68 kg) × 2 =	300 lbs (136 kg)
C	Available Occupant and Cargo Weight =	700 lbs (317 kg)

Downloaded from www.Manualslib.com manuals search engine

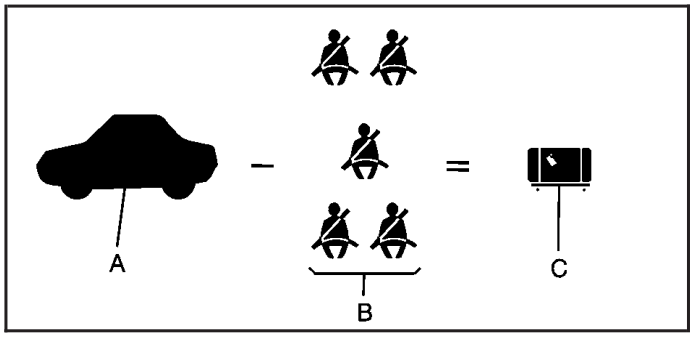

Example 2

Item	Description	Total
A	Vehicle Capacity Weight for Example 2 =	1,000 lbs (453 kg)
B	Subtract Occupant Weight 150 lbs (68 kg) × 5 =	750 lbs (340 kg)
C	Available Cargo Weight =	250 lbs (113 kg)

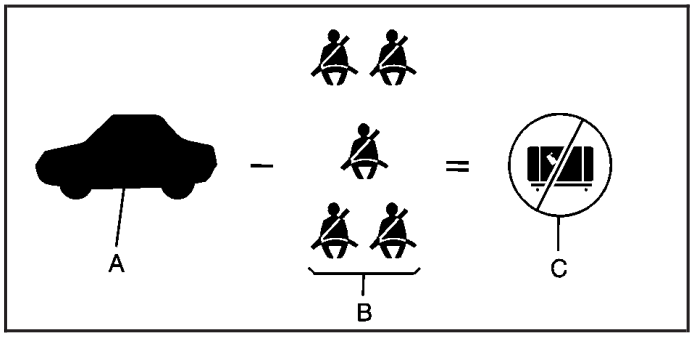

Example 3

Item	Description	Total
A	Vehicle Capacity Weight for Example 3 =	1,000 lbs (453 kg)
B	Subtract Occupant Weight 200 lbs (91 kg) × 5 =	1,000 lbs (453 kg)
C	Available Cargo Weight =	0 lbs (0 kg)

Refer to your vehicle's tire and loading information label for specific information about your vehicle's capacity weight and seating positions. The combined weight of the driver, passengers, and cargo should never exceed your vehicle's capacity weight.

Downloaded from www.Manualslib.com manuals search engine

Certification/Tire Label

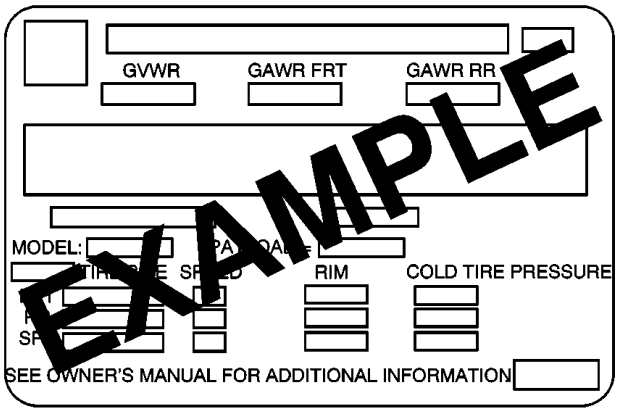

United States version shown, Canada similar

The Certification/Tire label is found on the rear edge of the driver's door.

The label shows the gross weight capacity of your vehicle. This is called the Gross Vehicle Weight Rating (GVWR). The GVWR includes the weight of the vehicle, all occupants, fuel, and cargo.

The Certification/Tire label also tells you the maximum weights for the front and rear axles, called the Gross Axle Weight Rating (GAWR). To find out the actual loads on your front and rear axles, you need to go to a weigh station and weigh your vehicle. Your dealer can help you with this. Be sure to spread out your load equally on both sides of the centerline.

Never exceed the GVWR for your vehicle or the GAWR for either the front or rear axle.

⚠ CAUTION:

Do not load your vehicle any heavier than the Gross Vehicle Weight Rating (GVWR), or either the maximum front or rear Gross Axle Weight Rating (GAWR). If you do, parts on your vehicle can break, and it can change the way your vehicle handles. These could cause you to lose control and crash. Also, overloading can shorten the life of your vehicle.

Downloaded from www.Manualslib.com manuals search engine

Notice: **Overloading your vehicle may cause damage. Repairs would not be covered by your warranty. Do not overload your vehicle.**

If you put things inside your vehicle — like suitcases, tools, packages, or anything else, they will go as fast as the vehicle goes. If you have to stop or turn quickly, or if there is a crash, they will keep going.

⚠ CAUTION:

Things you put inside your vehicle can strike and injure people in a sudden stop or turn, or in a crash.

- **Put things in the cargo area of your vehicle. Try to spread the weight evenly.**
- **Never stack heavier things, like suitcases, inside the vehicle so that some of them are above the tops of the seats.**
- **Do not leave an unsecured child restraint in your vehicle.**
- **When you carry something inside the vehicle, secure it whenever you can.**
- **Do not leave a seat folded down unless you need to.**

Towing

Towing Your Vehicle

Consult your dealer or a professional towing service if you need to have your disabled vehicle towed. See *Roadside Assistance Program on page 7-5*.

If you want to tow your vehicle behind another vehicle for recreational purposes (such as behind a motorhome), see “Recreational Vehicle Towing” following.

Recreational Vehicle Towing

Recreational vehicle towing means towing your vehicle behind another vehicle – such as behind a motorhome. The two most common types of recreational vehicle towing are known as “dinghy towing” (towing your vehicle with all four wheels on the ground) and “dolly towing” (towing your vehicle with two wheels on the ground and two wheels up on a device know as a “dolly”).

With the proper preparation and equipment, many vehicles can be towed in these ways. See “Dinghy Towing” and “Dolly Towing,” following.

Downloaded from www.Manualslib.com manuals search engine

Here are some important things to consider before you do recreational vehicle towing:

- What's the towing capacity of the towing vehicle? Be sure you read the tow vehicle manufacturer's recommendations.
- How far will you tow? Some vehicles have restrictions on how far and how long they can tow.
- Do you have the proper towing equipment? See your dealer or trailering professional for additional advice and equipment recommendations.
- Is your vehicle ready to be towed? Just as you would prepare your vehicle for a long trip, you'll want to make sure your vehicle is prepared to be towed. See *Before Leaving on a Long Trip on page 4-21*.

Dinghy Towing

Your vehicle was not designed to be towed with all of its wheels on the ground. If you have a two-wheel-drive vehicle, it can be towed with two of its wheels on the ground. See "Dolly Towing" following.

Dolly Towing

If you have a two-wheel-drive vehicle, it can be towed with two of its wheels on the ground. To dolly tow your vehicle, do the following:

1. Put the front wheels on a dolly.
2. Put the vehicle in PARK (P).
3. Set the parking brake and then remove the key.
4. Clamp the steering wheel in a straight-ahead position with a clamping device designed for towing.
5. Release the parking brake.

Level Control

On vehicles equipped with automatic level control, the rear of the vehicle is automatically kept level as you load or unload your vehicle. However, you should still not exceed the GVWR or the GAWR. See *Loading Your Vehicle on page 4-29*.

You may hear the compressor operating when you load or unload your vehicle, and periodically as the system self-adjusts. This is normal. The compressor should operate for brief periods of time. If the sound continues for an extended period of time, your vehicle needs service.

Using heavier suspension components to get added durability might not change your weight ratings. Ask your dealer to help you load your vehicle the right way.

Downloaded from www.Manualslib.com manuals search engine

Towing a Trailer

⚠ CAUTION:

If you do not use the correct equipment and drive properly, you can lose control when you pull a trailer. For example, if the trailer is too heavy, the brakes may not work well — or even at all. You and your passengers could be seriously injured. You may also damage your vehicle; the resulting repairs would not be covered by your warranty. Pull a trailer only if you have followed all the steps in this section. Ask your dealer for advice and information about towing a trailer with your vehicle.

Notice: **Pulling a trailer improperly can damage your vehicle and result in costly repairs that would not be covered by your warranty. Always follow the instructions in this section and check with your dealer for more information about towing a trailer with your vehicle.**

Your vehicle can tow a trailer. To identify what the vehicle trailering capacity is for your vehicle, you should read the information in “Weight of the Trailer” that appears later in this section. But trailering is different than just driving your vehicle by itself. Trailering means changes in handling, acceleration, braking, durability, and fuel economy. Successful, safe trailering takes correct equipment, and it has to be used properly.

That is the reason for this section. In it are many time-tested, important trailering tips and safety rules. Many of these are important for your safety and that of your passengers. So please read this section carefully before you pull a trailer.

Load-pulling components such as the engine, transaxle, wheel assemblies and tires are forced to work harder against the drag of the added weight. The engine is required to operate at relatively higher speeds and under greater loads, generating extra heat. The trailer also adds considerably to wind resistance, increasing the pulling requirements.

Downloaded from www.Manualslib.com manuals search engine

If You Do Decide To Pull A Trailer

If you do, here are some important points:

- There are many different laws, including speed limit restrictions, having to do with trailering. Make sure your rig will be legal, not only where you live but also where you will be driving. A good source for this information can be state or provincial police.
- Consider using a sway control. See “Hitches” later in this section.
- Do not tow a trailer at all during the first 500 miles (800 km) your new vehicle is driven. Your engine, axle or other parts could be damaged.
- During the first 500 miles (800 km) that you tow a trailer, do not drive over 50 mph (80 km/h) and do not make starts at full throttle. This helps your engine and other parts of your vehicle wear in at the heavier loads.
- You can use THIRD (3) or, as you need to, a lower gear when towing a trailer. Operating your vehicle in THIRD (3) when towing a trailer will minimize heat buildup and extend the life of your transaxle.

Three important considerations have to do with weight:

- Weight of the trailer
- Weight of the trailer tongue
- Weight on your vehicle’s tires

Weight of the Trailer

How heavy can a trailer safely be?

It should never weigh more than 1,400 lbs (630 kg) with up to six occupants in the vehicle or more than 2,000 lbs (900 kg) with up to two occupants. If you have the optional trailer towing package, your vehicle can tow up to 2,900 lbs (1 300 kg) with up to six occupants or up to 3,500 lbs (1 575 kg) with up to two occupants. But even that can be too heavy.

It depends on how you plan to use your rig. For example, speed, altitude, road grades, outside temperature and how much your vehicle is used to pull a trailer are all important. And, it can also depend on any special equipment that you have on your vehicle.

You can ask your dealer for our trailering information or advice, or you can write us at:

Pontiac - GMC Customer Assistance Center
P.O. Box 33172
Detroit, MI 48232-5172

In Canada, write to:

General Motors of Canada Limited
Customer Communication Centre, 163-005
1908 Colonel Sam Drive
Oshawa, Ontario L1H 8P7

Downloaded from www.Manualslib.com manuals search engine

Weight of the Trailer Tongue

The tongue load (A) of any trailer is an important weight to measure because it affects the total or gross weight of your vehicle. The Gross Vehicle Weight (GVW) includes the curb weight of the vehicle, any cargo you may carry in it, and the people who will be riding in the vehicle. If you have a lot of options, passengers, or cargo in your vehicle, it will reduce the tongue weight your vehicle can carry, which will also reduce the trailer weight your vehicle can tow. And if you will tow a trailer, you must add the tongue load to the GVW because your vehicle will be carrying that weight, too. See *Loading Your Vehicle on page 4-29* for more information about your vehicle's maximum load capacity.

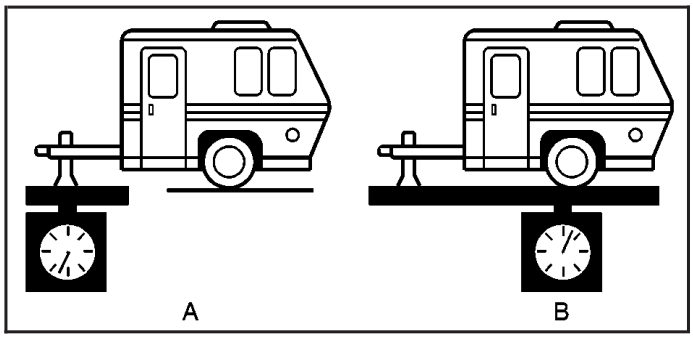

If you are using a weight-carrying or a weight-distributing hitch, the trailer tongue weight (A) should be 10 percent to 15 percent of the total loaded trailer weight (B). Do not exceed the maximum allowable tongue weight for your vehicle.

After you have loaded your trailer, weigh the trailer and then the tongue, separately, to see if the weights are proper. If they are not, you may be able to get them right simply by moving some items around in the trailer.

Total Weight on Your Vehicle's Tires

Be sure your vehicle's tires are inflated to the upper limit for cold tires. You will find these numbers on the Certification/Tire label at the rear edge of the driver's door, or see *Loading Your Vehicle on page 4-29*. Then be sure you do not go over the GVW limit for your vehicle, including the weight of the trailer tongue

Downloaded from www.Manualslib.com manuals search engine

Hitches

It's important to have the correct hitch equipment. Crosswinds, large trucks going by and rough roads are a few reasons why you will need the right hitch. Here are some rules to follow:

- The bumpers on your vehicle are not intended for hitches. Do not attach rental hitches or other bumper-type hitches to them. Use only a frame-mounted hitch that does not attach to the bumper.
- If you will be pulling a trailer that, when loaded, will weigh more than 2,000 lbs (900 kg), be sure to use a properly mounted, weight-carrying hitch and sway control of the proper size. This equipment is very important for proper vehicle loading and good handling when you are driving.
- Will you have to make any holes in the body of your vehicle when you install a trailer hitch?

  If you do, remember to seal the holes when you remove the hitch. If you do not seal them, deadly carbon monoxide (CO) from your exhaust can get into your vehicle. See *Engine Exhaust on page 2-40*. Dirt and water can, too.

Safety Chains

You should always attach chains between your vehicle and your trailer. Cross the safety chains under the tongue of the trailer to help prevent the tongue from contacting the road if it becomes separated from the hitch. Instructions about safety chains may be provided by the hitch manufacturer or by the trailer manufacturer. Follow the manufacturer's recommendation for attaching safety chains and do not attach them to the bumper. Always leave just enough slack so you can turn with your rig. Never allow safety chains to drag on the ground.

Trailer Brakes

If your trailer weighs more than 1,000 lbs (450 kg) loaded, then it needs its own brakes - and they must be adequate. Be sure to read and follow the instructions for the trailer brakes so you will be able to install, adjust and maintain them properly.

Because your vehicle may have anti-lock brakes, do not try to tap into your vehicle's brake system. If you do, both brake systems will not work well, or at all.

Downloaded from www.Manualslib.com manuals search engine

Driving with a Trailer

⚠ CAUTION:

If you have a rear-most window open and you pull a trailer with your vehicle, carbon monoxide (CO) could come into your vehicle. You cannot see or smell CO. It can cause unconsciousness or death. See *Engine Exhaust on page 2-40*. To maximize your safety when towing a trailer:

- **Have your exhaust system inspected for leaks, and make necessary repairs before starting on your trip.**
- **Keep the rear-most windows closed.**
- **If exhaust does come into your vehicle through a window in the rear or another opening, drive with your front, main heating or cooling system on and with the fan on any speed. This will bring fresh, outside air into your vehicle. Do not use the climate control setting for maximum air because it only recirculates the air inside your vehicle. See *Climate Control System on page 3-26*.**

Towing a trailer requires a certain amount of experience. Before setting out for the open road, you will want to get to know your rig. Acquaint yourself with the feel of handling and braking with the added weight of the trailer. And always keep in mind that the vehicle you are driving is now a good deal longer and not nearly as responsive as your vehicle is by itself.

Before you start, check all trailer hitch parts and attachments, safety chains, electrical connector, lamps, tires and mirror adjustment. If the trailer has electric brakes, start your vehicle and trailer moving and then apply the trailer brake controller by hand to be sure the brakes are working. This lets you check your electrical connection at the same time.

During your trip, check occasionally to be sure that the load is secure, and that the lamps and any trailer brakes are still working.

Downloaded from www.Manualslib.com manuals search engine

Following Distance

Stay at least twice as far behind the vehicle ahead as you would when driving your vehicle without a trailer. This can help you avoid situations that require heavy braking and sudden turns.

Passing

You will need more passing distance up ahead when you are towing a trailer. And, because you are a good deal longer, you will need to go much farther beyond the passed vehicle before you can return to your lane.

Backing Up

Hold the bottom of the steering wheel with one hand. Then, to move the trailer to the left, just move that hand to the left. To move the trailer to the right, move your hand to the right. Always back up slowly and, if possible, have someone guide you.

Making Turns

Notice: **Making very sharp turns while trailering could cause the trailer to come in contact with the vehicle. Your vehicle could be damaged. Avoid making very sharp turns while trailering.**

When you are turning with a trailer, make wider turns than normal. Do this so your trailer will not strike soft shoulders, curbs, road signs, trees or other objects. Avoid jerky or sudden maneuvers. Signal well in advance.

Turns Signals When Towing a Trailer

When you tow a trailer, your vehicle has to have extra wiring.

The arrows on your instrument panel will flash whenever you signal a turn or lane change. Properly hooked up, the trailer lamps will also flash, telling other drivers you are about to turn, change lanes or stop.

When towing a trailer, the arrows on your instrument panel will flash for turns even if the bulbs on the trailer are burned out. Thus, you may think drivers behind you are seeing your signal when they are not. It is important to check occasionally to be sure the trailer bulbs are still working.

Downloaded from www.Manualslib.com manuals search engine

Driving On Grades

Reduce speed and shift to a lower gear before you start down a long or steep downgrade. If you do not shift down, you might have to use your brakes so much that they would get hot and no longer work well.

If you are towing a trailer that weighs more than 1,000 lbs (450 kg), you may prefer to drive in THIRD (3) instead of AUTOMATIC OVERDRIVE (D) or, as you need to, a lower gear. This will minimize heat build-up and extend the life of your transaxle.

Parking on Hills

⚠ CAUTION:

You really should not park your vehicle, with a trailer attached, on a hill. If something goes wrong, your rig could start to move. People can be injured, and both your vehicle and the trailer can be damaged.

But if you ever have to park your rig on a hill, do the following:

1. Apply your regular brakes, but do not shift into PARK (P) yet.
2. Have someone place chocks under the trailer wheels.
3. When the wheel chocks are in place, release the regular brakes until the chocks absorb the load.
4. Reapply the regular brakes. Then apply your parking brake, and then shift to PARK (P).
5. Release the regular brakes.

Downloaded from www.Manualslib.com manuals search engine

When You Are Ready to Leave After Parking on a Hill

1. Apply your regular brakes and hold the pedal down while you:
   - Start your engine.
   - Shift into a gear.
   - Release the parking brake.
2. Let up on the brake pedal.
3. Drive slowly until the trailer is clear of the chocks.
4. Stop and have someone pick up and store the chocks.

Maintenance When Trailer Towing

Your vehicle will need service more often when you are pulling a trailer. See the Maintenance Schedule for more on this. Things that are especially important in trailer operation are automatic transaxle fluid, engine oil, belts, cooling system and brake system. Each of these is covered in this manual, and the Index will help you find them quickly. If you are trailering, it is a good idea to review these sections before you start your trip.

Check periodically to see that all hitch nuts and bolts are tight.

Trailer Wiring Harness

Your vehicle has a trailer wiring harness located at the rear of your vehicle. To use the trailer wiring harness you need a converter kit. Contact your dealer for more information.

Downloaded from www.Manualslib.com manuals search engine

NOTES

Downloaded from www.Manualslib.com manuals search engine

Section 5 Service and Appearance Care

Service 5-3
Doing Your Own Service Work 5-4
Adding Equipment to the Outside of Your Vehicle 5-5

Fuel 5-5
Gasoline Octane 5-5
Gasoline Specifications 5-5
California Fuel 5-6
Additives 5-6
Fuels in Foreign Countries 5-7
Filling Your Tank 5-8
Filling a Portable Fuel Container 5-10

Checking Things Under the Hood 5-10
Hood Release 5-11
Engine Compartment Overview 5-12
Engine Oil 5-13
Engine Oil Life System 5-16
Engine Air Cleaner/Filter 5-17
Automatic Transaxle Fluid 5-19
Engine Coolant 5-22
Radiator Pressure Cap 5-24
Engine Overheating 5-25
Overheated Engine Protection Operating Mode 5-26
Cooling System 5-27
Power Steering Fluid 5-32
Windshield Washer Fluid 5-34
Brakes 5-35
Battery 5-38
Jump Starting 5-39

Bulb Replacement 5-44
Halogen Bulbs 5-44
Headlamps 5-44
Front Turn Signal, Sidemarker and Parking Lamps 5-46
Taillamps, Turn Signal, Stoplamps and Back-up Lamps 5-48
Replacement Bulbs 5-50

Windshield Wiper Blade Replacement 5-50

Tires 5-52
Tire Sidewall Labelling 5-53
Tire Terminology and Definitions 5-55
Inflation - Tire Pressure 5-58
Tire Inspection and Rotation 5-59
When It Is Time for New Tires 5-60
Buying New Tires 5-61
Uniform Tire Quality Grading 5-62
Wheel Alignment and Tire Balance 5-63
Wheel Replacement 5-64
Tire Chains 5-65

Downloaded from www.Manualslib.com manuals search engine

Section 5 Service and Appearance Care

Accessory Inflator 5-66
If a Tire Goes Flat 5-68
Changing a Flat Tire 5-68
Removing the Spare Tire and Tools 5-70
Removing the Flat Tire and Installing the Spare Tire 5-73
Secondary Latch System 5-78
Storing a Flat or Spare Tire and Tools 5-80
Compact Spare Tire 5-82

Appearance Care 5-83
Fabric/Carpet 5-83
Vinyl 5-85
Leather 5-85
Instrument Panel 5-85
Interior Plastic Components 5-85
Child Restraint Pad 5-85
Glass Surfaces 5-85
Care of Safety Belts and Built-in Child Restraint Harness 5-86
Weatherstrips 5-86
Washing Your Vehicle 5-86
Cleaning Exterior Lamps/Lenses 5-87
Finish Care 5-87
Windshield, Backglass, and Wiper Blades 5-87
Aluminum Wheels 5-88
Tires 5-89
Sheet Metal Damage 5-89
Finish Damage 5-89
Underbody Maintenance 5-89
Chemical Paint Spotting 5-89
Vehicle Care/Appearance Materials 5-90

Vehicle Identification 5-91
Vehicle Identification Number (VIN) 5-91
Service Parts Identification Label 5-91

Electrical System 5-92
Add-On Electrical Equipment 5-92
Headlamp Wiring 5-92
Windshield Wiper Fuses 5-92
Power Windows and Other Power Options 5-92
Fuses and Circuit Breakers 5-93
Instrument Panel Fuse Block 5-93
Underhood Fuse Block 5-96

Capacities and Specifications 5-99

Downloaded from www.Manualslib.com manuals search engine

Service

Your dealer knows your vehicle best and wants you to be happy with it. We hope you will go to your dealer for all your service needs. You will get genuine GM parts and GM-trained and supported service people.

We hope you will want to keep your GM vehicle all GM. Genuine GM parts have one of these marks:

ACDelco®

GM Parts®

GM® Goodwrench

GM® Accessories

California Proposition 65 Warning

Most motor vehicles, including this one, contain and/or emit chemicals known to the State of California to cause cancer and birth defects or other reproductive harm. Engine exhaust, many parts and systems (including some inside the vehicle), many fluids, and some component wear by-products contain and/or emit these chemicals.

Downloaded from www.Manualslib.com manuals search engine

Doing Your Own Service Work

If you want to do some of your own service work, you will want to use the proper service manual. It tells you much more about how to service your vehicle than this manual can. To order the proper service manual, see *Service Publications Ordering Information on page 7-11*.

Your vehicle has an airbag system. Before attempting to do your own service work, see *Servicing Your Airbag-Equipped Vehicle on page 1-91*.

You should keep a record with all parts receipts and list the mileage and the date of any service work you perform. See *Maintenance Record on page 6-15*.

⚠ CAUTION:

You can be injured and your vehicle could be damaged if you try to do service work on a vehicle without knowing enough about it.

- **Be sure you have sufficient knowledge, experience, the proper replacement parts and tools before you attempt any vehicle maintenance task.**
- **Be sure to use the proper nuts, bolts and other fasteners. English and metric fasteners can be easily confused. If you use the wrong fasteners, parts can later break or fall off. You could be hurt.**

Downloaded from www.Manualslib.com manuals search engine

Adding Equipment to the Outside of Your Vehicle

Things you might add to the outside of your vehicle can affect the airflow around it. This may cause wind noise and affect windshield washer performance. Check with your dealer before adding equipment to the outside of your vehicle.

Fuel

Use of the recommended fuel is an important part of the proper maintenance of your vehicle.

Gasoline Octane

Use regular unleaded gasoline with a posted octane of 87 or higher. If the octane is less than 87, you may get a heavy knocking noise when you drive. If this occurs, use a gasoline rated at 87 octane or higher as soon as possible. Otherwise, you might damage your engine. A little pinging noise when you accelerate or drive uphill is considered normal. This does not indicate a problem exists or that a higher-octane fuel is necessary. If you are using 87 octane or higher-octane fuel and hear heavy knocking, your engine needs service.

Gasoline Specifications

It is recommended that gasoline meet specifications which were developed by automobile manufacturers around the world and contained in the World-Wide Fuel Charter which is available from the Alliance of Automobile Manufacturers at www.autoalliance.org/fuel_charter.htm. Gasoline meeting these specifications could provide improved driveability and emission control system performance compared to other gasoline.

Downloaded from www.Manualslib.com manuals search engine

California Fuel

If your vehicle is certified to meet California Emission Standards (see the underhood emission control label), it is designed to operate on fuels that meet California specifications. If this fuel is not available in states adopting California emissions standards, your vehicle will operate satisfactorily on fuels meeting federal specifications, but emission control system performance may be affected. The malfunction indicator lamp may turn on and your vehicle may fail a smog-check test. See *Malfunction Indicator Lamp on page 3-41*. If this occurs, return to your authorized GM dealer for diagnosis. If it is determined that the condition is caused by the type of fuel used, repairs may not be covered by your warranty.

Additives

To provide cleaner air, all gasolines in the United States are now required to contain additives that will help prevent engine and fuel system deposits from forming, allowing your emission control system to work properly. You should not have to add anything to your fuel. However, some gasolines contain only the minimum amount of additive required to meet U.S. Environmental Protection Agency regulations. General Motors recommends that you buy gasolines that are advertised to help keep fuel injectors and intake valves clean. If your vehicle experiences problems due to dirty injectors or valves, try a different brand of gasoline.

Gasolines containing oxygenates, such as ethers and ethanol, and reformulated gasolines may be available in your area to contribute to clean air. General Motors recommends that you use these gasolines, particularly if they comply with the specifications described earlier.

Downloaded from www.Manualslib.com manuals search engine

Notice: **Your vehicle was not designed for fuel that contains methanol. Do not use fuel containing methanol. It can corrode metal parts in your fuel system and also damage the plastic and rubber parts. That damage would not be covered under your warranty.**

Some gasolines that are not reformulated for low emissions may contain an octane-enhancing additive called methylcyclopentadienyl manganese tricarbonyl (MMT); ask the attendant where you buy gasoline whether the fuel contains MMT. General Motors does not recommend the use of such gasolines. Fuels containing MMT can reduce the life of spark plugs and the performance of the emission control system may be affected. The malfunction indicator lamp may turn on. If this occurs, return to your authorized GM dealer for service.

Fuels in Foreign Countries

If you plan on driving in another country outside the United States or Canada, the proper fuel may be hard to find. Never use leaded gasoline or any other fuel not recommended in the previous text on fuel. Costly repairs caused by use of improper fuel would not be covered by your warranty.

To check the fuel availability, ask an auto club, or contact a major oil company that does business in the country where you will be driving.

Downloaded from www.Manualslib.com manuals search engine

Filling Your Tank

⚠ CAUTION:

Fuel vapor burns violently and a fuel fire can cause bad injuries. To help avoid injuries to you and others, read and follow all the instructions on the pump island. Turn off your engine when you are refueling. Do not smoke if you are near fuel or refueling your vehicle. Keep sparks, flames and smoking materials away from fuel. Do not leave the fuel pump unattended when refueling your vehicle — this is against the law in some places. Keep children away from the fuel pump; never let children pump fuel.

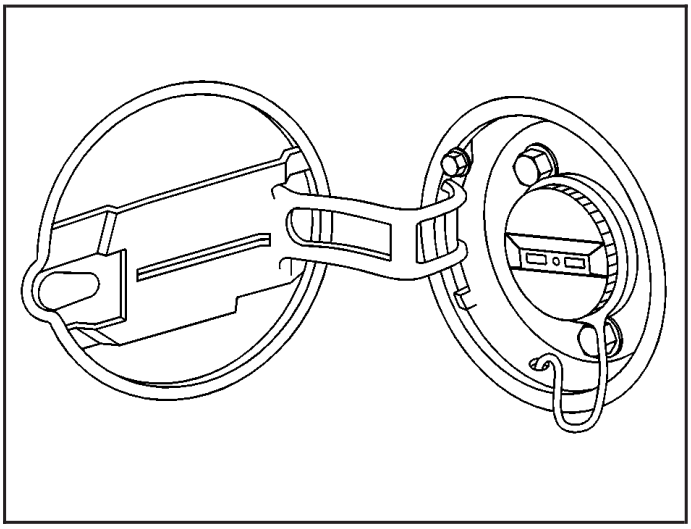

The tethered fuel cap is located behind a hinged fuel door on the driver's side of the vehicle.

When the fuel door is opened on a vehicle with dual sliding doors, the driver's side sliding door will only open partway.

Downloaded from www.Manualslib.com manuals search engine

While refueling, let the fuel cap hang by the tether.

⚠ CAUTION:

If you spill fuel and then something ignites it, you could be badly burned. Fuel can spray out on you if you open the fuel cap too quickly. This spray can happen if your tank is nearly full, and is more likely in hot weather. Open the fuel cap slowly and wait for any hiss noise to stop. Then unscrew the cap all the way.

Be careful not to spill fuel. Do not top off or overfill the tank and wait a few seconds after you have finished pumping before removing the nozzle. Clean fuel from painted surfaces as soon as possible. See *Washing Your Vehicle on page 5-86*.

When replacing the fuel cap, turn it to the right (clockwise) until it clicks. Make sure the cap is fully installed. The diagnostic system can determine if the fuel cap has been left off or improperly installed. This would allow fuel to evaporate into the atmosphere. See *Malfunction Indicator Lamp on page 3-41*.

⚠ CAUTION:

If a fire starts while you are refueling, do not remove the nozzle. Shut off the flow of fuel by shutting off the pump or by notifying the station attendant. Leave the area immediately.

Notice: **If you need a new fuel cap, be sure to get the right type. Your dealer can get one for you. If you get the wrong type, it may not fit properly. This may cause your malfunction indicator lamp to light and may damage your fuel tank and emissions system. See *Malfunction Indicator Lamp on page 3-41*.**

Downloaded from www.Manualslib.com manuals search engine

Filling a Portable Fuel Container

⚠ CAUTION:

Never fill a portable fuel container while it is in your vehicle. Static electricity discharge from the container can ignite the gasoline vapor. You can be badly burned and your vehicle damaged if this occurs. To help avoid injury to you and others:

- **Dispense gasoline only into approved containers.**
- **Do not fill a container while it is inside a vehicle, in a vehicle's trunk, pickup bed or on any surface other than the ground.**
- **Bring the fill nozzle in contact with the inside of the fill opening before operating the nozzle. Contact should be maintained until the filling is complete.**
- **Do not smoke while pumping gasoline.**

Checking Things Under the Hood

⚠ CAUTION:

An electric fan under the hood can start up and injure you even when the engine is not running. Keep hands, clothing and tools away from any underhood electric fan.

⚠ CAUTION:

Things that burn can get on hot engine parts and start a fire. These include liquids like fuel, oil, coolant, brake fluid, windshield washer and other fluids, and plastic or rubber. You or others could be burned. Be careful not to drop or spill things that will burn onto a hot engine.

Downloaded from www.Manualslib.com manuals search engine

Hood Release

To open the hood, do the following:

1. Pull the hood release handle, located under the instrument panel on the driver's side.
2. Go to the front of the vehicle and push up on the underhood release. It is located near the center of the hood, under the grille.
3. Lift the hood.
4. Pull forward on the hood prop to release it from its storage clip.

   The hood prop may be hot due to increased engine temperatures under the hood, so be careful when handling it. Use your hood prop sleeve when handling the hood prop.
5. Put the end of the hood prop into the slot in the underside of the hood.

Before closing the hood, be sure all the filler caps are on properly. Lift the hood to relieve pressure on the hood prop. Remove the hood prop from the slot in the hood and return the prop to its retainer. Then let the hood down and close it firmly.

Downloaded from www.Manualslib.com manuals search engine

Engine Compartment Overview

When you lift the hood, here is what you will see:

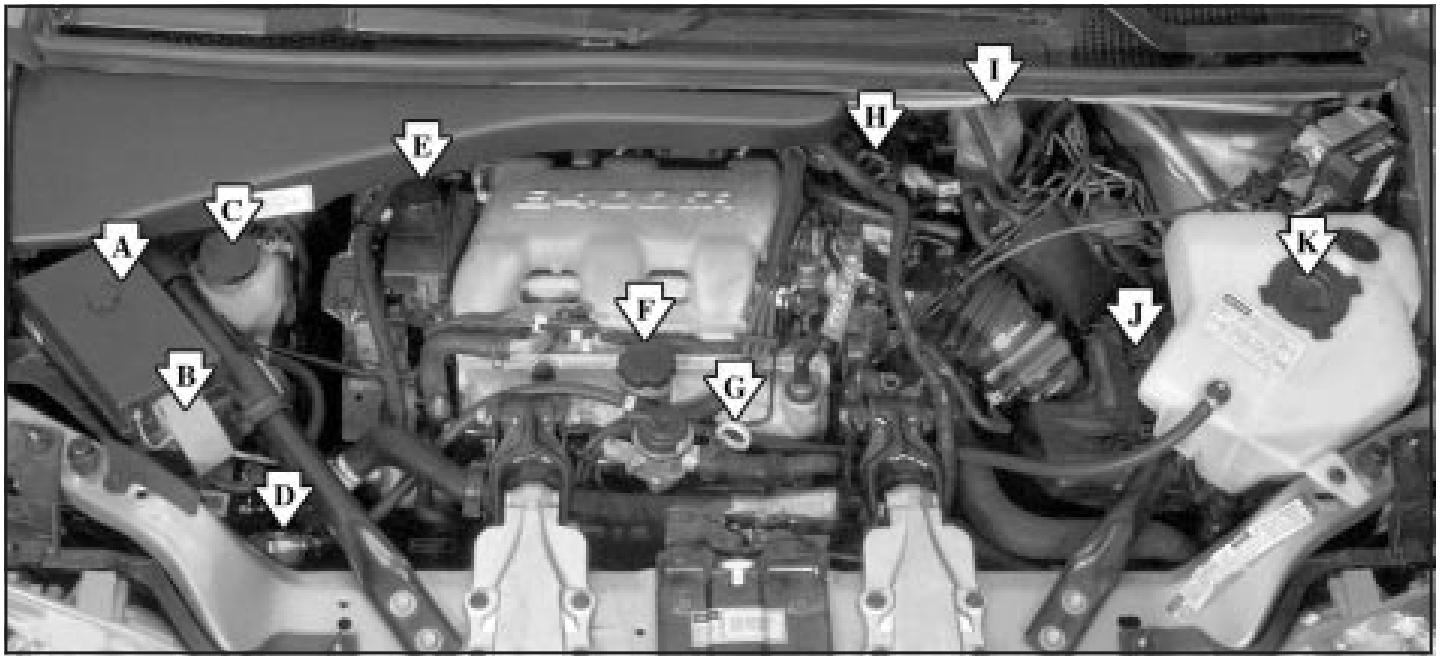

Downloaded from www.Manualslib.com manuals search engine

A. Underhood Fuse Block. See *Underhood Fuse Block on page 5-96*.

B. Remote Positive (+) Terminal. See *Jump Starting on page 5-39*.

C. Windshield Washer Fluid Reservoir. See “Adding Washer Fluid” under *Windshield Washer Fluid on page 5-34*.

D. Radiator Pressure Cap. See *Radiator Pressure Cap on page 5-24*.

E. Power Steering Fluid Reservoir. See *Power Steering Fluid on page 5-32*.

F. Engine Oil Fill Cap. See “When to Add Engine Oil” under *Engine Oil on page 5-13*.

G. Engine Oil Dipstick. See “Checking Engine Oil” under *Engine Oil on page 5-13*.

H. Automatic Transaxle Fluid Dipstick. See “Checking the Fluid Level” under *Automatic Transaxle Fluid on page 5-19*.

I. Brake Master Cylinder Reservoir. See “Brake Fluid” under *Brakes on page 5-35*.

J. Engine Air Cleaner/Filter. See *Engine Air Cleaner/Filter on page 5-17*.

K. Engine Coolant Recovery Tank. See *Cooling System on page 5-27*.

Engine Oil

Checking Engine Oil

It is a good idea to check your engine oil every time you get fuel. In order to get an accurate reading, the oil must be warm and the vehicle must be on level ground.

The engine oil dipstick handle is a yellow loop. See *Engine Compartment Overview on page 5-12* for the location of the engine oil dipstick.

1. Turn off the engine and give the oil several minutes to drain back into the oil pan. If you do not do this, the oil dipstick might not show the actual level.
2. Pull out the dipstick and clean it with a paper towel or cloth, then push it back in all the way. Remove it again, keeping the tip down, and check the level.

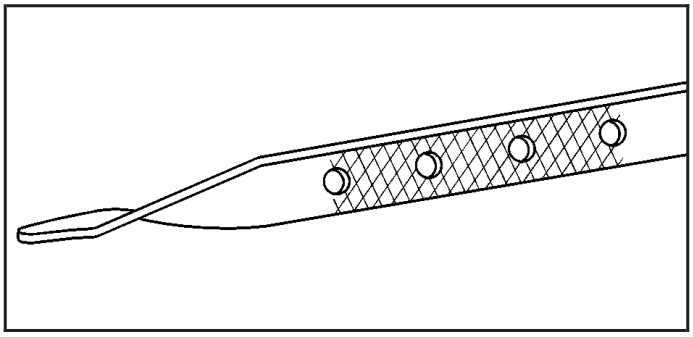

Downloaded from www.Manualslib.com manuals search engine

When to Add Engine Oil

If the oil is at or below the cross-hatched area at the tip of the dipstick, then you will need to add at least one quart of oil. But you must use the right kind. This section explains what kind of oil to use. For engine oil crankcase capacity, see *Capacities and Specifications on page 5-99*.

Notice: **Do not add too much oil. If your engine has so much oil that the oil level gets above the cross-hatched area that shows the proper operating range, your engine could be damaged.**

See *Engine Compartment Overview on page 5-12* for the location of the engine oil fill cap.

Be sure to add enough oil to put the level somewhere in the proper operating range in the cross-hatched area. Push the dipstick all the way back in when you are through.

What Kind of Engine Oil to Use

Look for two things:

- GM6094M

  Your vehicle's engine requires oil meeting GM Standard GM6094M. You should look for and use only an oil that meets GM Standard GM6094M.

Downloaded from www.Manualslib.com manuals search engine

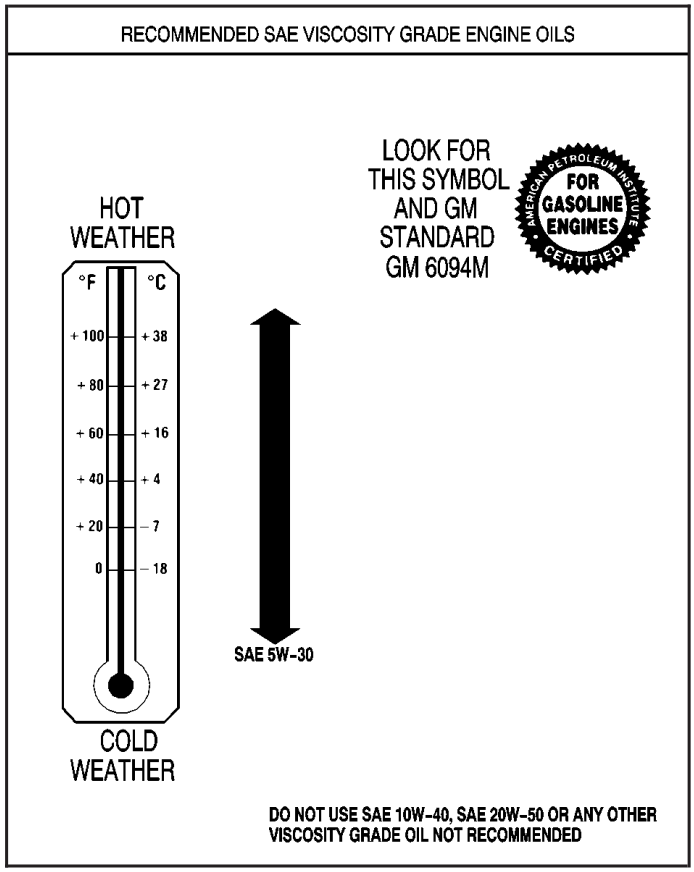

- SAE 5W-30

  As shown in the viscosity chart, SAE 5W-30 is best for your vehicle.

  These numbers on an oil container show its viscosity, or thickness. Do not use other viscosity oils such as SAE 20W-50.

Oils meeting these requirements should also have the starburst symbol on the container. This symbol indicates that the oil has been certified by the American Petroleum Institute (API).

You should look for this information on the oil container, and use *only* those oils that are identified as meeting GM Standard GM6094M and have the starburst symbol on the front of the oil container.

Downloaded from www.Manualslib.com manuals search engine

Notice: **Use only engine oil identified as meeting GM Standard GM6094M and showing the American Petroleum Institute Certified For Gasoline Engines starburst symbol. Failure to use the recommended oil can result in engine damage not covered by your warranty.**

GM Goodwrench® oil meets all the requirements for your vehicle.

If you are in an area of extreme cold, where the temperature falls below –20°F (–29°C), it is recommended that you use either an SAE 5W-30 synthetic oil or an SAE 0W-30 oil. Both will provide easier cold starting and better protection for your engine at extremely low temperatures.

Engine Oil Additives

Do not add anything to your oil. The recommended oils with the starburst symbol meet GM Standard GM6094M are all you will need for good performance and engine protection.

Engine Oil Life System

When to Change Engine Oil

Your vehicle has a computer system that lets you know when to change the engine oil and filter. This is based on engine revolutions and engine temperature, and not on mileage. Based on driving conditions, the mileage at which an oil change will be indicated can vary considerably. For the oil life system to work properly, you must reset the system every time the oil is changed.

When the system has calculated that oil life has been diminished, it will indicate that an oil change is necessary. A CHANGE ENGINE OIL message will come on. See *Change Engine Oil Message on page 3-49*. Change your oil as soon as possible within the next 600 miles (1 000 km). It is possible that, if you are driving under the best conditions, the oil life system may not indicate that an oil change is necessary for over a year. However, your engine oil and filter must be changed at least once a year and at this time the system must be reset. Your dealer has GM-trained people who will perform this work using genuine GM parts and reset the system. It is also important to check your oil regularly and keep it at the proper level.

If the system is ever reset accidentally, you must change your oil at 3,000 miles (5 000 km) since your last oil change. Remember to reset the oil life system whenever the oil is changed.

Downloaded from www.Manualslib.com manuals search engine

How to Reset the Engine Oil Life System

The Engine Oil Life System calculates when to change your engine oil and filter based on vehicle use. Anytime your oil is changed, reset the system so it can calculate when the next oil change is required. If a situation occurs where you change your oil prior to a CHANGE ENGINE OIL message being turned on, reset the system.

1. With the ignition key in RUN but the engine off, repeatedly push the trip/reset button until OIL is displayed on the Driver Information Center (DIC).
2. Once OIL is displayed, push and hold the trip/reset button for five seconds. The number will disappear and be replaced by 100 (indicating 100% oil life remaining).
3. Turn the key to OFF.

If the CHANGE ENGINE OIL message comes back on when you start your vehicle, the engine oil life system has not reset. Repeat the procedure.

What to Do with Used Oil

Used engine oil contains certain elements that may be unhealthy for your skin and could even cause cancer. Do not let used oil stay on your skin for very long. Clean your skin and nails with soap and water, or a good hand cleaner. Wash or properly dispose of clothing or rags containing used engine oil. See the manufacturer's warnings about the use and disposal of oil products.

Used oil can be a threat to the environment. If you change your own oil, be sure to drain all the oil from the filter before disposal. Never dispose of oil by putting it in the trash, pouring it on the ground, into sewers, or into streams or bodies of water. Instead, recycle it by taking it to a place that collects used oil. If you have a problem properly disposing of your used oil, ask your dealer, a service station or a local recycling center for help.

Engine Air Cleaner/Filter

See *Engine Compartment Overview on page 5-12* for the location of the engine air cleaner/filter.

When to Inspect the Engine Air Cleaner/Filter

Inspect the air cleaner/filter at every oil change and replace it at the first oil change after 25,000 miles (40 000 km). See *Scheduled Maintenance on page 6-4* for more information.

Downloaded from www.Manualslib.com manuals search engine

How to Inspect the Engine Air Cleaner/Filter

To inspect the air cleaner/filter, remove the filter from the vehicle and lightly shake the filter to release loose dust and dirt. If the filter remains caked with dirt, a new filter is required.

To inspect or replace the air cleaner/filter, do the following:

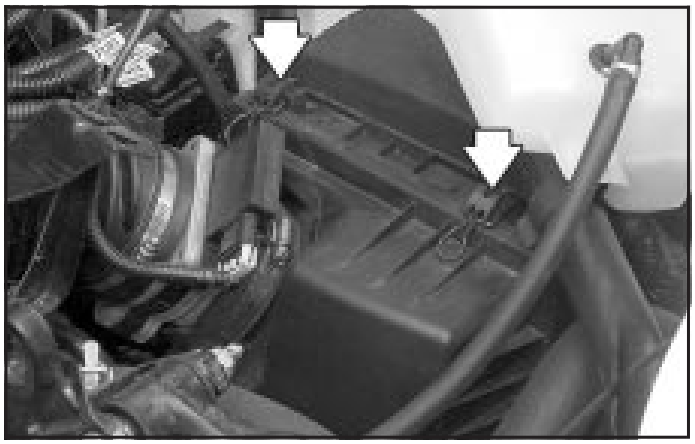

1. Remove the two clamps on the duct.
2. Remove the duct.
3. Unlatch the two hooks on top of the engine air cleaner/filter housing.
4. Inspect or replace the engine air cleaner/filter.
5. Align the tabs located on the bottom of the panel with the slots at the bottom of the housing.
6. Latch the hooks to secure the panel in place. If the panel moves easily, check that the tabs are seated correctly in the slots.
7. Put the duct back on and reinstall the clamps.

⚠ CAUTION:

Operating the engine with the air cleaner/filter off can cause you or others to be burned. The air cleaner not only cleans the air; it helps to stop flame if the engine backfires. If it is not there and the engine backfires, you could be burned. Do not drive with it off, and be careful working on the engine with the air cleaner/filter off.

Notice: **If the air cleaner/filter is off, a backfire can cause a damaging engine fire. And, dirt can easily get into your engine, which will damage it. Always have the air cleaner/filter in place when you are driving.**

Downloaded from www.Manualslib.com manuals search engine

Automatic Transaxle Fluid

When to Check and Change Automatic Transaxle Fluid

A good time to check your automatic transaxle fluid level is when the engine oil is changed.

Change both the fluid and filter every 50,000 miles (83 000 km) if the vehicle is mainly driven under one or more of these conditions:

- In heavy city traffic where the outside temperature regularly reaches 90°F (32°C) or higher.
- In hilly or mountainous terrain.
- When doing frequent trailer towing.
- Uses such as found in taxi, police or delivery service.

If you do not use your vehicle under any of these conditions, change the fluid and filter at 100,000 miles (166 000 km).

See *Scheduled Maintenance on page 6-4* for more information.

How to Check Automatic Transaxle Fluid

Because this operation can be a little difficult, you may choose to have this done at the dealership service department.

If you do it yourself, be sure to follow all the instructions here, or you could get a false reading on the dipstick.

Notice: **Too much or too little fluid can damage the transaxle. Too much can mean that some of the fluid could come out and fall on hot engine or exhaust system parts, starting a fire. Too little fluid could cause the transaxle to overheat. Be sure to get an accurate reading if you check the transaxle fluid.**

Wait at least 30 minutes before checking the transaxle fluid level if you have been driving:

- When outside temperatures are above 90°F (32°C).
- At high speed for quite a while.
- In heavy traffic — especially in hot weather.
- While pulling a trailer.

Downloaded from www.Manualslib.com manuals search engine

To get the right reading, the fluid should be at normal operating temperature, which is 180°F to 200°F (82°C to 93°C).

Get the vehicle warmed up by driving about 15 miles (24 km) when outside temperatures are above 50°F (10°C). If it is colder than 50°F (10°C), you may have to drive longer.

Checking the Fluid Level

Prepare your vehicle as follows:

- Park your vehicle on a level place. Keep the engine running.
- With the parking brake applied, place the shift lever in PARK (P).
- With your foot on the brake pedal, move the shift lever through each gear range, pausing for about three seconds in each range. Then, position the shift lever in PARK (P).
- Let the engine run at idle for three to five minutes.

Then, without shutting off the engine, follow these steps:

The automatic transaxle dipstick is located toward the back of the engine compartment, next to the brake master cylinder reservoir. The dipstick handle is a red loop. See *Engine Compartment Overview on page 5-12* for more information on location.

1. Pull out the dipstick and wipe it with a clean rag or paper towel.
2. Push it back in all the way, wait three seconds and then pull it back out again.

Downloaded from www.Manualslib.com manuals search engine

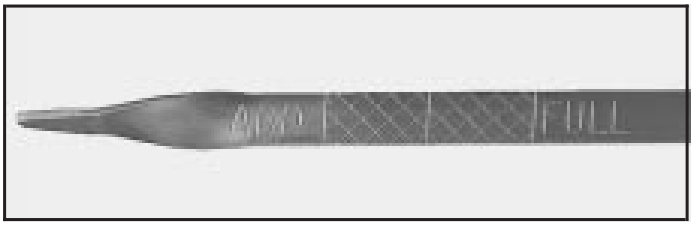

3. Check both sides of the dipstick, and read the lower level. The fluid level must be in the cross-hatched area.
4. If the fluid level is in the acceptable range, push the dipstick back in all the way.

How to Add Fluid Automatic Transaxle Fluid

Refer to the Maintenance Schedule to determine what kind of transaxle fluid to use. See *Recommended Fluids and Lubricants on page 6-12*.

If the fluid level is low, add only enough of the proper fluid to bring the level into the cross-hatched area on the dipstick.

1. Pull out the dipstick.
2. Using a long-neck funnel, add enough fluid at the dipstick hole to bring it to the proper level.

   It does not take much fluid, generally less than 1 pint (0.5 L). *Do not overfill.*

Notice: **Use of automatic transaxle fluid labeled other than DEXRON®-III, Approved for the H-Specification, may damage your vehicle, and the damages may not be covered by your warranty. Always use automatic transaxle fluid labeled DEXRON®-III, Approved for the H-Specification.**

3. After adding fluid, recheck the fluid level as described under “How to Check Automatic Transaxle Fluid,” earlier in this section.
4. When the correct fluid level is obtained, push the dipstick back in all the way.

Downloaded from www.Manualslib.com manuals search engine

Engine Coolant

The cooling system in your vehicle is filled with DEX-COOL® engine coolant. This coolant is designed to remain in your vehicle for 5 years or 150,000 miles (240 000 km), whichever occurs first, if you add only DEX-COOL® extended life coolant.

The following explains your cooling system and how to add coolant when it is low. If you have a problem with engine overheating, see *Engine Overheating on page 5-25*.

A 50/50 mixture of clean, drinkable water and DEX-COOL® coolant will:

- Give freezing protection down to –34°F (–37°C).
- Give boiling protection up to 265°F (129°C).
- Protect against rust and corrosion.
- Help keep the proper engine temperature.
- Let the warning messages and gages work as they should.

Notice: **Using coolant other than DEX-COOL® may cause premature engine, heater core or radiator corrosion. In addition, the engine coolant may require changing sooner, at 30,000 miles (50 000 km) or 24 months, whichever occurs first. Any repairs would not be covered by your warranty. Always use DEX-COOL® (silicate-free) coolant in your vehicle.**

What Engine Coolant to Use

Use a mixture of one-half *clean, drinkable water* and one-half DEX-COOL® coolant which will not damage aluminum parts. If you use this coolant mixture, you do not need to add anything else.

⚠ CAUTION:

Adding only plain water to your cooling system can be dangerous. Plain water, or some other liquid such as alcohol, can boil before the proper coolant mixture will. Your vehicle's coolant warning system is set for the proper coolant mixture. With plain water or the wrong mixture, your engine could get too hot but you would not get the overheat warning. Your engine could catch fire and you or others could be burned. Use a 50/50 mixture of clean, drinkable water and DEX-COOL® coolant.

Downloaded from www.Manualslib.com manuals search engine

Notice: **If you use an improper coolant mixture, your engine could overheat and be badly damaged. The repair cost would not be covered by your warranty. Too much water in the mixture can freeze and crack the engine, radiator, heater core and other parts.**

If you have to add coolant more than four times a year, have your dealer check your cooling system.

Notice: **If you use the proper coolant, you do not have to add extra inhibitors or additives which claim to improve the system. These can be harmful.**

Checking Coolant

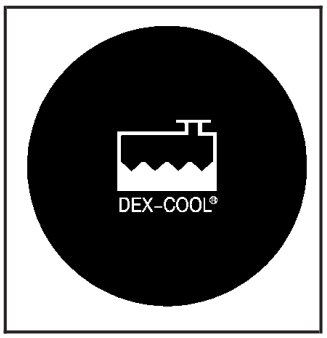

The coolant recovery tank is located on the driver's side of the vehicle, above the engine air cleaner/filter. See *Engine Compartment Overview on page 5-12* for more information on location.

The vehicle must be on a level surface. When your engine is cold, the coolant level should be at the FULL COLD mark, or a little higher. When your engine is warm, the level should be above the FULL COLD mark or a little higher.

Downloaded from www.Manualslib.com manuals search engine

Adding Coolant

If you need more coolant, add the proper DEX-COOL® coolant mixture *at the coolant recovery tank,* but be careful not to spill it.

⚠ CAUTION:

Turning the radiator pressure cap when the engine and radiator are hot can allow steam and scalding liquids to blow out and burn you badly. With the coolant recovery tank, you will almost never have to add coolant at the radiator. Never turn the radiator pressure cap — even a little — when the engine and radiator are hot.

⚠ CAUTION:

You can be burned if you spill coolant on hot engine parts. Coolant contains ethylene glycol, and it will burn if the engine parts are hot enough. Do not spill coolant on a hot engine.

Occasionally check the coolant level in the radiator. For information on how to add coolant to the radiator, see *Cooling System on page 5-27*.

Radiator Pressure Cap

Notice: **The radiator cap on your vehicle is a pressure-type cap and must be tightly installed to prevent coolant loss and possible engine damage from overheating. Be sure the arrows on the cap line up with the overflow tube on the radiator filler neck.**

See *Engine Compartment Overview on page 5-12* for more information on location.

Downloaded from www.Manualslib.com manuals search engine

Engine Overheating

You will find an engine coolant temperature gage on your vehicle's instrument panel. See *Engine Coolant Temperature Gage on page 3-41*. You also have an engine coolant temperature warning message on your instrument panel. See *Engine Coolant Temperature Warning Message on page 3-47*.

If Steam Is Coming From Your Engine

⚠ CAUTION:

Steam from an overheated engine can burn you badly, even if you just open the hood. Stay away from the engine if you see or hear steam coming from it. Just turn it off and get everyone away from the vehicle until it cools down. Wait until there is no sign of steam or coolant before you open the hood.

CAUTION: (Continued)

CAUTION: (Continued)

If you keep driving when your engine is overheated, the liquids in it can catch fire. You or others could be badly burned. Stop your engine if it overheats, and get out of the vehicle until the engine is cool.

See *Overheated Engine Protection Operating Mode on page 5-26* for information on driving to a safe place in an emergency.

Notice: **If your engine catches fire because you keep driving with no coolant, your vehicle can be badly damaged. The costly repairs would not be covered by your warranty. See *Overheated Engine Protection Operating Mode on page 5-26* for information on driving to a safe place in an emergency.**

Downloaded from www.Manualslib.com manuals search engine

If No Steam Is Coming From Your Engine

If you get an engine overheat warning but see or hear no steam, the problem may not be too serious. Sometimes the engine can get a little too hot when you:

- Climb a long hill on a hot day.
- Stop after high-speed driving.
- Idle for long periods in traffic.
- Tow a trailer.

If you get the overheat warning with no sign of steam, try this for a minute or so:

1. If your air conditioner is on, turn it off.
2. Turn on your heater to full hot at the highest fan speed and open the windows as necessary.
3. If you are in a traffic jam, shift to NEUTRAL (N); otherwise, shift to the highest gear while driving — AUTOMATIC OVERDRIVE (D) or THIRD (3).

If you no longer have the overheat warning, you can drive. Just to be safe, drive slower for about 10 minutes. If the warning does not come back on, you can drive normally.

If the warning continues, pull over, stop, and park your vehicle right away.

If there is still no sign of steam, idle the engine for three minutes while you are parked. If you still have the warning, *turn off the engine and get everyone out of the vehicle* until it cools down. Also, see “Overheated Engine Protection Operating Mode” later in this section.

You may decide not to lift the hood but to get service help right away.

Overheated Engine Protection Operating Mode

This emergency operating mode allows your vehicle to be driven to a safe place in an emergency situation. If an overheated engine condition exists, an overheat protection mode which alternates firing groups of cylinders helps prevent engine damage. In this mode, you will notice a significant loss in power and engine performance. The temperature gage will indicate an overheat condition exists. Driving extended miles (km) and/or towing a trailer in the overheat protection mode should be avoided.

Notice: **After driving in the overheated engine protection operating mode, to avoid engine damage, allow the engine to cool before attempting any repair. The engine oil will be severely degraded. Repair the cause of coolant loss, change the oil and reset the oil life system. See *Engine Oil on page 5-13*.**

Downloaded from www.Manualslib.com manuals search engine

Cooling System

When you decide it is safe to lift the hood, here is what you will see:

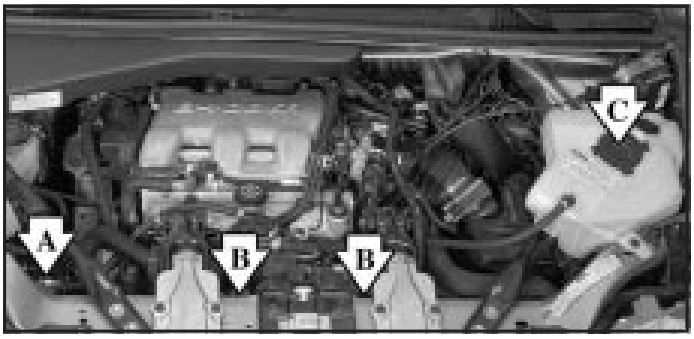

A. Radiator Pressure Cap
B. Electric Engine Cooling Fans
C. Coolant Recovery Tank

⚠ CAUTION:

An electric engine cooling fan under the hood can start up even when the engine is not running and can injure you. Keep hands, clothing and tools away from any underhood electric fan.

If the coolant inside the coolant recovery tank is boiling, do not do anything else until it cools down. The vehicle should be parked on a level surface.

Downloaded from www.Manualslib.com manuals search engine

The coolant level should be at or above the FULL COLD mark. If it is not, you may have a leak at the pressure cap or in the radiator hoses, heater hoses, radiator, water pump or somewhere else in the cooling system.

⚠ CAUTION:

Heater and radiator hoses, and other engine parts, can be very hot. Do not touch them. If you do, you can be burned.

Do not run the engine if there is a leak. If you run the engine, it could lose all coolant. That could cause an engine fire, and you could be burned. Get any leak fixed before you drive the vehicle.

If there seems to be no leak, with the engine on, check to see if the electric engine cooling fans are running. If the engine is overheating, both fans should be running. If they are not, your vehicle needs service.

Notice: **Engine damage from running your engine without coolant is not covered by your warranty. See *Overheated Engine Protection Operating Mode on page 5-26* for information on driving to a safe place in an emergency.**

Notice: **Using coolant other than DEX-COOL® may cause premature engine, heater core or radiator corrosion. In addition, the engine coolant may require changing sooner, at 30,000 miles (50 000 km) or 24 months, whichever occurs first. Any repairs would not be covered by your warranty. Always use DEX-COOL® (silicate-free) coolant in your vehicle.**

How to Add Coolant to the Coolant Recovery Tank

If you have not found a problem yet, but the coolant level is not at or above the FULL COLD mark, add a 50/50 mixture of *clean, drinkable water* and DEX-COOL® engine coolant at the coolant recovery tank. See *Engine Coolant on page 5-22* for more information.

Downloaded from www.Manualslib.com manuals search engine

⚠ CAUTION:

Adding only plain water to your cooling system can be dangerous. Plain water, or some other liquid such as alcohol, can boil before the proper coolant mixture will. Your vehicle's coolant warning system is set for the proper coolant mixture. With plain water or the wrong mixture, your engine could get too hot but you would not get the overheat warning. Your engine could catch fire and you or others could be burned. Use a 50/50 mixture of clean, drinkable water and DEX-COOL® coolant.

Notice: **In cold weather, water can freeze and crack the engine, radiator, heater core and other parts. Use the recommended coolant and the proper coolant mixture.**

When the coolant in the coolant recovery tank is at or above the FULL COLD mark, start your vehicle.

⚠ CAUTION:

You can be burned if you spill coolant on hot engine parts. Coolant contains ethylene glycol and it will burn if the engine parts are hot enough. Do not spill coolant on a hot engine.

If the overheat warning continues, there is one more thing you can try. You can add the proper coolant mixture directly to the radiator, but be sure the cooling system is cool before you do it.

⚠ CAUTION:

Steam and scalding liquids from a hot cooling system can blow out and burn you badly. They are under pressure, and if you turn the radiator pressure cap — even a little — they can come out at high speed. Never turn the cap when the cooling system, including the radiator pressure cap, is hot. Wait for the cooling system and radiator pressure cap to cool if you ever have to turn the pressure cap.

Downloaded from www.Manualslib.com manuals search engine

How to Add Coolant to the Radiator

Notice: **Your engine has a specific radiator fill procedure. Failure to follow this procedure could cause your engine to overheat and be severely damaged.**

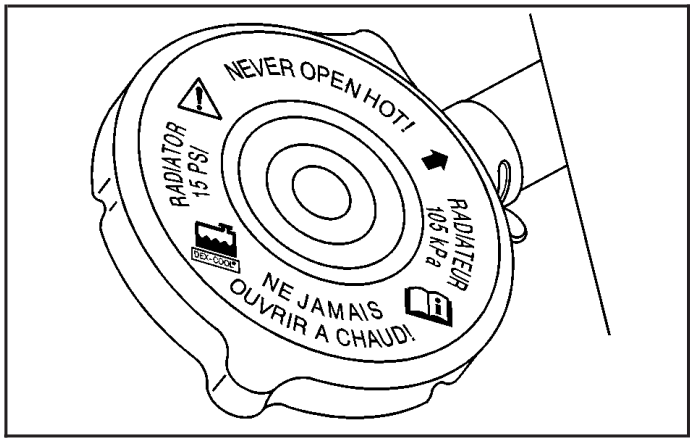

1. You can remove the radiator pressure cap when the cooling system, including the radiator pressure cap and upper radiator hose, is no longer hot. Turn the pressure cap slowly counterclockwise until it first stops. Do not press down while turning the pressure cap.

   If you hear a hiss, wait for that to stop. A hiss means there is still some pressure left.

2. Then keep turning the pressure cap, but now push down as you turn it. Remove the pressure cap.

⚠ CAUTION:

You can be burned if you spill coolant on hot engine parts. Coolant contains ethylene glycol and it will burn if the engine parts are hot enough. Do not spill coolant on a hot engine.

Housing

Bypass Tube

Downloaded from www.Manualslib.com manuals search engine

3. After the engine cools, open the coolant air bleed valves.

   There are two bleed valves. One is located on the thermostat housing. The other is located on the thermostat bypass tube.

4. Fill the radiator with the proper DEX-COOL® coolant mixture, up to the base of the filler neck. See *Engine Coolant on page 5-22* for more information about the proper coolant mixture.

   If you see a stream of coolant coming from an air bleed valve, close the valve. Otherwise, close the valves after the radiator is filled.

5. Rinse or wipe any spilled coolant from the engine and the compartment.

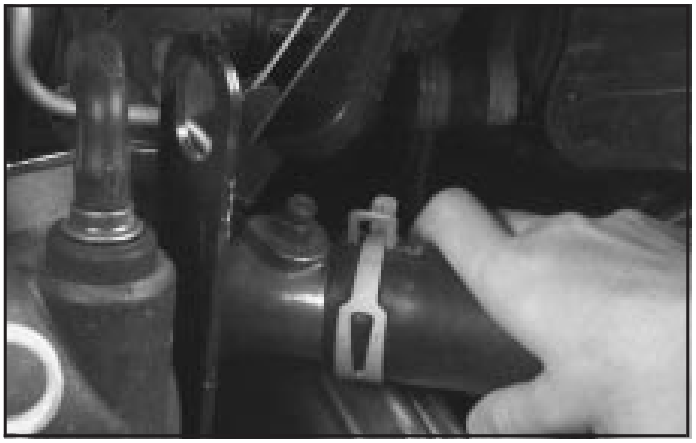

6. Start the engine and let it run until you can feel the upper radiator hose getting hot. Watch out for the engine cooling fans.
7. By this time, the coolant level inside the radiator filler neck may be lower. If the level is lower, add more of the proper DEX-COOL® coolant mixture through the filler neck until the level reaches the base of the filler neck.

Downloaded from www.Manualslib.com manuals search engine

8. Then replace the pressure cap. At any time during this procedure if coolant begins to flow out of the filler neck, reinstall the pressure cap. Be sure the arrows on the pressure cap line up with the vent tube.

9. Then fill the coolant recovery tank to the FULL COLD mark.
10. Put the cap back on the coolant recovery tank.

Power Steering Fluid

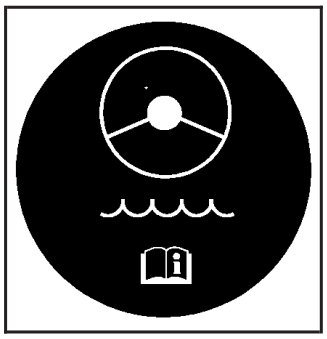

See *Engine Compartment Overview on page 5-12* for reservoir location.

Downloaded from www.Manualslib.com manuals search engine

When to Check Power Steering Fluid

It is not necessary to regularly check power steering fluid unless you suspect there is a leak in the system or you hear an unusual noise. A fluid loss in this system could indicate a problem. Have the system inspected and repaired.

How to Check Power Steering Fluid

To check the power steering fluid, do the following:

1. Turn the key off and let the engine compartment cool down.
2. Wipe the cap and the top of the reservoir clean.
3. Unscrew the cap and wipe the dipstick with a clean rag.
4. Replace the cap and completely tighten it.
5. Remove the cap again and look at the fluid level on the dipstick.

When the engine compartment is hot, the level should be at the H (hot) mark. When it is cold, the level should be at the C (cold) mark. If the fluid is at the ADD mark, you should add fluid.

What Power Steering Fluid to Use

To determine what kind of fluid to use, see *Recommended Fluids and Lubricants on page 6-12*. Always use the proper fluid. Failure to use the proper fluid can cause leaks and damage hoses and seals.

Downloaded from www.Manualslib.com manuals search engine

Windshield Washer Fluid

What Washer Fluid to Use

When you need windshield washer fluid, be sure to read the manufacturer's instructions before use. If you will be operating your vehicle in an area where the temperature may fall below freezing, use a fluid that has sufficient protection against freezing.

Adding Washer Fluid

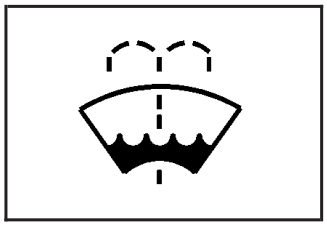

Open the cap with the washer symbol on it. Add washer fluid until the tank is full. See *Engine Compartment Overview on page 5-12* for reservoir location.

Notice:

- **When using concentrated washer fluid, follow the manufacturer's instructions for adding water.**
- **Do not mix water with ready-to-use washer fluid. Water can cause the solution to freeze and damage your washer fluid tank and other parts of the washer system. Also, water does not clean as well as washer fluid.**
- **Fill your washer fluid tank only three-quarters full when it is very cold. This allows for expansion if freezing occurs, which could damage the tank if it is completely full.**
- **Do not use engine coolant (antifreeze) in your windshield washer. It can damage your washer system and paint.**

Downloaded from www.Manualslib.com manuals search engine

Brakes

Brake Fluid

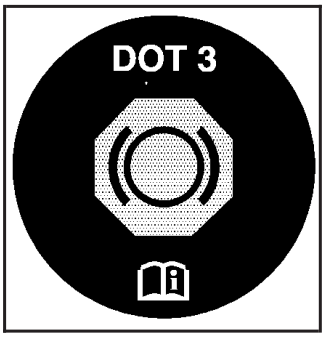

Your brake master cylinder reservoir is filled with DOT-3 brake fluid. See *Engine Compartment Overview on page 5-12* for the location of the reservoir.

There are only two reasons why the brake fluid level in the reservoir might go down. The first is that the brake fluid goes down to an acceptable level during normal brake lining wear. When new linings are put in, the fluid level goes back up. The other reason is that fluid is leaking out of the brake system. If it is, you should have your brake system fixed, since a leak means that sooner or later your brakes will not work well, or will not work at all.

So, it is not a good idea to top off your brake fluid. Adding brake fluid will not correct a leak. If you add fluid when your linings are worn, then you will have too much fluid when you get new brake linings. You should add or remove brake fluid, as necessary, only when work is done on the brake hydraulic system.

⚠ CAUTION:

If you have too much brake fluid, it can spill on the engine. The fluid will burn if the engine is hot enough. You or others could be burned, and your vehicle could be damaged. Add brake fluid only when work is done on the brake hydraulic system.

When your brake fluid falls to a low level, your brake warning light will come on. See *Brake System Warning Light on page 3-39*.

Downloaded from www.Manualslib.com manuals search engine

What to Add

When you do need brake fluid, use only DOT-3 brake fluid. Use new brake fluid from a sealed container only. See *Recommended Fluids and Lubricants on page 6-12*.

Always clean the brake fluid reservoir cap and the area around the cap before removing it. This will help keep dirt from entering the reservoir.

⚠ CAUTION:

With the wrong kind of fluid in your brake system, your brakes may not work well, or they may not even work at all. This could cause a crash. Always use the proper brake fluid.

Notice:

- **Using the wrong fluid can badly damage brake system parts. For example, just a few drops of mineral-based oil, such as engine oil, in your brake system can damage brake system parts so badly that they will have to be replaced. Do not let someone put in the wrong kind of fluid.**
- **If you spill brake fluid on your vehicle's painted surfaces, the paint finish can be damaged. Be careful not to spill brake fluid on your vehicle. If you do, wash it off immediately. See *Appearance Care on page 5-83*.**

Downloaded from www.Manualslib.com manuals search engine

Brake Wear

Your vehicle has front disc brakes and may have rear drum brakes or rear disc brakes.

Disc brake pads have built-in wear indicators that make a high-pitched warning sound when the brake pads are worn and new pads are needed. The sound may come and go or be heard all the time your vehicle is moving, except when you are pushing on the brake pedal firmly.

⚠ CAUTION:

The brake wear warning sound means that soon your brakes will not work well. That could lead to an accident. When you hear the brake wear warning sound, have your vehicle serviced.

Notice: **Continuing to drive with worn-out brake pads could result in costly brake repair.**

Some driving conditions or climates may cause a brake squeal when the brakes are first applied or lightly applied. This does not mean something is wrong with your brakes.

Properly torqued wheel nuts are necessary to help prevent brake pulsation. When tires are rotated, inspect brake pads for wear and evenly tighten wheel nuts in the proper sequence to GM torque specifications.

If you have rear drum brakes, they do not have wear indicators, but if you ever hear a rear brake rubbing noise, have the rear brake linings inspected immediately. Also, the rear brake drums should be removed and inspected each time the tires are removed for rotation or changing. When you have the front brake pads replaced, have the rear brakes inspected, too.

Brake linings should always be replaced as complete axle sets.

Brake Pedal Travel

See your dealer if the brake pedal does not return to normal height, or if there is a rapid increase in pedal travel. This could be a sign of brake trouble.

Brake Adjustment

Every time you apply the brakes, with or without the vehicle moving, your brakes adjust for wear.

Downloaded from www.Manualslib.com manuals search engine

Replacing Brake System Parts

The braking system on a vehicle is complex. Its many parts have to be of top quality and work well together if the vehicle is to have really good braking. Your vehicle was designed and tested with top-quality GM brake parts. When you replace parts of your braking system — for example, when your brake linings wear down and you need new ones put in — be sure you get new approved GM replacement parts. If you do not, your brakes may no longer work properly. For example, if someone puts in brake linings that are wrong for your vehicle, the balance between your front and rear brakes can change — for the worse. The braking performance you have come to expect can change in many other ways if someone puts in the wrong replacement brake parts.

Battery

Your vehicle has a maintenance free battery. When it is time for a new battery, get one that has the replacement number shown on the original battery's label. We recommend an ACDelco® replacement battery.

Warning: Battery posts, terminals and related accessories contain lead and lead compounds, chemicals known to the State of California to cause cancer and reproductive harm. Wash hands after handling.

Vehicle Storage

If you are not going to drive your vehicle for 25 days or more, remove the black, negative (–) cable from the battery. This will help keep your battery from running down.

⚠ CAUTION:

Batteries have acid that can burn you and gas that can explode. You can be badly hurt if you are not careful. See *Jump Starting on page 5-39* for tips on working around a battery without getting hurt.

Also, for your audio system, see *Theft-Deterrent Feature on page 3-115*.

Downloaded from www.Manualslib.com manuals search engine

Jump Starting

If your battery has run down, you may want to use another vehicle and some jumper cables to start your vehicle. Be sure to use the following steps to do it safely.

On vehicles equipped with the optional power sliding door, a low-voltage battery or replacing a battery may cause the system to become inoperative. See *Power Sliding Door (PSD) on page 2-16* for more information.

⚠ CAUTION:

Batteries can hurt you. They can be dangerous because:

- **They contain acid that can burn you.**
- **They contain gas that can explode or ignite.**
- **They contain enough electricity to burn you.**

If you do not follow these steps exactly, some or all of these things can hurt you.

Notice: **Ignoring these steps could result in costly damage to your vehicle that would not be covered by your warranty.**

Trying to start your vehicle by pushing or pulling it will not work, and it could damage your vehicle.

1. Check the other vehicle. It must have a 12-volt battery with a negative ground system.

Notice: **If the other vehicle's system is not a 12-volt system with a negative ground, both vehicles can be damaged. Only use vehicles with 12-volt systems with negative grounds to jump start your vehicle.**

2. Get the vehicles close enough so the jumper cables can reach, but be sure the vehicles are not touching each other. If they are, it could cause a ground connection you do not want. You would not be able to start your vehicle, and the bad grounding could damage the electrical systems.

   To avoid the possibility of the vehicles rolling, set the parking brake firmly on both vehicles involved in the jump start procedure. Put an automatic transaxle in PARK (P) or a manual transaxle in NEUTRAL before setting the parking brake.

Downloaded from www.Manualslib.com manuals search engine

Notice: **If you leave your radio or other accessories on during the jump starting procedure, they could be damaged. The repairs would not be covered by your warranty. Always turn off your radio and other accessories when jump starting your vehicle.**

3. Turn off the ignition on both vehicles. Unplug unnecessary accessories plugged into the cigarette lighter or the accessory power outlet. Turn off the radio and all lamps that are not needed. This will avoid sparks and help save both batteries. And it could save the radio!
4. Open the hoods and locate the batteries. Find the positive (+) and negative (–) terminal locations on each vehicle.

   You will not need to access your battery for jump starting. Your vehicle has a remote positive (+) jump starting terminal for that purpose.

The terminal is located under a tethered cap at the front of the underhood fuse block. See *Engine Compartment Overview on page 5-12* for more information on location.

Squeeze the tabs and pull up on the cap to access the remote positive (+) terminal. You should always use the remote positive (+) terminal instead of the positive (+) terminal on your battery.

⚠ CAUTION:

An electric fan can start up even when the engine is not running and can injure you. Keep hands, clothing and tools away from any underhood electric fan.

Downloaded from www.Manualslib.com manuals search engine

⚠ CAUTION:

Using a match near a battery can cause battery gas to explode. People have been hurt doing this, and some have been blinded. Use a flashlight if you need more light.

Be sure the battery has enough water. You do not need to add water to the battery installed in your new vehicle. But if a battery has filler caps, be sure the right amount of fluid is there. If it is low, add water to take care of that first. If you do not, explosive gas could be present.

Battery fluid contains acid that can burn you. Do not get it on you. If you accidentally get it in your eyes or on your skin, flush the place with water and get medical help immediately.

⚠ CAUTION:

Fans or other moving engine parts can injure you badly. Keep your hands away from moving parts once the engine is running.

5. Check that the jumper cables do not have loose or missing insulation. If they do, you could get a shock. The vehicles could be damaged too.

   Before you connect the cables, here are some basic things you should know. Positive (+) will go to positive (+) or to a remote positive (+) terminal if the vehicle has one. Negative (–) will go to a heavy, unpainted metal engine part or to a remote negative (–) terminal if the vehicle has one. Do not connect positive (+) to negative (–) or you will get a short that would damage the battery and maybe other parts too. And do not connect the negative (–) cable to the negative (–) terminal on the dead battery because this can cause sparks.

Downloaded from www.Manualslib.com manuals search engine

6. Connect the red positive (+) cable to the positive (+) terminal of the dead battery. Use a remote positive (+) terminal if the vehicle has one.
7. Do not let the other end touch metal. Connect it to the positive (+) terminal of the good battery. Use a remote positive (+) terminal if the vehicle has one.
8. Now connect the black negative (–) cable to the negative (–) terminal of the good battery. Use a remote negative (–) terminal if the vehicle has one.

   Do not let the other end touch anything until the next step. The other end of the negative (–) cable *does not* go to the dead battery. It goes to a heavy, unpainted metal engine part, or to a remote negative (–) terminal on the vehicle with the dead battery.
9. Connect the other end of the negative (–) cable at least 18 inches (45 cm) away from the dead battery, but not near engine parts that move. The electrical connection is just as good there, and the chance of sparks getting back to the battery is much less.
10. Now start the vehicle with the good battery and run the engine for a while.
11. Try to start the vehicle that had the dead battery. If it will not start after a few tries, it probably needs service.

Notice: **If the jumper cables are removed in the wrong order, electrical shorting may occur and damage the vehicle. The repairs would not be covered by your warranty. Remove the jumper cables in the correct order, making sure that the cables do not touch each other or other metal.**

Downloaded from www.Manualslib.com manuals search engine

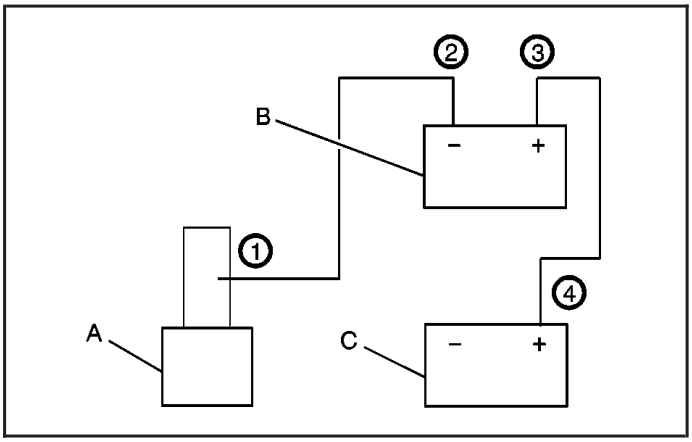

Jumper Cable Removal

A. Heavy, Unpainted Metal Engine Part
B. Good Battery or Remote Positive (+) Terminal
C. Dead Battery or Remote Positive (+) Terminal

To disconnect the jumper cables from both vehicles, do the following:

1. Disconnect the black negative (–) cable from the vehicle that had the dead battery.
2. Disconnect the black negative (–) cable from the vehicle with the good battery.
3. Disconnect the red positive (+) cable from the vehicle with the good battery.
4. Disconnect the red positive (+) cable from the other vehicle.
5. Return the remote positive (+) terminal cover to its original position.

Downloaded from www.Manualslib.com manuals search engine

Bulb Replacement

For the proper type of replacement bulbs, see *Replacement Bulbs on page 5-50*.

For any bulb changing procedure not listed in this section, contact your dealer.

Halogen Bulbs

⚠ CAUTION:

Halogen bulbs have pressurized gas inside and can burst if you drop or scratch the bulb. You or others could be injured. Be sure to read and follow the instructions on the bulb package.

Headlamps

1. Open the hood.
2. Remove the front turn signal/parking lamp assembly. See *Front Turn Signal, Sidemarker and Parking Lamps on page 5-46*.
3. Pull the assembly away from the vehicle.

4. Unscrew the black retainer ring that holds the bulb assembly in place.
5. Pull the bulb assembly straight up from the lamp housing.
6. Unhook the electrical connector by lifting up the blue tabs and pulling the bulb out.

Downloaded from www.Manualslib.com manuals search engine

7. Install the new bulb through the black retainer ring and into the electrical connector.
8. Tighten the black retainer ring in place. Push the bulb firmly enough so that the blue tabs hook over the tab on the bulb.

9. Carefully put the bulb assembly back into the lamp housing. Be careful not to damage the bulb on the headlamp aiming bar.

Downloaded from www.Manualslib.com manuals search engine

10. Align the pins on the bottom of the headlamp assembly with the holes in the lamp support bracket.
11. Reinstall the front turn signal/parking lamp assembly. See *Front Turn Signal, Sidemarker and Parking Lamps* next in this section.

Front Turn Signal, Sidemarker and Parking Lamps

1. Open the hood.

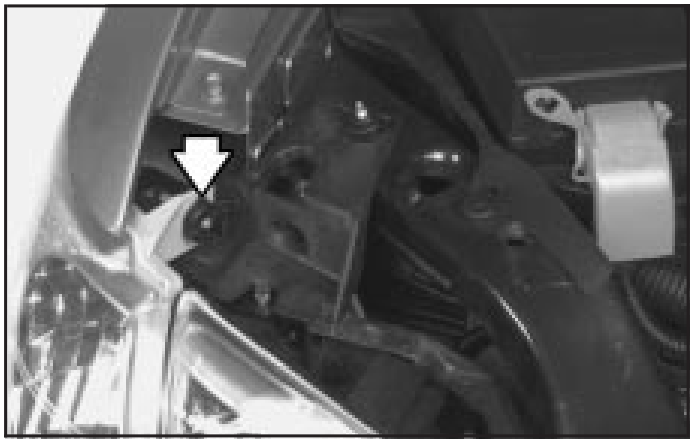

2. Remove the thumbscrew attaching the front turn signal/parking lamp assembly to the headlamp assembly.

Downloaded from www.Manualslib.com manuals search engine

Front Turn Signal/Parking Lamp

3. Pull the front turn signal/parking lamp assembly away from the vehicle.

Front Sidemarker Lamp

4. Unscrew the bulb socket from the lamp assembly by pressing the tab while turning it counterclockwise.
5. Replace the bulb by pulling the old one out and gently pushing the new one into the lamp socket.
6. Line up the tabs on the socket with the gaps in the socket holes and screw the bulb socket back into the lamp housing until a click is heard (the tab popping back out).

Downloaded from www.Manualslib.com manuals search engine

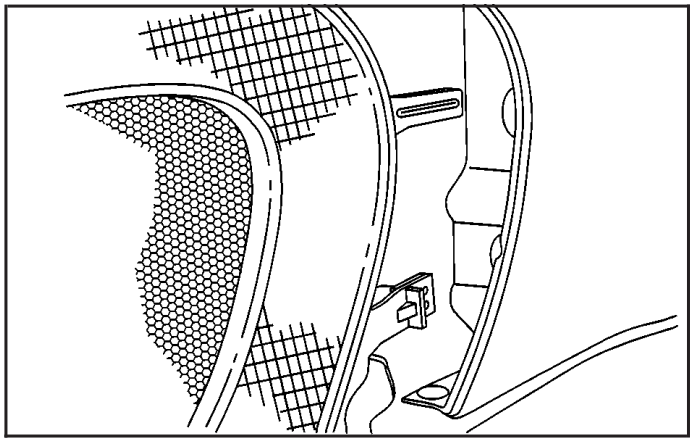

7. Line up and insert the tabs on the back of the assembly in the slots in the fender to reinstall the lamp assembly. Engage the lower clip on the back of the lamp assembly into the fender, keeping the upper tab on the front turn signal/parking lamp assembly inboard of the headlamp bracket tab.
8. Lift up the front turn signal/parking lamp assembly until the upper edge is contacting the fender to align the front turn signal/parking lamp assembly with the headlamp assembly.
9. Fasten the front turn signal/parking lamp assembly to the headlamp assembly with the thumbscrew removed in Step 2.

Taillamps, Turn Signal, Stoplamps and Back-up Lamps

1. Open the liftgate.
2. Remove the two screws from the taillamp housing on the inboard side.
3. Pull off the entire taillamp housing.

   The locator/retaining pins on the outboard side are part of the lamp assembly and will not be removed during this procedure.

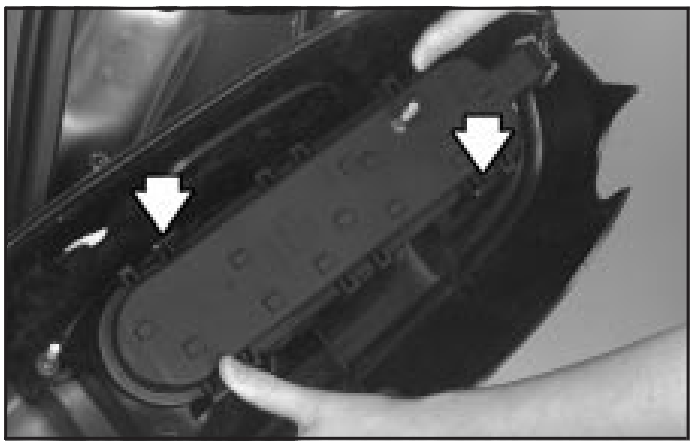

Downloaded from www.Manualslib.com manuals search engine

4. Remove the bulb holder by pressing the four retaining tabs and pulling the holder away from the assembly.

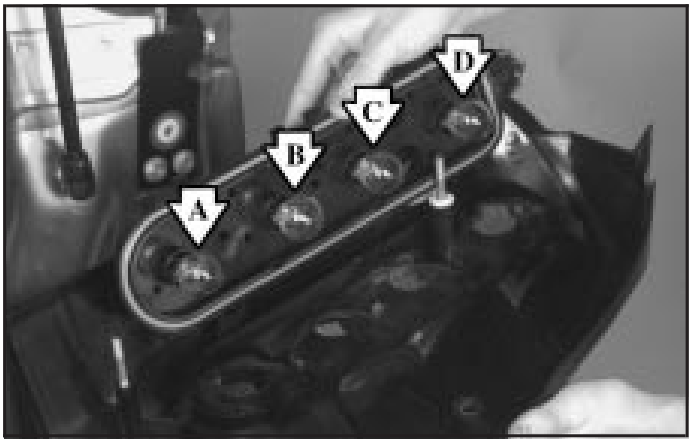

A. Taillamp Bulb
B. Back-up Lamp Bulb
C. Turn Signal Lamp Bulb
D. Stop/Taillamp Bulb

5. Replace the bulb by pulling the old bulb out and gently pushing the new bulb into the bulb holder socket.
6. Snap the bulb holder back into place, making sure all retaining tabs are properly over the bulb holder tabs.
7. Reinstall the taillamp assembly by inserting the outboard locating/retaining pins until the lamp is seated.
8. Secure with the inboard screws.

Downloaded from www.Manualslib.com manuals search engine

Replacement Bulbs

Exterior Lamp	Bulb Number
Back-up Lamps (3rd from Top)	3156
Front Sidemarker Lamps	194
Front Turn Signal/Parking Lamps	4157 NAK
Headlamps	9004-HBI
Stop/Taillamps (Top)	3057
Taillamps (Bottom)	3057
Turn Signal Lamps (2nd from Top)	3156

For replacement bulbs not listed here, consult your dealer.

Windshield Wiper Blade Replacement

Windshield wiper blades should be inspected at least twice a year for wear or cracking. See *Scheduled Maintenance on page 6-4* for more information.

Replacement blades come in different types and are removed in different ways. For proper type and length, see *Normal Maintenance Replacement Parts on page 6-14*.

To remove the windshield wiper blade(s):

1. Turn the wipers on to the lowest intermittent setting.
2. Turn the ignition to OFF while the wipers are at the outer position of the wipe pattern.
3. Pull the windshield wiper arm away from the windshield or backglass.

Downloaded from www.Manualslib.com manuals search engine

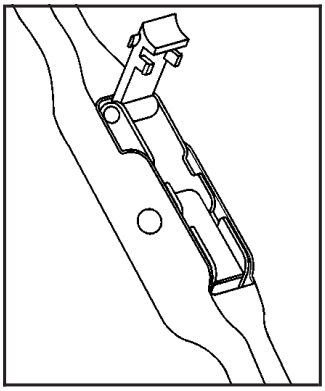

4. While holding the wiper arm away from the glass, push the release clip from under the blade.

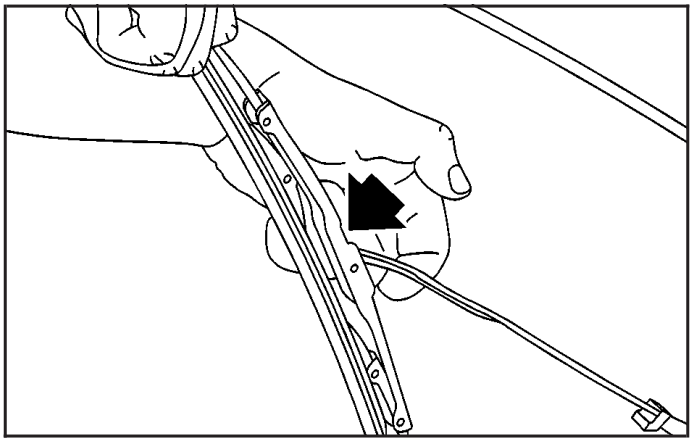

5. Push the release clip at the connecting point of the blade and the arm up. Then pull the blade assembly down toward the glass to remove it from the wiper arm.
6. Push the new wiper blade securely on the wiper arm until you hear the release clip “click” into place.
7. Push the release clip, from Step 4, down to secure the wiper blade into place.

Downloaded from www.Manualslib.com manuals search engine

Tires

Your new vehicle comes with high-quality tires made by a leading tire manufacturer. If you ever have questions about your tire warranty and where to obtain service, see your GM Warranty booklet for details. For additional information refer to the tire manufacturer's booklet included with your vehicle's Owner's Manual.

⚠ CAUTION:

Poorly maintained and improperly used tires are dangerous.

- **Overloading your tires can cause overheating as a result of too much friction. You could have an air-out and a serious accident. See *Loading Your Vehicle on page 4-29*.**
- **Underinflated tires pose the same danger as overloaded tires. The resulting accident could cause serious injury. Check all tires frequently to maintain the recommended pressure. Tire pressure should be checked when your tires are cold. See *Inflation - Tire Pressure on page 5-58*.**
- **Overinflated tires are more likely to be cut, punctured or broken by a sudden impact — such as when you hit a pothole. Keep tires at the recommended pressure.**
- **Worn, old tires can cause accidents. If your tread is badly worn, or if your tires have been damaged, replace them.**

Downloaded from www.Manualslib.com manuals search engine

Tire Sidewall Labelling

Useful information about a tire is molded into its sidewall. The examples below show a typical passenger vehicle tire and a compact spare tire sidewall.

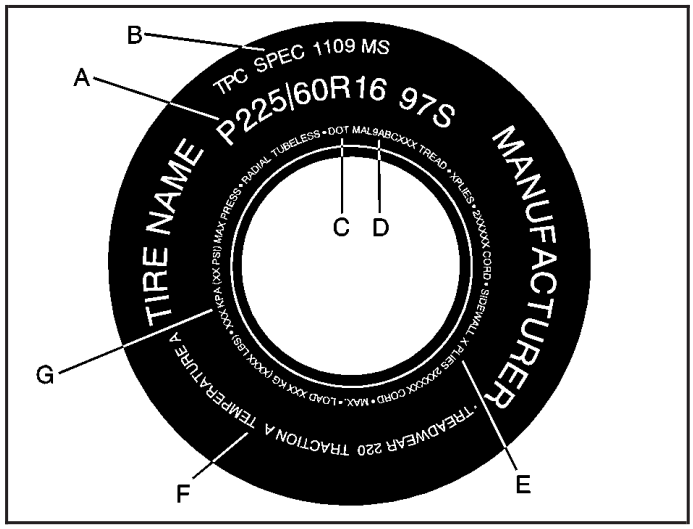

Passenger (P-Metric) Tire Example

(A) Tire Size: The tire size is a combination of letters and numbers used to define a particular tire's width, height, aspect ratio, construction type and service description. See the "Tire Size" illustration later in this section for more detail.

(B) TPC Spec (Tire Performance Criteria Specification): Original equipment tires designed to GM's specific tire performance criteria have a TPC specification code molded onto the sidewall. GM's TPC specifications meet or exceed all federal safety guidelines.

(C) DOT (Department of Transportation): The Department of Transportation (DOT) code indicates that the tire is in compliance with the U.S. Department of Transportation Motor Vehicle Safety Standards.

(D) Tire Identification Number (TIN): The letters and numbers following DOT (Department of Transportation) code is the Tire Identification Number (TIN). The TIN shows the manufacturer and plant code, tire size, and date the tire was manufactured. The TIN is molded onto both sides of the tire, although only one side may have the date of manufacture.

(E) Tire Ply Material: The type of cord and number of plies in the sidewall and under the tread.

(F) Uniform Tire Quality Grading (UTQG): Tire manufacturers are required to grade tires based on three performance factors: treadwear, traction and temperature resistance. For more information see *Uniform Tire Quality Grading on page 5-62*.

(G) Maximum Cold Inflation Load Limit: Maximum load that can be carried and the maximum pressure needed to support that load.

Downloaded from www.Manualslib.com manuals search engine

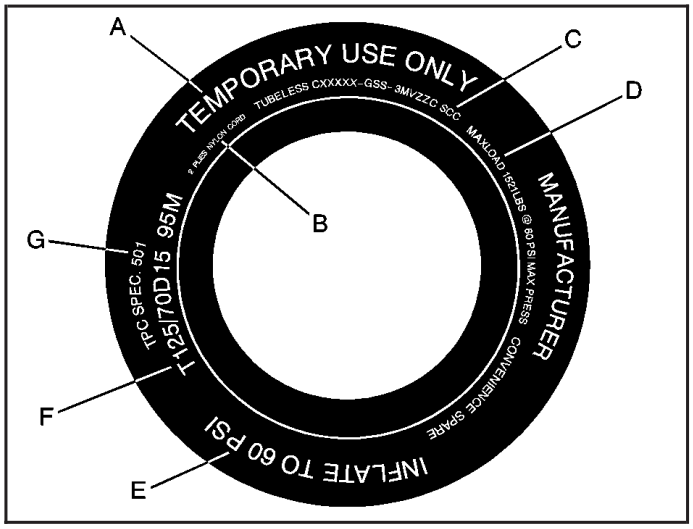

Compact Spare Tire Example

(A) Temporary Use Only: The compact spare tire or temporary use tire has a tread life of approximately 3,000 miles (5 000 km) and should not be driven at speeds over 65 mph (105 km/h). The compact spare tire is for emergency use when a regular road tire has lost air and gone flat. If your vehicle has a compact spare tire, see *Compact Spare Tire on page 5-82* and *If a Tire Goes Flat on page 5-68*.

(B) Tire Ply Material: The type of cord and number of plies in the sidewall and under the tread.

(C) Tire Identification Number (TIN): The letters and numbers following the DOT (Department of Transportation) code is the Tire Identification Number (TIN). The TIN shows the manufacturer and plant code, tire size, and date the tire was manufactured. The TIN is molded onto both sides of the tire, although only one side may have the date of manufacture.

(D) Maximum Cold Inflation Load Limit: Maximum load that can be carried and the maximum pressure needed to support that load.

(E) Tire Inflation: The temporary use tire or compact spare tire should be inflated to 60 psi (420 kPa). For more information on tire pressure and inflation see *Inflation - Tire Pressure on page 5-58*.

(F) Tire Size: A combination of letters and numbers define a tire's width, height, aspect ratio, construction type and service description. The letter T as the first character in the tire size means the tire is for temporary use only.

(G) TPC Spec (Tire Performance Criteria Specification): Original equipment tires designed to GM's specific tire performance criteria have a TPC specification code molded onto the sidewall. GM's TPC specifications meet or exceed all federal safety guidelines.

Downloaded from www.Manualslib.com manuals search engine

Tire Size

The following illustration shows an example of a typical passenger vehicle tire size.

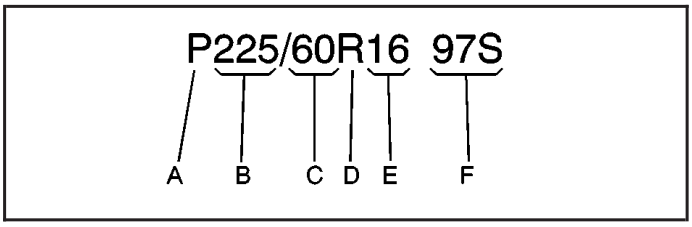

(A) Passenger (P-Metric) Tire: The United States version of a metric tire sizing system. The letter P as the first character in the tire size means a passenger vehicle tire engineered to standards set by the U.S. Tire and Rim Association.

(B) Tire Width: The three-digit number indicates the tire section width in millimeters from sidewall to sidewall.

(C) Aspect Ratio: A two-digit number that indicates the tire height-to-width measurements. For example, if the tire size aspect ratio is 60, as shown in item C of the illustration, it would mean that the tire's sidewall is 60 percent as high as it is wide.

(D) Construction Code: A letter code is used to indicate the type of ply construction in the tire. The letter R means radial ply construction; the letter D means diagonal or bias ply construction; and the letter B means belted-bias ply construction.

(E) Rim Diameter: Diameter of the wheel in inches.

(F) Service Description: These characters represent the load range and speed rating of the tire. The load index represents the load carry capacity a tire is certified to carry. The load index can range from 1 to 279. The speed rating is the maximum speed a tire is certified to carry a load. Speed ratings range from A to Z.

Tire Terminology and Definitions

Air Pressure: The amount of air inside the tire pressing outward on each square inch of the tire. Air pressure is expressed in pounds per square inch (psi) or kilopascal (kPa).

Accessory Weight: This means the combined weight of optional accessories. Some examples of optional accessories are, automatic transmission, power steering, power brakes, power windows, power seats, and air conditioning.

Downloaded from www.Manualslib.com manuals search engine

Aspect Ratio: The relationship of a tire's height to its width.

Belt: A rubber coated layer of cords that is located between the plies and the tread. Cords may be made from steel or other reinforcing materials.

Bead: The tire bead contains steel wires wrapped by steel cords that hold the tire onto the rim.

Bias Ply Tire: A pneumatic tire in which the plies are laid at alternate angles less than 90 degrees to the centerline of the tread.

Cold Inflation Pressure: The amount of air pressure in a tire, measured in pounds per square inch (psi) or kilopascals (kPa) before a tire has built up heat from driving. See *Inflation - Tire Pressure on page 5-58*.

Curb Weight: This means the weight of a motor vehicle with standard and optional equipment including the maximum capacity of fuel, oil and coolant, but without passengers and cargo.

DOT Markings: A code molded into the sidewall of a tire signifying that the tire is in compliance with the U.S. Department of Transportation (DOT) motor vehicle safety standards. The DOT code includes the Tire Identification Number (TIN), an alphanumeric designator which can also identify the tire manufacturer, production plant, brand and date of production.

GVWR: Gross Vehicle Weight Rating, see *Loading Your Vehicle on page 4-29*.

GAWR FRT: Gross Axle Weight Rating for the front axle, see *Loading Your Vehicle on page 4-29*.

GAWR RR: Gross Axle Weight Rating for the rear axle, see *Loading Your Vehicle on page 4-29*.

Intended Outboard Sidewall: The side of an asymmetrical tire, that must always face outward when mounted on a vehicle.

KiloPascal (kPa): The metric unit for air pressure.

Light Truck (LT-Metric) Tire: A tire used on light duty trucks and some multipurpose passenger vehicles.

Load Index: An assigned number ranging from 1 to 279 that corresponds to the load carrying capacity of a tire.

Maximum Inflation Pressure: The maximum air pressure to which a cold tire may be inflated. The maximum air pressure is molded onto the sidewall.

Maximum Load Rating: The load rating for a tire at the maximum permissible inflation pressure for that tire.

Maximum Loaded Vehicle Weight: The sum of curb weight; accessory weight; vehicle capacity weight; and production options weight.

Downloaded from www.Manualslib.com manuals search engine

Normal Occupant Weight: The number of occupants a vehicle is designed to seat multiplied by 150 lbs (68 kg). See *Loading Your Vehicle on page 4-29*.

Occupant Distribution: Designated seating positions.

Outward Facing Sidewall: The side of an asymmetrical tire that has a particular side that faces outward when mounted on a vehicle. The side of the tire that contains a whitewall, bears white lettering or bears manufacturer, brand, and/or model name molding that is higher or deeper than the same moldings on the other sidewall of the tire.

Passenger (P-Metric) Tire: A tire used on passenger cars and some light duty trucks and multipurpose vehicles.

Recommended Inflation Pressure: Vehicle manufacturer's recommended tire inflation pressure and shown on the tire placard. See *Inflation - Tire Pressure on page 5-58* and *Loading Your Vehicle on page 4-29*.

Radial Ply Tire: A pneumatic tire in which the ply cords that extend to the beads are laid at 90 degrees to the centerline of the tread.

Rim: A metal support for a tire and upon which the tire beads are seated.

Sidewall: The portion of a tire between the tread and the bead.

Speed Rating: An alphanumeric code assigned to a tire indicating the maximum speed at which a tire can operate.

Traction: The friction between the tire and the road surface. The amount of grip provided.

Tread: The portion of a tire that comes into contact with the road.

Treadwear Indicators: Narrow bands, sometimes called "wear bars," that show across the tread of a tire when only 1/16 inch (1.6 mm) of tread remains. See *When It Is Time for New Tires on page 5-60*.

UTQGS (Uniform Tire Quality Grading Standards): A tire information system that provides consumers with ratings for a tire's traction, temperature, and treadwear. Ratings are determined by tire manufacturers using government testing procedures. The ratings are molded into the sidewall of the tire. See *Uniform Tire Quality Grading on page 5-62*.

Vehicle Capacity Weight: The number of designated seating positions multiplied by 150 lbs (68 kg) plus the rated cargo load. See *Loading Your Vehicle on page 4-29*.

Downloaded from www.Manualslib.com manuals search engine

Vehicle Maximum Load on the Tire: Load on an individual tire due to curb weight, accessory weight, occupant weight, and cargo weight.

Vehicle Placard: A label permanently attached to a vehicle showing the original equipment tire size and recommended inflation pressure. See *Loading Your Vehicle on page 4-29*.

Inflation - Tire Pressure

Tires need the correct amount of air pressure to operate effectively.

Notice: **Do not let anyone tell you that under-inflation or over-inflation is all right. It is not. If your tires do not have enough air (under-inflation), you can get the following:**

- **Too much flexing**
- **Too much heat**
- **Tire overloading**
- **Premature or irregular wear**
- **Poor handling**
- **Reduced fuel economy**

If your tires have too much air (over-inflation), you can get the following:

- **Unusual wear**
- **Poor handling**
- **Rough ride**
- **Needless damage from road hazards**

A Tire and Loading Information label is attached to the vehicle's center pillar (B-pillar), below the driver's door latch. This label shows your vehicle's original equipment tires and the correct inflation pressures for your tires when they are cold. The recommended cold tire inflation pressure, shown on the label, is the minimum amount of air pressure needed to support your vehicle's maximum load carrying capacity.

For additional information regarding how much weight your vehicle can carry, and an example of the tire and loading information label, see *Loading Your Vehicle on page 4-29*. How you load your vehicle affects vehicle handling and ride comfort, never load your vehicle with more weight than it was designed to carry.

When to Check

Check your tires once a month or more. Do not forget to check the compact spare tire, it should be at 60 psi (420 kPa). For additional information regarding the compact spare tire, see *Compact Spare Tire on page 5-82*.

Downloaded from www.Manualslib.com manuals search engine

How to Check

Use a good quality pocket-type gage to check tire pressure. You cannot tell if your tires are properly inflated simply by looking at them. Radial tires may look properly inflated even when they are under-inflated. Check the tire's inflation pressure when the tires are cold. Cold means your vehicle has been sitting for at least three hours or driven no more than 1 mile (1.6 km).

Remove the valve cap from the tire valve stem. Press the tire gage firmly onto the valve to get a pressure measurement. If the cold tire inflation pressure matches the recommended pressure on the Tire and Loading Information label, no further adjustment is necessary. If the inflation pressure is low, add air until you reach the recommended amount.

If you overfill the tire, release air by pushing on the metal stem in the center of the tire valve. Re-check the tire pressure with the tire gage.

Be sure to put the valve caps back on the valve stems. They help prevent leaks by keeping out dirt and moisture.

Tire Inspection and Rotation

Tires should be rotated every 5,000 to 8,000 miles (8 000 to 13 000 km).

Any time you notice unusual wear, rotate your tires as soon as possible and check wheel alignment. Also check for damaged tires or wheels. See *When It Is Time for New Tires on page 5-60* and *Wheel Replacement on page 5-64* for more information.

The purpose of regular rotation is to achieve more uniform wear for all tires on the vehicle. The first rotation is the most important. See *Scheduled Maintenance on page 6-4*.

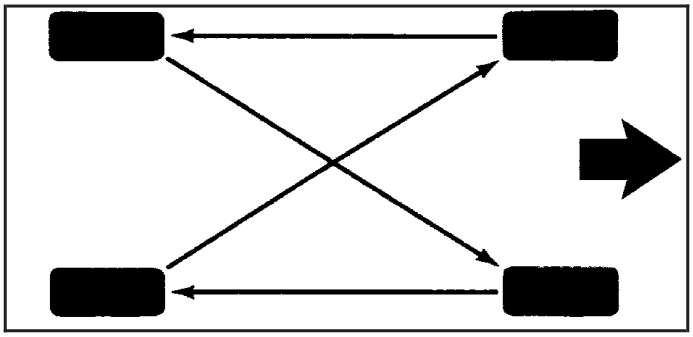

When rotating your tires, always use the correct rotation pattern shown here.

Downloaded from www.Manualslib.com manuals search engine

Do not include the compact spare tire in your tire rotation.

After the tires have been rotated, adjust the front and rear inflation pressures as shown on the Tire and Loading Information label.

Make certain that all wheel nuts are properly tightened. See “Wheel Nut Torque” under *Capacities and Specifications on page 5-99*.

⚠ CAUTION:

Rust or dirt on a wheel, or on the parts to which it is fastened, can make wheel nuts become loose after a time. The wheel could come off and cause an accident. When you change a wheel, remove any rust or dirt from places where the wheel attaches to the vehicle. In an emergency, you can use a cloth or a paper towel to do this; but be sure to use a scraper or wire brush later, if you need to, to get all the rust or dirt off. See *Changing a Flat Tire on page 5-68*.

When It Is Time for New Tires

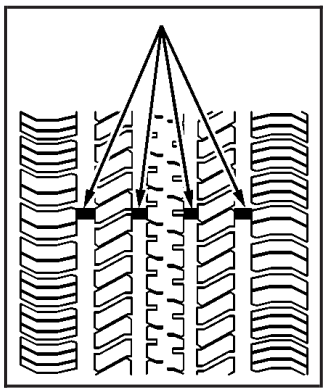

One way to tell when it’s time for new tires is to check the treadwear indicators, which will appear when your tires have only 1/16 inch (1.6 mm) or less of tread remaining.

You need a new tire if any of the following statements are true:

- You can see the indicators at three or more places around the tire.
- You can see cord or fabric showing through the tire’s rubber.
- The tread or sidewall is cracked, cut or snagged deep enough to show cord or fabric.
- The tire has a bump, bulge or split.
- The tire has a puncture, cut or other damage that can’t be repaired well because of the size or location of the damage.

Downloaded from www.Manualslib.com manuals search engine

Buying New Tires

To find out what kind and size of tires you need, look at the Certification/Tire label or the Tire and Loading Information label. See *Loading Your Vehicle on page 4-29*, for examples of the labels and where they can be found on your vehicle.

The tires installed on your vehicle when it was new had a Tire Performance Criteria Specification (TPC Spec) number on each tire's sidewall. When you get new tires, GM recommends that you get tires with that same TPC Spec number. That way your vehicle will continue to have tires that are designed to give proper endurance, handling, speed rating, traction, ride and other things during normal service on your vehicle. If your tires have an all-season tread design, the TPC number will be followed by an "MS" (for mud and snow).

If you ever replace your tires with those not having a TPC Spec number, make sure they are the same size, load range, speed rating and construction type (bias, bias-belted or radial) as your original tires.

⚠ CAUTION:

Mixing tires could cause you to lose control while driving. If you mix tires of different sizes or types (radial and bias-belted tires), the vehicle may not handle properly, and you could have a crash. Using tires of different sizes may also cause damage to your vehicle. Be sure to use the same size and type tires on all wheels. It's all right to drive with your compact spare temporarily, it was developed for use on your vehicle. See *Compact Spare Tire on page 5-82*.

⚠ CAUTION:

If you use bias-ply tires on your vehicle, the wheel rim flanges could develop cracks after many miles of driving. A tire and/or wheel could fail suddenly, causing a crash. Use only radial-ply tires with the wheels on your vehicle.

Downloaded from www.Manualslib.com manuals search engine

Uniform Tire Quality Grading

Quality grades can be found where applicable on the tire sidewall between tread shoulder and maximum section width. For example:

Treadwear 200 Traction AA Temperature A

The following information relates to the system developed by the United States National Highway Traffic Safety Administration, which grades tires by treadwear, traction and temperature performance. (This applies only to vehicles sold in the United States.) The grades are molded on the sidewalls of most passenger car tires. The Uniform Tire Quality Grading system does not apply to deep tread, winter-type snow tires, space-saver or temporary use spare tires, tires with nominal rim diameters of 10 to 12 inches (25 to 30 cm), or to some limited-production tires.

While the tires available on General Motors passenger cars and light trucks may vary with respect to these grades, they must also conform to federal safety requirements and additional General Motors Tire Performance Criteria (TPC) standards.

Treadwear

The treadwear grade is a comparative rating based on the wear rate of the tire when tested under controlled conditions on a specified government test course. For example, a tire graded 150 would wear one and a half (1.5) times as well on the government course as a tire graded 100. The relative performance of tires depends upon the actual conditions of their use, however, and may depart significantly from the norm due to variations in driving habits, service practices and differences in road characteristics and climate.

Traction – AA, A, B, C

The traction grades, from highest to lowest, are AA, A, B, and C. Those grades represent the tire's ability to stop on wet pavement as measured under controlled conditions on specified government test surfaces of asphalt and concrete. A tire marked C may have poor traction performance. Warning: The traction grade assigned to this tire is based on straight-ahead braking traction tests, and does not include acceleration, cornering, hydroplaning, or peak traction characteristics.

Downloaded from www.Manualslib.com manuals search engine

Temperature – A, B, C

The temperature grades are A (the highest), B, and C, representing the tire's resistance to the generation of heat and its ability to dissipate heat when tested under controlled conditions on a specified indoor laboratory test wheel. Sustained high temperature can cause the material of the tire to degenerate and reduce tire life, and excessive temperature can lead to sudden tire failure. The grade C corresponds to a level of performance which all passenger car tires must meet under the Federal Motor Vehicle Safety Standard No. 109. Grades B and A represent higher levels of performance on the laboratory test wheel than the minimum required by law.

Warning: The temperature grade for this tire is established for a tire that is properly inflated and not overloaded. Excessive speed, underinflation, or excessive loading, either separately or in combination, can cause heat buildup and possible tire failure.

Wheel Alignment and Tire Balance

The wheels on your vehicle were aligned and balanced carefully at the factory to give you the longest tire life and best overall performance.

If you notice unusual tire wear or your vehicle pulling one way or the other, the alignment may need to be reset. If you notice your vehicle vibrating when driving on a smooth road, your wheels may need to be rebalanced.

Downloaded from www.Manualslib.com manuals search engine

Wheel Replacement

Replace any wheel that is bent, cracked or badly rusted or corroded. If wheel nuts keep coming loose, the wheel, wheel bolts and wheel nuts should be replaced. If the wheel leaks air, replace it (except some aluminum wheels, which can sometimes be repaired). See your dealer if any of these conditions exist.

Your dealer will know the kind of wheel you need.

Each new wheel should have the same load-carrying capacity, diameter, width, offset and be mounted the same way as the one it replaces.

If you need to replace any of your wheels, wheel bolts or wheel nuts, replace them only with new GM original equipment parts. This way, you will be sure to have the right wheel, wheel bolts and wheel nuts for your vehicle.

⚠ CAUTION:

Using the wrong replacement wheels, wheel bolts or wheel nuts on your vehicle can be dangerous. It could affect the braking and handling of your vehicle, make your tires lose air and make you lose control. You could have a collision in which you or others could be injured. Always use the correct wheel, wheel bolts and wheel nuts for replacement.

Notice: **The wrong wheel can also cause problems with bearing life, brake cooling, speedometer or odometer calibration, headlamp aim, bumper height, vehicle ground clearance and tire or tire chain clearance to the body and chassis.**

See *Changing a Flat Tire on page 5-68* for more information.

Downloaded from www.Manualslib.com manuals search engine

Used Replacement Wheels

⚠ CAUTION:

Putting a used wheel on your vehicle is dangerous. You can't know how it's been used or how far it's been driven. It could fail suddenly and cause a crash. If you have to replace a wheel, use a new GM original equipment wheel.

Tire Chains

Notice: **Use tire chains only where legal and only when you must. Use only SAE Class "S" type chains that are the proper size for your tires. Install them on the front tires and tighten them as tightly as possible with the ends securely fastened. Drive slowly and follow the chain manufacturer's instructions. If you can hear the chains contacting your vehicle, stop and retighten them. If the contact continues, slow down until it stops. Driving too fast or spinning the wheels with chains on will damage your vehicle.**

Downloaded from www.Manualslib.com manuals search engine

Accessory Inflator

Your vehicle may have an accessory inflator. With it, you can inflate things like air mattresses and basketballs, and you can also use it to bring your tires up to the proper pressure.

The accessory inflator is located in the rear compartment on the driver's side. To remove the protective cap, pull the tab on the cap.

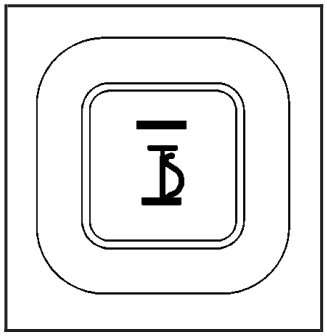

This symbol is on the accessory inflator switch.

There may be an accessory inflator kit stored in the glove box. It includes a 20-foot (6 m) hose with an air pressure gage and nozzle adapters.

⚠ CAUTION:

Inflating something too much can make it explode, and you or others could be injured. Be sure to read the inflator instructions, and inflate any object only to its recommended pressure.

To use your accessory inflator system, do the following:

1. Turn the ignition to ACCESSORY or RUN.
2. Attach the appropriate nozzle adapter, if required, to the end of the hose that has the pressure gage.
3. Attach that end of the hose to the object you wish to inflate.
4. Remove the protective cap covering the outlet.
5. Attach the other end of the hose to the outlet.
6. Press the accessory inflator switch. The light in the switch will come on to show the system is working.

Downloaded from www.Manualslib.com manuals search engine

If the accessory inflator system does not turn on or the light does not come on, the fuse may be blown or installed incorrectly. See *Fuses and Circuit Breakers on page 5-93* or see your dealer for service.

Your accessory inflator will automatically shut off after about 10 minutes. The light in the switch will blink. After about one minute you can use the system again. Press the switch and the indicator light will come on.

Notice: **If you run the accessory inflator longer than 30 minutes at a time, you could damage the inflator. The repairs would not be covered by your warranty. Run the inflator for short periods of time only.**

After running the accessory inflator for 30 minutes, wait at least 10 minutes before restarting the accessory inflator.

To turn off the inflator, do the following:

1. Press the switch and detach the hose, first from the inflated object, then from the outlet.
2. Put the protective cap back on.
3. Place the inflator kit tools in the pouch, and store in the glove box.

To put the cap back on, line up the tabs at the back of the cover and put it in place. Push down the tab to secure the cap.

Downloaded from www.Manualslib.com manuals search engine

If a Tire Goes Flat

It's unusual for a tire to "blowout" while you're driving, especially if you maintain your tires properly. If air goes out of a tire, it's much more likely to leak out slowly. But if you should ever have a "blowout," here are a few tips about what to expect and what to do:

If a front tire fails, the flat tire will create a drag that pulls the vehicle toward that side. Take your foot off the accelerator pedal and grip the steering wheel firmly. Steer to maintain lane position, and then gently brake to a stop well out of the traffic lane.

A rear blowout, particularly on a curve, acts much like a skid and may require the same correction you'd use in a skid. In any rear blowout, remove your foot from the accelerator pedal. Get the vehicle under control by steering the way you want the vehicle to go. It may be very bumpy and noisy, but you can still steer. Gently brake to a stop, well off the road if possible.

⚠ CAUTION:

Lifting a vehicle and getting under it to do maintenance or repairs is dangerous without the appropriate safety equipment and training. The jack provided with your vehicle is designed only for changing a flat tire. If it is used for anything else, you or others could be badly injured or killed if the vehicle slips off the jack. Use the jack provided with your vehicle only for changing a flat tire.

If a tire goes flat, the next part shows how to use your jacking equipment to change a flat tire safely.

Changing a Flat Tire

If a tire goes flat, avoid further tire and wheel damage by driving slowly to a level place. Turn on your hazard warning flashers.

Downloaded from www.Manualslib.com manuals search engine

⚠ CAUTION:

Changing a tire can be dangerous. The vehicle can slip off the jack and roll over or fall on you or other people. You and they could be badly injured or even killed. Find a level place to change your tire. To help prevent the vehicle from moving:

1. **Set the parking brake firmly.**
2. **Put the shift lever in PARK (P).**
3. **Turn off the engine and do not restart while the vehicle is raised.**
4. **Do not allow passengers to remain in the vehicle.**

To be even more certain the vehicle will not move, you should put blocks at the front and rear of the tire farthest away from the one being changed. That would be the tire, on the other side, at the opposite end of the vehicle.

When you have a flat tire, use the following example as a guide to assist you in the placement of wheel blocks.

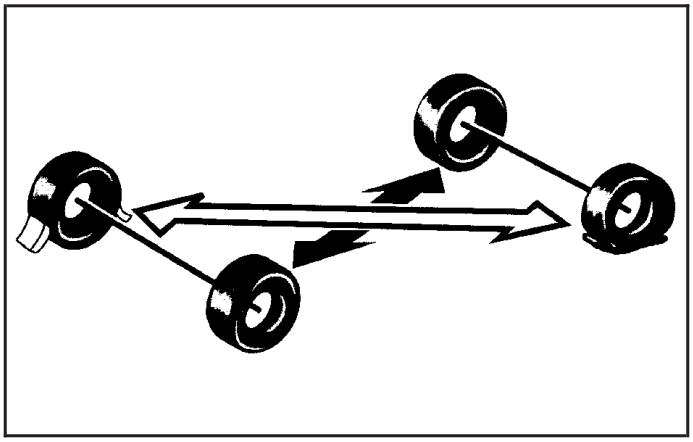

The following information will tell you next how to use the jack and change a tire.

Downloaded from www.Manualslib.com manuals search engine

Removing the Spare Tire and Tools

The tools you will need are located in the storage compartment at the rear of the vehicle, on the passenger's side.

To remove the tools, do the following:

1. Remove the side convenience net.
2. Open the jack storage compartment by lifting up the tab and pulling the cover off.

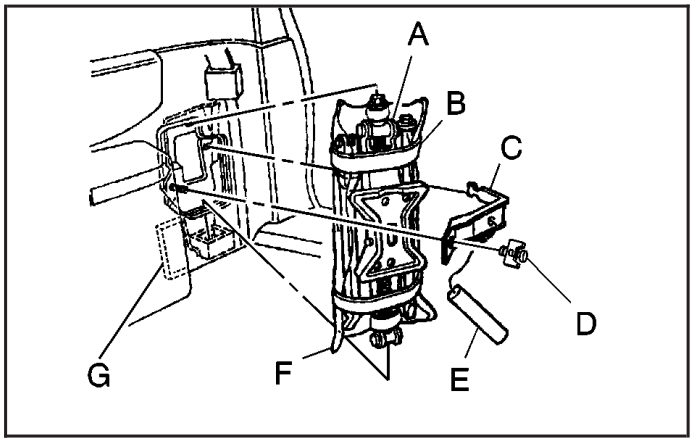

A. Jack
B. Strap
C. Bracket
D. Wing Nut
E. Jacking Instructions
F. Bag and Tools
G. Tire Bag and Cable

3. Remove the jack and jacking tools by loosening the wing nut and bracket.
4. Separate the plastic pouch from the jack and remove the jacking tools, including the folding wrench and extension, from the pouch.

Downloaded from www.Manualslib.com manuals search engine

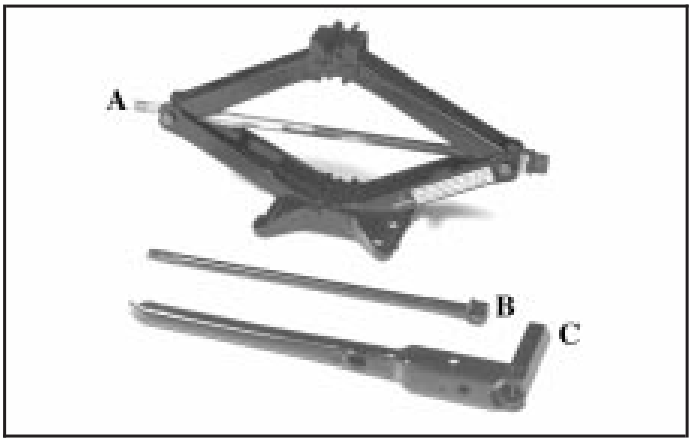

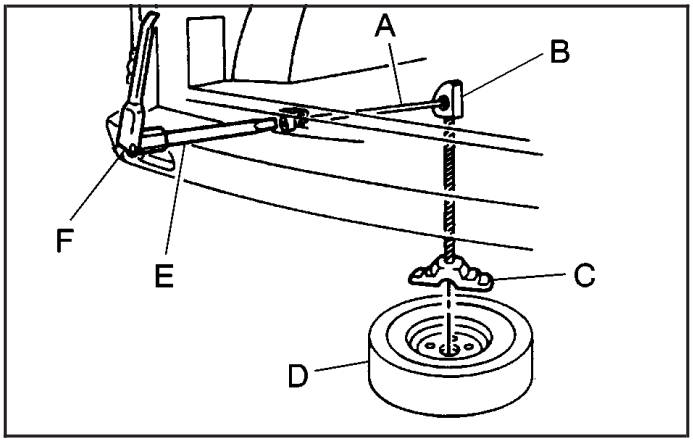

The tools you will be using include the jack (A), extension (B) and folding wrench (C).

The compact spare tire is located under the rear of the vehicle. See *Compact Spare Tire on page 5-82* for more information about the compact spare.

To remove the compact spare tire, do the following:

A. Hoist Shaft
B. Hoist Assembly
C. Retainer
D. Compact Spare Tire
E. Extension (Chisel End)
F. Folding Wrench

1. Attach the folding wrench to the extension and insert the chisel end on an angle through the hole in the rear bumper and into the hoist shaft.
2. Turn the folding wrench counterclockwise to lower the compact spare tire to the ground. Continue to turn the wrench so the compact spare tire can be pulled out from under the vehicle.

Downloaded from www.Manualslib.com manuals search engine

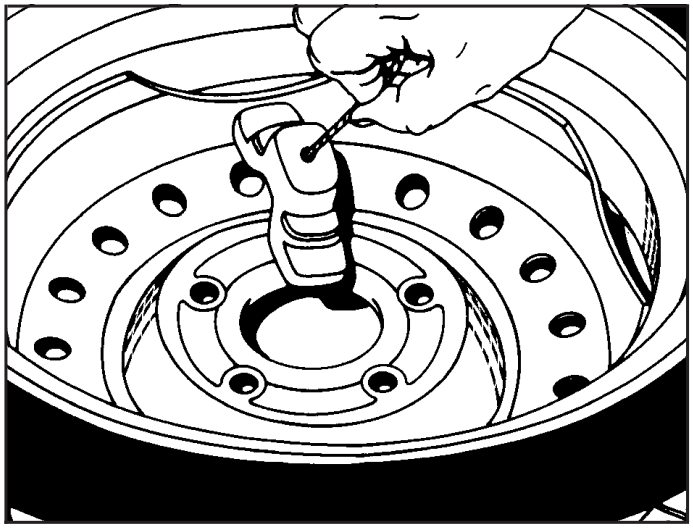

3. Tilt the retainer at the end of the cable to remove the compact spare tire from the cable, so it can be pulled up through the wheel opening.

The hoist is used to store a full-size or a flat road tire under the vehicle. See *Storing a Flat or Spare Tire and Tools on page 5-80*.

If the compact spare tire will not lower, check under the vehicle to see if the tire is hanging loose and the cable end and spring under the wheel plate are missing. If so, the secondary latch system is engaged. See *Secondary Latch System on page 5-78*.

To continue changing the flat tire, see *Removing the Flat Tire and Installing the Spare Tire on page 5-73*.

Downloaded from www.Manualslib.com manuals search engine

Removing the Flat Tire and Installing the Spare Tire

If the wheel has a center cap, use the handle of the folding wrench to pry it off. Then, with the other end of the folding wrench, loosen the nuts.

If your vehicle has the plastic bolt-on wheel covers, loosen the bolts completely using the folding wrench, and remove the wheel cover.

Once the center cap and/or wheel cover are removed, use the following steps to remove the flat tire and install the spare tire.

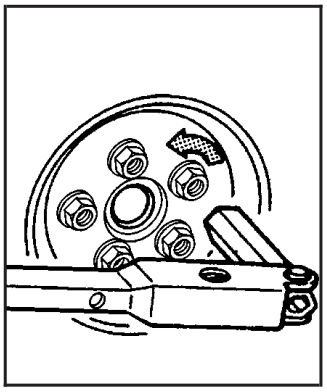

1. Loosen the wheel nuts — but do not remove them — using the folding wrench. Turn the handle about 180 degrees, then flip the handle back to the starting position. This avoids taking the wrench off the lug nut for each turn.

   For wheels with a wheel lock key, use the wheel lock key between the lock nut and folding wrench. The key is supplied in the front passenger door pocket.

Notice: **If your vehicle has wheel locks and you use an impact wrench to remove the wheel nuts, you could damage the lock nut or wheel lock key. Do not use an impact wrench to remove the wheel nuts if your vehicle has wheel locks.**

Downloaded from www.Manualslib.com manuals search engine

Notice: **If you use a jack to raise the vehicle without positioning it correctly, you could damage your vehicle. When raising your vehicle on a jack, avoid contact with the rear axle control arms.**

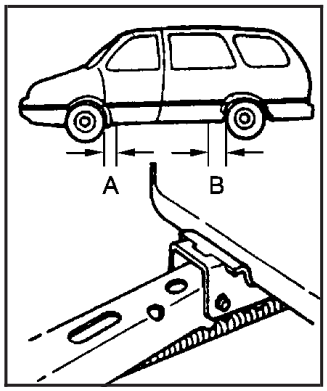

2. Near each wheel, there is a notch (A and B) in the vehicle's body. Position the jack and raise the jack head until it fits firmly into the notch in the vehicle's frame nearest the flat tire.

3. Do not raise the vehicle yet. Put the compact spare tire near you.

⚠ CAUTION:

Getting under a vehicle when it is jacked up is dangerous. If the vehicle slips off the jack you could be badly injured or killed. Never get under a vehicle when it is supported only by a jack.

⚠ CAUTION:

Raising your vehicle with the jack improperly positioned can damage the vehicle and even make the vehicle fall. To help avoid personal injury and vehicle damage, be sure to fit the jack lift head into the proper location before raising the vehicle.

Downloaded from www.Manualslib.com manuals search engine

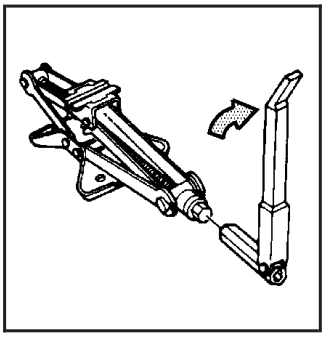

4. Attach the folding wrench to the jack, and turn the wrench clockwise to raise the jack head 3 inches (7.6 cm).

5. Raise the vehicle by turning the folding wrench clockwise in the jack. Raise the vehicle far enough off the ground so there is enough room for the compact spare tire to fit under the wheel well.
6. Remove all the wheel nuts and take off the flat tire.

⚠ CAUTION:

Rust or dirt on the wheel, or on the parts to which it is fastened, can make the wheel nuts become loose after a time. The wheel could come off and cause an accident. When you change a wheel, remove any rust or dirt from the places where the wheel attaches to the vehicle. In an emergency, you can use a cloth or a paper towel to do this; but be sure to use a scraper or wire brush later, if you need to, to get all the rust or dirt off.

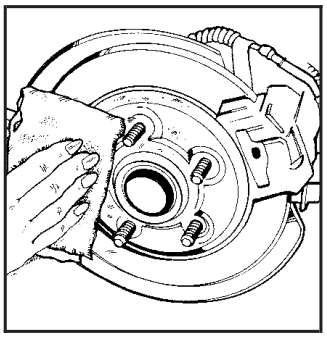

7. Remove any rust or dirt from the wheel bolts, mounting surfaces and spare wheel.

Downloaded from www.Manualslib.com manuals search engine

⚠ CAUTION:

Never use oil or grease on studs or nuts. If you do, the nuts might come loose. Your wheel could fall off, causing a serious accident.

8. Install the compact spare tire and put the wheel nuts back on with the rounded end of the nuts toward the wheel. Tighten each nut by hand until the wheel is held against the hub.

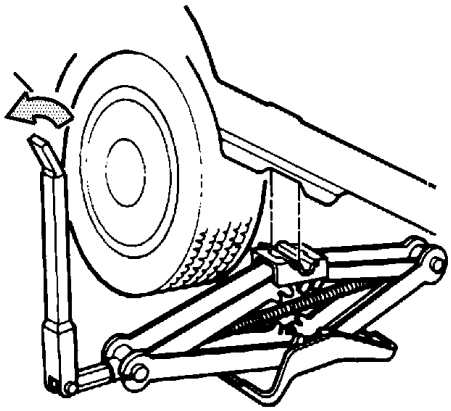

9. Lower the vehicle by attaching the folding wheel wrench to the jack and turning the wrench counterclockwise. Lower the jack completely.

Downloaded from www.Manualslib.com manuals search engine

⚠ CAUTION:

Incorrect wheel nuts or improperly tightened wheel nuts can cause the wheel to come loose and even come off. This could lead to an accident. Be sure to use the correct wheel nuts. If you have to replace them, be sure to get new GM original equipment wheel nuts. Stop somewhere as soon as you can and have the nuts tightened with a torque wrench to the proper torque specification. See *Capacities and Specifications on page 5-99* for wheel nut torque specification.

Notice: **Improperly tightened wheel nuts can lead to brake pulsation and rotor damage. To avoid expensive brake repairs, evenly tighten the wheel nuts in the proper sequence and to the proper torque specification. See *Capacities and Specifications on page 5-99* for the wheel nut torque specification.**

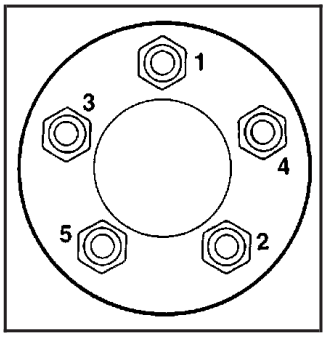

10. Tighten the wheel nuts firmly in a crisscross sequence, as shown.

Notice: **Wheel covers will not fit on your compact spare. If you try to put a wheel cover on the compact spare, you could damage the cover or the spare.**

11. Do not try to put a wheel cover on the compact spare tire. It will not fit. Store the wheel cover securely in the rear of the vehicle until you have the flat tire repaired or replaced.

Downloaded from www.Manualslib.com manuals search engine

Secondary Latch System

Your vehicle may have an underbody mounted tire hoist assembly equipped with a secondary latch system. It is designed to stop a tire from suddenly falling off your vehicle if the cable holding the spare tire is damaged. For the secondary latch to work, the tire must be stowed with the valve stem pointing down.

Your vehicle uses the underbody tire hoist assembly to store either the compact spare or a flat road tire. See *Storing a Flat or Spare Tire and Tools on page 5-80* for instructions on storing the spare or flat tire correctly.

⚠ CAUTION:

Before beginning this procedure read all the instructions. Failure to read and follow the instructions could damage the hoist assembly and you and others could get hurt. Read and follow the instructions listed below.

⚠ CAUTION:

Someone standing too close during the procedure could be injured by the jack. If the spare tire does not slide off the jack completely, make sure no one is behind you or on either side of you as you pull the jack out from the spare.

Downloaded from www.Manualslib.com manuals search engine

To release the spare tire from the secondary latch, do the following:

1. Place the jack under the vehicle, ahead of the rear bumper. Position the center lift point of the jack under the center of the compact spare tire.
2. Turn the folding wrench clockwise to raise the jack until it lifts the secondary latch device under the wheel plate.
3. Keep raising the jack until the compact spare tire stops moving upward and is held firmly in place, this lets you know that the secondary latch has released.
4. Lower the jack by turning the folding wrench counterclockwise. Keep lowering the jack until the compact spare tire is resting on the folding wrench.

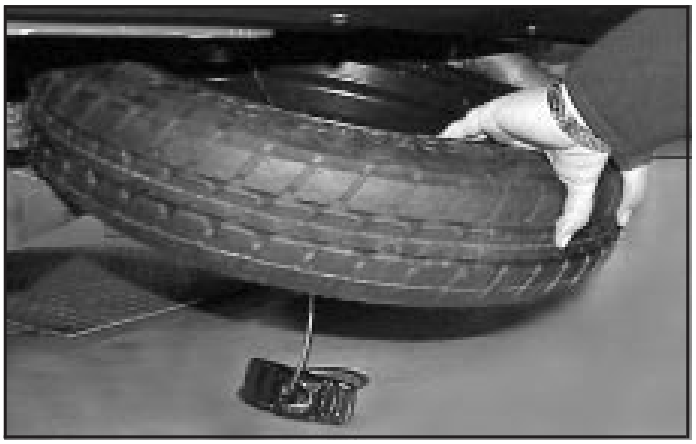

5. Grasp the compact spare tire with both hands and pull it out from under the vehicle.
6. Reach under the vehicle and remove the folding wrench and jack.

Have the hoist assembly inspected as soon as you can. You will not be able to store a spare or flat tire using the hoist assembly until it has been repaired or replaced.

Downloaded from www.Manualslib.com manuals search engine

Storing a Flat or Spare Tire and Tools

⚠ CAUTION:

Storing a jack, a tire, or other equipment in the passenger compartment of the vehicle could cause injury. In a sudden stop or collision, loose equipment could strike someone. Store all these in the proper place.

⚠ CAUTION:

The underbody-mounted spare tire needs to be stored with the valve stem pointing down. If the spare tire is stored with the valve stem pointing upwards, its secondary latch won't work properly and the spare tire could loosen and suddenly fall from your vehicle. If this happened when your vehicle was being driven, the tire might contact a person or another vehicle, causing injury and, of course, damage to itself as well. Be sure the underbody-mounted spare tire is stored with its valve stem pointing down.

Downloaded from www.Manualslib.com manuals search engine

1. Lay the tire near the rear of the vehicle with the valve stem down.
2. Remove the small center cap by tapping the back of the cap with the extension of the shaft, if the vehicle has aluminum wheels.
3. Slide the cable retainer through the center of the wheel and start to raise the tire.

   Make sure the retainer is fully seated across the underside of the wheel.
4. When the tire is almost in the stored position, turn the tire so the valve is towards the rear of the vehicle.

   This will help when you check and maintain tire pressure in the spare.
5. Raise the tire fully against the underside of the vehicle. Continue turning the folding wrench until you feel more than two clicks. This indicates that the compact spare tire is secure and the cable is tight. The spare tire hoist cannot be overtightened.

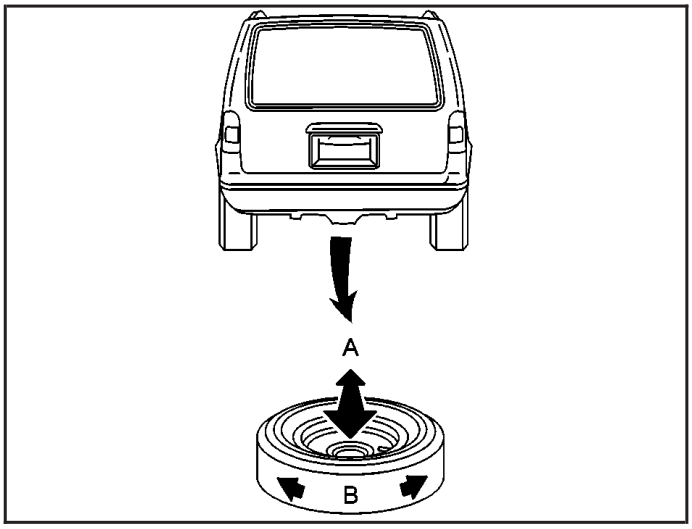

6. Make sure the tire is stored securely. Push, pull (A), and then try to turn (B) the tire. If the tire moves, use the folding wrench to tighten the cable.
7. Put back all tools as they were stored in the jack storage compartment and put the compartment cover back on.

   To put the cover back on, line up the tabs on the right of the cover with the slots in the cover opening. Push the cover in place and push down the tab so that it rests in the groove. This secures the cover in place.

Downloaded from www.Manualslib.com manuals search engine

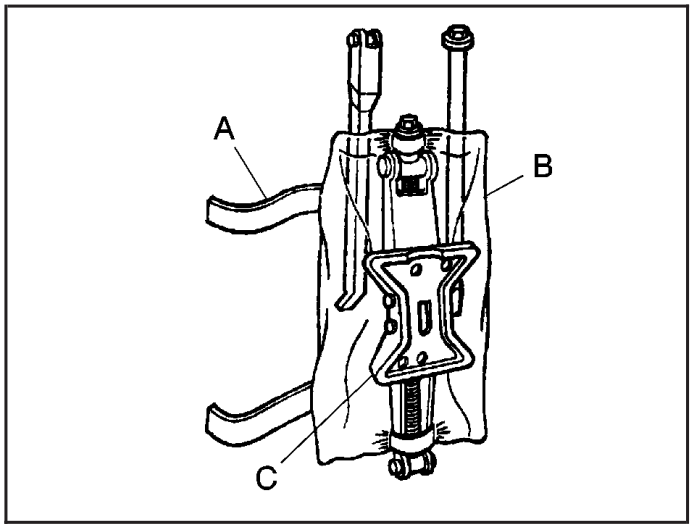

A. Strap

B. Bag and Tools

C. Jack

Store the center cap or the plastic bolt-on wheel covers until a full size tire is put back on the vehicle. When you replace the compact spare with a full-size tire, reinstall the bolt-on wheel covers or the center cap. Hand-tighten them over the wheel nuts, using the folding wrench.

Compact Spare Tire

Although the compact spare tire was fully inflated when the vehicle was new, it can lose air after a time. Check the inflation pressure regularly. It should be 60 psi (420 kPa).

After installing the compact spare on the vehicle, stop as soon as possible and make sure the spare tire is correctly inflated. The compact spare is made to perform well at speeds up to 65 mph (105 km/h) for distances up to 3,000 miles (5 000 km), so you can finish your trip and have the full-size tire repaired or replaced at your convenience. Of course, it is best to replace the spare with a full-size tire as soon as possible. The spare tire will last longer and be in good shape in case it is needed again.

Notice: **When the compact spare is installed, do not take your vehicle through an automatic car wash with guide rails. The compact spare can get caught on the rails. That can damage the tire and wheel, and maybe other parts of your vehicle.**

Do not use the compact spare on other vehicles.

And do not mix the compact spare tire or wheel with other wheels or tires. They will not fit. Keep the spare tire and its wheel together.

Notice: **Tire chains will not fit your compact spare. Using them can damage your vehicle and can damage the chains too. Do not use tire chains on your compact spare.**

Downloaded from www.Manualslib.com manuals search engine

Appearance Care

Cleaning products can be hazardous. Some are toxic. Other cleaning products can burst into flames if a match is struck near them or if they get on a hot part of the vehicle. Some are dangerous if their fumes are inhaled in a closed space. When anything from a container is used to clean the vehicle, be sure to follow the manufacturer's warnings and instructions. Always open the doors or windows of the vehicle when cleaning the inside.

Never use these to clean the vehicle:

- Gasoline
- Benzene
- Naphtha
- Carbon Tetrachloride
- Acetone
- Paint Thinner
- Turpentine
- Lacquer Thinner
- Nail Polish Remover

They can all be hazardous — some more than others — and they can all damage the vehicle, too.

Do not use any of these products unless this manual says you can. In many uses, these will damage the vehicle:

- Alcohol
- Laundry Soap
- Bleach
- Reducing Agents

Fabric/Carpet

Use a vacuum cleaner often to get rid of dust and loose dirt. Wipe vinyl, leather, plastic, and painted surfaces with a clean, damp cloth.

GM-approved cleaning products can be obtained from your dealer.

Here are some cleaning tips:

- Always read the instructions on the cleaner label.
- Clean up stains as soon as you can before they set.
- Carefully scrape off any excess stain.
- Use a clean cloth or sponge, and change to a clean area often. A soft brush may be used if stains are stubborn.
- To avoid forming a ring on fabric after spot cleaning, clean the entire area immediately or it will set.

Downloaded from www.Manualslib.com manuals search engine

Most stains can be removed with club soda water. To clean, use the following instructions:

1. For liquids: blot with a clean, soft, white cloth. For solids: remove as much as possible and then vacuum or brush.
2. Apply club soda water to a clean, soft, white cloth. Do not over-saturate; the cloth should not drip water.
3. Clean the entire area. Avoid getting the fabric too wet.
4. Start cleaning from the seams into the stain to avoid a ring effect.
5. Continue cleaning, using a clean area of the cloth each time it becomes soiled.
6. When the stain is removed, blot the cleaned area with another dry, clean, soft, white cloth.

Using Cleaner on Fabric

1. First, try the cleaner in an inconspicuous area to make sure the cleaner does not affect the color of the fabric.
2. For liquids: blot with a clean, soft, white cloth. For solids: remove as much as possible and then vacuum or brush.
3. Spray a small amount of the cleaner onto a clean soft, white, cloth. Do not apply spray directly to the fabric.
4. Start cleaning from the seams into the stain to avoid a ring effect.
5. Continue cleaning, using a clean area of the cloth each time it becomes soiled.
6. When the stain is removed, blot the cleaned area with another dry, clean, soft, white cloth.
7. If the cleaner leaves a ring effect, follow up with the club soda water instructions given earlier in this section.

Special Fabric Cleaning Problems

Stains caused by such things as catsup, black coffee, egg, fruit, fruit juice, milk, soft drinks, vomit, urine, and blood can be removed using the club soda water instructions given earlier in this section. If an odor lingers after cleaning vomit or urine, treat the area with a water and baking soda solution: 1 teaspoon (5 ml) of baking soda to 1 cup (250 ml) of lukewarm water. Let dry.

Stains caused by oil and grease can be cleaned with an approved GM cleaner and a clean, white cloth.

1. Carefully scrape off excess stain.
2. Clean with cool water and allow to dry completely.
3. If a stain remains, follow the cleaner instructions described earlier.

Downloaded from www.Manualslib.com manuals search engine

Vinyl

Use warm water and a clean cloth.

- Rub with a clean, damp cloth to remove dirt. This may have to be done more than once.
- Things like tar, asphalt, and shoe polish will stain if they are not removed quickly. Use a clean cloth and vinyl cleaner. See your dealer for this product.

Leather

Use a soft cloth with lukewarm water and a mild soap or saddle soap and wipe dry with a soft cloth. Then, let the leather dry naturally. Do not use heat to dry.

- For stubborn stains, use a leather cleaner.
- Never use oils, varnishes, solvent-based or abrasive cleaners, furniture polish, or shoe polish on leather.
- Soiled or stained leather should be cleaned immediately. If dirt is allowed to work into the finish, it can harm the leather.

Instrument Panel

Use only mild soap and water to clean the top surfaces of the instrument panel. Sprays containing silicones or waxes may cause annoying reflections in the windshield and even make it difficult to see through the windshield under certain conditions.

Interior Plastic Components

Use only a mild soap and water solution on a soft cloth or sponge. Commercial cleaners may affect the surface finish.

Child Restraint Pad

The built-in child restraint pad is attached to the seat frame with fastener strips. You can remove the pad and hand wash it with mild soap and water.

Glass Surfaces

Glass should be cleaned often. GM Glass Cleaner or a liquid household glass cleaner will remove normal tobacco smoke and dust films on interior glass. See *Vehicle Care/Appearance Materials on page 5-90*.

Downloaded from www.Manualslib.com manuals search engine

Notice: **If you use abrasive cleaners when cleaning glass surfaces on your vehicle, you could scratch the glass and/or cause damage to the rear window defogger and the integrated radio antenna. When cleaning the glass on your vehicle, use only a soft cloth and glass cleaner.**

Care of Safety Belts and Built-in Child Restraint Harness

Keep the safety belts and the built-in child restraint harness clean and dry.

⚠ CAUTION:

Do not bleach or dye safety belts or the built-in child restraint harness. If you do, they may be severely weakened. In a crash, they might not be able to provide adequate protection. Clean the safety belts and the child restraint harness only with mild soap and lukewarm water.

Weatherstrips

Silicone grease on weatherstrips will make them last longer, seal better, and not stick or squeak. Apply silicone grease with a clean cloth. During very cold, damp weather frequent application may be required. See *Recommended Fluids and Lubricants on page 6-12*.

Washing Your Vehicle

The paint finish on the vehicle provides beauty, depth of color, gloss retention, and durability.

The best way to preserve the vehicle's finish is to keep it clean by washing it often with lukewarm or cold water.

Do not wash the vehicle in the direct rays of the sun. Use a car washing soap. Do not use strong soaps or chemical detergents. Be sure to rinse the vehicle well, removing all soap residue completely. GM-approved cleaning products can be obtained from your dealer. See *Vehicle Care/Appearance Materials on page 5-90*. Do not use cleaning agents that are petroleum based, or that contain acid or abrasives. All cleaning agents should be flushed promptly and not allowed to dry on the surface, or they could stain. Dry the finish with a soft, clean chamois or an all-cotton towel to avoid surface scratches and water spotting.

High pressure car washes may cause water to enter the vehicle.

Downloaded from www.Manualslib.com manuals search engine

Cleaning Exterior Lamps/Lenses

Use only lukewarm or cold water, a soft cloth and a car washing soap to clean exterior lamps and lenses. Follow instructions under *Washing Your Vehicle on page 5-86*.

Finish Care

Occasional waxing or mild polishing of the vehicle by hand may be necessary to remove residue from the paint finish. GM-approved cleaning products can be obtained from your dealer. See *Vehicle Care/Appearance Materials on page 5-90*.

The vehicle has a “basecoat/clearcoat” paint finish. The clearcoat gives more depth and gloss to the colored basecoat. Always use waxes and polishes that are non-abrasive and made for a basecoat/clearcoat paint finish.

Notice: **Machine compounding or aggressive polishing on a basecoat/clearcoat paint finish may damage it. Use only non-abrasive waxes and polishes that are made for a basecoat/clearcoat paint finish on your vehicle.**

Foreign materials such as calcium chloride and other salts, ice melting agents, road oil and tar, tree sap, bird droppings, chemicals from industrial chimneys, etc., can damage the vehicle’s finish if they remain on painted surfaces. Wash the vehicle as soon as possible. If necessary, use non-abrasive cleaners that are marked safe for painted surfaces to remove foreign matter.

Exterior painted surfaces are subject to aging, weather, and chemical fallout that can take their toll over a period of years. To help keep the paint finish looking new, keep the vehicle in a garage or covered whenever possible.

Windshield, Backglass, and Wiper Blades

If the windshield is not clear after using the windshield washer, or if the wiper blade chatters when running, wax, sap or other material may be on the blade or windshield.

Clean the outside of the windshield with a full-strength glass cleaning liquid. The windshield is clean if beads do not form when you rinse it with water.

Grime from the windshield will stick to the wiper blades and affect their performance. Clean the blade by wiping vigorously with a cloth soaked in full-strength windshield washer solvent. Then rinse the blade with water.

Check the wiper blades and clean them as necessary; replace blades that look worn.

Downloaded from www.Manualslib.com manuals search engine

Aluminum Wheels

Notice: **If you use strong soaps, chemicals, abrasive polishes, cleaners, brushes, or cleaners that contain acid on aluminum or chrome-plated wheels, you could damage the surface of the wheel(s). The repairs would not be covered by your warranty. Use only GM-approved cleaners on aluminum or chrome-plated wheels.**

Keep the wheels clean using a soft clean cloth with mild soap and water. Rinse with clean water. After rinsing thoroughly, dry with a soft clean towel. A wax may then be applied.

Notice: **Using chrome polish on aluminum wheels could damage the wheels. The repairs would not be covered by your warranty. Use chrome polish on chrome wheels only.**

The surface of these wheels is similar to the painted surface of the vehicle. Do not use strong soaps, chemicals, abrasive polishes, abrasive cleaners, cleaners with acid, or abrasive cleaning brushes on them because the surface could be damaged. Do not use chrome polish on aluminum wheels.

Notice: **If you drive your vehicle through an automatic car wash that has silicone carbide tire cleaning brushes, you could damage the aluminum or chrome-plated wheels. The repairs would not be covered by your warranty. Never drive a vehicle equipped with aluminum or chrome-plated wheels through an automatic car wash that uses silicone carbide tire cleaning brushes.**

Do not take the vehicle through an automatic car wash that has silicone carbide tire cleaning brushes. These brushes can also damage the surface of these wheels.

Downloaded from www.Manualslib.com manuals search engine

Tires

To clean the tires, use a stiff brush with tire cleaner.

Notice: **Using petroleum-based tire dressing products on your vehicle may damage the paint finish and/or tires. When applying a tire dressing, always wipe off any overspray from all painted surfaces on your vehicle.**

Sheet Metal Damage

If the vehicle is damaged and requires sheet metal repair or replacement, make sure the body repair shop applies anti-corrosion material to parts repaired or replaced to restore corrosion protection.

Original manufacturer replacement parts will provide the corrosion protection while maintaining the warranty.

Finish Damage

Any stone chips, fractures or deep scratches in the finish should be repaired right away. Bare metal will corrode quickly and may develop into major repair expense.

Minor chips and scratches can be repaired with touch-up materials available from your GM dealer. Larger areas of finish damage can be corrected in your GM dealer's body and paint shop.

Underbody Maintenance

Chemicals used for ice and snow removal and dust control can collect on the underbody. If these are not removed, corrosion and rust can develop on the underbody parts such as fuel lines, frame, floor pan, and exhaust system even though they have corrosion protection.

At least every spring, flush these materials from the underbody with plain water. Clean any areas where mud and debris can collect. Dirt packed in close areas of the frame should be loosened before being flushed. Your GM dealer or an underbody car washing system can do this for you.

Chemical Paint Spotting

Some weather and atmospheric conditions can create a chemical fallout. Airborne pollutants can fall upon and attack painted surfaces on the vehicle. This damage can take two forms: blotchy, ring-shaped discolorations, and small, irregular dark spots etched into the paint surface.

Although no defect in the paint job causes this, GM will repair, at no charge to the owner, the surfaces of new vehicles damaged by this fallout condition within 12 months or 12,000 miles (20 000 km) of purchase, whichever occurs first.

Downloaded from www.Manualslib.com manuals search engine

Vehicle Care/Appearance Materials

See your GM dealer for more information on purchasing the following products.

Description	Usage
Polishing Cloth Wax-Treated	Interior and exterior polishing cloth.
Tar and Road Oil Remover	Removes tar, road oil, and asphalt.
Chrome Cleaner and Polish	Use on chrome or stainless steel.
White Sidewall Tire Cleaner	Removes soil and black marks from whitewalls.
Vinyl Cleaner	Cleans vinyl tops, upholstery, and convertible tops.
Glass Cleaner	Removes dirt, grime, smoke and fingerprints.
Chrome and Wire Wheel Cleaner	Removes dirt and grime from chrome wheels and wire wheel covers.
Finish Enhancer	Removes dust, fingerprints, and surface contaminants. Spray on and wipe off.
Swirl Remover Polish	Removes swirl marks, fine scratches, and other light surface contamination.
Cleaner Wax	Removes light scratches and protects finish.
Foaming Tire Shine Low Gloss	Cleans, shines, and protects in one step. No wiping necessary.
Wash Wax Concentrate	Medium foaming shampoo. Cleans and lightly waxes. Biodegradable and phosphate free.
Spot Lifter	Quickly removes spots and stains from carpets, vinyl, and cloth upholstery.
Odor Eliminator	Odorless spray odor eliminator used on fabrics, vinyl, leather and carpet.
See your General Motors parts department for these products. See *Recommended Fluids and Lubricants on page 6-12*.	

Downloaded from www.Manualslib.com manuals search engine

Vehicle Identification

Vehicle Identification Number (VIN)

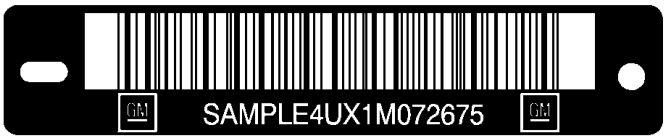

This is the legal identifier for your vehicle. It appears on a plate in the front corner of the instrument panel, on the driver's side. You can see it if you look through the windshield from outside your vehicle. The VIN also appears on the Vehicle Certification and Service Parts labels and the certificates of title and registration.

Engine Identification

The 8th character in your VIN is the engine code. This code will help you identify your engine, specifications and replacement parts.

Service Parts Identification Label

You will find this label on the inside of the glove box. It is very helpful if you ever need to order parts. On this label, you will find the following:

- VIN
- Model designation
- Paint information
- Production options and special equipment

Be sure that this label is not removed from the vehicle.

Downloaded from www.Manualslib.com manuals search engine

Electrical System

Add-On Electrical Equipment

Notice: **Don't add anything electrical to your vehicle unless you check with your dealer first. Some electrical equipment can damage your vehicle and the damage wouldn't be covered by your warranty. Some add-on electrical equipment can keep other components from working as they should.**

Your vehicle has an airbag system. Before attempting to add anything electrical to your vehicle, see *Servicing Your Airbag-Equipped Vehicle on page 1-91*.

Headlamp Wiring

The headlamp wiring is protected by an internal circuit breaker in the instrument panel fuse panel. An electrical overload will cause the lamps to go on and off, or in some cases to remain off. If this happens, have your headlamp wiring checked right away.

Windshield Wiper Fuses

The windshield wiper motor is protected by an internal circuit breaker and a fuse. If the motor overheats due to heavy snow, etc., the wiper will stop until the motor cools. If the overload is caused by some electrical problem, be sure to get it fixed.

Power Windows and Other Power Options

Circuit breakers in the instrument panel fuse panel protect the power windows and other power accessories. When the current load is too heavy, the circuit breaker opens and closes, protecting the circuit until the problem is fixed.

Downloaded from www.Manualslib.com manuals search engine

Fuses and Circuit Breakers

The wiring circuits in your vehicle are protected from short circuits by a combination of fuses, circuit breakers, and fusible thermal links.

Look at the silver-colored band inside the fuse. If the band is broken or melted, replace the fuse. Be sure you replace a bad fuse with a new one of the identical size and rating.

If you ever have a problem on the road and do not have a spare fuse, you can borrow one that has the same amperage or use one of the spare fuses in the underhood fuse block. Just pick some feature of your vehicle that you can get along without – like the radio or cigarette lighter – and use its fuse, if it is the right amperage. Replace it as soon as you can.

There are two fuse blocks in your vehicle, the instrument panel fuse block and the underhood fuse block.

Instrument Panel Fuse Block

The instrument panel fuse block is located to the right of the glove box on the end of the instrument panel.

Pull the door open to access the instrument panel fuse block.

Downloaded from www.Manualslib.com manuals search engine

HEADLAMP	SWC BACKLIGHT	RH T/LP	LH T/LP		
	PCM/PASS KEY/ CLUSTER	RR FOG LP	RR DEFOG/ HTD MIRROR	ELC/TRAILER	
PWR SLD DR	PWR MIRROR	CIGAR/DIC/ APO FRT	ON STAR	CTSY LAMP	RAP RELAY
	CRUISE	T/SIG	SIR	IGN 1	
PWR WDO		PWR QTR VENT	HVAC BLOWER	RR HVAC TEMP CONT	HVAC/DIC/DRL HEATED SEAT
	PCM/CRANK	FRT/WPR/WSHR	MALL CLUSTER	RR WPR/WSHR	BCM PRGRM
PWR/HEATED SEAT PSD	PASS KEY	HAZARD	STOP LAMP	LH HEADLP LOW	RH HEAD LP LOW
	PWR LOCK	RR PWR SCKT	CLUSTER BATT	LH HEADLP HIGH	RH HEAD LP HIGH
FRT HVAC HI BLWR	HTD MIRROR	DRL	ENHANCED EVAP/ AWD		PCM/ABS

Fuse	Usage
SWC BACKLIGHT	Steering Wheel Radio Control Switches (Illumination)
PCM/PASS KEY/CLUSTER	Instrument Cluster to PRNDL Indicators
PWR MIRROR	Power Remote Control Mirror Switch
CRUISE	Cruise Control Module, Switch and Release Switch
Blank	Not Used
PCM/CRANK	Powertrain Control Module (PCM), Ignition Crank
PASS KEY	PASS-Key® III System
PWR LOCK	Power Door Locks
HTD MIRROR	Heated Mirrors
RH T/LP	Not Used
RR FOG LP	Not Used
CIGAR/DIC/ APO FRT	Cigarette Lighter, DIC, Front Auxiliary Power Outlets, Data Link
T/SIG	Turn Signal Switch
PWR QTR VENT	Interior Lamp and Multifunction Switch (Power Vent Switch), Auto Level
FRT/WPR/ WSHR	Windshield Wiper/Washer Motor and Switch
HAZARD	Hazard Switch
RR PWR SCKT	Rear Electric Accessory Plug Housing

Downloaded from www.Manualslib.com manuals search engine

Fuse	Usage
DRL	Daytime Running Lamp Control Module
LH T/LP	Not Used
RR DEFOG/ HTD MIRROR	Rear Window Defogger Relay, Heated Mirrors
ON STAR	OnStar®
SIR	Inflatable Restraint Control Module
HVAC BLOWER	Heater-A/C Control
MALL CLUSTER	Instrument Cluster, Body Control Module, Electronic Level Control (ELC) Sensor and Relay, Theft, Door Ajar
STOP LAMP	Stoplamp Switch
CLUSTER BATT	Module/Electronic Brake Control Module/Electronic Brake Traction Control Module (EBCM/EBTCM)
ENHANCED EVAP/AWD	Evaporative Emissions (EVAP) Canister Vent Solenoid Valve, All-Wheel Drive (AWD)
Blank	Not Used
ELC/TRAILER	ELC Air Compressor and ELC Height Sensor, Trailer Harness
CTSY LAMP	Courtesy Lamp

Fuse	Usage
IGN 1	BCM, Electronic Brake Control Indicator Lamp Driver Module, Instrument Panel Cluster, Rear Side Door Actuator Control Module, Rear Windows, Rear Parking Aid
RR HVAC TEMP CONT	Rear HVAC-A/C Control
RR WPR/ WSHR	Rear Window Wiper Motor, Rear Window Wiper/Washer and Multifunction Switch (Rear Window Wiper/Washer Switch)
LH HEADLP LOW	Not Used
LH HEADLP HIGH	Not Used
Blank	Not Used
Blank	Not Used
Blank	Not Used
RAP RELAY	Retained Accessory Power (RAP) Relay
Blank	Not Used
HVAC/DIC/ DRL/ HEATED SEAT	Air Inlet Actuator, DIC Display, DRL Control Module, Heater-A/C Control, Temperature Door Actuator (Front) and Rear Window Defogger Relay

Downloaded from www.Manualslib.com manuals search engine

Fuse	Usage
BCM PRGRAM	BCM Programming
RH HEAD LP LOW	Not Used
RH HEAD LP HIGH	Not Used
PCM/ABS	IGN MAIN Relay and PCM, Electronic Brake Control Module

Circuit Breaker	Usage
HEADLAMP	Daytime Running Lamps (DRL) Control Module, Headlamp and Instrument Panel Dimmer Switch
PWR SLD DR	Power Sliding Door
PWR WDO	Front Power Windows
PWR/HEATED SEAT PSD	Six-Way Power Seats and Rear Side Door Actuator Motor
FRT HVAC HI BLWR	Blower Motor Hi Speed Relay Module

Underhood Fuse Block

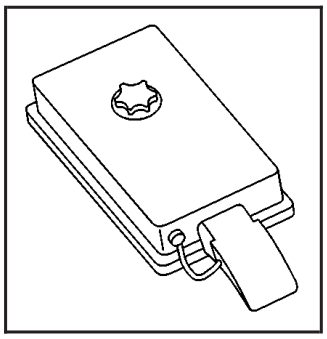

This fuse block is located in the engine compartment, in front of the windshield washer fluid reservoir. See *Engine Compartment Overview on page 5-12* for more information on location.

To remove the cover, turn the knob counterclockwise and lift up.

When finished, to put the cover back on, turn the knob clockwise to tighten it. Make sure that the remote positive (+) terminal cover is on correctly.

Downloaded from www.Manualslib.com manuals search engine

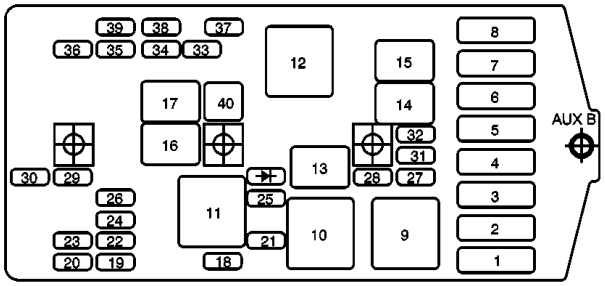

Fuse	Usage
1	Coolant Fans
2	Not Used
3	Circuit Breakers: Front Comfort Controls Hi Blower, and Headlamp Fuses (Instrument Panel): Hazard and Stoplamp, PASS-Key®
4	Circuit Breaker: Power Seat and Power Sliding Door. Fuses (Instrument Panel): Electronic Level Control and Rear Defogger, Trailer, Fog Lamps
5	Ignition Switch to Fuses (Instrument Panel): ABS/TCS Ignition, Cruise, DRL, Electronic PRNDL, Ignition 1, PSD, Air Bag, Turn Signal and Powertrain Control Module [IGN MAIN Relay (Underhood Fuse Block: A/C Clutch, Electronic Ignition, Ignition 1-U/H, INJ, TCC)]

Fuse	Usage
6	Coolant Fans
7	Fuses (Instrument Panel): ABS Module Battery, Cigarette Lighter, Courtesy Lamps, Front Power Socket, Power Locks, Power Mirrors and Right Rear Power Socket, OnStar, RAP
8	Ignition Switch to Fuses (I/P): Body Control Module Program, Front Comfort Controls Low/Medium Blower, Front Wiper/Washer, HVAC/DRL, MALL/Radio/DIC, Power Quarter Vent, Rear HVAC, Rear Wiper/Washer. SWC Accessory and Power Window Circuit Breaker, RAP
18	Fuel Injectors 1–6
19	Not Used
20	Not Used
21	Evaporative Emissions (EVAP) Canister Purge Valve, Heated Oxygen Sensors 1 and 2, Mass Air Flow (MAF) Sensor
22	Not Used
23	Not Used
24	Not Used
25	Ignition Control Module (ICM)
26	Not Used
27	Transaxle Range Switch to Back-up Lamps

Downloaded from www.Manualslib.com manuals search engine

Fuse	Usage
28	A/C Clutch Relay to A/C Compressor Clutch Oil
29	Driver Information Display, Heater A/C Control, Radio, Rear (LH and RH) Side Door Actuator Control Motor, Remote Control Door Lock Receiver (RCDLR), Security Indicator Lamp and Theft-Deterrent Shock Sensor
30	Generator
31	Automatic Transaxle (Torque Converter Clutch Solenoids) Stoplamp Switch to Powertrain Control Module
32	Fuel Pump Relay
33	Powertrain Control Module
34	Not Used
35	Fog Lamp Relay
36	Horn Relay
37	Daytime Running Lamps (DRL) Control Module, Headlamps and Instrument Panel Dimmer Switch Theft-Deterrent Relay to Headlamps

Fuse	Usage
38	Not Used
39	AIR
40	Mini Fuse Puller
	Air Conditioning Clutch Diode

Relay	Usage
9	Right Fan 1, Left Fan 2
10	Left Fan 2
11	Fuses: A/C Clutch, Ignition 1-U/H, Electronic Ignition, TCC, Injectors
12	Right Fan 1, Left Fan 2
13	A/C Clutch
14	Fuel Pump
15	Not Used
16	Horn
17	Left Fog Lamp, Right Fog Lamp, Fog Lamp Indicator

Downloaded from www.Manualslib.com manuals search engine

Capacities and Specifications

The following approximate capacities are given in English and metric measurements. See *Recommended Fluids and Lubricants on page 6-12* for more information.

Application	Capacities	
	English	Metric
Air Conditioning Refrigerant R134a		
Front A/C	1.7 lbs	0.8 kg
Front and Rear A/C	2.2 lbs	1.0 kg
Automatic Transaxle	7.4 quarts	7.0 L
Cooling System		
With A/C	9.6 quarts	9.1 L
With Rear Climate Control	11.9 quarts	11.3 L
Engine Oil with Filter	4.0 quarts	3.8 L
Fuel Capacity	25.1 gallons	95.0 L
Wheel Nut Torque	100 ft lb	140 N•m
All capacities are approximate. When adding, be sure to fill to the approximate level, as recommended in this manual. Recheck fluid level after filling.		

Engine Specifications

Engine	VIN Code	Transaxle	Spark Plug Gap
V6	E	Automatic	0.060 inches (1.52 mm)

Downloaded from www.Manualslib.com manuals search engine

NOTES

Downloaded from www.Manualslib.com manuals search engine

Section 6 Maintenance Schedule

Maintenance Schedule 6-2
Introduction 6-2
Maintenance Requirements 6-2
Your Vehicle and the Environment 6-2
Using Your Maintenance Schedule 6-2
Scheduled Maintenance 6-4
Additional Required Services 6-6
Maintenance Footnotes 6-7
Owner Checks and Services 6-9
At Each Fuel Fill 6-9
At Least Once a Month 6-9
At Least Once a Year 6-10
Recommended Fluids and Lubricants 6-12
Normal Maintenance Replacement Parts 6-14
Maintenance Record 6-15

Downloaded from www.Manualslib.com manuals search engine

Maintenance Schedule

Introduction

Important: Keep engine oil at the proper level and change as recommended.

Have you purchased the GM Protection Plan? The Plan supplements your new vehicle warranties. See your Warranty and Owner Assistance booklet or your dealer for details.

Maintenance Requirements

Notice: **Maintenance intervals, checks, inspections, replacement parts and recommended fluids and lubricants as prescribed in this manual are necessary to keep your vehicle in good working condition. Any damage caused by failure to follow scheduled maintenance may not be covered by warranty.**

Your Vehicle and the Environment

Proper vehicle maintenance not only helps to keep your vehicle in good working condition, but also helps the environment. All recommended maintenance is important. Improper vehicle maintenance can even affect the quality of the air we breathe. Improper fluid levels or the wrong tire inflation can increase the level of emissions from your vehicle. To help protect our environment, and to keep your vehicle in good condition, be sure to maintain your vehicle properly.

Using Your Maintenance Schedule

We at General Motors want to help you keep your vehicle in good working condition. But we do not know exactly how you will drive it. You may drive very short distances only a few times a week. Or you may drive long distances all the time in very hot, dusty weather. You may use your vehicle in making deliveries. Or you may drive it to work, to do errands or in many other ways.

Because of all the different ways people use their vehicles, maintenance needs vary. You may need more frequent checks and replacements. So please read the following and note how you drive. If you have any questions on how to keep your vehicle in good condition, see your GM Goodwrench dealer.

Downloaded from www.Manualslib.com manuals search engine

This schedule is for vehicles that:

- carry passengers and cargo within recommended limits. You will find these limits on the tire and loading information label. See *Loading Your Vehicle on page 4-29*.
- are driven on reasonable road surfaces within legal driving limits.
- use the recommended fuel. See *Gasoline Octane on page 5-5*.

The services in *Scheduled Maintenance on page 6-4* should be performed when indicated. See *Additional Required Services on page 6-6* and *Maintenance Footnotes on page 6-7* for further information.

⚠ CAUTION:

Performing maintenance work on a vehicle can be dangerous. In trying to do some jobs, you can be seriously injured. Do your own maintenance work only if you have the required know-how and the proper tools and equipment for the job. If you have any doubt, see your GM Goodwrench dealer to have a qualified technician do the work.

Some maintenance services can be complex. So, unless you are technically qualified and have the necessary equipment, you should have your GM Goodwrench dealer do these jobs.

When you go to your GM Goodwrench dealer for your service needs, you will know that GM-trained and supported service technicians will perform the work using genuine GM parts.

If you want to get service information, see *Service Publications Ordering Information on page 7-11*.

Owner Checks and Services on page 6-9 tells you what should be checked, when to check it and what you can easily do to help keep your vehicle in good condition.

The proper replacement parts, fluids and lubricants to use are listed in *Recommended Fluids and Lubricants on page 6-12* and *Normal Maintenance Replacement Parts on page 6-14*. When your vehicle is serviced, make sure these are used. All parts should be replaced and all necessary repairs done before you or anyone else drives the vehicle. We recommend the use of genuine GM parts.

Downloaded from www.Manualslib.com manuals search engine

Scheduled Maintenance

When the change engine oil message comes on, it means that service is required for your vehicle. Have your vehicle serviced as soon as possible within the next 600 miles (1 000 km). It is possible that, if you are driving under the best conditions, the engine oil life system may not indicate that vehicle service is necessary for over a year. However, your engine oil and filter must be changed at least once a year and at this time the system must be reset. Your GM Goodwrench dealer has GM-trained service technicians who will perform this work using genuine GM parts and reset the system.

If the engine oil life system is ever reset accidentally, you must service your vehicle within 3,000 miles (5 000 km) since your last service. Remember to reset the oil life system whenever the oil is changed. See *Engine Oil Life System on page 5-16* for information on the Engine Oil Life System and resetting the system.

When the change engine oil message appears, certain services, checks and inspections are required. Required services are described in the following for "Maintenance I" and "Maintenance II." Generally, it is recommended that your first service be Maintenance I, your second service be Maintenance II and that you alternate Maintenance I and Maintenance II thereafter. However, in some cases, Maintenance II may be required more often.

Maintenance I — Use Maintenance I if the change engine oil message comes on within 10 months since vehicle was purchased or Maintenance II was performed.

Maintenance II — Use Maintenance II if the previous service performed was Maintenance I. Always use Maintenance II whenever the message comes on 10 months or more since the last service or if the message has not come on at all for one year.

Downloaded from www.Manualslib.com manuals search engine

Scheduled Maintenance

Service	Maintenance I	Maintenance II
Change engine oil and filter. See *Engine Oil on page 5-13*. Reset oil life system. See *Engine Oil Life System on page 5-16*. *An Emission Control Service.*	•	•
Lubricate chassis components. *See footnote #.*	•	•
Visually check for any leaks or damage. *See footnote (k).*	•	•
Inspect engine air cleaner filter. If necessary, replace filter. See *Engine Air Cleaner/Filter on page 5-17*. *An Emission Control Service. See footnote †.*	•	•
Rotate tires and check inflation pressures and wear. See *Tires on page 5-52*.	•	•
Inspect brake system. *See footnote (a).*	•	•
Check engine coolant and windshield washer fluid levels and add fluid as needed.	•	•
Perform any needed additional services. See “Additional Required Services” in this section.	•	•
Inspect suspension and steering components. *See footnote (b).*		•
Inspect engine cooling system. *See footnote (c).*		•
Inspect wiper blades. *See footnote (d).*		•
Inspect restraint system components. *See footnote (e).*		•
Lubricate body components. *See footnote (f).*		•
Check transaxle fluid level and add fluid as needed.		•
Replace passenger compartment air filter. *See footnote (g).*		•
Inspect throttle system. *See footnote (j).*		•

Downloaded from www.Manualslib.com manuals search engine

Additional Required Services

The following services should be performed at the first maintenance service (I or II) after the indicated miles (kilometers) shown for each item.

Additional Required Services

Service and Miles (Kilometers)	25,000 (41 500)	50,000 (83 000)	75,000 (125 000)	100,000 (166 000)	125,000 (207 500)	150,000 (240 000)
Inspect fuel system for damage or leaks.	•	•	•	•	•	•
Inspect exhaust system for loose or damaged components.	•	•	•	•	•	•
Replace engine air cleaner filter. See *Engine Air Cleaner/Filter on page 5-17*. *An Emission Control Service.*	•	•	•	•	•	•
Change automatic transaxle fluid and filter (severe service). *See footnote (h).*		•		•		•
Change automatic transaxle fluid and filter (normal service).				•		
Replace spark plugs and inspect spark plug wires. *An Emission Control Service.*				•		

Downloaded from www.Manualslib.com manuals search engine

Additional Required Services (cont'd)

Service and Miles (Kilometers)	25,000 (41 500)	50,000 (83 000)	75,000 (125 000)	100,000 (166 000)	125,000 (207 500)	150,000 (240 000)
Engine cooling system service (or every 5 years, whichever occurs first). *An Emission Control Service. See footnote (i).*						•
Inspect engine accessory drive belt. *An Emission Control Service.*						•

Maintenance Footnotes

† *The U.S. Environmental Protection Agency or the California Air Resources Board has determined that the failure to perform this maintenance item will not nullify the emission warranty or limit recall liability prior to the completion of the vehicle's useful life. We, however, urge that all recommended maintenance services be performed at the indicated intervals and the maintenance be recorded.*

Lubricate the suspension, steering linkage, transaxle shift linkage and the underbody contact points and linkage.

(a) *Visually inspect brake lines and hoses for proper hook-up, binding, leaks, cracks, chafing, etc. Inspect disc brake pads for wear and rotors for surface condition. Inspect drum brake linings for wear or cracks. Inspect other brake parts, including drums, wheel cylinders, calipers, parking brake, etc. Check parking brake adjustment.*

(b) *Visually inspect front and rear suspension and steering system for damaged, loose or missing parts, signs of wear or lack of lubrication. Inspect power steering lines and hoses for proper hook-up, binding, leaks, cracks, chafing, etc.*

(c) *Visually inspect hoses and have them replaced if they are cracked, swollen or deteriorated. Inspect all pipes, fittings and clamps; replace with genuine GM parts as needed. To help ensure proper operation, a pressure test of the cooling system and pressure cap and cleaning the outside of the radiator and air conditioning condenser is recommended at least once a year.*

Downloaded from www.Manualslib.com manuals search engine

(d) *Visually inspect wiper blades for wear or cracking. Replace blade inserts that appear worn or damaged or that streak or miss areas of the windshield.*

(e) *Make sure the safety belt reminder light and all your belts, buckles, latch plates, retractors and anchorages are working properly. If your vehicle has a built-in child restraint, make sure the harness straps, latch plates, buckle, clip, child head restraint and anchorages are working properly. Look for any other loose or damaged safety belt system parts. If you see anything that might keep a safety belt system from doing its job, have it repaired. Have any torn or frayed safety belts replaced. Also look for any opened or broken airbag coverings, and have them repaired or replaced. (The airbag system does not need regular maintenance.)*

(f) *Lubricate all key lock cylinders, hood latch assemblies, secondary latches, pivots, spring anchor and release pawl, hood and door hinges, rear folding seats, liftgate hinges, fuel door hinge, power sliding door cable and sliding door track(s). More frequent lubrication may be required when exposed to a corrosive environment. Applying silicone grease on weatherstrips with a clean cloth will make them last longer, seal better and not stick or squeak.*

(g) *If you drive regularly under dusty conditions, the filter may require replacement more often.*

(h) *Change automatic transaxle fluid and filter if the vehicle is mainly driven under one or more of these conditions:*

- *In heavy city traffic where the outside temperature regularly reaches 90°F (32°C) or higher.*
- *In hilly or mountainous terrain.*
- *When doing frequent trailer towing.*
- *Uses such as found in taxi, police or delivery service.*

(i) *Drain, flush and refill cooling system. See Engine Coolant on page 5-22* for what to use. Inspect hoses. Clean radiator, condenser, pressure cap and filler neck. Pressure test the cooling system and pressure cap.

(j) *Check system for interference or binding and for damaged or missing parts. Replace parts as needed. Replace any components that have high effort or excessive wear. Do not lubricate accelerator or cruise control cables.*

(k) *A fluid loss in any vehicle system could indicate a problem. Have the system inspected and repaired and the fluid level checked. Add fluid if needed.*

Downloaded from www.Manualslib.com manuals search engine

Owner Checks and Services

These owner checks and services should be performed at the intervals specified to help ensure the safety, dependability and emission control performance of your vehicle. Your GM Goodwrench dealer can assist you with these checks and services.

Be sure any necessary repairs are completed at once. Whenever any fluids or lubricants are added to your vehicle, make sure they are the proper ones, as shown in *Recommended Fluids and Lubricants on page 6-12*.

At Each Fuel Fill

It is important to perform these underhood checks at each fuel fill.

Engine Oil Level Check

Check the engine oil level and add the proper oil if necessary. See *Engine Oil on page 5-13* for further details.

Notice: **It is important to check your oil regularly and keep it at the proper level. Failure to keep your engine oil at the proper level can cause damage to your engine not covered by your warranty.**

Engine Coolant Level Check

Check the engine coolant level and add DEX-COOL® coolant mixture if necessary. See *Engine Coolant on page 5-22* for further details.

Windshield Washer Fluid Level Check

Check the windshield washer fluid level in the windshield washer tank and add the proper fluid if necessary.

At Least Once a Month

Tire Inflation Check

Visually inspect your tires and make sure tires are inflated to the correct pressures. Do not forget to check your spare tire. See *Tires on page 5-52* for further details. Check to make sure the spare tire is stored securely. Push, pull and then try to turn the spare tire. If it moves, tighten it. See *Changing a Flat Tire on page 5-68*.

Downloaded from www.Manualslib.com manuals search engine

At Least Once a Year

Starter Switch Check

⚠ CAUTION:

When you are doing this inspection, the vehicle could move suddenly. If the vehicle moves, you or others could be injured.

1. Before you start, be sure you have enough room around the vehicle.
2. Firmly apply both the parking brake and the regular brake. See *Parking Brake on page 2-37* if necessary.

   Do not use the accelerator pedal, and be ready to turn off the engine immediately if it starts.
3. Try to start the engine in each gear. The starter should work only in PARK (P) or NEUTRAL (N). If the starter works in any other position, contact your GM Goodwrench dealer for service.

Automatic Transaxle Shift Lock Control System Check

⚠ CAUTION:

When you are doing this inspection, the vehicle could move suddenly. If the vehicle moves, you or others could be injured.

1. Before you start, be sure you have enough room around the vehicle. It should be parked on a level surface.
2. Firmly apply the parking brake. See *Parking Brake on page 2-37* if necessary.

   Be ready to apply the regular brake immediately if the vehicle begins to move.
3. With the engine off, turn the ignition to RUN, but do not start the engine. Without applying the regular brake, try to move the shift lever out of PARK (P) with normal effort. If the shift lever moves out of PARK (P), contact your GM Goodwrench dealer for service.

Downloaded from www.Manualslib.com manuals search engine

Ignition Transaxle Lock Check

While parked, and with the parking brake set, try to turn the ignition to LOCK in each shift lever position.

- The ignition should turn to LOCK only when the shift lever is in PARK (P).
- The key should come out only in LOCK.

Contact your GM Goodwrench dealer if service is required.

Parking Brake and Automatic Transaxle Park (P) Mechanism Check

⚠ CAUTION:

When you are doing this check, your vehicle could begin to move. You or others could be injured and property could be damaged. Make sure there is room in front of your vehicle in case it begins to roll. Be ready to apply the regular brake at once should the vehicle begin to move.

Park on a fairly steep hill, with the vehicle facing downhill. Keeping your foot on the regular brake, set the parking brake.

- To check the parking brake's holding ability: With the engine running and transaxle in NEUTRAL (N), slowly remove foot pressure from the regular brake pedal. Do this until the vehicle is held by the parking brake only.
- To check the PARK (P) mechanism's holding ability: With the engine running, shift to PARK (P). Then release the parking brake followed by the regular brake.

Contact your GM Goodwrench dealer if service is required.

Underbody Flushing Service

At least every spring, use plain water to flush any corrosive materials from the underbody. Take care to clean thoroughly any areas where mud and other debris can collect.

Downloaded from www.Manualslib.com manuals search engine

Recommended Fluids and Lubricants

Fluids and lubricants identified below by name, part number or specification may be obtained from your dealer.

Usage	Fluid/Lubricant
Engine Oil	Engine oil which meets GM Standard GM6094M and displays the American Petroleum Institute Certified for Gasoline Engines starburst symbol. GM Goodwrench oil meets all the requirements for your vehicle. To determine the proper viscosity for your vehicle's engine, see *Engine Oil on page 5-13*.
Engine Coolant	50/50 mixture of clean, drinkable water and use only DEX-COOL® Coolant. See *Engine Coolant on page 5-22*.
Hydraulic Brake System	Delco Supreme 11 Brake Fluid or equivalent DOT-3 brake fluid.

Usage	Fluid/Lubricant
Windshield Washer Solvent	GM Optikleen® Washer Solvent.
Power Steering System	GM Power Steering Fluid (GM Part No. U.S. 89021184, in Canada 89021186).
Automatic Transaxle	DEXRON®-III Automatic Transmission Fluid. Look for "Approved for the H-Specification" on the label.
Key Lock Cylinders	Multi-Purpose Lubricant, Superlube (GM Part No. U.S. 12346241, in Canada 10953474.
Chassis Lubrication	Chassis Lubricant (GM Part No. U.S. 12377985, in Canada 88901242) or lubricant meeting requirements of NLGI #2, Category LB or GC-LB.
Carrier Assembly — Differential (Rear Drive Module) and Transfer Case (Power Transfer Unit)	VERSATRAK™ Fluid (GM Part No. U.S. 12378514, in Canada 88901045).

Downloaded from www.Manualslib.com manuals search engine

Usage	Fluid/Lubricant
Hood Latch Assembly, Secondary Latch, Pivots, Spring Anchor and Release Pawl	Lubriplate Lubricant Aerosol (GM Part No. U.S. 12346293, in Canada 992723) or lubricant meeting requirements of NLGI #2, Category LB or GC-LB.
Hood and Door Hinges, Rear Folding Seat, Fuel Door Hinge, Liftgate Hinges, Power Sliding Door Cable	Multi-Purpose Lubricant, Superlube (GM Part No. U.S. 12346241, in Canada 10953474).

Usage	Fluid/Lubricant
Sliding Door Track	Lubriplate Lubricant Aerosol (GM Part No. U.S. 12346293, in Canada 992723) or lubricant meeting requirements of NLGI #2, Category LB or GC-LB.
Weatherstrip Conditioning	Dielectric Silicone Grease (GM Part No. U.S. 12345579, in Canada 992887).

Downloaded from www.Manualslib.com manuals search engine

Normal Maintenance Replacement Parts

Replacement parts identified below by name, part number, or specification can be obtained from your dealer.

Part	GM Part Number	ACDelco® Part Number
Engine Air Cleaner/Filter	25099149	A1208C
Engine Oil Filter	25010792	PF47
Passenger Compartment Air Filter Kit	10322538	—
Spark Plugs	12568387	41-101
Wiper Blades (Hook Type)		
Driver's Side – 24.0 inches (60.0 cm)	10329206	—
Passenger's Side – 24.0 inches (60.0 cm)	10329207	—
Rear – 16.0 inches (40.6 cm)	10324491	—

Downloaded from www.Manualslib.com manuals search engine

Maintenance Record

After the scheduled services are performed, record the date, odometer reading, who performed the service and the type of services performed in the boxes provided. See *Maintenance Requirements on page 6-2* in this section. Any additional information from *Owner Checks and Services on page 6-9* can be added on the following record pages. Also, you should retain all maintenance receipts.

Maintenance Record

Date	Odometer Reading	Serviced By	Maintenance I or Maintenance II	Services Performed

Downloaded from www.Manualslib.com manuals search engine

Maintenance Record (cont'd)

Date	Odometer Reading	Serviced By	Maintenance I or Maintenance II	Services Performed

Downloaded from www.Manualslib.com manuals search engine

Maintenance Record (cont'd)

Date	Odometer Reading	Serviced By	Maintenance I or Maintenance II	Services Performed

Downloaded from www.Manualslib.com manuals search engine

Maintenance Record (cont'd)

Date	Odometer Reading	Serviced By	Maintenance I or Maintenance II	Services Performed

Downloaded from www.Manualslib.com manuals search engine

Section 7 Customer Assistance and Information

Customer Assistance and Information 7-2
Customer Satisfaction Procedure 7-2
Online Owner Center 7-3
Customer Assistance for Text Telephone (TTY) Users 7-4
Customer Assistance Offices 7-4
GM Mobility Program for Persons with Disabilities 7-5
Roadside Assistance Program 7-5
Courtesy Transportation 7-7
Vehicle Data Collection and Event Data Recorders 7-9
Reporting Safety Defects 7-10
Reporting Safety Defects to the United States Government 7-10
Reporting Safety Defects to the Canadian Government 7-10
Reporting Safety Defects to General Motors 7-10
Service Publications Ordering Information 7-11

Downloaded from www.Manualslib.com manuals search engine

Customer Assistance and Information

Customer Satisfaction Procedure

Your satisfaction and goodwill are important to your dealer and to Pontiac. Normally, any concerns with the sales transaction or the operation of your vehicle will be resolved by your dealer's sales or service departments. Sometimes, however, despite the best intentions of all concerned, misunderstandings can occur. If your concern has not been resolved to your satisfaction, the following steps should be taken:

STEP ONE: Discuss your concern with a member of dealership management. Normally, concerns can be quickly resolved at that level. If the matter has already been reviewed with the sales, service or parts manager, contact the owner of the dealership or the general manager.

STEP TWO: If after contacting a member of dealership management, it appears your concern cannot be resolved by the dealership without further help, contact the Pontiac Customer Assistance Center by calling 1-800-762-2737. In Canada, contact GM of Canada Customer Communication Centre in Oshawa by calling 1-800-263-3777 (English) or 1-800-263-7854 (French).

We encourage you to call the toll-free number in order to give your inquiry prompt attention. Please have the following information available to give the Customer Assistance Representative:

- Vehicle Identification Number (VIN). This is available from the vehicle registration or title, or the plate at the top left of the instrument panel and visible through the windshield.
- Dealership name and location.
- Vehicle delivery date and present mileage.

When contacting Pontiac, please remember that your concern will likely be resolved at a dealer's facility. That is why we suggest you follow Step One first if you have a concern.

STEP THREE: Both General Motors and your dealer are committed to making sure you are completely satisfied with your new vehicle. However, if you continue to remain unsatisfied after following the procedure outlined in Steps One and Two, you should file with the BBB Auto Line Program to enforce any additional rights you may have. Canadian owners refer to your Warranty and Owner Assistance Information booklet for information on the Canadian Motor Vehicle Arbitration Plan (CAMVAP).

Downloaded from www.Manualslib.com manuals search engine

The BBB Auto Line Program is an out of court program administered by the Council of Better Business Bureaus to settle automotive disputes regarding vehicle repairs or the interpretation of the New Vehicle Limited Warranty. Although you may be required to resort to this informal dispute resolution program prior to filing a court action, use of the program is free of charge and your case will generally be heard within 40 days. If you do not agree with the decision given in your case, you may reject it and proceed with any other venue for relief available to you.

You may contact the BBB Auto Line Program using the toll-free telephone number or write them at the following address:

BBB Auto Line Program
Council of Better Business Bureaus, Inc.
4200 Wilson Boulevard
Suite 800
Arlington, VA 22203-1838

Telephone: 1-800-955-5100

This program is available in all 50 states and the District of Columbia. Eligibility is limited by vehicle age, mileage and other factors. General Motors reserves the right to change eligibility limitations and/or discontinue its participation in this program.

Online Owner Center

The Owner Center is a resource for your GM ownership needs. Specific vehicle information can be found in one place.

The Online Owner Center allows you to:

- Get e-mail service reminders.
- Access information about your specific vehicle, including tips and videos and an electronic version of this owner's manual (United States only).
- Keep track of your vehicle's service history and maintenance schedule.
- Find GM dealers for service nationwide.
- Receive special promotions and privileges only available to members (United States only).

Refer to the web for updated information.

To register your vehicle, visit www.MyGMLink.com. (United States) or My GM Canada within www.gmcanada.com (Canada).

Downloaded from www.Manualslib.com manuals search engine

Customer Assistance for Text Telephone (TTY) Users

To assist customers who are deaf, hard of hearing, or speech-impaired and who use Text Telephones (TTYs), Pontiac has TTY equipment available at its Customer Assistance Center. Any TTY user can communicate with Pontiac by dialing: 1-800-833-PONT (7668). (TTY users in Canada can dial 1-800-263-3830.)

Customer Assistance Offices

Pontiac encourages customers to call the toll-free number for assistance. If a U.S. customer wishes to write to Pontiac, the letter should be addressed to Pontiac's Customer Assistance Center.

United States — Customer Assistance

Pontiac Customer Assistance Center
P.O. Box 33172
Detroit, MI 48232-5172

1-800-762-2737 or
1-800-833-7668 (For Text Telephone devices (TTYs))
Roadside Assistance: 1-800-ROADSIDE (762-3743)
Fax Number: 313-381-0022

From Puerto Rico:
1-800-496-9992 (English)
1-800-496-9993 (Spanish)
Fax Number: 313-381-0022

From U.S. Virgin Islands:
1-800-496-9994
Fax Number: 313-381-0022

Canada — Customer Assistance

General Motors of Canada Limited
Customer Communication Centre, 163-005
1908 Colonel Sam Drive
Oshawa, Ontario L1H 8P7

1-800-263-3777 (English)
1-800-263-7854 (French)
1-800-263-3830 (For Text Telephone devices (TTYs))
Roadside Assistance: 1-800-268-6800

Overseas — Customer Assistance

Please contact the local General Motors Business Unit.

Mexico, Central America and Caribbean Islands/Countries (Except Puerto Rico and U.S. Virgin Islands) — Customer Assistance

General Motors de Mexico, S. de R.L. de C.V.
Customer Assistance Center
Paseo de la Reforma # 2740
Col. Lomas de Bezares
C.P. 11910, Mexico, D.F.
01-800-508-0000
Long Distance: 011-52-53 29 0 800

Downloaded from www.Manualslib.com manuals search engine

GM Mobility Program for Persons with Disabilities

This program, available to qualified applicants, can reimburse you up to $1,000 toward eligible aftermarket driver or passenger adaptive equipment that may be required for your vehicle, such as hand controls, wheelchair/scooter lifts, etc.

This program can also provide you with free resource information, such as area driver assessment centers and mobility equipment installers. The offer is available for a limited period of time from the date of vehicle purchase/lease. For more details, or to determine your vehicle's eligibility, see your GM dealer or call the GM Mobility Assistance Center at 1-800-323-9935. Text telephone (TTY) users, call 1-800-833-9935.

GM of Canada also has a Mobility Program. Call 1-800-GM-DRIVE (463-7483) for details. All TTY users call 1-800-263-3830.

Roadside Assistance Program

As the owner of a new Pontiac vehicle, you are automatically enrolled in the Pontiac Roadside Assistance program. This value-added service is intended to provide you with peace of mind as you drive in the city or travel the open road. Contact Pontiac's Roadside Assistance toll-free at 1-800-ROADSIDE (762-3743). Roadside Assistance Representatives are available 24 hours a day, 365 days a year.

We will provide the following services during the Bumper-to-Bumper warranty period, at no expense to you:

- **Fuel Delivery:** Delivery of enough fuel ($5 maximum) for the customer to get to the nearest service station.
- **Lock-out Service (identification required):** Replacement keys or locksmith service will be covered at no charge if you are unable to gain entry into your vehicle. Delivery of the replacement key will be covered within 10 miles (16 km).
- **Emergency Tow:** Tow to the nearest dealership for warranty service or in the event of a vehicle-disabling accident. Assistance provided when the vehicle is mired in sand, mud, or snow.

Downloaded from www.Manualslib.com manuals search engine

- **Flat Tire Change:** Installation of a spare tire will be covered at no charge. The customer is responsible for the repair or replacement of the tire if not covered by a warrantable failure.
- **Jump Start:** No-start occurrences which require a battery jump start will be covered at no charge.
- **Dealer Locator Service**

In many instances, mechanical failures are covered under Pontiac's Bumper-to-Bumper warranty. However, when other services are utilized, our Roadside Assistance Representatives will explain any payment obligations you might incur.

For prompt and efficient assistance when calling, please provide the following to the Roadside Assistance Representative:

- Your name, home address, and home telephone number
- Telephone number of your location
- Location of the vehicle
- Model, year, color, and license plate number
- Mileage, Vehicle Identification Number (VIN), and delivery date of the vehicle
- Description of the problem

While we hope you never have the occasion to use our service, it is added security while traveling for you and your family. Remember, we are only a phone call away. Pontiac Roadside Assistance: 1-800-ROADSIDE (762-3743), text telephone (TTY) users, call 1-888-889-2438.

Pontiac reserves the right to limit services or reimbursement to an owner or driver when, in Pontiac's judgement, the claims become excessive in frequency or type of occurrence.

Roadside Assistance is not part of or included in the coverage provided by the New Vehicle Limited Warranty. Pontiac reserves the right to make any changes or discontinue the Roadside Assistance program at any time without notification.

Canadian Roadside Assistance

Vehicles purchased in Canada have an extensive roadside assistance program accessible from anywhere in Canada or the United States. Please refer to the Warranty and Owner Assistance Information book.

Downloaded from www.Manualslib.com manuals search engine

Courtesy Transportation

Pontiac has always exemplified quality and value in its offering of motor vehicles. To enhance your ownership experience, we and our participating dealers are proud to offer Courtesy Transportation, a customer support program for new vehicles.

The Courtesy Transportation program is offered to retail purchase/lease customers in conjunction with the Bumper-to-Bumper coverage provided by the New Vehicle Limited Warranty. Several transportation options are available when warranty repairs are required. This will reduce your inconvenience during warranty repairs.

Scheduling Service Appointments

When your vehicle requires warranty service, you should contact your dealer and request an appointment. By scheduling a service appointment and advising your service consultant of your transportation needs, your dealer can help minimize your inconvenience.

If your vehicle cannot be scheduled into the service department immediately, keep driving it until it can be scheduled for service, unless, of course, the problem is safety-related. If it is, please call your dealership, let them know this, and ask for instructions.

If the dealer requests that you simply drop the vehicle off for service, you are urged to do so as early in the work day as possible to allow for same day repair.

Transportation Options

Warranty service can generally be completed while you wait. However, if you are unable to wait Pontiac helps minimize your inconvenience by providing several transportation options. Depending on the circumstances, your dealer can offer you one of the following:

Shuttle Service

Participating dealers can provide you with shuttle service to get you to your destination with minimal interruption of your daily schedule. This includes a one way or round trip shuttle ride to a destination up to 10 miles (16 km) from the dealership.

Downloaded from www.Manualslib.com manuals search engine

Public Transportation or Fuel Reimbursement

If your vehicle requires overnight warranty repairs, reimbursement (five days maximum) may be available for the use of public transportation such as taxi or bus. In addition, should you arrange transportation through a friend or relative, reimbursement for reasonable fuel expenses (five day maximum) may be available. Claim amounts should reflect actual costs and be supported by original receipts.

Courtesy Rental Vehicle

Your dealer may arrange to provide you with a courtesy rental vehicle or reimburse you for a rental vehicle you obtained if your vehicle is kept for a warranty repair. Reimbursement will be limited to a maximum of $30 a day and must be supported by receipts. This requires that you sign and complete a rental agreement and meet state, local and rental vehicle provider requirements. Requirements vary and may include minimum age requirements, insurance coverage, credit card, etc. You are responsible for fuel usage charges and may also be responsible for taxes, levies, usage fees, excessive mileage or rental usage beyond the completion of the repair.

Generally it is not possible to provide a like-vehicle as a courtesy rental.

Additional Program Information

Courtesy Transportation is available during the Bumper-to-Bumper warranty coverage period, but it *is not* part of the New Vehicle Limited Warranty. A separate booklet entitled *Warranty and Owner Assistance Information* furnished with each new vehicle provides detailed warranty coverage information.

Courtesy Transportation is available only at participating dealers and all program options, such as shuttle service, may not be available at every dealer. Please contact your dealer for specific information about availability. All Courtesy Transportation arrangements will be administered by appropriate dealer personnel.

Canadian Vehicles: For warranty repairs during the Complete Vehicle Coverage period of the General Motors of Canada New Vehicle Limited warranty, alternative transportation may be available under the Courtesy Transportation Program. Please consult your dealer for details.

General Motors reserves the right to unilaterally modify, change or discontinue Courtesy Transportation at any time and to resolve all questions of claim eligibility pursuant to terms and conditions described herein at its sole discretion.

Downloaded from www.Manualslib.com manuals search engine

Vehicle Data Collection and Event Data Recorders

Your vehicle, like other modern motor vehicles, has a number of sophisticated computer systems that monitor and control several aspects of the vehicle's performance. Your vehicle uses on-board vehicle computers to monitor emission control components to optimize fuel economy, to monitor conditions for air bag deployment and, if so equipped, to provide anti-lock braking and to help the driver control the vehicle in difficult driving situations. Some information may be stored during regular operations to facilitate repair of detected malfunctions; other information is stored only in a crash event by computer systems, such as those commonly called event data recorders (EDR).

In a crash event, computer systems, such as the Air Bag Sensing and Diagnostic Module (SDM) in your vehicle may record information about the condition of the vehicle and how it was operated, such as data related to engine speed, brake application, throttle position, vehicle speed, safety belt usage, air bag readiness, air bag performance, and the severity of a collision. This information has been used to improve vehicle crash performance and may be used to improve crash performance of future vehicles and driving safety. Unlike the data recorders on many airplanes, these on-board systems do not record sounds, such as conversation of vehicle occupants.

To read this information, special equipment is needed and access to the vehicle or the device that stores the data is required. GM will not access information about a crash event or share it with others other than:

- with the consent of the vehicle owner or, if the vehicle is leased, with the consent of the lessee,
- in response to an official request of police or similar government office,
- as part of GM's defense of litigation through the discovery process, or
- as required by law.

In addition, once GM collects or receives data, GM may:

- use the data for GM research needs,
- make it available for research where appropriate confidentiality is to be maintained and need is shown, or
- share summary data which is not tied to a specific vehicle with non-GM organizations for research purposes.

Others, such as law enforcement, may have access to the special equipment that can read the information if they have access to the vehicle or the device that stores the data.

If your vehicle is equipped with OnStar®, please check the OnStar® subscription service agreement or manual for information on its operations and data collection.

Downloaded from www.Manualslib.com manuals search engine

Reporting Safety Defects

Reporting Safety Defects to the United States Government

If you believe that your vehicle has a defect which could cause a crash or could cause injury or death, you should immediately inform the National Highway Traffic Safety Administration (NHTSA), in addition to notifying General Motors.

If NHTSA receives similar complaints, it may open an investigation, and if it finds that a safety defect exists in a group of vehicles, it may order a recall and remedy campaign. However, NHTSA cannot become involved in individual problems between you, your dealer, or General Motors.

To contact NHTSA, you may either call the Auto Safety Hotline toll-free at 1-800-424-9393 (or 366-0123 in the Washington, D.C. area) or write to:

NHTSA, U.S. Department of Transportation
Washington, D.C. 20590

You can also obtain other information about motor vehicle safety from the hotline.

Reporting Safety Defects to the Canadian Government

If you live in Canada, and you believe that your vehicle has a safety defect, you should immediately notify Transport Canada, in addition to notifying General Motors of Canada Limited. You may write to:

Transport Canada
330 Sparks Street
Tower C
Ottawa, Ontario K1A 0N5

Reporting Safety Defects to General Motors

In addition to notifying NHTSA (or Transport Canada) in a situation like this, we certainly hope you'll notify us. Please call us at 1-800-762-2737, or write:

Pontiac Customer Assistance Center
P.O. Box 33172
Detroit, MI 48232-5172

In Canada, please call us at 1-800-263-3777 (English) or 1-800-263-7854 (French). Or, write:

General Motors of Canada Limited
Customer Communication Centre, 163-005
1908 Colonel Sam Drive
Oshawa, Ontario L1H 8P7

Downloaded from www.Manualslib.com manuals search engine

Service Publications Ordering Information

Service Manuals

Service Manuals have the diagnosis and repair information on engines, transmission, axle, suspension, brakes, electrical, steering, body, etc.

RETAIL SELL PRICE: $120.00

Transmission, Transaxle, Transfer Case Unit Repair Manual

This manual provides information on unit repair service procedures, adjustments, and specifications for GM transmissions, transaxles, and transfer cases.

RETAIL SELL PRICE: $50.00

Service Bulletins

Service Bulletins give technical service information needed to knowledgeably service General Motors cars and trucks. Each bulletin contains instructions to assist in the diagnosis and service of your vehicle.

In Canada, information pertaining to Product Service Bulletins can be obtained by contacting your General Motors dealer or by calling 1-800-GM-DRIVE (1-800-463-7483).

Downloaded from www.Manualslib.com manuals search engine

Owner's Information

Owner publications are written specifically for owners and intended to provide basic operational information about the vehicle. The owner's manual will include the Maintenance Schedule for all models.

In-Portfolio: Includes a Portfolio, Owner's Manual, and Warranty Booklet.

RETAIL SELL PRICE: $35.00

Without Portfolio: Owner's Manual only.

RETAIL SELL PRICE: $25.00

Current and Past Model Order Forms

Service Publications are available for current and past model GM vehicles. To request an order form, please specify year and model name of the vehicle.

ORDER TOLL FREE: 1-800-551-4123
Monday-Friday 8:00 AM - 6:00 PM
Eastern Time

For Credit Card Orders Only
(VISA-MasterCard-Discover), visit Helm, Inc. on the World Wide Web at: www.helminc.com

Or you can write to:

Helm, Incorporated
P. O. Box 07130
Detroit, MI 48207

Prices are subject to change without notice and without incurring obligation. Allow ample time for delivery.

Note to Canadian Customers: All listed prices are quoted in U.S. funds. Canadian residents are to make checks payable in U.S. funds.

Downloaded from www.Manualslib.com manuals search engine

A

Accessory Inflator 5-66
Accessory Power Outlets 3-25
Additives, Fuel 5-6
Add-On Electrical Equipment 5-92
Air Cleaner/Filter, Engine 5-17
Air Conditioning 3-26
Airbag
  Readiness Light 3-38
Airbag Sensing and Diagnostic Module (SDM) 7-9
Airbag System 1-81
  How Does an Airbag Restrain? 1-89
  Servicing Your Airbag-Equipped Vehicle 1-91
  What Makes an Airbag Inflate? 1-88
  What Will You See After an Airbag Inflates? 1-89
  When Should an Airbag Inflate? 1-87
  Where Are the Airbags? 1-84
Antenna, Fixed Mast 3-118
Antenna, XM™ Satellite Radio Antenna
  System 3-118
Anti-Lock Brake System (ABS) 4-6
Anti-Lock Brake, System Warning Light 3-40
Appearance Care 5-83
  Aluminum Wheels 5-88
  Care of Safety Belts and Built-in Child
    Restraint Harness 5-86
  Chemical Paint Spotting 5-89
  Child Restraint Pad 5-85
Appearance Care (cont.)
  Cleaning Exterior Lamps/Lenses 5-87
  Fabric/Carpet 5-83
  Finish Care 5-87
  Finish Damage 5-89
  Glass Surfaces 5-85
  Instrument Panel 5-85
  Interior Plastic Components 5-85
  Leather 5-85
  Sheet Metal Damage 5-89
  Tires 5-89
  Underbody Maintenance 5-89
  Vehicle Care/Appearance Materials 5-90
  Vinyl 5-85
  Washing Your Vehicle 5-86
  Weatherstrips 5-86
  Windshield, Backglass, and Wiper Blades 5-87
Arming and Disarming the Content
  Theft-Deterrent System 2-64
Audio System(s) 3-55
  Audio Steering Wheel Controls 3-115
  Care of Your Cassette Tape Player 3-116
  Care of Your CD and DVD Player 3-118
  Care of Your CDs and DVDs 3-118
  Fixed Mast Antenna 3-118
  Radio with Cassette and CD 3-80
  Radio with CD 3-56, 3-66
  Radio with Six-Disc CD 3-90
  Rear Seat Audio (RSA) 3-111, 3-113

Downloaded from www.Manualslib.com manuals search engine

Audio System(s) (cont.)
Setting the Time 3-55
Theft-Deterrent Feature 3-115
Understanding Radio Reception 3-116
XM™ Satellite Radio Antenna System 3-118
Automatic Door Locks 2-59
Automatic Transaxle
Fluid 5-19
Operation 2-33

B

Battery 5-38
Run-Down Protection 3-21
Before Leaving on a Long Trip 4-21
Bench Seat, Split 1-8
Brake
Anti-Lock Brake System (ABS) 4-6
Emergencies 4-7
Parking 2-37
System Warning Light 3-39
Brakes 5-35
Braking 4-5
Braking in Emergencies 4-7
Break-In, New Vehicle 2-30
Bucket Seats, Rear 1-16
Built-in Child Restraint 1-69
Bulb Replacement 5-44
Front Turn Signal, Sidemarker and
Parking Lamps 5-46
Halogen Bulbs 5-44
Headlamps 5-44
Replacement Bulbs 5-50
Taillamps, Turn Signal, Stoplamps and
Back-up Lamps 5-48
Buying New Tires 5-61

C

California Fuel 5-6
Canadian Owners ii
Capacities and Specifications 5-99
Captain Chairs, Rear 1-22
Carbon Monoxide 2-21, 2-40, 4-24, 4-36
Care of
Safety Belts and Built-in Child Restraint
Harness 5-86
Your Cassette Tape Player 3-116
Your CD and DVD Player 3-118
Your CDs and DVDs 3-118
Cargo Lamp 3-20
Chains, Tire 5-65
Change Engine Oil Message 3-49
Charging System Indicator Message 3-47

Downloaded from www.Manualslib.com manuals search engine

Check
Engine Light 3-41
Checking Things Under the Hood 5-10
Chemical Paint Spotting 5-89
Child Restraints
Built-In Child Restraint 1-69
Child Restraint Systems 1-56
Infants and Young Children 1-52
Lower Anchorages and Top Tethers for Children (LATCH System) 1-62
Older Children 1-50
Securing a Child Restraint Designed for the LATCH System 1-64
Securing a Child Restraint in a Rear Seat Position 1-65
Securing a Child Restraint in the Right Front Seat Position 1-67
Top Strap 1-59
Top Strap Anchor Location 1-61
Where to Put the Restraint 1-59
Cleaning
Aluminum Wheels 5-88
Child Restraint Pad 5-85
Exterior Lamps/Lenses 5-87
Fabric/Carpet 5-83
Finish Care 5-87
Glass Surfaces 5-85
Instrument Panel 5-85
Interior Plastic Components 5-85
Cleaning (cont.)
Leather 5-85
Tires 5-89
Underbody Maintenance 5-89
Vinyl 5-85
Washing Your Vehicle 5-86
Weatherstrips 5-86
Windshield, Backglass, and Wiper Blades 5-87
Climate Control System 3-26
Air Filter, Passenger Compartment 3-32
Outlet Adjustment 3-28
Rear 3-29, 3-31
Comfort Guides, Rear Safety Belt 1-47
Compact Overhead Console 2-49
Compact Spare Tire 5-82
Content Theft-Deterrent 2-26
Content Theft-Deterrent System 2-63
Content Theft-Deterrent System, Arming and Disarming 2-64
Control of a Vehicle 4-5
Convenience Center 2-54
Convenience Net 2-53
Coolant
Engine Temperature Gage 3-41
Engine Temperature Warning Message 3-47
Heater, Engine 2-32
Cooling System 5-27
Cruise Control Lever 3-12
Cupholder(s) 2-48

Downloaded from www.Manualslib.com manuals search engine

Customer Assistance Information
Courtesy Transportation 7-7
Customer Assistance for Text Telephone (TTY) Users 7-4
Customer Assistance Offices 7-4
Customer Satisfaction Procedure 7-2
GM Mobility Program for Persons with Disabilities 7-5
Reporting Safety Defects to General Motors 7-10
Reporting Safety Defects to the Canadian Government 7-10
Reporting Safety Defects to the United States Government 7-10
Roadside Assistance Program 7-5
Service Publications Ordering Information 7-11

D

Daytime Running Lamps/Automatic Headlamp System 3-16
Defensive Driving 4-2
Delayed Illumination and Exit Lighting 2-58
Delayed Lighting 3-19
Doing Your Own Service Work 5-4
Dome Lamp 3-18
Door
Ajar Warning Message 3-50
Dual Sliding Doors 2-13
Last Door Closed Locking 2-11
Door (cont.)
Locks 2-9
Power Door Locks 2-10
Power Sliding Door 2-16
Power Sliding Warning Message 3-49
Programmable Automatic Door Locks 2-12
Driver
Position, Safety Belt 1-36
Driver Information Center (DIC) 3-52
Driving
At Night 4-14
City 4-19
Defensive 4-2
Drunken 4-2
Freeway 4-20
Hill and Mountain Roads 4-22
In Rain and on Wet Roads 4-16
Rocking Your Vehicle to Get it Out 4-29
Winter 4-24
Dual Trip Odometers 3-36
DVD
Entertainment System 3-104

E

Electrical System
Add-On Equipment 5-92
Fuses and Circuit Breakers 5-93
Headlamp Wiring 5-92

Downloaded from www.Manualslib.com manuals search engine

Electrical System (cont.)
Instrument Panel Fuse Block 5-93
Power Windows and Other Power Options 5-92
Underhood Fuse Block 5-96
Windshield Wiper Fuses 5-92
Engine
Air Cleaner/Filter 5-17
Battery 5-38
Change Oil Message 3-49
Check and Service Engine Soon Light 3-41
Coolant 5-22
Coolant Heater 2-32
Coolant Temperature Gage 3-41
Coolant Temperature Warning Message 3-47
Engine Compartment Overview 5-12
Exhaust 2-40
Oil 5-13
Overheated Protection Operating Mode 5-26
Overheating 5-25
Starting 2-31
Entering Programming Mode 2-58
Entertainment System 3-104
Entry Lighting 3-18
Event Data Recorders (EDR) 7-9
Exit Lighting 3-19
Exiting Programming Mode 2-66
Extender, Safety Belt 1-49
Exterior Lamps 3-15

F

Filter
Engine Air Cleaner 5-17
Finish Damage 5-89
Fixed Mast Antenna 3-118
Flash-to-Pass 3-9
Flat Tire 5-68
Flat Tire, Changing 5-68
Flat Tire, Storing 5-80
Flip and Fold Rear Seats 1-8
Fluid
Automatic Transaxle 5-19
Power Steering 5-32
Windshield Washer 5-34
Fog Lamps 3-17
Front Reading Lamps 3-20
Front Seat Storage Net 2-51
Fuel 5-5
Additives 5-6
California Fuel 5-6
Filling a Portable Fuel Container 5-10
Filling Your Tank 5-8
Fuels in Foreign Countries 5-7
Gage 3-45
Gasoline Octane 5-5
Gasoline Specifications 5-5
Low Warning Message 3-51

Downloaded from www.Manualslib.com manuals search engine

Fuses
Fuses and Circuit Breakers 5-93
Instrument Panel Fuse Block 5-93
Underhood Fuse Block 5-96
Windshield Wiper 5-92

G

Gage
Engine Coolant Temperature 3-41
Fuel 3-45
Speedometer 3-36
Tachometer 3-37
Garage Door Opener 2-44
Gasoline
Octane 5-5
Specifications 5-5
Glove Box 2-48
GM Mobility Program for Persons
with Disabilities 7-5

H

Hatch Ajar Warning Message 3-50
Hazard Warning Flashers 3-6
Head Restraints 1-7
Headlamp Wiring 5-92
Headlamps 5-44
Bulb Replacement 5-44
Daytime Running Lamps/Automatic Headlamp
System 3-16
Flash-to-Pass 3-9
Front Turn Signal, Sidemarker and
Parking Lamps 5-46
Halogen Bulbs 5-44
High/Low Beam Changer 3-9
Heated Seats 1-5
Heater 3-26
Highbeam On Light 3-44
Highway Hypnosis 4-22
Hill and Mountain Roads 4-22
HomeLink® Transmitter 2-44
HomeLink® Transmitter, Programming 2-45
Hood
Checking Things Under 5-10
Release 5-11
Horn 3-6
How to Use This Manual ii
How to Wear Safety Belts Properly 1-35

I

Ignition Positions 2-30
Infants and Young Children, Restraints 1-52
Inflation -- Tire Pressure 5-58

Downloaded from www.Manualslib.com manuals search engine

Instrument Panel
Brightness 3-17
Cluster 3-35
Overview 3-4
Switchbank 3-21
Interior Lamp Override 3-18
Interior Lamps Control 3-17

J

Jump Starting 5-39

K

Keyless Entry System 2-4
Keys 2-3

L

Labelling, Tire Sidewall 5-53
Lamps
Battery Run-Down Protection 3-21
Cargo 3-20
Dome 3-18
Exterior 3-15
Fog 3-17
Front Reading 3-20
Interior Control 3-17
Lamps (cont.)
Interior Override 3-18
Rear Reading 3-20
Last Door Closed Locking 2-11
Last Door Locking 2-60
LATCH System
Child Restraints 1-62
Securing a Child Restraint Designed for the LATCH System 1-64
Level Control 4-35
Liftgate 2-21
Light
Airbag Readiness 3-38
Anti-Lock Brake System Warning 3-40
Brake System Warning 3-39
Highbeam On 3-44
Malfunction Indicator 3-41
Safety Belt Reminder 3-38
TCS Warning Light 3-40
Traction Control System (TCS) Warning 3-40
Lighting
Delayed 3-19
Entry 3-18
Exit 3-19
Lockout Deterrent 2-60
Lockout Protection 2-12
Locks
Automatic Door 2-59
Door 2-9
Last Door Closed Locking 2-11

Downloaded from www.Manualslib.com manuals search engine

Locks (cont.)
Lockout Protection 2-12
Power Door 2-10
Programmable Automatic Door Locks 2-12
Loss of Control 4-13
Low Fuel Warning Message 3-51
Low Oil Pressure Message 3-48
Luggage Carrier 2-52

M

Maintenance Schedule
Additional Required Services 6-6
At Each Fuel Fill 6-9
At Least Once a Month 6-9
At Least Once a Year 6-10
Introduction 6-2
Maintenance Footnotes 6-7
Maintenance Record 6-15
Maintenance Requirements 6-2
Normal Maintenance Replacement Parts 6-14
Owner Checks and Services 6-9
Recommended Fluids and Lubricants 6-12
Scheduled Maintenance 6-4
Using Your 6-2
Your Vehicle and the Environment 6-2
Malfunction Indicator Light 3-41
Manual Seats 1-3
Message
Center 3-45
Change Engine Oil 3-49
Charging System Indicator 3-47
Door Ajar Warning 3-50
Engine Coolant Temperature Warning 3-47
Low Fuel Warning 3-51
Low Oil Pressure 3-48
PASS-Key® III Security 3-51
Power Sliding Door Warning 3-49
Rear Hatch Ajar Warning 3-50
Service Traction System Warning 3-46
Traction Active 3-46
Mirrors
Manual Rearview Mirror 2-42
Outside Convex Mirror 2-42
Outside Heated Mirrors 2-43
Outside Power Mirrors 2-42
MyGMLink.com 7-3

N

New Vehicle Break-In 2-30
Normal Maintenance Replacement Parts 6-14

Downloaded from www.Manualslib.com manuals search engine

O

Odometer 3-36
Odometers, Dual Trip 3-36
Off-Road Recovery 4-11
Oil
  Engine 5-13
  Pressure Message 3-48
Older Children, Restraints 1-50
Online Owner Center 7-3
OnStar® System 2-43
Other Warning Devices 3-6
Outlet Adjustment 3-28
Outside
  Convex Mirror 2-42
  Heated Mirrors 2-43
  Power Mirrors 2-42
Overhead Console 2-49
Overhead Console Switchbank 3-22
Overheated Engine Protection
  Operating Mode 5-26
Owner Checks and Services 6-9
Owners, Canadian ii

P

Park Aid 3-22
Park (P)
  Shifting Into 2-38
Park (P) (cont.)
  Shifting Out of 2-39
Parking
  Assist 3-22
  Brake 2-37
  Over Things That Burn 2-40
Passenger Compartment Air Filter 3-32
Passing 4-12
PASS-Key® III 2-28
PASS-Key® III Operation 2-28
PASS-Key® III Security Message 3-51
Power
  Accessory Outlets 3-25
  Door Locks 2-10
  Electrical System 5-92
  Rear Quarter Windows 2-25
  Retained Accessory (RAP) 2-31
  Six-Way Seats 1-4
  Sliding Door 2-16
  Sliding Door Warning Message 3-49
  Steering Fluid 5-32
  Windows 2-24
Pretensioners, Safety Belt 1-49
Programmable Automatic Door Locks 2-12
Programming Mode
  Entering 2-58
  Exiting 2-66
Programming the HomeLink® Transmitter 2-45

Downloaded from www.Manualslib.com manuals search engine

Q

Questions and Answers About Safety Belts 1-34

R

Radiator Pressure Cap 5-24
Radios 3-55
Care of Your Cassette Tape Player 3-116
Care of Your CD and DVD Player 3-118
Care of Your CDs and DVDs 3-118
Radio with Cassette and CD 3-80
Radio with CD 3-56, 3-66
Radio with Six-Disc CD 3-90
Rear Seat Audio 3-111, 3-113
Setting the Time 3-55
Theft-Deterrent 3-115
Understanding Reception 3-116
Rear Climate Control System 3-29, 3-31
Rear Hatch Ajar Warning Message 3-50
Rear Reading Lamps 3-20
Rear Safety Belt Comfort Guides 1-47
Rear Seat Audio (RSA) 3-111, 3-113
Rear Seat Operation 1-7
Rear Seat Passengers, Safety Belts 1-44
Rear Storage Area 2-53
Rearview Mirrors 2-42
Reclining Seatbacks 1-5
Recommended Fluids and Lubricants 6-12
Recreational Vehicle Towing 4-34
Remote Driver Unlock Control 2-61
Remote Keyless Entry System 2-4
Remote Keyless Entry System, Operation 2-5
Remote Lock and Unlock Confirmation 2-62
Removing the Flat Tire and Installing the
Spare Tire 5-73
Removing the Spare Tire and Tools 5-70
Replacement Bulbs 5-50
Reporting Safety Defects
Canadian Government 7-10
General Motors 7-10
United States Government 7-10
Restraint System Check
Checking Your Restraint Systems 1-91
Replacing Restraint System Parts After
a Crash 1-92
Restraint Systems
Checking 1-91
Replacing Parts 1-92
Retained Accessory Power (RAP) 2-31
Right Front Passenger Position, Safety Belts 1-44
Roadside
Assistance Program 7-5
Rocking Your Vehicle to Get it Out 4-29
Running Your Engine While You Are Parked 2-41

Downloaded from www.Manualslib.com manuals search engine

S

Safety Belt
- Pretensioners 1-49
- Reminder Light 3-38
- Stowage, Second Row Seat 1-7

Safety Belts
- Care of Safety Belts and Built-in Child Restraint Harness 5-86
- Driver Position 1-36
- How to Wear Safety Belts Properly 1-35
- Questions and Answers About Safety Belts 1-34
- Rear Safety Belt Comfort Guides for Children and Small Adults 1-47
- Rear Seat Passengers 1-44
- Right Front Passenger Position 1-44
- Safety Belt Extender 1-49
- Safety Belt Use During Pregnancy 1-44
- Safety Belts Are for Everyone 1-30
- Shoulder Belt Height Adjuster 1-43

Safety Warnings and Symbols iii
Scheduled Maintenance 6-4
Seats
- Bucket Seats, Rear 1-16
- Captain Chairs 1-22
- Flip and Fold Feature 1-8
- Head Restraints 1-7
- Heated Seats 1-5
- Manual 1-3

Seats (cont.)
- Rear Seat Operation 1-7
- Reclining Seatbacks 1-5
- Six-Way Power Seats 1-4
- Split Bench Seats 1-8
- Stowable Seat 1-26

Second Row Safety Belt Stowage 1-7
Secondary Latch System 5-78
Securing a Child Restraint
- Designed for the LATCH System 1-64
- Rear Seat Position 1-65
- Right Front Seat Position 1-67

Security Message, PASS-Key® III 3-51
Service 5-3
- Adding Equipment to the Outside of Your Vehicle 5-5
- Doing Your Own Work 5-4
- Engine Soon Light 3-41
- Publications Ordering Information 7-11
- Traction System Warning Message 3-46

Servicing Your Airbag-Equipped Vehicle 1-91
Setting the Time 3-55
Sheet Metal Damage 5-89
Shifting Into Park (P) 2-38
Shifting Out of Park (P) 2-39
Shoulder Belt Height Adjuster 1-43
Signals, Turn and Lane-Change 3-8
Sliding Door, Power 2-16
Sliding Doors, Dual 2-13

Downloaded from www.Manualslib.com manuals search engine

Spare Tire
Installing 5-73
Removing 5-70
Storing 5-80
Specifications, Capacities 5-99
Speedometer 3-36
Split Bench Seats 1-8
Starting Your Engine 2-31
Steering 4-9
Steering Wheel Controls, Audio 3-115
Steering Wheel, Tilt Wheel 3-6
Storage Areas 2-48
Compact Overhead Console 2-49
Convenience Center 2-54
Convenience Net 2-53
Cupholder(s) 2-48
Front Seat Storage Net 2-51
Glove Box 2-48
Luggage Carrier 2-52
Overhead Console 2-49
Rear Storage Area 2-53
Stowable Seat 1-26
Stuck in Sand, Mud, Ice or Snow 4-28
Sun Visors 2-25
Switchbanks 3-21
Overhead Console 3-22
Switchbanks, Instrument Panel 3-21

T

Tachometer 3-37
Taillamps
Turn Signal, Stoplamps and Back-up Lamps 5-48
TCS Warning Light 3-40
Theft-Deterrent, Radio 3-115
Theft-Deterrent Systems 2-25
Content Theft-Deterrent 2-26
PASS-Key® III 2-28
PASS-Key® III Operation 2-28
Tilt Wheel 3-6
Tires 5-52
Aluminum Wheels, Cleaning 5-88
Buying New Tires 5-61
Chains 5-65
Changing a Flat Tire 5-68
Cleaning 5-89
Compact Spare Tire 5-82
If a Tire Goes Flat 5-68
Inflation -- Tire Pressure 5-58
Inspection and Rotation 5-59
Installing the Spare Tire 5-73
Removing the Flat Tire 5-73
Removing the Spare Tire and Tools 5-70
Secondary Latch System 5-78
Storing a Flat or Spare Tire and Tools 5-80
Tire Sidewall Labelling 5-53

Downloaded from www.Manualslib.com manuals search engine

Tires (cont.)
Tire Terminology and Definitions 5-55
Uniform Tire Quality Grading 5-62
Wheel Alignment and Tire Balance 5-63
Wheel Replacement 5-64
When It Is Time for New Tires 5-60
Top Strap 1-59
Top Strap Anchor Location 1-61
Towing
Recreational Vehicle 4-34
Towing a Trailer 4-36
Your Vehicle 4-34
Traction
Active Message 3-46
Control System (TCS) 4-8
Control System Warning Light 3-40
Service Traction System Warning Message 3-46
Transaxle
Fluid, Automatic 5-19
Transaxle Operation, Automatic 2-33
Turn and Lane-Change Signals 3-8
Turn Signal/Multifunction Lever 3-7

U

Ultrasonic Rear Parking Assist (URPA) 3-22
Understanding Radio Reception 3-116
Uniform Tire Quality Grading 5-62

V

Vehicle
Control 4-5
Damage Warnings iv
Symbols iv
Vehicle Data Collection and Event
Data Recorders 7-9
Vehicle Identification
Number (VIN) 5-91
Service Parts Identification Label 5-91
Vehicle Personalization 2-57
Arming and Disarming the Content
Theft-Deterrent System 2-64
Automatic Door Locks 2-59
Content Theft-Deterrent System 2-63
Delayed Illumination and Exit Lighting 2-58
Entering Programming Mode 2-58
Exiting Programming Mode 2-66
Last Door Locking and Lockout Deterrent 2-60
Remote Driver Unlock Control 2-61
Remote Lock and Unlock Confirmation 2-62
Ventilation Adjustment 3-28
Visors 2-25

Downloaded from www.Manualslib.com manuals search engine

W

Warning Lights, Gages and Indicators 3-34
Warnings
  Hazard Warning Flashers 3-6
  Other Warning Devices 3-6
  Safety and Symbols iii
  Vehicle Damage iv
Wheels
  Alignment and Tire Balance 5-63
  Replacement 5-64
Where to Put the Restraint 1-59
Windows 2-23
  Power 2-24
  Power Rear Quarter 2-25
Windshield
  Backglass, and Wiper Blades, Cleaning 5-87
Windshield Washer 3-10
  Fluid 5-34
Windshield Wiper
  Blade Replacement 5-50
  Fuses 5-92
  Windshield Wipers 3-9
Winter Driving 4-24

X

XM™ Satellite Radio Antenna System 3-118

Y

Your Vehicle and the Environment 6-2

Downloaded from www.Manualslib.com manuals search engine