239

Service.

AUDI A2 - Body

Construction and Function

Self-study programme 239

For internal use only.

The Audi-Space-Frame ASF® in the A2

Audi A2 development targets

Weight savings of at least 40 % with respect to a comparable steel body as a precondition for a future 3-litre vehicle.

Using the full potential of lightweight construction

Measures

This is achieved with an aluminium Space-Frame body design.

This is made possible with the use of further developed semi-finished aluminium products: cast aluminium, extruded profiles and rolled sheet metal.

SSP239_007

Economic production for the world's first large-series production of aluminium vehicles

This is achieved with a construction that allows a large degree of automation at the raw body shell production stage.

Highest standards in terms of rigidity and crash response - "best in class"

Contents

Page

The material aluminium

Historical development at Audi 4
Manufacturing 6
Properties 8
Recycling 12

The Audi-Space-Frame ASF® in the A2

Technological concept 14
Overview of ASF® - A8 and A2 16
Components 18

Bonding techniques

Overview 24
Production methods 25
Punch rivets 25
Internal high-pressure metal forming 26
Metal inert gas welding 28
Laser welding 29

OPEN SKY ROOF

Design and function 34
Assembly work 38

Occupant protection 39

Repair concept 46

Painting 52

Review of A8 aluminium technology

ASF® in the Audi A8 54
Repair concept 58

The self-study programme will provide you with information on construction and functions.

It is not intended as a workshop manual!

For maintenance and repairs please refer to the current technical literature.

New

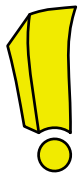

Attention Note

The material aluminium

Historical development at Audi

Vehicle concepts

1999

Audi Space Frame A2
Audi A2

1994

Audi Space Frame A8
Audi A8

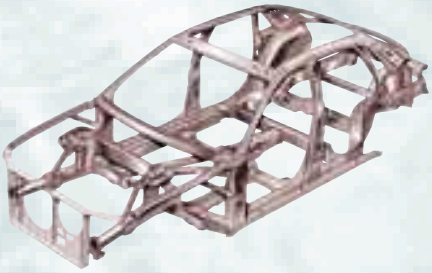

1991

Avus quattro study

1984

Early stage of the
Space-Frame technology

Audi 100 - aluminium sheet
metal vehicle

1913

Aluminium vehicle NSU 8/24
Long-distance saloon
completely made of aluminium

SSP239_008

1999

Audi Space Frame
in the Audi A2

A6 bonnet, wings and
back panel made of aluminium in
the A6 V8

1998

TT bonnet

crankcase for the
1.8 l in the A6

Door subframe
Audi A6

Crankcase for the
1.6 l in the A3/A4 Avant

1997

A6 bonnet

Light alloy wheels as
standard
on the A4/A6/Cabrio

1996

Light alloy wheels as standard on the A3
Aluminium oil pan for the V6 petrol and TDI

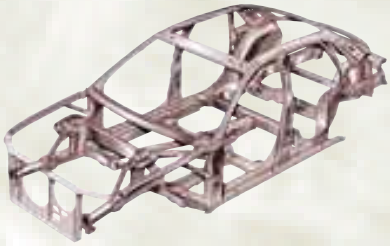

Audi Space Frame
ASF in the A8

1994

Transverse
link
Audi A8

1991

Crankcase
4.2 l V8

Door subframe
Audi 100

1990

Side impact protection
Audi 100

Crankcase
3.6 l V8

1988

Dash panel cross piece in the
V8 made of magnesium

1986

Door subframe
Audi 80

Door subframe
Audi 100

1982

Bumper cross piece
for the Audi 100
Aluminium sheet

SSP239_009

Production

The raw material for aluminium is bauxite.

- Forms as a result of the weathering of limestone and silicate rocks under appropriate climatic conditions.
- Named after the location in which it was discovered - Les Baux (southern France)

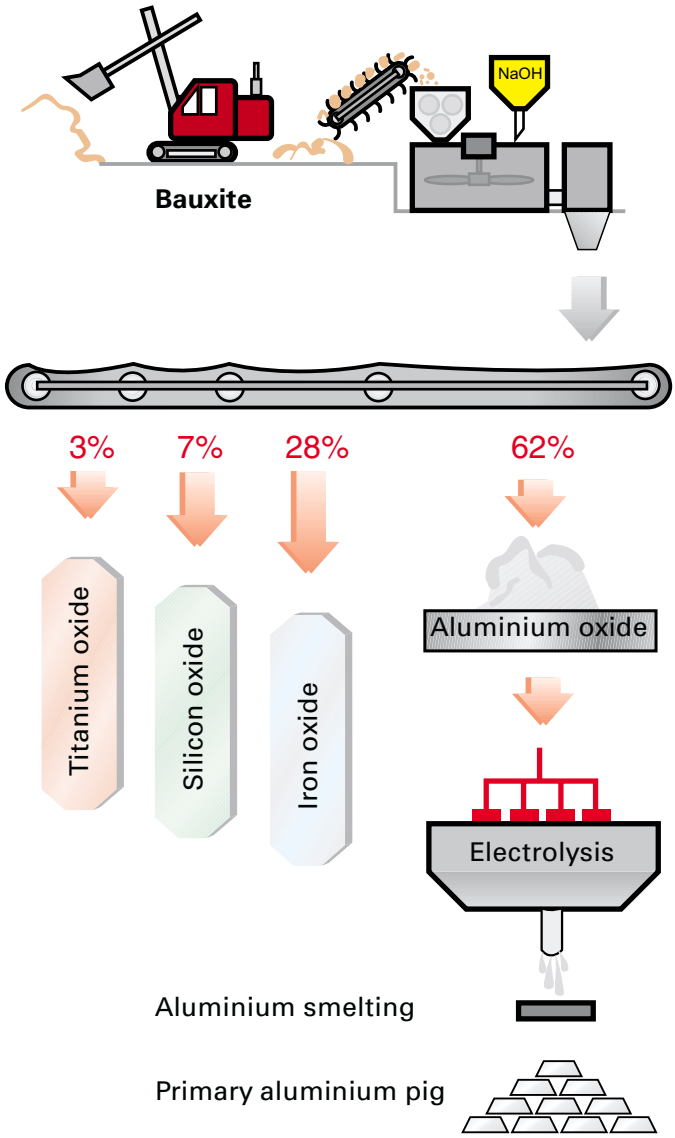

Today Bauxite is the second most frequently used metal after steel, even though it has only been possible to produce it economically for approximately a century.
The difficulty lies in the fact that it is very difficult to extract from the ore, as aluminium reacts with oxygen to form a very stable oxide, which means that it cannot be recovered (smelted) from the ore using carbon, as in the case of iron or copper.

It was not until Werner v. Siemens produced his dynamo at the end of the 19th century that it became possible to produce aluminium on an industrial scale by electrolytic methods.

Production [in millions of tons, 1980] in certain countries of production

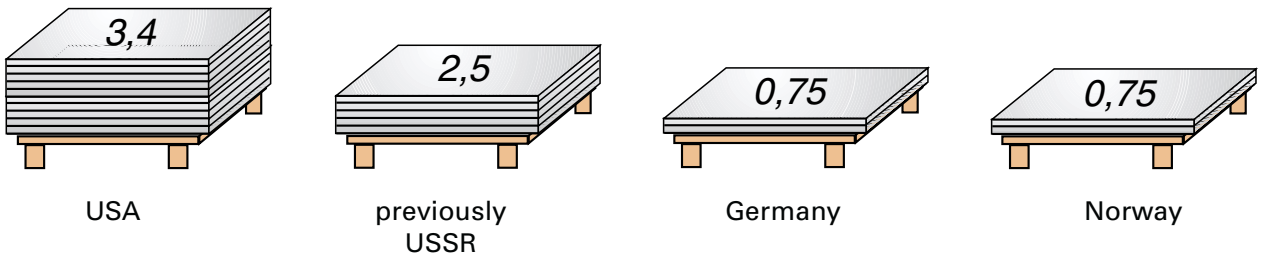

SSP239_069

Aluminium - production and recycling

Under high energy expenditure, Bauxite is processed into aluminium oxide and then via electrolysis into primary aluminium pig.

By the addition of magnesium and silicon (the key alloy components) it is then transformed into high quality aluminium alloys.

These alloys form the foundation for extruded profiles, cast joints and rolled sheet metal aluminium.

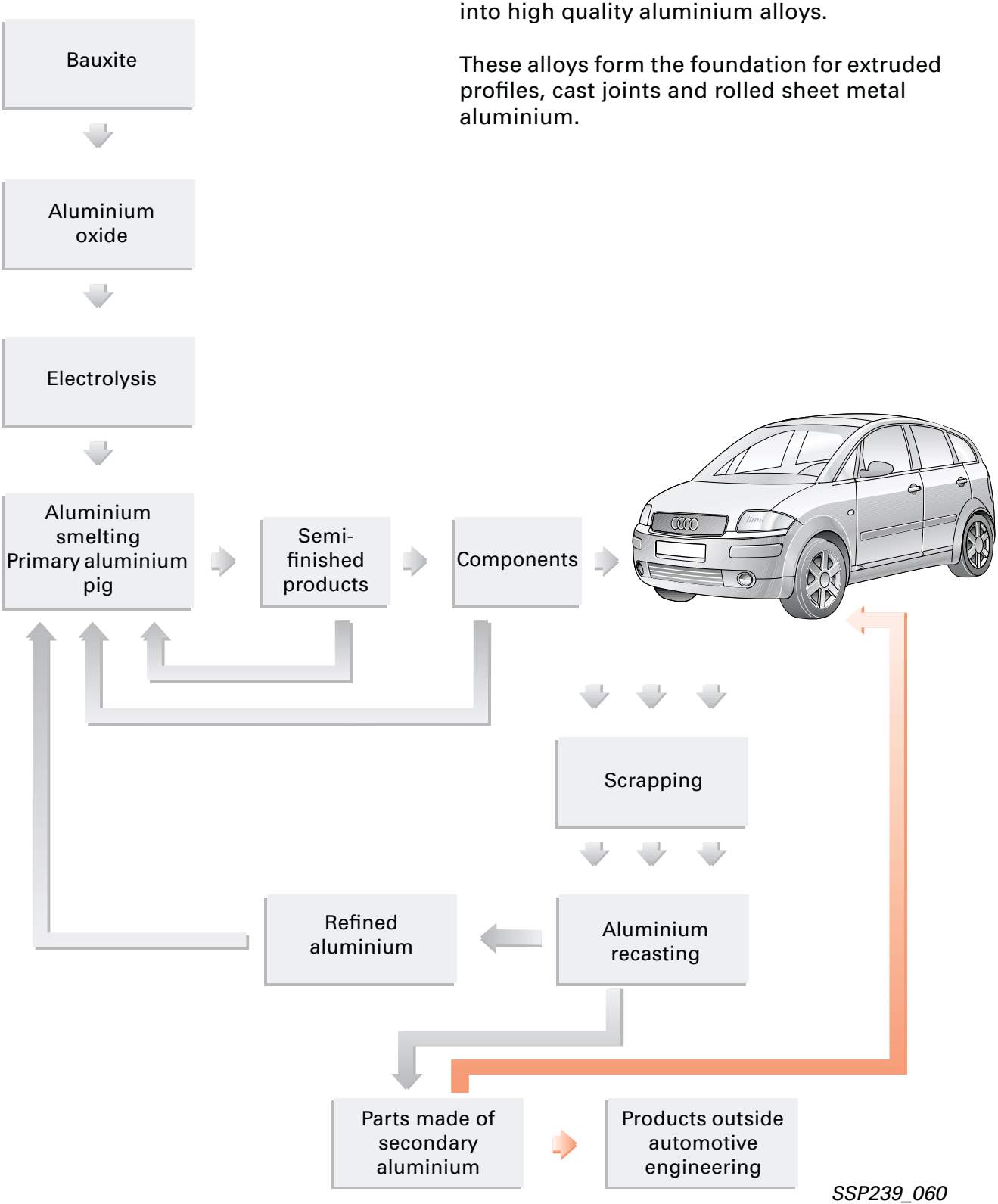

SSP239_060

Properties

Advantages of aluminium

- Aluminium has only about 1/3 of the specific weight of steel.
- It reacts with the oxygen in the air form a thin layer of oxide, which constantly regenerates and protects against further destruction of the material.
- Aluminium alloys are easy to reuse and recycle.
- The recycling of aluminium only requires 5 % of the energy expenditure for primary aluminium production.
- It can be recycled several times.
- The material is non-toxic.
- Good mechanical strength properties Strength ranging from 60 to over 500 N/mm^2
- Good resistance to atmospheric and saltwater corrosion
- Good plasticity properties
- Very well suited to MIG/TIG welding and beam welding (e.g. laser welding).

  MIG = metal inert gas welding
  TIG = tungsten inert gas welding
  Inert gas = protection gas

Monocoque steel construction

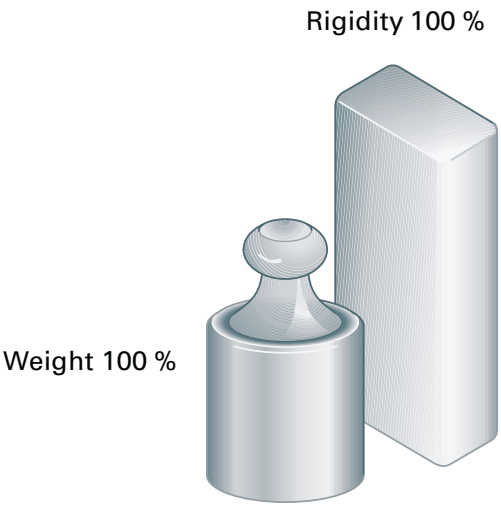

Audi-Space-Frame ASF®

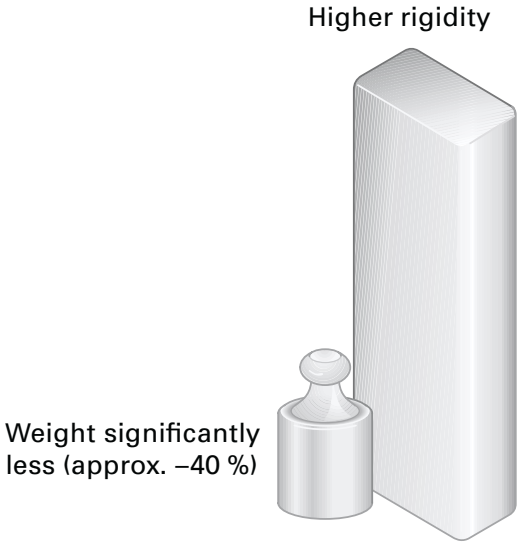

SSP239_058

Approx. 40 % less body weight for the same rigidity as a steel body.

Rigidity of an ASF® body

The higher rigidity of an aluminium body compared to a steel body is due exclusively to the larger cross-sections and corresponding sectional designs.

This forms the basis for a statically and dynamically rigid aluminium body.

New production methods for producing cast aluminium, extruded profiles and rolled sheet metal are used for the A2.

Every component of the raw body shell has been dimensioned perfectly in terms of its cross-section and weight to meet the strain that will be placed on the material.

The result are the lightest bodies in this vehicle's class, with optimised values for torsional strength, flexural strength and buckling strength.

Torsional strength

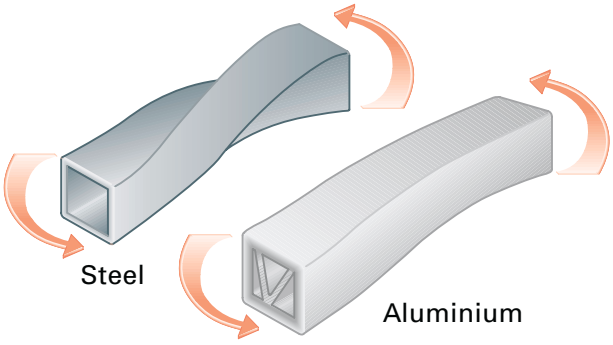

Flexural strength

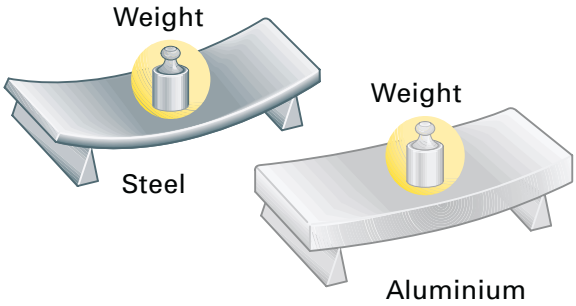

Buckling strength

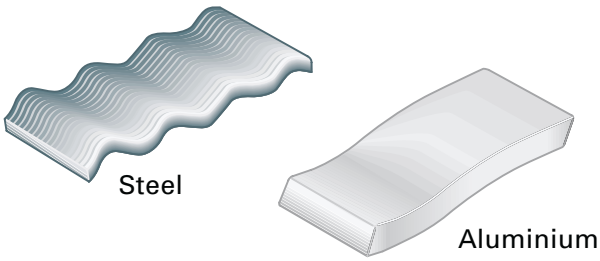

SSP239_014

The material aluminium

Electrochemical potential series

Contact corrosion occurs when different metals that lie far apart in the electrochemical potential series come into contact under the presence of an electrolyte.

The metal that is lower in the electrochemical potential series is electrolysed.

The electrolysation is more pronounced the further the metals are apart in the electrochemical potential series.

Contact corrosion on aluminium leads to rapid destruction at the contact point, particularly of thin-walled components.

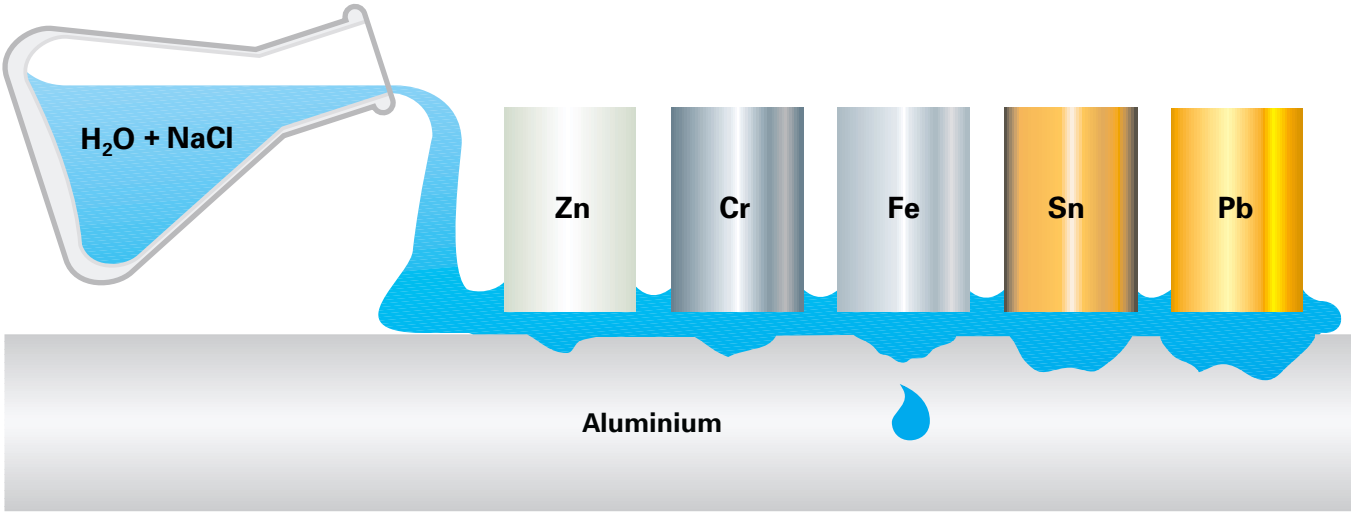

SSP239_052

Electrochemical potential series (extract)

Lead - Pb
Tin - Sn
Iron - Fe
Chromium - Cr
Zinc - Zn
Aluminium - Al

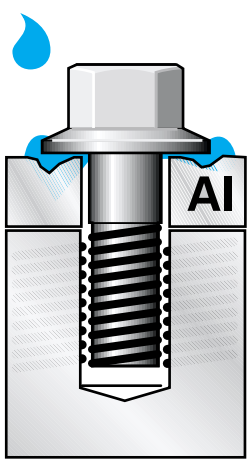

Corrosion

SSP239_011

Threaded connections on the Audi A2.

All fastening components that come into contact with aluminium are coated with Dacromet, Delta Tone or a similar coating to prevent contact corrosion.

In addition these parts are coloured with a green lubricant on an alkyd resin basis to provide a clear distinction to normal fastening components.

Surface protection

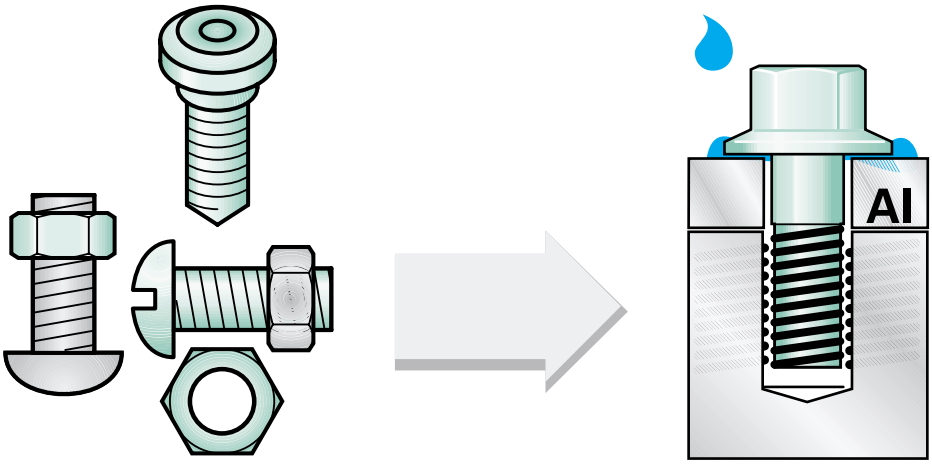

SSP239_005

Available coatings for prevention of contact corrosion

1. **coatings containing zinc and aluminium dust**
   (Delta Tone®, Dacromet®)

2. **special zinc alloy coatings**
   (Zn/Sn mechanically or ZnNi by electroplating)

3. **galvanised aluminium coatings**

4. **zinc coatings**
   (for non-ferrous metals)

5. **Duplex systems**
   (zinc + paint)

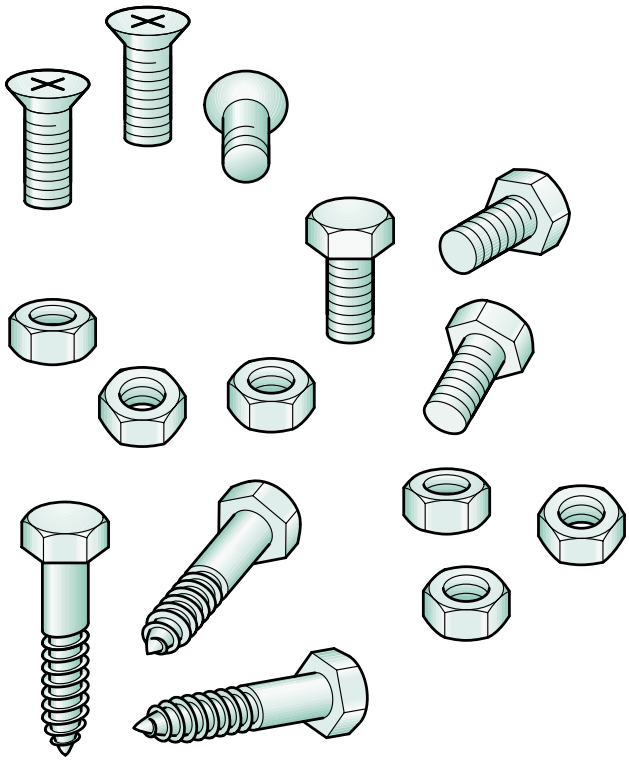

SSP239_006

Recycling

The high scrap value of aluminium makes collection and recycling economically viable. The energy expenditure involved is low. The quality and the properties of the material are retained.

The economic advantages of thorough sorting are made clear by the trade values of scrap metals.

Suitable methods for fully-automated sorting of metals according to alloy constituents are available (laser detection).

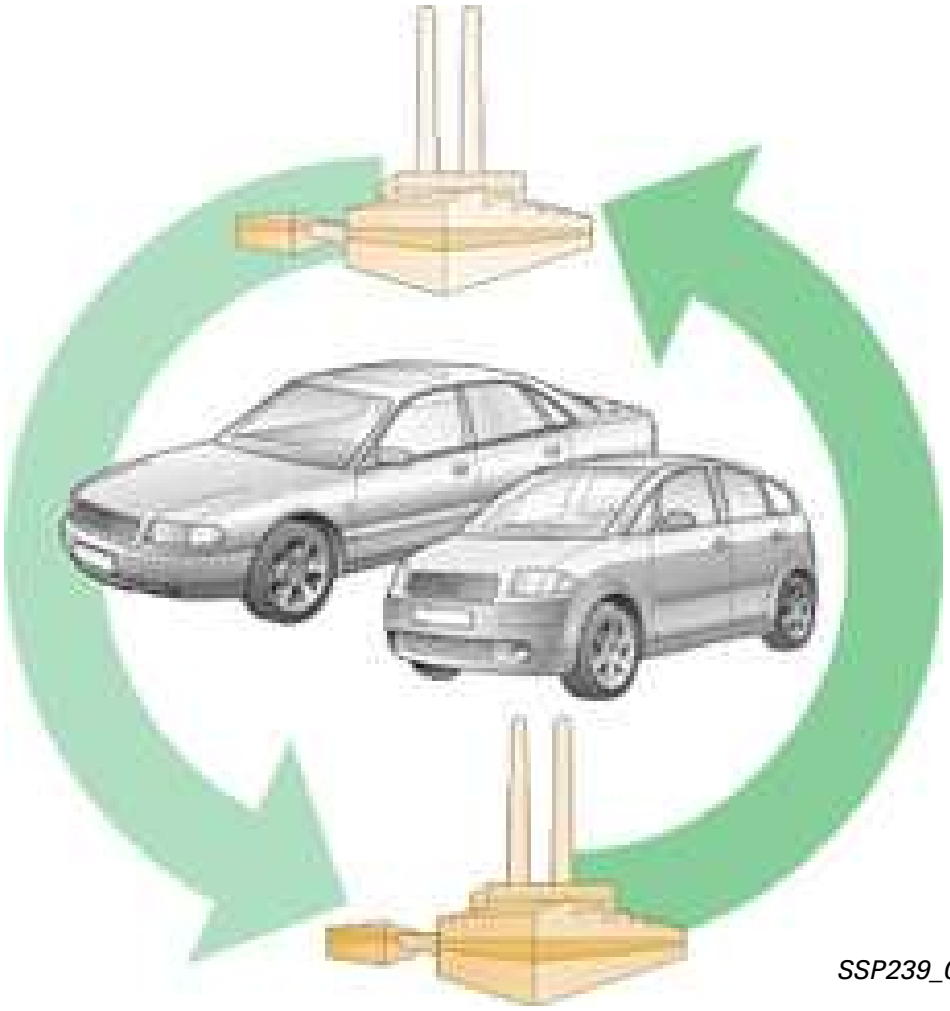

SSP239_002

Aluminium products are recycled, and do not end their life on a waste tip.

Unsorted, milled scrap aluminium is identified and sorted via laser spectroscopy technology

Energy expenditure

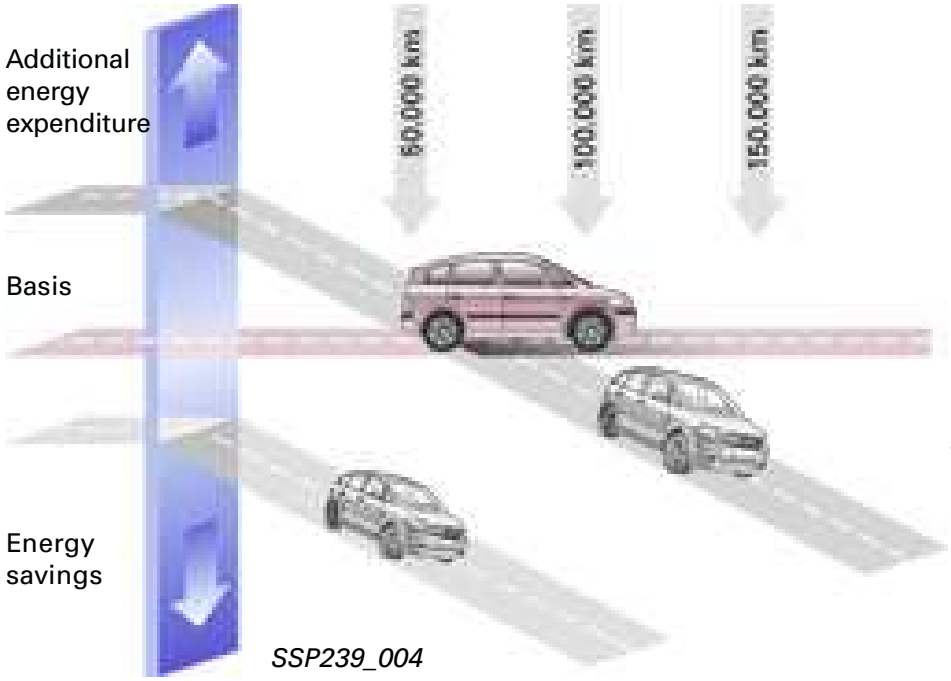

SSP239_004

Conventional steel body

The use of primary aluminium entails an initially high expenditure of energy, but this is offset after a certain driven distance by savings of other energy carriers, e.g. fuel.

In terms of aluminium recycling the Audi Space Frame ASF® is better from the start.

Energy savings

The relative energy expenditure for a new aluminium body compared to a steel body is reduced every time a scrap aluminium body is recycled.

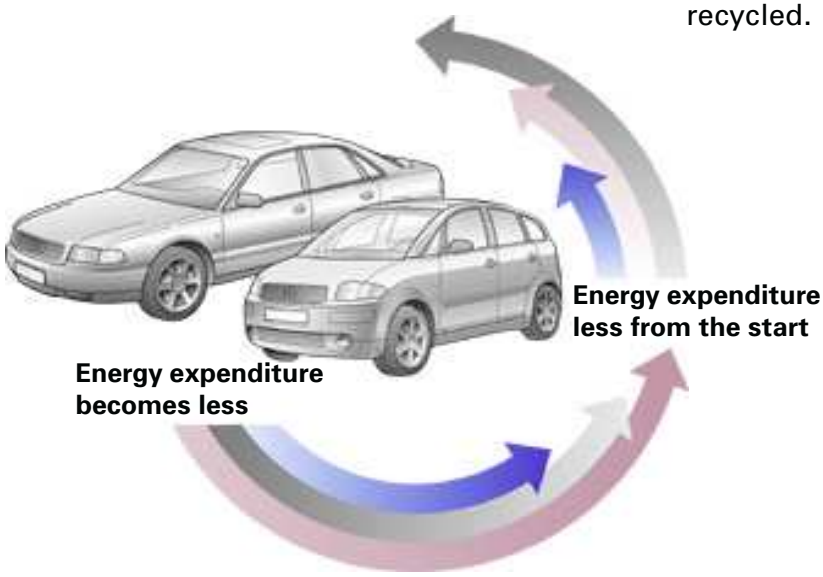

SSP239_003

Vehicle made of recycled aluminium

Steel body (conventional car)

Aluminium-intensive car Primary aluminium

Recovering aluminium from scrap only costs a fraction of the original energy expenditure.

Technological concept

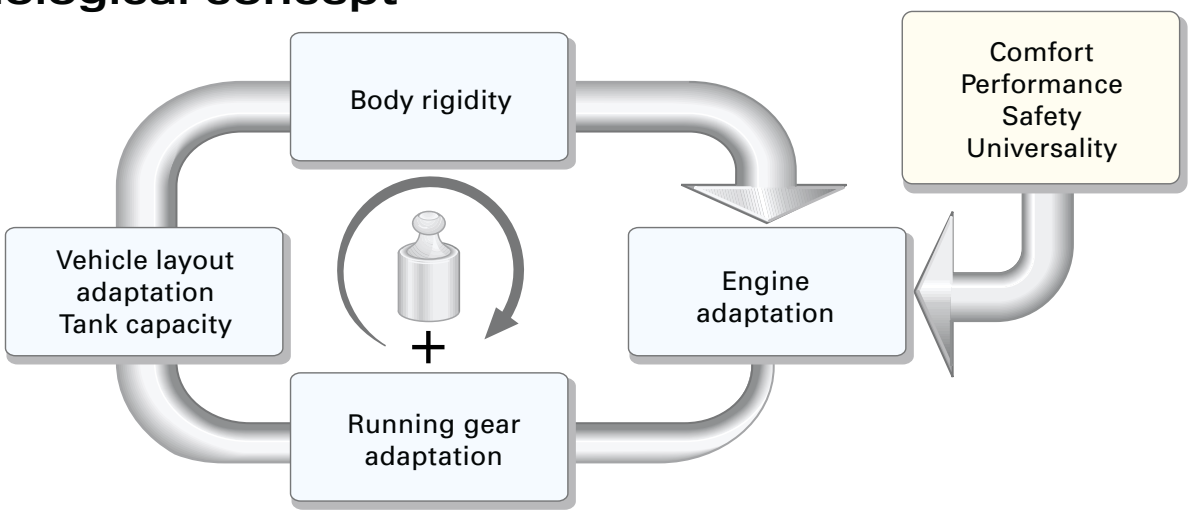

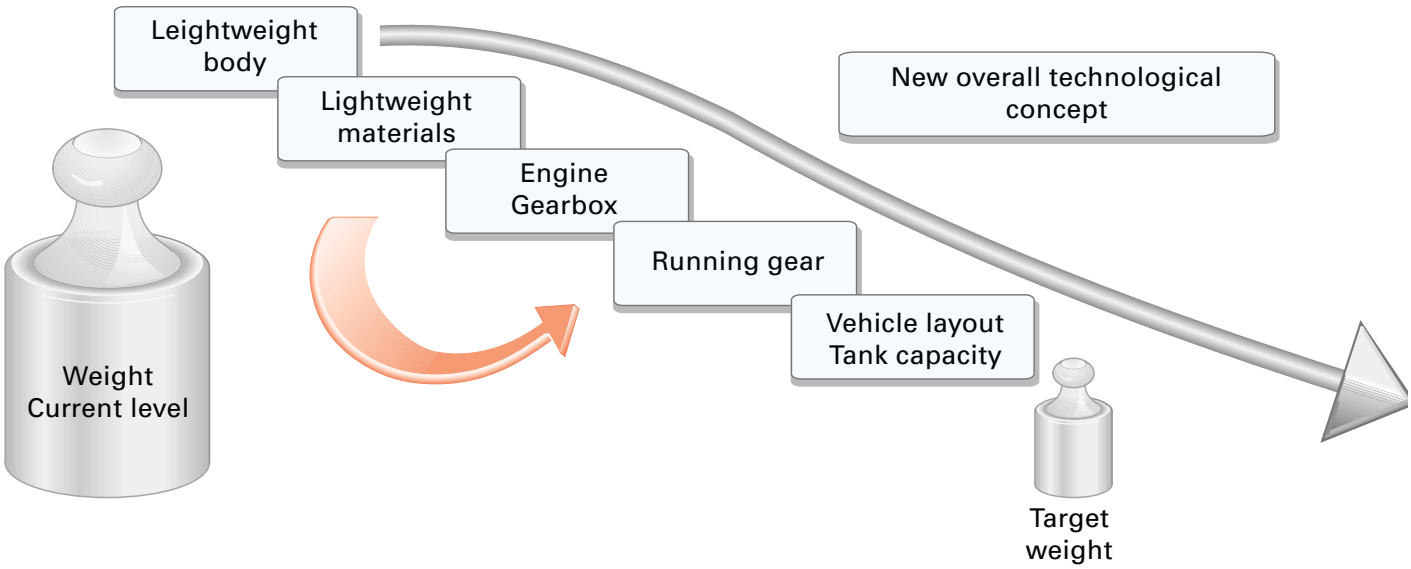

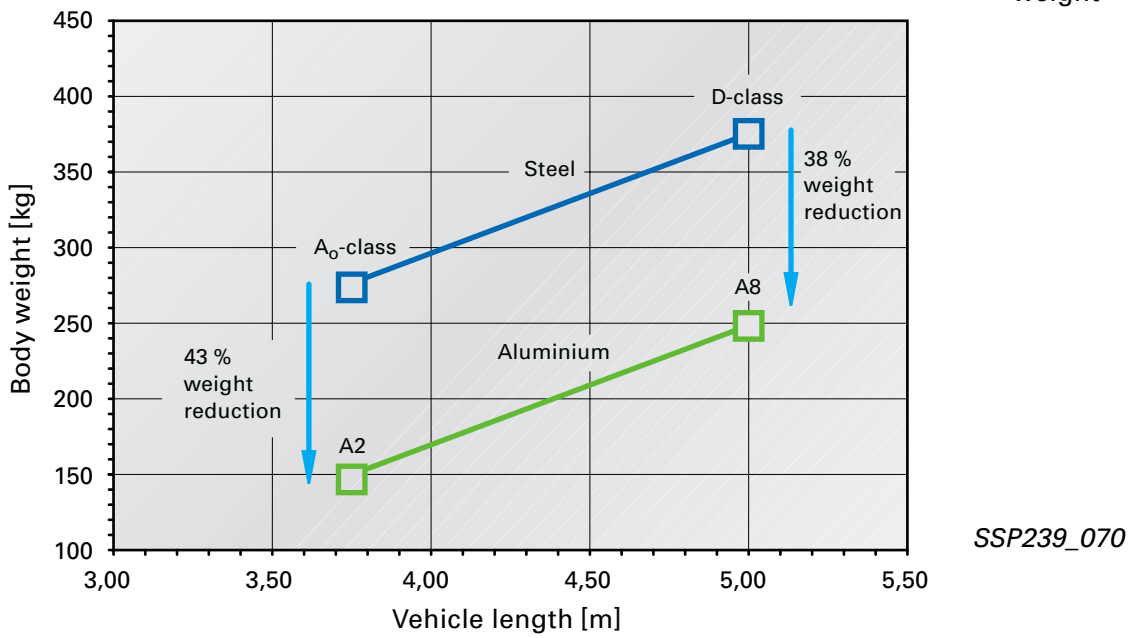

SSP239_070

Innovations of the Audi Space Frame in the A2

SSP239_096

Manufacturers face conflicting requirements during the development of a new vehicle or redevelopment of an existing one.
On the one hand, the vehicle should have a high degree of variability with the best possible equipment and the lowest possible fuel consumption.
On the other hand, the additional equipment and various adaptation measures cause an increase in weight, which counteracts low fuel consumption.
In order to solve this weight problem, a new concept of aluminium and ASF® technology has been created for the A2.
The reduction in weight on the A2 due to the new concept is very impressive, as with the A8 previously.

The main innovations of the Audi Space Frame are:

- reduction of the number of body components to approx. 230 components only
- multi-functional large cast components
- further development of aluminium technology, e.g.:
  - 30 m laser weld seams
  - roof frame aluminium profiles formed by internal high-pressure technique
  - side part pressed from one piece

Overview of ASF® - A8 and A2

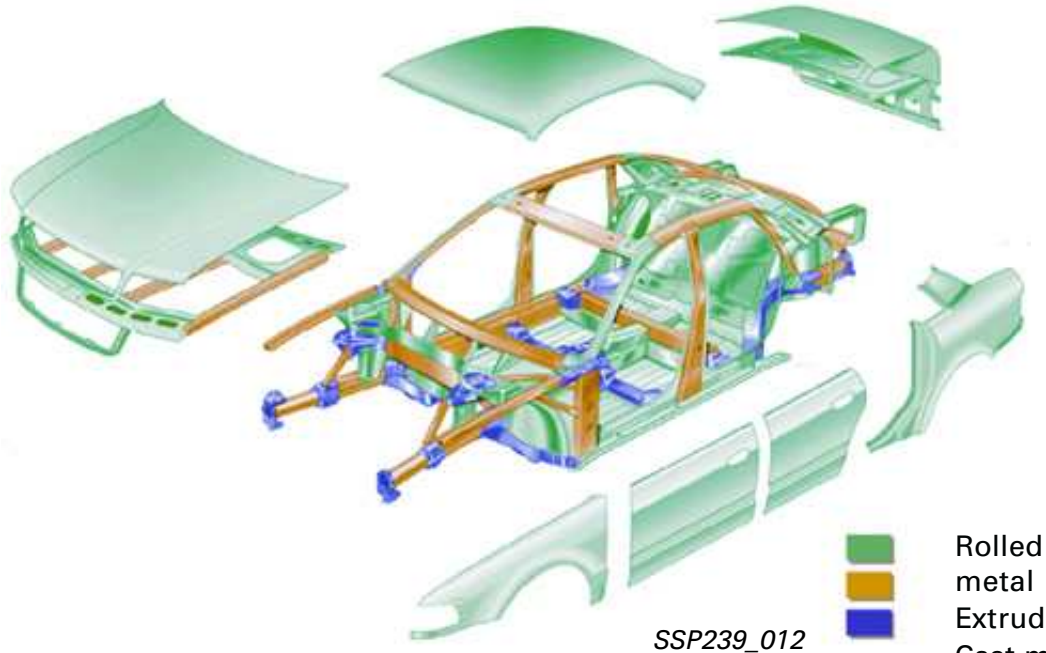

Rolled sheet metal
Extruded profiles
Cast metal

The Audi Space Frame® A8 is a compound of aluminium profiles and die-cast aluminium joints.

All of the other aluminium body parts are attached to this Audi frame construction by MIG welding, punch rivets, adhesive bonding and clinching.

Weight distribution

Rolled sheet metal parts - 55 %	=138.20 kg
Extruded profile parts - 22.7 %	= 56.50 kg
Cast parts - 21.8 %	= 54.30 kg
Overall weight of the ASF®	=249.00 kg

Number of parts

Rolled sheet metal parts - 71 %	=237 parts
Extruded profile parts - 14 %	= 49 parts
Cast parts - 15 %	= 50 parts
Total number of parts of the ASF®	=336 parts

Overview of bonding techniques

Punch rivets	= 1100 rivets
MIG welds	= 70 m
Welding spots	= 500 spots
Clinches	= 178

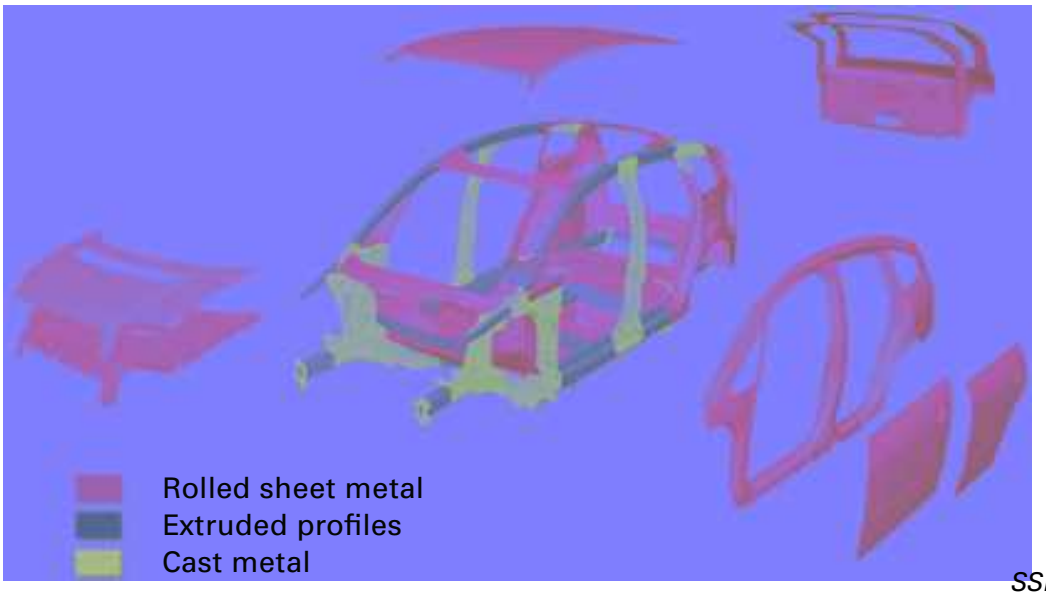

SSP239_013

The Audi Space Frame® A2 consists of a compound of aluminium extruded profiles in multi-functional vacuum die-cast parts (large cast parts).

Through continuous further development it has been possible to reduce the number of parts.

The laser welding process is new.

Weight distribution

Rolled sheet metal parts - 60.6 %	= 92.80 kg
Extruded profile parts - 17.6 %	= 27.00 kg
Cast parts - 22.1 %	= 33.20 kg
Overall weight of the ASF®	=153.00 kg

Number of parts

Rolled sheet metal parts - 81,3 %	=183 parts
Extruded profile parts - 9.8 %	= 22 parts
Cast parts - 8.9 %	= 20 parts
Total number of parts of the ASF®	=225 parts

Overview of bonding techniques

Punch rivets	= 1800 rivets
MIG welds	= 20 m
Laser welds	= 30 m

Components

Multi-functional large cast parts with function-optimised wall thickness and weight, plus optimised component structure.

As well as having very good strength properties, vacuum die-cast parts also display very good deformation characteristics, and they are predominantly used in crash-relevant areas of the structure, for example in the longitudinal members 2, the suspension strut holders and A- and B-pillars.

Designing the longitudinal member 2 as a vacuum die-cast part has various advantages over conventional manufacturing techniques:

- The wall thickness distribution and the rib structure determined in accordance with structural calculations ensure that the two half shells of the longitudinal members have a pre-defined deformation response.
- The points at which the front axle is bolted to the subshells have been constructed to deflect the deformation energy into the longitudinal members instead of the rigid subframe.
- Through integration of the gearbox and engine mounting attachments, the subframe attachment, the insert for the trolley jack and the suspension gear mounting points, these two cast half shells form a large multi-functional cast component.
- As well as weight savings this has also led to a reduction in the number of parts.

Front end

The complete front end is then formed from this longitudinal member structure by adding an additional large cast part (the suspension strut holder), the front bulkhead, the pedal cross piece and the front wheel housings.

Bolted longitudinal member

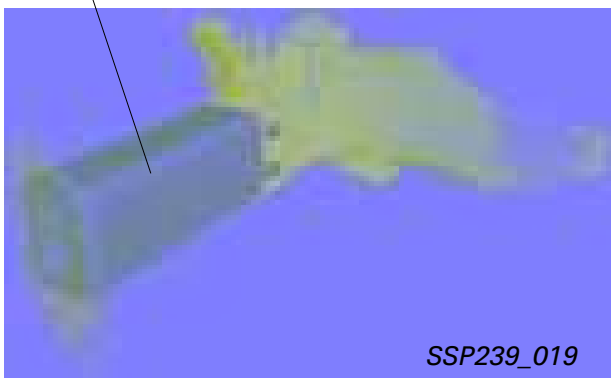

SSP239_019

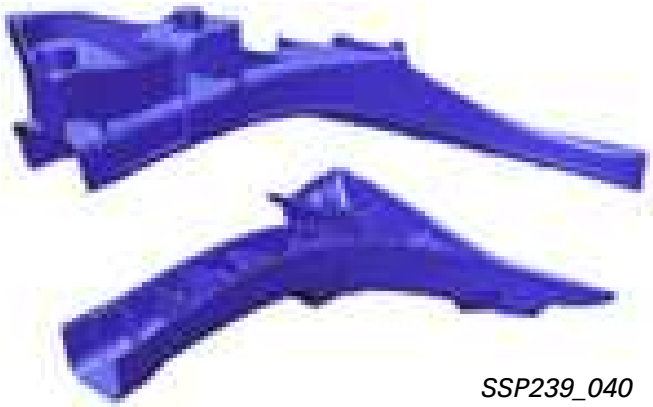

SSP239_040

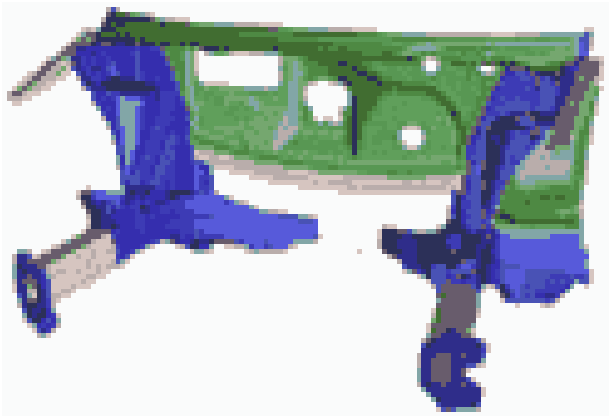

SSP239_097

Improvements to the vacuum die-cast process now mean that much larger components can be produced, such as the A- and B-pillars in the Audi A2.

Cast parts in the ASF® A8

Joint elements with tolerance compensation These parts are manufactured using the vacuum die-cast process (Vacural®).

Pore arms and easily weldable parts are a requirement for the subsequent assembly process.

These parts display good properties in terms of their crash response with regard to deformation and energy absorption.

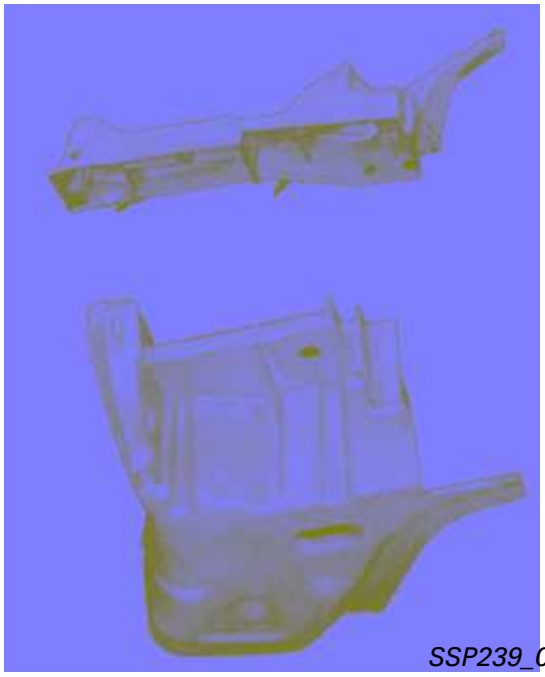

A-pillar joint elements (A8)

Cast parts in the ASF® A2

Multi-functional large cast parts with minimised wall thickness and weight, plus improved dimensional accuracy of components.

New alloy developments have meant that the casting process has been further developed, recycling has been improved and subsequent heat treatment is no longer necessary.

Together with optimised peripherals (tool technology), the dimensional accuracy of the parts has been improved.

Due to these large cast parts it has been possible to expand the opportunities available through existing joint technology.

The result is a reduced number of parts, and therefore less bonding work needs to be carried out.

Thanks to these optimised design options, the integration of multi-functionality and a reduction of the number of parts has been achieved.

A-pillar large cast parts (A2)

Attachment of the centre floor pan and the rear end

The frame of the underbody structure consists of straight extruded profiles joined together by MIG fillet welds. As a result, the cast joints that were still necessary in the Audi A8 are no longer required.

The rear end also has a relatively simple structure, consisting of longitudinal members and cross pieces, and is attached to the centre floor pan by another multi-functional large cast part.

This “longitudinal member - sill connection piece” includes the rear axle connection, the spring plate support, the insert for the trolley jack and the manufacturing mounting points.

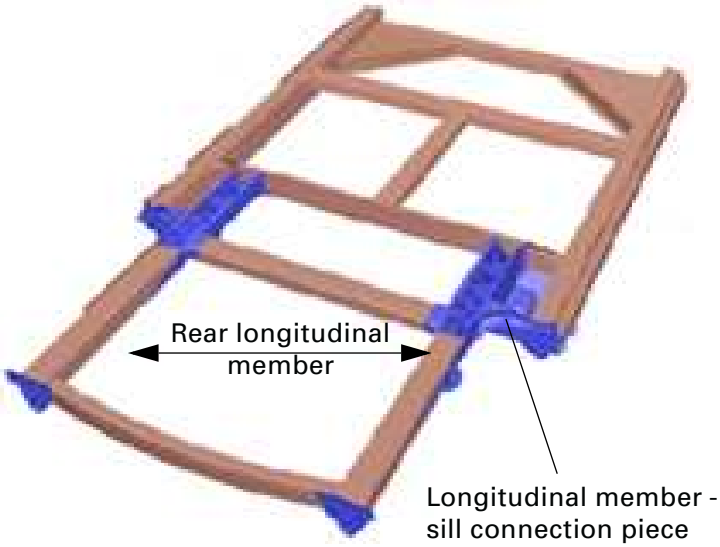

SSP239_023

Ancillary and outer shell panels

SSP239_071

Due to the single-part floor pan and the higher positioning of the front part of the floor pan in the region of the driver’s seat and the passenger seat, additional space has been made available for various ancillary components and control units.

The legroom for the rear passengers and the ergonomically formed seating position have been significantly improved by lowering the rear part of the floor pan. The size and complexity of the floor pan together with its relatively thin wall thickness (for reasons of strength) could only be achieved by a construction-related deep-drawing simulation.

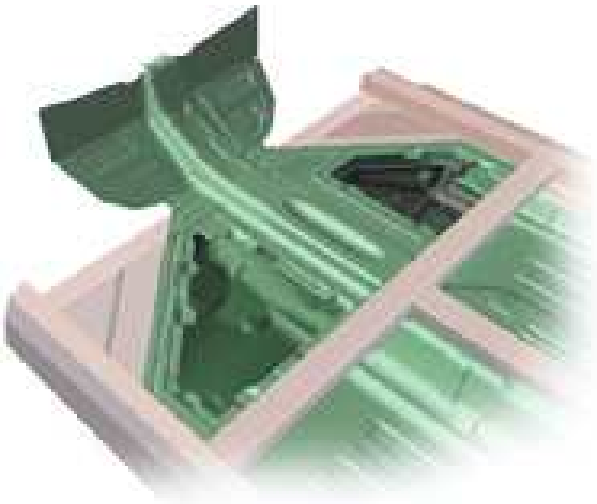

SSP239_027

Ancillary and outer shell panels

The materials used on the Audi A2 are mainly heat-hardened. This is because they offer the best compromise between good plasticity, good mechanical properties and good anti-corrosion properties.

After the material has been formed or the raw body shell has been completed, the properties of the material are changed by heat treatment (205 °C) in the body assembly line. This improves mechanical properties such as the apparent yielding point and the tensile strength to give values comparable to those achieved with conventional deep-drawn steel.

This improvement of material properties by subsequent heat treatment allows further optimisation of weight.

The outer shell panels are dimensioned to avoid permanent dents due to hailstones or local pressure during polishing or when closing doors/lids/tailgates.

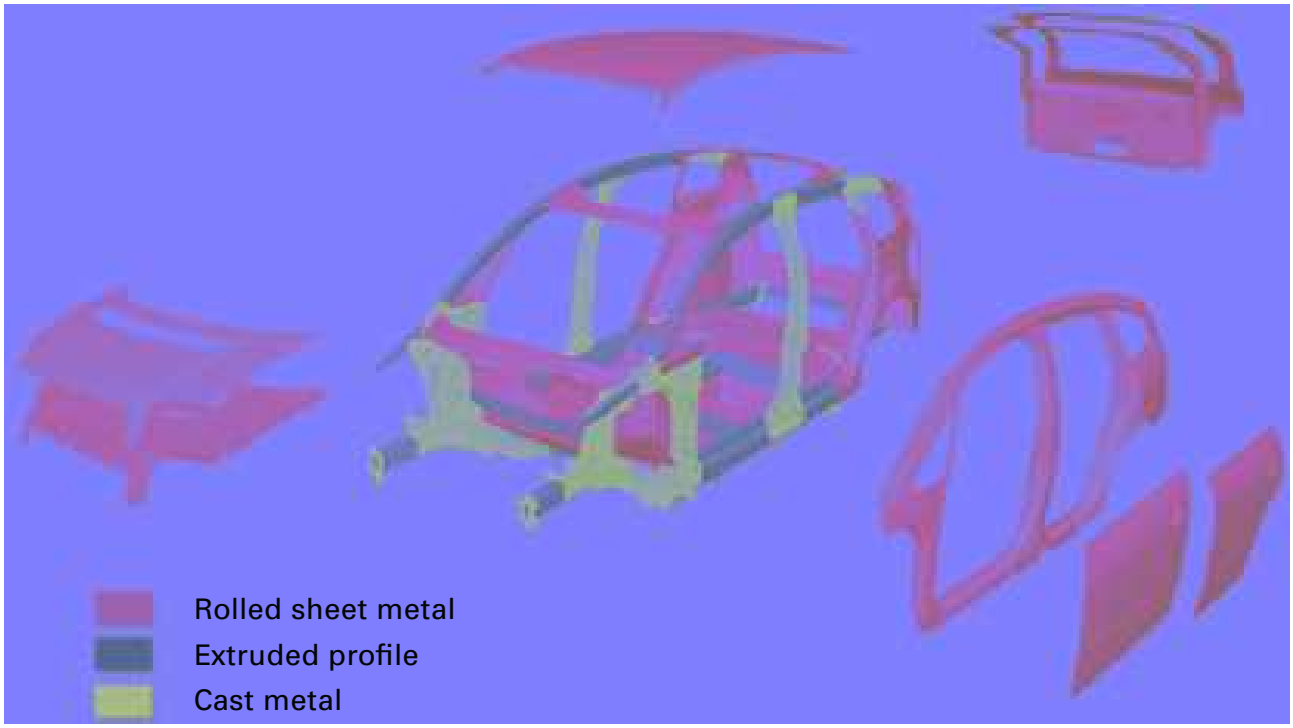

SSP239_013

Reduction of the number of body parts

Side panel

SSP239_014

The side panel on the A8 consists of 8 parts.

SSP239_015

The side panel on the A2 is a single part.

Comparison of the B-pillar between the A8 and the A2

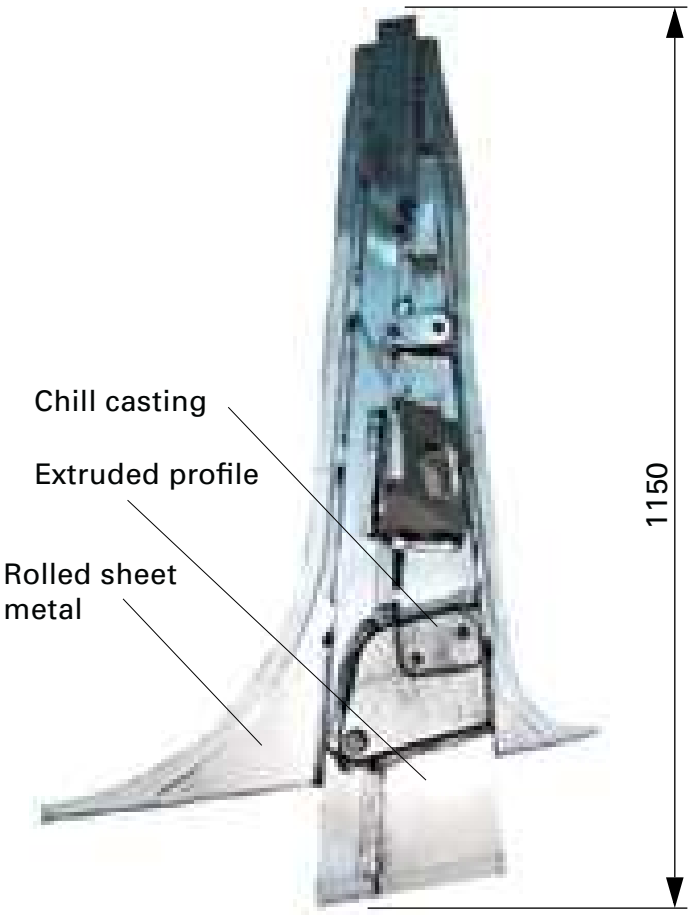

SSP239_016

SSP239_017

The B-pillar on the A8 consists of 8 parts and requires various production methods.

Number of parts: 8
Weight: 4180 g

The B-pillar on the A2 is made in one part, requiring only one production method.

Number of parts: 1
Weight: 3200 g

Vacuum die-casting
minimum wall thickness 2 mm

Overview

Comparison of profile types

A comparison of the different profile types highlights the great importance of shaping on the effectiveness of vehicle body shell production, and therefore directly on the number of vehicles produced per day.

The following characteristics distinguish the Audi Space Frame A8:

- low degree of automation, approx. 20 %
- complex final trimming
- tolerance compensation through cast joints
- high proportion of curved profiles

The reduction of complex final trimming improves the relative dimensional accuracy of the parts, as a result of which the necessary tolerance compensations can be reduced to a minimum.

Number of parts in the ASF® A8

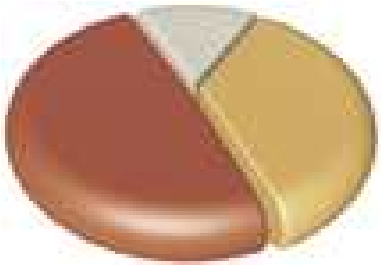

Proportion of curved profiles

straight profiles	–	49 %
2-D curved profiles	–	34 %
3-D curved profiles	–	17 %

The following features distinguish the Audi Space Frame A2:

- high degree of automation, approx. 85 %
- T-joint at fillet weld produces high-precision components
- simple final trimming
- laser welding
- only 4 curved profiles

Number of parts in the ASF® A2

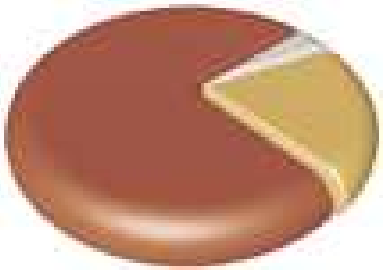

Proportion of curved profiles

straight profiles	–	82 %
2-D curved profiles	–	9 %
3-D curved profiles	–	9 %

Production method

Punch-riveting

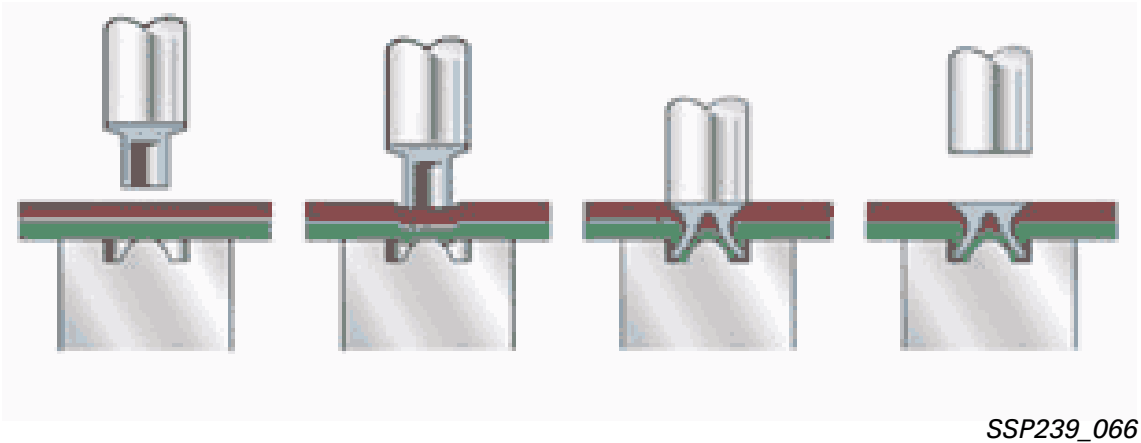

SSP239_066

The number of punch rivets has increased by around 40 % to approx. 1800 compared to the A8. This is because the bonding techniques “beading” and “resistance spot welding” are no longer used.

This is a result of the positive experiences that were made with punch riveting on the A8-Space-Frame.

Only semi-tubular rivets are used in the A2-Space-Frame, with different dimensions depending on the component combination.

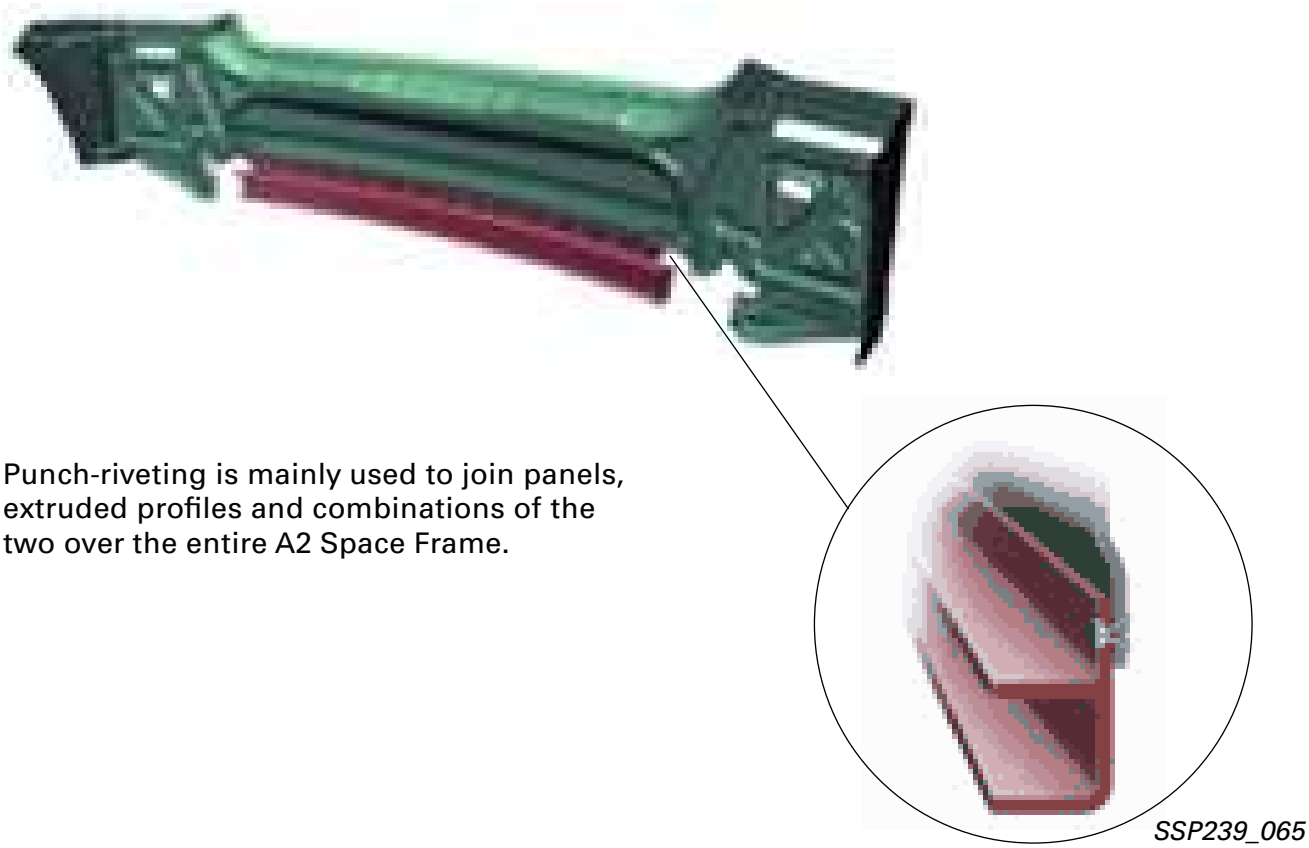

Punch-riveting is mainly used to join panels, extruded profiles and combinations of the two over the entire A2 Space Frame.

SSP239_065

Bonding techniques

Internal high pressure metal forming IHF

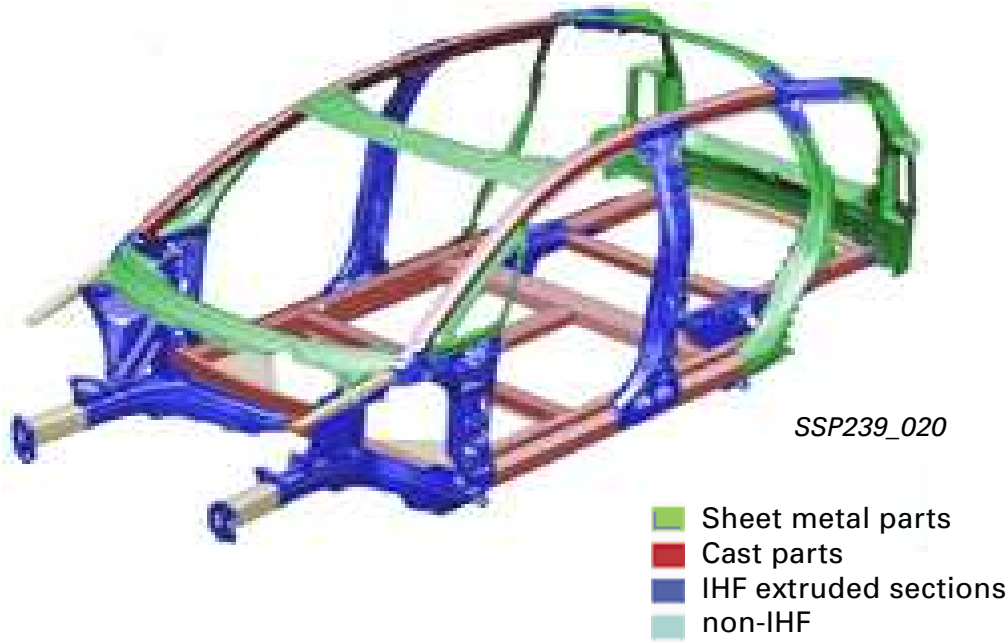

SSP239_020

Process sequence: IHF and bending

The high degree of design freedom in terms of the cross-sectional geometry of extruded profiles makes it possible to optimise components in terms of shape, function and weight.

IHF formed roof frame on the A2

The required tolerances of +/– 0.2 mm can only be achieved by IHF.

Subsequent processing stages are not required.

This process makes it possible to produce the roof frame as a component with different cross-sections.

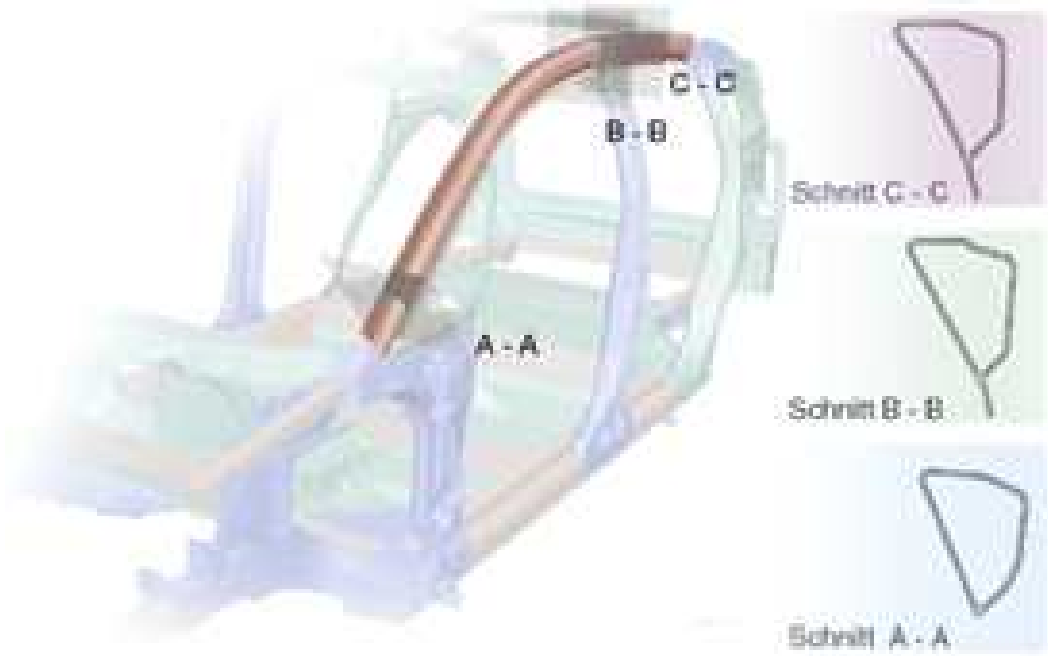

SSP239_030

Production sequence, shown on the example of a longitudinal member

Once it has been cut to length, the profile is laid into a tool consisting of an upper part and a lower part.

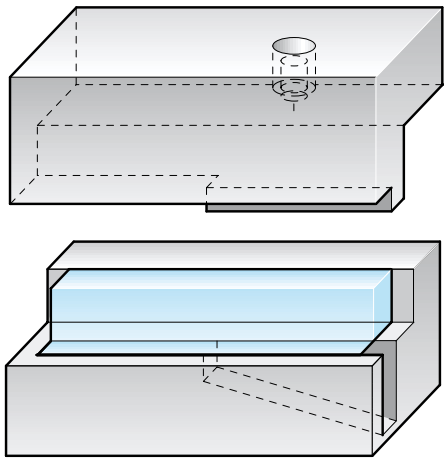

SSP239_024

As the tool closes the flange is trimmed. At the same time, the axial cylinders are driven in and the profile is filled with liquid.

A pressure of approx. 1700 bar is then built up, and the profile is formed in the tool shape and calibrated.

When the final pressure is reached the hole cylinders, which up until this point have closed off the openings for additional hole operations, are driven outwards.

As a result, a defined part is pushed out of the profile together with the hole cylinder, thus creating the break-out.

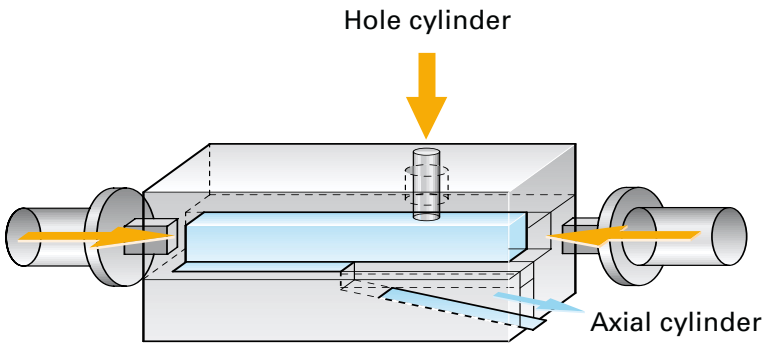

SSP239_025

The part can then be taken out.

The entire process takes about 25 seconds.

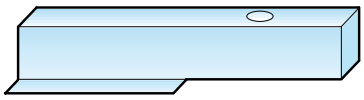

SSP239_026

Bonding techniques

Metal inert gas welding

MIG welding is used to join together extruded profiles to build up the frame structure.

With this thermal bonding technique extensive production experience is available. On the Audi A8 approx. 70 m of welds on each vehicle are MIG-welded.

This method has established itself as economical and highly flexible.
However, its disadvantages are the high heat impact and the low bonding speed.

The Audi A2 only requires about 20 m of MIG welds.

The highly developed plant engineering is controlled via a process monitoring system. Large rollers are used which increase the bonding speed, and weave pass welding is not required.

SSP239_047

Just like on the Audi A8, MIG welding is also used on the Audi A2.
Thanks to optimisation measures in production and a significantly higher precision of components due to the IHF calibration it has been possible to increase the level of automation.

MIG welding in the floor structure of the A2

MIG welding is mainly used to bond the extruded profiles in the floor assembly (profile T-joints).

In addition, MIG welding is also used in the construction of the front and rear ends, where extruded profiles, cast parts and combinations of the two are welded.

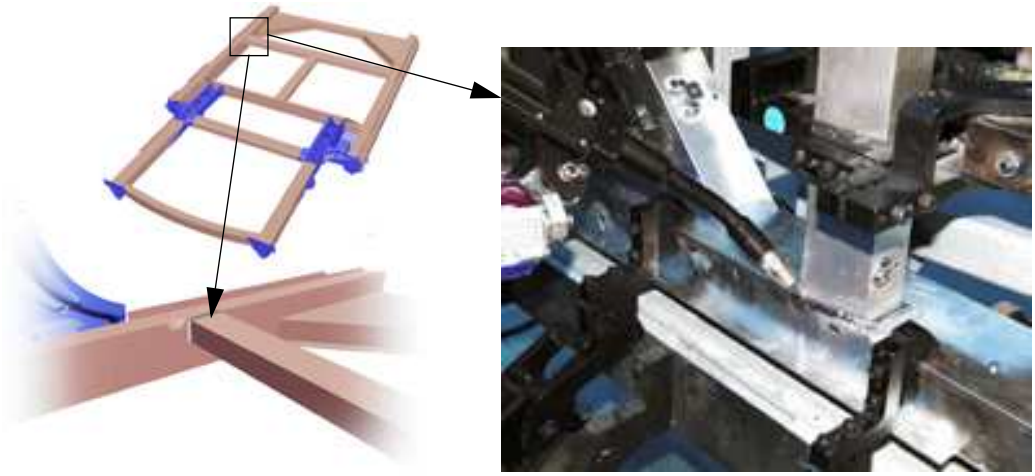

SSP239_049

Laser welding

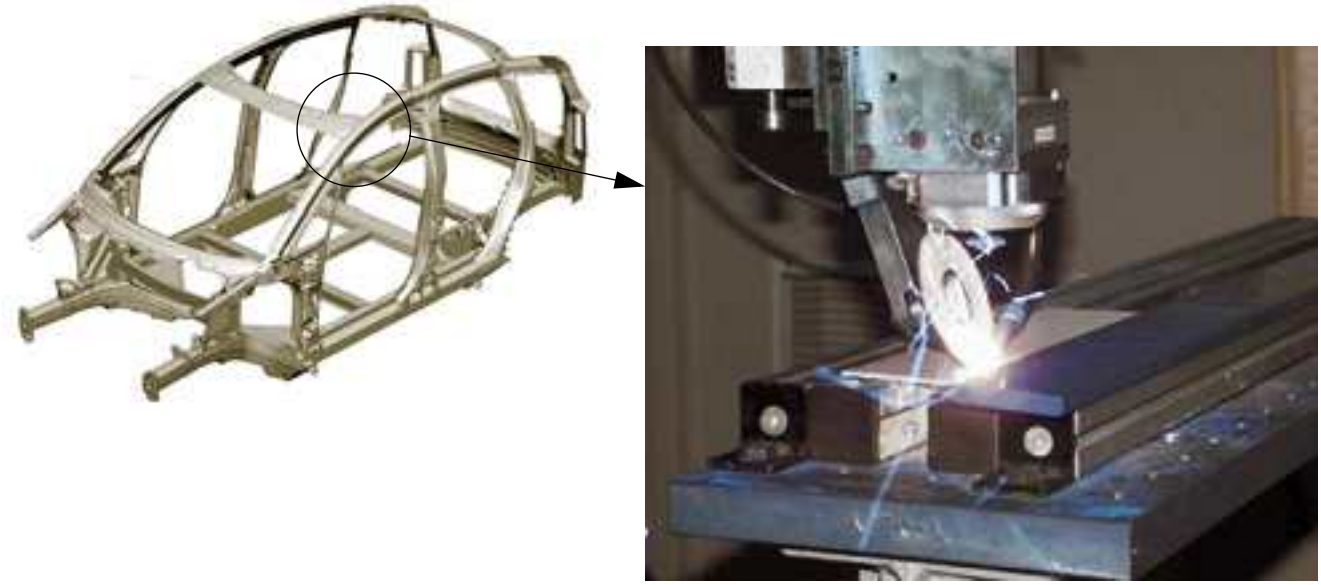

SSP239_051

The process of laser welding is used to weld sheet metal/extruded profiles and cast parts.

In the A2 the following welds are achieved with a lap seam:

- sheet metal to sheet metal
- sheet metal to cast parts
- cast parts to extruded profiles

In this way it is possible to replace the bonding techniques of spot welding, riveting and MIG welding.

Laser welding offers the following advantages:

- high productivity
- high rigidity
- weight savings (through smaller overlap)
- access only required from one side
- very little distortion as a result of the low heat impact in the process
- simple, clean seam design
- no surface pre-treatment required

Laser welding head

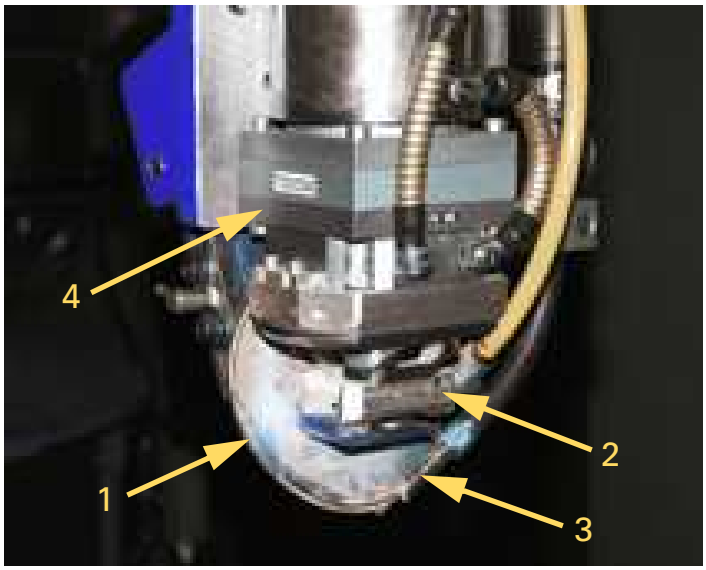

1 - pressure roller
2 - cross jet
3 - wire feed
4 - focussing optics

Bonding techniques

Use of lasers on steel Audi vehicles

A4 saloon
C-pillar

Use of lasers in
production of raw body shells

A6 saloon/Avant
Roof/side

A3
Roof/side

A4 Avant
Roof/side

TT
C-pillar (brazing)

Laser weld seams in the ASF® of the Audi A2

SSP239_073

Laser weld seams

At the time of production planning for the A8 it was felt that laser welding of aluminium alloys was not yet fully achievable, which is one of the reasons why MIG welding was chosen.

However, serious consideration was given to alternative welding methods already in the concept phase of the A2-Space-Frame.

For just a few years now powerful enough laser sources have been available that meet the necessary requirements for aluminium and can be used in production.

SSP239_054

SSP239_056

SSP239_055

Bonding techniques

Laser weld joins on the B-pillar

Laser welding is predominantly used on the A2 for the welding of large area sheet metal parts with the body structure of cast metal and extruded profiles.

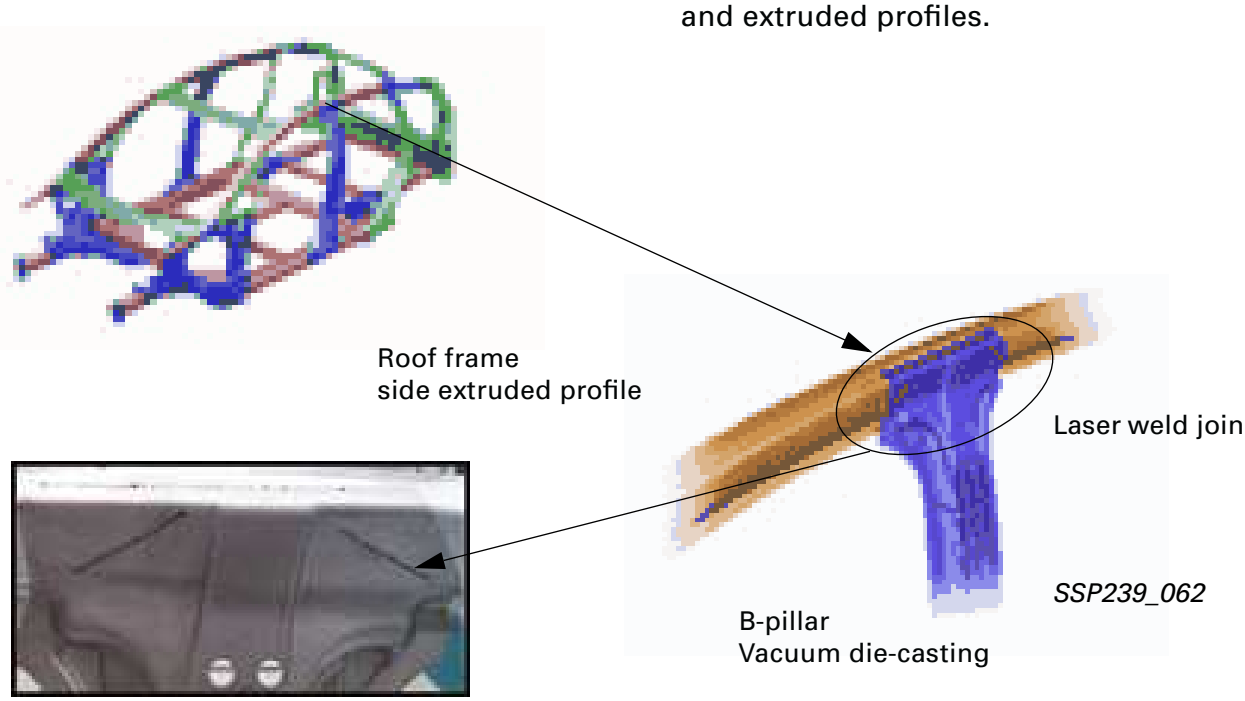

Laser weld join on front door

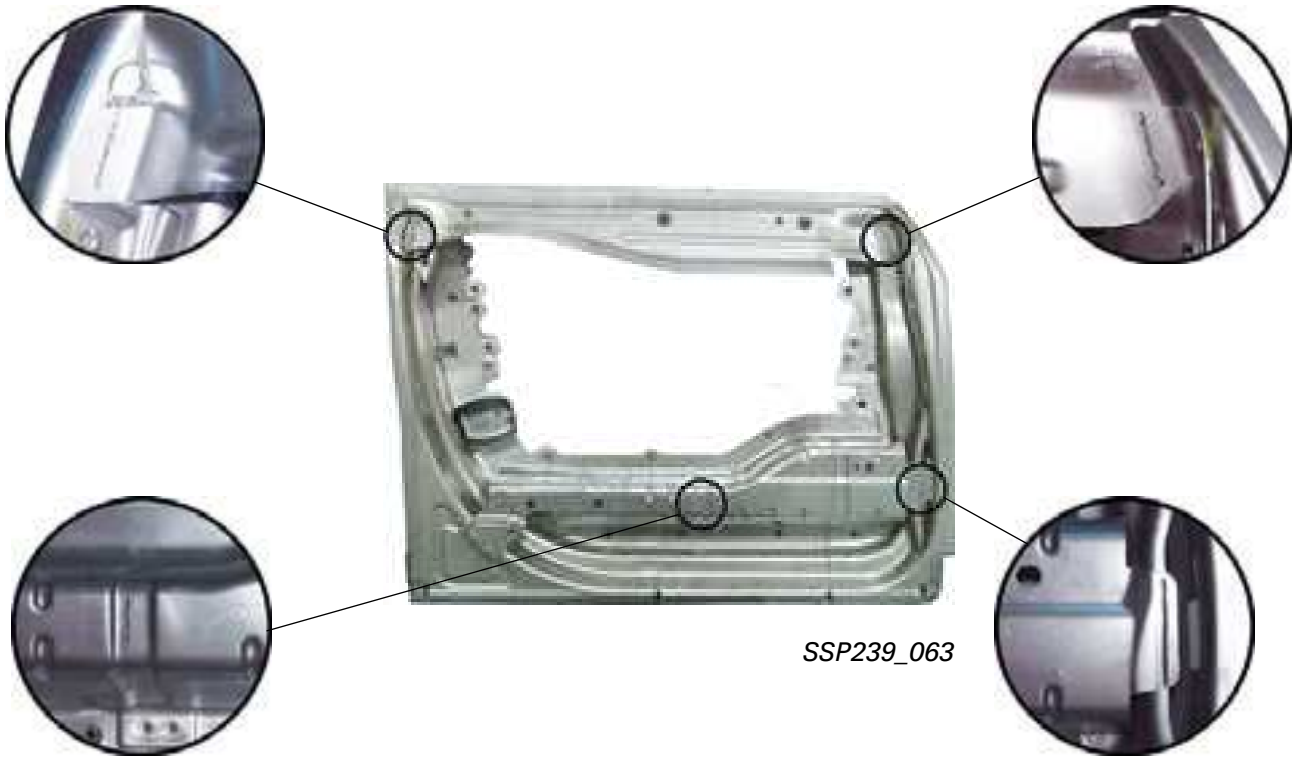

Laser weld joins in the floor assembly

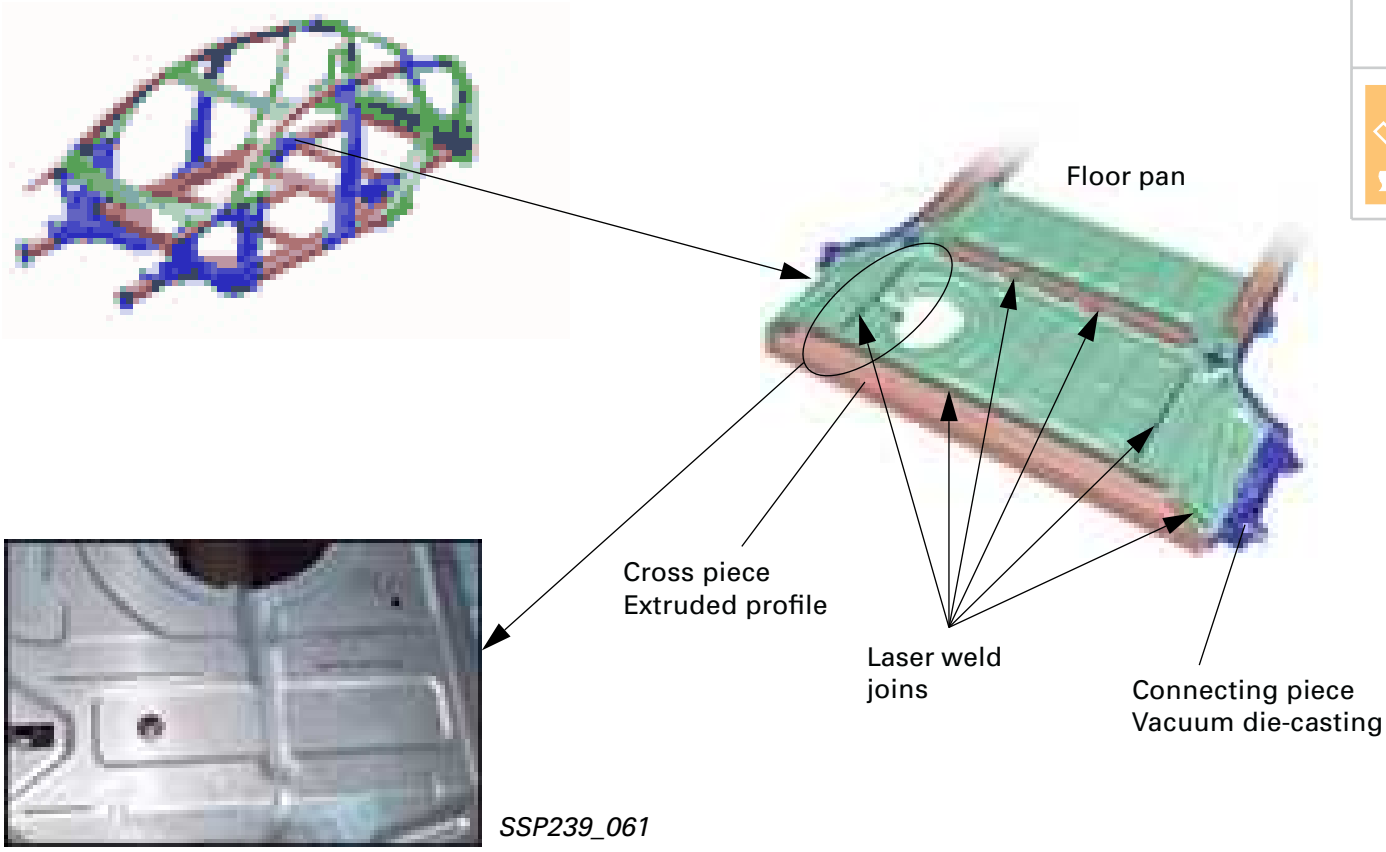

SSP239_061

There are a total of approx. 30 m of laser weld seams on the A2-Space-Frame.

Examples for this are the attachment of the B-pillar, the joining of the floor panels to the MIG-welded extruded profile frame structure, the attachment of the roof to the body superstructure or the joining of the one-part side panel to the roof frame and the doors.

Open Sky

Design and function

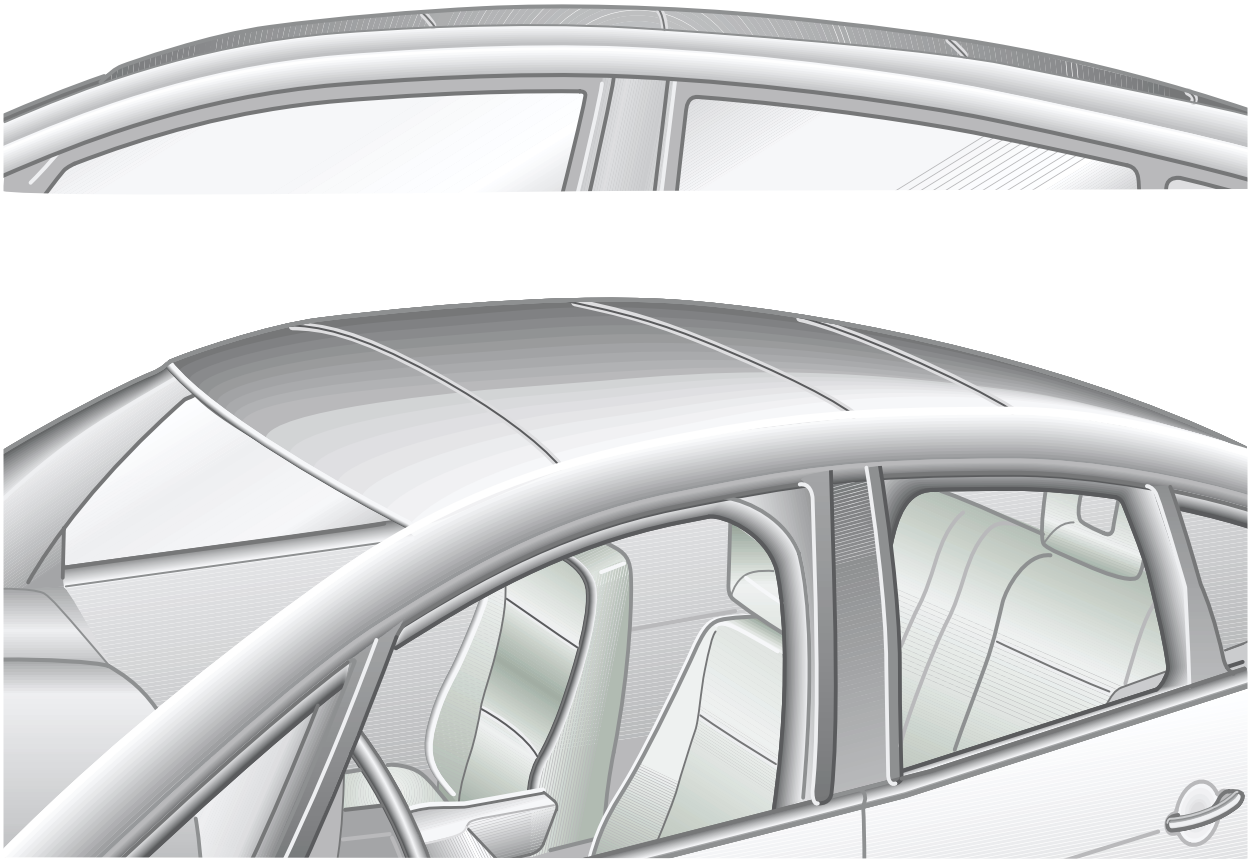

SSP239_036

Roof closed

The Open Sky glass module roof is the first roof system in the world to fill out the entire roof of the vehicle.

The continuous glass forms a complete unit. The roof system reaches from the windscreen to the rear window, and from the left-hand side panel fame to the right-hand frame.

The transparent area as seen from inside the vehicle is approx. 166 % larger than on a comparable opening roof.

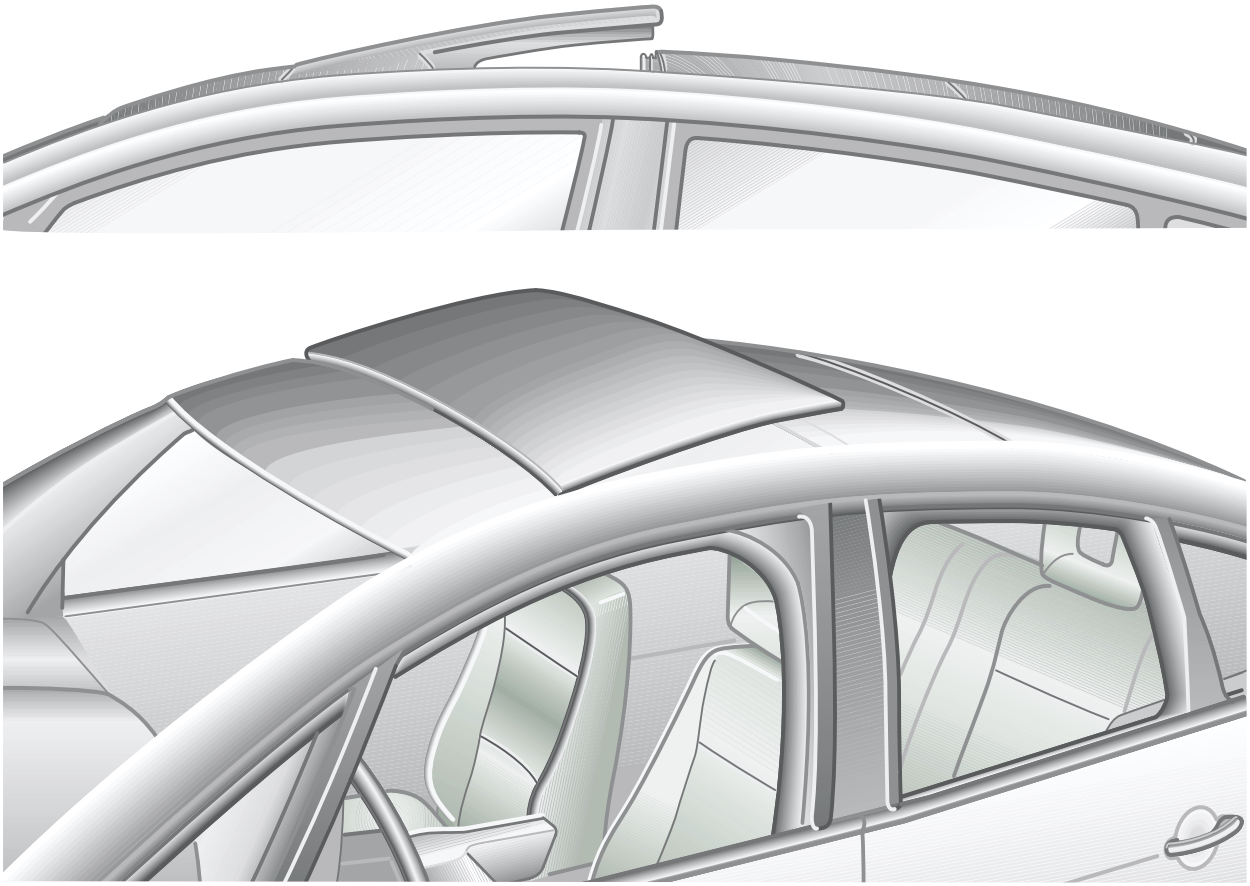

SSP239_037

Roof open

When the roof is open additional fresh air is provided on top of the vehicle's fresh air system. This provides very pleasant ventilation.

SSP239_038

Front part of roof opened

If the front part of the roof is opened then the front part of the glass roof moves back over the rear part.

At the same time a wind deflector is raised. It reduces the wind noise that otherwise arises from the air flow and also prevents draughts.

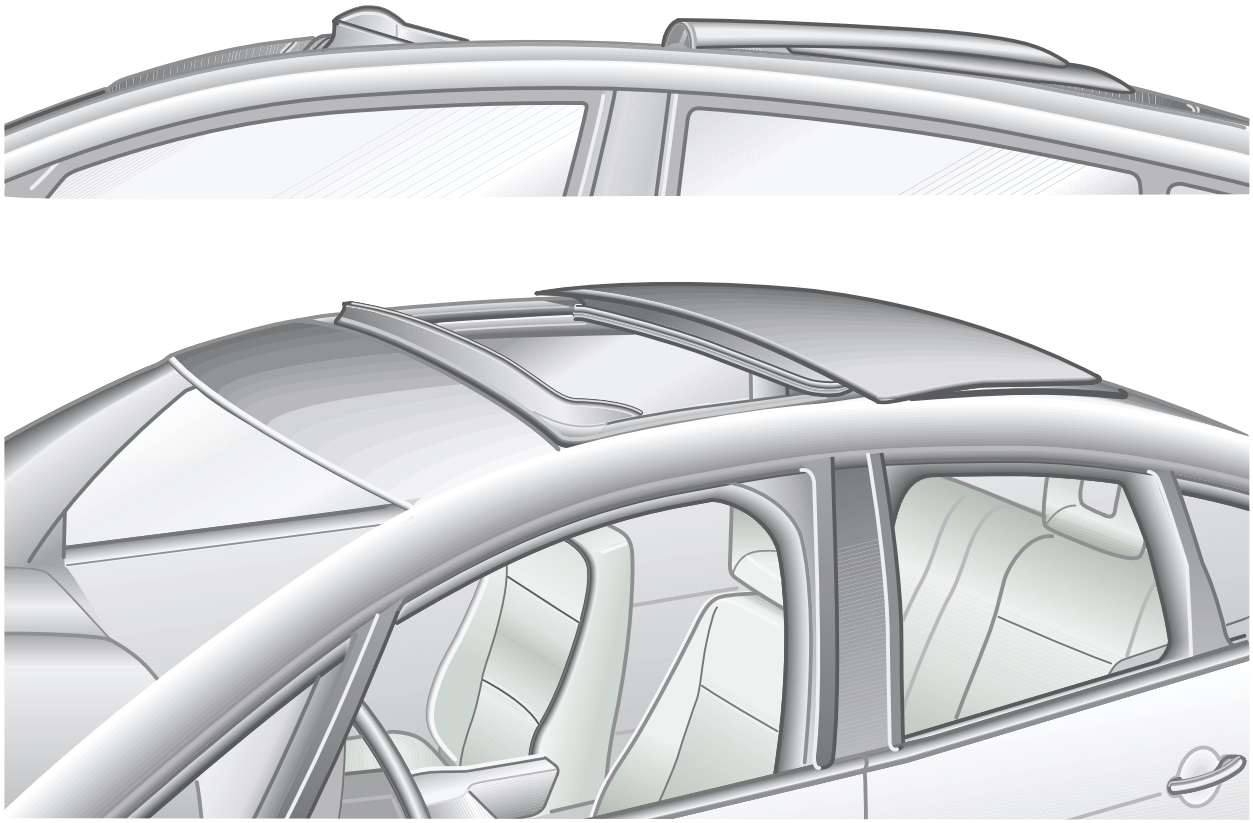

SSP239_039

Roof fully opened at front and rear

If the glass module is fully opened then the front part of the glass roof moves back over the rear part, picking it up and taking it to the rest position. A freely moveable screen reduces the amount of sunshine entering the vehicle without any loss of ventilation.

A water run-off system integrated into the roof frame prevents the ingress of residual water while the roof is being opened, as well as the ingress of rain water or wash water.

The roof opening is approx. 58 % larger than on comparable systems.

Assembly work

The glass module roof is assembled from above on the tubular structure of the vehicle, and then bolted to it from below.

The height adjustment of the module is preset by special tool VAS 6010 and ensured by height adjustment elements.

The module frame consists of two guide rails, a fixed glass roof at front and rear and a tube carrier which is to contain the operating cables for the electrical drive.

A foam seal provides the necessary sealing.

A fixed cover frame covered with cloth provides the link to the internal headlining of the vehicle.

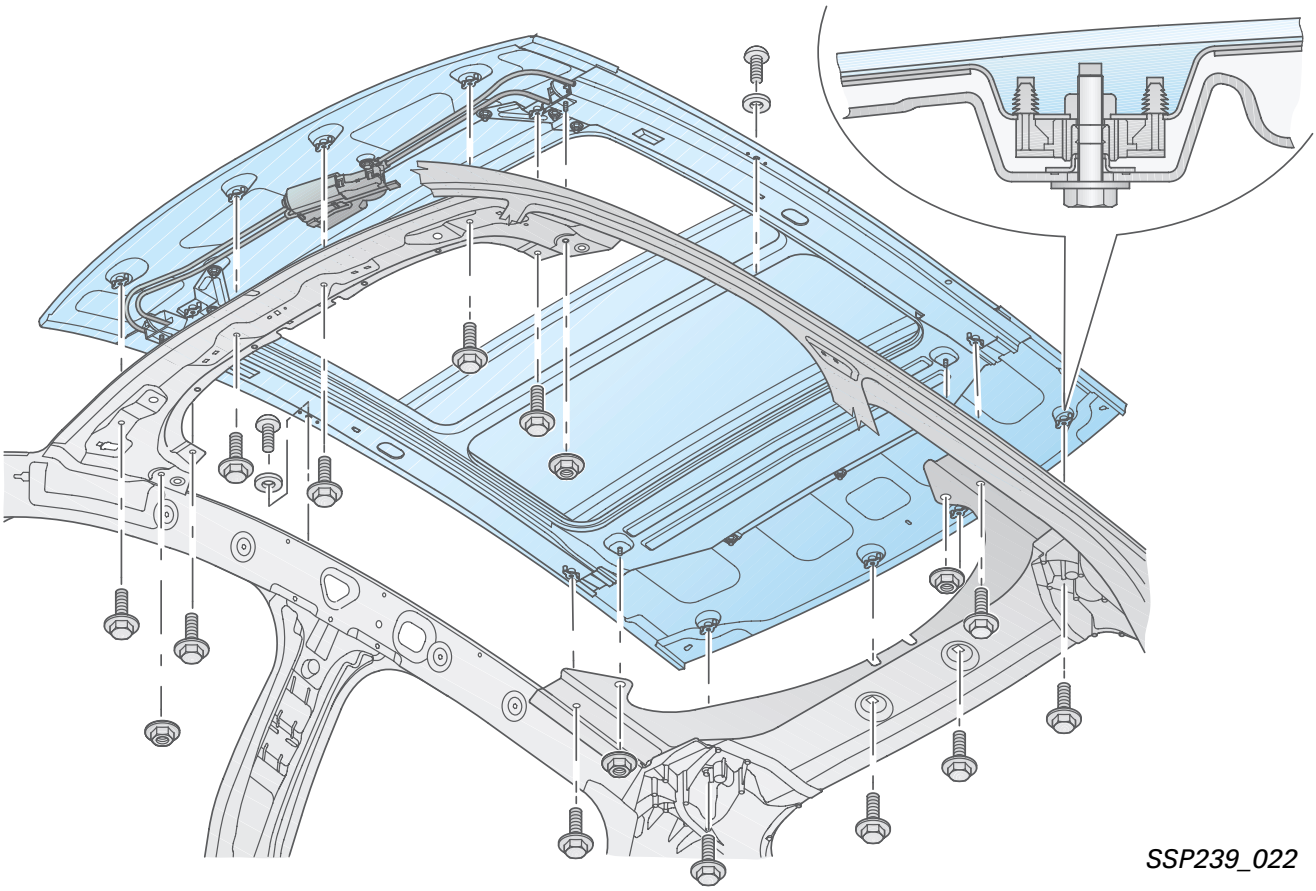

SSP239_022

Occupant protection

SSP239_093

The Audi A2 is equipped with full-size airbags as standard on the driver's side and the passenger side.

The layout of the airbag systems, including the size of the bag, the characteristics of the gas generator and the exiting speed of the gas after ignition, was optimised and co-ordinated with the aid of virtual development and simulation tools.

This side structure is capable of absorbing large forces with only a low impression depth thanks to its use of two-chamber hollow profiles and continuous frame-stays.

In addition the structure is supported by the die-cast, one-part B-pillar, which is bonded to the floor structure and the roof frame assembly.
The strains that can occur during a crash are below the bio-mechanical limits.

This is due to the large area impact carriers located in the doors and the B-pillar which deform in a pre-defined way.
They transmit the impact forces to the cell structure.

The A2 is also equipped with Thorax lap airbags as standard on the front seats.
These side airbags are located in the in the seat backs and are always positioned so that they can operate, regardless of the setting of the seat.

In the M equipment level, the head airbag system SIDEGUARD is also offered in addition to the side airbag and the side impact protection for the front and rear seats.

Front seatbelt pre-tensioners, belt force limiters and the child seat securing system ISOFIX for the rear seat bench are fitted as standard in the basic model.

Occupant protection

Simulation is a very important tool for the development of occupant protection systems. At an early stage it is possible to determine the main deforming processes from the structural behaviour based on CAE calculations.

Simulation offers the possibility to view and optimise the structural behaviour and the effectiveness of the occupant protection system as a whole unit.

As well as meeting the legal crash requirements, the European higher-speed frontal crash law with increased speed is also satisfied.
At an impact speed of 64 km/h in an offset crash the structure of the vehicle remains stable enough to allow the doors to be easily opened.
Compared to the legally required speed of 56 km/h this represents approx. 30 % higher impact energy.

The European side crash requirements (crash between a moving barrier with deformable collision body and the stationary vehicle) were met with high safety standards.
This is achieved through the particularly rigid cell, the occupants' survival zone. The covering of the doors with the posts and the sill prevents the doors from sliding over into the passenger compartment.

Despite the low weight of the supporting structure, deformation in the roof area is very small, even with the glass module roof, and it offers excellent rollover protection.
This is due to the intelligent pairing of the bonding technology and the specific design of the body parts.

SSP239_094

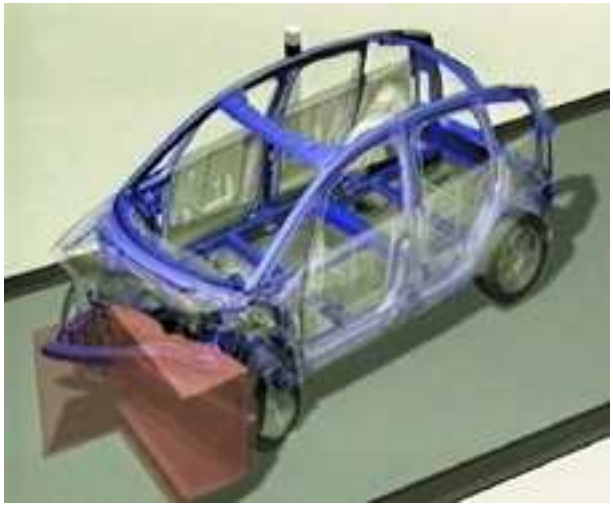

SSP239_095

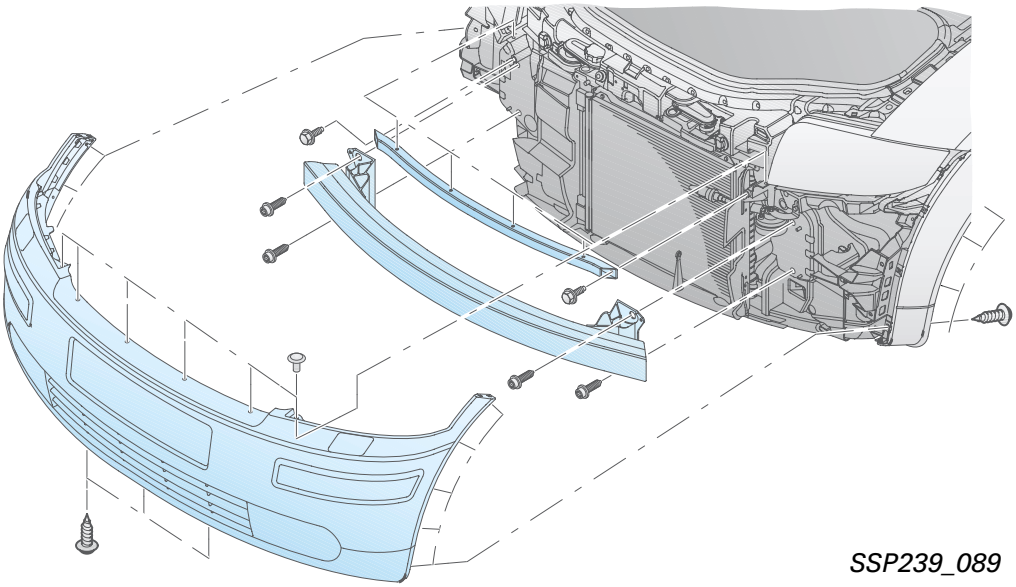

SSP239_089

The aluminium bumper consists of a multi-chamber hollow profile and forms a weight and force-optimised crash unit together with the longitudinal member system and the structure of the occupants' cell.

Planned deformation of the front end dissipates the impact energy without affecting the stability of the occupants' cell.

The stable crosslinks in the bumper mean that even if the impact force is only felt on one side, the side facing away from the impact can still be included in the deformation process.

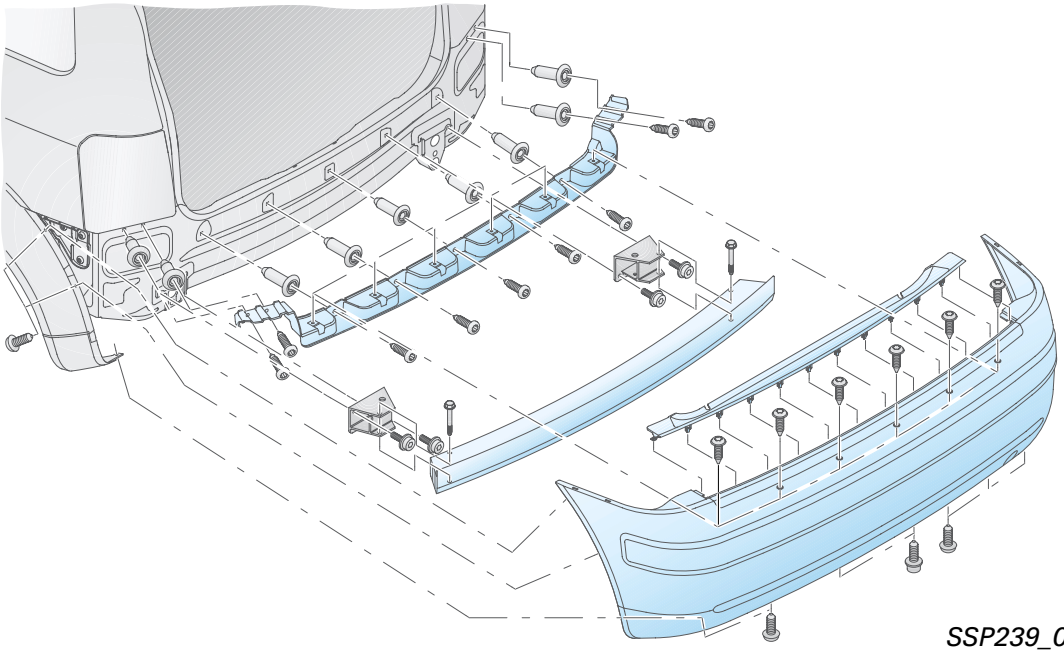

SSP239_090

The main concern at the rear end of the car is to ensure that the shape of the vehicle is stable around the fuel system.
Careful use of extruded profiles and aluminium die-cast components means that in a crash situation the rear end of the vehicle deforms in different stages from the end of the vehicle to the occupants' cell. The strain on occupants is clearly below the legal limits.

Airbag control unit J234

A self-test is performed every time the ignition is switched on. The system checks to see whether the connected peripherals actually match the coded equipment version.

The deceleration curve caused in a collision is detected by the control unit, which then decides which of the different airbag systems to trigger. If the deceleration is below the reference values set in the control unit then the airbags are not triggered.

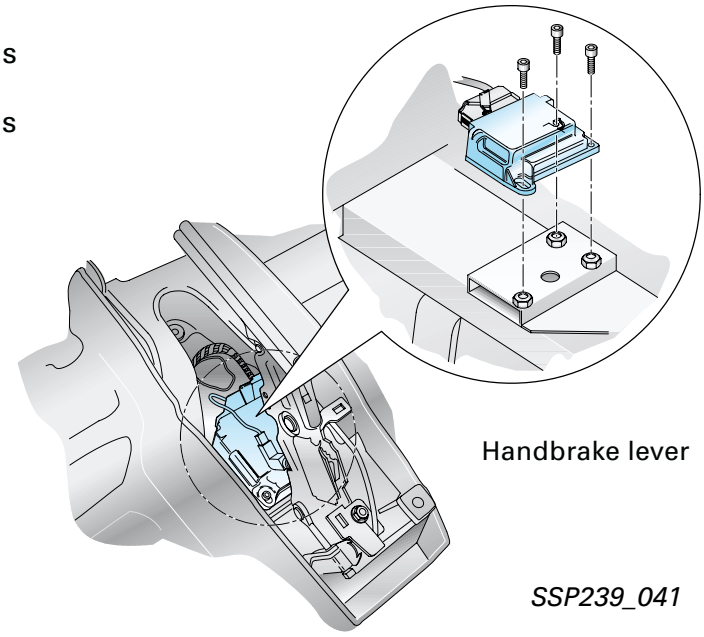

SSP239_041

Side airbag sensor G179/G180

In order to accurately determine the lateral deceleration in an accident the vehicle is equipped with a lateral acceleration sensor in the B-pillar on both sides. They are connected to the airbag control unit J234 and convey the size and direction of the deceleration.

The plausibility of the sensor signal has to be checked before the output stage of the airbag in question is activated.

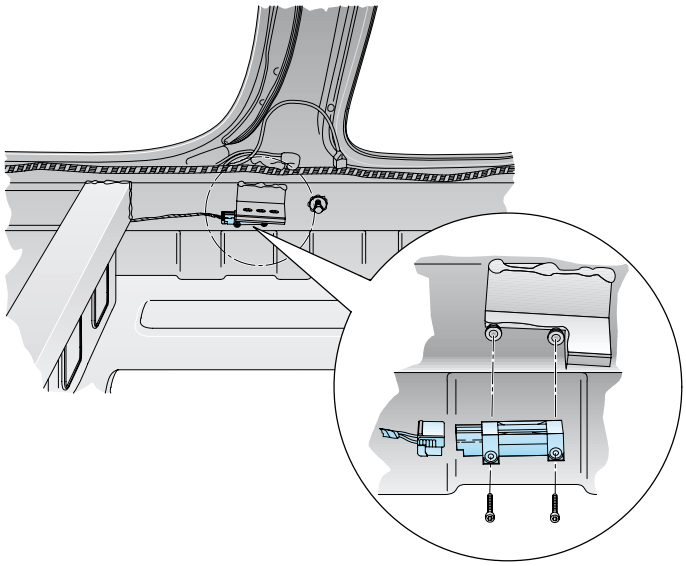

SSP239_042

For further information refer to SSP 213, page 9.

Ball seatbelt pre-tensioner

Both of the front seatbelt inertia reels are equipped with pyrotechnic tensioners that are triggered with an appropriate force in the event of an accident.

The balls are driven by a pyrotechnical propellant load. This kinetic energy is transferred via a gear wheel to the belt capsule. The seatbelt is wound up to remove any belt slack and reduce the load on the occupant.

Testing a fired seatbelt pre-tensioner:
There should be a clear rattling noise when shaking a seatbelt pre-tensioner that has been removed from the vehicle.

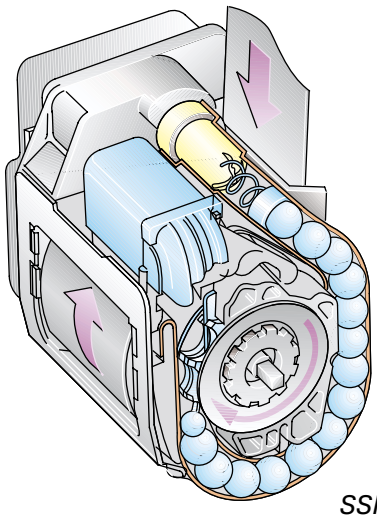

SSP239_048

Belt force limiter

The additional belt force limiters in the front inertia reels have the effect of keeping the forces exerted on the shoulder (even in head-on collisions) to a defined level.

A torsion spindle in the inertia reel allows for compensation of up to 10 cm belt length.

The outer rear seats are equipped with a 3-point safety belt.
Belt force limitation is achieved by means of a pre-defined tearing seam in the belt.
This limits the strain level placed on the occupants in the rear seats.

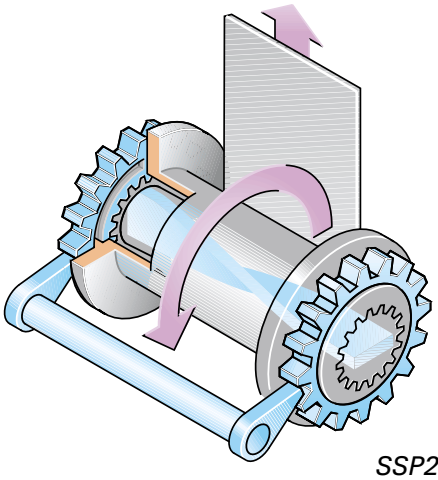

SSP239_046

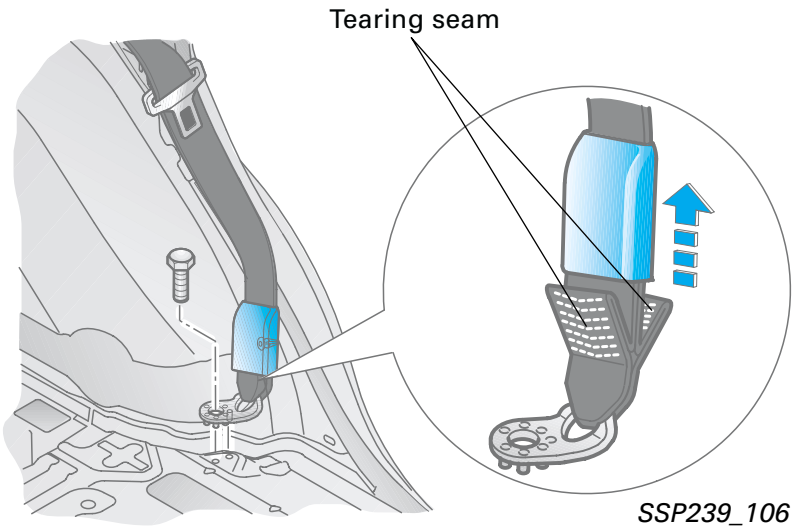

SSP239_106

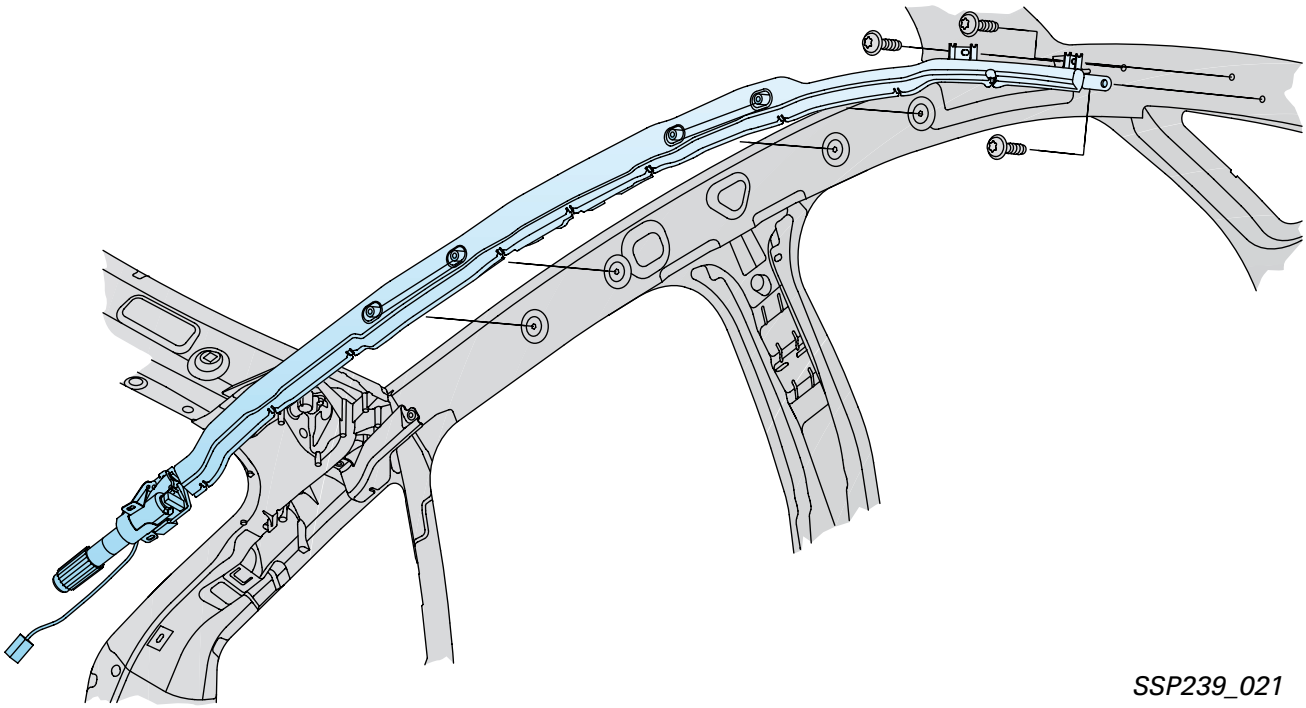

SSP239_021

The head airbag module is located on the left and right, above the doors behind the headlining. It stretches from the D-pillar (attachment of the ignition module) to the A-pillar.
It unfolds as a single bag along the side windows.
Depending on the situation in which the airbag is triggered the head airbags may trigger together with the side airbags on the side of the impact.

The complete covering of the side windows and A-pillar protects against inwardly-bound body structures and glass from broken windows.

The head airbag remains filled for approx. 5 seconds after it is fired to protect the occupant if the vehicle subsequently rolls over.

Child seat securing system ISOFIX

The child seat securing system ISOFIX is fitted as basic equipment on the outer rear seats in the A2. In the M equipment level the ISOFIX securing system can be ordered for the front passenger seat, but only in conjunction with the airbag key switch.

The ISOFIX securing system makes it easier to remove and install child seats and significantly reduces the risk of incorrect fitting.

The stable fitting of the child seat enhances its comfort and offers a high level of protection for children.

SSP239_043

Airbag key switch (optional)

The airbag key switch in the glove box enables the driver to deactivate the passenger airbag (optional).

SSP239_044

Deactivation via tester VAS 5051 takes priority over deactivation with the airbag key switch.

Passenger airbag OFF warning lamp

A warning lamp is permanently lit up to inform the driver that the passenger airbag is switched off.

SSP239_045

Repair concept

The experiences with the repair concept of the A8 were taken as the starting point for a new repair concept to take in the special features of the A2.

The design of the body structure with pre-programmed, defined deformation zones minimises the straightening work required after an accident and determines the repair sections by design.

As a result the repair times are reduced and the repair costs are less than or approximately the same as standard steel bodies, despite the new body technology.

A qualified dealer with the necessary equipment to repair the damage is available, depending on the type of damage incurred.

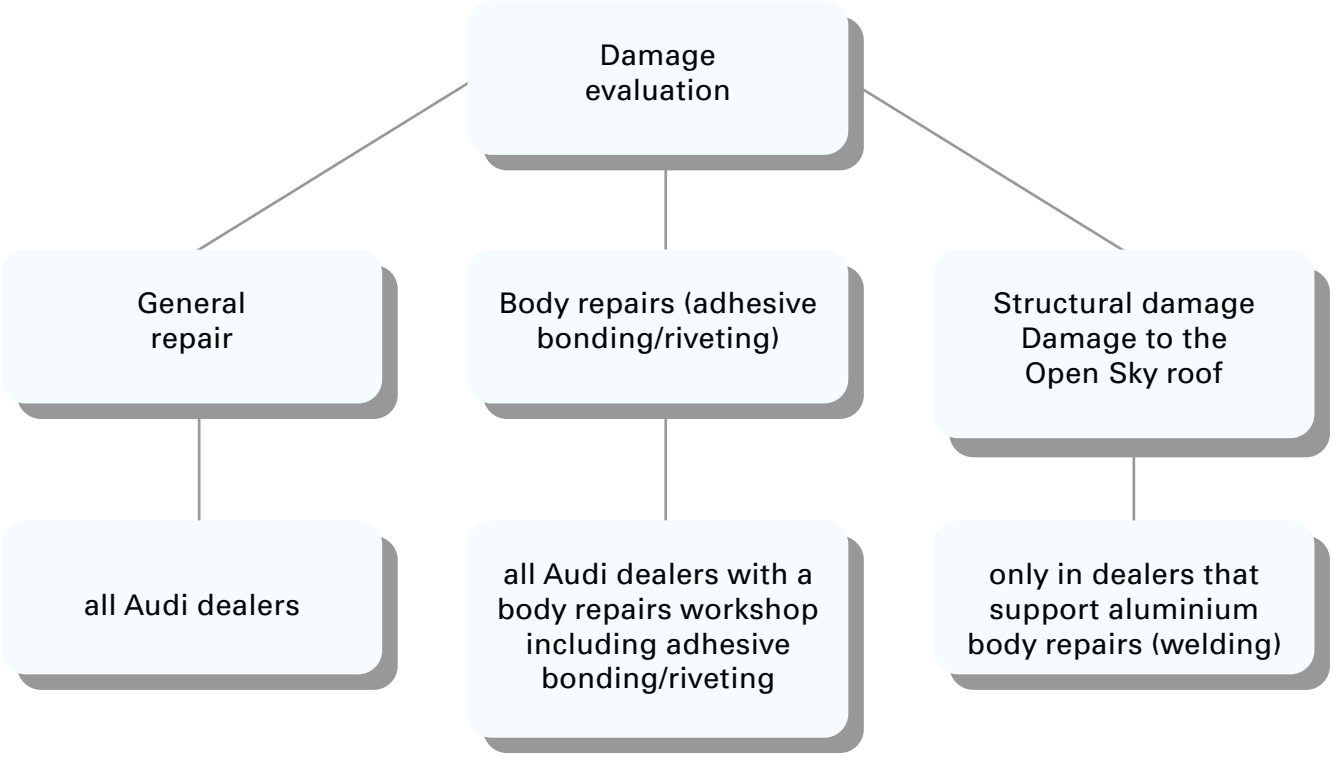

New workshop tools for:

General repairs

- Mounting/support for front top

Body repairs

- Additions to compressed air riveting tongs V.A.G 2002

Structural damage, damage to the Open Sky roof

- Mounting fixture for the Open Sky roof VAS 6010
- Additions to aluminium welding tool V.A.G 2001
- Additions to portal gauge VAS 5007
- Attachment set (for bench-type straightening system) VAS 5195

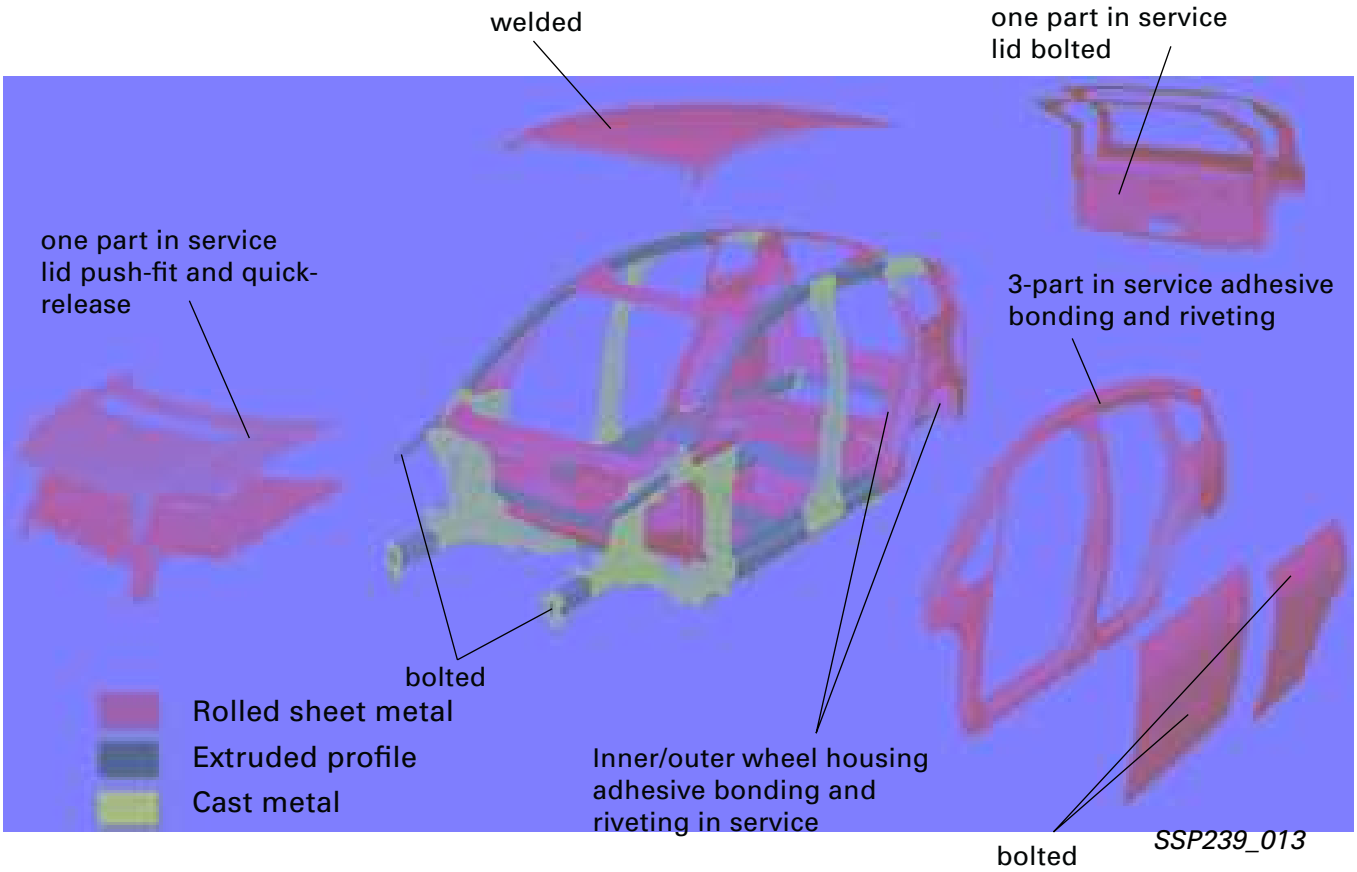

Depending on the different types of semi-finished products (sheet metal, cast parts and extruded profile parts), different concepts are used for repairs on the A2.

Sheet metal parts with only slight deformations can be reshaped. More heavily deformed panels can be replaced either as a unit or by section.

The bonding techniques that are used are riveting in conjunction with adhesive bonding, using a cold-curing two-component adhesive.

Any existing punch rivets, e.g. on the side panel, are pressed out with the aid of a special tool and replaced with a full rivet or blind rivet after replacement.

All newly fitted rivets are also secured with a two-component adhesive.

Filling and painting are carried out in the same way as for the Audi A8.

Repair concept

Different strength grades in the areas of the body most prone to impact in an accident are designed to keep the depth of damage and therefore the associated repair costs as low as possible.

The layout of the front end is designed accordingly.

A repair concept that has already been applied on the Audi A8 is the replacement of bolted components (see page 58).

For example, the front longitudinal member is the weakest component in the front end structure.
The bolted layout of the front longitudinal member means that small deformations can be repaired relatively cheaply and quickly by replacing the component instead of using additional bonding techniques.

Only when the rear longitudinal member directly behind it has absorbed its maximum quota of deformation energy is the deformation force then transmitted to the occupants' cell.

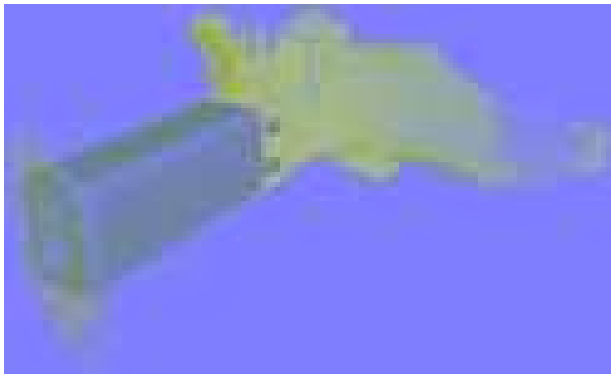

SSP239_019

The same principle is applied to the wing area. Replacement of the bolted wing panel bank and the planking provides a quick and cost-saving repair solution.

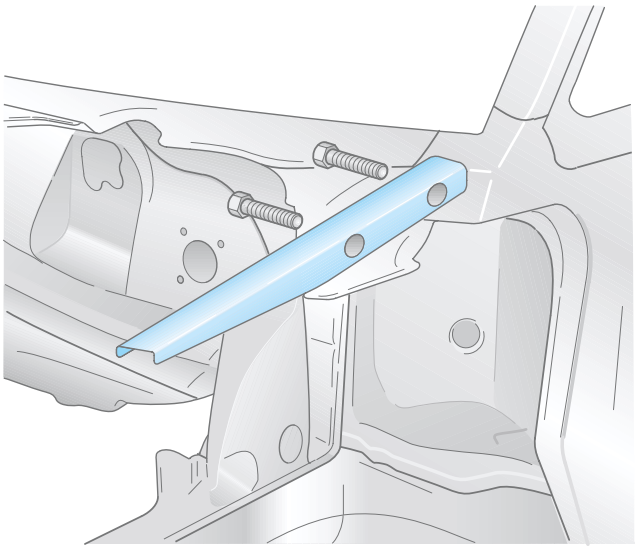

SSP239_105

As a general rule, damaged cast parts must always be replaced.

For strength reasons reshaping is not permitted.

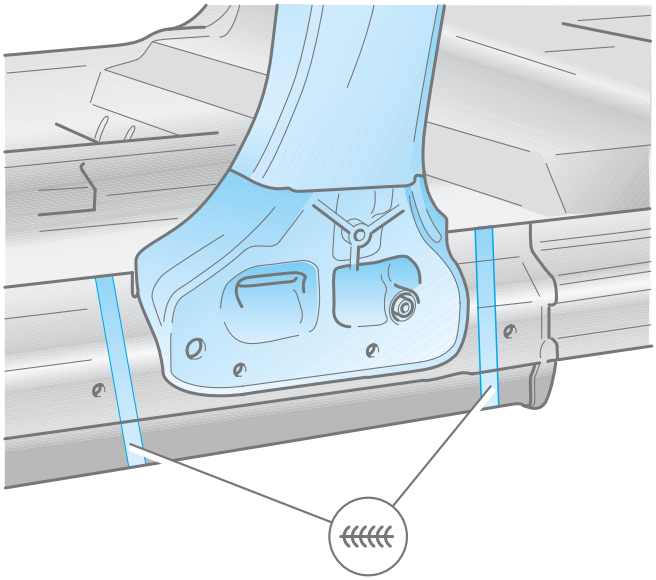

SSP239_098

Due to the high rigidity there is a risk that cracks will form.

The bonding techniques that are used are MIG welding, riveting and adhesive bonding.

The general repair process is demonstrated on the B-pillar.

Extruded profile parts must be replaced if they are damaged. Any reshaping would be uncontrollable.

Depending on the type of damage, parts can be replaced either by section using socket welds in the join area (see Page 59) or as a complete unit.

The replaced profiles and sections are joined by MIG welding.

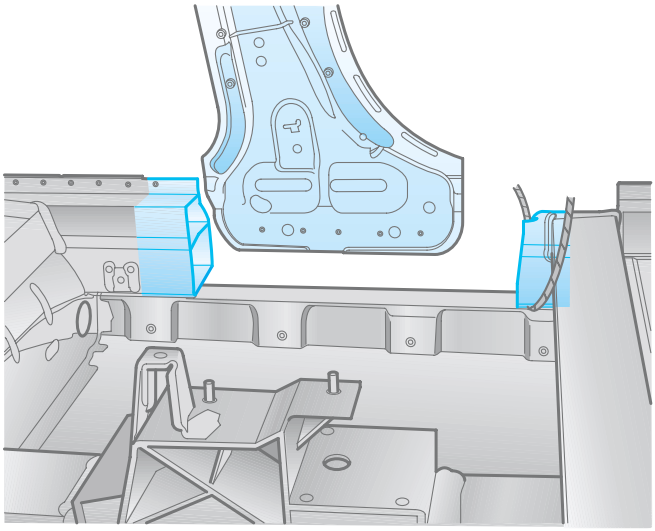

SSP239_099

Repair concept

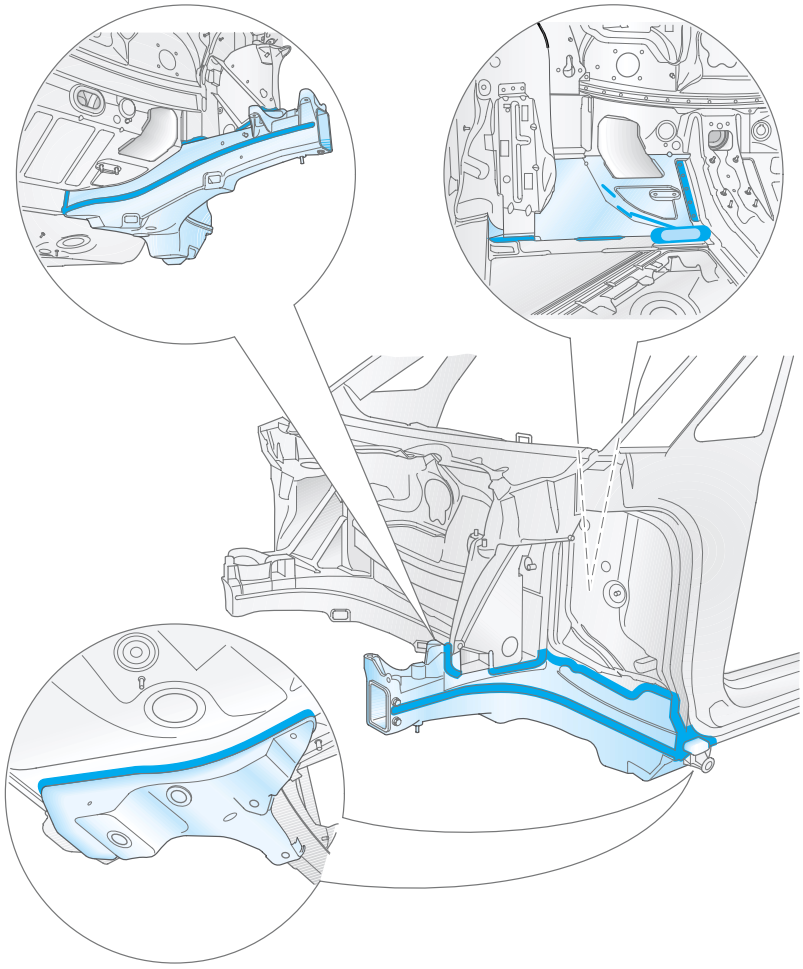

SSP239_100

The assessment of damaged components must pay particular attention to checking both the weld seams and the cast parts for cracks.

A dye penetration test is used to check for surface cracks.

Notes

Painting

After the raw body shell has been finished and the heat treatment has been carried out, the body is cleaned and prepared with a 3-cation phosphating layer (Zn = zinc, Ni = nickel, Mg = manganese) that forms a bonding layer for the subsequent cataphoretic immersion painting (CIP).

By modifying the phosphating (addition of fluorides) it is possible to pre-treat fully galvanised steel and aluminium bodies together.

The subsequent stages of CIP painting, filler and finish coating are identical for all bodies. Any reworking required due to faults in the paintwork is treated in the same way on aluminium bodies as it is on galvanised steel bodies.
All body types are driven together over the same painting system.

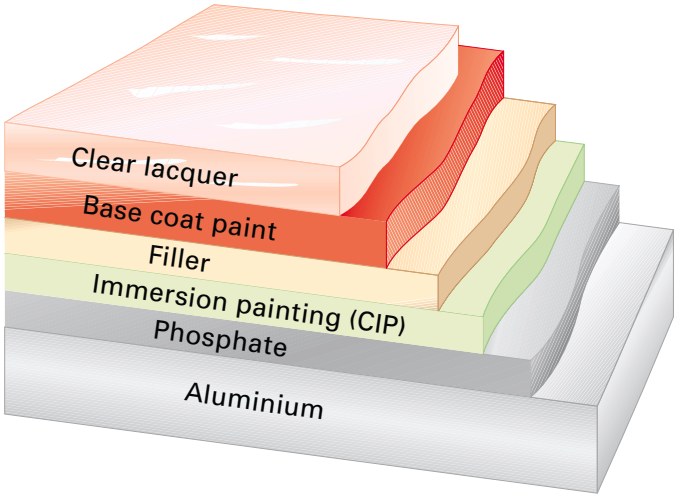

SSP239_064

Pre-treatment of sheet metals: cleaning and degreasing

The first stage of the painting process in production is to clean and degrease the raw body shell. The raw body shell is immersed in a cleaning tank and then sprayed with a degreasing solution.

After rinsing and drying all of the grease residue on the body has been removed.

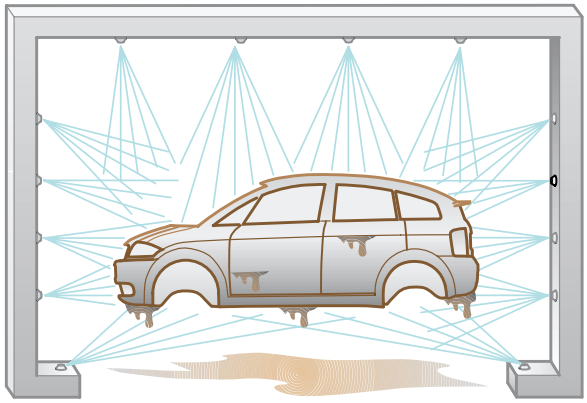

Phosphating

During phosphating the body is immersed in tanks with various phosphate salt solutions.

This produces a metal-phosphate crystalline layer on the body metal. This means: optimised adhesion layer and anti-corrosion protection

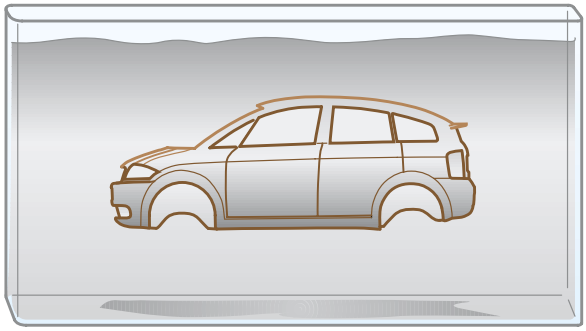

SSP239_067

Cataphoretic immersion paint primary coating (CIP primary coating)

After the phosphating process the body receives a cataphoretic primary coating, which provides an excellent protection against oxidisation.

Cataphoresis (movement of positively charged particles through a liquid) is an electrical process which is also known as electrophoresis (transport of electrically charged particles through an electrical current).

The body is fully immersed in a tank containing a paint-electrolyte solution.
It is connected to the negative terminal of a DC power supply. A series of anodes arranged around the tank form the positive terminal.

In the electrical field the positively charged paint particles deposit themselves through the field forces on the negatively charged body.

Advantages

- All outer surfaces, inner surfaces and cavities are coated.
- The thickness of the layer is uniform.

CIP primary coating produces a layer of paint up to 20 µm thick on the body.

Any non-adhering paint residues are removed in the following rinsing zones.
The last rinse is with fully demineralised water.

The body (free of water droplets) moves on to the drier. There the CIP primary coating hardens at a temperature of 180 °C.

The parts delivered from the factory are also already coated with a CIP primary coating.

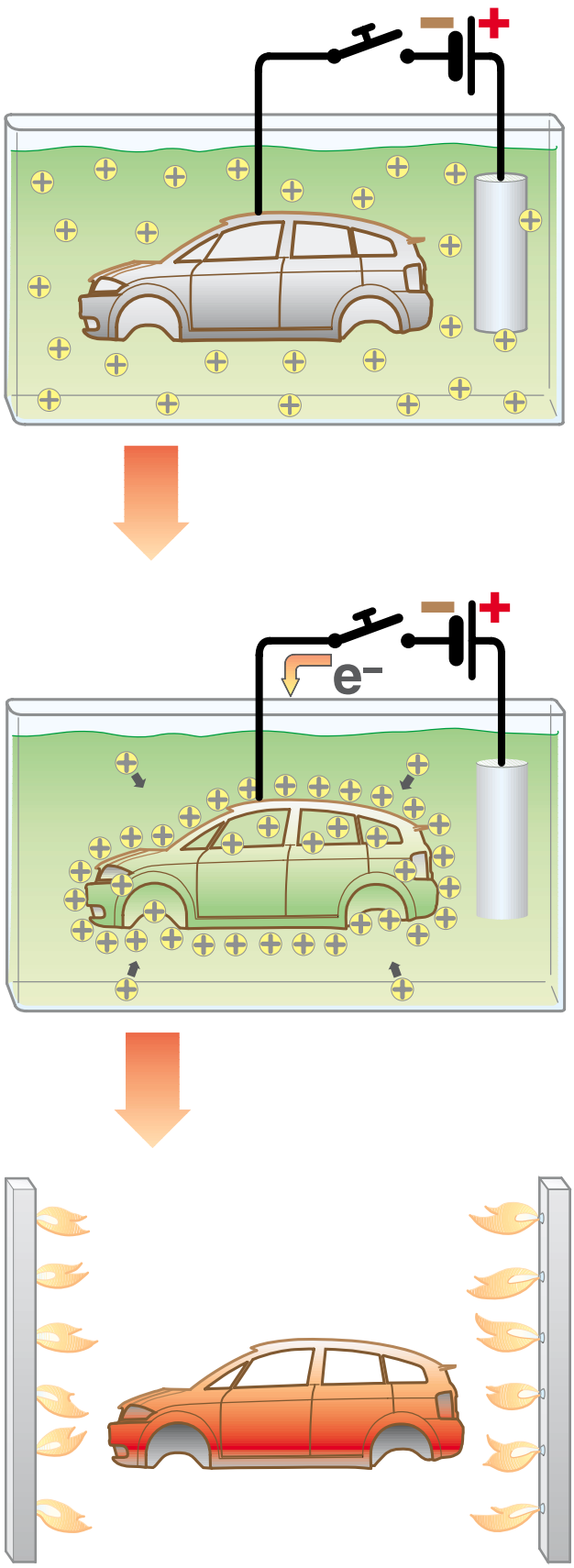

SSP239_068

ASF® in the Audi A8

Longitudinal member II

This cast joint joins the longitudinal members I and II with the bulkhead, floor assembly and the wheel housing shell.

Advantages of the aluminium cast metal parts

- fewer parts
- very precise
- good fit
- can be replaced without much effort

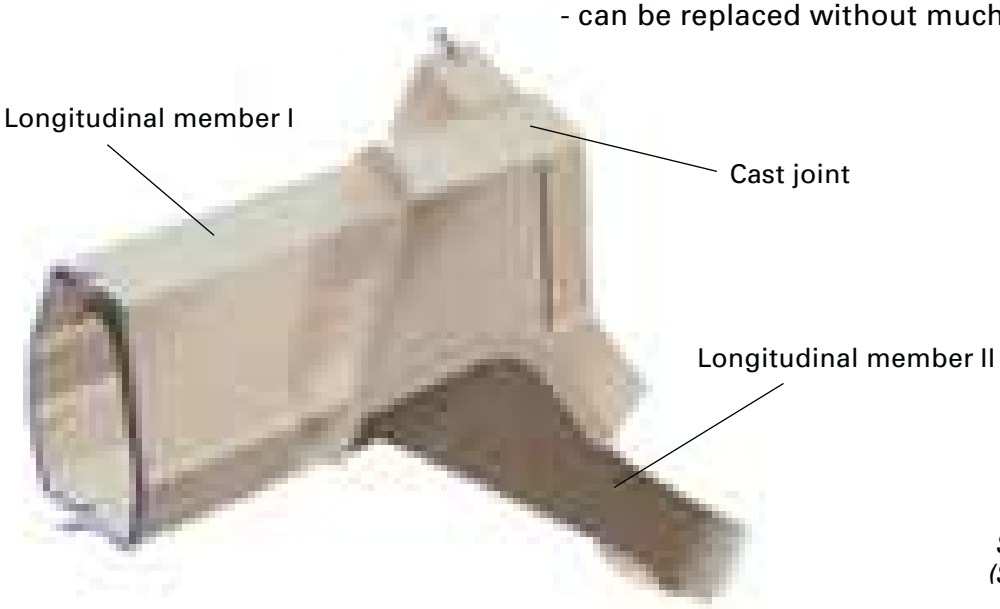

SSP239_074
(SSP160_020)

Front subframe support

This part provides a rigid, shaped connection between two completely different profile geometries and at the same time forms the very rigid subframe attachment, with ribbing and varied wall thicknesses. The threaded plate for the subframe bolts is supported without additional mountings or reinforcements.

The folding lines on an extruded profile during a crash can be reproduced (calculated in advance).

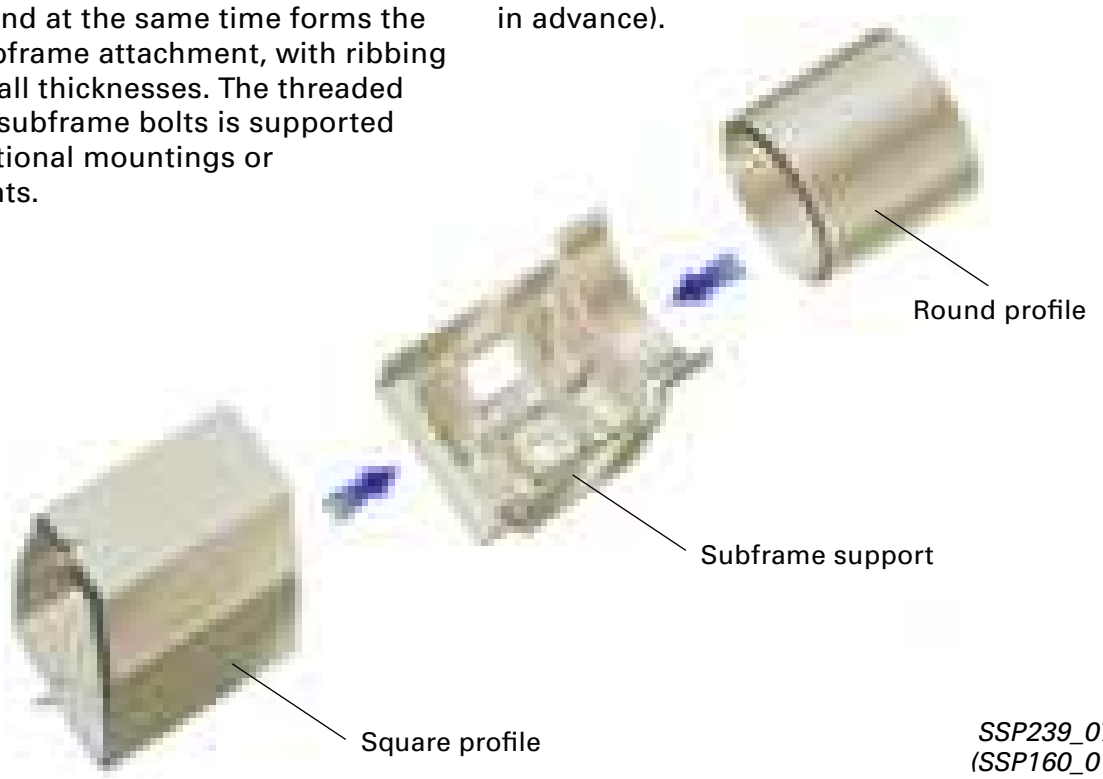

SSP239_075
(SSP160_018)

Front suspension strut holder

This part has a highly complex geometry, with many connections and a very high degree of rigidity. It forms the join between the longitudinal member, the bulkhead and the plenum chamber.

SSP239_076
(SSP160_019)

Door sill profile

A closed profile with wall thicknesses varied all around enables the largest possible cross-section for the available space and the best use of materials.
The integrated bridge acts as a wiring duct.

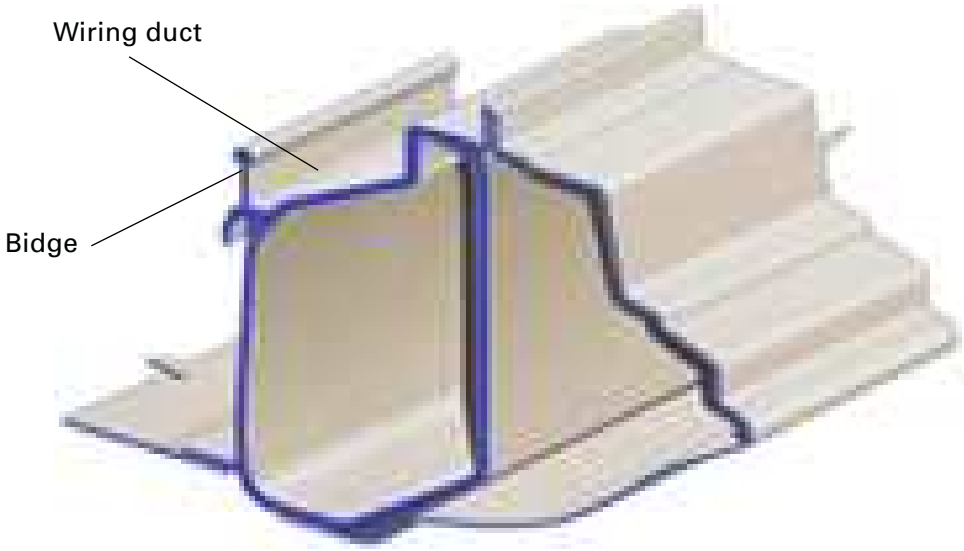

SSP239_077
(SSP160_021)

The lower A-pillar

Due to the high safety requirements the A-pillar is a multi-chamber profile.
In the lower area it connects the wheel housing, longitudinal member arm, door sill and floor assembly.

Most of the joins are MIG welded to produce an extremely rigid unit. This construction method also uses less individual parts.

A comparable body design could not be achieved with steel (weight).

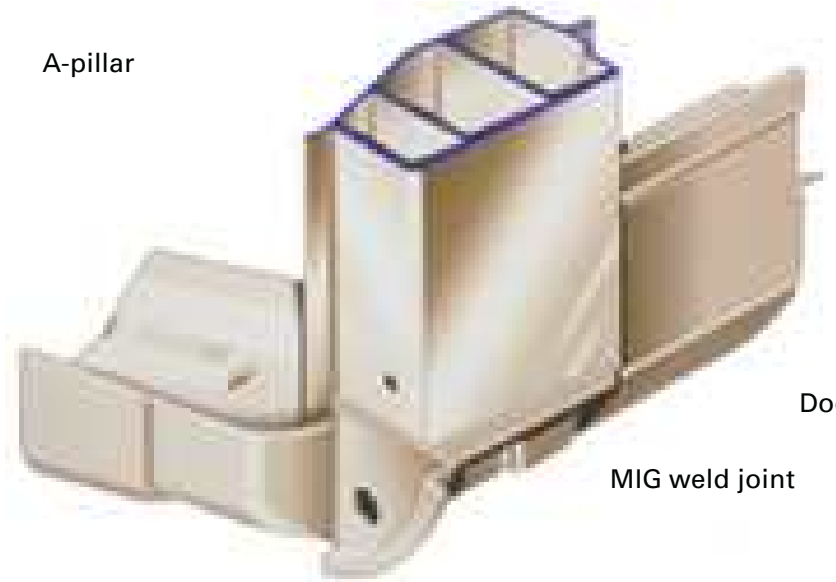

SSP239_078
(SSP160_023)

Windscreen cross-piece, scuttle

The windscreen cross-piece is a curved extruded profile that joins the two A-pillars.

It also serves as a support for the windscreen.

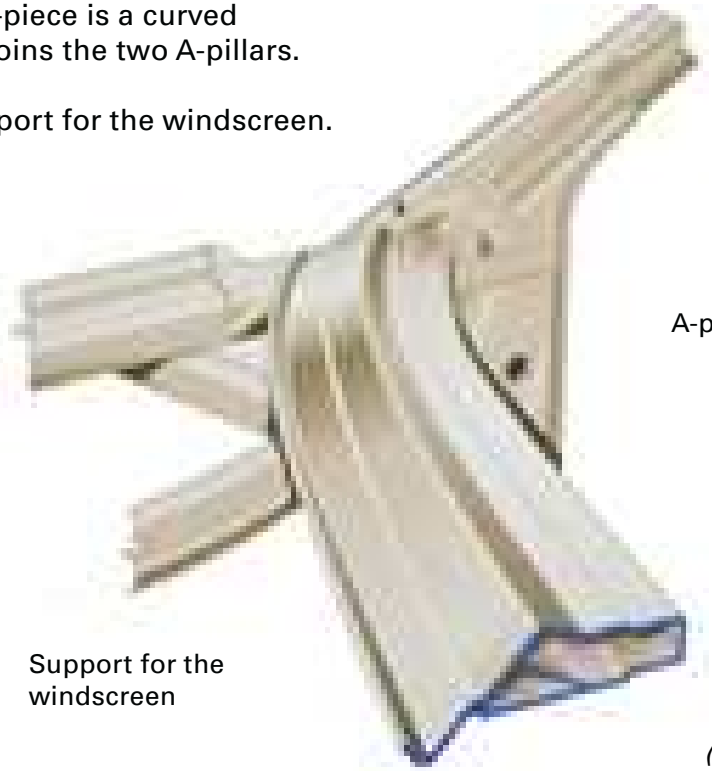

SSP239_079
(SSP160_022)

Adhesive bonding

Adhesive bonding techniques are used on the doors and lids of the A8. An epoxy adhesive is used, as is typical for doors and lids in steel constructions.
The modified epoxy adhesive is used on joining flanges in the area of the door cut-out, floor and suspension strut support.

An advantage of the “adhesive bonding and punch riveting” combination is that, in contrast to spot welding, this technique neither produces any smoke in the adhesively bonded area that would need extracting, nor can the adhesive burn.

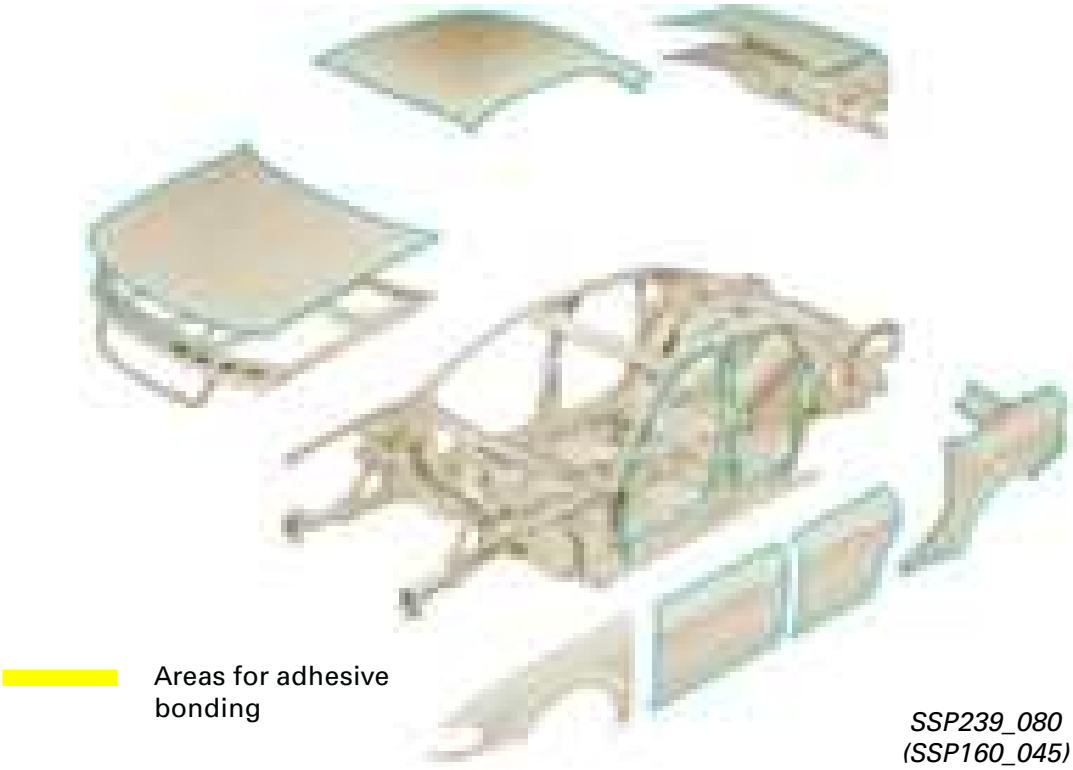

SSP239_080
(SSP160_045)

The raw body shell is completed by attaching the ancillary parts.

In order to achieve the required strength it is necessary to heat-treat the aluminium body.

To do this the body is heated for 30 minutes at a temperature of 210 °C, the so-called heat-hardening time.

SSP239_081
(SSP160_026)

Repair concept

The damaged longitudinal member is separated

The crashed longitudinal member displays optimum folding characteristics and is quick and easy to replace thanks to the bolted connections.

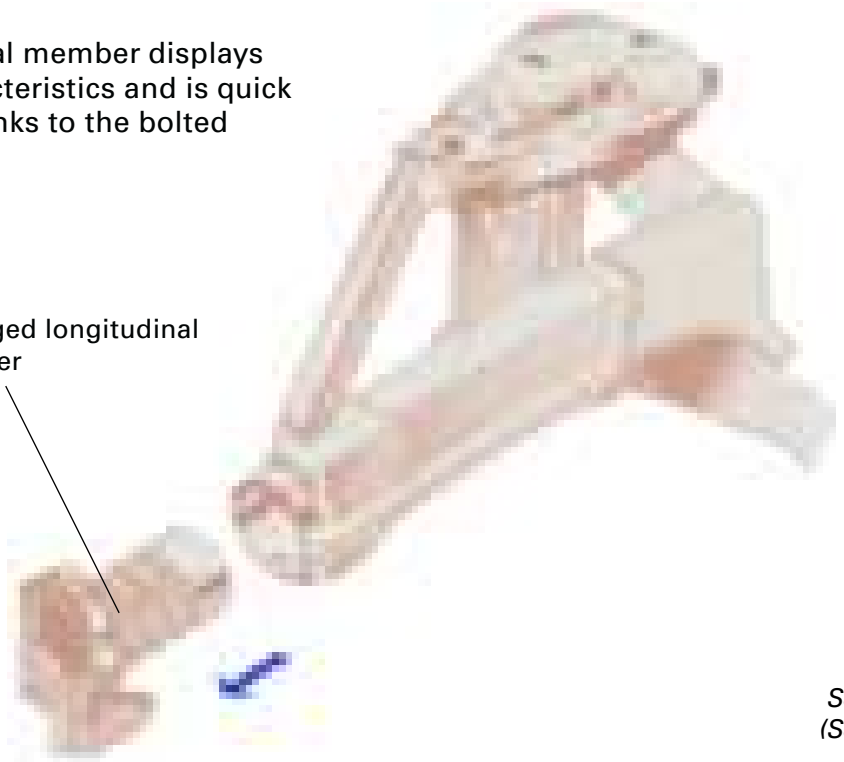

SSP239_082
(SSP160_043)

Bolted solution for longitudinal member

The front longitudinal member consists of three parts. Deformation element (tube), stable extruded profile with suspension strut holder and the bolted connection of the longitudinal member as a cast joint.

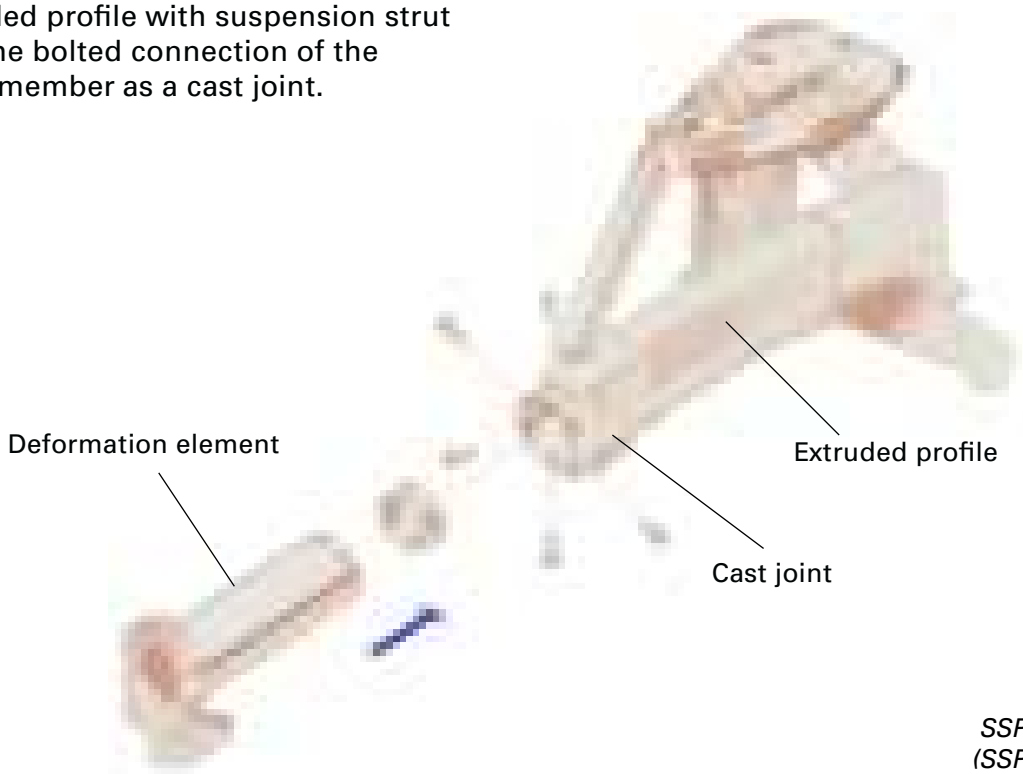

SSP239_085
(SSP160_044)

Door sill replacement

The defective door sill extruded profile is renewed as a section (as far as it is damaged).

The deformed extruded section is cut out, and the replacement part is welded in using socket welds.

The cast joints are not damaged, which enables economical repairs.

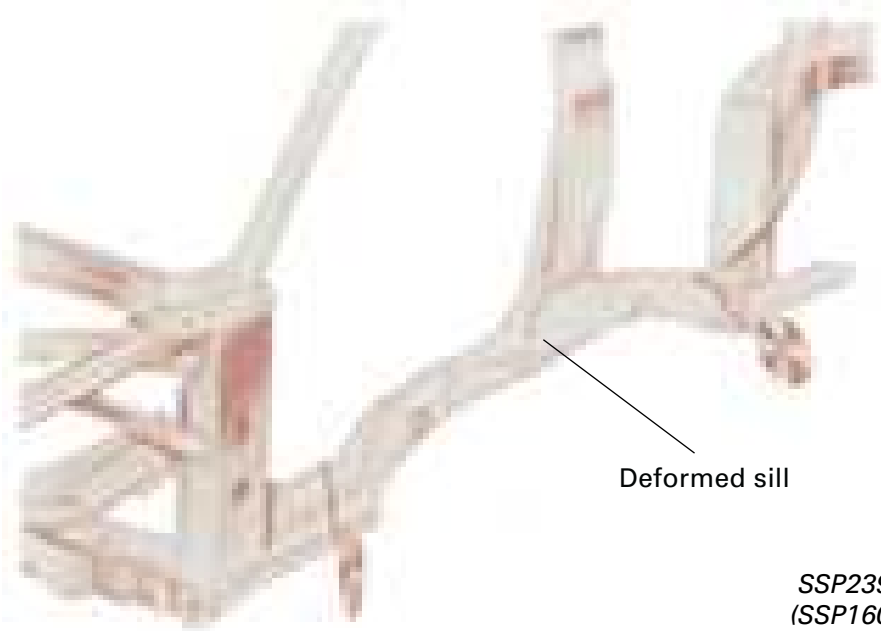

SSP239_083
(SSP160_046)

Door sill replacement

During a side impact the “cast joint and extruded section” construction responds in an exemplary manner.

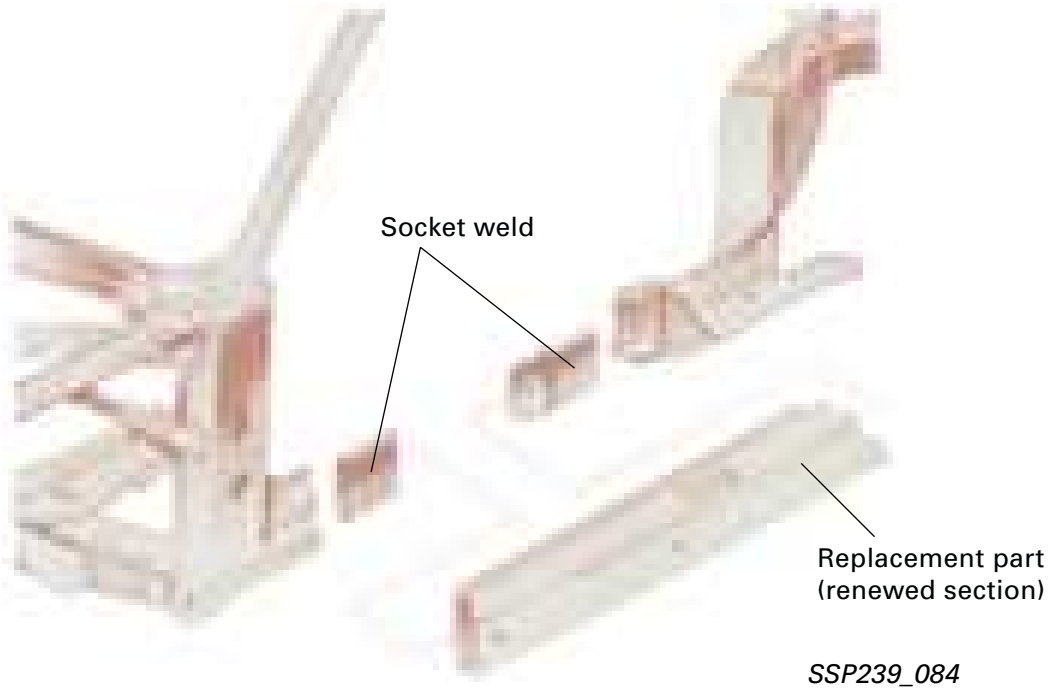

SSP239_084
(SSP160_047)

Anchoring set (4x)

The anchorages can be adjusted in all three dimensions to enable quick and easy securing of the vehicle.

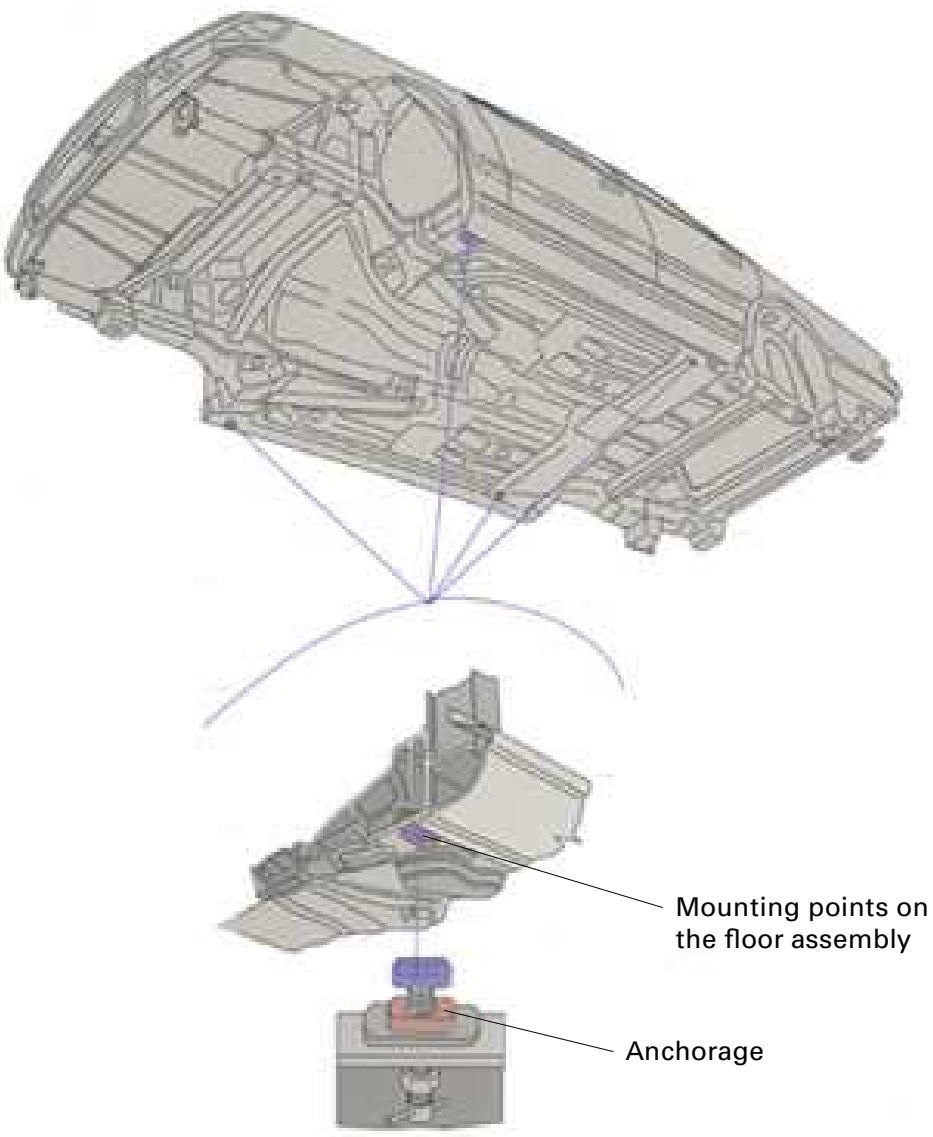

SSP239_087

Body repairs should currently only be performed on a Celette repair bench.

Attachment set (for bench-type straightening system)

The connection points are only shown on one side for ease of illustration.

The straightening set system MULTI-Z

These parts allow the seating of all vehicle-specific terminal sets. No special tools are required.
MULTI-Z is the latest tool available for diagnostics and repair technology.

Module member set

The module members are used to support straightening sets and can be used in all diagnostics and straightening work.

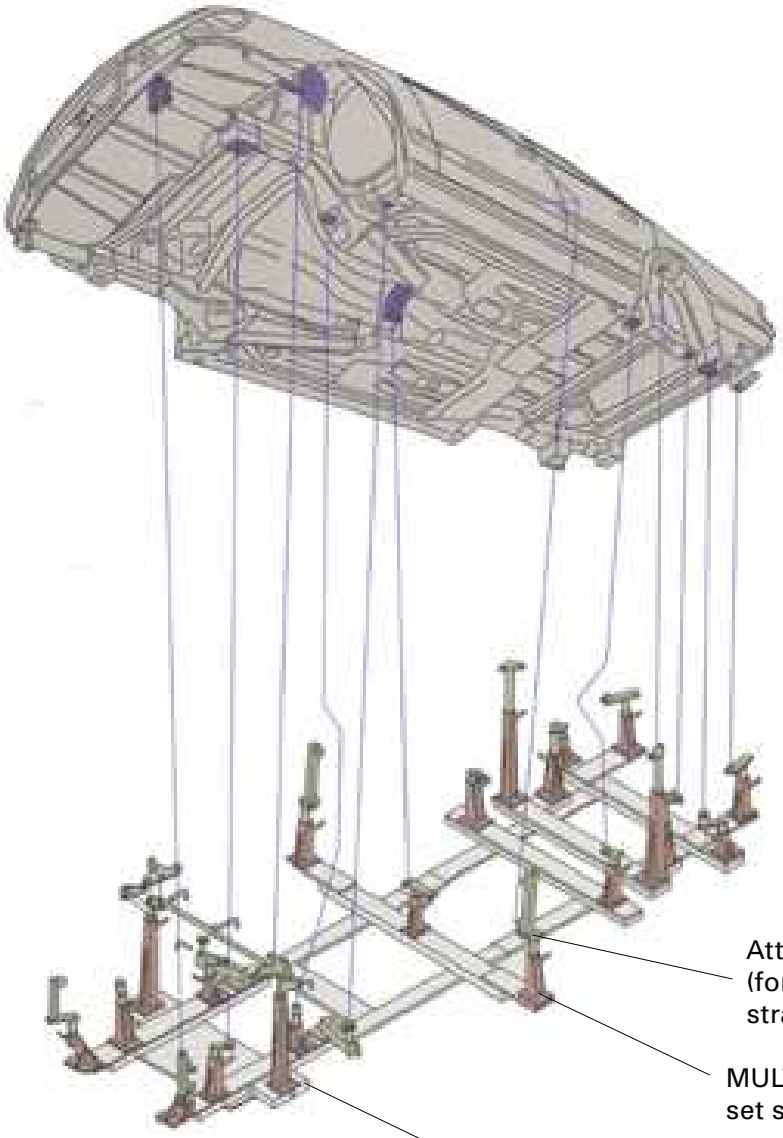

SSP239_088

Rubber and plastic parts

With rubber and plastic parts (particularly EPDM and chloroprene) and with adhesives the electrical conductivity and therefore the risk of contact corrosion is caused by the presence of carbon black filler.

For this reason it is vital that all elastomers, plastic parts and adhesives (raw body shell bonding, fine seam sealing and glass adhesives) have a specific volume resistance, and they must not be electrically conducting.

In addition to the material description, all of the affected parts in the drawing contain the following note in the text field in the material column:

“Electrical insulating properties”.

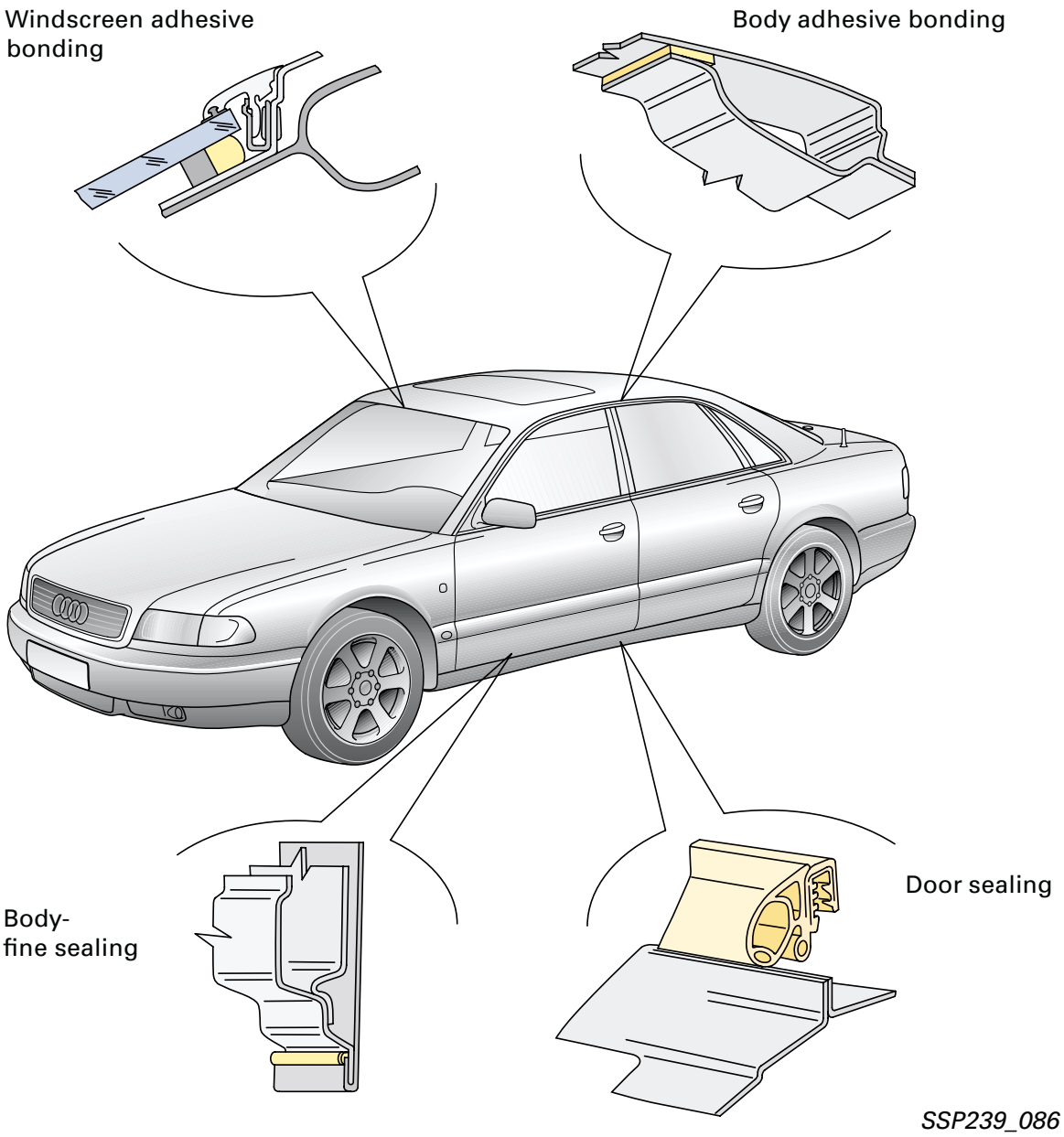

Notes

All rights reserved, including the right to make technical changes.
AUDI AG
Dept. I/VK-5
D-85045 Ingolstadt
Fax 0841/89-36367
040.2810.58.20
Technical status 02/00
Printed in Germany