MECHANICAL

ME(SOHC)

		Page
1.	General Description	2
2.	Compression	23
3.	Idle Speed	24
4.	Ignition Timing	25
5.	Intake Manifold Vacuum	26
6.	Engine Oil Pressure	27
7.	Fuel Pressure	28
8.	Valve Clearance	29
9.	Engine Assembly	33
10.	Engine Mounting	41
11.	Preparation for Overhaul	42
12.	V-belt	43
13.	Crankshaft Pulley	45
14.	Belt Cover	46
15.	Timing Belt Assembly	47
16.	Camshaft Sprocket	52
17.	Crankshaft Sprocket	54
18.	Valve Rocker Assembly	55
19.	Camshaft	57
20.	Cylinder Head Assembly	61
21.	Cylinder Block	69
22.	Engine Trouble in General	89
23.	Engine Noise	95

GETtheMANUALS.org

1. General Description

A: SPECIFICATIONS

Engine	Type			Horizontally opposed, liquid cooled, 4-cylinder, 4-stroke gasoline engine
	Valve arrangement			Belt driven, single over-head camshaft, 4-valve/cylinder
	Bore x Stroke		mm (in)	99.5 x 79.0 (3.917 x 3.110)
	Displacement		cm^3 (cu in)	2,457 (150)
	Compression ratio			10.0
	Compression pressure (at 200 — 300 rpm)		kPa (kgf/cm^2, psi)	1,079 — 1,275 (11.0 — 13.0, 156 — 185)
	Number of piston rings			Pressure ring: 2, Oil ring: 1
	Intake valve timing	Opening		1° BTDC
		Closing		51° ABDC
	Exhaust valve timing	Opening		50° BBDC
		Closing		6° ATDC
	Valve clearance	Intake	mm (in)	0.20±0.02 (0.0079±0.0008)
		Exhaust	mm (in)	0.25±0.02 (0.0098±0.0008)
	Idling speed [At neutral position on MT, or "P" or "N" position on AT]		rpm	MT: 650±100 (No load) AT: 700±100 (No load) 850±100 (A/C switch ON)
	Firing order			1 → 3 → 2 → 4
	Ignition timing		BTDC/rpm	MT: 10°±8°/650 AT: 15°±8°/700

NOTE:
STD: Standard I.D.: Inner Diameter O.D.: Outer Diameter US: Undersize OS: Oversize

Belt tensioner adjuster	Protrusion of adjuster rod			5.2 — 6.2 mm (0.205 — 0.244 in)
Belt tensioner	Spacer O.D.			17.955 — 17.975 mm (0.7069 — 0.7077 in)
	Tensioner bush I.D.			18.00 — 18.08 mm (0.7087 — 0.7118 in)
	Clearance between spacer and bush		STD	0.025 — 0.125 mm (0.0010 — 0.0049 in)
			Limit	0.175 mm (0.0069 in)
	Side clearance of spacer		STD	0.20 — 0.55 mm (0.0079 — 0.0217 in)
			Limit	0.81 mm (0.0319 in)
Valve rocker arm	Clearance between shaft and arm		STD	0.020 — 0.054 mm (0.0008 — 0.0021 in)
			Limit	0.10 mm (0.0039 in)
Camshaft	Bend limit			0.020 mm (0.0008 in)
	Thrust clearance		STD	0.030 — 0.090 mm (0.0012 — 0.0035 in)
			Limit	0.11 mm (0.0043 in)
	Cam lobe height	Intake	STD	39.485 — 39.585 mm (1.5545 — 1.5585 in)
			Limit	39.385 mm (1.5506 in)
		Exhaust	STD	39.257 — 39.357 mm (1.5455 — 1.5495 in)
			Limit	39.157 mm (1.5416 in)
	Camshaft journal O.D.			31.928 — 31.945 mm (1.2570 — 1.2577 in)
	Camshaft journal hole I.D.			32.000 — 32.018 mm (1.2598 — 1.2605 in)
	Oil clearance		STD	0.055 — 0.090 mm (0.0022 — 0.0035 in)
			Limit	0.10 mm (0.0039 in)

GETtheMANUALS.org

Cylinder head	Surface warpage limit			0.05 mm (0.0020 in)
	Surface grinding limit			0.1 mm (0.004 in)
	Standard height			98.3 mm (3.870 in)
Valve set	Refacing angle			90°
	Contacting width	Intake	STD	1.0 mm (0.039 in)
			Limit	1.7 mm (0.067 in)
		Exhaust	STD	1.4 mm (0.055 in)
			Limit	2.1 mm (0.083 in)
Valve guide	Inner diameter			6.000 — 6.012 mm (0.2362 — 0.2367 in)
	Protrusion above head		Intake	20.0 — 20.5 mm (0.787 — 0.807 in)
			Exhaust	16.5 — 17.0 mm (0.650 — 0.669 in)
Valve	Head edge thickness	Intake	STD	1.0 mm (0.039 in)
			Limit	0.6 mm (0.024 in)
		Exhaust	STD	1.2 mm (0.047 in)
			Limit	0.6 mm (0.024 in)
	Stem diameter		Intake	5.950 — 5.965 mm (0.2343 — 0.2348 in)
			Exhaust	5.945 — 5.960 mm(0.2341 — 0.2346 in)
	Stem oil clearance	STD	Intake	0.035 — 0.062 mm (0.0014 — 0.0024 in)
			Exhaust	0.040 — 0.067 mm (0.0016 — 0.0026 in)
		Limit	—	0.15 mm (0.0059 in)
	Overall length		Intake	120.6 mm (4.75 in)
			Exhaust	121.7 mm (4.79 in)
Valve spring	Free length			54.30 mm (2.1378 in)
	Squareness			2.5°, 2.4 mm (0.094 in)
	Tension/spring height			214.8 — 246.2 N (21.9 — 25.1 kgf, 48.3 — 55.3 lb)/ 45.0 mm (1.772 in) 526.6 — 581.6 N (53.7 — 59.3 kgf, 118.4 — 130.8 lb)/ 34.7 mm (1.366 in)
Cylinder block	Surface warpage limit (mating with cylinder head)			0.05 mm (0.0020 in)
	Surface grinding limit			0.1 mm (0.004 in)
	Cylinder bore	STD	A	99.505 — 99.515 mm (3.9175 — 3.9179 in)
			B	99.495 — 99.505 mm (3.9171 — 3.9175 in)
	Taper		STD	0.015 mm (0.0006 in)
			Limit	0.050 mm (0.0020 in)
	Out-of-roundness		STD	0.010 mm (0.0004 in)
			Limit	0.050 mm (0.0020 in)
	Piston clearance		STD	0.010 — 0.030 mm (0.0004 — 0.0012 in)
			Limit	0.050 mm (0.0020 in)
	Enlarging (boring) limit			0.5 mm (0.020 in)
Piston	Outer diameter	STD	A	99.485 — 99.495 mm (3.9167 — 3.9171 in)
			B	99.475 — 99.485 mm (3.9163 — 3.9167 in)
		0.25 mm (0.0098 in) OS		99.725 — 99.735 mm (3.9262 — 3.9266 in)
		0.50 mm (0.0197 in) OS		99.975 — 99.985 mm (3.9360 — 3.9364 in)
	Standard inner diameter of piston pin hole			23.000 — 23.006 mm (0.9055 — 0.9057 in)
Piston pin	Outer diameter			22.994 — 23.000 mm (0.9053 — 0.9055 in)
	Standard clearance between piston pin and hole in piston			0.004 — 0.008 mm (0.0002 — 0.0003 in)
	Degree of fit			Piston pin must be fitted into position with thumb at 20°C (68°F).

GETtheMANUALS.org

Piston ring	Piston ring gap	Top ring	STD	0.20 — 0.35 mm (0.0079 — 0.0138 in)
			Limit	1.0 mm (0.039 in)
		Second ring	STD	0.35 — 0.50 mm (0.0138 — 0.0197 in)
			Limit	1.0 mm (0.039 in)
		Oil ring	STD	0.20 — 0.70 mm (0.0079 — 0.0276 in)
			Limit	1.5 mm (0.059 in)
	Clearance between piston ring and piston ring groove	Top ring	STD	0.040 — 0.080 mm (0.0016 — 0.0031 in)
			Limit	0.15 mm (0.0059 in)
		Second ring	STD	0.030 — 0.070 mm (0.0012 — 0.0028 in)
			Limit	0.15 mm (0.0059 in)
Connecting rod	Bend twist per 100 mm (3.94 in) in length		Limit	0.10 mm (0.0039 in)
	Side clearance		STD	0.070 — 0.330 mm (0.0028 — 0.0130 in)
			Limit	0.4 mm (0.016 in)
Connecting rod bearing	Oil clearance		STD	0.020 — 0.046 mm (0.0008 — 0.0018 in)
			Limit	0.05 mm (0.0020 in)
	Thickness at center portion		STD	1.486 — 1.498 mm (0.0585 — 0.0590 in)
			0.03 mm (0.0012 in) US	1.504 — 1.512 mm (0.0592 — 0.0595 in)
			0.05 mm (0.0020 in) US	1.514 — 1.522 mm (0.0596 — 0.0599 in)
			0.25 mm (0.0098 in) US	1.614 — 1.622 mm (0.0635 — 0.0639 in)
Connecting rod bushing	Clearance between piston pin and bushing		STD	0 — 0.022 mm (0 — 0.0009 in)
			Limit	0.030 mm (0.0012 in)
Crankshaft	Bend limit			0.035 mm (0.0014 in)
	Crank pin and crank journal	Out-of -roundness		0.020 mm (0.0008 in) or less
		Grinding limit		0.250 mm (0.0098 in)
	Crank pin outer diameter		STD	51.984 — 52.000 mm (2.0466 — 2.0472 in)
			0.03 mm (0.0012 in) US	51.954 — 51.970 mm (2.0454 — 2.0461 in)
			0.05 mm (0.0020 in) US	51.934 — 51.950 mm (2.0446 — 2.0453 in)
			0.25 mm (0.0098 in) US	51.734 — 51.750 mm (2.0368 — 2.0374 in)
	Crank journal outer diameter	#1, #5, #3	STD	59.992 — 60.008 mm (2.3619 — 2.3625 in)
			0.03 mm (0.0012 in) US	59.962 — 59.978 mm (2.3607 — 2.3613 in)
			0.05 mm (0.0020 in) US	59.942 — 59.958 mm (2.3599 — 2.3605 in)
			0.25 mm (0.0098 in) US	59.742 — 59.758 mm (2.3520 — 2.3527 in)
		#2, #4	STD	59.992 — 60.008 mm (2.3619 — 2.3625 in)
			0.03 mm (0.0012 in) US	59.962 — 59.978 mm (2.3607 — 2.3613 in)
			0.05 mm (0.0020 in) US	59.942 — 59.958 mm (2.3599 — 2.3605 in)
			0.25 mm (0.0098 in) US	59.742 — 59.758 mm (2.3520 — 2.3527 in)
	Thrust clearance		STD	0.030 — 0.115 mm (0.0012 — 0.0045 in)
			Limit	0.25 mm (0.0098 in)
	Oil clearance		STD	0.010 — 0.030 mm (0.0004 — 0.0012 in)
			Limit	0.040 mm (0.0016 in)

GETtheMANUALS.org

Crankshaft bearing	Crankshaft bearing thickness	#1, #5	STD	1.998 — 2.011 mm (0.0787 — 0.0792 in)
			0.03 mm (0.0012 in) US	2.017 — 2.020 mm (0.0794 — 0.0795 in)
			0.05 mm (0.0020 in) US	2.027 — 2.030 mm (0.0798 — 0.0799 in)
			0.25 mm (0.0098 in) US	2.127 — 2.130 mm (0.0837 — 0.0839 in)
		#2, #3, #4	STD	2.000 — 2.013 mm (0.0787 — 0.0793 in)
			0.03 mm (0.0012 in) US	2.019 — 2.022 mm (0.0795 — 0.0796 in)
			0.05 mm (0.0020 in) US	2.029 — 2.032 mm (0.0799 — 0.0800 in)
			0.25 mm (0.0098 in) US	2.129 — 2.132 mm (0.0838 — 0.0839 in)

GETtheMANUALS.org

B: COMPONENT

1. TIMING BELT

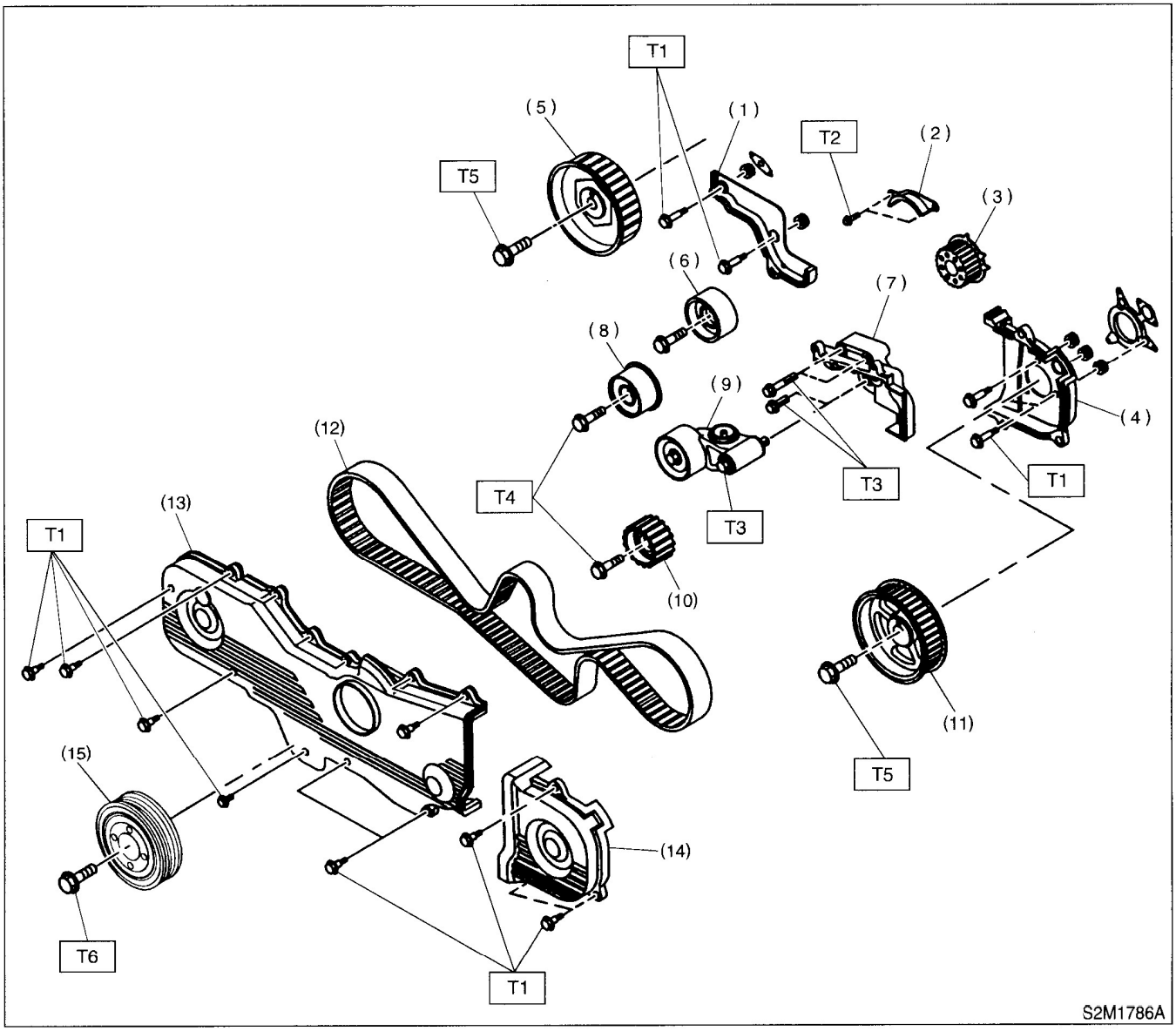

(1) Belt cover No. 2 (RH)
(2) Timing belt guide (MT vehicles only)
(3) Crankshaft sprocket
(4) Belt cover No. 2 (LH)
(5) Camshaft sprocket No. 1
(6) Belt idler (No. 1)
(7) Tensioner bracket
(8) Belt idler (No. 2)
(9) Automatic belt tension adjuster ASSY
(10) Belt idler No. 2
(11) Camshaft sprocket No. 2
(12) Timing belt
(13) Front belt cover
(14) Belt cover (LH)
(15) Crankshaft pulley

Tightening torque: N·m (kgf-m, ft-lb)
T1: 5 (0.5, 3.6)
T2: 9.8 (1.0, 7.2)
T3: 25 (2.5, 18.1)
T4: 39 (4.0, 28.9)
T5: 78 (8.0, 57.9)
T6: <Ref. to ME(SOHC)-45, INSTALLATION, Crankshaft Pulley.>

GETtheMANUALS.org

2. CYLINDER HEAD AND CAMSHAFT

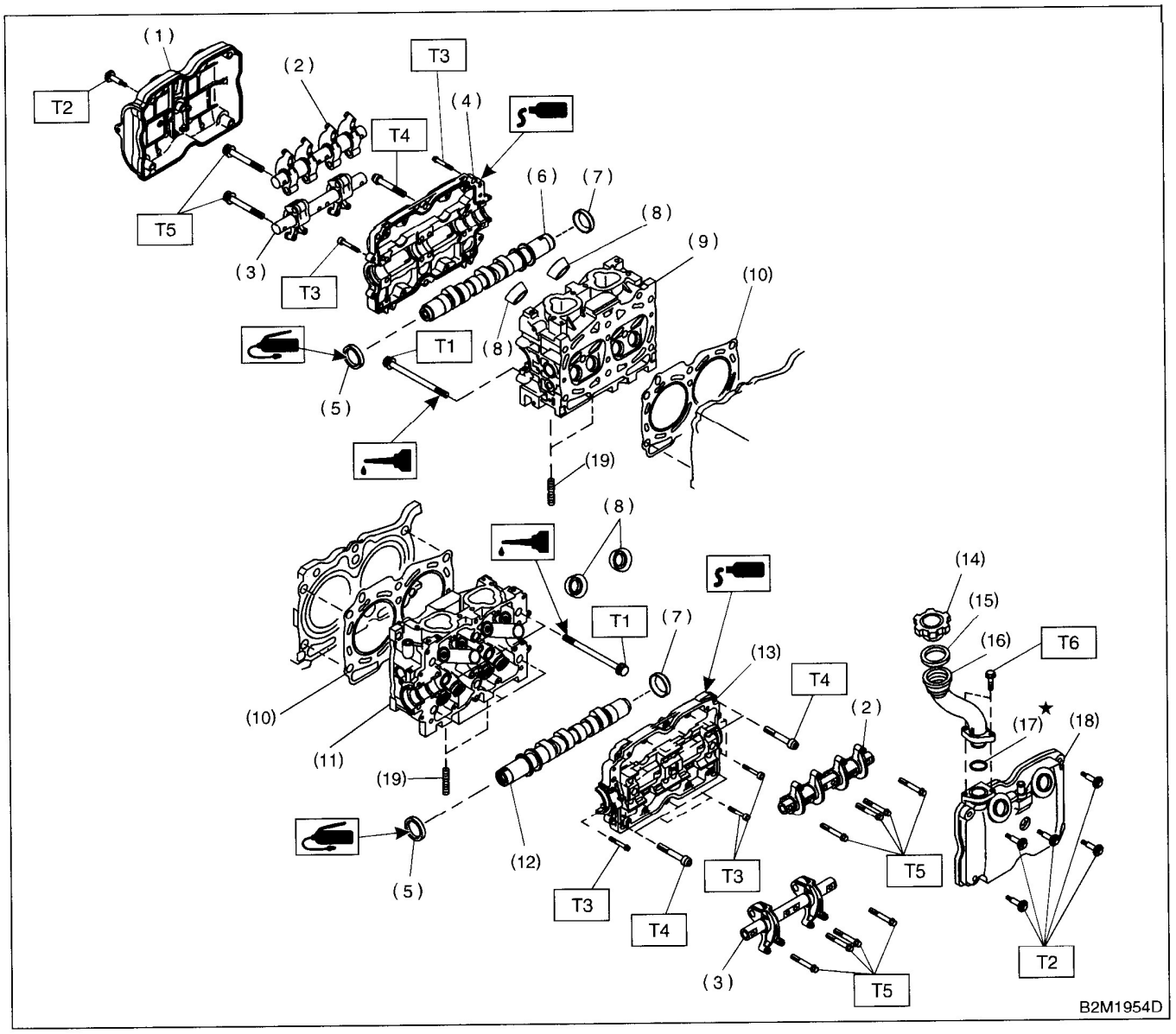

(1) Rocker cover (RH)
(2) Intake valve rocker ASSY
(3) Exhaust valve rocker ASSY
(4) Camshaft cap (RH)
(5) Oil seal
(6) Camshaft (RH)
(7) Plug
(8) Spark plug pipe gasket
(9) Cylinder head (RH)
(10) Cylinder head gasket
(11) Cylinder head (LH)
(12) Camshaft (LH)
(13) Camshaft cap (LH)
(14) Oil filler cap
(15) Gasket
(16) Oil filler pipe
(17) O-ring
(18) Rocker cover (LH)
(19) Stud bolt

Tightening torque: N·m (kgf-m, ft-lb)

T1: ***<Ref. to ME(SOHC)-61, INSTALLATION, Cylinder Head Assembly.>***
T2: ***5 (0.5, 3.6)***
T3: ***10 (1.0, 7.2)***
T4: ***18 (1.8, 13.0)***
T5: ***25 (2.5, 18.1)***
T6: ***6.4 (0.65, 4.7)***

GETtheMANUALS.org

3. VALVE ROCKER ASSEMBLY

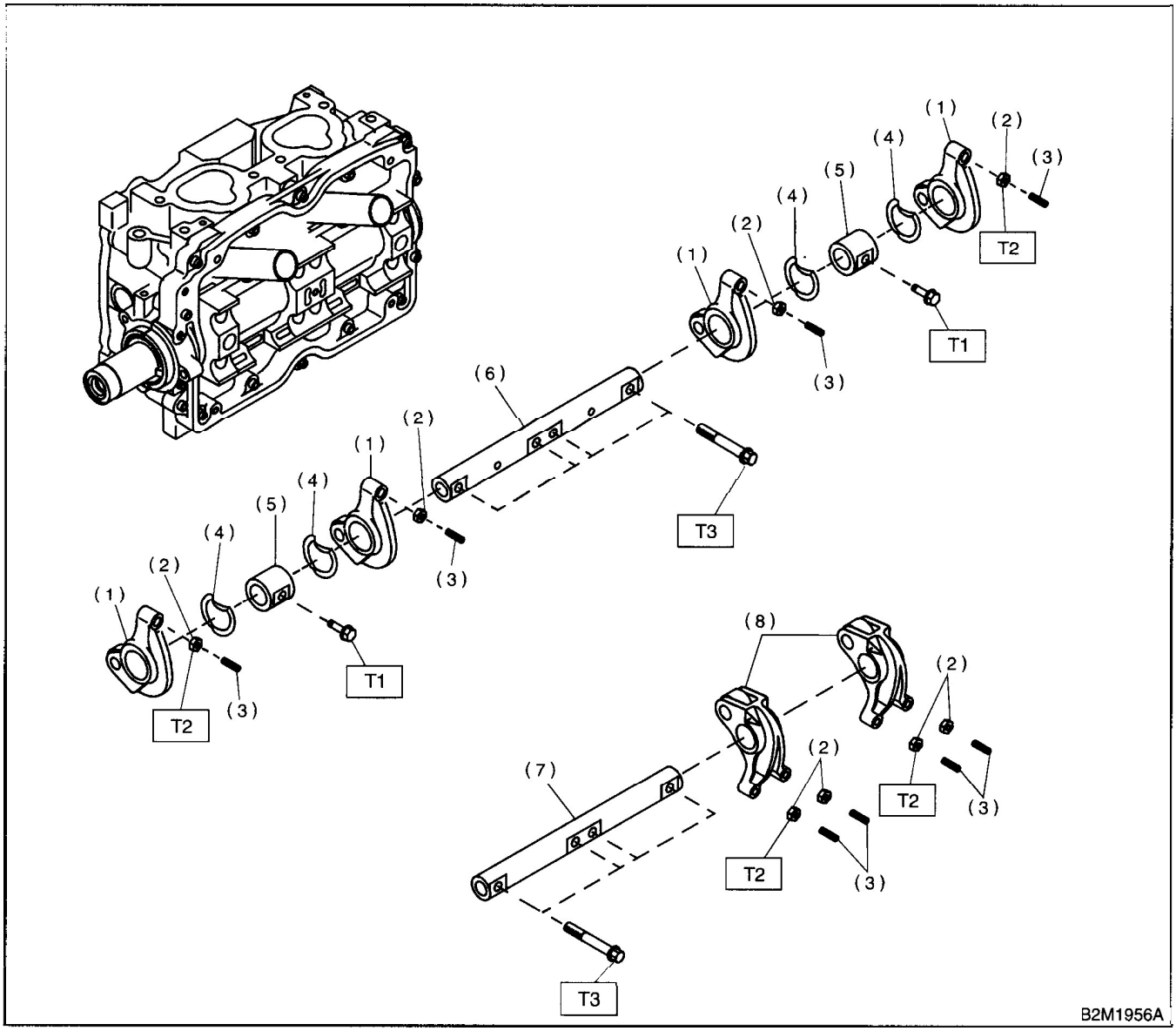

(1) Intake valve rocker arm
(2) Valve rocker nut
(3) Valve rocker adjust screw
(4) Spring
(5) Rocker shaft support
(6) Intake rocker shaft
(7) Exhaust rocker shaft
(8) Exhaust valve rocker arm

Tightening torque: N·m (kgf-m, ft-lb)
T1: 5 (0.5, 3.6)
T2: 10 (1.0, 7.2)
T3: 25 (2.5, 18.1)

GETtheMANUALS.org

4. CYLINDER HEAD AND VALVE ASSEMBLY

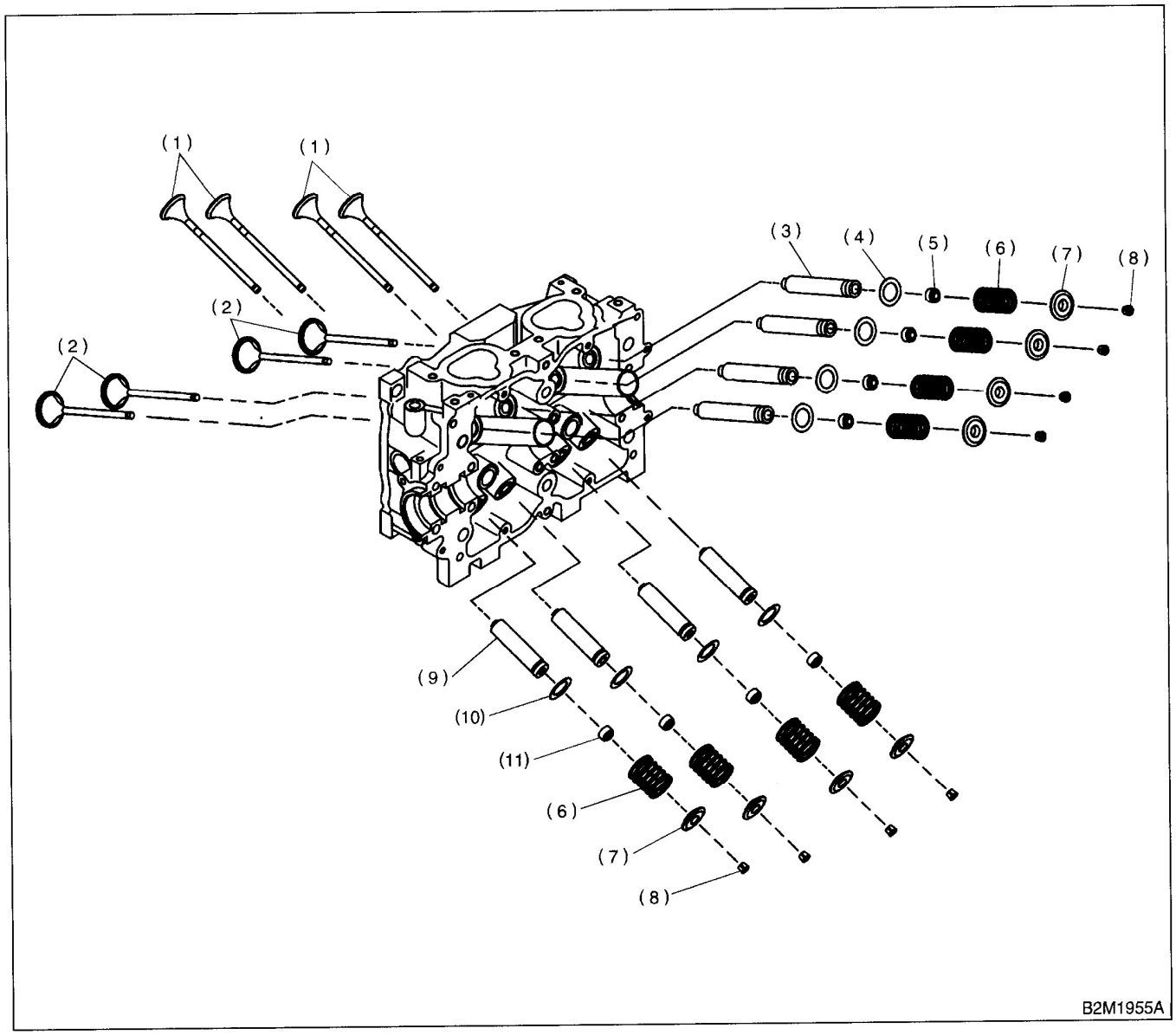

(1) Exhaust valve
(2) Intake valve
(3) Intake valve guide
(4) Intake valve spring seat
(5) Intake valve oil seal
(6) Valve spring
(7) Retainer
(8) Retainer key
(9) Exhaust valve guide
(10) Exhaust valve spring seat
(11) Exhaust valve oil seal

GETtheMANUALS.org

5. CYLINDER BLOCK

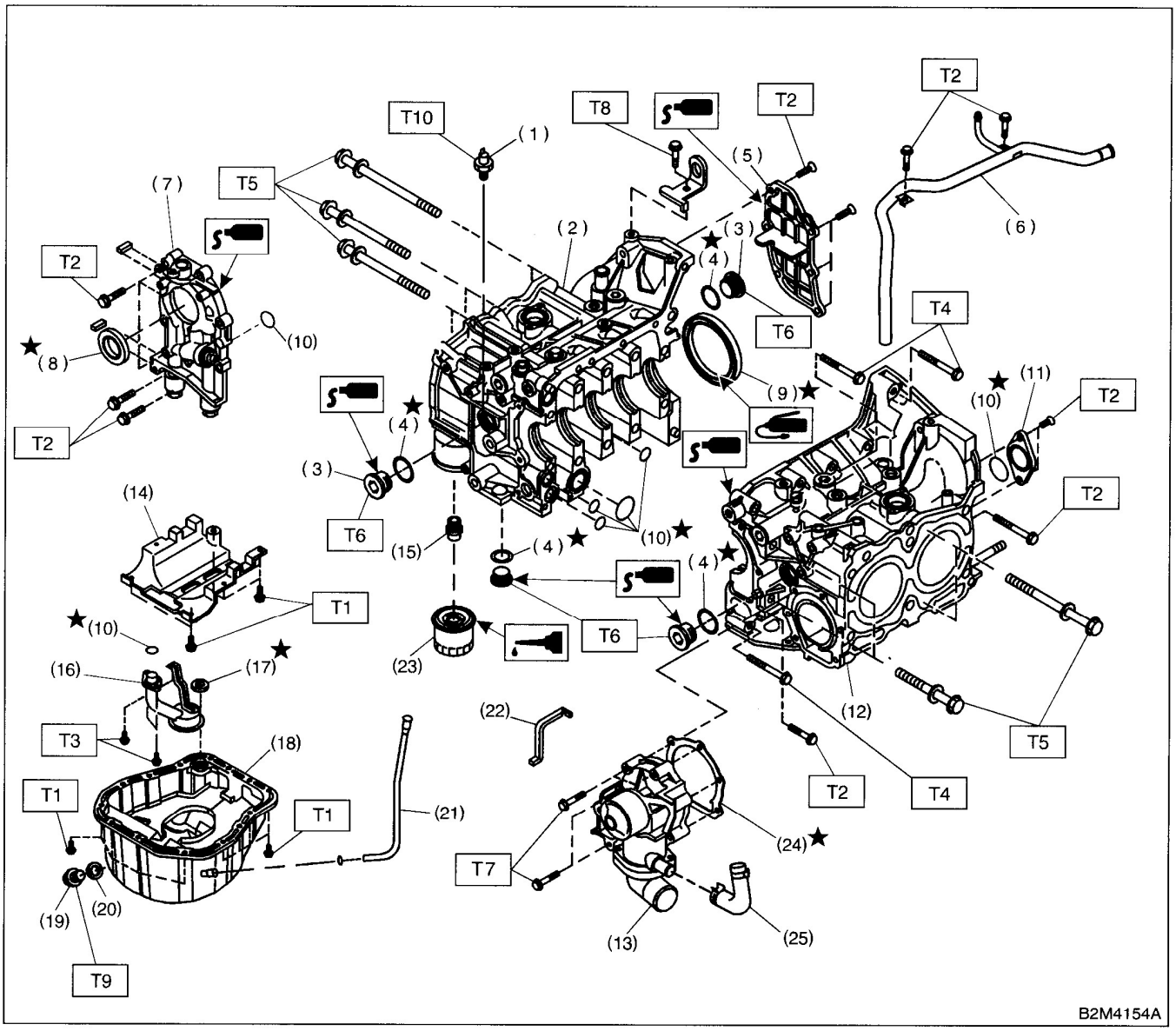

(1) Oil pressure switch
(2) Cylinder block (RH)
(3) Service hole plug
(4) Gasket
(5) Oil separator cover
(6) Water by-pass pipe
(7) Oil pump
(8) Front oil seal
(9) Rear oil seal
(10) O-ring
(11) Service hole cover
(12) Cylinder block (LH)
(13) Water pump
(14) Baffle plate
(15) Oil filter connector
(16) Oil strainer
(17) Gasket
(18) Oil pan
(19) Drain plug
(20) Metal gasket
(21) Oil level gauge guide
(22) Water pump sealing
(23) Oil filter
(24) Gasket
(25) Water pump hose

Tightening torque: N·m (kgf-m, ft-lb)
T1: 5 (0.5, 3.6)
T2: 6.4 (0.65, 4.7)
T3: 10 (1.0, 7)
T4: 25 (2.5, 18.1)
T5: 47 (4.8, 34.7)
T6: 69 (7.0, 50.6)
T7: First 12 (1.2, 8.7)
Second 12 (1.2, 8.7)
T8: 16 (1.6, 11.6)
T9: 44 (4.5, 33)
T10: 25 (2.5, 18.1)

GETtheMANUALS.org

GETtheMANUALS.org

6. CRANKSHAFT AND PISTON

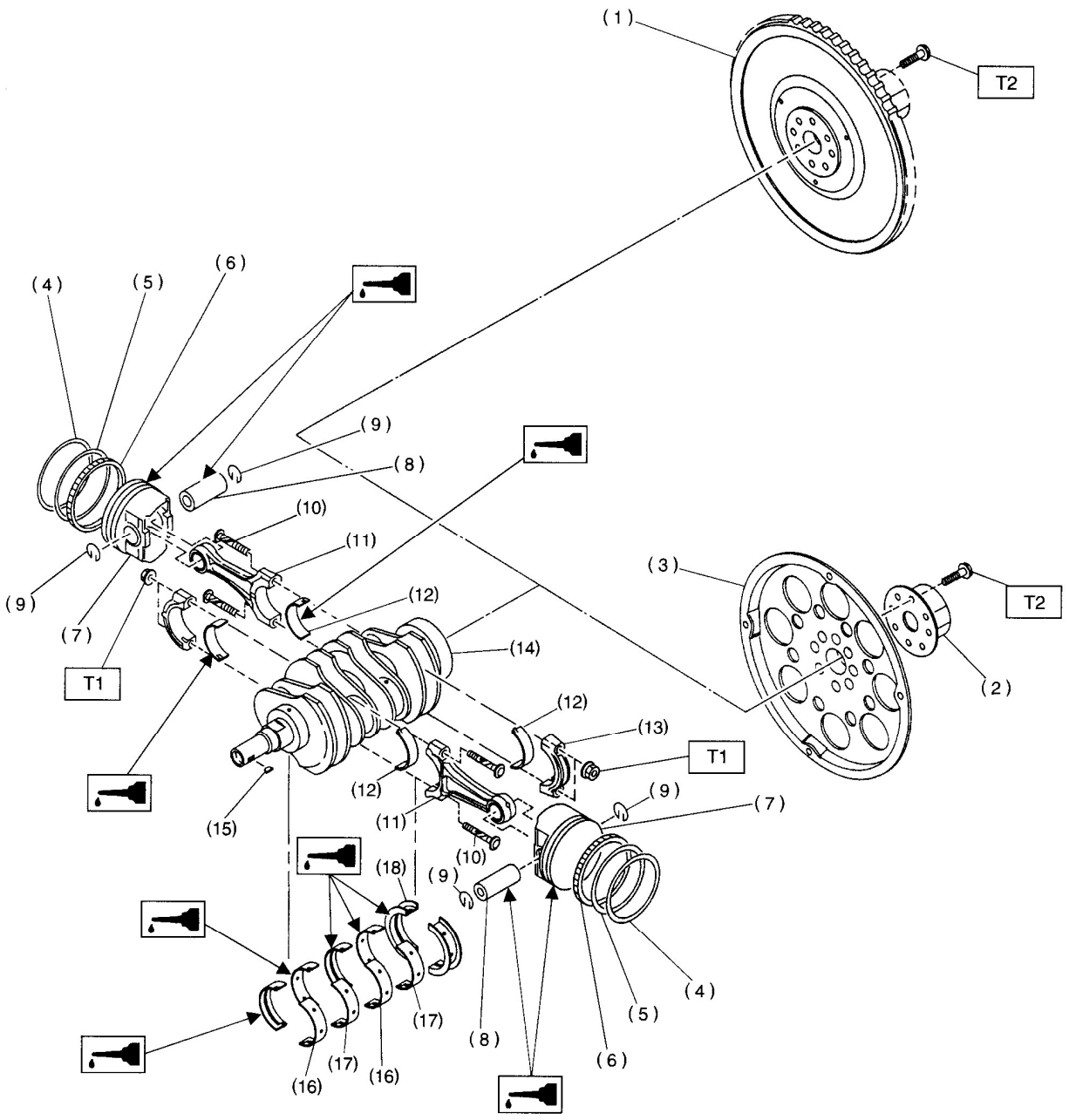

B2M3429A

GETtheMANUALS.org

(1) Flywheel (MT)
(2) Reinforcement (AT)
(3) Drive plate (AT)
(4) Top ring
(5) Second ring
(6) Oil ring
(7) Piston
(8) Piston pin
(9) Circlip
(10) Connecting rod bolt
(11) Connecting rod
(12) Connecting rod bearing
(13) Connecting rod cap
(14) Crankshaft
(15) Woodruff key
(16) Crankshaft bearing #1, #3
(17) Crankshaft bearing #2, #4
(18) Crankshaft bearing #5

Tightening torque: N·m (kgf-m, ft-lb)
T1: 44.6 (4.55, 32.9)
T2: 72 (7.3, 52.8)

GETtheMANUALS.org

7. ENGINE MOUNTING

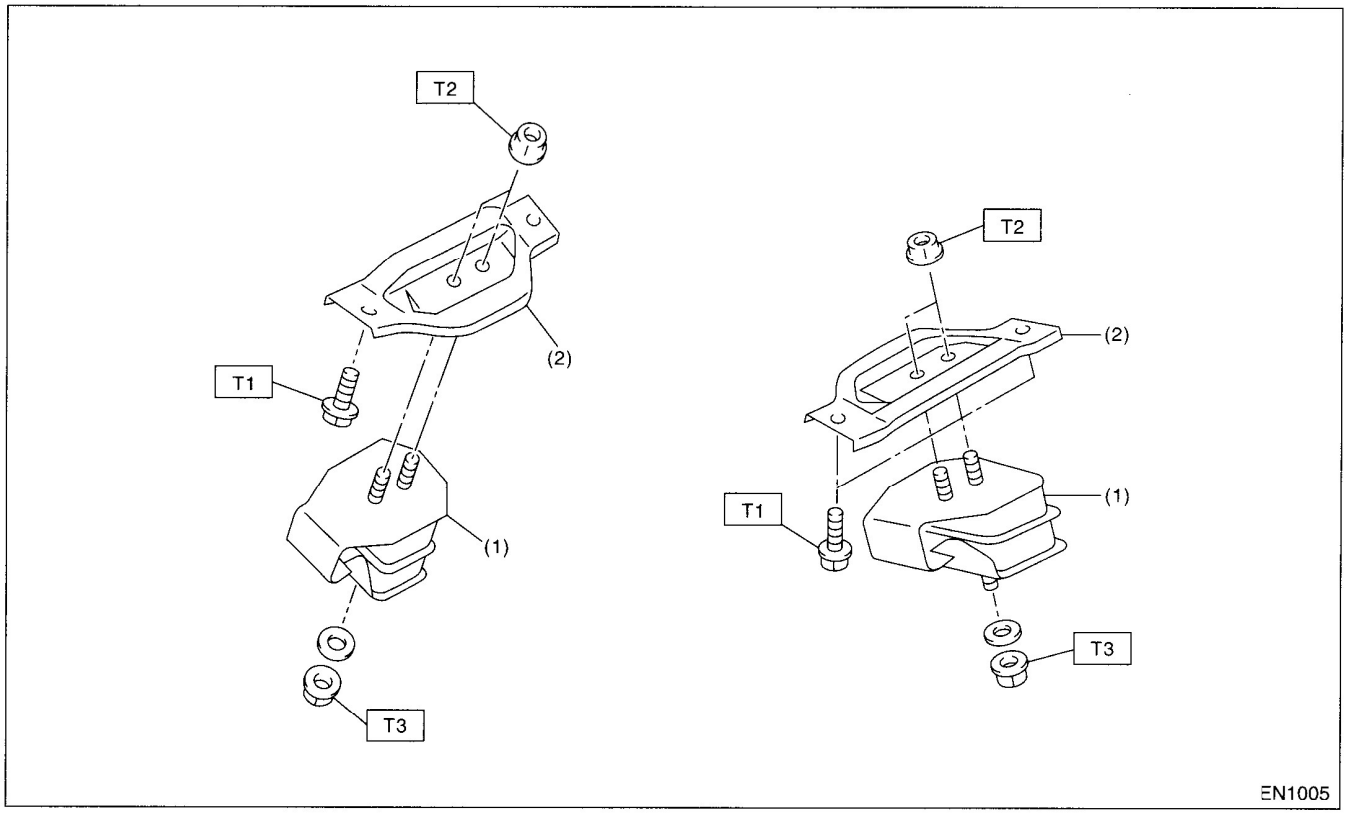

(1) Front cushion rubber
(2) Front engine mounting bracket

Tightening torque: N·m (kgf-m, ft-lb)
T1: 35 (3.6, 25.8)
T2: 42 (4.3, 31.0)
T3: 85 (8.7, 63)

C: CAUTION

- Wear working clothing, including a cap, protective goggles, and protective shoes during operation.
- Remove contamination including dirt and corrosion before removal, installation or disassembly.
- Keep the disassembled parts in order and protect them from dust or dirt.
- Before removal, installation or disassembly, be sure to clarify the failure. Avoid unnecessary removal, installation, disassembly, and replacement.
- Be careful not to burn your hands, because each part in the vehicle is hot after running.
- Be sure to tighten fasteners including bolts and nuts to the specified torque.
- Place shop jacks or safety stands at the specified points.
- Before disconnecting electrical connectors of sensors or units, be sure to disconnect the negative terminal from battery.
- All parts should be thoroughly cleaned, paying special attention to the engine oil passages, pistons and bearings.
- Rotating parts and sliding parts such as piston, bearing and gear should be coated with oil prior to assembly.
- Be careful not to let oil, grease or coolant contact the timing belt, clutch disc and flywheel.
- All removed parts, if to be reused, should be reinstalled in the original positions and directions.
- Bolts, nuts and washers should be replaced with new ones as required.
- Even if necessary inspections have been made in advance, proceed with assembly work while making rechecks.
- Remove or install the engine in an area where chain hoists, lifting devices, etc. are available for ready use.
- Be sure not to damage coated surfaces of body panels with tools or stain seats and windows with coolant or oil. Place a cover over fenders, as required, for protection.

GETtheMANUALS.org

• Prior to starting work, prepare the following: Service tools, clean cloth, containers to catch coolant and oil, wire ropes, chain hoist, transmission jacks, etc.

• Lift-up or lower the vehicle when necessary. Make sure to support the correct positions.

D: PREPARATION TOOL

1. SPECIAL TOOLS

ILLUSTRATION	TOOL NUMBER	DESCRIPTION	REMARKS
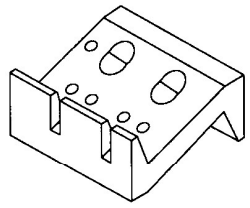 B2M3850	498267800	CYLINDER HEAD TABLE	• Used for replacing valve guides. • Used for removing and installing valve springs.
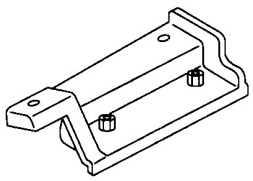 B2M3851	498457000	ENGINE STAND ADAPTER RH	Used with ENGINE STAND (499817000).
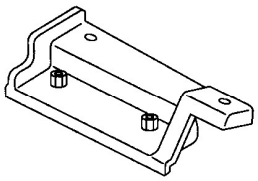 B2M3852	498457100	ENGINE STAND ADAPTER LH	Used with ENGINE STAND (499817000).
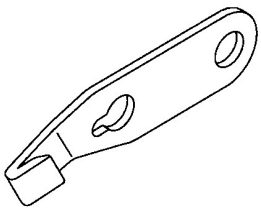 B2M3853	498497100	CRANKSHAFT STOPPER	Used for stopping rotation of flywheel when loosening and tightening crankshaft pulley bolt, etc.

GETtheMANUALS.org

ILLUSTRATION	TOOL NUMBER	DESCRIPTION	REMARKS
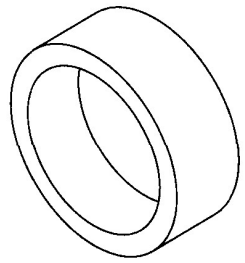 B2M3854	498747300	PISTON GUIDE	Used for installing piston in cylinder for 2500 cc engine.
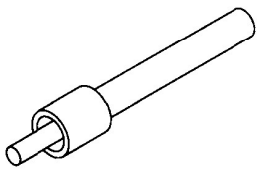 B2M3855	498857100	VALVE OIL SEAL GUIDE	Used for press-fitting of intake and exhaust valve guide oil seals.
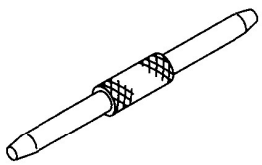 B2M3856	499017100	PISTON PIN GUIDE	Used for installing piston pin, piston and connecting rod.
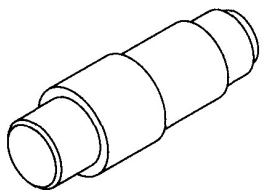 B2M3857	499037100	CONNECTING ROD BUSHING REMOVER & INSTALLER	Used for removing and installing connecting rod bushing.

GETtheMANUALS.org

ILLUSTRATION	TOOL NUMBER	DESCRIPTION	REMARKS
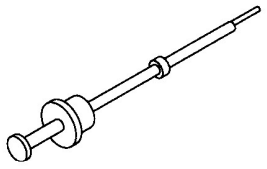 B2M3858	499097700	PISTON PIN REMOVER ASSY	Used for removing piston pin.
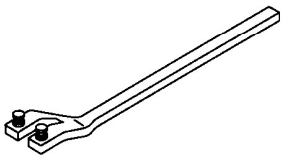 B2M3859	499207100	CAMSHAFT SPROCKET WRENCH	Used for removing and installing camshaft sprocket. (LH side)
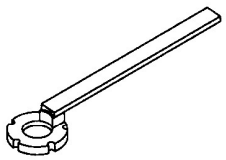 B2M4158	499207400	CAMSHAFT SPROCKET WRENCH	Used for removing and installing camshaft sprocket. (RH side)
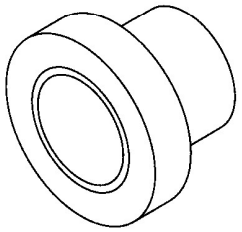 B2M3860	499587700	CAMSHAFT OIL SEAL INSTALLER	Used for installing cylinder head plug.

GETtheMANUALS.org

ILLUSTRATION	TOOL NUMBER	DESCRIPTION	REMARKS
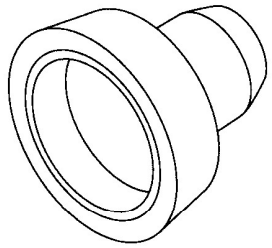 B2M3861	499587200	CRANKSHAFT OIL SEAL INSTALLER	• Used for installing crankshaft oil seal. • Used with CRANKSHAFT OIL SEAL GUIDE (499597100).
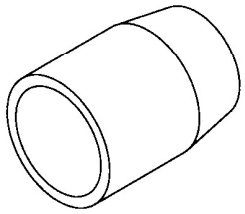 B2M3862	499597000	OIL SEAL GUIDE	• Used for installing camshaft oil seal. • Used with CAMSHAFT OIL SEAL INSTALLER (499587100).
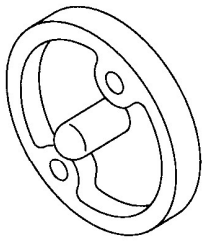 B2M3863	499597100	CRANKSHAFT OIL SEAL GUIDE	• Used for installing crankshaft oil seal. • Used with CRANKSHAFT OIL SEAL INSTALLER (499587200).
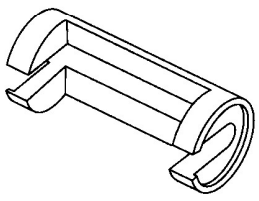 B2M3864	499718000	VALVE SPRING REMOVER	Used for removing and installing valve spring.

GETtheMANUALS.org

ILLUSTRATION	TOOL NUMBER	DESCRIPTION	REMARKS
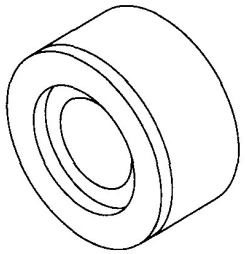 B2M3865	499767700 (Intake side) 499767800 (Exhaust side)	VALVE GUIDE ADJUSTER	Used for installing valve guides.
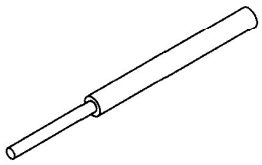 B2M3867	499767200	VALVE GUIDE REMOVER	Used for removing valve guides.
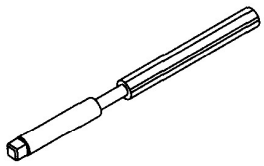 B2M3868	499767400	VALVE GUIDE REAMER	Used for reaming valve guides.
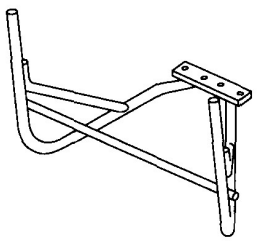 B2M3869	499817100	ENGINE STAND	• Stand used for engine disassembly and assembly. • Used with ENGINE STAND ADAPTER RH (498457000) & LH (498457100).

GETtheMANUALS.org

ILLUSTRATION	TOOL NUMBER	DESCRIPTION	REMARKS
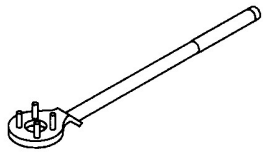 B2M3870	499977100	CRANK PULLEY WRENCH	Used for stopping rotation of crankshaft pulley when loosening and tightening crankshaft pulley bolts.
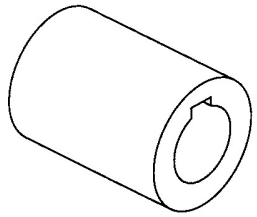 B2M3871	499987500	CRANKSHAFT SOCKET	Used for rotating crankshaft.
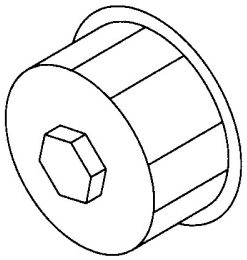 B2M3872	498547000	OIL FILTER WRENCH	Used for removing and installing oil filter.
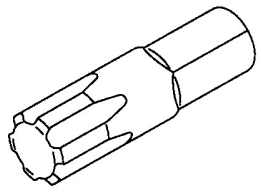 B2M3873	499497000	TORX PLUS	Used for removing and installing camshaft cap.

GETtheMANUALS.org

ILLUSTRATION	TOOL NUMBER	DESCRIPTION	REMARKS
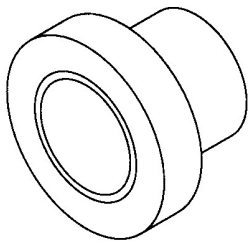 B2M3874	499587500	OIL SEAL INSTALLER	Used for installing front camshaft oil seal.
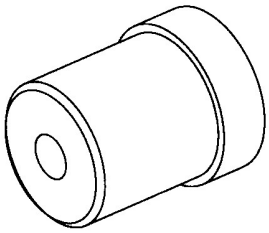 B2M3875	499587100	OIL SEAL INSTALLER	Used for installing oil pump oil seal.
 B2M2043	498277200	STOPPER SET	Used for installing automatic transmission assembly to engine.
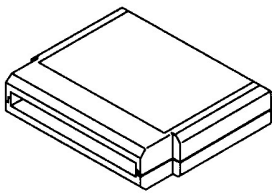 B2M3876	24082AA150 (Newly adopted tool)	CARTRIDGE	Troubleshooting for electrical systems.

GETtheMANUALS.org

ILLUSTRATION	TOOL NUMBER	DESCRIPTION	REMARKS
 B2M3877	22771AA030	SELECT MONITOR KIT	Troubleshooting for electrical systems. • English: 22771AA030 (Without printer) • German: 22771AA070 (Without printer) • French: 22771AA080 (Without printer) • Spanish: 22771AA090 (Without printer)

2. GENERAL PURPOSE TOOLS

TOOL NAME	REMARKS
Compression Gauge	Used for measuring compression.
Tachometer (Secondary pick-up type)	Used for measuring idle speed.
Timing Light	Used for measuring ignition timing.

E: PROCEDURE

It is possible to conduct the following service procedures with engine on the vehicle, however, the procedures described in this section are based on the condition that the engine is removed from the vehicle.

- V-belt
- Timing Belt
- Valve Rocker Assembly
- Camshaft
- Cylinder Head

GETtheMANUALS.org

2. Compression

A: INSPECTION

CAUTION:
After warming-up, engine becomes very hot. Be careful not to burn yourself during measurement.

1) After warming-up the engine, turn the ignition switch to OFF.
2) Make sure that the battery is fully charged.
3) Release fuel pressure. <Ref. to FU(SOHC)-50, RELEASING OF FUEL PRESSURE, OPERATION, Fuel.>
4) Remove all the spark plugs. <Ref. to IG(SOHC)-4, REMOVAL, Spark Plug.>
5) Fully open the throttle valve.
6) Check the starter motor for satisfactory performance and operation.
7) Hold the compression gauge tight against the spark plug hole.

CAUTION:
When using a screw-in type compression gauge, the screw (put into cylinder head spark plug hole) should be less than 18 mm (0.71 in) long.

8) Crank the engine by means of the starter motor, and read the maximum value on the gauge when the pointer is steady.

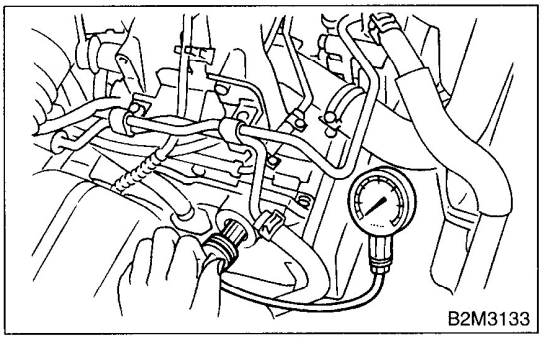

9) Perform at least two measurements per cylinder, and make sure that the values are correct.

Compression (350 rpm and fully open throttle):
Standard;
1,275 kPa (13.0 kgf/cm^2, 185 psi)
Limit;
1,020 kPa (10.4 kgf/cm^2, 148 psi)
Difference between cylinders;
49 kPa (0.5 kgf/cm^2, 7 psi), or less

GETMANUALS.org

3. Idle Speed

A: INSPECTION

1) Before checking the idle speed, check the following:
   (1) Ensure the air cleaner element is free from clogging, ignition timing is correct, spark plugs are in good condition, and that hoses are connected properly.
   (2) Ensure the malfunction indicator light (CHECK ENGINE light) does not illuminate.
2) Warm-up the engine.
3) Stop the engine, and turn the ignition switch to OFF.
4) When using the SUBARU SELECT MONITOR: <Ref. to ME(SOHC)-15, SPECIAL TOOLS, PREPARATION TOOL, General Description.>
   (1) Insert the cartridge to the SUBARU SELECT MONITOR.
   (2) Connect the SUBARU SELECT MONITOR to the data link connector.

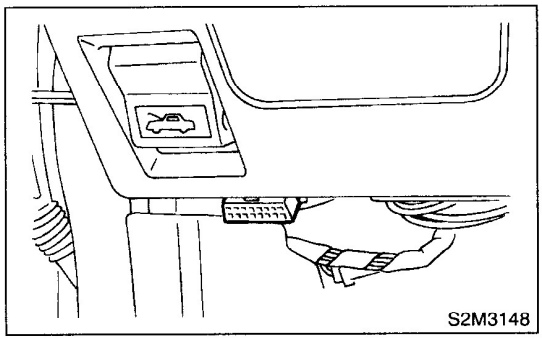
S2M3148

   (3) Turn the ignition switch to ON, and SUBARU SELECT MONITOR switch to ON.
   (4) Select {2. Each System Check} in Main Menu.
   (5) Select {Engine Control System} in Selection Menu.
   (6) Select {1. Current Data Display & Save} in Engine Control System Diagnosis.
   (7) Select {1.12 Data Display} in Data Display Menu.
   (8) Start the engine, and read engine idle speed.
5) When using the tachometer (Secondary pick-up type):
   (1) Attach the pick-up clip to No. 1 cylinder spark plug cord.
   (2) Start the engine, and read engine idle speed.

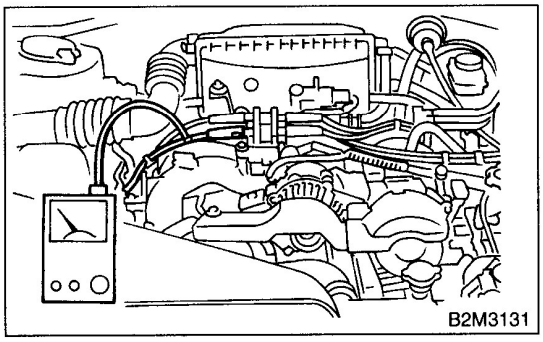
B2M3131

NOTE:
- When using the general scan tool, carefully read its operation manual.
- This ignition system provides simultaneous ignition for #1 and #2 plugs. It must be noted that some tachometers may register twice that of actual engine speed.

6) Check the idle speed when unloaded. (With headlights, heater fan, rear defroster, radiator fan, air conditioning, etc. OFF)

Idle speed (No load and gears in neutral (MT), or N or P (AT) position):
MT vehicle: 650±100 rpm
AT vehicle: 700±100 rpm

7) Check the idle speed when loaded. (Turn the air conditioning switch to "ON" and operate the compressor for at least one minute before measurement.)

Idle speed [A/C "ON", no load and gears in neutral (MT) or N or P (AT) position]:
850±100 rpm

CAUTION:
Never rotate the idle adjusting screw. If the idle speed is out of specifications, refer to General On-board Diagnosis Table under "Engine Control System". <Ref. to EN(SOHC)-2, Basic Diagnostic Procedure.>

GETtheMANUALS.org

4. Ignition Timing

A: INSPECTION

CAUTION:
After warming-up, engine becomes very hot. Be careful not to burn yourself during measurement.

1) Warm-up the engine.
2) To check the ignition timing, connect a timing light to #1 cylinder spark plug cord, and illuminate the timing mark with the timing light.
3) Start the engine at idle speed and check the ignition timing.

Ignition timing [BTDC/rpm]:
MT vehicle: 10°±8°/650
AT vehicle: 15°±8°/700

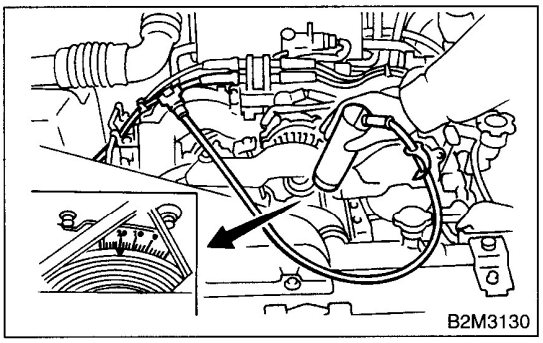

If the timing is not correct, check the ignition control system.
Refer to Engine Control System. <Ref. to EN(SOHC)-2, Basic Diagnostic Procedure.>

GETMANUALS.org

5. Intake Manifold Vacuum

A: INSPECTION

1) Warm-up the engine.
2) Disconnect the brake vacuum hose and install the vacuum gauge to the hose fitting on the manifold.
3) Keep the engine at the idle speed and read the vacuum gauge indication.
By observing the gauge needle movement, the internal condition of the engine can be diagnosed as described below.

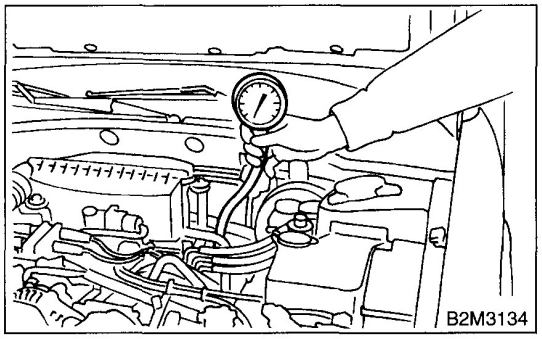

Vacuum pressure (at idling, A/C "OFF"): Less than –60.0 kPa (–450 mmHg, –17.72 in-Hg)

Diagnosis of engine condition by measurement of manifold vacuum	
Vacuum gauge indication	Possible engine condition
1. Needle is steady but lower than normal position. This tendency becomes more evident as engine temperature rises.	Leakage around intake manifold gasket or disconnection or damaged vacuum hose
2. When engine speed is reduced slowly from higher speed, needle stops temporarily when it is lowering or becomes steady above normal position.	Back pressure too high, or exhaust system clogged
3. Needle intermittently drops to position lower than normal position.	Leakage around cylinder
4. Needle drops suddenly and intermittently from normal position.	Sticky valves
5. When engine speed is gradually increased, needle begins to vibrate rapidly at certain speed, and then vibration increases as engine speed increases.	Weak or broken valve springs
6. Needle vibrates above and below normal position in narrow range.	Defective ignition system or throttle chamber idle adjustment

GETtheMANUALS.org

6. Engine Oil Pressure

A: INSPECTION

1) Disconnect the ground terminal from battery.

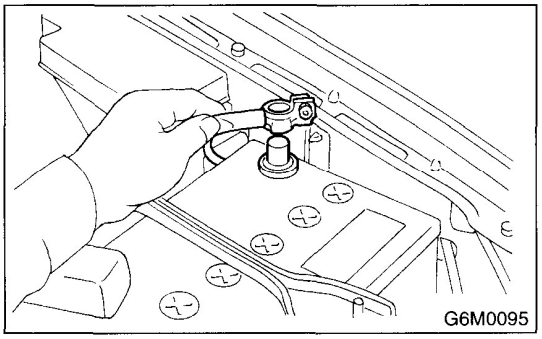

2) Remove the generator from bracket.
   (1) Loosen the lock bolt and slider bolt, and remove the front side V-belt. <Ref. to ME(SOHC)-43, REMOVAL, V-belt.>
   (2) Remove the generator lock bolt.
   (3) Remove the bolt which installs the generator on bracket.

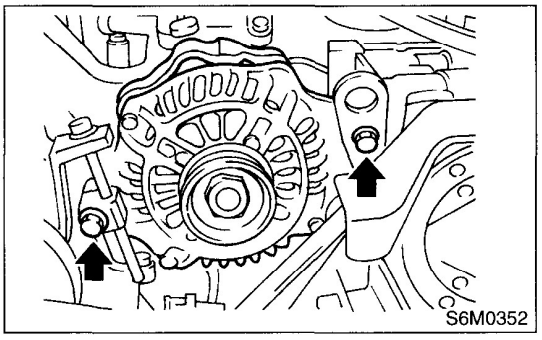

3) Disconnect the connector from oil pressure switch.
4) Remove the oil pressure switch from engine cylinder block. <Ref. to LU-22, REMOVAL, Oil Pressure Switch.>
5) Connect the oil pressure gauge hose to cylinder block.
6) Connect the battery ground terminal to battery.

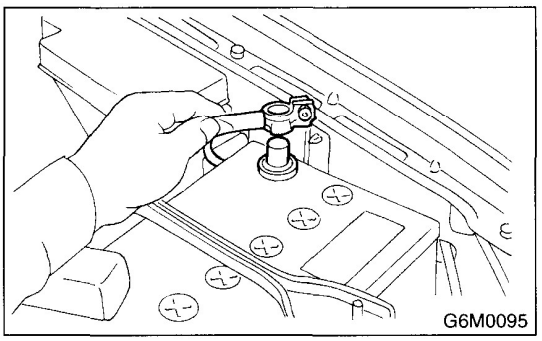

7) Start the engine, and measure oil pressure.

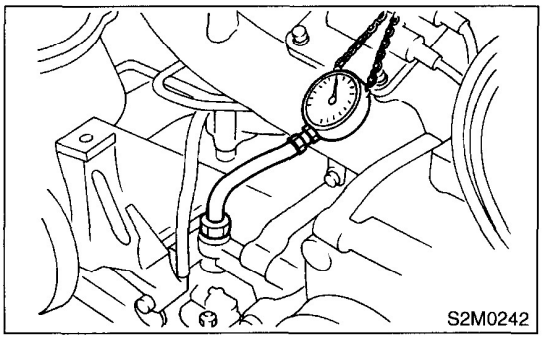

Oil pressure:
98 kPa (1.0 kgf/cm^2, 14 psi) or more at 800 rpm
294 kPa (3.0 kgf/cm^2, 43 psi) or more at 5,000 rpm

CAUTION:
• If the oil pressure is out of specification, check oil pump, oil filter and lubrication line. <Ref. to LU-28, INSPECTION, Engine Lubrication System Trouble in General.>
• If the oil pressure warning light is turned ON and oil pressure is in specification, replace the oil pressure switch. <Ref. to LU-28, INSPECTION, Engine Lubrication System Trouble in General.>

NOTE:
The specified data is based on an engine oil temperature of 80°C (176°F).

8) After measuring the oil pressure, install the oil pressure switch. <Ref. to LU-23, INSTALLATION, Oil Pressure Switch.>

Tightening torque:
25 N·m (2.5 kgf-m, 18.1 ft-lb)

9) Install the generator and V-belt in the reverse order of removal, and adjust the V-belt deflection. <Ref. to ME(SOHC)-43, INSTALLATION, V-belt.>

GETtheMANUALS.org

7. Fuel Pressure

A: INSPECTION

WARNING:
Before removing the fuel pressure gauge, release the fuel pressure.

NOTE:
If out of specification, check or replace the pressure regulator and pressure regulator vacuum hose.

1) Release the fuel pressure. <Ref. to FU(SOHC)-50, RELEASING OF FUEL PRESSURE, OPERATION, Fuel.>
2) Open the fuel flap lid, and remove the fuel filler cap.

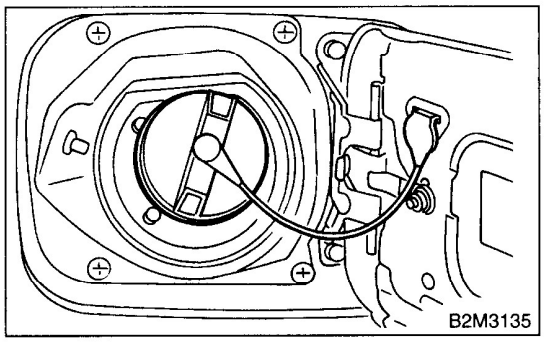
B2M3135

3) Disconnect the fuel delivery hoses from fuel filter, and connect the fuel pressure gauge.

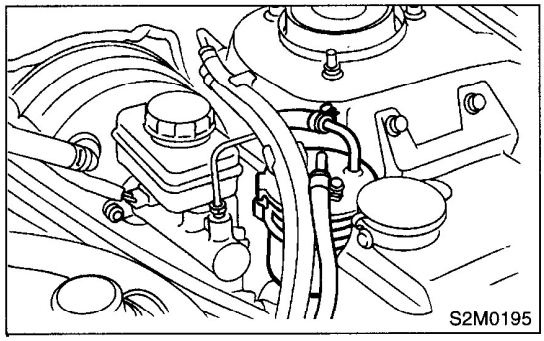
S2M0195

4) Connect the connector of fuel pump relay.

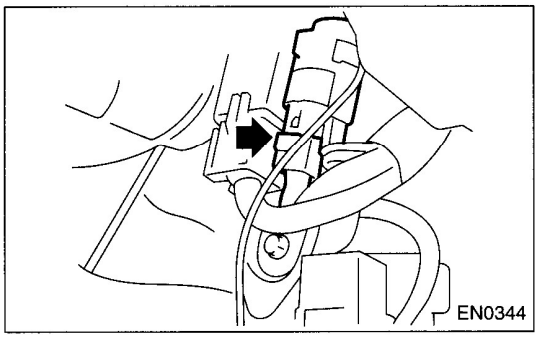
EN0344

5) Start the engine.
6) Measure fuel pressure while disconnecting the pressure regulator vacuum hose from intake manifold.

Fuel pressure:
Standard; 284 — 314 kPa (2.9 — 3.2 kgf/cm^2, 41 — 46 psi)

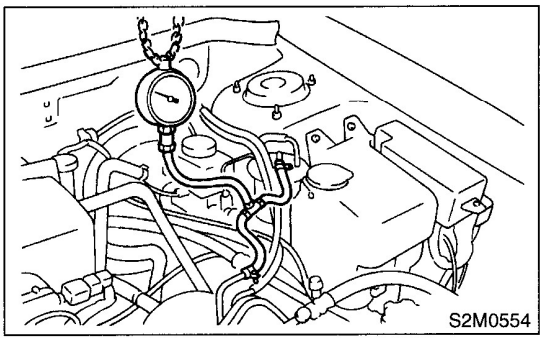
S2M0554

7) After connecting the pressure regulator vacuum hose, measure fuel pressure.

Fuel pressure:
Standard; 206 — 235 kPa (2.1 — 2.4 kgf/cm^2, 30 — 34 psi)

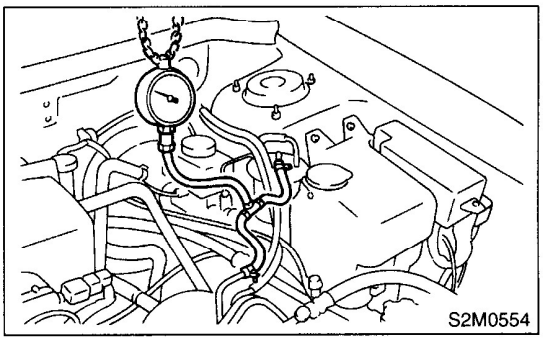
S2M0554

NOTE:
The fuel pressure gauge registers 10 to 20 kPa (0.1 to 0.2 kgf/cm^2, 1 to 3 psi) higher than standard values during high-altitude operations.

GETtheMANUALS.org

8. Valve Clearance

A: INSPECTION

CAUTION:
Inspection and adjustment of valve clearance should be performed while engine is cold.

1) Set the vehicle onto the lift.
2) Lift-up the vehicle.
3) Remove the under cover.
4) Disconnect the ground terminal from battery.

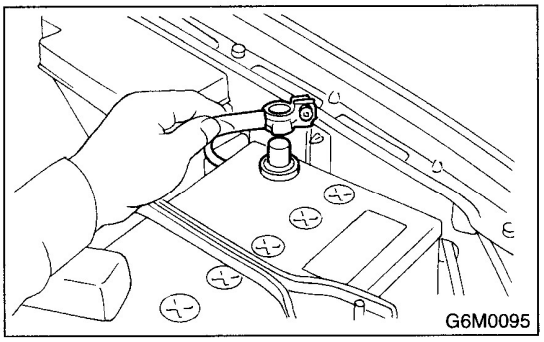

5) Lower the vehicle.
6) Remove the timing belt cover (LH).

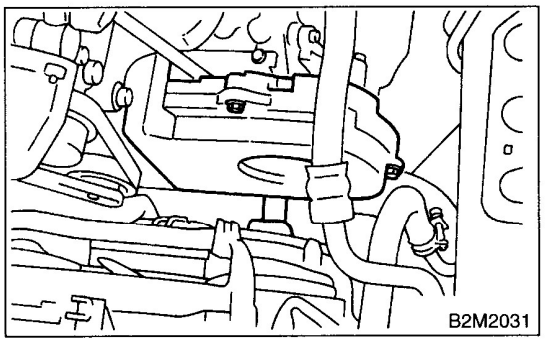

7) When inspecting #1 and #3 cylinders:
   (1) Remove the air intake duct as a unit.

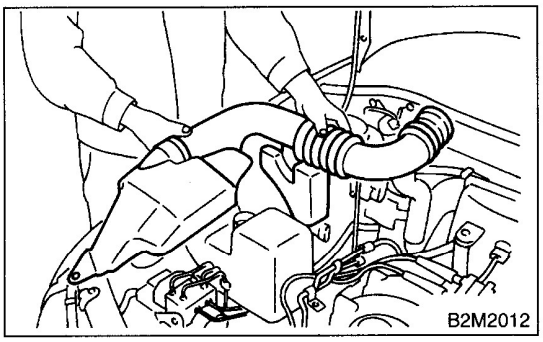

   (2) Rmove the resonator chamber.

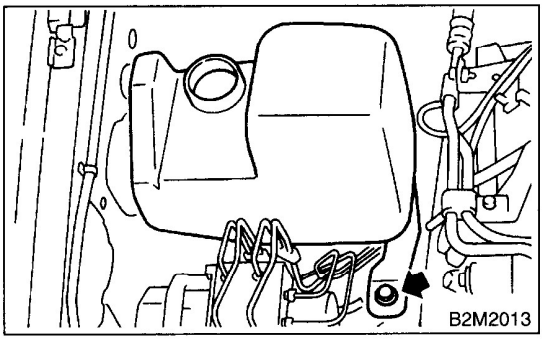

   (3) Disconnect the spark plug cords from spark plugs RH side. <Ref. to IG(SOHC)-4, RH SIDE, REMOVAL, Spark Plug.>
   (4) Disconnect the PCV hose from rocker cover (RH).
   (5) Remove the bolts, then remove the rocker cover (RH).
8) When inspecting #2 and #4 cylinders:
   (1) Remove the battery and battery carrier.
   (2) Disconnect the window washer motor connectors.
   (3) Remove the two bolts which hold washer tank, then secure the tank away from working area.

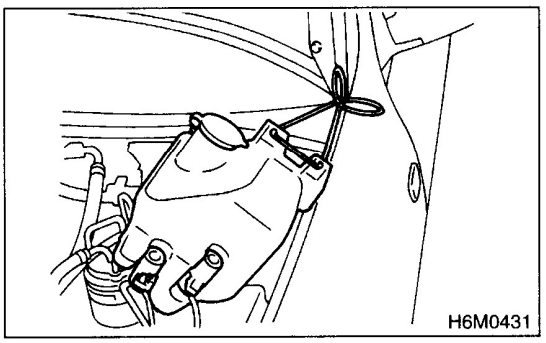

   (4) Disconnect the spark plug cords from spark plugs (LH Side) <Ref. to IG(SOHC)-4, LH SIDE, REMOVAL, Spark Plug.>
   (5) Disconnect the PCV hose from rocker cover (LH).
   (6) Remove the bolts, then remove the rocker cover (LH).

GETTHEMANUALS.org

9) Set #1 cylinder piston to top dead center of compression stroke by rotating the crankshaft pulley clockwise using ST.

ST 499977100 CRANKSHAFT PULLEY WRENCH

NOTE:
When the arrow mark (A) on camshaft sprocket (LH) comes exactly to the top, #1 cylinder piston is brought to the top dead center of compression stroke.

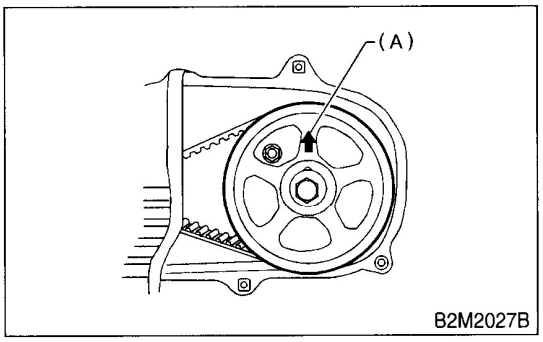

10) Measure #1 cylinder valve clearance by using thickness gauge (A).

CAUTION:
• Insert the thickness gauge in as horizontal a direction as possible with respect to the valve stem end face.
• Measure the exhaust valve clearances while lifting-up the vehicle.

Valve clearance:
Intake;
0.20±0.02 mm (0.0079±0.0008 in)
Exhaust;
0.25±0.02 mm (0.0098±0.0008 in)

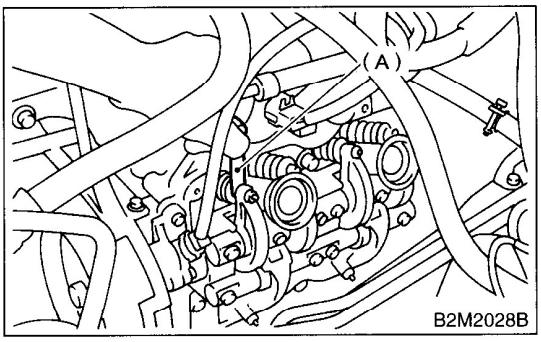

11) If necessary, adjust the valve clearance. <Ref. to ME(SOHC)-31, ADJUSTMENT, Valve Clearance.>

12) Similar to measurement procedures used for #1 cylinder, measure #2, #3 and #4 cylinder valve clearances.

NOTE:
• Be sure to set the cylinder pistons to their respective top dead centers on compression stroke before measuring valve clearances.
• To set #3, #2 and #4 cylinder pistons to their top dead centers on compression stroke, turn the crankshaft pulley clockwise 90° at a time starting with arrow mark on left-hand camshaft sprocket facing up.

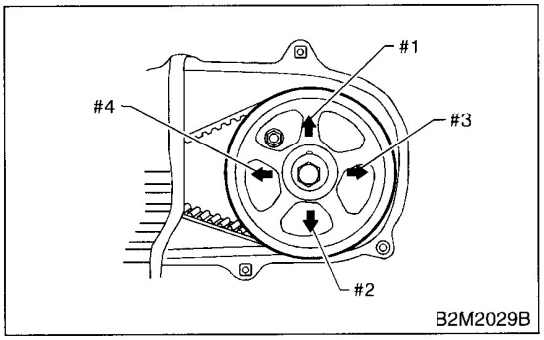

13) After inspection, install the related parts in the reverse order of removal.

Tightening torque:
Resonator chamber;
33 N·m (3.4 kgf-m, 24 ft-lb)

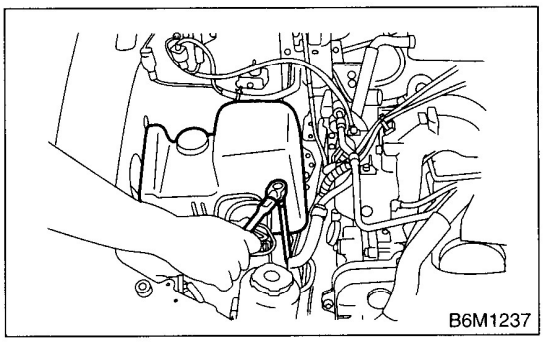

GETtheMANUALS.org

B: ADJUSTMENT

CAUTION:
Adjustment of valve clearance should be performed while engine is cold.

1) Set #1 cylinder piston to top dead center of compression stroke by rotating the crankshaft pulley clockwise using ST.

ST 499977100 CRANKSHAFT PULLEY WRENCH

NOTE:
When the arrow mark (A) on camshaft sprocket (LH) comes exactly to the top, #1 cylinder piston is brought to the top dead center of compression stroke.

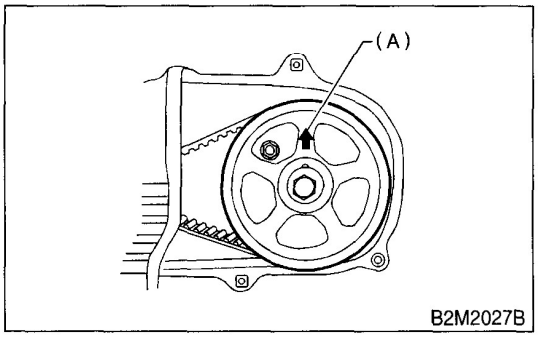

2) Adjust the #1 cylinder valve clearance.
(1) Loosen the valve rocker nut and screw.
(2) Place suitable thickness gauge.
(3) While noting the valve clearance, tighten the valve rocker adjust screw.
(4) When the specified valve clearance is obtained, tighten the valve rocker nut.

Tightening torque:
10 N·m (1.0 kgf-m, 7.2 ft-lb)

CAUTION:
• Insert the thickness gauge in as horizontal a direction as possible with respect to the valve stem end face.
• Adjust the exhaust valve clearances while lifting-up the vehicle.

Valve clearance:
Intake;
0.20±0.02 mm (0.0079±0.0008 in)
Exhaust;
0.25±0.02 mm (0.0098±0.0008 in)

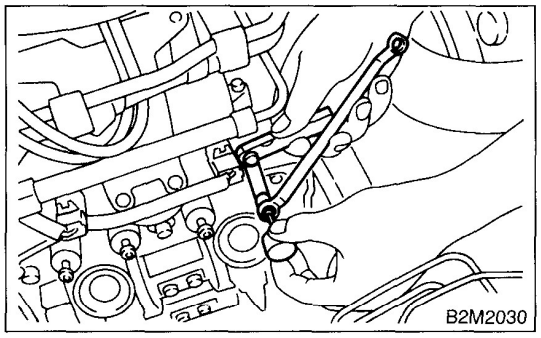

3) Ensure the valve clearances are within specifications.
4) Turn the crankshaft two complete rotations until #1 cylinder piston is again set to top dead center on compression stroke.
5) Ensure the valve clearances are within specifications. If necessary, readjust the valve clearances.

GETtheMANUALS.org

6) Similar to adjustment procedures used for #1 cylinder, adjust #2, #3 and #4 cylinder valve clearances.

NOTE:
• Be sure to set the cylinder pistons to their respective top dead centers on compression stroke before adjusting valve clearances.
• To set #3, #2 and #4 cylinder pistons to their top dead centers on compression stroke, turn the crankshaft pulley clockwise 90° at a time starting with arrow mark on left-hand camshaft sprocket facing up.

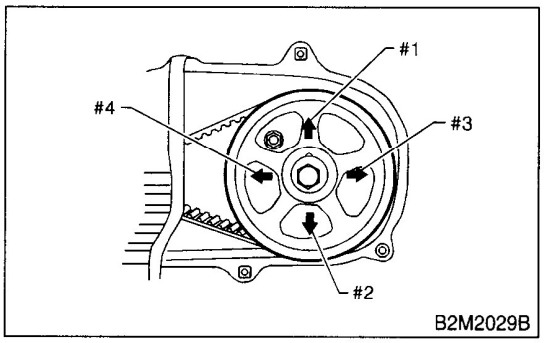

GETtheMANUALS.org

9. Engine Assembly

A: REMOVAL

1) Set the vehicle on lift arms.
2) Open the front hood fully and support with stay.
3) Release the fuel pressure. <Ref. to FU(SOHC)-50, RELEASING OF FUEL PRESSURE, OPERATION, Fuel.>
4) Remove the filler cap.
5) Disconnect the battery ground terminal.

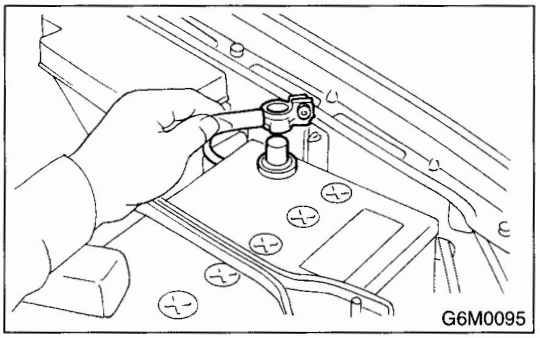
G6M0095

6) Remove the air intake duct and air cleaner case. <Ref. to IN(SOHC)-7, REMOVAL, Air Intake Duct.> and <Ref. to IN(SOHC)-6, REMOVAL, Air Cleaner Case.>
7) Remove the under cover.
8) Remove the radiator from vehicle. <Ref. to CO-37, REMOVAL, Radiator.>
9) Remove ATF cooler pipe from cylinder head. <Ref. to AT-47, REMOVAL, ATF Cooler Pipe and Hose.>
10) Collect refrigerant, and remove the pressure hoses. (With A/C)
   (1) Place and connect the attachment hose to the refrigerant recycle system.
   (2) Collect the refrigerant from A/C system.
   (3) Disconnect the A/C pressure hoses from A/C compressor.

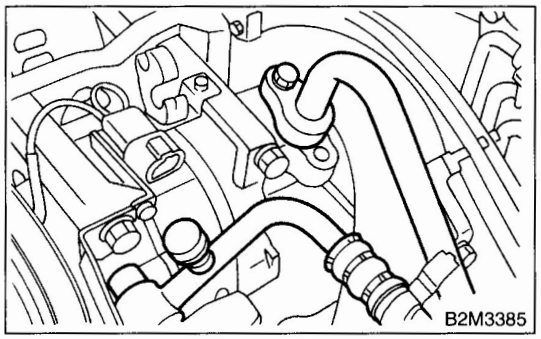
B2M3385

11) Remove the air cleaner case stay.
- **MT model**

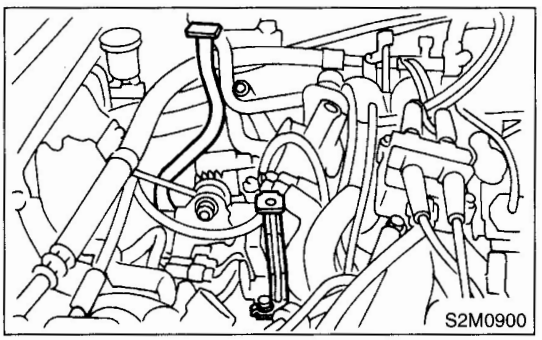
S2M0900

- **AT model**

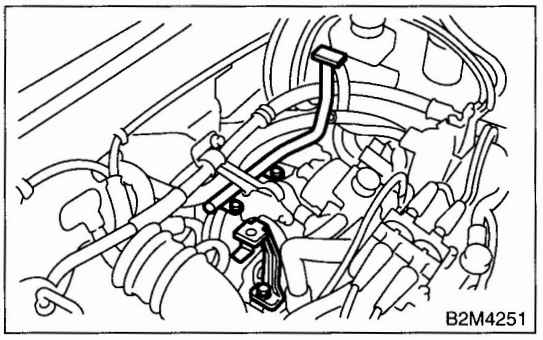
B2M4251

12) Disconnect the following connectors and cables.
   (1) Front oxygen (A/F) sensor connector

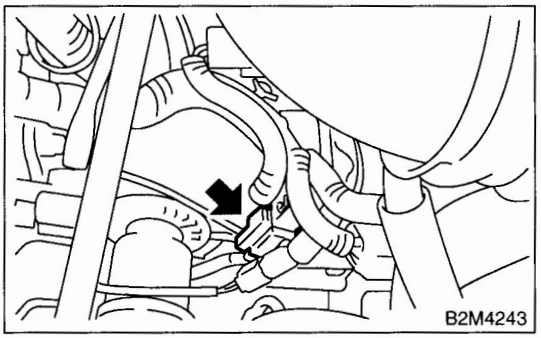
B2M4243

   (2) Engine ground terminal

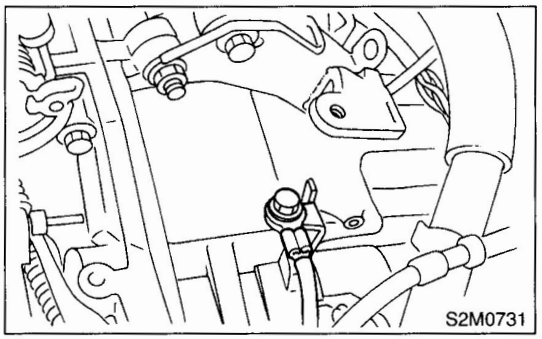
S2M0731

GETtheMANUALS.org

(3) Engine harness connectors

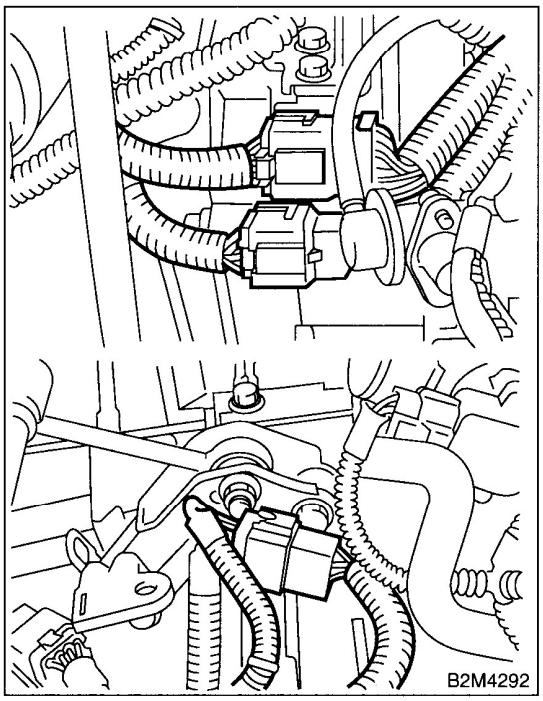

(4) Generator connector, terminal and A/C compressor connector

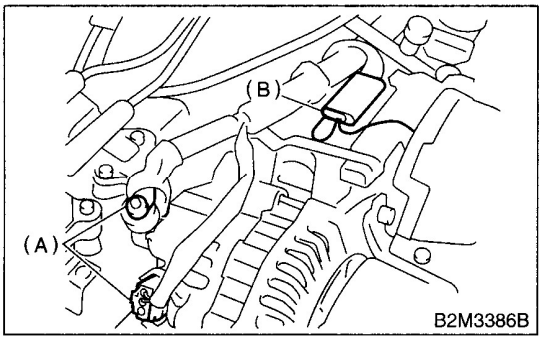

(A) Generator connector and terminal
(B) A/C compressor connector

(5) Accelerator cable and cruise control cable

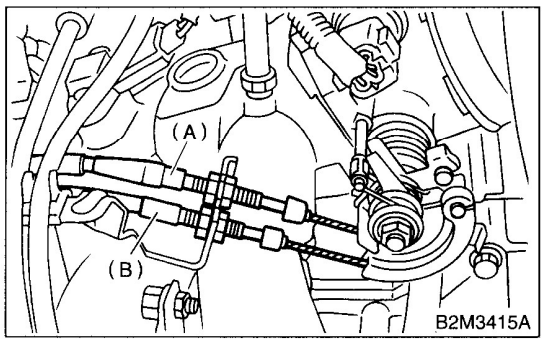

(A) Accelerator cable
(B) Cruise control cable

(6) Pressure switch

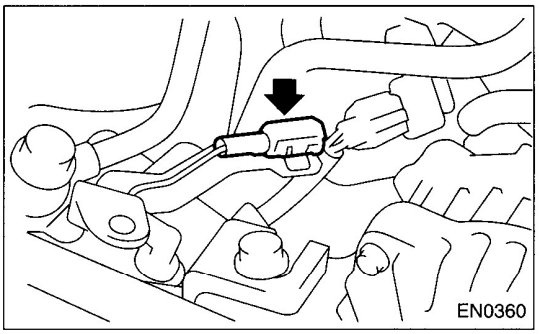

13) Disconnect the following hoses.
(1) Brake booster vacuum hose

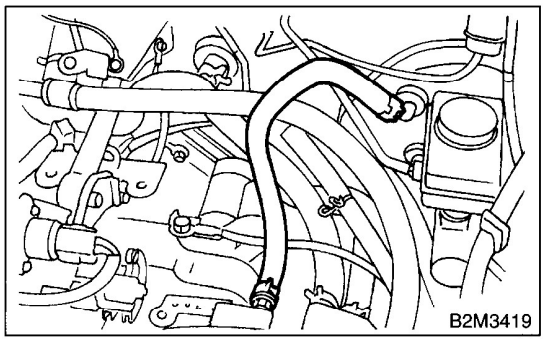

(2) Heater inlet outlet hose

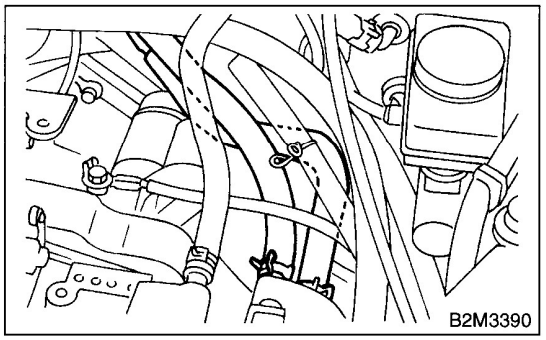

GETtheMANUALS.org

14) Remove the power steering pump from bracket.
(1) Remove the resonator chamber.
(2) Loosen the lock bolt and slider bolt, and remove the front side V-belt.<Ref. to ME(SOHC)-43, FRONT SIDE BELT, REMOVAL, V-belt.>
(3) Remove the pipe with bracket.

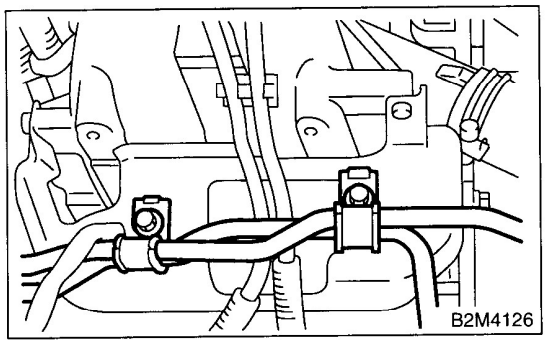
B2M4126

(4) Remove the bolts which install the power steering pump bracket.

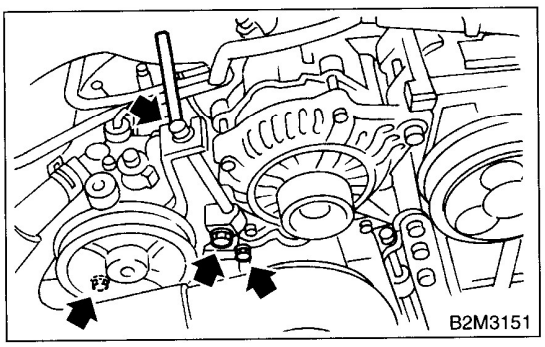
B2M3151

(5) Remove the power steering tank from the bracket by pulling it upward.

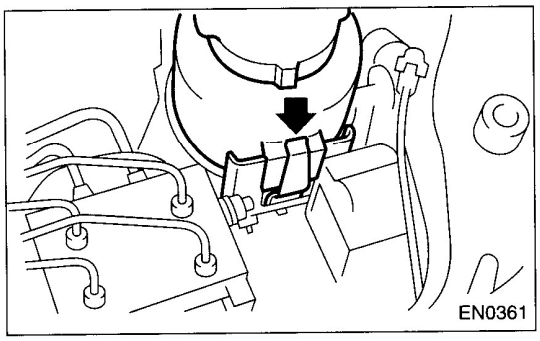
EN0361

(6) Place the power steering pump on the right side wheel apron.

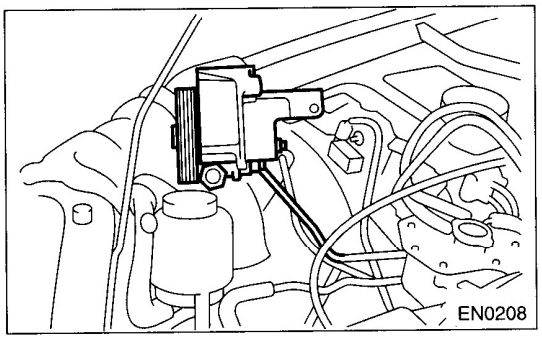
EN0208

15) Remove the front and center exhaust pipe.
<Ref. to EX(SOHC)-5, REMOVAL, Front Exhaust Pipe.>
16) Remove the nuts which hold lower side of transmission to engine.

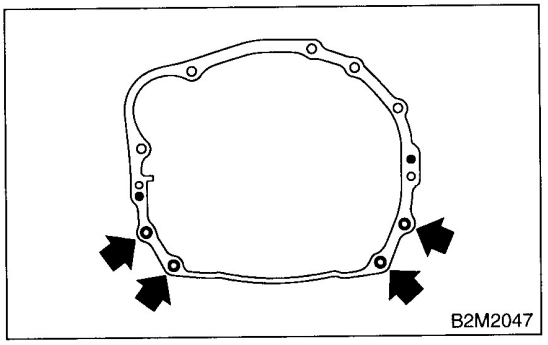
B2M2047

17) Remove the nuts which install the front cushion rubber onto front crossmember.

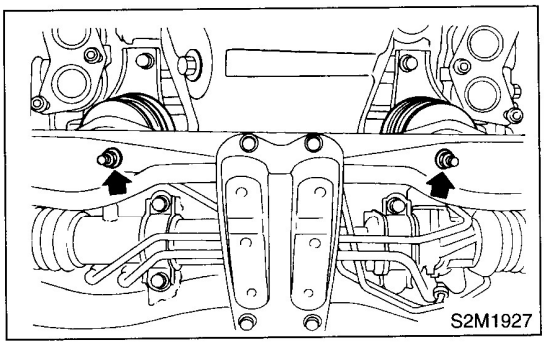
S2M1927

GETtheMANUALS.org

18) Separate the torque converter clutch from drive plate. (AT model)
(1) Lower the vehicle.
(2) Remove the service hole plug.
(3) Remove the bolts which hold torque converter clutch to drive plate.
(4) Remove the other bolts while rotating the engine using ST.

ST 499977100 CRANK PULLEY WRENCH

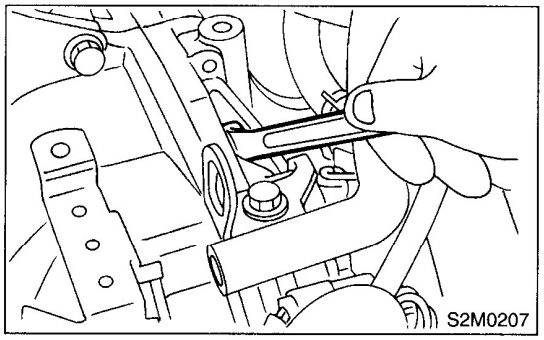
S2M0207

19) Remove the pitching stopper.

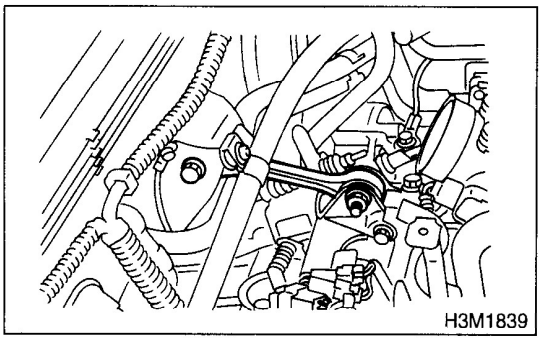
H3M1839

20) Disconnect the fuel delivery hose, return hose and evaporation hose.

CAUTION:
• Disconnect the hose with its end wrapped with cloth to prevent fuel from splashing.
• Catch fuel from hose into container.

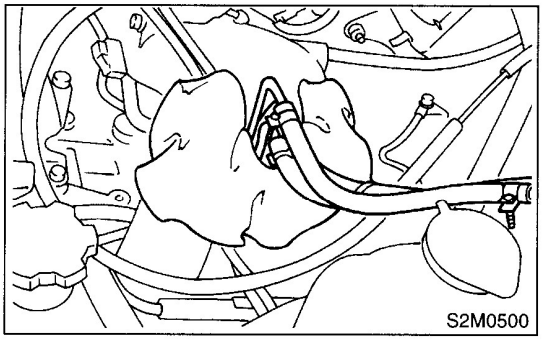
S2M0500

21) Support the engine with a lifting device and wire ropes.

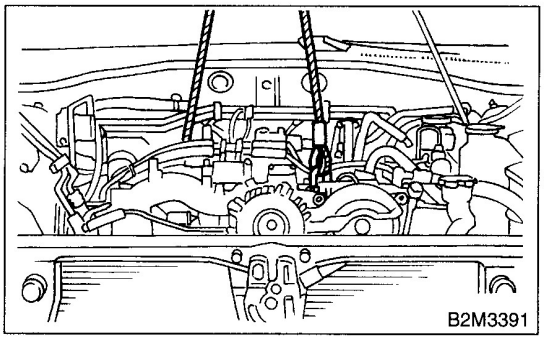
B2M3391

22) Support the transmission with a garage jack.

CAUTION:
Before moving the engine away from transmission, check to be sure no work has been overlooked. Doing this is very important in order to facilitate re-installation and because transmission lowers under its own weight.

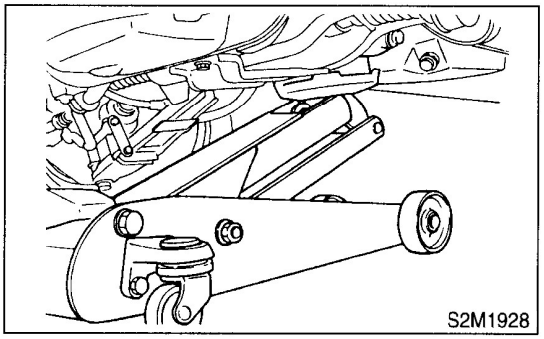
S2M1928

23) Separation of engine and transmission.
(1) Remove the starter. <Ref. to SC-6, REMOVAL, Starter.>
(2) Remove the bolts which hold upper side of transmission to engine.

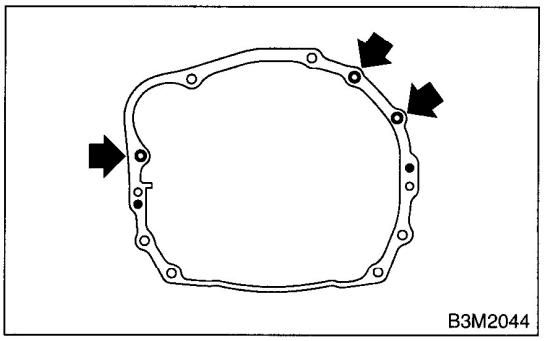
B3M2044

GETtheMANUALS.org

24) Install the ST to torque converter clutch case. (AT model)
ST 498277200 STOPPER SET

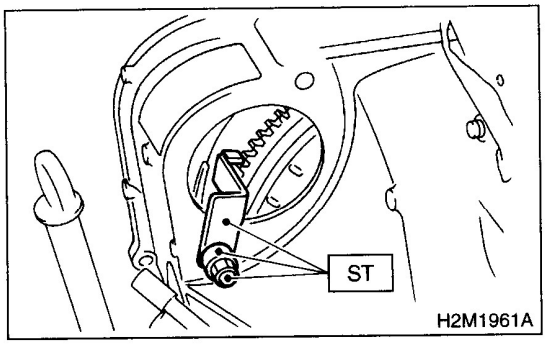

25) Remove the engine from vehicle.
(1) Slightly raise the engine.
(2) Raise the transmission with garage jack.
(3) Move the engine horizontally until main shaft is withdrawn from clutch cover.
(4) Slowly move the engine away from engine compartment.

CAUTION:
Be careful not to damage adjacent parts or body panels with crank pulley, oil level gauge, etc.

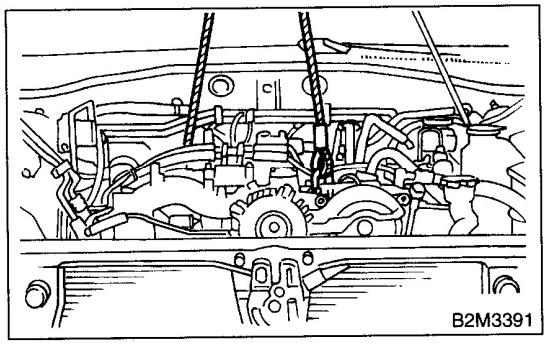

26) Remove the front cushion rubbers.

B: INSTALLATION

1) Install the front cushion rubbers.

Tightening torque:
34 N·m (3.5 kgf-m, 25.3 ft-lb)

2) Install the engine onto transmission.
(1) Position the engine in engine compartment and align it with transmission.

CAUTION:
Be careful not to damage adjacent parts or body panels with crank pulley, oil level gauge, etc.

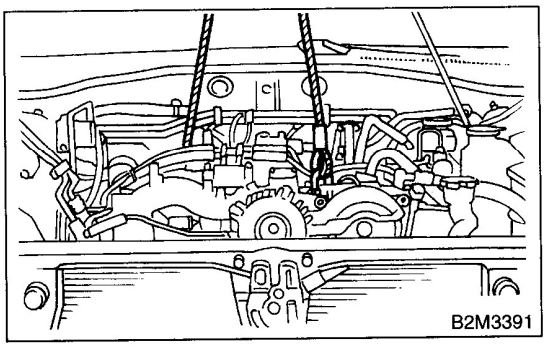

(2) Apply a small amount of grease to spline of main shaft. (MT model)

3) Tighten the bolts which hold upper side of transmission to engine.

Tightening torque:
50 N·m (5.1 kgf-m, 36.9 ft-lb)

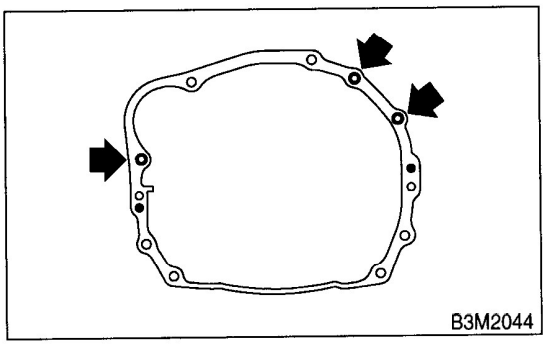

4) Remove the lifting device and wire ropes.

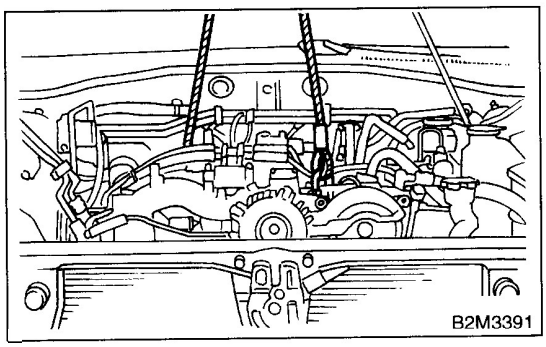

5) Remove the garage jack.

GETtheMANUALS.org

6) Install the pitching stopper.

Tightening torque:
T1: 50 N·m (5.1 kgf-m, 36.9 ft-lb)
T2: 58 N·m (5.9 kgf-m, 42.8 ft-lb)

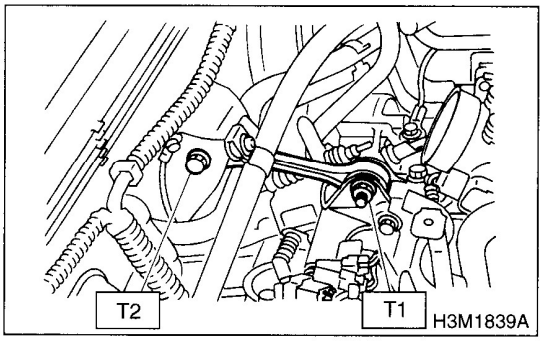

7) Remove the ST from torque converter clutch case. (AT model)

NOTE:
Be careful not to drop the ST into the torque converter clutch case when removing ST.

ST 498277200 STOPPER SET

8) Install the starter. <Ref. to SC-7, INSTALLATION, Starter.>

9) Install the torque converter clutch onto drive plate. (AT model)
(1) Tighten the bolts which hold torque converter clutch to drive plate.
(2) Tighten other bolts while rotating the engine by using ST.

CAUTION:
Be careful not to drop bolts into the torque converter clutch housing.

ST 499977100 CRANK PULLEY WRENCH

Tightening torque:
25 N·m (2.5 kgf-m, 18.1 ft-lb)

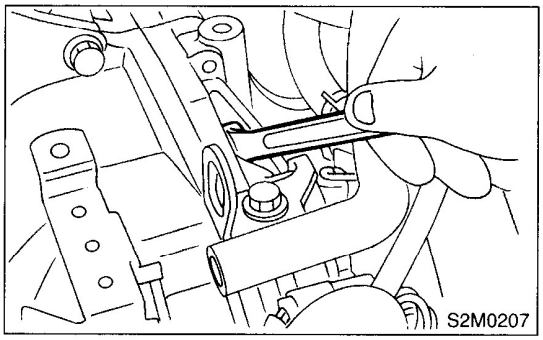

(3) Clog the service hole with plug.

10) Install the power steering pump on bracket.
(1) Install the power steering tank on bracket.

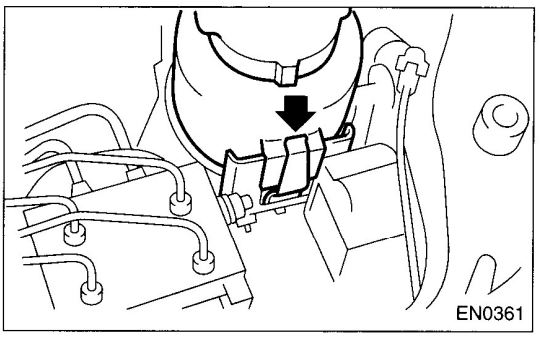

(2) Install the power steering pump on bracket, and tighten the bolts.

Tightening torque:
20.1 N·m (2.05 kgf-m, 14.8 ft-lb)

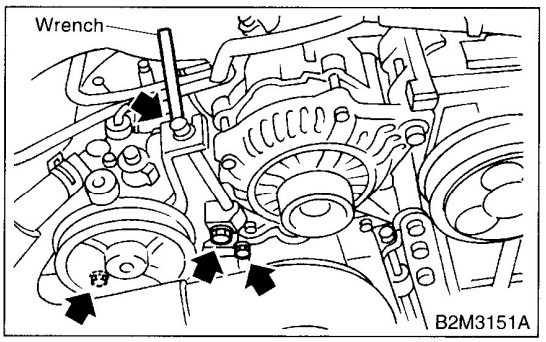

(3) Tighten the bolt which installs the power steering pump bracket, and install the spark plug codes.

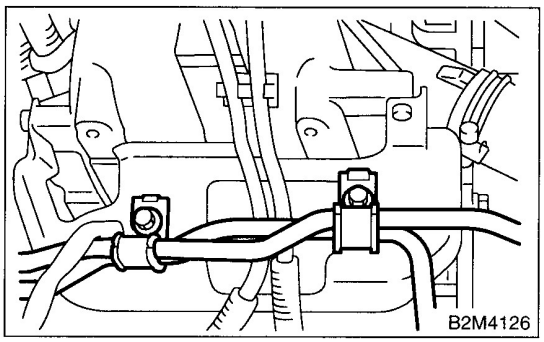

(4) Connect the power steering switch connector.

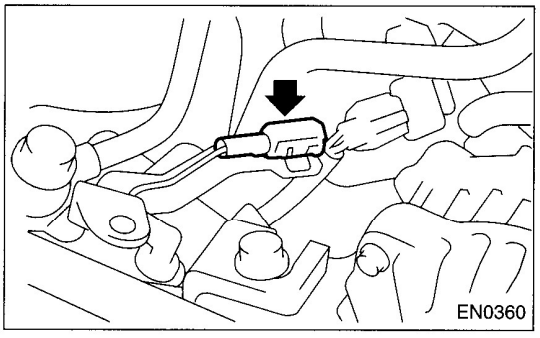

GETtheMANUALS.org

(5) Install the front side V-belt, and adjust it. <Ref. to ME(SOHC)-43, FRONT SIDE BELT, INSTALLATION, V-belt.>
(6) Install the resonator chamber.

Tightening torque:
33 N·m (3.4 kgf-m, 24.6 ft-lb)

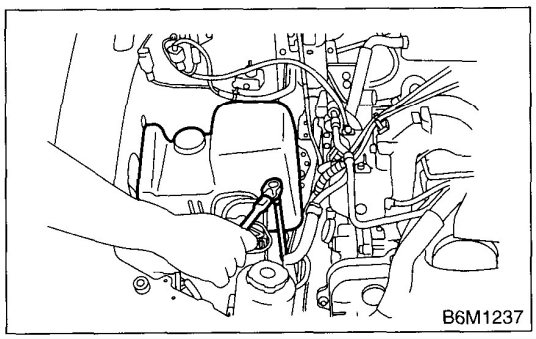

11) Tighten the nuts which hold lower side of transmission to engine.

Tightening torque:
50 N·m (5.1 kgf-m, 36.9 ft-lb)

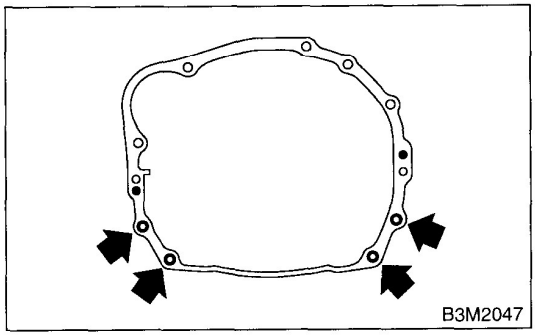

12) Tighten the nuts which install the front cushion rubber onto crossmember.

Tightening torque:
85 N·m (8.7 kgf-m, 63 ft-lb)

CAUTION:
Make sure the front cushion rubber mounting bolts (A) and locator (B) are securely installed.

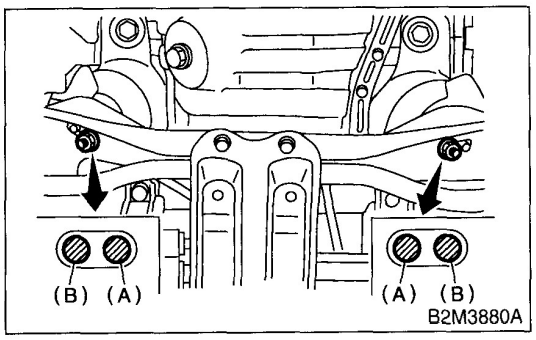

13) Install the front and center exhaust pipe. <Ref. to EX(SOHC)-6, INSTALLATION, Front Exhaust Pipe.>
14) Connect the following hoses:
(1) Fuel delivery hose, return hose and evaporation hose
(2) Heater inlet and outlet hoses
(3) Brake booster vacuum hose
15) Connect the following connectors:
(1) Engine ground terminals

Tightening torque:
14 N·m (1.4 kgf-m, 10.1 ft-lb)

(2) Engine harness connectors
(3) Generator connector and terminal
(4) A/C compressor connectors
(5) Power steering pressure switch
16) Connect the following cables:
(1) Accelerator cable
(2) Cruise control cables (With cruise control)

CAUTION:
After connecting each cable, adjust them.

17) Install the air cleaner case stay.

Tightening torque:
16 N·m (1.6 kgf-m, 11.6 ft-lb)

18) Install the A/C pressure hoses. <Ref. to AC-30, INSTALLATION, Hose and Tube.>

CAUTION:
Use new O-rings.

Tightening torque:
25 N·m (2.5 kgf-m, 18.1 ft-lb)

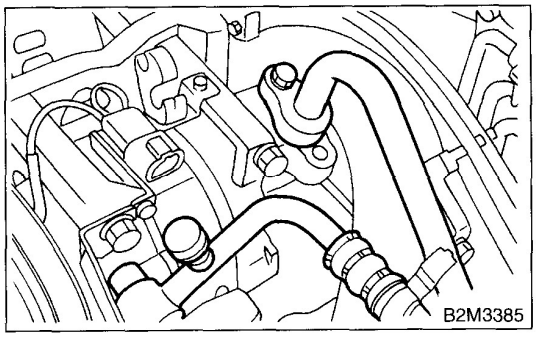

19) Install the radiator to vehicle. <Ref. to CO-41, INSTALLATION, Radiator.>
20) Install the ATF cooler pipe. <Ref. to AT-49, INSTALLATION, ATF Cooler Pipe and Hose.>.
21) Install the under cover.
22) Install the battery in the vehicle, and connect cables.

GETtheMANUALS.org

23) Fill coolant.
<Ref. to CO-25, FILLING OF ENGINE COOLANT, REPLACEMENT, Engine Coolant.>
24) Check the ATF level and correct if necessary. (AT model)
<Ref. to AT-9, INSPECTION, Automatic Transmission Fluid.>
25) Charge the A/C system with refrigerant.
<Ref. to AC-17, OPERATION, Refrigerant Charging Procedure.>
26) Install the air intake duct and air cleaner case.
<Ref. to IN(SOHC)-7, INSTALLATION, Air Intake Duct.> and <Ref. to IN(SOHC)-6, INSTALLATION, Air Cleaner Case.>
27) Remove the front hood stay, and close the front hood.
28) Take off the vehicle from lift arms.

C: INSPECTION

1) Make sure pipes and hoses are installed correctly.
2) Make sure the engine coolant and ATF are at specified levels.

GETtheMANUALS.org

10.Engine Mounting

A: REMOVAL

1) Remove the engine assembly. <Ref. to ME(SOHC)-33, REMOVAL, Engine Assembly.>
2) Remove the engine mounting from engine assembly.

B: INSTALLATION

Install in the reverse order of removal.

Tightening torque:
Engine mounting;
35 N·m (3.6 kgf-m, 25.8 ft-lb)

C: INSPECTION

Make sure there are no cracks or other damage.

GETtheMANUALS.org

11.Preparation for Overhaul

A: PROCEDURE

1) After removing the engine from the body, secure it in the ST shown below.

ST1	498457000	ENGINE STAND ADAPTER RH
ST2	498457100	ENGINE STAND ADAPTER LH
ST3	499817100	ENGINE STAND

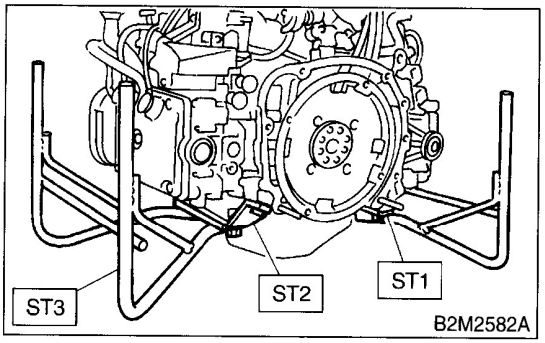

2) In this section the procedures described under each index are all connected and stated in order. It will be the complete procedure for overhauling of the engine itself when you go through all steps in the process.
Therefore, in this section, to conduct the particular procedure within the flow of a section, you need to go back and conduct the procedure described previously in order to do that particular procedure.

GETtheMANUALS.org

12. V-belt

A: REMOVAL

1. FRONT SIDE BELT

NOTE:
Perform the following procedures 1) to 4) with the engine installed to the body.

1) Remove the V-belt cover.

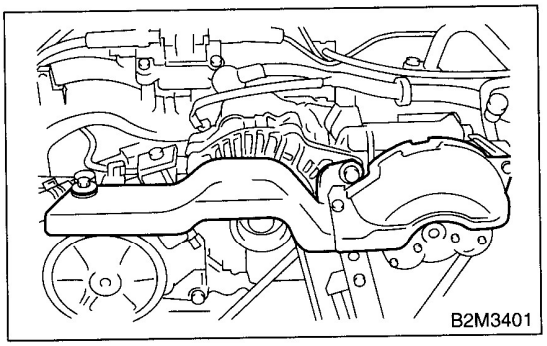

2) Loosen the lock bolt (A).
3) Loosen the slider bolt (B).
4) Remove the front side belt (C).

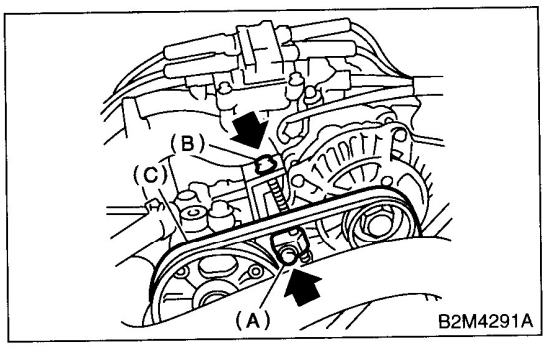

2. REAR SIDE BELT

1) Loosen the lock nut (A).
2) Loosen the slider bolt (B).

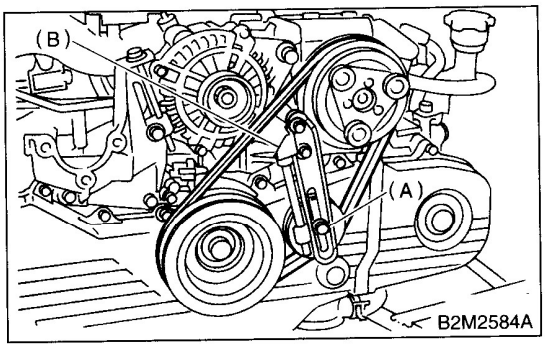

3) Remove the A/C belt.
4) Remove the A/C belt tensioner.

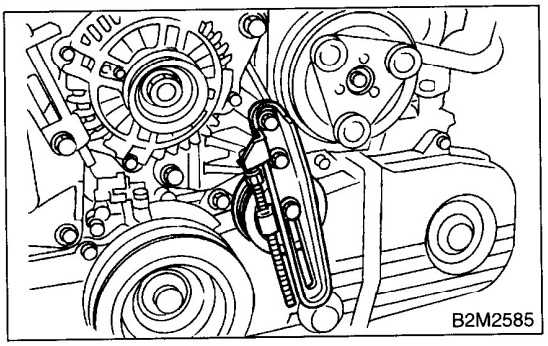

B: INSTALLATION

1. FRONT SIDE BELT

CAUTION:
Wipe off any oil or water on the belt and pulley.

1) Install a belt, and tighten the slider bolt so as to obtain the specified belt tension <Ref. to ME(SOHC)-44, INSPECTION, V-belt.>
2) Tighten the lock bolt (A)
3) Tighten the slider bolt (B).

Tightening torque:
Lock bolt through bolt:
25 N·m (2.5 kgf-m, 18 ft-lb)
Slider bolt:
8 N·m (0.8 kgf-m, 5.5 ft-lb)

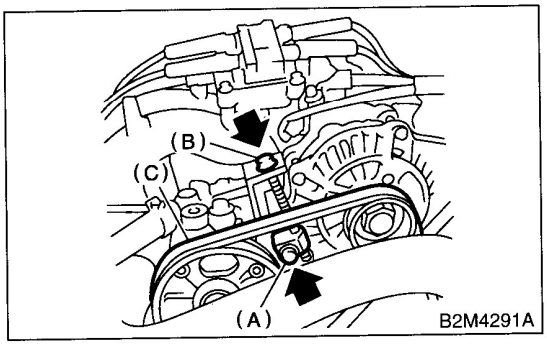

GETtheMANUALS.org

2. REAR SIDE BELT

1) Install a belt, and tighten the slider bolt (B) so as to obtain the specified belt tension. <Ref. to ME(SOHC)-44, INSPECTION, V-belt.>
2) Tighten the lock nut (A).

Tightening torque:
Lock nut (A);
22.6 N·m (2.3 kgf-m, 16.6 ft-lb)

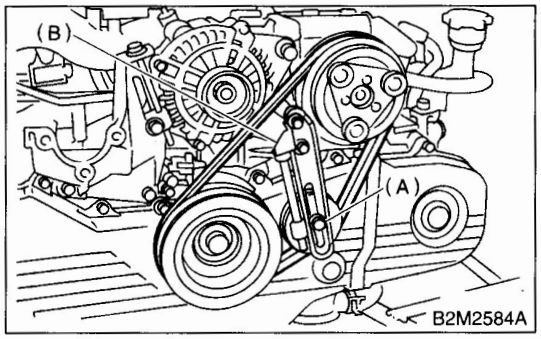

C: INSPECTION

1) Replace the belts, if cracks, fraying or wear is found.
2) Check the drive belt tension and adjust it if necessary by changing generator installing position and/or idler pulley installing position.

Belt tension
(A)
replaced: 7 — 9 mm (0.276 — 0.354 in)
reused: 9 — 11 mm (0.354 — 0.433 in)
(B)*
replaced: 7.5 — 8.5 mm (0.295 — 0.335 in)
reused: 9.0 — 10.0 mm (0.354 — 0.394 in)
****: With Air conditioner***

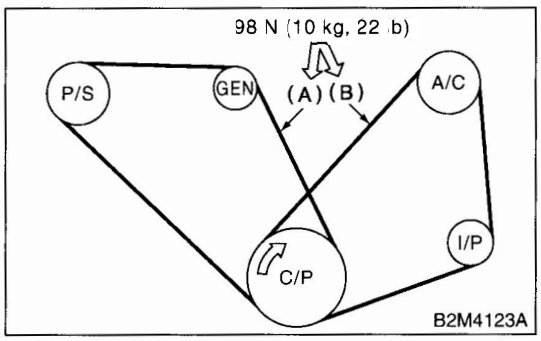

C/P Crankshaft pulley
GEN Generator
P/S Power steering oil pump pulley
A/C Air conditioning compressor pulley
/P Idler pulley

GETtheMANUALS.org

13.Crankshaft Pulley

A: REMOVAL

1) Remove the V-belt. <Ref. to ME(SOHC)-43, REMOVAL, V-belt.>
2) Remove the crankshaft pulley bolt. To lock crankshaft, use ST.
ST 499977100
CRANKSHAFT PULLEY WRENCH

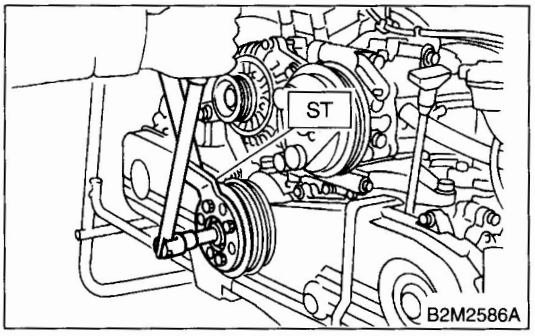

3) Remove the crankshaft pulley.

B: INSTALLATION

1) Install the crankshaft pulley.
2) Install the pulley bolt.
To lock the crankshaft, use ST.
ST 499977100 CRANKSHAFT PULLEY WRENCH
(1) Clean the crankshaft pulley thread using an air gun.
(2) Apply engine oil to the crankshaft pulley bolt seat and thread.
(3) Tighten the bolts temporarily with tightening torque of 44 N·m (4.5 kgf-m, 33 ft-lb).
(4) Tighten the crankshaft pulley bolts.

Tightening torque:
177 N·m (18 kgf-m, 130.2 ft-lb)

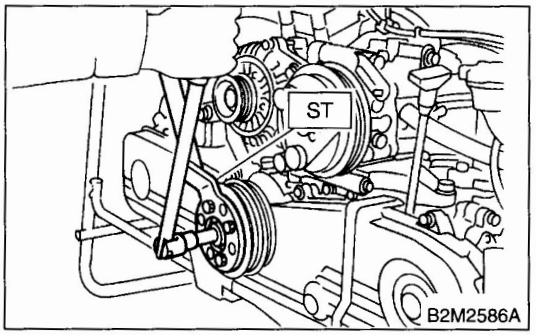

3) Confirm that the tightening angle of the crankshaft pulley bolt is 65 degrees or more. If not, conduct the following procedures (1) through (4):
(1) Replace the crankshaft pulley bolts and clean them.

Crankshaft pulley bolt:
12369AA011

(2) Clean the crankshaft thread using an air gun.
(3) Tighten the bolts temporarily with tightening torque of 44 N·m (4.5 kgf-m, 33 ft-lb).
(4) Tighten the crankshaft pulley bolts keeping them in an angle between 45 degrees and 60 degrees.

CAUTION:
Conduct the tightening procedures by confirming the turning angle of the crankshaft pulley bolt referring to the gauge indicated on the belt cover.

4) Install the A/C belt tensioner.

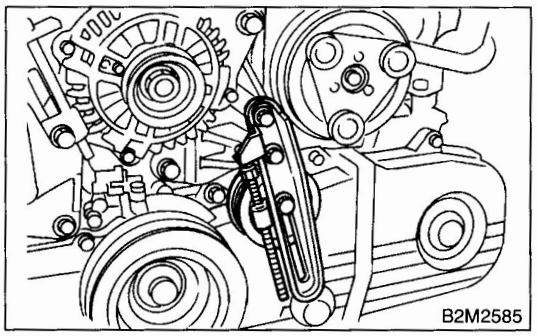

5) Install the A/C belt.

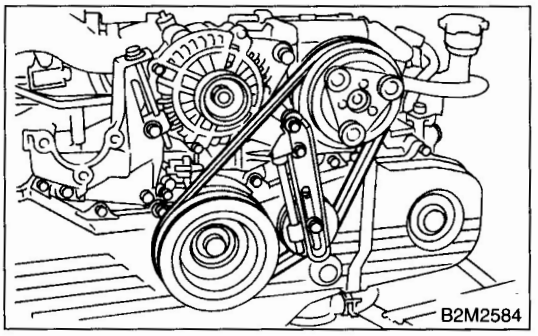

C: INSPECTION

1) Make sure the V-belt is not worn or otherwise damaged.
2) Check the tension of the belt. <Ref. to ME(SOHC)-44, INSPECTION, V-belt.>

GETtheMANUALS.org

14.Belt Cover

A: REMOVAL

1) Remove the V-belt. <Ref. to ME(SOHC)-43, REMOVAL, V-belt.>
2) Remove the crankshaft pulley. <Ref. to ME(SOHC)-45, REMOVAL, Crankshaft Pulley.>
3) Remove the belt cover (LH).
4) Remove the front belt cover.

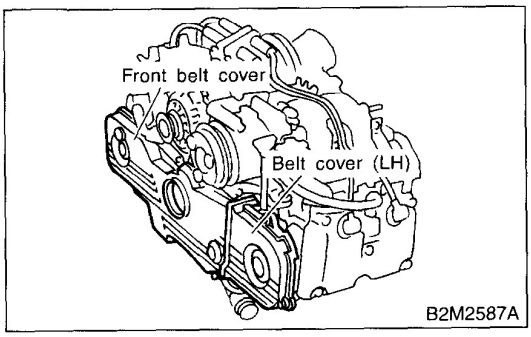

B: INSTALLATION

1) Install the front belt cover.

Tightening torque:
5 N·m (0.5 kgf-m, 3.6 ft-lb)

2) Install the belt cover (LH).

Tightening torque:
5 N·m (0.5 kgf-m, 3.6 ft-lb)

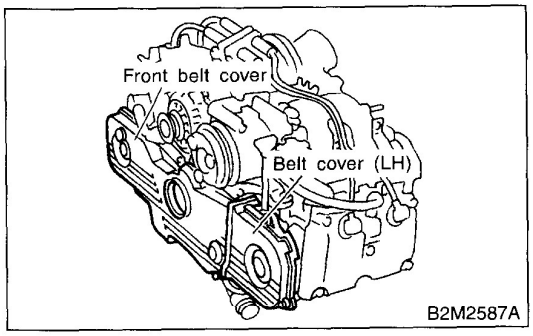

3) Install the crankshaft pulley. <Ref. to ME(SOHC)-45, INSTALLATION, Crankshaft Pulley.>
4) Install the V-belt. <Ref. to ME(SOHC)-43, INSTALLATION, V-belt.>

C: INSPECTION

Make sure the cover is not damaged.

GETtheMANUALS.org

15.Timing Belt Assembly

A: REMOVAL

1. TIMING BELT

1) Remove the V-belt. <Ref. to ME(SOHC)-43, REMOVAL, V-belt.>
2) Remove the crankshaft pulley. <Ref. to ME(SOHC)-45, REMOVAL, Crankshaft Pulley.>
3) Remove the belt cover. <Ref. to ME(SOHC)-46, REMOVAL, Belt Cover.>
4) Remove the timing belt guide. (MT vehicle only)

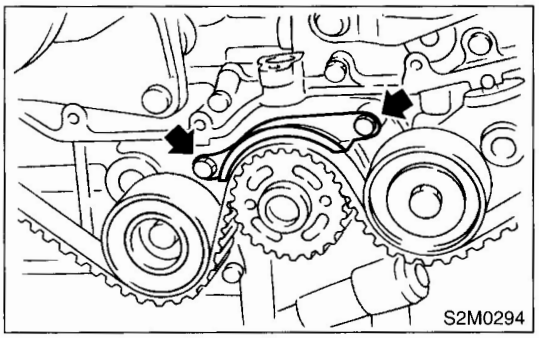
S2M0294

5) If the alignment mark (a) and/or arrow mark (which indicates rotation direction) on timing belt fade away, put new marks before removing the timing belt as shown in procedures below:
   (1) Turn the crankshaft using ST. Align mark (a) of sprocket to cylinder block notch (b) and ensure that right side cam sprocket mark (c), cam cap and cylinder head matching surface (d) and/or left side cam sprocket mark (e) and belt cover notch (f) are properly adjusted.

ST 499987500 CRANKSHAFT SOCKET

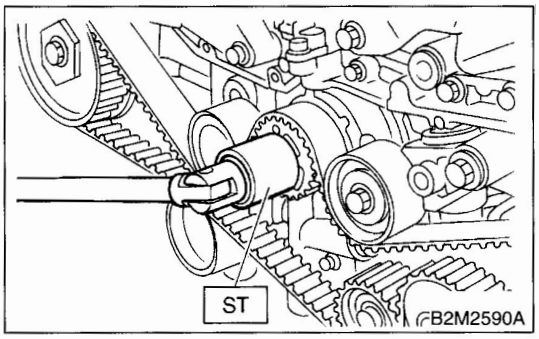

B2M2590A

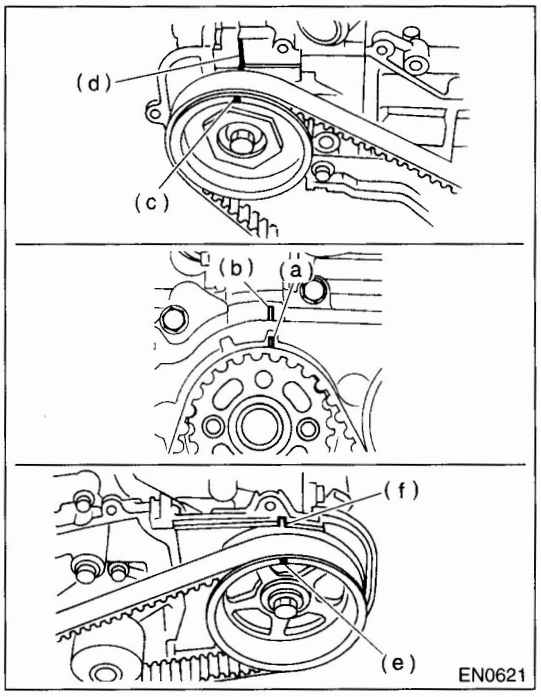

EN0621

(2) Using white paint, put alignment and/or arrow marks on the timing belts in relation to the crank sprocket and cam sprockets.

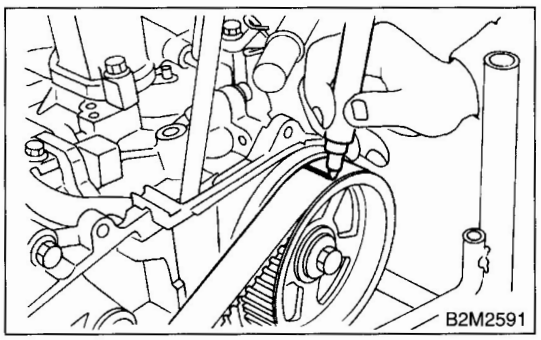
B2M2591

Specified data:
Z_1: 44 tooth length
Z_2: 40.5 tooth length

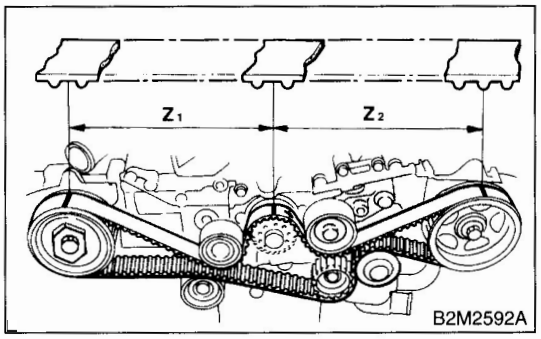

B2M2592A

6) Remove the belt idler (No. 2).

GETtheMANUALS.org

7) Remove the belt idler No. 2.

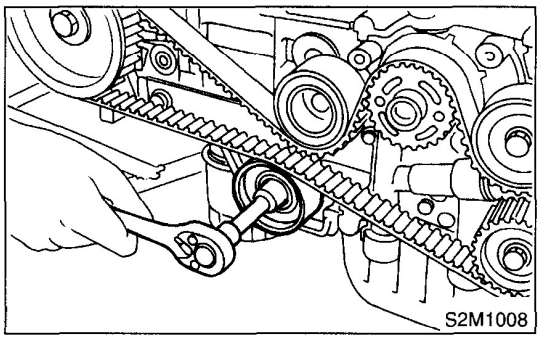
S2M1008

8) Remove the timing belt.

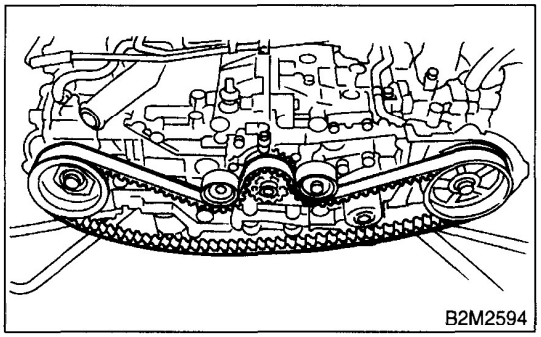
B2M2594

2. BELT IDLER AND AUTOMATIC BELT TENSION ADJUSTER ASSEMBLY

1) Remove the belt idler (No. 1).

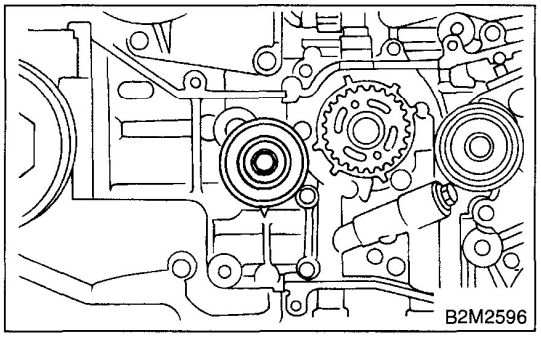
B2M2596

2) Remove the automatic belt tension adjuster assembly.

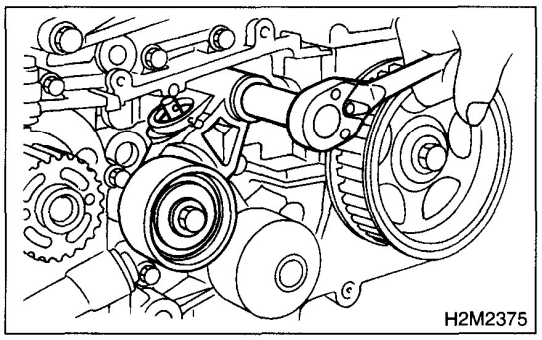
H2M2375

B: INSTALLATION

1. AUTOMATIC BELT TENSION ADJUSTER ASSEMBLY AND BELT IDLER

1) Preparation for installation of automatic belt tension adjuster assembly:

CAUTION:
• Always use a vertical type pressing tool to move the adjuster rod down.
• Do not use a lateral type vise.
• Push the adjuster rod vertically.
• Be sure to slowly move the adjuster rod down applying a pressure of 294 N (30 kgf, 66 lb).
• Press-in the push adjuster rod gradually taking more than three minutes.
• Do not allow press pressure to exceed 9,807 N (1,000 kgf, 2,205 lb).
• Press the adjuster rod as far as the end surface of the cylinder. Do not press the adjuster rod into the cylinder. Doing so may damage the cylinder.
• Do not release the press pressure until stopper pin is completely inserted.

(1) Attach the automatic belt tension adjuster assembly to the vertical pressing tool.
(2) Slowly move the adjuster rod down with a pressure of 294 N (30 kgf, 66 lb) until the adjuster rod is aligned with the stopper pin hole in the cylinder.

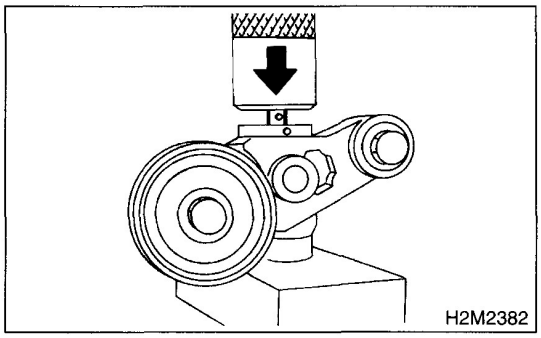
H2M2382

(3) With a 2 mm (0.08 in) dia. stopper pin or a 2 mm (0.08 in) (nominal) dia. hex bar wrench inserted into the stopper pin hole in the cylinder, secure the adjuster rod.

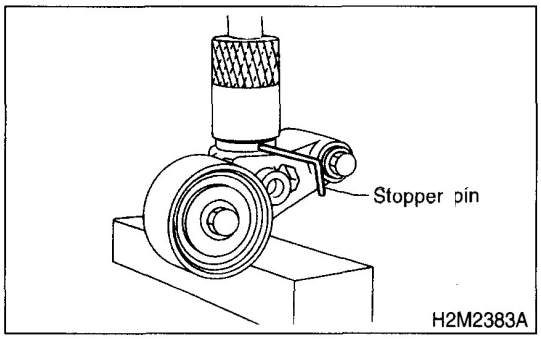

H2M2383A

GETtheMANUALS.org

2) Install the automatic belt tension adjuster assembly.

Tightening torque:
25 N·m (2.5 kgf-m, 18.4 ft-lb)

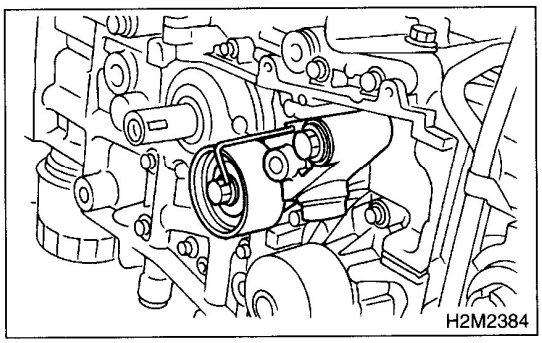
H2M2384

3) Install the belt idler (No. 1).

Tightening torque:
39 N·m (4.0 kgf-m, 28.9 ft-lb)

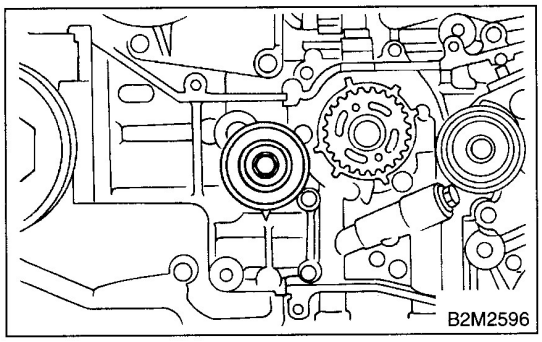
B2M2596

2. TIMING BELT

1) Preparation for installation of automatic belt tension adjuster assembly. <Ref. to ME(SOHC)-48, AUTOMATIC BELT TENSION ADJUSTER ASSEMBLY AND BELT IDLER, INSTALLATION, Timing Belt Assembly.>

2) Installation of timing belt:

(1) Turn the camshaft sprocket No. 2 using ST1, and turn the camshaft sprocket No. 1 using ST2 so that their alignment marks (A) come to top positions.

ST1	499207100	CAMSHAFT SPROCKET WRENCH
ST2	499207400	CAMSHAFT SPROCKET WRENCH

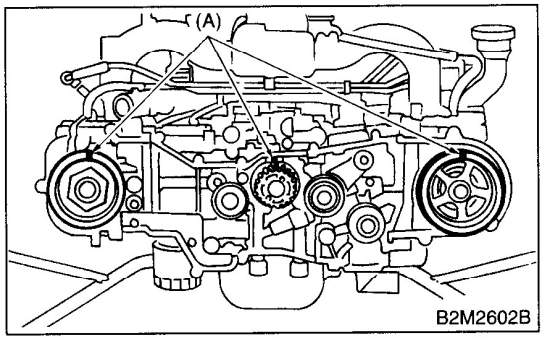

B2M2602B

(2) While aligning alignment mark (B) on the timing belt with marks (A) on sprockets, position the timing belt properly.

CAUTION:
Ensure the belt's rotating direction is correct.

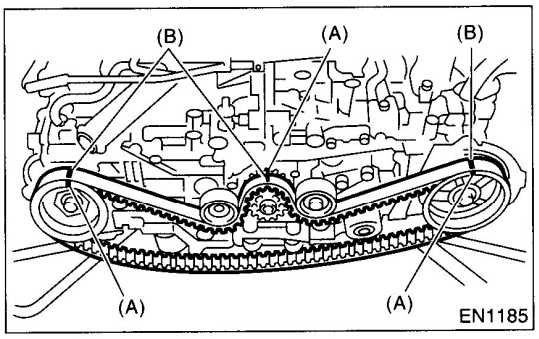

EN1185

3) Install the belt idler No. 2.

Tightening torque:
39 N·m (4.0 kgf-m, 28.9 ft-lb)

GETtheMANUALS.org

4) Install the belt idler (No. 2).

Tightening torque:
39 N·m (4.0 kgf-m, 28.9 ft-lb)

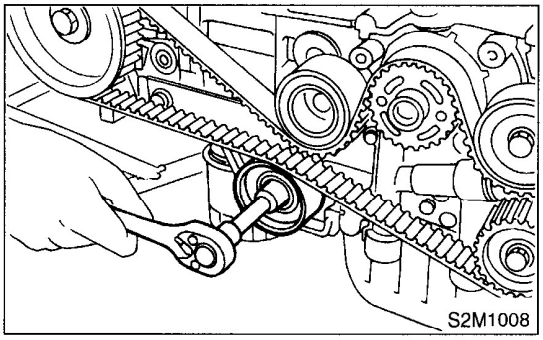
S2M1008

5) After ensuring that the marks on the timing belt and camshaft sprockets are aligned, remove the stopper pin from belt tensioner adjuster.

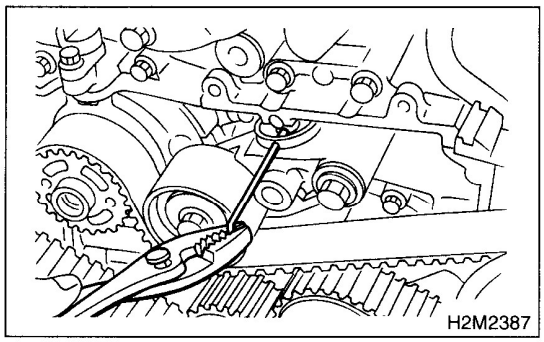
H2M2387

6) Install the timing belt guide. (MT vehicles only)
(1) Temporarily tighten the remaining bolts.

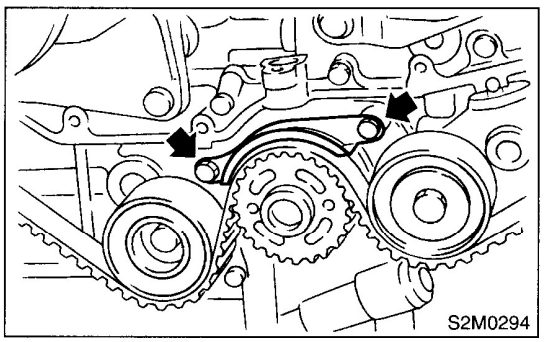
S2M0294

(2) Check and adjust the clearance between timing belt and timing belt guide by using thickness gauge.

Clearance:
1.0±0.5 mm (0.039±0.020 in)

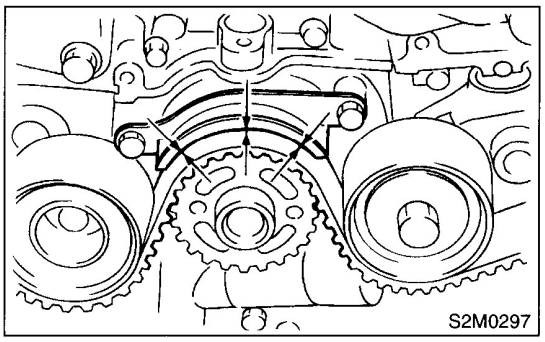
S2M0297

(3) Tighten the remaining bolts.

Tightening torque:
9.8 N·m (1.0 kgf-m, 7.2 ft-lb)

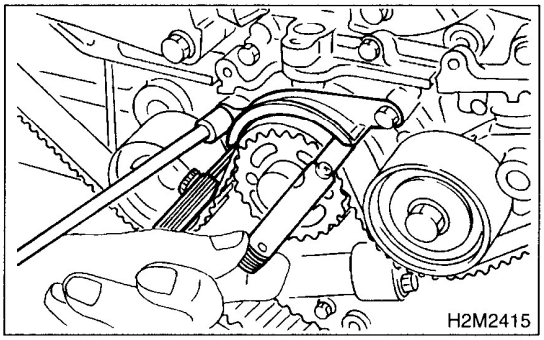
H2M2415

7) Install the belt cover. <Ref. to ME(SOHC)-46, INSTALLATION, Belt Cover.>
8) Install the crankshaft pulley. <Ref. to ME(SOHC)-45, REMOVAL, Crankshaft Pulley.>
9) Install the V-belt. <Ref. to ME(SOHC)-43, INSTALLATION, V-belt.>

GETtheMANUALS.org

C: INSPECTION

1. TIMING BELT

1) Check the timing belt teeth for breaks, cracks, and wear. If any fault is found, replace the belt.
2) Check the condition of back side of belt; if any crack is found, replace the belt.

CAUTION:
• Be careful not to let oil, grease or coolant contact the belt. Remove quickly and thoroughly if this happens.
• Do not bend the belt sharply.

Bending radius: h
60 mm (2.36 in) or more

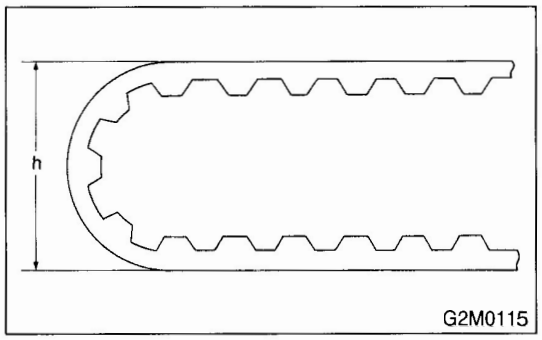

2. AUTOMATIC BELT TENSION ADJUSTER

1) Visually check the oil seals for leaks, and rod ends for abnormal wear or scratches. If necessary, replace the faulty parts.

CAUTION:
Slight traces of oil at rod's oil seal does not indicate a problem.

2) Check that the adjuster rod does not move when a pressure of 294 N (30 kgf, 66 lb) is applied to it. This is to check adjuster rod stiffness.
3) If the adjuster rod is not stiff and moves freely when applying 294 N (30 kgf, 66 lb), check it using the following procedures:
(1) Slowly press the adjuster rod down to the end surface of the cylinder. Repeat this motion 2 or 3 times.
(2) With the adjuster rod moved all the way up, apply a pressure of 294 N (30 kgf, 66 lb) to it. Check the adjuster rod stiffness.
(3) If the adjuster rod is not stiff and moves down, replace the automatic belt tension adjuster assembly with a new one.

CAUTION:
• Always use a vertical type pressing tool to move the adjuster rod down.
• Do not use a lateral type vise.
• Push the adjuster rod vertically.
• Press-in the push adjuster rod gradually taking more than three minutes.
• Do not allow press pressure to exceed 9,807 N (1,000 kgf, 2,205 lb).
• Press the adjuster rod as far as the end surface of the cylinder. Do not press the adjuster rod into the cylinder. Doing so may damage the cylinder.

4) Measure the extension of rod beyond the body. If it is not within specifications, replace with a new one.

Rod extension: H
5.7±0.5 mm (0.224±0.020 in)

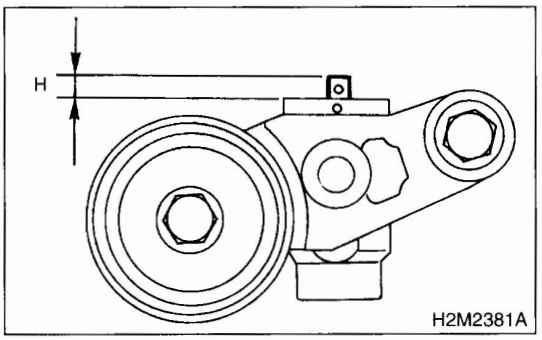

3. BELT TENSION PULLEY

1) Check the mating surfaces of timing belt and contact point of adjuster rod for abnormal wear or scratches. Replace the automatic belt tension adjuster assembly if faulty.
2) Check the tension pulley for smooth rotation. Replace if noise or excessive play is noted.
3) Check the tension pulley for grease leakage.

4. BELT IDLER

1) Check the belt idler for smooth rotation. Replace if noise or excessive play is noted.
2) Check the belt outer contacting surfaces of idler pulley for abnormal wear and scratches.
3) Check the belt idler for grease leakage.

GETtheMANUALS.org

16.Camshaft Sprocket

A: REMOVAL

1. REMOVAL

1) Remove the V-belt. <Ref. to ME(SOHC)-43, REMOVAL, V-belt.>
2) Remove the crankshaft pulley. <Ref. to ME(SOHC)-45, REMOVAL, Crankshaft Pulley.>
3) Remove the belt cover. <Ref. to ME(SOHC)-46, REMOVAL, Belt Cover.>
4) Remove the timing belt assembly. <Ref. to ME(SOHC)-47, REMOVAL, Timing Belt Assembly.>
5) Remove the camshaft position sensor. <Ref. to FU(SOHC)-29, REMOVAL, Camshaft Position Sensor.>
6) Remove the camshaft sprocket No. 2. To lock the camshaft, use ST.

ST 499207100 CAMSHAFT SPROCKET WRENCH

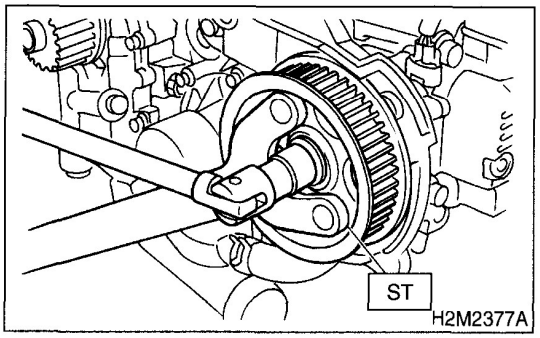

7) Remove the camshaft sprocket No. 1. To lock the camshaft, use ST.

ST 499207400 CAMSHAFT SPROCKET WRENCH

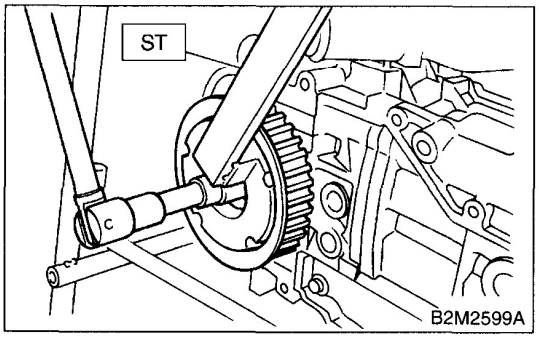

B: INSTALLATION

1) Install the camshaft sprocket No. 1. To lock the camshaft, use ST.

ST 499207400 CAMSHAFT SPROCKET WRENCH

Tightening torque:
78 N·m (8.0 kgf-m, 57.9 ft-lb)

CAUTION:
Do not confuse left and right side camshaft sprockets during installation. The camshaft sprocket No. 2 is identified by a projection used to monitor camshaft position sensor.

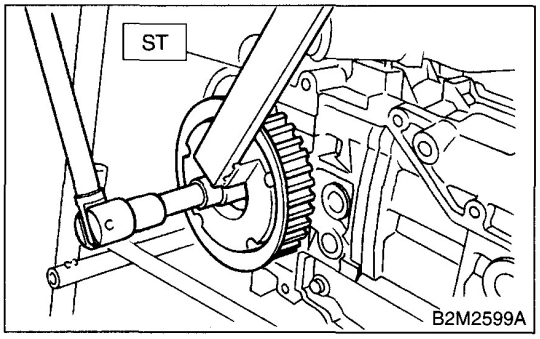

2) Install the camshaft sprocket No. 2. To lock the camshaft, use ST.

ST 499207100 CAMSHAFT SPROCKET WRENCH

Tightening torque:
78 N·m (8.0 kgf-m, 57.9 ft-lb)

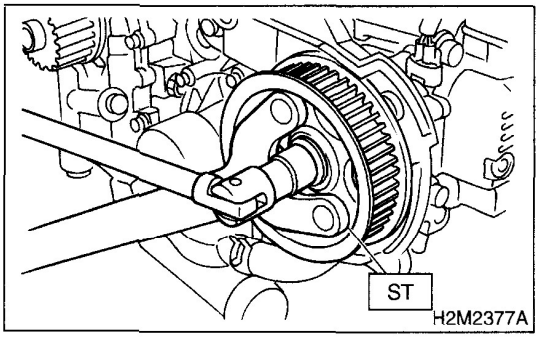

3) Install the camshaft position sensor. <Ref. to FU(SOHC)-29, INSTALLATION, Camshaft Position Sensor.>
4) Install the timing belt assembly. <Ref. to ME(SOHC)-48, INSTALLATION, Timing Belt Assembly.>
5) Install the belt cover. <Ref. to ME(SOHC)-46, INSTALLATION, Belt Cover.>
6) Install the crankshaft pulley. <Ref. to ME(SOHC)-45, INSTALLATION, Crankshaft Pulley.>
7) Install the V-belt. <Ref. to ME(SOHC)-43, INSTALLATION, V-belt.>

GETtheMANUALS.org

C: INSPECTION

1) Check the sprocket teeth for abnormal wear and scratches.
2) Make sure there is no free play between sprocket and key.
3) Check the camshaft sprocket notch used for sensor for damage and contamination of foreign matter.

GETthisMANUALS.org

17.Crankshaft Sprocket

A: REMOVAL

1) Remove the V-belt. <Ref. to ME(SOHC)-43, REMOVAL, V-belt.>
2) Remove the crankshaft pulley. <Ref. to ME(SOHC)-45, REMOVAL, Crankshaft Pulley.>
3) Remove the belt cover. <Ref. to ME(SOHC)-46, REMOVAL, Belt Cover.>
4) Remove the timing belt assembly. <Ref. to ME(SOHC)-47, REMOVAL, Timing Belt Assembly.>
5) Remove the camshaft sprocket. <Ref. to ME(SOHC)-52, REMOVAL, Camshaft Sprocket.>
6) Remove the crankshaft sprocket.

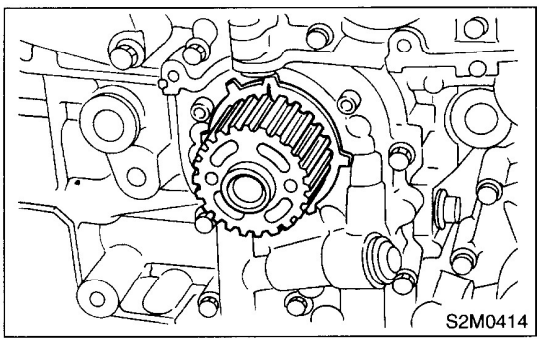

B: INSTALLATION

1) Install the crankshaft sprocket.

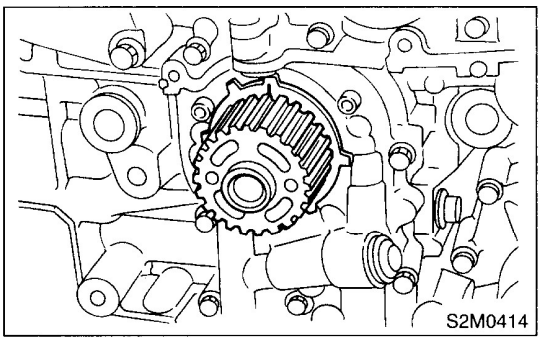

2) Install the camshaft sprocket. <Ref. to ME(SOHC)-52, INSTALLATION, Camshaft Sprocket.>
3) Install the timing belt assembly. <Ref. to ME(SOHC)-48, INSTALLATION, Timing Belt Assembly.>
4) Install the belt cover. <Ref. to ME(SOHC)-46, INSTALLATION, Belt Cover.>
5) Install the crankshaft pulley. <Ref. to ME(SOHC)-45, INSTALLATION, Crankshaft Pulley.>
6) Install the V-belt. <Ref. to ME(SOHC)-43, INSTALLATION, V-belt.>

C: INSPECTION

1) Check the sprocket teeth for abnormal wear and scratches.
2) Make sure there is no free play between sprocket and key.
3) Check the crankshaft sprocket notch used for sensor for damage and contamination of foreign matter.

GETthisMANUALS.org

18.Valve Rocker Assembly

A: REMOVAL

1) Remove the V-belt. <Ref. to ME(SOHC)-43, REMOVAL, V-belt.>
2) Remove the crankshaft pulley. <Ref. to ME(SOHC)-45, REMOVAL, Crankshaft Pulley.>
3) Remove the belt cover. <Ref. to ME(SOHC)-46, REMOVAL, Belt Cover.>
4) Remove the timing belt assembly. <Ref. to ME(SOHC)-47, REMOVAL, Timing Belt Assembly.>
5) Remove the camshaft sprocket. <Ref. to ME(SOHC)-52, REMOVAL, Camshaft Sprocket.>
6) Disconnect the PCV hose and remove the rocker cover.
7) Removal of valve rocker assembly:
   (1) Remove the bolts (a) through (h) in alphabetical sequence.

CAUTION:
Leave two or three threads of bolts (g and h) engaged to retain the valve rocker assembly.

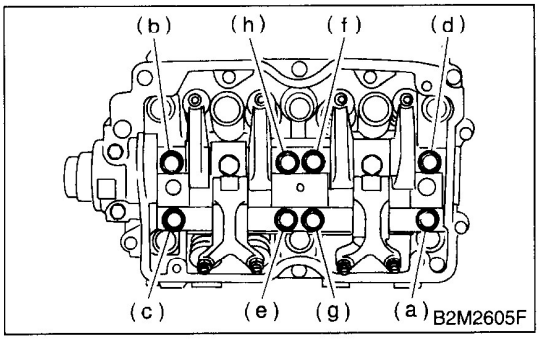

   (2) Remove the valve rocker assembly.

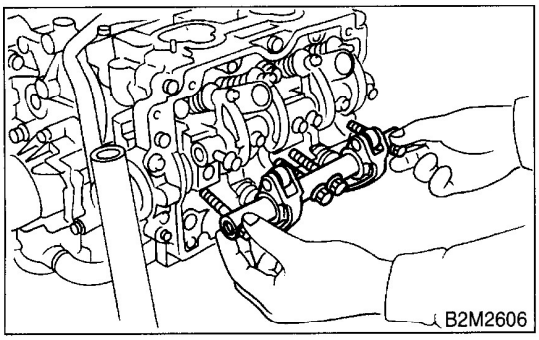

B: INSTALLATION

1) Installation of valve rocker assembly:
   (1) Temporarily tighten the bolts (a) through (d) equally as shown in figure.

CAUTION:
Do not allow the valve rocker assembly to gouge knock pins.

   (2) Tighten the bolts (e) through (h) to specified torque.
   (3) Tighten the bolts (a) through (d) to specified torque.

Tightening torque:
25 N·m (2.5 kgf-m, 18.1 ft-lb)

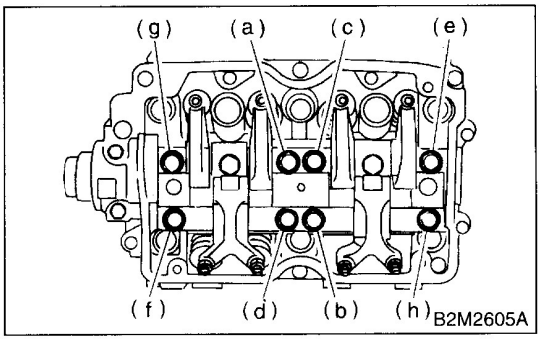

2) Adjust the valve clearances. <Ref. to ME(SOHC)-31, ADJUSTMENT, Valve Clearance.>
3) Install the rocker cover and connect PCV hose.
4) Install the camshaft sprocket. <Ref. to ME(SOHC)-52, INSTALLATION, Camshaft Sprocket.>
5) Install the timing belt assembly. <Ref. to ME(SOHC)-48, INSTALLATION, Timing Belt Assembly.>
6) Install the belt cover. <Ref. to ME(SOHC)-46, INSTALLATION, Belt Cover.>
7) Install the crankshaft pulley. <Ref. to ME(SOHC)-45, INSTALLATION, Crankshaft Pulley.>
8) Install the V-belt. <Ref. to ME(SOHC)-43, INSTALLATION, V-belt.>

C: DISASSEMBLY

1) Remove the bolts which secure the rocker shaft.
2) Extract the rocker shaft. Remove the valve rocker arms, springs and shaft supports from rocker shaft.

CAUTION:
Arrange all removed parts in order so that they can be installed in their original positions.

3) Remove the nut and adjuster screw from valve rocker.

D: ASSEMBLY

1) Install the adjuster screw and nut to valve rocker.
2) Arrange the valve rocker arms, springs and shaft supports in assembly order and insert the valve rocker shaft.

Tightening torque (Shaft supports installing bolts):
5 N·m (0.5 kgf-m, 3.6 ft-lb)

CAUTION:
Valve rocker arms, rocker shaft and shaft supports have identification marks. Ensure the parts with same markings are properly assembled.

3) Install the valve rocker shaft securing bolts.

GETMANUALS.org

E: INSPECTION

1. VALVE ROCKER ARM

1) Measure the inside diameter of valve rocker arm and outside diameter of valve rocker shaft, and determine the difference between the two (= oil clearance).

Clearance between arm and shaft:
Standard
0.020 — 0.054 mm (0.0008 — 0.0021 in)
Limit
0.10 mm (0.0039 in)

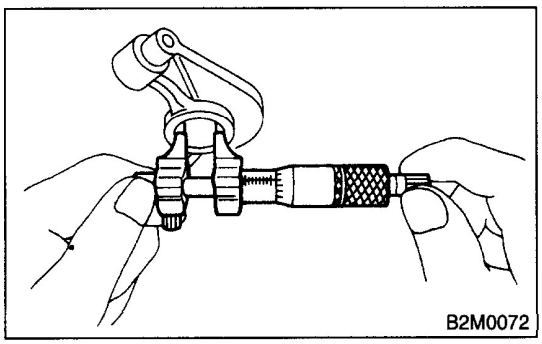
B2M0072

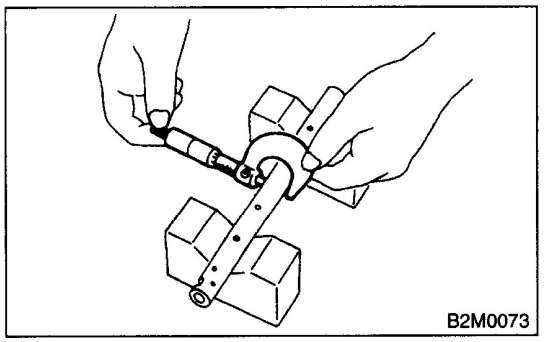
B2M0073

2) If the oil clearance exceeds the limit, replace the valve rocker arm or shaft, whichever shows greater amount of wear.

Rocker arm inside diameter:
22.020 — 22.041 mm (0.8669 — 0.8678 in)

Rocker shaft diameter:
21.987 — 22.000 mm (0.8656 — 0.8661 in)

3) Measure the inside diameter of rocker shaft support and outside diameter of valve rocker shaft, and determine the difference between the two (= oil clearance).

Clearance between support and shaft:
Standard
0.005 — 0.039 mm (0.0002 — 0.0015 in)
Limit
0.05 mm (0.0020 in)

4) If the oil clearance exceeds the limit, replace the rocker shaft support or shaft, whichever shows greater amount of wear.

Rocker shaft support inside diameter:
22.005 — 22.026 mm (0.8663 — 0.8672 in)

Rocker shaft diameter:
21.987 — 22.000 mm (0.8656 — 0.8661 in)

5) If the cam or valve contact surface of valve rocker arm is worn or dented excessively, replace the valve rocker arm.
6) Check that the valve rocker arm roller rotates smoothly. If not, replace the valve rocker arm.

2. INTAKE AND EXHAUST VALVE ROCKER SHAFT

Visually check the oil relief valve of shaft end for any of the following abnormalities:
- Breaks in check ball body
- Foreign particles caught in valve spring
- Oil leakage at check ball

CAUTION:
Repair or replace the valve rocker shaft as necessary.

GETMANUALS.org

19.Camshaft

A: REMOVAL

1) Remove the V-belt. <Ref. to ME(SOHC)-43, INSTALLATION, V-belt.>
2) Remove the crankshaft pulley. <Ref. to ME(SOHC)-45, REMOVAL, Crankshaft Pulley.>
3) Remove the belt cover. <Ref. to ME(SOHC)-46, REMOVAL, Belt Cover.>
4) Remove the timing belt assembly. <Ref. to ME(SOHC)-47, REMOVAL, Timing Belt Assembly.>
5) Remove the camshaft sprocket. <Ref. to ME(SOHC)-52, REMOVAL, Camshaft Sprocket.>
6) Remove the crankshaft sprocket. <Ref. to ME(SOHC)-54, REMOVAL, Crankshaft Sprocket.>
7) Remove the belt cover No. 2 (RH).
8) Remove the tensioner bracket.

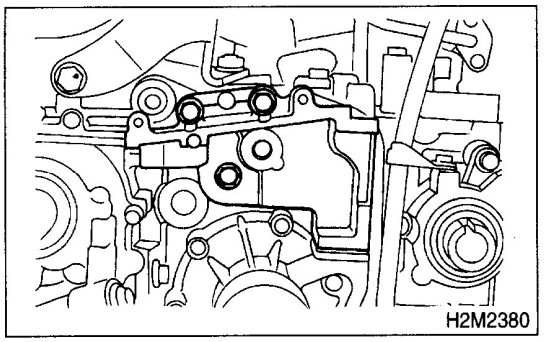
H2M2380

9) Remove the belt cover No. 2 (LH).

CAUTION:
Do not damage or lose the seal rubber when removing the belt covers.

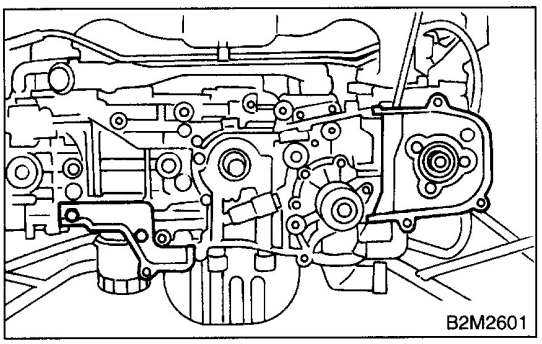
B2M2601

10) Remove the camshaft position sensor support. (LH side only)
11) Remove the oil level gauge guide. (LH side only)
12) Remove the valve rocker assembly. <Ref. to ME(SOHC)-55, REMOVAL, Valve Rocker Assembly.>
13) Remove the camshaft cap.
(1) Remove the bolts (a) through (b) in alphabetical sequence.

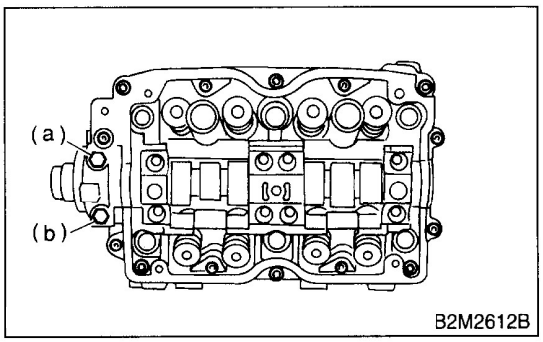

B2M2612B

(2) Equally loosen the bolts (c) through (j) all the way in alphabetical sequence.

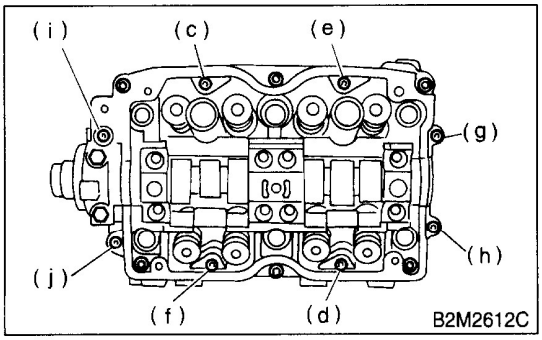

B2M2612C

(3) Remove the bolts (k) through (p) in alphabetical sequence using ST.
ST 499497000 TORX PLUS

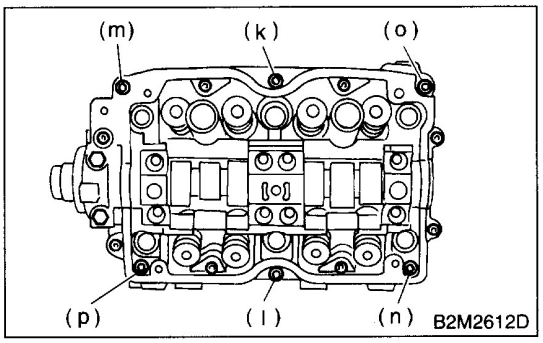

B2M2612D

(4) Remove the camshaft cap.

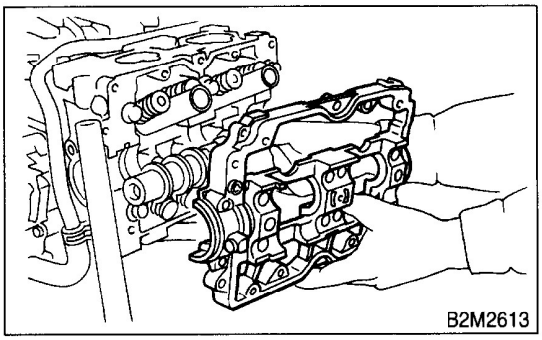
B2M2613

14) Remove the camshaft.
15) Remove the oil seal.

GETMANUALS.org

16) Remove the plug from rear side of camshaft.

CAUTION:
- **Do not remove the oil seal unless necessary.**
- **Do not scratch the journal surface when removing the oil seal.**

B: INSTALLATION

1) Apply a coat of engine oil to camshaft journals and install the camshaft.
2) Install the camshaft cap.
   (1) Apply liquid gasket on the periphery of camshaft cap.

Liquid gasket:
THREE BOND 1280B
P/N K0877YA018

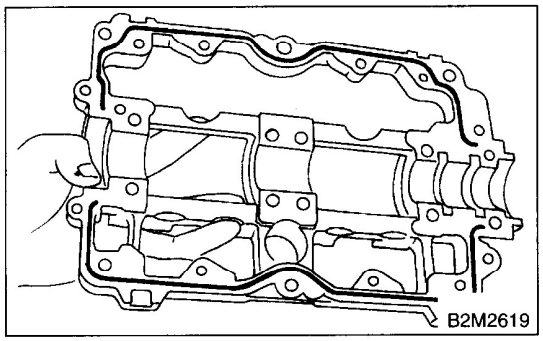

NOTE:
Apply a coat of 3 mm (0.12 in) dia. (A): liquid gasket along edge (B) of camshaft cap (C) mating surface.

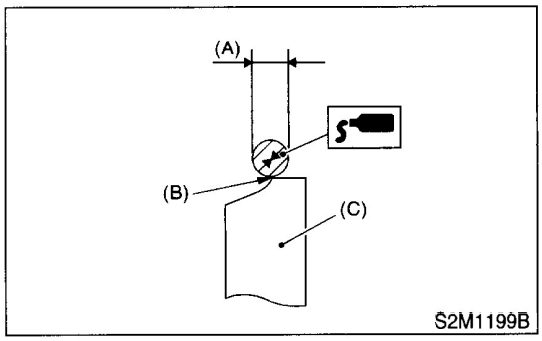

(2) Temporarily tighten the bolts (g) through (j) in alphabetical sequence.

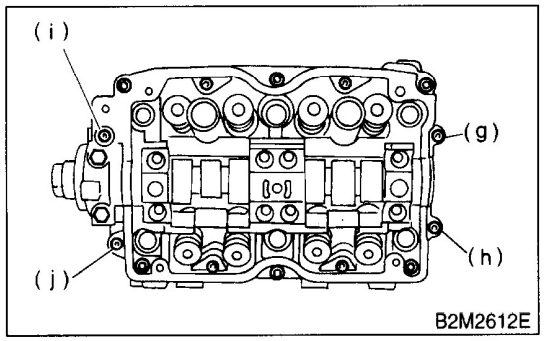

(3) Install the valve rocker assembly.

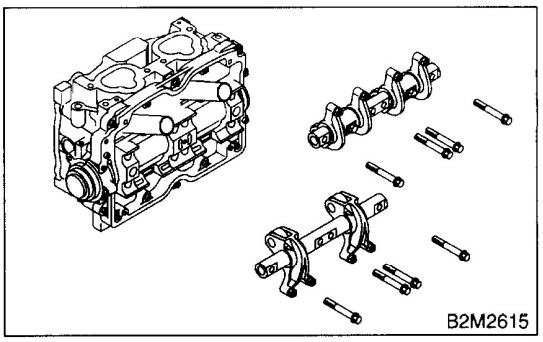

(4) Tighten the bolts (a) through (h) in alphabetical sequence.

Tightening torque:
25 N·m (2.5 kgf-m, 18.1 ft-lb)

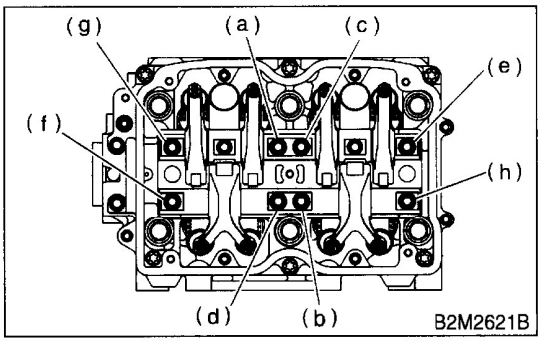

(5) Tighten the TORX bolts (i) through (n) in alphabetical sequence using ST.
ST 499427000 TORX PLUS

Tightening torque:
18 N·m (1.8 kgf-m, 13.0 ft-lb)

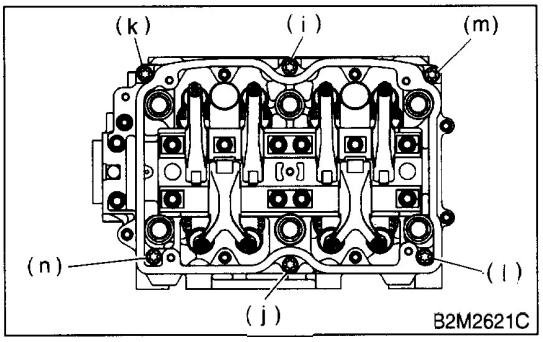

GETMANUALS.org

(6) Tighten the bolts (o) through (v) in alphabetical sequence.

Tightening torque:
10 N·m (1.0 kgf-m, 7.2 ft-lb)

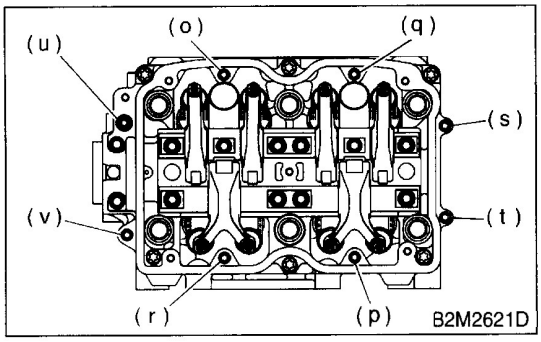

(7) Tighten the bolts (w) through (x) in alphabetical sequence.

Tightening torque:
10 N·m (1.0 kgf-m, 7.2 ft-lb)

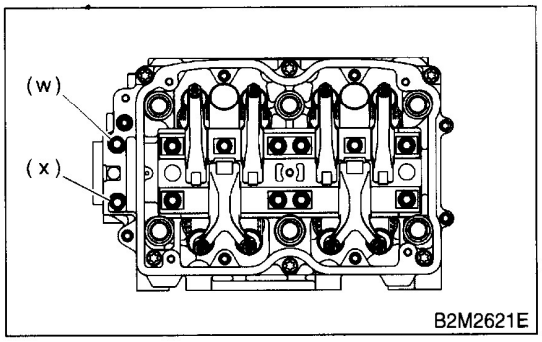

3) Apply a coat of grease to oil seal lips and install the oil seal (A) on camshaft using ST1 and ST2.

CAUTION:
Use a new oil seal.

ST1 499597000 OIL SEAL GUIDE
ST2 499587500 OIL SEAL INSTALLER

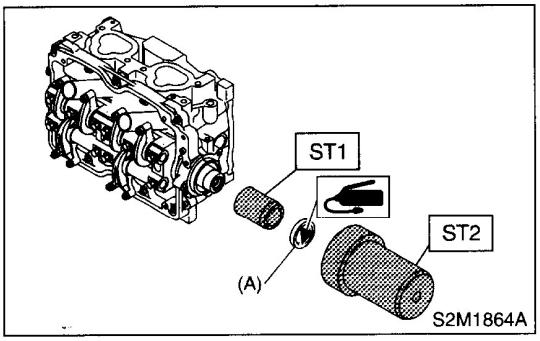

4) Install the plug using ST.
ST 499587700 OIL SEAL INSTALLER
5) Adjust the valve clearance. <Ref. to ME(SOHC)-31, ADJUSTMENT, Valve Clearance.>
6) Install the rocker cover and connect PCV hose.
7) Install the oil level gauge guide. (LH side only)
8) Install the camshaft position sensor support. (LH side only)
9) Install the belt cover No. 2 (RH).

Tightening torque:
5 N·m (0.5 kgf-m, 3.6 ft-lb)

10) Install the belt cover No. 2 (LH).

Tightening torque:
5 N·m (0.5 kgf-m, 3.6 ft-lb)

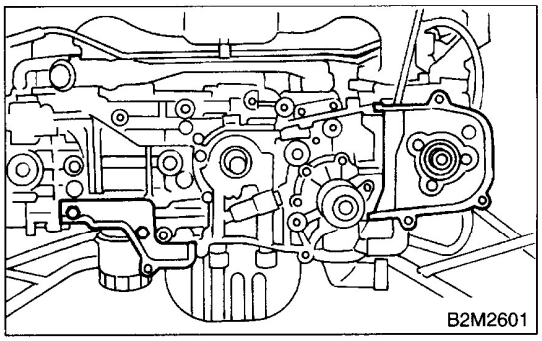

11) Install the tensioner bracket.

Tightening torque:
25 N·m (2.5 kgf-m, 18.1 ft-lb)

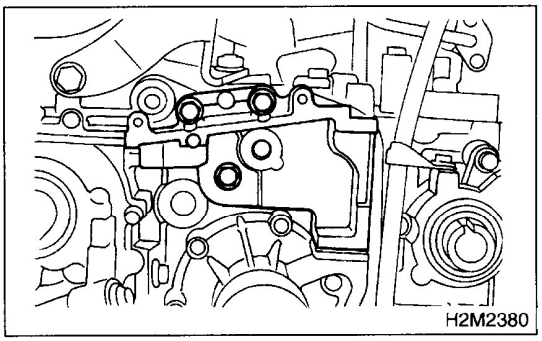

12) Install the crankshaft sprocket. <Ref. to ME(SOHC)-54, INSTALLATION, Crankshaft Sprocket.>
13) Install the camshaft sprocket. <Ref. to ME(SOHC)-52, INSTALLATION, Camshaft Sprocket.>
14) Install the timing belt assembly. <Ref. to ME(SOHC)-48, INSTALLATION, Timing Belt Assembly.>
15) Install the belt cover. <Ref. to ME(SOHC)-46, INSTALLATION, Belt Cover.>
16) Install the crankshaft pulley. <Ref. to ME(SOHC)-45, INSTALLATION, Crankshaft Pulley.>
17) Install the V-belt. <Ref. to ME(SOHC)-43, INSTALLATION, V-belt.>

GETMANUALS.org

C: INSPECTION

1. CAMSHAFT

1) Measure the bend, and repair or replace if necessary.

Limit:
0.025 mm (0.0010 in)

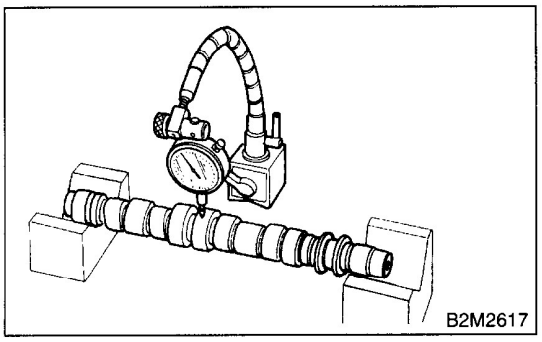

2) Check the journal for damage and wear. Replace if faulty.
3) Measure the outside diameter of camshaft journal and inside diameter of cylinder head journal, and determine the difference between the two (= oil clearance). If the oil clearance exceeds specifications, replace the camshaft or cylinder head as necessary.

		Unit: mm (in)
Clearance at journal	Standard	0.055 — 0.090 (0.0022 — 0.0035)
	Limit	0.10 (0.0039)
Camshaft journal O.D.		31.928 — 31.945 (1.2570 — 1.2577)
Journal hole I.D.		32.000 — 32.018 (1.2598 — 1.2605)

4) Check the cam face condition; remove the minor faults by grinding with oil stone. Measure the cam height H; replace if the limit has been exceeded.

Cam height: H

Item		Unit: mm (in)
Intake	STD	39.485 — 39.585 (1.5545 — 1.5585)
	Limit	39.385 (1.5506)
Exhaust	STD	39.257 — 39.357 (1.5455 — 1.5495)
	Limit	39.157 (1.5416)

Cam base circle diameter A:
IN: 34.00 mm (1.3386 in)
EX: 34.00 mm (1.3386 in)

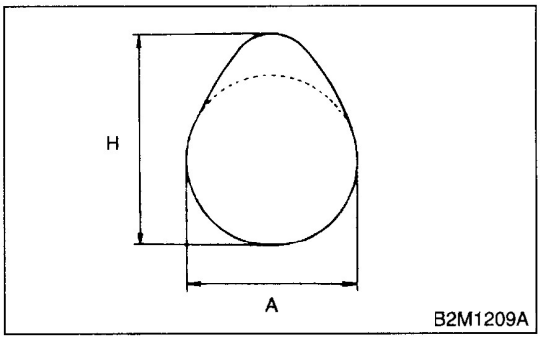

2. CAMSHAFT SUPPORT

Measure the thrust clearance of camshaft with dial gauge. If the clearance exceeds the limit, replace the camshaft support.

Standard:
0.030 — 0.090 mm (0.0012 — 0.0035 in)

Limit:
0.10 mm (0.0039 in)

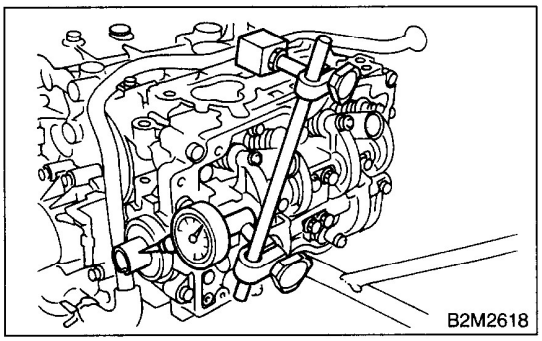

GETmanuals.org

20.Cylinder Head Assembly

A: REMOVAL

1) Remove the V-belt. <Ref. to ME(SOHC)-43, REMOVAL, V-belt.>
2) Remove the crankshaft pulley. <Ref. to ME(SOHC)-45, REMOVAL, Crankshaft Pulley.>
3) Remove the belt cover. <Ref. to ME(SOHC)-46, REMOVAL, Belt Cover.>
4) Remove the timing belt assembly. <Ref. to ME(SOHC)-47, REMOVAL, Timing Belt Assembly.>
5) Remove the camshaft sprocket. <Ref. to ME(SOHC)-52, REMOVAL, Camshaft Sprocket.>
6) Remove the intake manifold. <Ref. to FU(SOHC)-15, REMOVAL, Intake Manifold.>
7) Remove the bolt which installs the A/C compressor bracket on cylinder head.
8) Remove the valve rocker assembly. <Ref. to ME(SOHC)-55, REMOVAL, Valve Rocker Assembly.>
9) Remove the camshaft. <Ref. to ME(SOHC)-57, REMOVAL, Camshaft.>
10) Remove the cylinder head bolts in alphabetical sequence shown in figure.

CAUTION:
Leave bolts (a) and (c) engaged by three or four threads to prevent the cylinder head from falling.

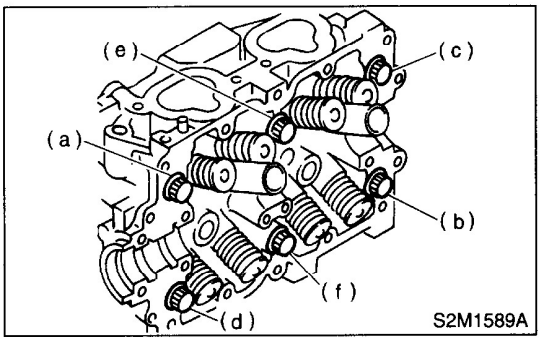

11) While tapping the cylinder head with a plastic hammer, separate it from cylinder block.
12) Remove the bolts (a) and (b) to remove the cylinder head.

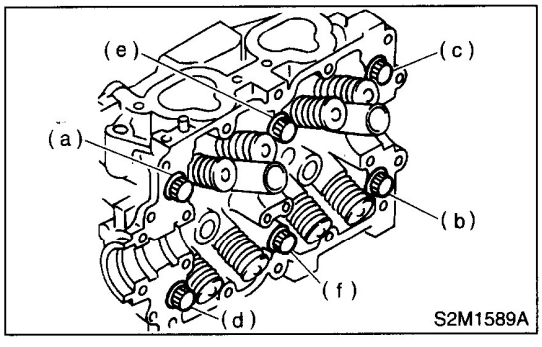

13) Remove the cylinder head gasket.

CAUTION:
Do not scratch the mating surface of cylinder head and cylinder block.

14) Similarly, remove the right side cylinder head.

B: INSTALLATION

1) Install the cylinder head and gaskets on cylinder block.

CAUTION:
- **Use new cylinder head gaskets.**
- **Be careful not to scratch the mating surface of cylinder block and cylinder head.**

2) Tighten the cylinder head bolts.
   (1) Apply a coat of engine oil to washers and bolt threads.
   (2) Tighten all bolts to 29 N·m (3.0 kgf-m, 22 ft-lb) in alphabetical sequence.
   Then tighten all bolts to 69 N·m (7.0 kgf-m, 51 ft-lb) in alphabetical sequence.
   (3) Back off all bolts by 180° first; back them off by 180° again.
   (4) Tighten the bolts (a) and (b) to 34 N·m (3.5 kgf-m, 25 ft-lb).
   (5) Tighten the bolts (c), (d), (e) and (f) to 15 N·m (1.5 kgf-m, 11 ft-lb).
   (6) Tighten all bolts by 80 to 90° in alphabetical sequence.

CAUTION:
Do not tighten the bolts more than 90°.

   (7) Further tighten all bolts by 80 to 90° in alphabetical sequence shown in the figure below.

CAUTION:
Ensure the total "re-tightening angle" [in the former two steps], do not exceed 180°.

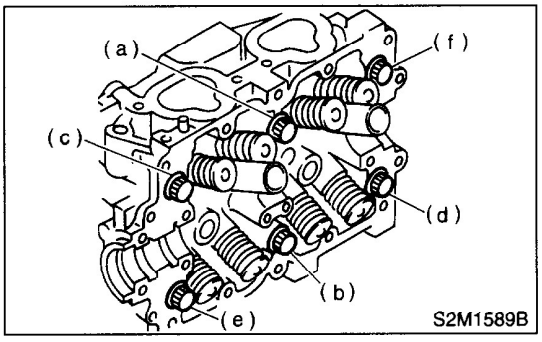

3) Install the camshaft. <Ref. to ME(SOHC)-58, INSTALLATION, Camshaft.>
4) Install the valve rocker assembly. <Ref. to ME(SOHC)-55, INSTALLATION, Valve Rocker Assembly.>
5) Install the A/C compressor bracket on cylinder head.

GETmanuals.org

6) Install the intake manifold. <Ref. to FU(SOHC)-17, INSTALLATION, Intake Manifold.>
7) Install the camshaft sprocket. <Ref. to ME(SOHC)-52, INSTALLATION, Camshaft Sprocket.>
8) Install the timing belt assembly. <Ref. to ME(SOHC)-48, INSTALLATION, Timing Belt Assembly.>
9) Install the belt cover. <Ref. to ME(SOHC)-46, INSTALLATION, Belt Cover.>
10) Install the crankshaft pulley. <Ref. to ME(SOHC)-45, INSTALLATION, Crankshaft Pulley.>
11) Install the V-belt. <Ref. to ME(SOHC)-43, INSTALLATION, V-belt.>

C: DISASSEMBLY

1) Place the cylinder head on ST.
ST 498267800 CYLINDER HEAD TABLE
2) Set the ST on valve spring. Compress the valve spring and remove the valve spring retainer key. Remove each valve and valve spring.
ST 499718000 VALVE SPRING REMOVER

CAUTION:
- **Mark each valve to prevent confusion.**
- **Use extreme care not to damage the lips of the intake valve oil seals and exhaust valve oil seals.**

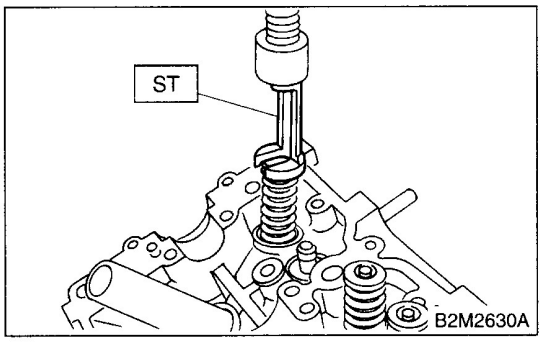

GETmanuals.org

D: ASSEMBLY

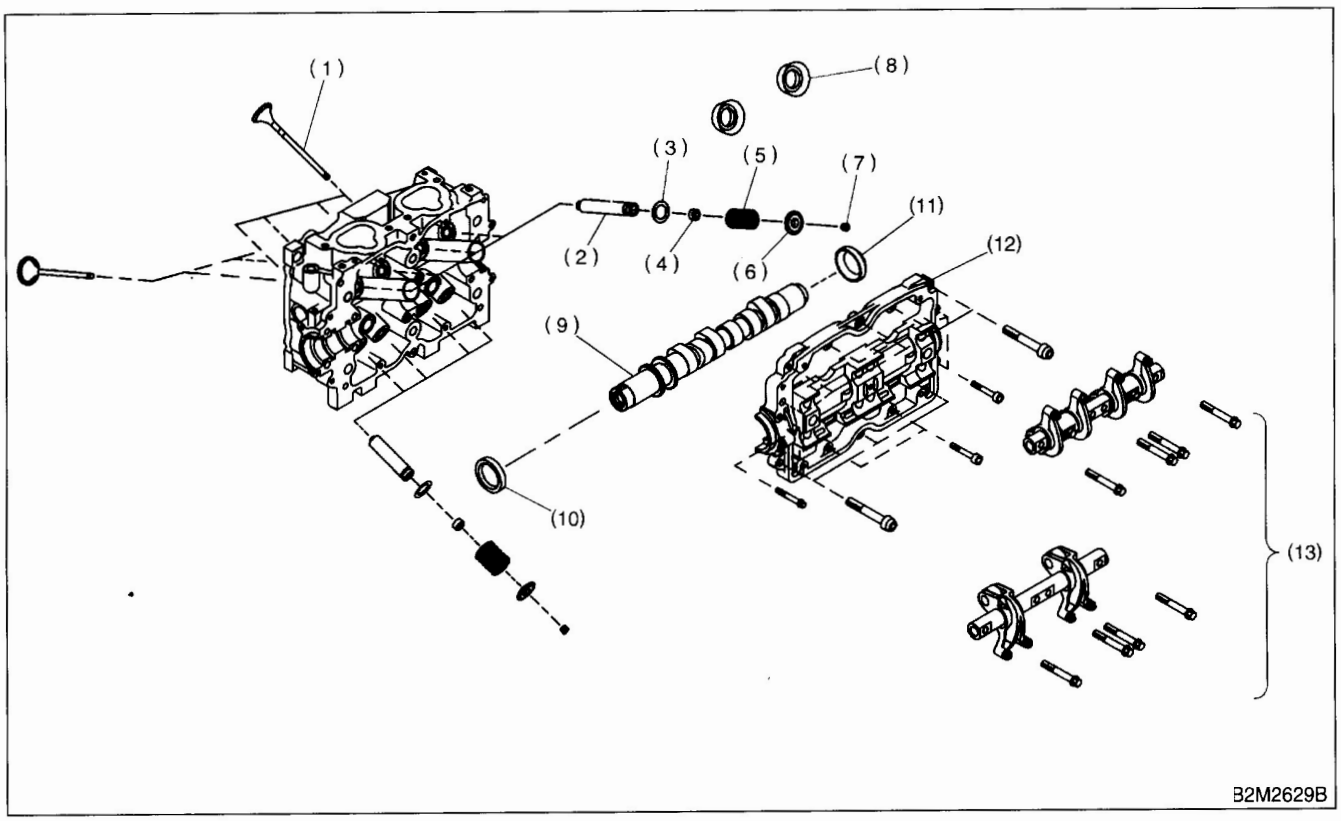

(1) Valve
(2) Valve guide
(3) Valve spring seat
(4) Oil seal
(5) Valve spring
(6) Retainer
(7) Retainer key
(8) Spark plug gasket
(9) Camshaft
(10) Oil seal
(11) Plug
(12) Camshaft cap
(13) Valve rocker ASSY

1) Installation of valve spring and valve:
(1) Place the cylinder head on ST.
ST 498267800 CYLINDER HEAD TABLE
(2) Coat the stem of each valve with engine oil and insert the valve into valve guide.

CAUTION:
When inserting the valve into valve guide, use special care not to damage the oil seal lip.

(3) Install the valve spring and retainer.

CAUTION:
Be sure to install the valve springs with their close-coiled end facing the seat on the cylinder head.

(4) Set the ST on valve spring.
ST 499718000 VALVE SPRING REMOVER

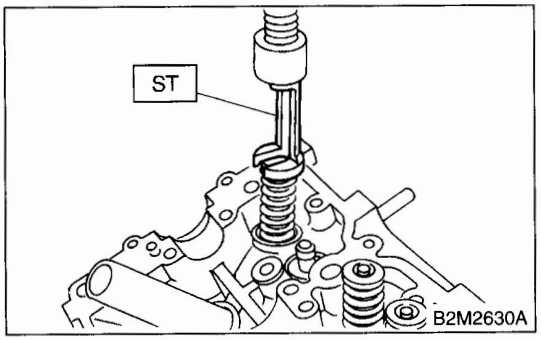

GETtheMANUALS.org

(5) Compress the valve spring and fit the valve spring retainer key.

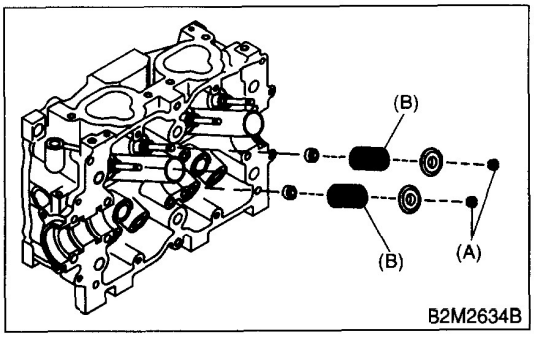

(A) Retainer key
(B) Painted face

(6) After installing, tap the valve spring retainers lightly with wooden hammer for better seating.

E: INSPECTION

1. VALVE SPRING

1) Check the valve springs for damage, free length, and tension. Replace the valve spring if it is not to the specifications presented below.
2) To measure the squareness of the valve spring, stand the spring on a surface plate and measure its deflection at the top using a try square.

Free length	54.30 mm (2.1378 in)
Squareness	2.5°, 2.4 mm (0.094 in)
Tension/spring height	214.8 — 246.2 N (21.9 — 25.1 kgf, 48.3 — 55.3 lb)/ 45.0 mm (1.772 in)
	526.6 — 581.6 N (53.7 — 59.3 kgf, 118.4 — 130.8 lb)/ 34.7 mm (1.366 in)

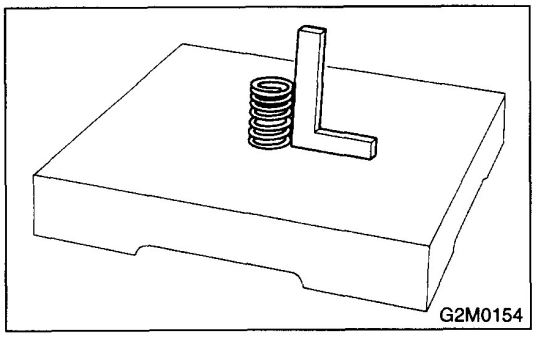

2. INTAKE AND EXHAUST VALVE OIL SEAL

Replace the oil seal with a new one, if the lip is damaged or spring out of place, or when the surfaces of intake valve and valve seat are reconditioned or intake valve guide is replaced. Use pliers to pinch and remove the oil seal from valve.
1) Place the cylinder head on ST1.
2) Press-fit the oil seal to the specified dimension indicated in the figure using ST2.

CAUTION:
• Apply engine oil to oil seal before press-fitting.
• When press-fitting the oil seal, do not use a hammer or strike in.
• Differentiate between the intake valve oil seal and exhaust valve oil seal by noting their difference in color.

ST1 498267800 CYLINDER HEAD TABLE
ST2 498857100 VALVE OIL SEAL GUIDE

Color of rubber part:
Intake [Black]
Exhaust [Brown]

Color of spring part:
Intake [Silver]
Exhaust [Silver]

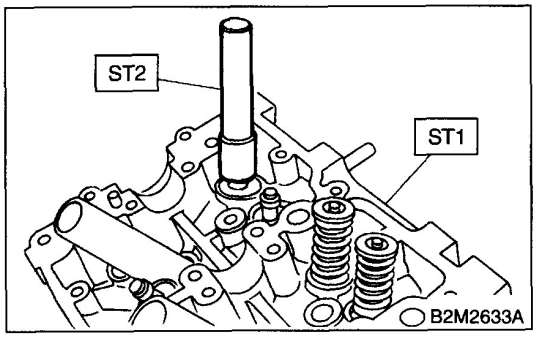

GETtheMANUALS.org

F: ADJUSTMENT

1. CYLINDER HEAD

1) Make sure that no crack or other damage do not exists. In addition to visual inspection, inspect important areas by means of red lead check.
Also make sure the gasket installing surface shows no trace of gas and water leaks.
2) Place the cylinder head on ST.
ST 498267800 CYLINDER HEAD TABLE
3) Measure the warping of the cylinder head surface that mates with crankcase using a straight edge (A) and thickness gauge (B).
If the warping exceeds 0.05 mm (0.0020 in), regrind the surface with a surface grinder.

Warping limit:
0.05 mm (0.0020 in)

Grinding limit:
0.1 mm (0.004 in)

Standard height of cylinder head:
97.5 mm (3.839 in)

CAUTION:
Uneven torque for the cylinder head bolts can cause warping. When reassembling, pay special attention to the torque so as to tighten evenly.

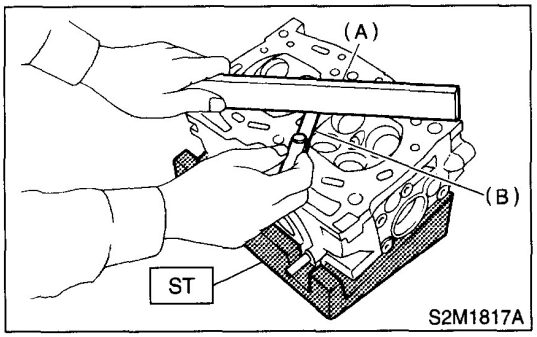

2. VALVE SEAT

Inspect the intake and exhaust valve seats, and correct the contact surfaces with a valve seat cutter if they are defective or when valve guides are replaced.

Valve seat width: W
Intake
Standard 1.0 mm (0.039 in)
Limit 1.7 mm (0.067 in)
Exhaust
Standard 1.4 mm (0.055 in)
Limit 2.1 mm (0.083 in)

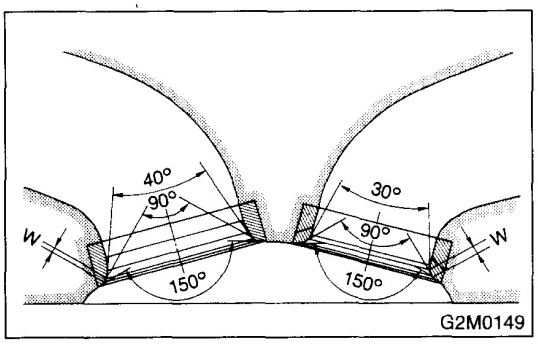

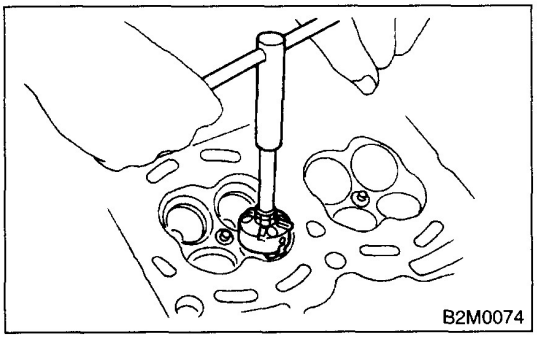

GETthisMANUALS.org

3. VALVE GUIDE

1) Check the clearance between valve guide and stem. The clearance can be checked by measuring the outside diameter of valve stem and the inside diameter of valve guide with outside and inside micrometers respectively.

Clearance between the valve guide and valve stem:
Standard
Intake 0.035 — 0.062 mm (0.0014 — 0.0024 in)
Exhaust 0.040 — 0.067 mm (0.0016 — 0.0026 in)
Limit
0.15 mm (0.0059 in)

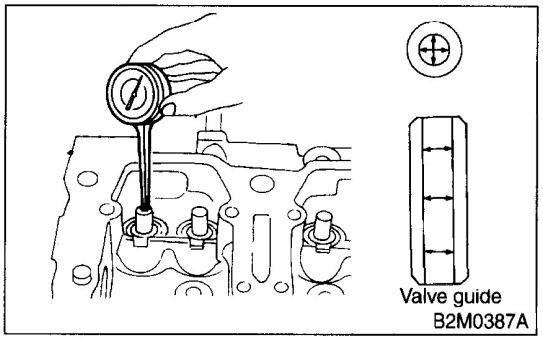

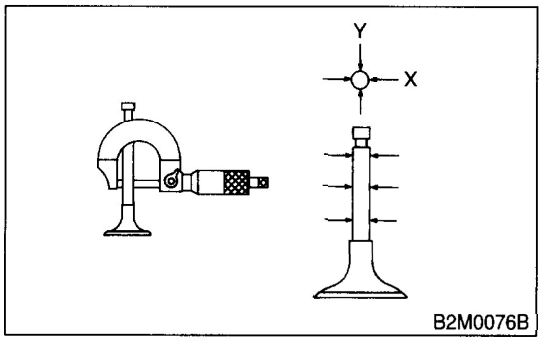

2) If the clearance between valve guide and stem exceeds the limit, replace the valve guide or valve itself whichever shows greater amount of wear. See the following procedure for valve guide replacement:

Valve guide inner diameter:
6.000 — 6.012 mm (0.2362 — 0.2367 in)

Valve stem outer diameters:
Intake
5.950 — 5.965 mm (0.2343 — 0.2348 in)
Exhaust
5.945 — 5.960 mm (0.2341 — 0.2346 in)

(1) Place the cylinder head on ST1 with the combustion chamber upward so that valve guides enter the holes in ST1.

(2) Insert ST2 into the valve guide and press it down to remove the valve guide.
ST1 498267800 CYLINDER HEAD TABLE
ST2 499767200 VALVE GUIDE REMOVER

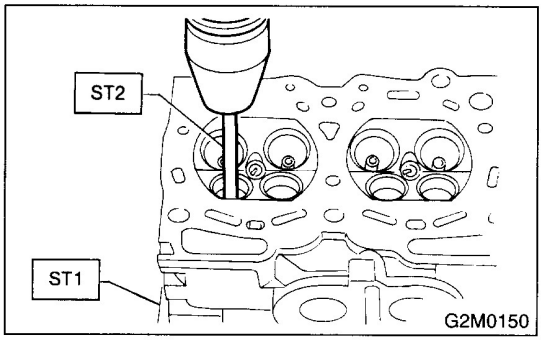

(3) Turn the cylinder head upside down and place the ST as shown in the figure.
Intake side:
ST 499767700 VALVE GUIDE ADJUSTER
Exhaust side:
ST 499767800 VALVE GUIDE ADJUSTER

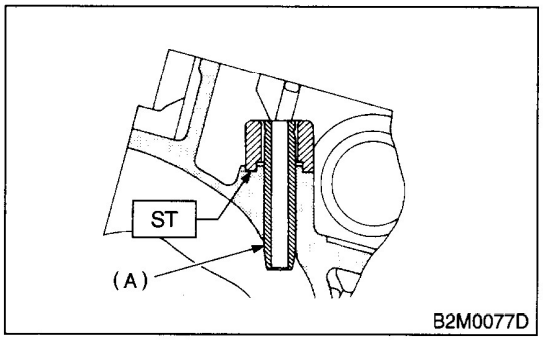

(A) Valve guide

(4) Before installing a new oversize valve guide, make sure that neither scratches nor damages exist on the inside surface of the valve guide holes in cylinder head.

GETMANUALS.org

(5) Put a new valve guide, coated with sufficient oil, in cylinder, and insert the ST1 into valve guide. Press in until the valve guide upper end is flush with the upper surface of ST2.

ST1 499767200 VALVE GUIDE REMOVER
Intake side:
ST2 499767700 VALVE GUIDE ADJUSTER
Exhaust side:
ST2 499767800 VALVE GUIDE ADJUSTER

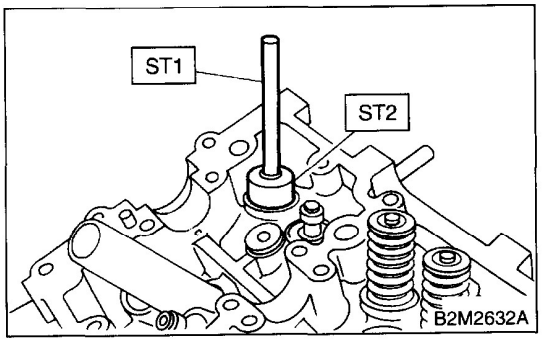

(6) Check the valve guide protrusion.

Valve guide protrusion: L
Intake
20.0 — 20.5 mm (0.787 — 0.807 in)
Exhaust
16.5 — 17.0 mm (0.650 — 0.669 in)

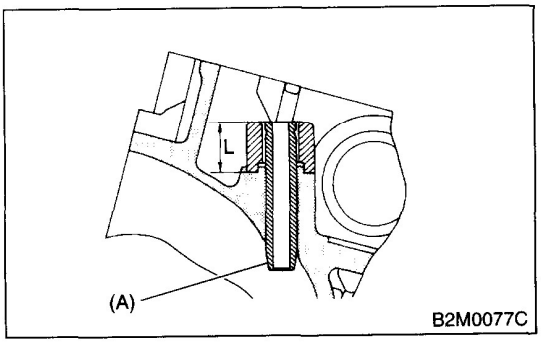

(A) Valve guide

(7) Ream the inside of valve guide with ST. Gently rotate the reamer clockwise while pressing it lightly into the valve guide, and return it also rotating clockwise. After reaming, clean the valve guide to remove chips.

CAUTION:
- **Apply engine oil to the reamer when reaming.**
- **If the inner surface of the valve guide is torn, the edge of the reamer should be slightly ground with an oil stone.**
- **If the inner surface of the valve guide becomes lustrous and the reamer does not chip, use a new reamer or remedy the reamer.**

ST 499767400 VALVE GUIDE REAMER

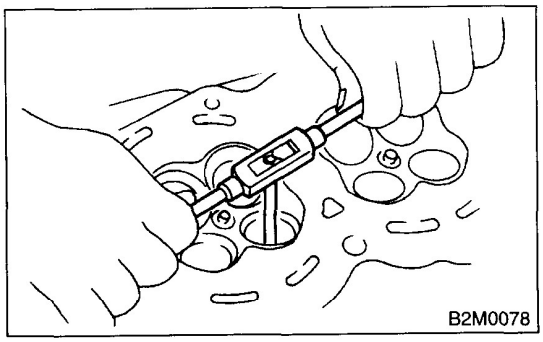

(8) Recheck the contact condition between valve and valve seat after replacing the valve guide.

GETtheMANUALS.org

4. INTAKE AND EXHAUST VALVE

1) Inspect the flange and stem of the valve, and replace if damaged, worn, or deformed, or if "H" is less than the specified limit.

H:
Intake
Standard 1.0 mm (0.039 in)
Limit 0.6 mm (0.024 in)
Exhaust
Standard 1.2 mm (0.047 in)
Limit 0.6 mm (0.024 in)

Valve overall length:
Intake
120.6 mm (4.75 in)
Exhaust
121.7 mm (4.79 in)

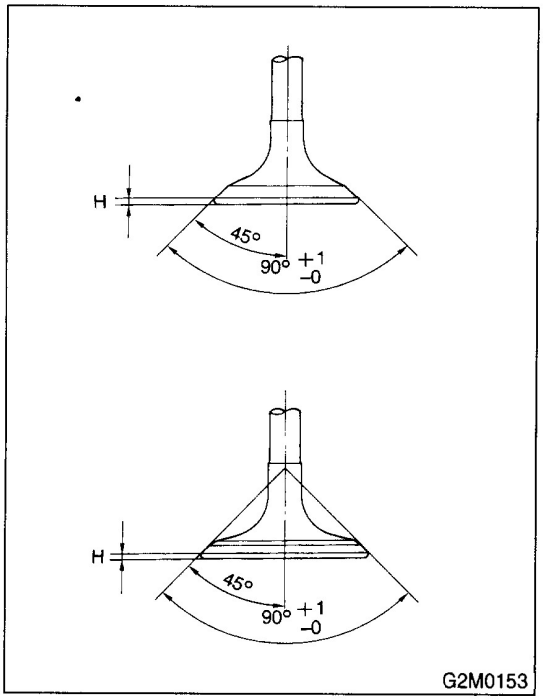

2) Put a small amount of grinding compound on the seat surface and lap the valve and seat surface. <Ref. to ME(SOHC)-65, VALVE SEAT, ADJUSTMENT, Cylinder Head Assembly.> Install a new intake valve oil seal after lapping.

GETMANUALS.org

21.Cylinder Block

A: REMOVAL

NOTE:
Before conducting this procedure, drain the engine oil completely if applicable.

1) Remove the intake manifold. <Ref. to FU(SOHC)-15, REMOVAL, Intake Manifold.>
2) Remove the V-belt. <Ref. to ME(SOHC)-43, REMOVAL, V-belt.>
3) Remove the crankshaft pulley. <Ref. to ME(SOHC)-45, REMOVAL, Crankshaft Pulley.>
4) Remove the belt cover. <Ref. to ME(SOHC)-46, REMOVAL, Belt Cover.>
5) Remove the timing belt assembly. <Ref. to ME(SOHC)-47, REMOVAL, Timing Belt Assembly.>
6) Remove the camshaft sprocket. <Ref. to ME(SOHC)-52, REMOVAL, Camshaft Sprocket.>
7) Remove the crankshaft sprocket. <Ref. to ME(SOHC)-54, REMOVAL, Crankshaft Sprocket.>
8) Remove the generator and A/C compressor with their brackets.
9) Remove the rocker cover.
10) Remove the cylinder head bolts in alphabetical sequence shown in the figure.

CAUTION:
Leave bolts (a) and (b) engaged by three or four threads to prevent the cylinder head from falling.

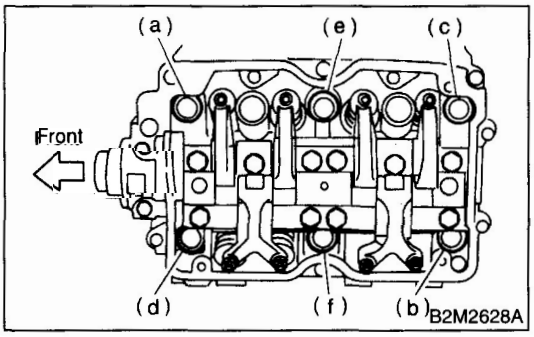

11) While tapping the cylinder head with a plastic hammer, separate it from cylinder block.
12) Remove the bolts (a) and (b) to remove the cylinder head.

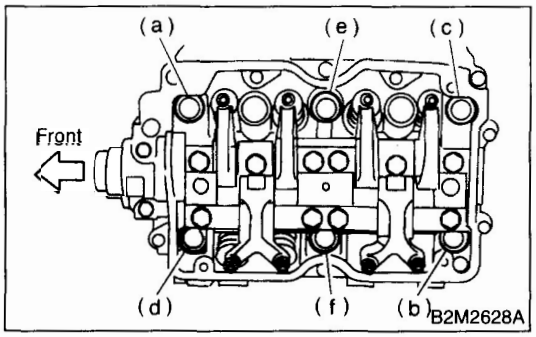

13) Remove the cylinder head gasket.

CAUTION:
Do not scratch the mating surface of cylinder head and cylinder block.

14) Similarly, remove the right side cylinder head.
15) Remove the clutch housing cover (MT vehicles only).
16) Remove the flywheel (MT vehicles only) or drive plate (AT vehicles only).
Using the ST, lock crankshaft.
ST 498497100 CRANKSHAFT STOPPER

- **MT MODEL**

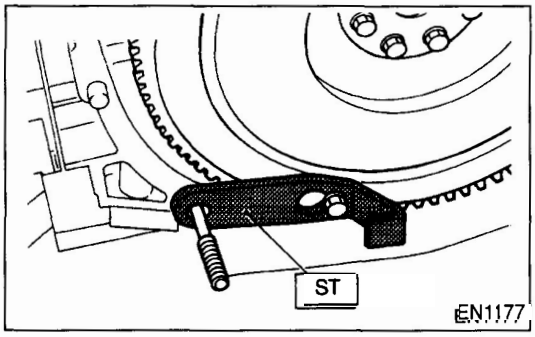

- **AT MODEL**

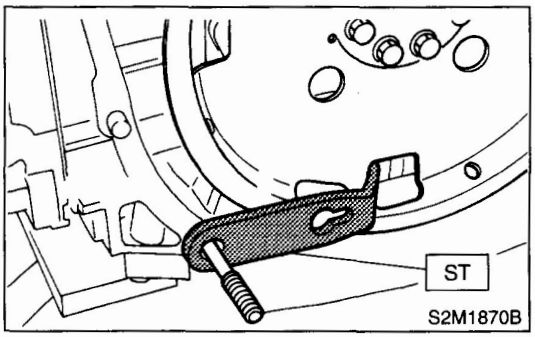

17) Remove the oil separator cover.
18) Remove the water by-pass pipe for heater.
19) Remove the water pump.

GETtheMANUALS.org

20) Remove the oil pump from cylinder block.
Use a flat-bladed screwdriver as shown in the figure when removing the oil pump.

CAUTION:
Be careful not to scratch the mating surface of cylinder block and oil pump.

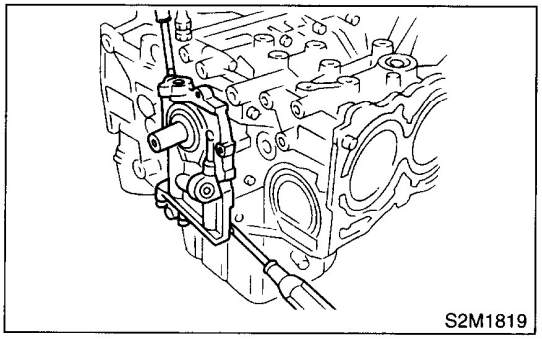
S2M1819

21) Removal of oil pan:
(1) Turn the cylinder block with #2 and #4 piston sides facing upward.
(2) Remove the bolts which secure oil pan to cylinder block.
(3) Insert a oil pan cutter blade between cylinder block-to-oil pan clearance and remove the oil pan.

CAUTION:
Do not use a screwdriver or similar tool in place of oil pan cutter.

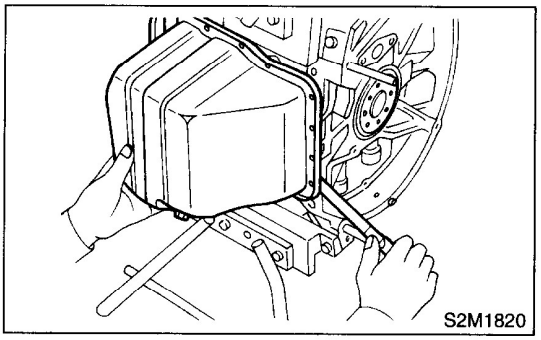
S2M1820

22) Remove the oil strainer stay.
23) Remove the oil strainer.
24) Remove the baffle plate.
25) Remove the oil filter using ST.
ST 498547000 OIL FILTER WRENCH

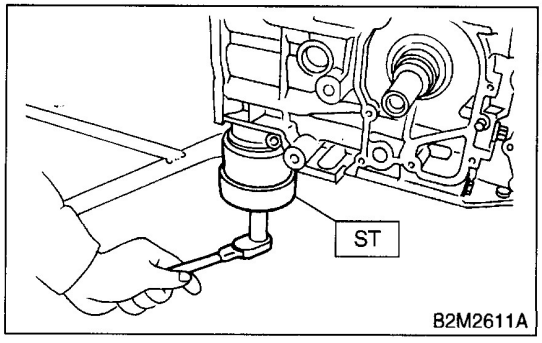

B2M2611A

26) Remove the water pipe.

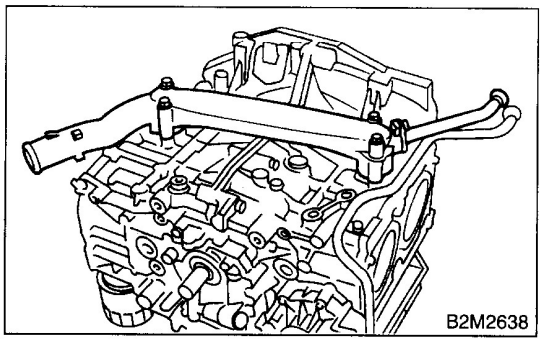
B2M2638

GETthisMANUALS.org

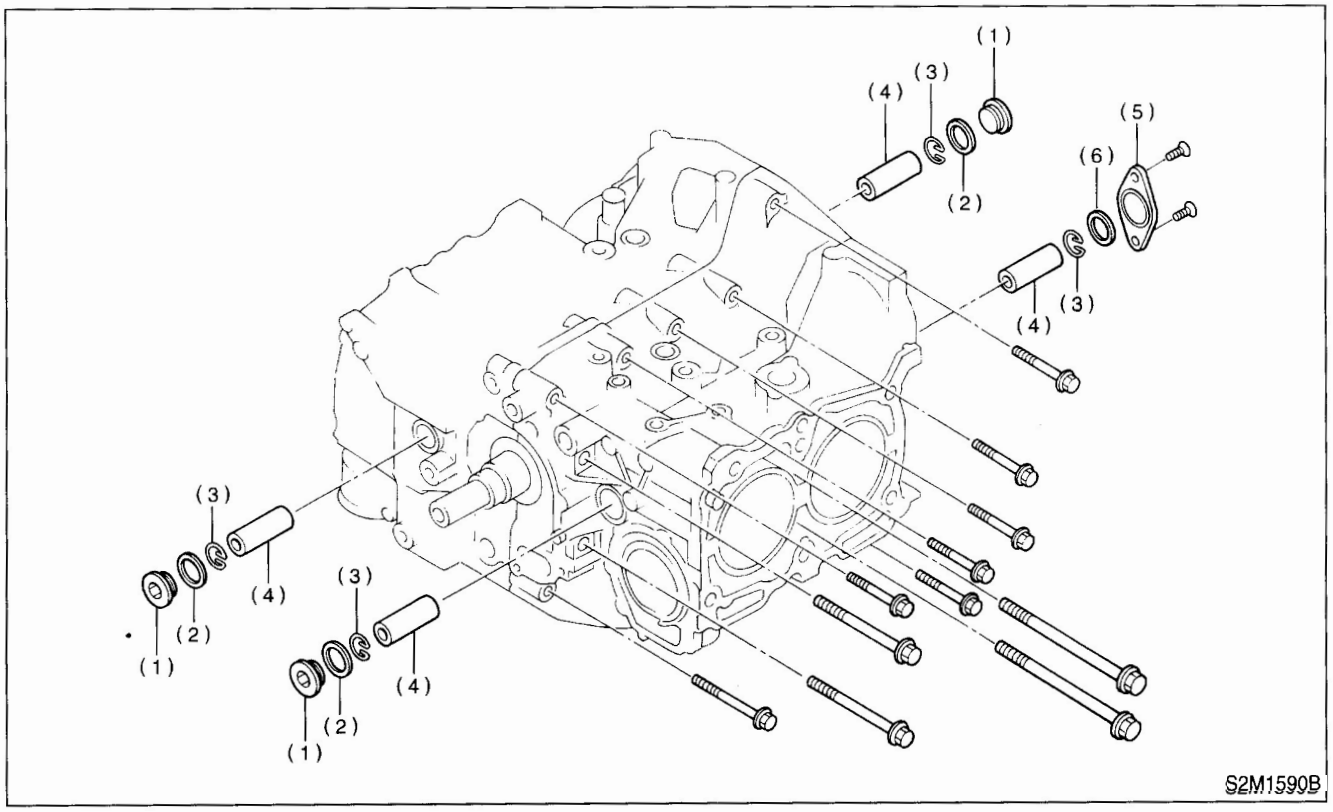

(1) Service hole plug
(2) Gasket
(3) Circlip
(4) Piston pin
(5) Service hole cover
(6) O-ring

27) Remove the service hole cover and service hole plugs using a hexagon wrench [14 mm (0.55 in)].

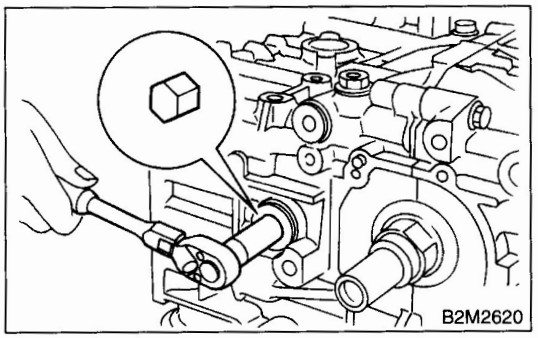

28) Rotate the crankshaft to bring #1 and #2 pistons to bottom dead center position, then remove the piston circlip through service hole of #1 and #2 cylinders.

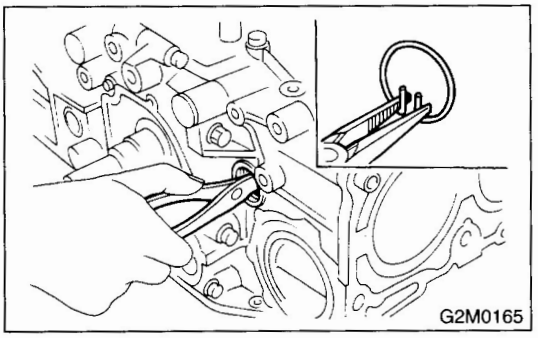

GETtheMANUALS.org

29) Draw out the piston pin from #1 and #2 pistons using ST.
ST 499097700 PISTON PIN REMOVER

CAUTION:
Be careful not to confuse the original combination of piston, piston pin and cylinder.

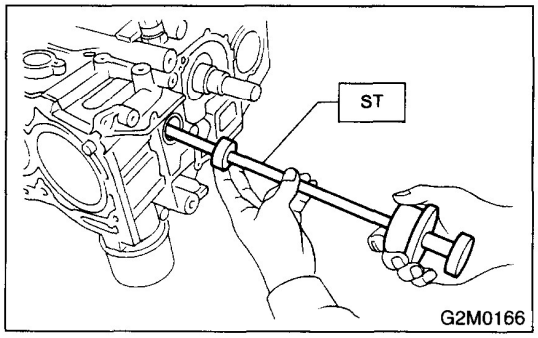

30) Similarly remove the piston pins from #3 and #4 pistons.
31) Remove the bolts which connect cylinder block on the side of #2 and #4 cylinders.
32) Back off the bolts which connect cylinder block on the side of #1 and #3 cylinders two or three turns.
33) Set up the cylinder block so that #1 and #3 cylinders are on the upper side, then remove the cylinder block connecting bolts.
34) Separate the left-hand and right-hand cylinder blocks.

CAUTION:
When separating the cylinder block, do not allow the connecting rod to fall and damage the cylinder block.

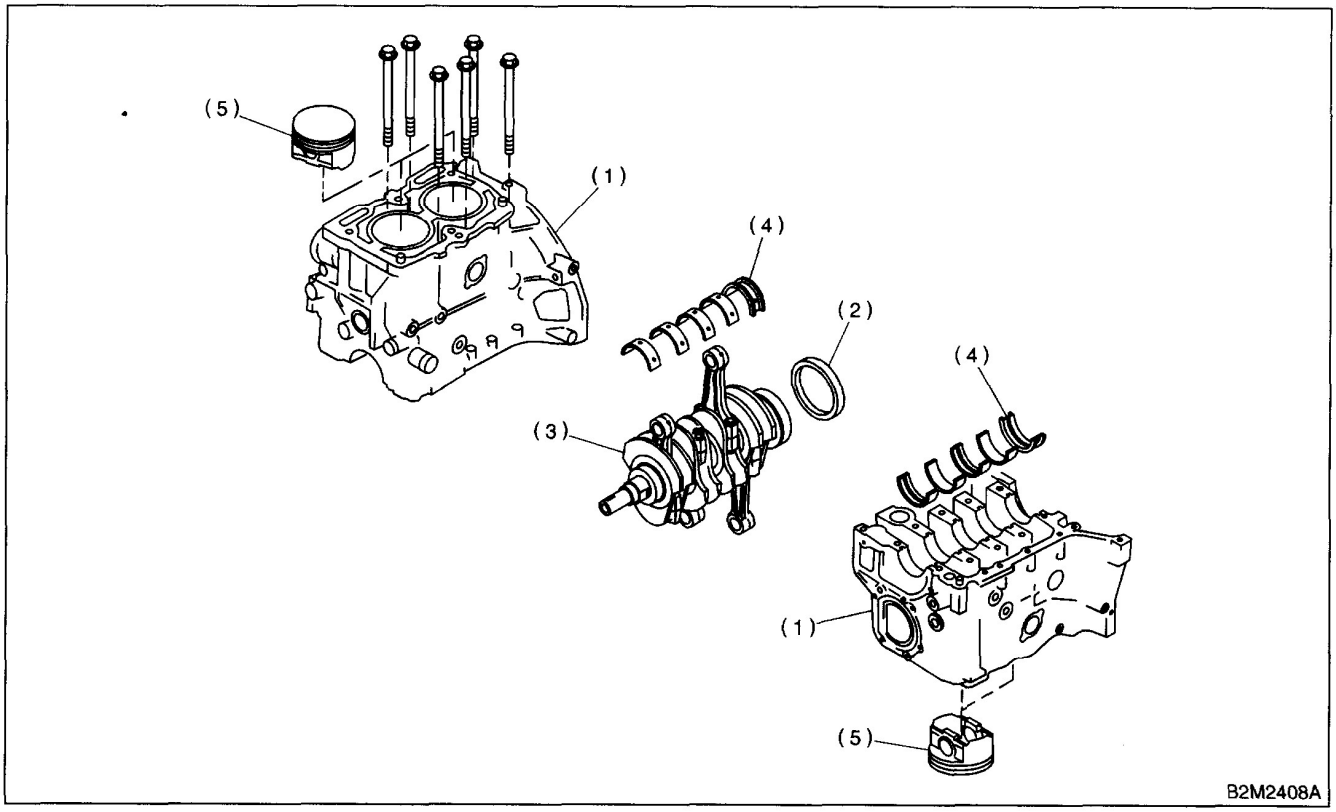

(1) Cylinder block
(2) Rear oil seal
(3) Crankshaft
(4) Crankshaft bearing
(5) Piston

35) Remove the rear oil seal.
36) Remove the crankshaft together with connecting rod.
37) Remove the crankshaft bearings from cylinder block using a hammer handle.

CAUTION:
Do not confuse the combination of crankshaft bearings. Press the bearing at the end opposite to locking lip.

38) Draw out each piston from cylinder block using a wooden bar or hammer handle.

CAUTION:
Do not confuse the combination of piston and cylinder.

GETtheMANUALS.org

B: INSTALLATION

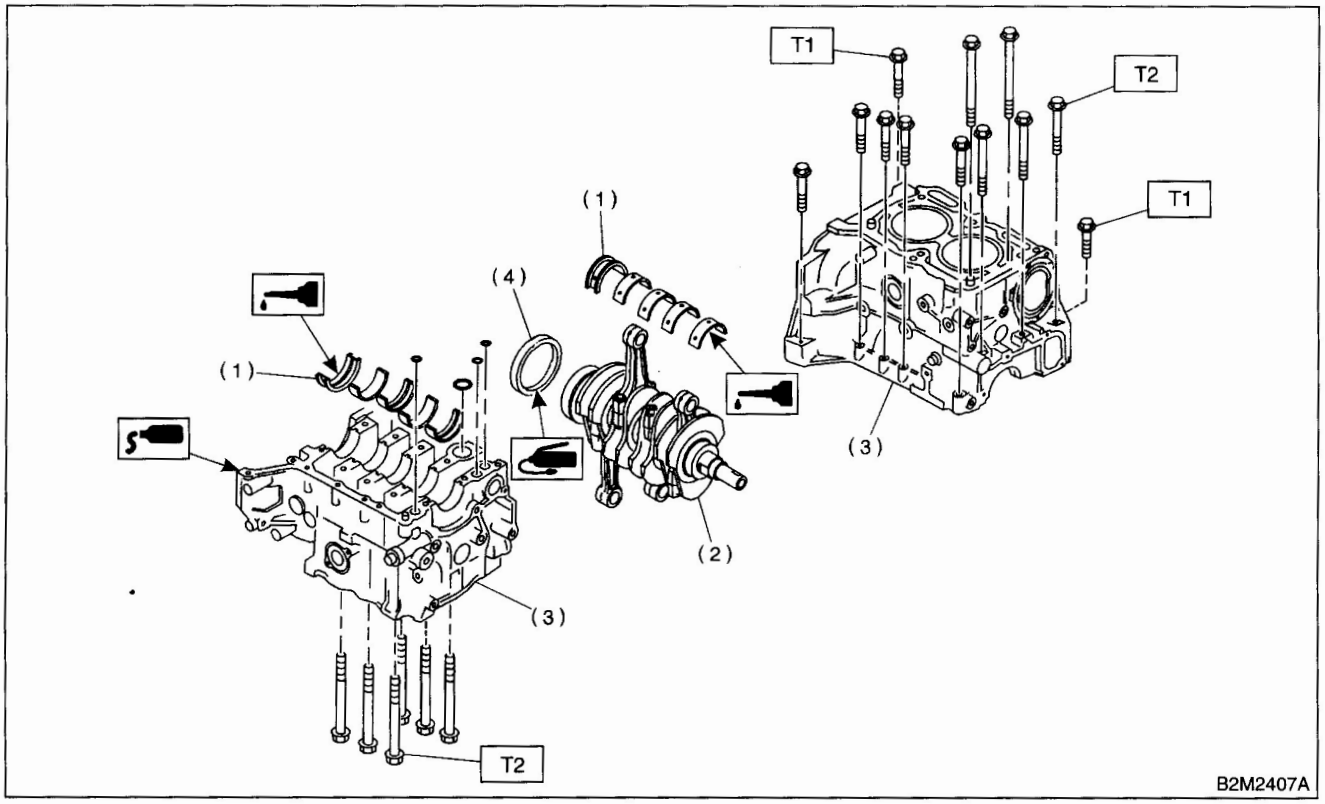

(1) Crankshaft bearing
(2) Crankshaft
(3) Cylinder block
(4) Rear oil seal

Tightening torque: N·m (kgf-m, ft-lb)
T1: 25 (2.5, 18.1)
T2: 47 (4.8, 34.7)

CAUTION:
Remove oil in the mating surface of bearing and cylinder block before installation. Also apply a coat of engine oil to crankshaft pins.

1) Position the crankshaft on the #2 and #4 cylinder block.

2) Apply fluid packing to the mating surface of #1 and #3 cylinder block, and position it on #2 and #4 cylinder block.

Fluid packing:
THREE BOND 1215 or equivalent

CAUTION:
Do not allow fluid packing to jut into O-ring grooves, oil passages, bearing grooves, etc.

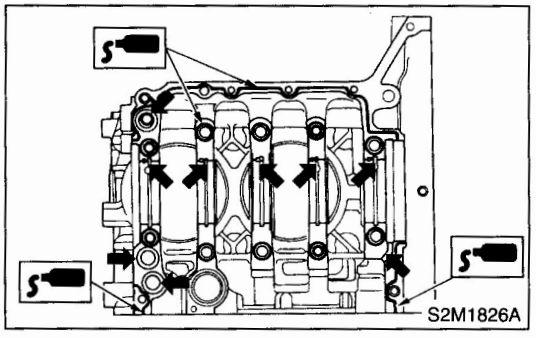

GETtheMANUALS.org

3) Temporarily tighten the 10 mm cylinder block connecting bolts in alphabetical sequence shown in the figure.

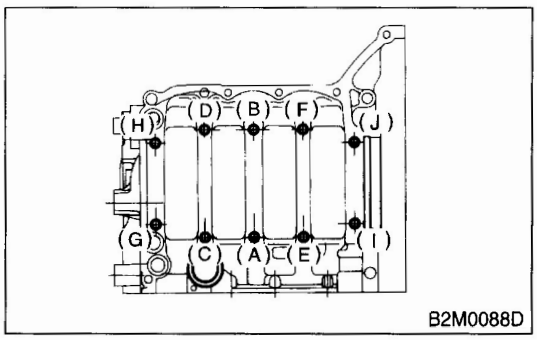

4) Tighten the 10 mm cylinder block connecting bolts in alphabetical sequence.

Tightening torque:
47 N·m (4.8 kgf-m, 34.7 ft-lb)

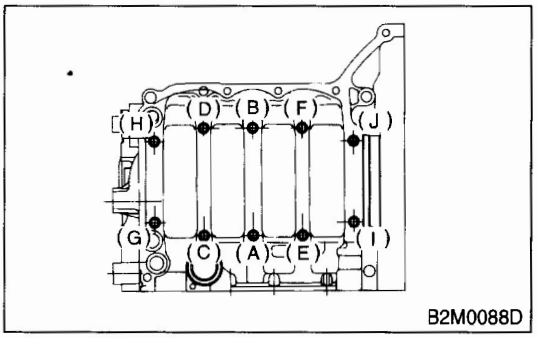

5) Tighten the 8 mm and 6 mm cylinder block connecting bolts in alphabetical sequence shown in the figure.

Tightening torque:
(A) — (G): 25 N·m (2.5 kgf-m, 18.1 ft-lb)
(H): 6.4 N·m (0.65 kgf-m, 4.7 ft-lb)

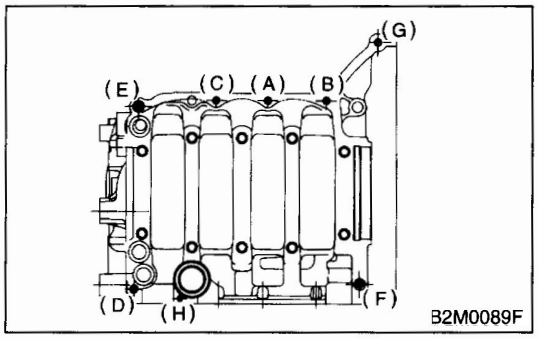

6) Install the rear oil seal using ST1 and ST2.
ST1 499597100 OIL SEAL GUIDE
ST2 499587200 OIL SEAL INSTALLER

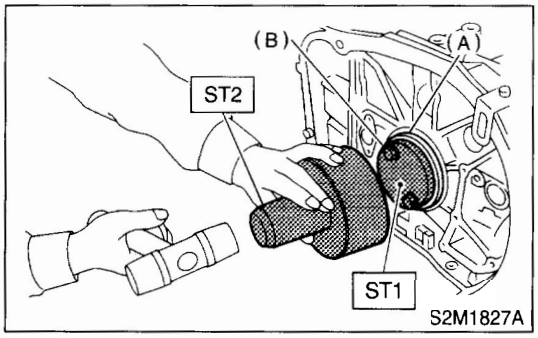

(A) Rear oil seal
(B) Flywheel attaching bolt

7) Position the top ring gap at (A) or (B) in the figure.

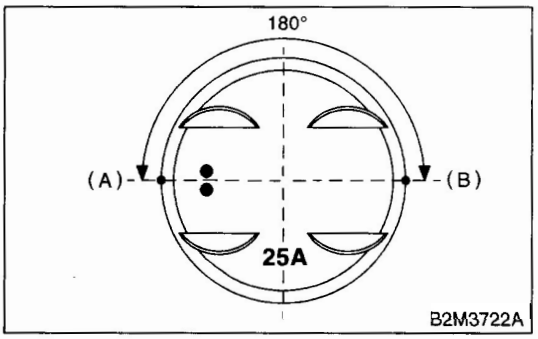

8) Position the second ring gap at 180° on the reverse side for the top ring gap.
9) Position the upper rail gap at (C) or (D) in the figure.

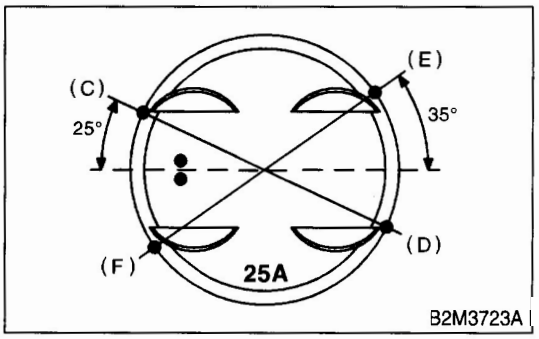

10) Position the expander gap at 180° of the reverse side for the upper rail gap.

GETtheMANUALS.org

11) Position the lower rail gap at (E) or (F) in the figure.

CAUTION:
- **Ensure ring gaps do not face the same direction.**
- **Ensure ring gaps are not within the piston skirt area.**

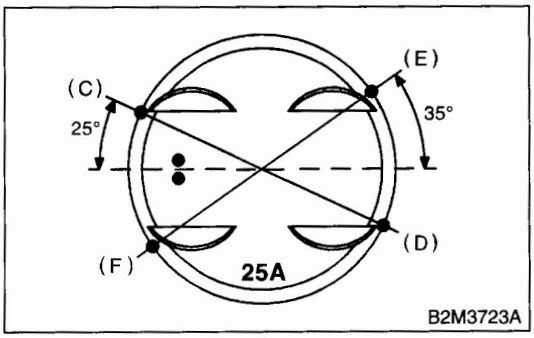

12) Installing the circlip:
Install the circlips in piston holes located opposite of service holes in cylinder block, when positioning all pistons in the corresponding cylinders.

CAUTION:
Use new circlips.

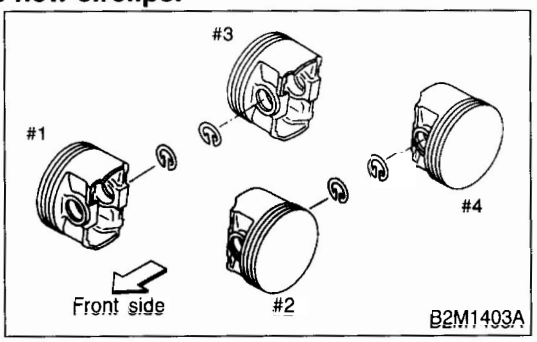

CAUTION:
Piston front mark faces towards the front of the engine.

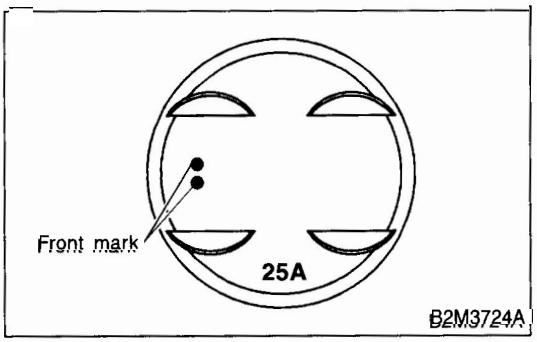

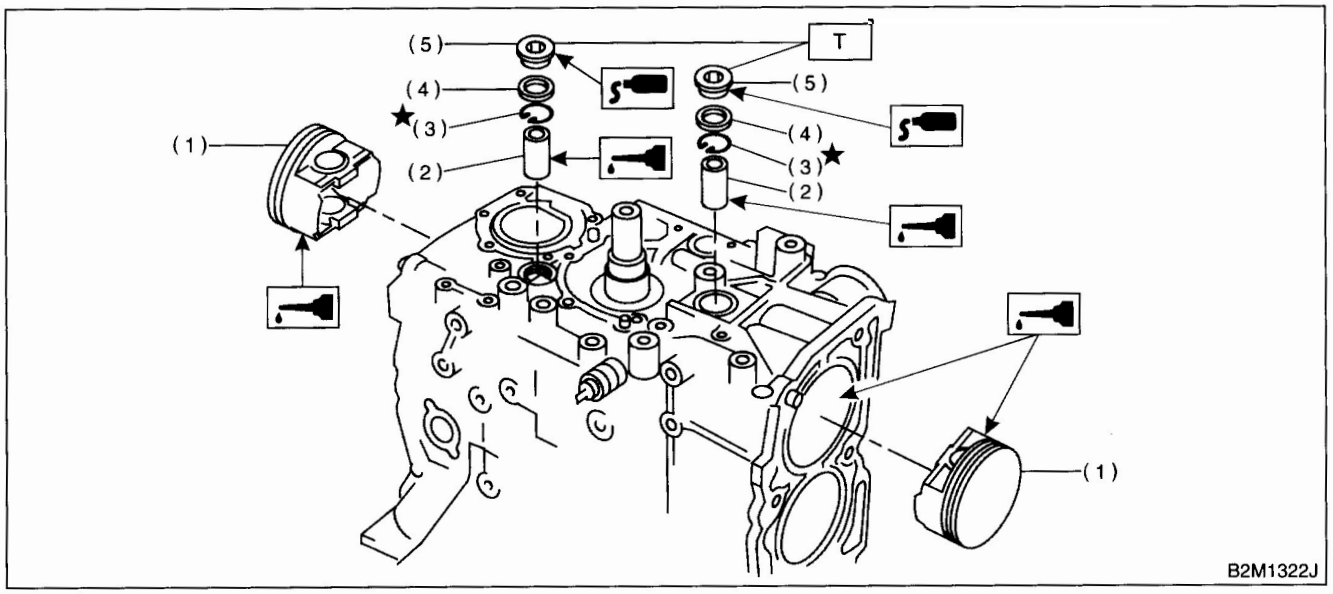

(1) Piston
(2) Piston pin
(3) Circlip
(4) Gasket
(5) Service hole plug

Tightening torque: N·m (kgf-m, ft-lb)
T: 69 (7.0, 50.6)

GETtheMANUALS.org

13) Installing the piston:
(1) Turn the cylinder block so that #1 and #2 cylinders face upward.
(2) Using ST1, turn the crankshaft so that #1 and #2 connecting rods are set at bottom dead center.

ST1 499987500 CRANKSHAFT SOCKET

(3) Apply a coat of engine oil to the pistons and cylinders and insert pistons in their cylinders using ST2.

ST2 498747300 PISTON GUIDE

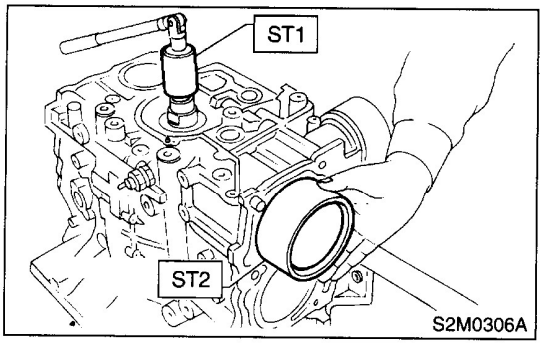

14) Installing piston pin:
(1) Insert ST3 into the service hole to align piston pin hole with connecting rod small end.

CAUTION:
Apply a coat of engine oil to ST3 before insertion.

ST3 499017100 PISTON PIN GUIDE

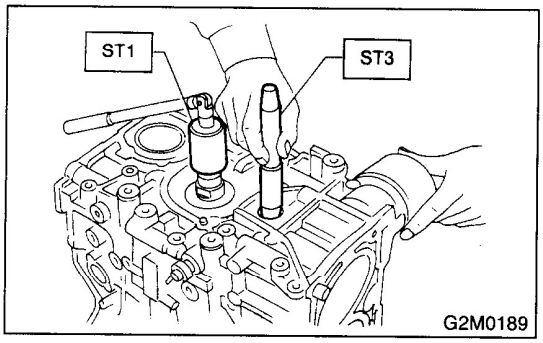

(2) Apply a coat of engine oil to the piston pin and insert piston pin into piston and connecting rod through service hole.
(3) Install the circlip.

CAUTION:
Use new circlips.

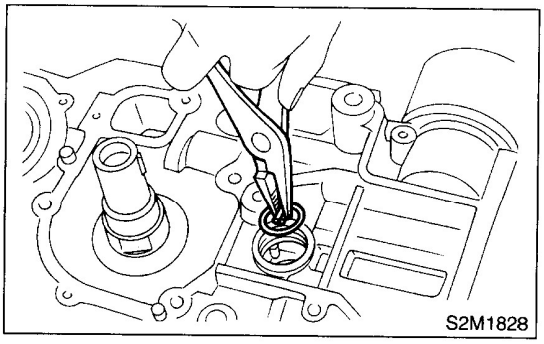

(4) Apply fluid packing around the service hole plug.

Fluid packing:
THREE BOND 1215 or equivalent

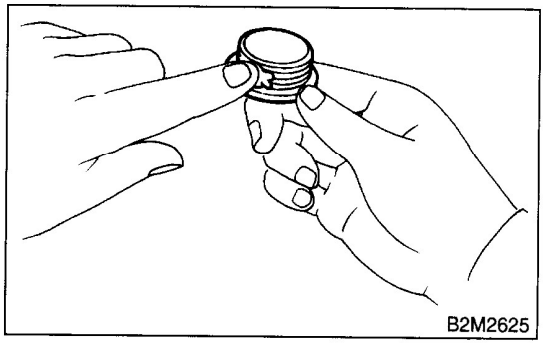

(5) Install the service hole plug and gasket.

CAUTION:
Use a new gasket.

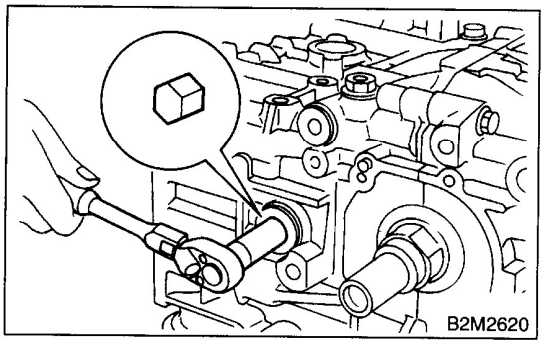

GETtheMANUALS.org

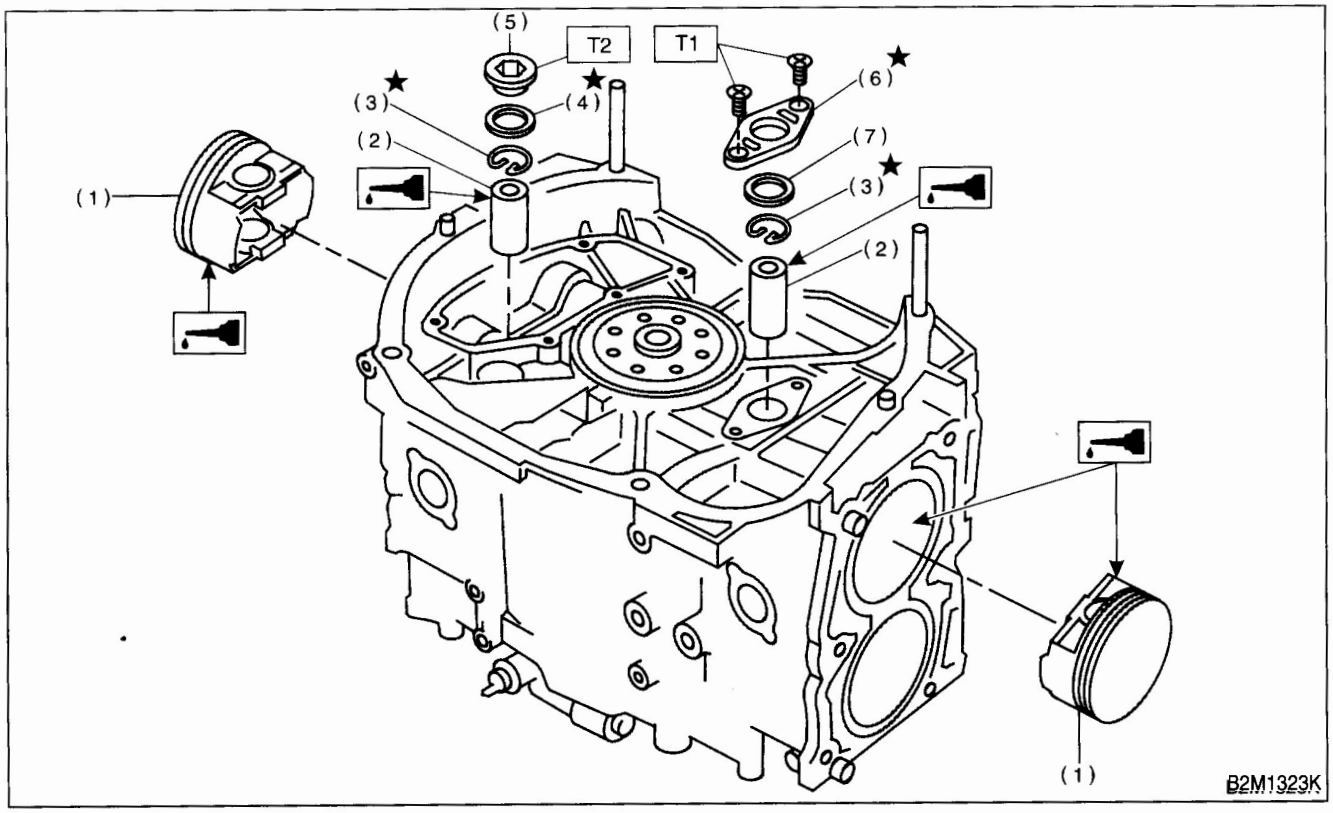

(1) Piston
(2) Piston pin
(3) Circlip
(4) Gasket
(5) Service hole plug
(6) Service hole cover
(7) O-ring

Tightening torque: N·m (kgf-m, ft-lb)
T1: 6.4 (0.65, 4.7)
T2: 69 (7.0, 50.6)

(6) Turn the cylinder block so that #3 and #4 cylinders face upward. Using the same procedures as used for #1 and #2 cylinders, install the pistons and piston pins.

15) Install the water pipe.

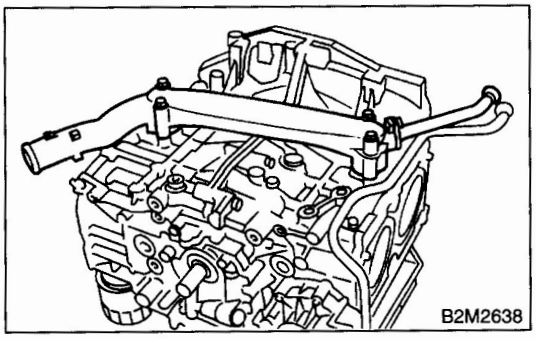

16) Install the baffle plate.

Tightening torque:
6.4 N·m (0.65 kgf-m, 4.7 ft-lb)

17) Install the oil strainer and O-ring

Tightening torque:
10 N·m (1.0 kgf-m, 7 ft-lb)

18) Install the oil strainer stay.

19) Apply fluid packing to matching surfaces and install the oil pan.

Fluid packing:
THREE BOND 1215 or equivalent

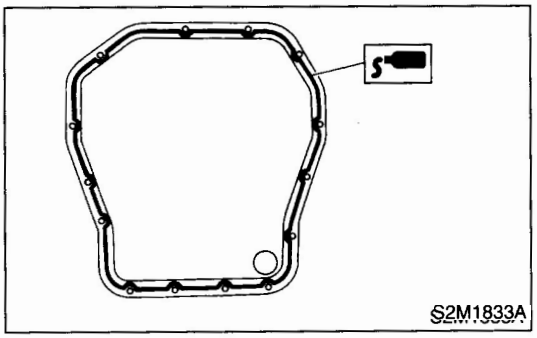

GETtheMANUALS.org

20) Apply fluid packing to matching surfaces and install the oil separator cover.

Fluid packing:
THREE BOND 1215 or equivalent

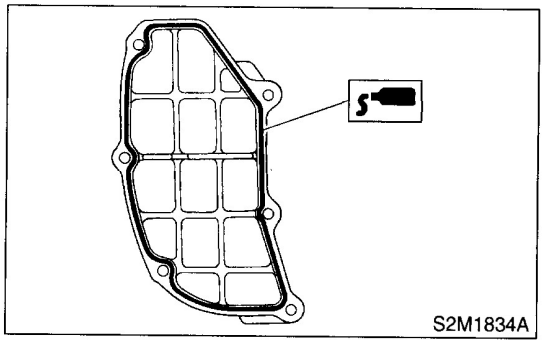

21) Install the flywheel or drive plate.
To lock the crankshaft, use ST.
ST 498497100 CRANKSHAFT STOPPER

Tightening torque:
72 N·m (7.3 kgf-m, 52.8 ft-lb)

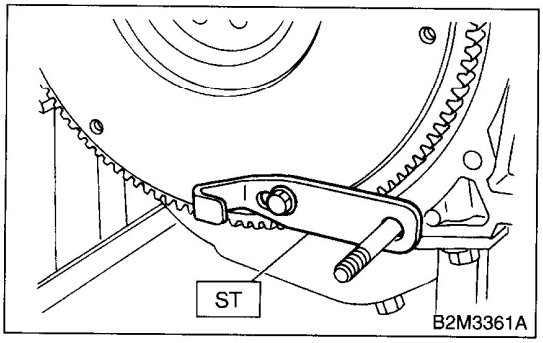

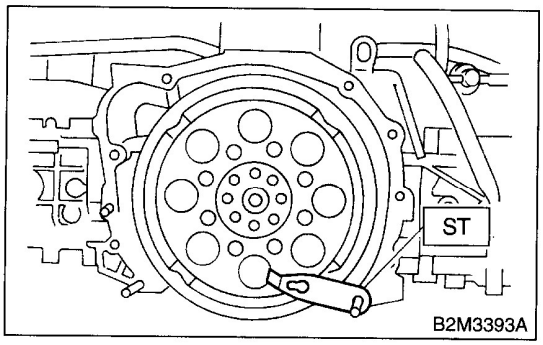

22) Install the housing cover.

23) Installation of oil pump:
(1) Discard the front oil seal after removal. Replace with a new one using ST.
ST 499587100 OIL SEAL INSTALLER

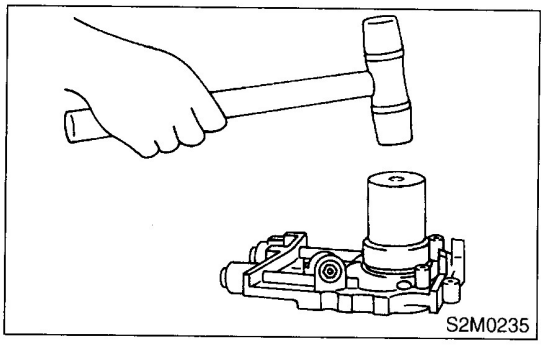

(2) Apply fluid packing to the matching surface of oil pump.

Fluid packing:
THREE BOND 1215 or equivalent

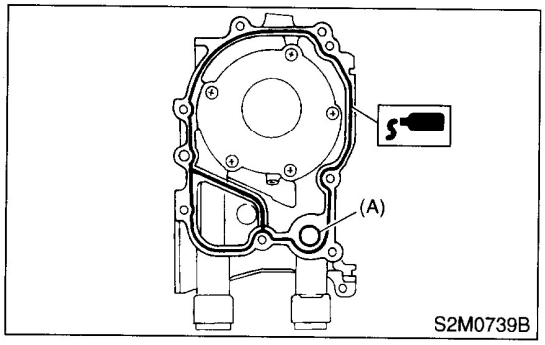

(A) O-ring

(3) Apply a coat of engine oil to the inside of the oil seal.

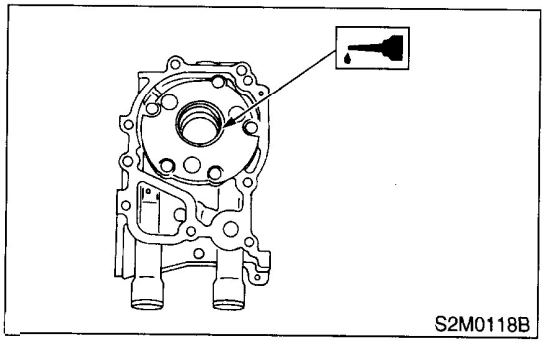

GETtheMANUALS.org

(4) Install the oil pump on cylinder block. Be careful not to damage the oil seal during installation.

Tightening torque:
6.4 N·m (0.65 kgf-m, 4.7 ft-lb)

CAUTION:
• Do not forget to install the O-ring and seal when installing the oil pump.
• Align the flat surface of oil pump's inner rotor with crankshaft before installation.

24) Install the water pump and gasket.

Tightening torque:
First; 12 N·m (1.2 kgf-m, 8.7 ft-lb)
Second; 12 N·m (1.2 kgf-m, 8.7 ft-lb)

CAUTION:
• Be sure to use a new gasket.
• When installing the water pump, tighten bolts in two stages in alphabetical sequence as shown in the figure.

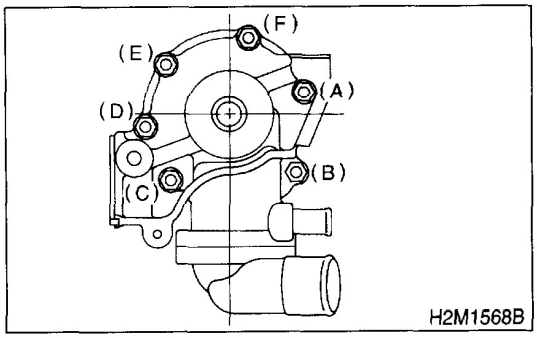

25) Install the water by-pass pipe for heater.
26) Install the oil filter using ST.
ST 498547000 OIL FILTER WRENCH

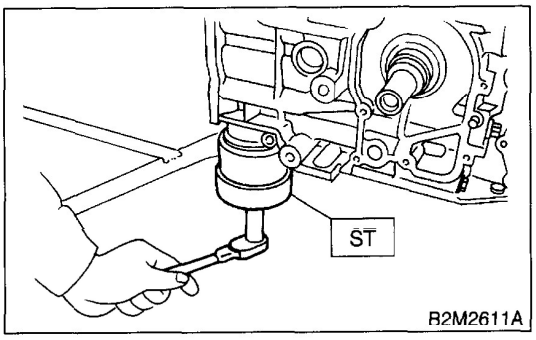

27) Tighten the cylinder head bolts.
(1) Apply a coat of engine oil to washers and bolt threads.
(2) Tighten all bolts to 29 N·m (3.0 kgf-m, 22 ft-lb) in alphabetical sequence.
Then tighten all bolts to 69 N·m (7.0 kgf-m, 51 ft-lb) in alphabetical sequence.
(3) Back off all bolts by 180° first; back them off by 180° again.
(4) Tighten the bolts (a) and (b) to 34 N·m (3.5 kgf-m, 25 ft-lb).
(5) Tighten the bolts (c), (d), (e) and (f) to 15 N·m (1.5 kgf-m, 11 ft-lb).
(6) Tighten all bolts by 80 to 90° in alphabetical sequence.

CAUTION:
Do not tighten the bolts more than 90°.

(7) Further tighten all bolts by 80 to 90° in alphabetical sequence.

CAUTION:
Ensure the total "re-tightening angle" [in the former two steps], do not exceed 180°.

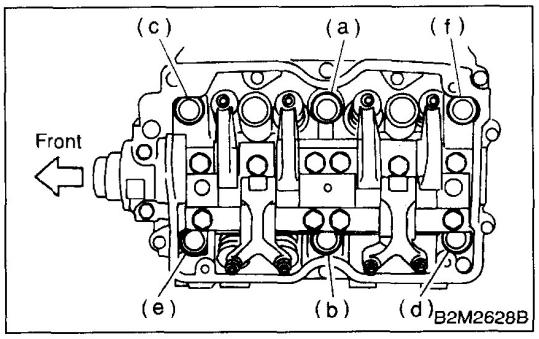

28) Install the oil level gauge guide and tighten the attaching bolt (left side only).
29) Install the rocker cover.
30) Install the crankshaft sprocket. <Ref. to ME(SOHC)-54, INSTALLATION, Crankshaft Sprocket.>
31) Install the camshaft sprocket. <Ref. to ME(SOHC)-52, INSTALLATION, Camshaft Sprocket.>
32) Install the timing belt assembly. <Ref. to ME(SOHC)-48, INSTALLATION, Timing Belt Assembly.>
33) Install the belt cover. <Ref. to ME(SOHC)-46, INSTALLATION, Belt Cover.>
34) Install the crankshaft pulley. <Ref. to ME(SOHC)-45, INSTALLATION, Crankshaft Pulley.>
35) Install the generator and A/C compressor brackets on cylinder head.
36) Install the intake manifold. <Ref. to FU(SOHC)-17, INSTALLATION, Intake Manifold.>
37) Install the V-belt. <Ref. to ME(SOHC)-43, INSTALLATION, V-belt.>

GETtheMANUALS.org

C: DISASSEMBLY

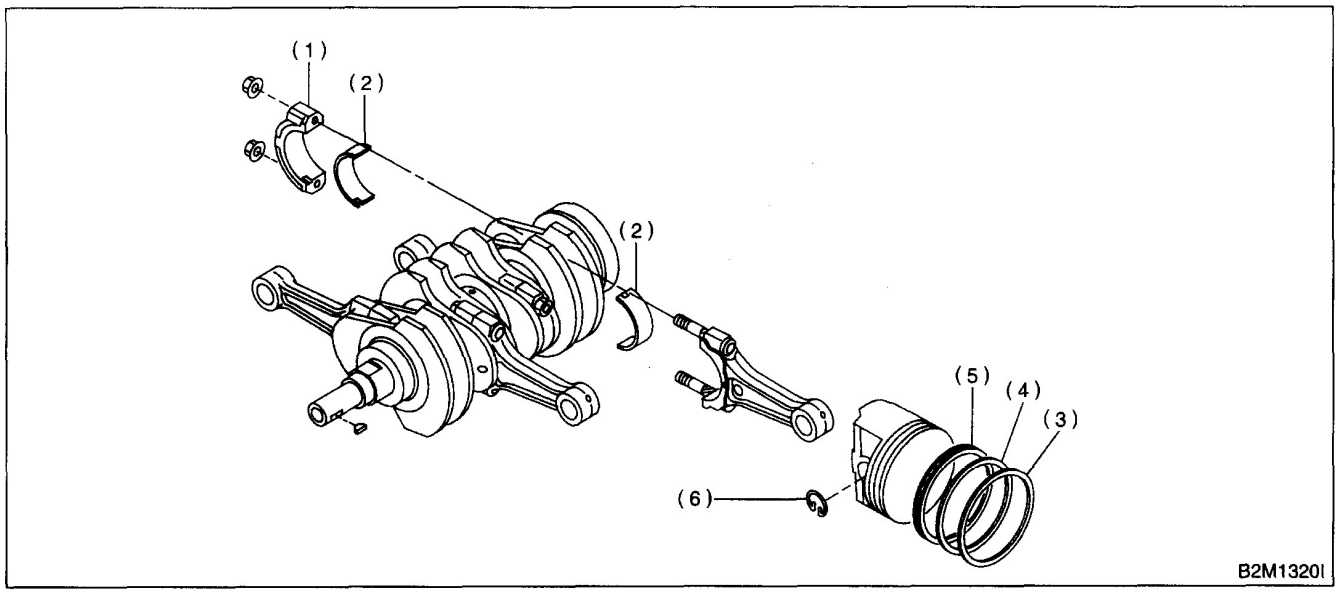

(1) Connecting rod cap
(2) Connecting rod bearing
(3) Top ring
(4) Second ring
(5) Oil ring
(6) Circlip

1) Remove the connecting rod cap.
2) Remove the connecting rod bearing.

CAUTION:
Arrange the removed connecting rod, connecting rod cap and bearing in order to prevent confusion.

3) Remove the piston rings using the piston ring expander.
4) Remove the oil ring by hand.

CAUTION:
Arrange the removed piston rings in proper order to prevent confusion.

5) Remove the circlip.

GETtheMANUALS.org

D: ASSEMBLY

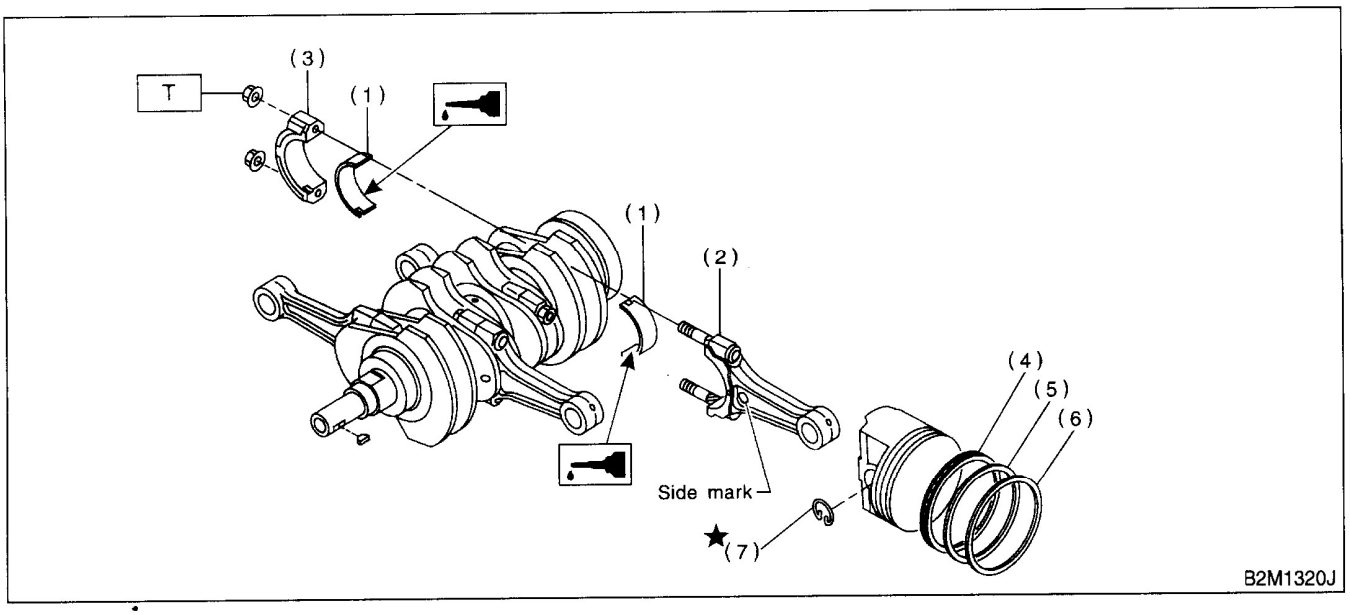

(1) Connecting rod bearing
(2) Connecting rod
(3) Connecting rod cap
(4) Oil ring
(5) Second ring
(6) Top ring
(7) Circlip

Tightening torque: N·m (kgf-m, ft-lb)
T: 44.6 (4.55, 32.9)

1) Install the connecting rod bearings on connecting rods and connecting rod caps.

CAUTION:
Apply oil to the surfaces of the connecting rod bearings.

2) Install the connecting rod on crankshaft.

CAUTION:
Position each connecting rod with the side marked facing forward.

3) Install the connecting rod cap with connecting rod nut.
Ensure the arrow on connecting rod cap faces the front during installation.

CAUTION:
- **Each connecting rod has its own mating cap. Make sure that they are assembled correctly by checking their matching number.**
- **When tightening the connecting rod nuts, apply oil on the threads.**

4) Install the oil ring spacer, upper rail and lower rail in this order by hand. Then install the second ring and top ring with a piston ring expander.

E: INSPECTION

1. CYLINDER BLOCK

1) Visually check for cracks and damage. Especially, inspect the important parts by means of red lead check.
2) Check the oil passages for clogging.
3) Inspect the crankcase surface that mates with cylinder head for warping by using a straight edge, and correct by grinding if necessary.

Warping limit:
0.05 mm (0.0020 in)

Grinding limit:
0.1 mm (0.004 in)

Standard height of cylinder block:
201.0 mm (7.91 in)

GETtheMANUALS.org

2. CYLINDER AND PISTON

1) The cylinder bore size is stamped on the cylinder block's front upper surface.

CAUTION:
Measurement should be performed at a temperature of 20°C (68°F).

NOTE:
Standard sized pistons are classified into two grades, "A" and "B". These grades should be used as a guide line in selecting a standard piston.

Standard diameter:
A: 99.505 — 99.515 mm (3.9175 — 3.9179 in)
B: 99.495 — 99.515 mm (3.9171 — 3.9175 in)

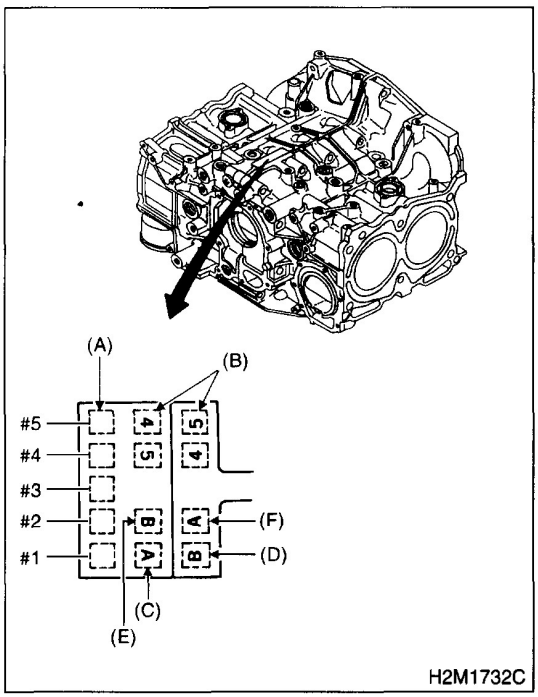

(A) Main journal size mark
(B) Cylinder block RH-LH combination mark
(C) #1 cylinder bore size mark
(D) #2 cylinder bore size mark
(E) #3 cylinder bore size mark
(F) #4 cylinder bore size mark

2) How to measure the inner diameter of each cylinder:
Measure the inner diameter of each cylinder in both the thrust and piston pin directions at the heights shown in the figure, using a cylinder bore gauge.

CAUTION:
Measurement should be performed at a temperature of 20°C (68°F).

Taper:
Standard
0.015 mm (0.0006 in)
Limit
0.050 mm (0.0020 in)

Out-of-roundness:
Standard
0.010 mm (0.0004 in)
Limit
0.050 mm (0.0020 in)

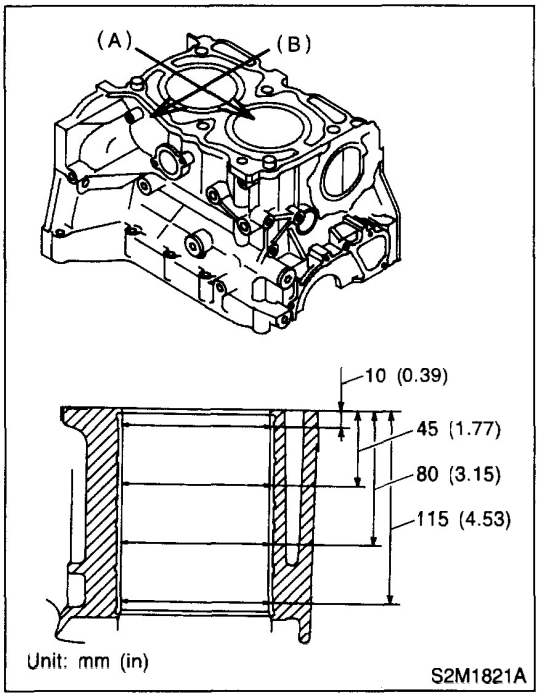

(A) Piston pin direction
(B) Thrust direction

3) When the piston is to be replaced due to general or cylinder wear, determine a suitable sized piston by measuring the piston clearance.

GETtheMANUALS.org

4) How to measure the outer diameter of each piston:
Measure the outer diameter of each piston at the height shown in the figure. (Thrust direction)

CAUTION:
Measurement should be performed at a temperature of 20°C (68°F).

Piston grade point H:
37.0 mm (1.457 in)

Piston outer diameter:
Standard
A: 99.485 — 99.495 mm
(3.9167 — 3.9171 in)
B: 99.475 — 99.485 mm
(3.9163 — 3.9167 in)
0.25 mm (0.0098 in) oversize
99.725 — 99.735 mm
(3.9262 — 3.9266 in)
0.50 mm (0.0197 in) oversize
99.975 — 99.985 mm
(3.9360 — 3.9364 in)

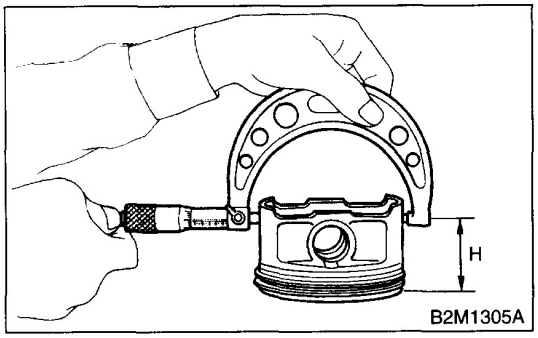

5) Calculate the clearance between cylinder and piston.

CAUTION:
Measurement should be performed at a temperature of 20°C (68°F).

Cylinder to piston clearance at 20°C (68°F):
Standard
0.010 — 0.030 mm (0.0004 — 0.0012 in)
Limit
0.050 mm (0.0020 in)

6) Boring and honing:
(1) If the value of taper, out-of-roundness, or cylinder-to-piston clearance measured exceeds the specified limit or if there is any damage on the cylinder wall, rebore it to use an oversize piston.

CAUTION:
When any of the cylinders needs reboring, all other cylinders must be bored at the same time, and use oversize pistons. Do not perform boring on one cylinder only, nor use an oversize piston for one cylinder only.

(2) If the cylinder inner diameter exceeds the limit after boring and honing, replace the crankcase.

CAUTION:
Immediately after reboring, the cylinder diameter may differ from its real diameter due to temperature rise. Thus, pay attention to this when measuring the cylinder diameter.

Limit of cylinder enlarging (boring):
0.5 mm (0.020 in)

3. PISTON AND PISTON PIN

1) Check the pistons and piston pins for damage, cracks, and wear and the piston ring grooves for wear and damage. Replace if defective.
2) Measure the piston-to-cylinder clearance at each cylinder. <Ref. to ME(SOHC)-82, CYLINDER AND PISTON, INSPECTION, Cylinder Block.> If any of the clearances is not within specification, replace the piston or bore the cylinder to use an oversize piston.

GETtheMANUALS.org

3) Make sure that the piston pin can be inserted into the piston pin hole with a thumb at 20°C (68°F). Replace if defective.

Standard clearance between piston pin and hole in piston:
Standard
0.004 — 0.008 mm (0.0002 — 0.0003 in)
Limit
0.020 mm (0.0008 in)

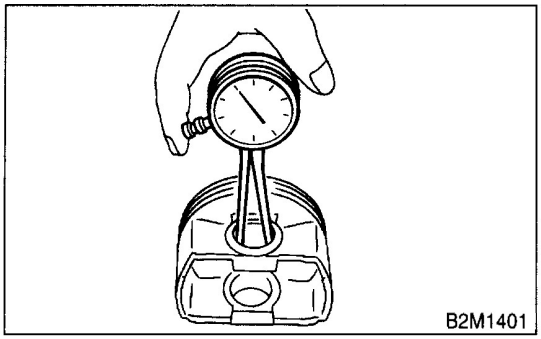
B2M1401

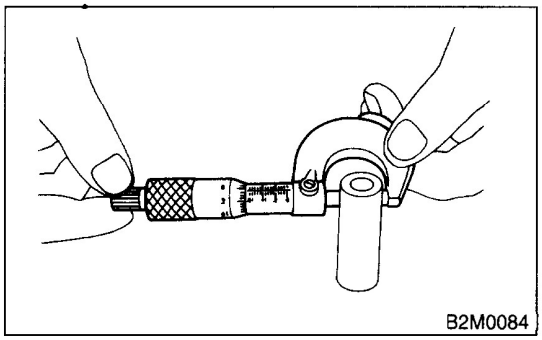
B2M0084

4) Check the circlip installation groove on the piston for burr (A). If necessary, remove burr from the groove so that the piston pin can lightly move.

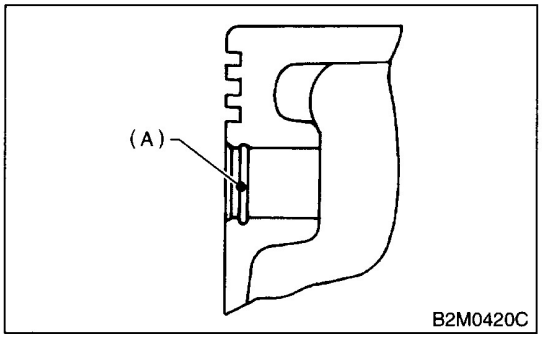

B2M0420C

5) Check the piston pin circlip for distortion, cracks and wear.

4. PISTON RING

1) If the piston ring is broken, damaged, or worn, or if its tension is insufficient, or when the piston is replaced, replace the piston ring with a new one of the same size as the piston.

CAUTION:
• "R" is marked on the end of the top and second rings. When installing the rings to the piston, face these marks upward.

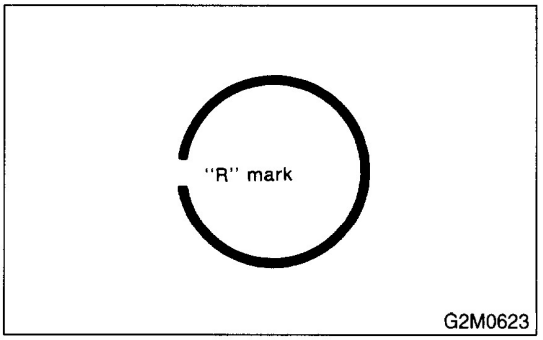

G2M0623

• The oil ring is a combined ring consisting of two rails and a spacer in between. When installing, be careful to assemble correctly.

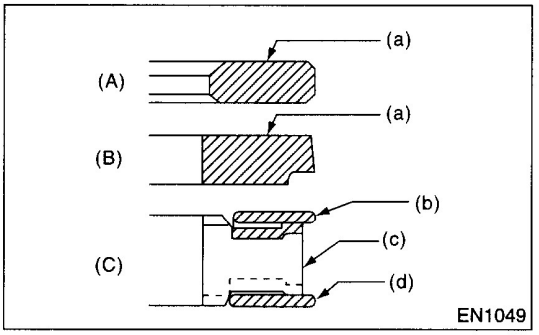

EN1049

(A) Top ring
(B) Second ring
(C) Oil ring
(a) R mark
(b) Upper rail
(c) Spacer
(d) Lower rail

GETtheMANUALS.org

2) Squarely place the piston ring and oil ring in cylinder, and measure the piston ring gap with a thickness gauge.

Unit: mm (in)

		Standard	Limit
Piston ring gap	Top ring	0.20 — 0.35 (0.0079 — 0.0138)	1.0 (0.039)
	Second ring	0.35 — 0.50 (0.0138 — 0.0197)	1.0 (0.039)
	Oil ring rail	0.20 — 0.70 (0.0079 — 0.0276)	1.5 (0.059)

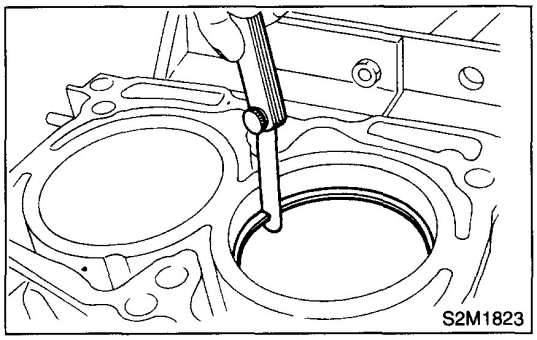
S2M1823

3) Measure the clearance between piston ring and piston ring groove with a thickness gauge.

CAUTION:
Before measuring the clearance, clean the piston ring groove and piston ring.

Unit: mm (in)

		Standard	Limit
Clearance between piston ring and piston ring groove	Top ring	0.040 — 0.080 (0.0016 — 0.0031)	0.15 (0.0059)
	Second ring	0.030 — 0.070 (0.0012 — 0.0028)	0.15 (0.0059)

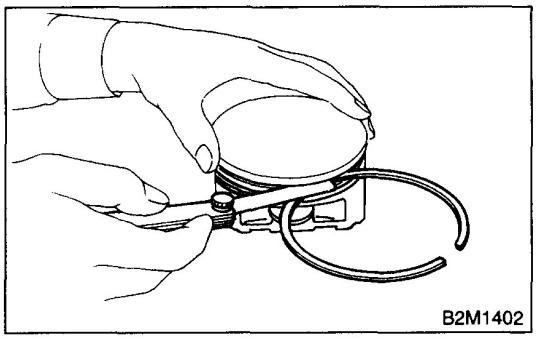
B2M1402

5. CONNECTING ROD

1) Replace the connecting rod, if the large or small end thrust surface is damaged.
2) Check for bend or twist using a connecting rod aligner. Replace the connecting rod if the bend or twist exceeds the limit.

Limit of bend or twist per 100 mm (3.94 in) in length:
0.10 mm (0.0039 in)

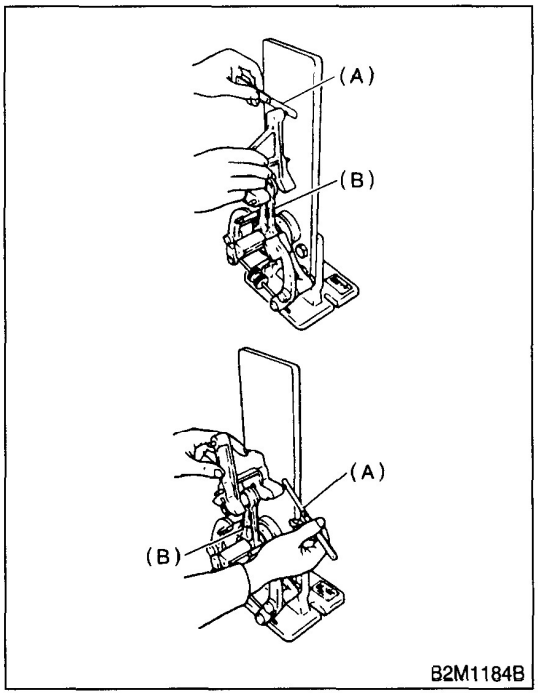

B2M1184B

(A) Thickness gauge
(B) Connecting rod

3) Install the connecting rod fitted with bearing to crankshaft and measure the side clearance (thrust clearance). Replace the connecting rod if the side clearance exceeds the specified limit.

Connecting rod side clearance:
Standard
0.070 — 0.330 mm (0.0028 — 0.0130 in)
Limit
0.4 mm (0.016 in)

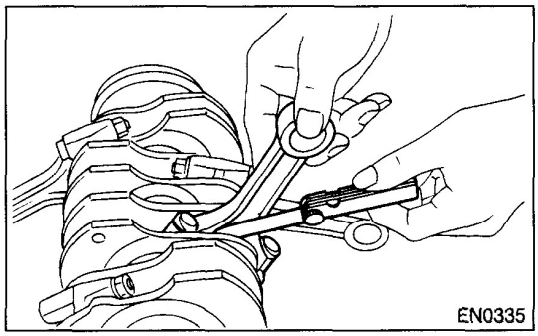
EN0335

GETTHEMANUALS.org

4) Inspect the connecting rod bearing for scar, peeling, seizure, melting, wear, etc.
5) Measure the oil clearance on individual connecting rod bearings by means of plastigauge. If any oil clearance is not within specification, replace the defective bearing with a new one of standard size or undersize as necessary. (See the table below.)

Connecting rod oil clearance:
Standard
0.020 — 0.046 mm (0.0008 — 0.0018 in)
Limit
0.05 mm (0.0020 in)

Unit: mm (in)

Bearing	Bearing size (Thickness at center)	Outer diameter of crank pin
Standard	1.486 — 1.498 (0.0585 — 0.0599)	51.984 — 52.000 (2.0466 — 2.0472)
0.03 (0.0012) undersize	1.504 — 1.512 (0.0592 — 0.0595)	51.954 — 51.970 (2.0454 — 2.0461)
0.05 (0.0020) undersize	1.514 — 1.522 (0.0596 — 0.0599)	51.934 — 51.950 (2.0446 — 2.0453)
0.25 (0.0098) undersize	1.614 — 1.622 (0.0635 — 0.0639)	51.734 — 51.750 (2.0368 — 2.0374)

6) Inspect the bushing at connecting rod small end, and replace if worn or damaged. Also measure the piston pin clearance at the connecting rod small end.

Clearance between piston pin and bushing:
Standard
0 — 0.022 mm (0 — 0.0009 in)
Limit
0.030 mm (0.0012 in)

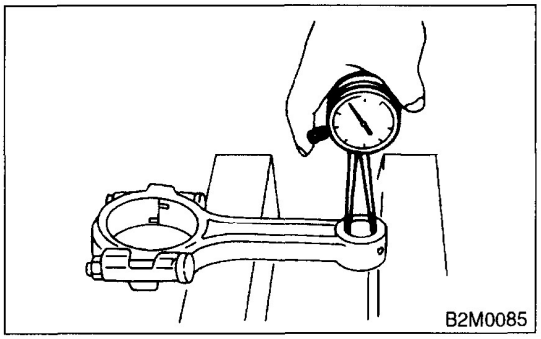
B2M0085

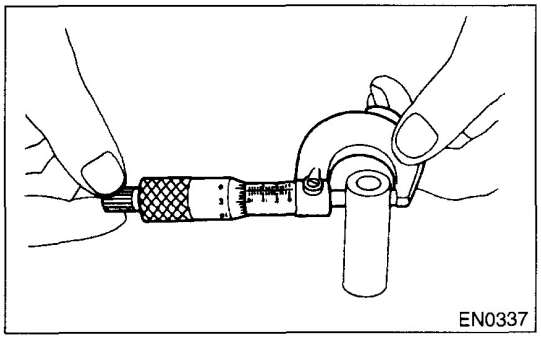
EN0337

7) Replacement procedure is as follows:
(1) Remove the bushing from connecting rod with ST and press.
(2) Press the bushing with ST after applying oil on the periphery of bushing.

ST 499037100 CONNECTING ROD BUSHING REMOVER AND INSTALLER

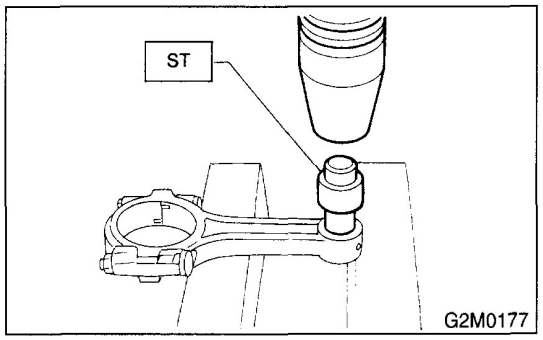

G2M0177

(3) Make two 3 mm (0.12 in) holes in bushing. Ream the inside of bushing.
(4) After completion of reaming, clean the bushing to remove chips.

GETTHEMANUALS.org

6. CRANKSHAFT AND CRANKSHAFT BEARING

1) Clean the crankshaft completely and check for cracks by means of red lead check etc., and replace if defective.
2) Measure the crankshaft bend, and correct or replace if it exceeds the limit.

CAUTION:
If a suitable V-block is not available, install #1 and #5 crankshaft bearing on cylinder block, position crankshaft on these bearings and measure the crankshaft bend using a dial gauge.

Crankshaft bend limit:
0.035 mm (0.0014 in)

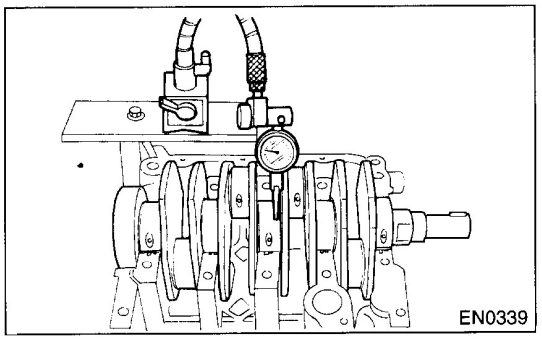
EN0339

3) Inspect the crank journal and crank pin for wear. If they are not within the specifications, replace the bearing with a suitable (undersize) one, and replace or recondition crankshaft as necessary. When grinding the crank journal or crank pin, finish them to the specified dimensions according to the undersize bearing to be used.

Crank pin and crank journal:
Out-of-roundness
0.020 mm (0.0008 in) or less
Taper limit
0.07 mm (0.0028 in)
Grinding limit
0.250 mm (0.0098 in)

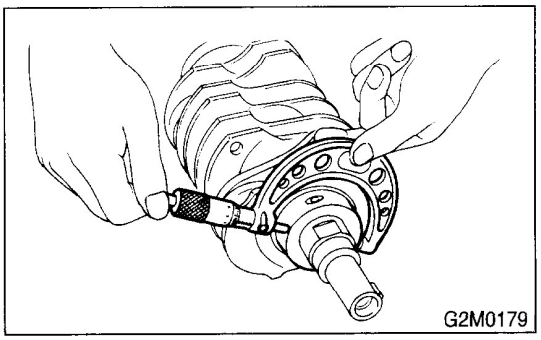
G2M0179

Unit: mm (in)

		Crank journal diameter		Crank pin diameter
		#1, #3	#2, #4, #5	
Standard	Journal O.D.	59.992 — 60.008 (2.3619 — 2.3625)	59.992 — 60.008 (2.3619 — 2.3625)	51.984 — 52.000 (2.0466 — 2.0472)
	Bearing size (Thickness at center)	1.998 — 2.011 (0.0787 — 0.0792)	2.000 — 2.013 (0.0787 — 0.0793)	1.492 — 1.501 (0.0587 — 0.0591)
0.03 (0.0012) undersize	Journal O.D.	59.962 — 59.978 (2.3607 — 2.3613)	59.962 — 59.978 (2.3607 — 2.3613)	51.954 — 51.970 (2.0454 — 2.0461)
	Bearing size (Thickness at center)	2.017 — 2.020 (0.0794 — 0.0795)	2.019 — 2.022 (0.0795 — 0.0796)	1.510 — 1.513 (0.0594 — 0.0596)
0.05 (0.0020) undersize	Journal O.D.	59.942 — 59.958 (2.3599 — 2.3605)	59.942 — 59.958 (2.3599 — 2.3605)	51.934 — 51.950 (2.0446 — 2.0453)
	Bearing size (Thickness at center)	2.027 — 2.030 (0.0798 — 0.0799)	2.029 — 2.032 (0.0799 — 0.0800)	1.520 — 1.523 (0.0598 — 0.0600)
0.25 (0.0098) undersize	Journal O.D.	59.742 — 59.758 (2.3520 — 2.3527)	59.742 — 59.758 (2.3520 — 2.3527)	51.734 — 51.750 (2.0368 — 2.0374)
	Bearing size (Thickness at center)	2.127 — 2.130 (0.0837 — 0.0839)	2.129 — 2.132 (0.0838 — 0.0839)	1.620 — 1.623 (0.0638 — 0.0639)

O.D.: Outer Diameter

GETMANUALS.org

4) Measure the thrust clearance of crankshaft at center bearing. If the clearance exceeds the limit, replace the bearing.

Crankshaft thrust clearance:
Standard
0.030 — 0.115 mm (0.0012 — 0.0045 in)
Limit
0.25 mm (0.0098 in)

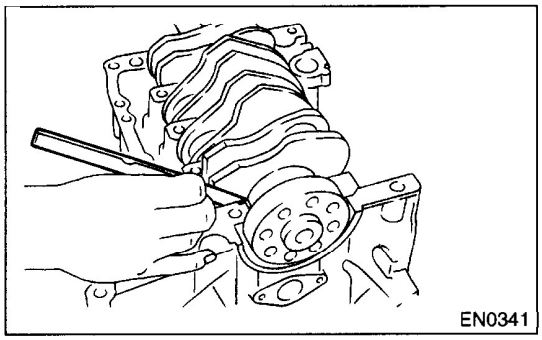
EN0341

5) Inspect individual crankshaft bearings for signs of flaking, seizure, melting, and wear.
6) Measure the oil clearance on each crankshaft bearing by means of plastigauge. If the measurement is not within the specification, replace the defective bearing with an undersize one, and replace or recondition the crankshaft as necessary.

Unit: mm (in)	
Crankshaft oil clearance	
Standard	0.010 — 0.030 (0.0004 — 0.0012)
Limit	0.040 (0.0016)

GETMANUALS.org

22.Engine Trouble in General

A: INSPECTION

NOTE:
"RANK" shown in the chart refers to the possibility of reason for the trouble in order ("Very often" to "Rarely")
A — Very often
B — Sometimes
C — Rarely

TROUBLE	PROBLEM PARTS, ETC.	POSSIBLE CAUSE	RANK
1. Engine will not start.			
1) Starter does not turn.	• Starter	• Defective battery-to-starter harness	B
		• Defective starter switch	C
		• Defective inhibitor switch or neutral switch	C
		• Defective starter	B
	• Battery	• Poor terminal connection	A
		• Run-down battery	A
		• Defective charging system	B
	• Friction	• Seizure of crankshaft and connecting rod bearing	C
		• Seized camshaft	C
		• Seized or stuck piston and cylinder	C
2) Initial combustion does not occur.	• Starter	• Defective starter	C
	• Engine control system <Ref. to EN(SOHC)-2, Basic Diagnostic Procedure.>		A
	• Fuel line	• Defective fuel pump and relay	A
		• Lack of or insufficient fuel	B
	• Belt	• Defective	B
		• Defective timing	B
	• Compression	• Incorrect valve clearance	C
		• Loosened spark plugs or defective gasket	C
		• Loosened cylinder head bolts or defective gasket	C
		• Improper valve seating	C
		• Defective valve stem	C
		• Worn or broken valve spring	B
		• Worn or stuck piston rings, cylinder and piston	C
		• Incorrect valve timing	B
		• Improper engine oil (low viscosity)	B

GETMANUALS.org

ENGINE TROUBLE IN GENERAL

TROUBLE	PROBLEM PARTS, ETC.	POSSIBLE CAUSE	RANK
3) Initial combustion occur.	• Engine control system <Ref. to EN(SOHC)-2, Basic Diagnostic Procedure.>		A
	• Intake system	• Defective intake manifold gasket	B
		• Defective throttle body gasket	B
	• Fuel line	• Defective fuel pump and relay	C
		• Clogged fuel line	C
		• Lack of or insufficient fuel	B
	• Belt	• Defective	B
		• Defective timing	B
	• Compression	• Incorrect valve clearance	C
		• Loosened spark plugs or defective gasket	C
		• Loosened cylinder head bolts or defective gasket	C
		• Improper valve seating	C
		• Defective valve stem	C
		• Worn or broken valve spring	B
		• Worn or stuck piston rings, cylinder and piston	C
		• Incorrect valve timing	B
		• Improper engine oil (low viscosity)	B
4) Engine stalls after initial combustion.	• Engine control system <Ref. to EN(SOHC)-2, Basic Diagnostic Procedure.>		A
	• Intake system	• Loosened or cracked intake duct	B
		• Loosened or cracked PCV hose	C
		• Loosened or cracked vacuum hose	C
		• Defective intake manifold gasket	B
		• Defective throttle body gasket	B
		• Dirty air cleaner element	C
	• Fuel line	• Clogged fuel line	C
		• Lack of or insufficient fuel	B
	• Belt	• Defective	B
		• Defective timing	B
	• Compression	• Incorrect valve clearance	C
		• Loosened spark plugs or defective gasket	C
		• Loosened cylinder head bolts or defective gasket	C
		• Improper valve seating	C
		• Defective valve stem	C
		• Worn or broken valve spring	B
		• Worn or stuck piston rings, cylinder and piston	C
		• Incorrect valve timing	B
		• Improper engine oil (low viscosity)	B

GETMANUALS.org

TROUBLE	PROBLEM PARTS, ETC.	POSSIBLE CAUSE	RANK
2. Rough idle and engine stall	• Engine control system <Ref. to EN(SOHC)-2, Basic Diagnostic Procedure.>		A
	• Intake system	• Loosened or cracked intake duct	A
		• Loosened or cracked PCV hose	A
		• Loosened or cracked vacuum hose	A
		• Defective intake manifold gasket	B
		• Defective throttle body gasket	B
		• Defective PCV valve	C
		• Loosened oil filler cap	B
		• Dirty air cleaner element	C
	• Fuel line	• Defective fuel pump and relay	C
		• Clogged fuel line	C
		• Lack of or insufficient fuel	B
	• Belt	• Defective timing	C
	• Compression	• Incorrect valve clearance	B
		• Loosened spark plugs or defective gasket	B
		• Loosened cylinder head bolts or defective gasket	B
		• Improper valve seating	B
		• Defective valve stem	C
		• Worn or broken valve spring	B
		• Worn or stuck piston rings, cylinder and piston	B
		• Incorrect valve timing	A
		• Improper engine oil (low viscosity)	B
	• Lubrication system	• Incorrect oil pressure	B
		• Defective rocker cover gasket	C
	• Cooling system	• Overheating	C
	• Others	• Malfunction of evaporative emission control system	A
		• Stuck or damaged throttle valve	B
		• Accelerator cable out of adjustment	C

GETMANUALS.org

ENGINE TROUBLE IN GENERAL

TROUBLE	PROBLEM PARTS, ETC.	POSSIBLE CAUSE	RANK
3. Low output, hesitation and poor acceleration	• Engine control system <Ref. to EN(SOHC)-2, Basic Diagnostic Procedure.>		A
	• Intake system	• Loosened or cracked intake duct	A
		• Loosened or cracked PCV hose	A
		• Loosened or cracked vacuum hose	B
		• Defective intake manifold gasket	B
		• Defective throttle body gasket	B
		• Defective PCV valve	B
		• Loosened oil filler cap	B
		• Dirty air cleaner element	A
	• Fuel line	• Defective fuel pump and relay	B
		• Clogged fuel line	B
		• Lack of or insufficient fuel	C
	• Belt	• Defective timing	B
	• Compression	• Incorrect valve clearance	B
		• Loosened spark plugs or defective gasket	B
		• Loosened cylinder head bolts or defective gasket	B
		• Improper valve seating	B
		• Defective valve stem	C
		• Worn or broken valve spring	B
		• Worn or stuck piston rings, cylinder and piston	C
		• Incorrect valve timing	A
		• Improper engine oil (low viscosity)	B
	• Lubrication system	• Incorrect oil pressure	B
	• Cooling system	• Overheating	C
		• Over cooling	C
	• Others	• Malfunction of evaporative emission control system	A
4. Surging	• Engine control system <Ref. to EN(SOHC)-2, Basic Diagnostic Procedure.>		A
	• Intake system	• Loosened or cracked intake duct	A
		• Loosened or cracked PCV hose	A
		• Loosened or cracked vacuum hose	A
		• Defective intake manifold gasket	B
		• Defective throttle body gasket	B
		• Defective PCV valve	B
		• Loosened oil filler cap	B
		• Dirty air cleaner element	B
	• Fuel line	• Defective fuel pump and relay	B
		• Clogged fuel line	B
		• Lack of or insufficient fuel	C
	• Belt	• Defective timing	B
	• Compression	• Incorrect valve clearance	B
		• Loosened spark plugs or defective gasket	C
		• Loosened cylinder head bolts or defective gasket	C
		• Improper valve seating	C
		• Defective valve stem	C
		• Worn or broken valve spring	C
		• Worn or stuck piston rings, cylinder and piston	C
		• Incorrect valve timing	A
		• Improper engine oil (low viscosity)	B
	• Cooling system	• Overheating	B
	• Others	• Malfunction of evaporative emission control system	C

GETMANUALS.org

TROUBLE	PROBLEM PARTS, ETC.	POSSIBLE CAUSE	RANK
5. Engine does not return to idle.	• Engine control system <Ref. to EN(SOHC)-2, Basic Diagnostic Procedure.>		A
	• Intake system	• Loosened or cracked vacuum hose	A
	• Others	• Stuck or damaged throttle valve	A
		• Accelerator cable out of adjustment	B
6. Dieseling (Run-on)	• Engine control system <Ref. to EN(SOHC)-2, Basic Diagnostic Procedure.>		A
	• Cooling system	• Overheating	B
	• Others	• Malfunction of evaporative emission control system	B
7. After burning in exhaust system	• Engine control system <Ref. to EN(SOHC)-2, Basic Diagnostic Procedure.>		A
	• Intake system	• Loosened or cracked intake duct	C
		• Loosened or cracked PCV hose	C
		• Loosened or cracked vacuum hose	B
		• Defective PCV valve	B
		• Loosened oil filler cap	C
	• Belt	• Defective timing	B
	• Compression	• Incorrect valve clearance	B
		• Loosened spark plugs or defective gasket	C
		• Loosened cylinder head bolts or defective gasket	C
		• Improper valve seating	B
		• Defective valve stem	C
		• Worn or broken valve spring	C
		• Worn or stuck piston rings, cylinder and piston	C
		• Incorrect valve timing	A
	• Lubrication system	• Incorrect oil pressure	C
	• Cooling system	• Over cooling	C
	• Others	• Malfunction of evaporative emission control system	C
8. Knocking	• Engine control system <Ref. to EN(SOHC)-2, Basic Diagnostic Procedure.>		A
	• Intake system	• Loosened oil filler cap	B
	• Belt	• Defective timing	B
	• Compression	• Incorrect valve clearance	C
		• Incorrect valve timing	B
	• Cooling system	• Overheating	A
9. Excessive engine oil consumption	• Intake system	• Loosened or cracked PCV hose	A
		• Defective PCV valve	B
		• Loosened oil filler cap	C
	• Compression	• Defective valve stem	A
		• Worn or stuck piston rings, cylinder and piston	A
	• Lubrication system	• Loosened oil pump attaching bolts and defective gasket	B
		• Defective oil filter o-ring	B
		• Defective crankshaft oil seal	B
		• Defective rocker cover gasket	B
		• Loosened oil drain plug or defective gasket	B
		• Loosened oil pan fitting bolts or defective oil pan	B

GETTHEMANUALS.org

TROUBLE	PROBLEM PARTS, ETC.	POSSIBLE CAUSE	RANK
10. Excessive fuel consumption	• Engine control system <Ref. to EN(SOHC)-2, Basic Diagnostic Procedure.>		A
	• Intake system	• Dirty air cleaner element	A
	• Belt	• Defective timing	B
	• Compression	• Incorrect valve clearance	B
		• Loosened spark plugs or defective gasket	C
		• Loosened cylinder head bolts or defective gasket	C
		• Improper valve seating	B
		• Defective valve stem	C
		• Worn or broken valve spring	C
		• Worn or stuck piston rings, cylinder and piston	B
		• Incorrect valve timing	B
	• Lubrication system	• Incorrect oil pressure	C
	• Cooling system	• Over cooling	C
	• Others	• Accelerator cable out of adjustment	B

GETtheMANUALS.org

23.Engine Noise

A: INSPECTION

Type of sound	Condition	Possible cause
Regular clicking sound	Sound increases as engine speed increases.	• Valve mechanism is defective. • Incorrect valve clearance • Worn valve rocker • Worn camshaft • Broken valve spring
Heavy and dull clank	Oil pressure is low.	• Worn crankshaft main bearing • Worn connecting rod bearing (big end)
	Oil pressure is normal.	• Loose flywheel mounting bolts • Damaged engine mounting
High-pitched clank (Spark knock)	Sound is noticeable when accelerating with an overload.	• Ignition timing advanced • Accumulation of carbon inside combustion chamber • Wrong spark plug • Improper gasoline
Clank when engine speed is medium (1,000 to 2,000 rpm).	Sound is reduced when fuel injector connector of noisy cylinder is disconnected. (NOTE*)	• Worn crankshaft main bearing • Worn bearing at crankshaft end of connecting rod
Knocking sound when engine is operating under idling speed and engine is warm	Sound is reduced when fuel injector connector of noisy cylinder is disconnected. (NOTE*)	• Worn cylinder liner and piston ring • Broken or stuck piston ring • Worn piston pin and hole at piston end of connecting rod
	Sound is not reduced if each fuel injector connector is disconnected in turn. (NOTE*)	• Unusually worn valve lifter • Worn cam gear • Worn camshaft journal bore in crankcase
Squeaky sound	—	• Insufficient generator lubrication
Rubbing sound	—	• Defective generator brush and rotor contact
Gear scream when starting engine	—	• Defective ignition starter switch • Worn gear and starter pinion
Sound like polishing glass with a dry cloth	—	• Loose drive belt • Defective water pump shaft
Hissing sound	—	• Loss of compression • Air leakage in air intake system, hoses, connections or manifolds
Timing belt noise	—	• Loose timing belt • Belt contacting case/adjacent part
Valve tappet noise	—	• Incorrect valve clearance

NOTE*:
When disconnecting the fuel injector connector, Malfunction Indicator Light (CHECK ENGINE light) illuminates and trouble code is stored in ECM memory.
Therefore, carry out the CLEAR MEMORY MODE <Ref. to EN(SOHC)-43, OPERATION, Clear Memory Mode.> and INSPECTION MODE <Ref. to EN(SOHC)-40, OPERATION, Inspection Mode.> after connecting the fuel injector connector.

GETtheMANUALS.org

GETthisMANUALS.org

EXHAUST

EX(SOHC)

		Page
1.	General Description	2
2.	Front Exhaust Pipe	5
3.	Center Exhaust Pipe	8
4.	Rear Exhaust Pipe	9
5.	Muffler	11

GETtheMANUALS.org

1. General Description

A: COMPONENT

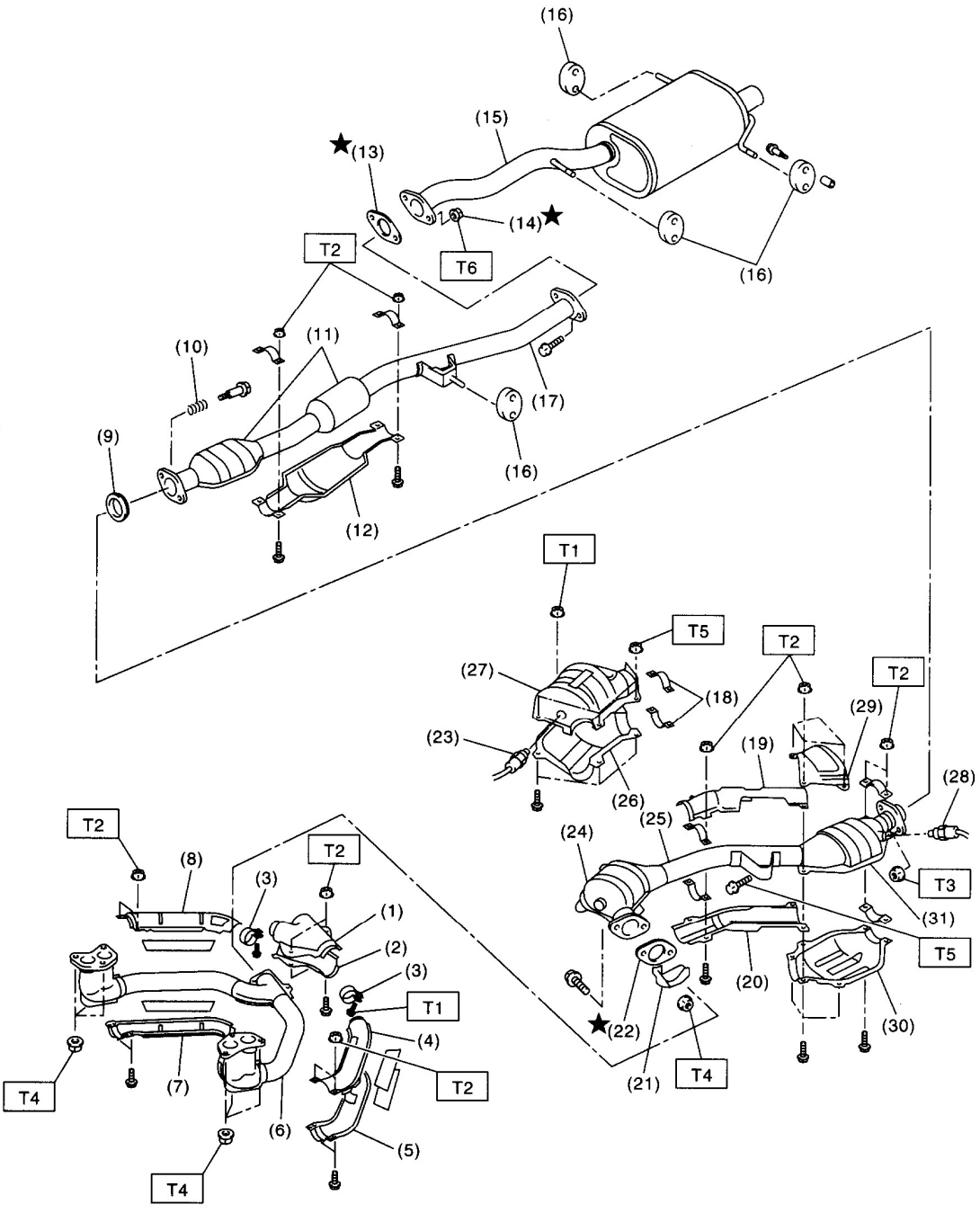

EN1048

GETtheMANUALS.org

(1) Upper front exhaust pipe cover CTR
(2) Lower front exhaust pipe cover CTR
(3) Clamp
(4) Upper front exhaust pipe cover LH
(5) Lower front exhaust pipe cover LH
(6) Front exhaust pipe
(7) Lower front exhaust pipe cover RH
(8) Upper front exhaust pipe cover RH
(9) Gasket
(10) Spring
(11) Chamber
(12) Rear exhaust pipe cover
(13) Gasket
(14) Self-locking nut
(15) Muffler
(16) Cushion rubber
(17) Rear exhaust pipe
(18) Clamp
(19) Upper center exhaust pipe cover
(20) Lower center exhaust pipe cover
(21) Protector
(22) Gasket
(23) Front oxygen (A/F) sensor
(24) Front catalytic converter
(25) Center exhaust pipe
(26) Lower front catalytic converter cover
(27) Upper front catalytic converter cover
(28) Rear oxygen sensor
(29) Upper rear catalytic converter cover
(30) Lower rear catalytic converter cover
(31) Rear catalytic converter

Tightening torque: N·m (kgf-m, ft-lb)

T1: 8 (0.8, 5.8)
T2: 13 (1.3, 9.4)
T3: 18 (1.8, 13.0)
T4: 30 (3.1, 22.4)
T5: 35 (3.6, 26.0)
T6: 48 (4.9, 35.4)

GETtheMANUALS.org

B: CAUTION

- Wear working clothing, including a cap, protective goggles, and protective shoes during operation.
- Remove contamination including dirt and corrosion before removal, installation or disassembly.
- Keep the disassembled parts in order and protect them from dust or dirt.
- Before removal, installation or disassembly, be sure to clarify the failure. Avoid unnecessary removal, installation, disassembly, and replacement.
- Be careful not to burn your hands, because each part on the vehicle is hot after running.
- Be sure to tighten fasteners including bolts and nuts to the specified torque.
- Place shop jacks or safety stands at the specified points.
- Before disconnecting electrical connectors of sensors or units, be sure to disconnect negative terminal from battery.

GETtheMANUALS.org

2. Front Exhaust Pipe

A: REMOVAL

1) Disconnect the battery ground cable.

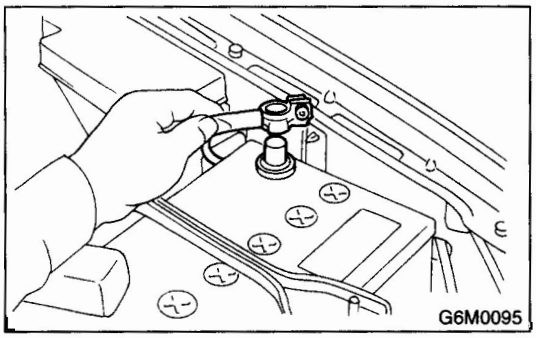

2) Disconnect the front oxygen (A/F) sensor connector.

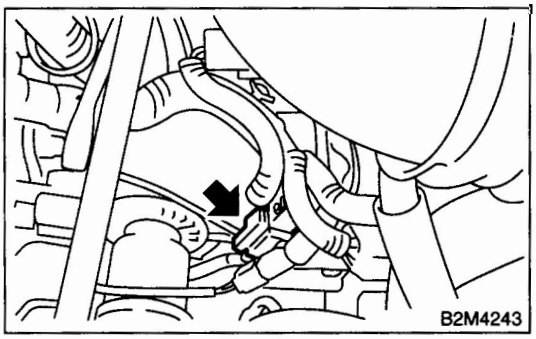

3) Disconnect the rear oxygen sensor connector.

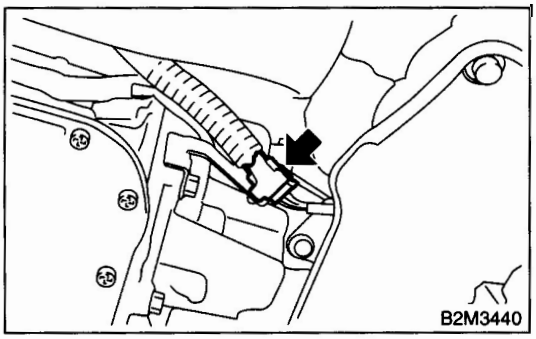

4) Lift-up the vehicle.
5) Separate the front and center exhaust pipe assembly from rear exhaust pipe.

WARNING:
Be careful, the exhaust pipe is hot.

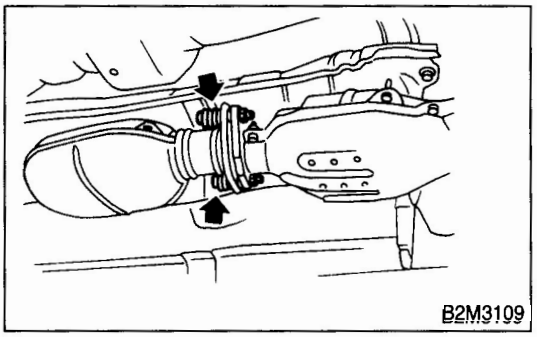

6) Remove the under cover.
7) Remove the bolts which hold front exhaust pipe onto cylinder heads.

CAUTION:
Be careful not to pull down the front and center exhaust pipe assembly.

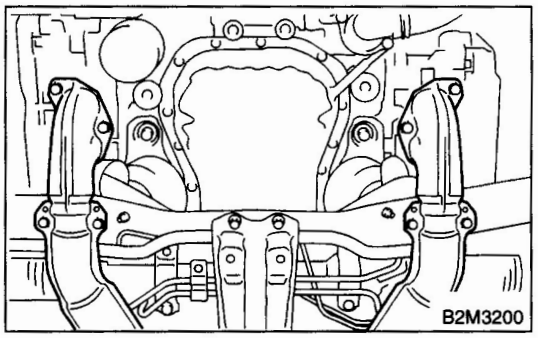

8) Remove the bolt which installs front and center exhaust pipe assembly to hanger bracket.

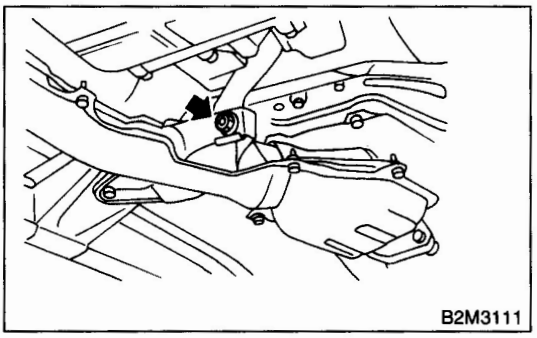

GETtheMANUALS.org

9) Remove the front and center exhaust pipe assembly from the vehicle.

CAUTION:
- **Be careful not to let the front and center exhaust pipe assembly fall off when removing as it is quite heavy.**
- **After removing the front and center exhaust assembly, do not apply excessive pulling force on the rear exhaust pipe.**

10) Separate the front exhaust pipe from center exhaust pipe.

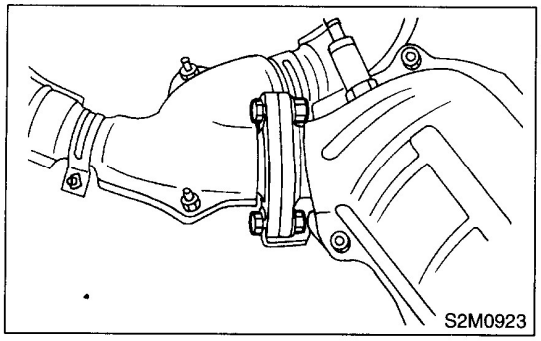

B: INSTALLATION

1) Install the front exhaust pipe to center exhaust pipe.

NOTE:
Replace the gaskets with new ones.

Tightening torque:
30 N·m (3.1 kgf-m, 22.4 ft-lb)

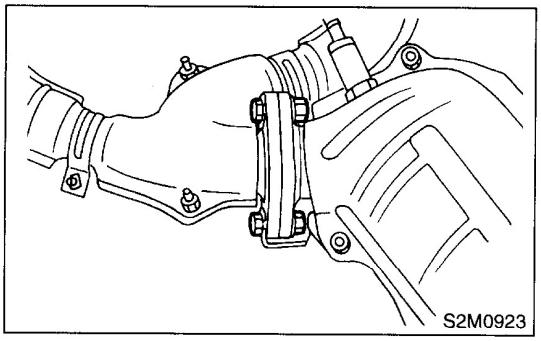

2) Install the front and center exhaust pipe assembly to the vehicle.
3) Temporarily tighten the bolt which installs front and center exhaust pipe assembly to hanger bracket.

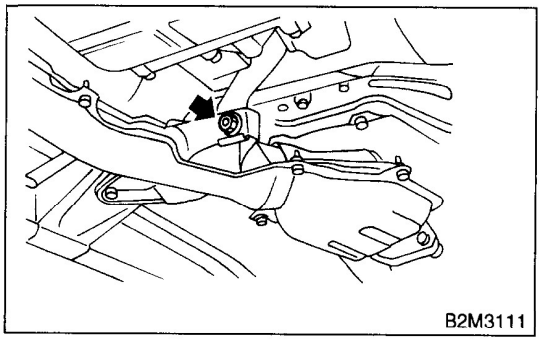

4) Tighten the bolts which hold front exhaust pipe onto cylinder heads.

Tightening torque:
30 N·m (3.1 kgf-m, 22.4 ft-lb)

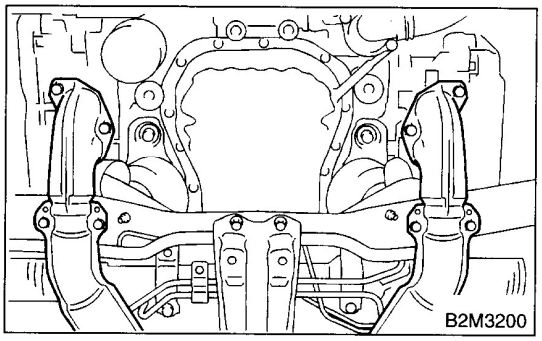

5) Install the under cover.

GETtheMANUALS.org

6) Tighten the bolts which install front and center exhaust pipe assembly to rear exhaust pipe.

Tightening torque:
18 N·m (1.8 kgf-m, 13.0 ft-lb)

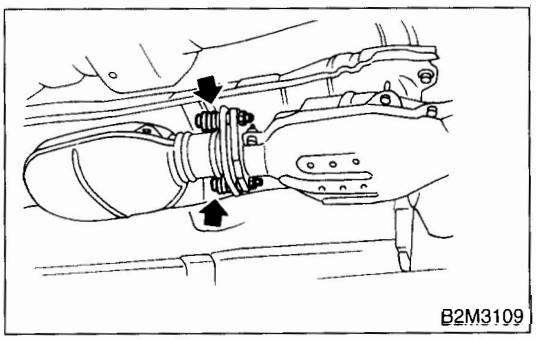
B2M3109

7) Tighten the bolt which holds front and center exhaust pipe assembly to hanger bracket.

Tightening torque:
35 N·m (3.6 kgf-m, 26.0 ft-lb)

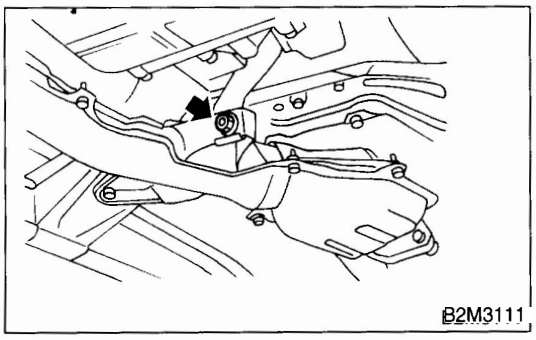
B2M3111

8) Lower the vehicle.
9) Connect the rear oxygen sensor connector.

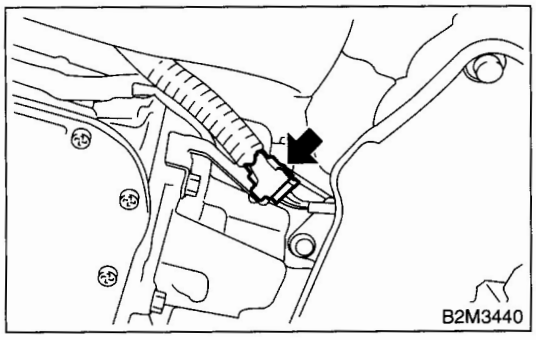
B2M3440

10) Connect the front oxygen (A/F) sensor connector.

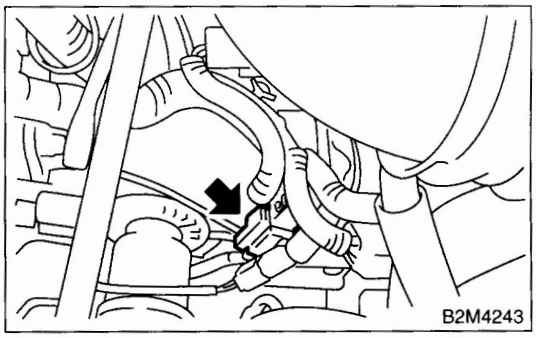
B2M4243

11) Connect the battery ground cable.

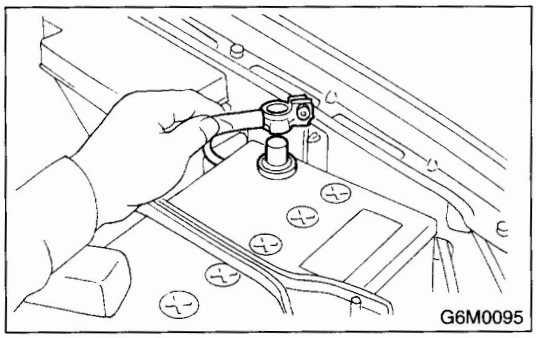
G6M0095

C: INSPECTION

1) Make sure there are no exhaust leaks from connections and welds.
2) Make sure there are no holes or rusting.

GETtheMANUALS.org

3. Center Exhaust Pipe

A: REMOVAL

After removing the center and front exhaust pipes as one unit, separate them. Refer to the procedure for removing the front exhaust pipe. <Ref. to EX(SOHC)-5, REMOVAL, Front Exhaust Pipe.>

B: INSTALLATION

Install the center exhaust pipe and front exhaust pipe as one unit. Refer to the procedure for installing the front exhaust pipe. <Ref. to EX(SOHC)-6, INSTALLATION, Front Exhaust Pipe.>

C: INSPECTION

1) Make sure there are no exhaust leaks from connections and welds.
2) Make sure there are no holes or rusting.

GETtheMANUALS.org

4. Rear Exhaust Pipe

A: REMOVAL

1) Lift-up the vehicle.
2) Separate the rear exhaust pipe from center exhaust pipe.

CAUTION:
Be careful, the exhaust pipe is hot.

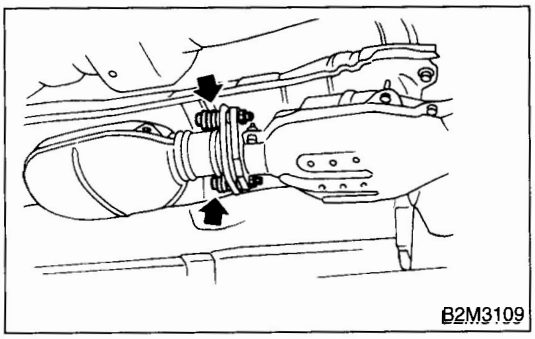

3) Separate the rear exhaust pipe from muffler.

CAUTION:
Be careful not to pull down rear the exhaust pipe.

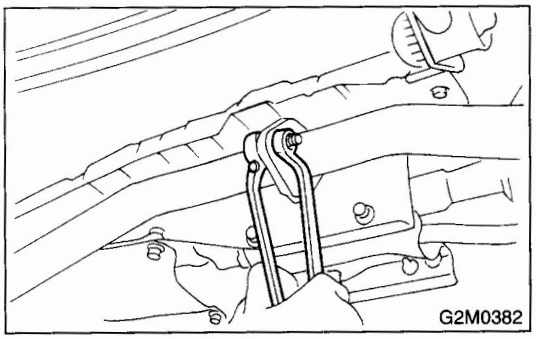

4) Remove rear exhaust pipe bracket from rubber cushion.

NOTE:
To facilitate removal, apply a coat of SUBARU CRC to pipe bracket in advance.

SUBARU CRC (Part No. 004301003)

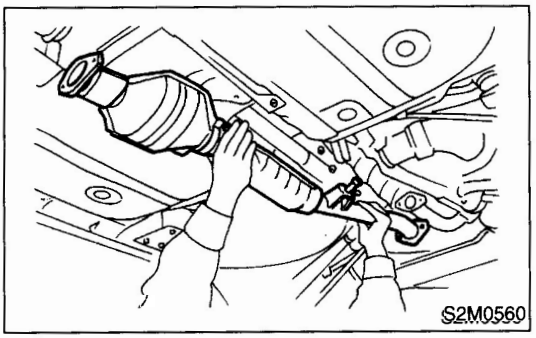

B: INSTALLATION

NOTE:
Replace the gaskets with new ones.

1) Install rear exhaust pipe bracket to rubber cushion.

NOTE:
To facilitate installation, apply a coat of SUBARU CRC to mating area of rubber cushion in advance.

SUBARU CRC (Part No. 004301003)

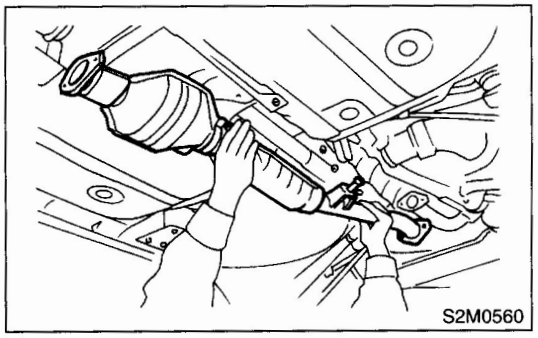

2) Install the rear exhaust pipe to muffler.

Tightening torque:
48 N·m (4.9 kgf-m, 35.4 ft-lb)

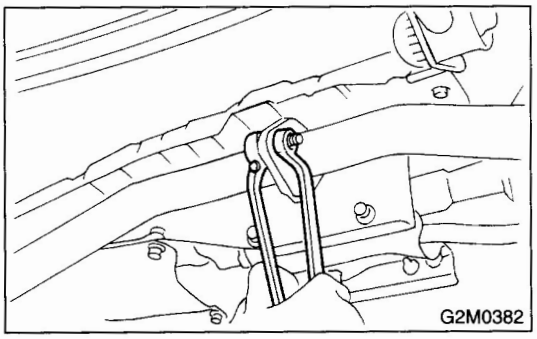

3) Install the rear exhaust pipe to center exhaust pipe.

Tightening torque:
18 N·m (1.8 kgf-m, 13.0 ft-lb)

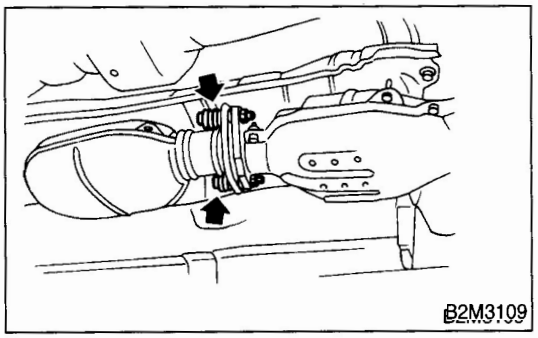

GETtheMANUALS.org

C: INSPECTION

1) Make sure there are no exhaust leaks from connections and welds.
2) Make sure there are no holes or rusting.
3) Make sure the cushion rubber is not worn or cracked.

GETtheMANUALS.org

5. Muffler

A: REMOVAL

1) Separate the muffler from rear exhaust pipe.

CAUTION:
Be careful, the exhaust pipe is hot.

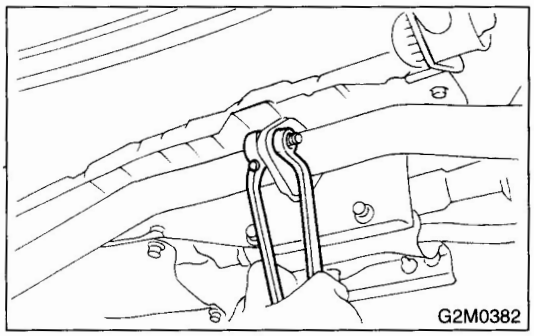

2) Apply a coat of SUBARU CRC to mating area of rubber cushions in advance.

SUBARU CRC (Part No. 004301003)

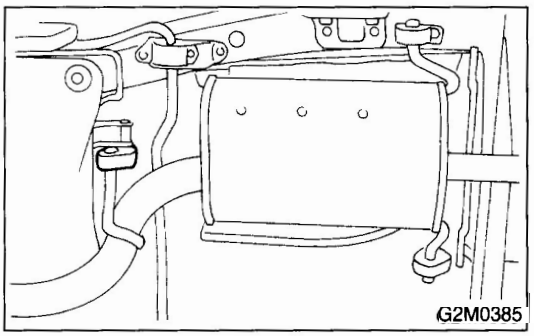

3) Remove the front, left and right rubber cushion, and detach muffler assembly.

B: INSTALLATION

1) Install in the reverse order of removal.

NOTE:
Replace the gasket with a new one.

Tightening torque:
48 N·m (4.9 kgf-m, 35.4 ft-lb)

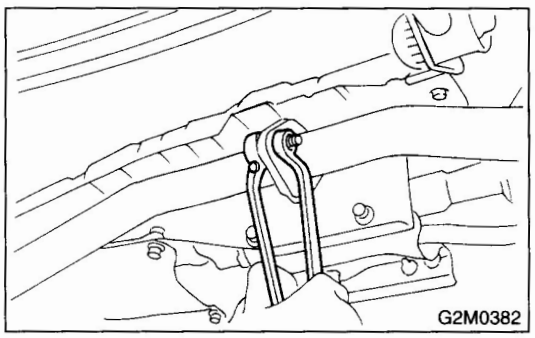

C: INSPECTION

1) Make sure there are no exhaust leaks from connections and welds.
2) Make sure there are no holes or rusting.
3) Make sure the cushion rubber is not worn or cracked.

GETtheMANUALS.org

MUFFLER

GETtheMANUALS.org