FIAT® 500e

2019

OWNER'S MANUAL

VEHICLES SOLD IN CANADA

With respect to any Vehicles Sold in Canada, the name FCA US LLC shall be deemed to be deleted and the name FCA Canada Inc. used in substitution therefore.

DRIVING AND ALCOHOL

Drunken driving is one of the most frequent causes of accidents.

Your driving ability can be seriously impaired with blood alcohol levels far below the legal minimum. If you are drinking, don't drive. Ride with a designated non-drinking driver, call a cab, a friend, or use public transportation.

WARNING!
Driving after drinking can lead to an accident. Your perceptions are less sharp, your reflexes are slower, and your judgment is impaired when you have been drinking. Never drink and then drive.

This manual illustrates and describes the operation of features and equipment that are either standard or optional on this vehicle. This manual may also include a description of features and equipment that are no longer available or were not ordered on this vehicle. Please disregard any features and equipment described in this manual that are not on this vehicle.

FCA US LLC reserves the right to make changes in design and specifications, and/or make additions to or improvements to its products without imposing any obligation upon itself to install them on products previously manufactured.

Copyright © 2018 FCA US LLC

TABLE OF CONTENTS

SECTION		PAGE
1	INTRODUCTION	3
2	GRAPHICAL TABLE OF CONTENTS	7
3	GETTING TO KNOW YOUR VEHICLE	13
4	GETTING TO KNOW YOUR INSTRUMENT PANEL	85
5	SAFETY	101
6	STARTING AND OPERATING	155
7	IN CASE OF EMERGENCY	181
8	SERVICING AND MAINTENANCE	209
9	TECHNICAL SPECIFICATIONS	253
10	MULTIMEDIA	259
11	CUSTOMER ASSISTANCE	281
12	INDEX	287

INTRODUCTION

CONTENTS

■ INTRODUCTION 4
■ HOW TO USE THIS MANUAL 4
□ Essential Information 4
□ Symbols 4
■ WARNINGS AND CAUTIONS 5
■ VEHICLE MODIFICATIONS/ALTERATIONS 5

INTRODUCTION

Congratulations on selecting your new FIAT 500e. Be assured that your 500e represents an elegant marriage of technology and Italian styling that is as good for the environment as it is fun to drive!

This Owner's Manual has been prepared with the assistance of service and engineering specialists to acquaint you with the operation, understanding and maintenance of your 500e. It is supplemented by Warranty Information, and various customer-oriented documents. Please take the time to read these publications carefully. Following the instructions and recommendations in this manual will help assure safe and enjoyable operation of your vehicle.

The enclosed Warranty Information lists the services that FCA US LLC offers to its customers:

- The Warranty Certificate with terms and conditions for maintaining its validity
- The range of additional services available to FCA US LLC customers

NOTE: After reviewing the owner information, it should be stored in the vehicle for convenient referencing and remain with the vehicle when sold.

When it comes to service, remember that your authorized dealer knows your vehicle best, has factory-trained technicians and genuine MOPAR® parts, and cares about your satisfaction.

HOW TO USE THIS MANUAL

Essential Information

Consult the Table of Contents to determine which section contains the information you desire.

Since the specification of your vehicle depends on the items of equipment ordered, certain descriptions and illustrations may differ from your vehicle's equipment.

The detailed index at the back of this Owner's Manual contains a complete listing of all subjects.

Symbols

Some vehicle components have colored labels whose symbols indicate precautions to be observed when using this component. Refer to "Warning Lights and Messages" in "Getting To Know Your Instrument Panel" for further information on the symbols used in your vehicle.

WARNINGS AND CAUTIONS

This Owner's Manual contains **WARNINGS** against operating procedures that could result in a collision, bodily injury and/or death. It also contains **CAUTIONS** against procedures that could result in damage to your vehicle. If you do not read this entire Owner's Manual, you may miss important information. Observe all Warnings and Cautions.

VEHICLE MODIFICATIONS/ALTERATIONS

WARNING!

Any modifications or alterations to this vehicle could seriously affect its roadworthiness and safety and may lead to a collision resulting in serious injury or death.

GRAPHICAL TABLE OF CONTENTS

CONTENTS

- FRONT VIEW 8
- REAR VIEW 9
- INSTRUMENT PANEL 10
- INTERIOR 11

FRONT VIEW

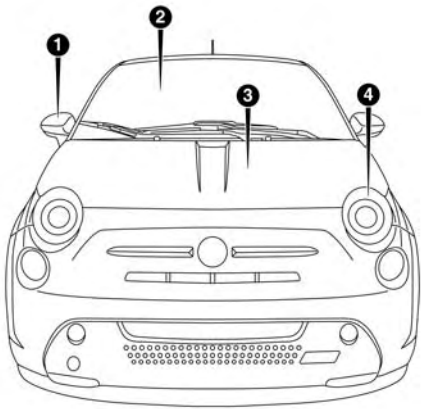

0201134917US

Front View

1 — Exterior Mirrors
2 — Windshield
3 — Underhood Compartment
4 — Headlights

REAR VIEW

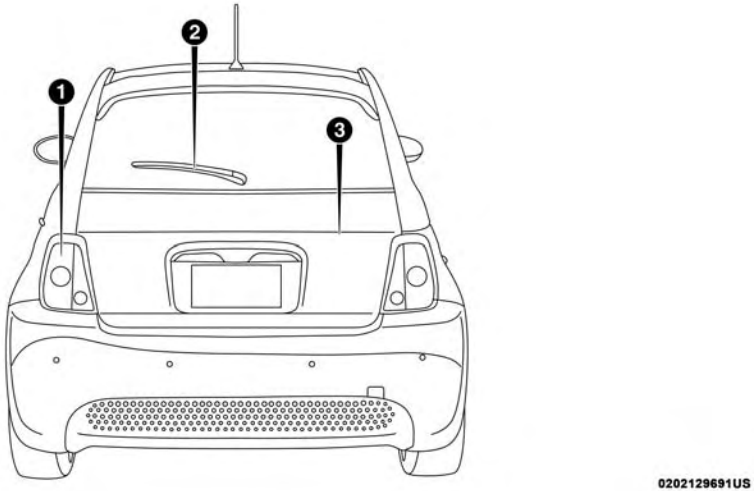

Rear View

1 — Rear Lights
2 — Rear Windshield Wiper
3 — Liftgate

INSTRUMENT PANEL

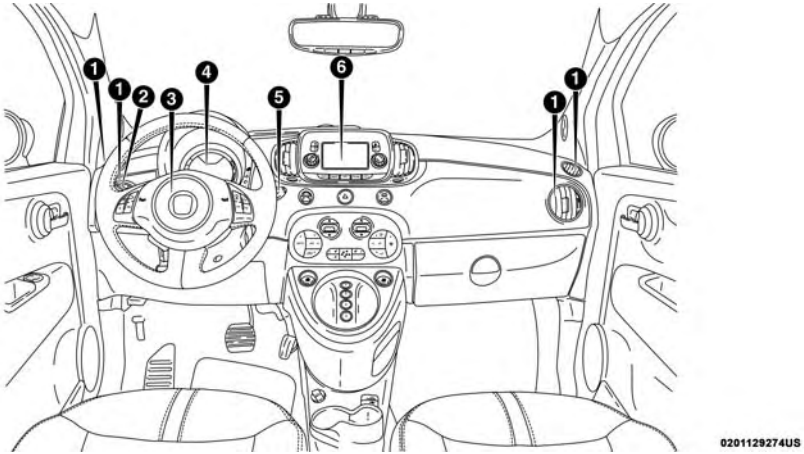

Instrument Panel

1 — Air Vents
2 — Multifunction Lever
3 — Steering Wheel
4 — Instrument Cluster
5 — Windshield Wiper Lever
6 — Radio

INTERIOR

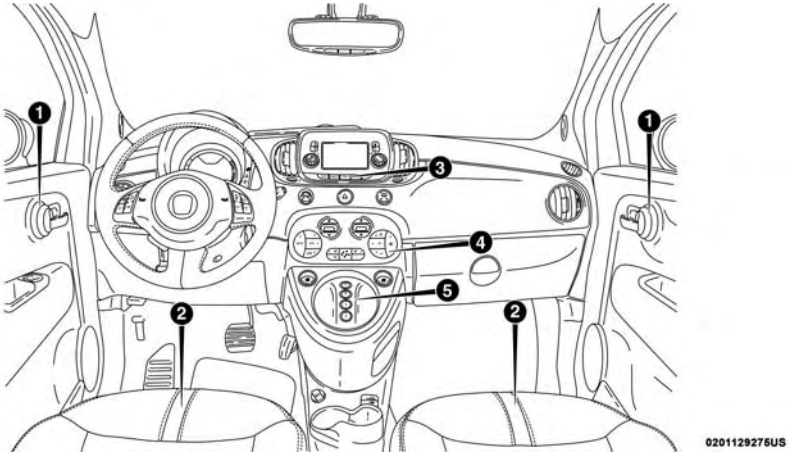

Interior

1 — Door Handles
2 — Seats
3 — Switch Panel
4 — Climate Controls
5 — Gear Selector

GETTING TO KNOW YOUR VEHICLE

CONTENTS

- HIGH VOLTAGE BATTERY 16
- 500e ELECTRIC VEHICLE FEATURES 18
  - Audible Pedestrian Warning System 18
  - Single-Speed Transmission 18
  - Auto Park 18
  - E-Park 18
  - Climate Control (HVAC System) 19
  - Electric Air Conditioning Compressor 19
  - Electric Power Steering. 19
  - Smartphone Features (Not Available In Canada) 20
- HIGH VOLTAGE CHARGING OPERATION 22
  - SAE J1772 Charging Inlet 22
  - AC Level 1 Charging (120V, 15 Amp) 22
  - AC Level 2 Charging (240V, 30 Amp) 35
  - Charge Times 36
- KEYS 36
  - Key With Remote Control. 36
- IGNITION SWITCH 39
  - Mechanical Ignition Switch. 39
  - Key-In-Ignition Reminder 41
- SENTRY KEY 41
  - Key Programming 42
  - Replacement Keys 42
  - General Information 42
- VEHICLE SECURITY ALARM 42
  - To Arm The System 42
  - To Disarm The System 43

- Central Lock/Unlock (Switch Safe Lock Device) — If Equipped 44

■ DOORS 45

- Manual Lock 45
- Power Door Locks 46

■ SEATS 47

- Manual Adjustment Front Seats. 47
- Heated Seats — If Equipped 50
- Manual Folding Rear Seat. 51

■ HEAD RESTRAINTS 52

- Reactive Head Restraints — Front Seats 52
- Rear Head Restraints 54

■ STEERING WHEEL 55

- Tilt Steering Column — If Equipped 55

■ MIRRORS 56

- Inside Day/Night Mirror 56
- Automatic Dimming Mirror — If Equipped 56
- Power Mirrors 57
- Folding Mirrors 57
- Spotter Mirror — If Equipped 58
- Heated Mirrors — If Equipped 58

■ EXTERIOR LIGHTS 58

- Multifunction Lever 58
- Headlights 58
- Daytime Running Lights 59
- High Beams 59
- Flash-To-Pass 59
- Parking Lights 59
- Follow Me Home/Headlight Delay 60
- Fog Lights — If Equipped 60
- Turn Signals 60
- Lane Change Assist 61

■ INTERIOR LIGHTS 61

- Interior Light Timing (Center Position) 62

- Interior Light Timing (On/Right Position) 62
- Dimmer Control 62
- Ambient Light. 62
- Cargo Area Lights 63

■ WIPERS AND WASHERS 63
- Front Windshield Wiper Operation 63
- Rear Windshield Wiper 64

■ CLIMATE CONTROLS 65
- Automatic Temperature Control Overview 66
- Automatic Temperature Control (ATC) 71
- Operating Tips 72

■ WINDOWS 74
- Power Window Controls 74
- Auto-Down. 75
- Wind Buffeting 75

■ POWER SUNROOF — IF EQUIPPED 75
- To Open 76
- To Close 76
- Wind Buffeting 76
- Sun Shade — If Equipped 76
- Pinch Protect Feature 77
- Emergency Operation. 77

■ HOOD 78
- Opening 78
- Closing. 79

■ INTERNAL EQUIPMENT 80
- Storage 80
- Cupholders 80
- Sun Visors. 81
- Electrical Power Outlets 82

■ LIFTGATE 84
- Opening 84

HIGH VOLTAGE BATTERY

Your vehicle is equipped with a Lithium-ion high voltage battery that is used to power the electric powertrain systems and the 12 volt vehicle electrical system.

The high voltage battery is located under the vehicle. The high voltage battery is maintenance free and designed to last for the life of the vehicle.

NOTE: Upon exiting the vehicle, ensure the ignition is in the off position and the key is removed from the vehicle.

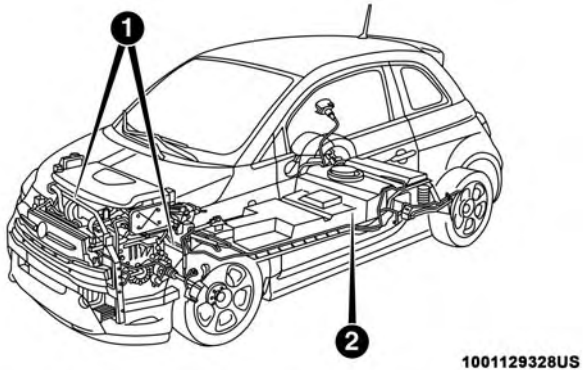

High Voltage Battery and Cable Locations

1 — High Voltage Cables
2 — High Voltage Battery

Lithium-ion batteries provide the following benefits:

- Lithium-ion batteries are much lighter than other types of rechargeable batteries of the same size.
- Lithium-ion batteries hold their charge; they only lose approximately 3 percent of their charge per month.
- Lithium-ion batteries have no memory, which means that you do not have to completely discharge them before recharging, as with some other batteries.

- Lithium-ion batteries can be recharged and discharged thousands of times.

High Voltage Battery Service Disconnect

The high voltage battery service disconnect is located under the rear passenger seat lower cushion. If your vehicle requires service, see an authorized dealer.

WARNING!

Never try to remove the high voltage battery service disconnect. The high voltage battery service disconnect is used when your vehicle requires service by a trained technician at an authorized dealer. Failure to follow this warning can cause severe burns or electrical shock that may result in serious injury or death.

Disposal of the High Voltage Battery

Your vehicle's high voltage battery is designed to last the life of your vehicle. See an authorized dealer for information on the disposal of the battery if it should require replacement.

General Information

The vehicle is also equipped with a Battery Management System that is designed to:

- Ensure safe operation
- Maximize driving range
- Maximize the life expectancy of the high voltage battery

NOTE:

- During vehicle start up and shut down, a clicking noise may be heard from within the vehicle. When the ignition key is turned to the on position, the high voltage battery contactors inside the battery are closed to make the stored electricity inside available for vehicle use. The clicking noise observed is the sound of these contactors as they open and close and is normal operation for your 500e.
- The operating temperature range of the high voltage battery is -22 °F to 122 °F (-30 °C to 50 °C). If it is attempted to operate the vehicle with the battery outside of these temperature extremes it will not function.

500e ELECTRIC VEHICLE FEATURES

Understanding the unique characteristics of your 500e will help ensure maximum performance and the best driving range from your vehicle.

Your 500e is equipped with two electrical systems; a 12 Volt system that is used to power the conventional electrical system and a high voltage system, which is used to drive the wheels through a single-speed transmission as well as other high voltage system components.

Your 500e operates differently then a traditional vehicle or Hybrid vehicle. Here are some of the main differences:

Audible Pedestrian Warning System

Your vehicle is equipped with an Audible Pedestrian Warning System. The Audible Pedestrian Warning System uses distinct sounds to alert pedestrians that your vehicle is approaching.

The audible warning system uses an in-car sound synthesizer with a speaker located in the underhood compartment. The warning system is automatically activated when selecting DRIVE or REVERSE.

In DRIVE range, the system will remain active until the vehicle reaches a speed of approximately 22 mph (35.5 km/h). At approximately 22 mph (35.5 km/h), the warning system is deactivated and will automatically be active when the vehicle returns to approximately 20 mph (32 km/h).

Single-Speed Transmission

Instead of a traditional transmission, your vehicle is equipped with a single-speed transmission to transfer the torque from the E-Drive motor to the drive wheels. This transmission requires no maintenance and is designed to operate for the life of the vehicle.

Auto Park

Auto Park will automatically place the transmission into PARK if there is an indication that the driver may leave the vehicle while still in the DRIVE, NEUTRAL or REVERSE gear. Refer to “Single-Speed Transmission” in “Starting And Operating” in your Owner’s Manual for further information.

E-Park

The parking pawl is traditionally located inside an automatic transmission and activated when the vehicle is placed in the PARK position.

E-Park is activated when the driver pushes the PARK button. An electric motor activates the parking pawl and locks the single-speed transmission when the vehicle is placed into PARK. This will prevent any unwanted movement of the vehicle.

NOTE: The engagement of the E-Park can be heard when there is no noise in the interior of the vehicle, this is a normal condition.

Climate Control (HVAC System)

Your 500e is equipped with an Automatic Temperature Control (ATC) HVAC system. This HVAC system utilizes a humidity sensor, cabin sensor, and ambient temperature sensor to choose operation mode and control cabin comfort. These components allow the controller to operate the HVAC system in a very efficient manner to maximize driving range.

Your 500e also uses an electric air heater to provide heat to the cabin.

Electric Air Conditioning Compressor

Your 500e uses an electric air conditioning compressor. The air conditioning compressor is powered by the high voltage battery system and is used to cool the vehicle occupants and the high voltage battery while the vehicle is being driven or when it is being charged.

The high voltage battery may require cooling to keep the vehicle running. The air conditioning compressor activates without any input from the occupant.

NOTE: The AC system helps cool the high voltage battery. If the air conditioning system should require service, see an authorized dealer as soon as possible.

Electric Power Steering

Your vehicle is equipped with an Electric Power Steering (EPS) system. The power steering system requires no maintenance and operates without the use of power steering fluid.

Smartphone Features (Not Available In Canada)

With the Uconnect app, you can monitor the state of charge of the high voltage battery or initiate charging from your phone. You can also turn on your vehicle's climate control system remotely. The app provides the following features:

- Monitor battery charge level
- Display available driving distance
- Check charging status
- Remotely activate vehicle climate control system
- Unlock and lock doors
- Assist with locating your vehicle
- Locate charging stations
- Send a point-of-interest to your vehicle's navigation system
- Schedule a charge
- View energy consumed
- Notifications for charging and preconditioning events

How do I use the smartphone app?

From a mobile device or computer, visit

www.FIATaccess.com

Registration Website

Once in the registration website, you will need to enter your vehicle's VIN and Connectivity ID. The connectivity ID is found in the vehicle's instrument cluster. To locate the connectivity ID follow the steps below:

1. Push the menu button on the instrument cluster.
2. Choose "Settings" and scroll down to the "Connectivity ID."

3. Select “Connectivity ID.”

After obtaining the connectivity ID and VIN number return to the vehicle registration website and perform the following:

1. After entering the VIN (Vehicle Identification Number), Connectivity ID and your email address, click “submit.”
2. You will now be asked to fill in your contact information and a user name and password.
3. Once finished with registration you will be directed to your 500e owner’s site.
4. From your smartphone, search for and download the Uconnect App from the App Store (Apple iPhone) or Google Play (Android mobile device).
5. To log in, use the username and password you used during registration.

NOTE: You must register with Uconnect Access to use the services. Uconnect Access services are operable only for 36–months beginning on the date of the retail sale of the 500e. At the end of the 36–month operability period, the services will be deactivated and will become inoperable, and the services will be unavailable. The 36–month operability period cannot be extended, renewed or restarted under any circumstances. Services can only be used where 3G cellular coverage is available, visit DriveUconnect.com to view the coverage map.

Need help with registration?

Please call the Uconnect Call Center Toll Free number below:1-855-261-5364

HIGH VOLTAGE CHARGING OPERATION

SAE J1772 Charging Inlet

Your vehicle uses an industry standard SAE J1772 charge inlet (vehicle charge inlet) for both AC Level 1 (120V) and AC Level 2 (240V) charging.

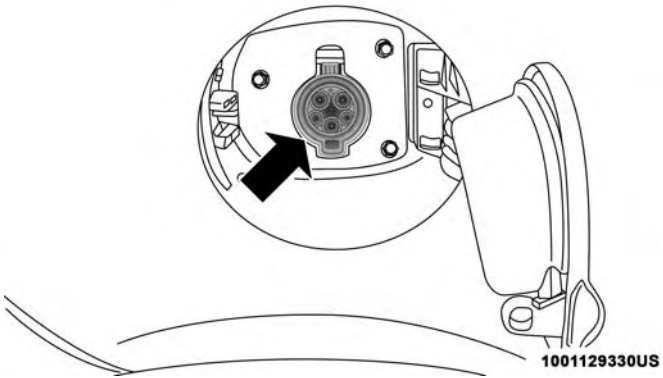

SAE J1772 Charge Receptacle

NOTE: The charge inlet door locks and unlocks with the vehicle doors.

AC Level 1 Charging (120V, 15 Amp)

Your vehicle is equipped with a 120 Volt AC, SAE J1772 Level 1 Electric Vehicle Supply Equipment (EVSE), also referred to as a charging cordset. AC Level 1 charging requires a conventional NEMA 5-15 120 Volt AC grounded wall receptacle along with the charging cordset provided with the vehicle.

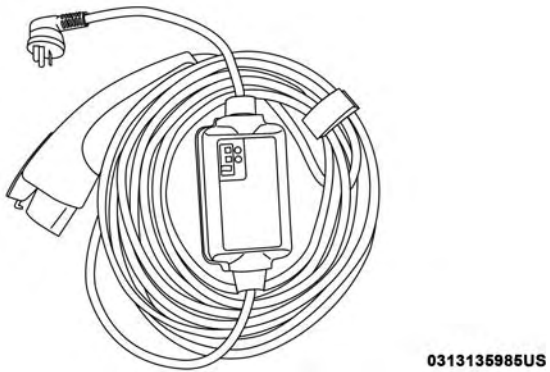

Charging Cord Set

WARNING!

Shock, fire, property damage, or personal injury may occur if the Portable EVSE Cordset is not used properly. There are no serviceable parts contained in the Portable EVSE Cordset. Any attempt to service it may result in shock, fire, property damage, or personal injury.

To access the charging cordset, remove the Level 1 EVSE from its storage bin by lifting the rear cargo cover.

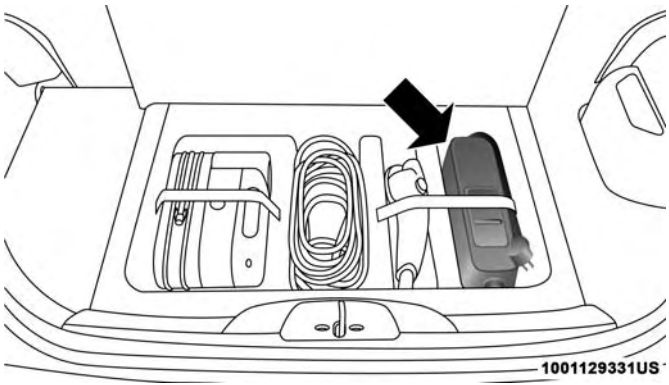

EVSE Rear Cargo Location

NOTE: The charging cordset is used for AC Level 1 charging only.

EVSE Charging Cordset

The EVSE charging cordset is compliant with SAE J1772, and applicable for use with vehicles fitted with the standard SAE J1772 charge inlets. The EVSE includes:

- An AC Power Cord with NEMA 5–15p, Right Angle plug
- An indoor/outdoor charge cable, EV- rated
- A Charge Connector
- A NEMA 6 rated enclosure with a Charge Current Interrupt Device (CCID) with status indicator display

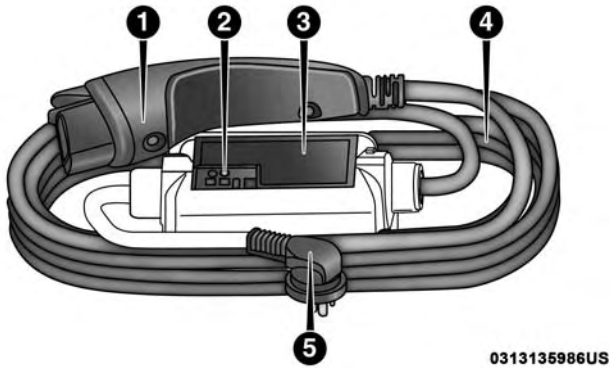

Charging Cord Set

1 — Charge Connector
2 — Status Indicator Display
3 — Charging Cord Set Enclosure
4 — Charge Cable
5 — AC Plug

Charging Cordset Operation

1. Plug the AC plug of the charging cordset into a 15A, or 20A, 120VAC, 60Hz, grounded wall receptacle. Do not use an extension cord, outlet/plug adapter, or a worn outlet. The charging cordset will not operate safely unless it is plugged directly into the wall receptacle.

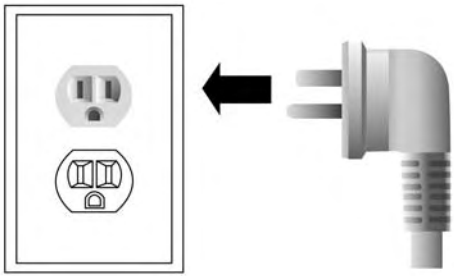

0231097863US

AC Plug And Wall Receptacle

WARNING!

Improper connection of the equipment-grounding conductor could result in a risk of electric shock. Check with a qualified electrician or serviceman if you are in doubt as to whether the wall receptacle is properly grounded. Do not modify the plug provided with the product – if it does not fit the outlet, you must have a proper outlet installed by a qualified electrician.

2. Check to see if the charging cordset is ready to charge by reviewing the indicator lights. After a brief self-check, where the indicator light will flash, a green AC indicator light and two green charge rate indicator lights indicate that the cordset is ready for use.

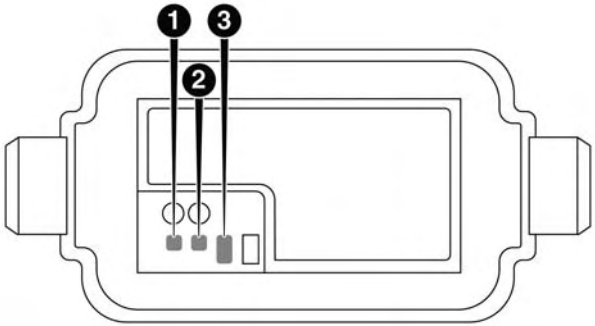

0231097864US

Cordset Indicator Lights

1 — AC Power Indicator Light	3 — Charge Rate Indicator Lights
2 — Fault Indicator Light	

3. If the charging cordset is ready to charge, ensure the vehicle is in PARK, and then connect the charge connector to the vehicle's charge inlet. You will hear a "click" when the charge connector is inserted correctly and coupled with the vehicle's charge inlet.

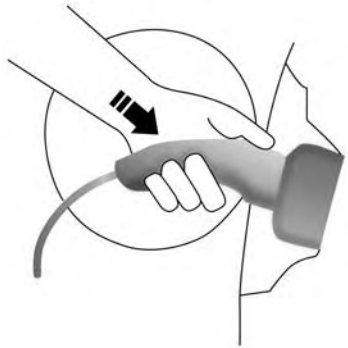

0231097866US

Inserting The Charge Connector Into The Vehicle Charge Inlet

4. When the vehicle commences charging, the Charge Rate Indicator Lights will cycle from left to right, and then both turn off. This pattern will repeat while the vehicle is charging. The lights are illuminated at the rate of approximately one cycle per second.

NOTE: The vehicle should start charging automatically. If not, please check the following:

- Charging Cordset - The charging cordset status indicators illuminate green or red to identify the charging cordset status. Refer to "Troubleshooting Using The Status Indicator Display" in this section for further information on the charging cordset status.
- Wall Receptacle – Check whether the wall receptacle is functional (no power outage) and/or plug the charging cordset into a different wall receptacle.
- Charging Schedule – Check whether or not the charging schedules have been enabled. If enabled, check that you are within the scheduled time and date. If a charging schedule has been enabled and you are outside the time and date, you may override the schedule for this charging event by plugging in the charge connector, unplugging it, and then plugging it back into the vehicle charge inlet. Complete the double plug sequence within ten seconds for it to override the set schedule.

5. To stop the charging process, disconnect the vehicle side connector first and then the charging cordset from the wall receptacle. To disengage the vehicle coupler, push the button on the charge connector (1) before removing the connector from the vehicle charge inlet (2).

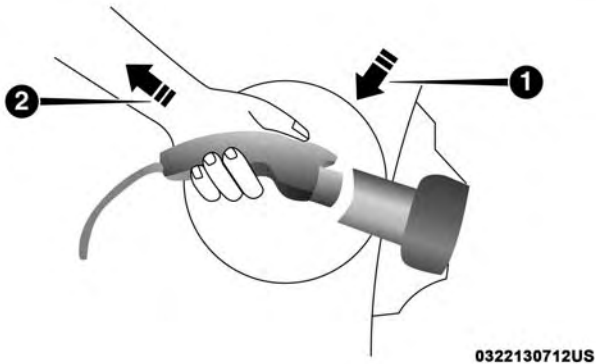

Removing The Charge Connector From The Vehicle Charge Inlet

6. Close the inlet door.

NOTE: It is good practice to keep the ignition in the OFF position while conducting Level 1 Charging. This minimizes any additional vehicle loads the EVSE has to support which extend the charging time.

Troubleshooting Using The Status Indicator Display

If the vehicle is not charging properly, consult the status indicator lights.

The **AC Power Indicator** displays the status and safety of the input power. If this indicator is green, the power is within acceptable limits to charge the vehicle. If only the AC Power Indicator is flashing red, then there is a problem with the AC power at the electrical outlet. If the AC Power Indicator does not return to green, then the outlet should be inspected by a licensed electrician to ensure the voltage, frequency, and grounding are complaint to national and local electrical codes and ordinances. It may be possible to attempt charging from a different outlet.

The **Fault Indicator** displays the status of the Portable EVSE Cordset and the vehicle connection. The Portable EVSE Cordset will not allow charging while the fault indicator is red. If it is off, the Portable EVSE Cordset has not detected any internal faults, or faults with the vehicle connection. If the Fault Indicator is flashing red, there is a fault detected either with the Portable EVSE Cordset, electronics, or with the vehicle connection. The Portable EVSE Cordset may attempt to retry to provide current to the vehicle if the fault is cleared. If the Fault Indicator does not attempt to provide charge to the vehicle, the charge connector will need to be removed from the vehicle to clear the fault.

The fault code list in the table below provides a reference for the important faults that are detected by the Portable EVSE Cordset. When a fault is detected, the AC Power Indicator, the Fault Indicator, or both the AC Power and Fault Indicators will flash red. If only the AC Power Indicator is red, there is a problem on the AC Power side of the unit. If only the Fault Indicator is flashing red, there is a problem internal to the unit or with the vehicle. If both the AC Power and Fault Indicators are flashing red, an over temperature condition is detected at either the AC plug or within the enclosure. Additional information about the faults is provided by a fault code that is displayed on the two green Charge Rate Indicators. The fault code consists of four digits, each with a value of 1 or 2. The value of a digit is the number of indicators illuminated for that part of the sequence. For example, fault code (1, 2, 1, 1) will display the following sequence: One indicator will illuminate for (0.3 seconds), then two indicators will illuminate, then one indicator, and finally one indicator will illuminate. After all four fault code digits have been displayed, the indicators will remain off for one second before repeating the sequence.

Portable EVSE Cordset Fault Code List			
Flashing Fault Code	**Flashing Indicator**	**Fault Indication**	**Recommended Actions**
1, 2, 2, 2	AC Power	Vehicle Current Draw is Too High	Check Portable EVSE Cordset and Vehicle at a service location.
1, 1, 2, 1	AC Power	Incorrect Electrical Supply	Attempt to charge the vehicle at a different outlet. Contact a certified electrician to check the electrical outlet and AC Supply (house wiring).
1, 1, 2, 2	AC Power	Incorrect Electrical Supply	Attempt to charge the vehicle at a different outlet. Contact a certified electrician to check the electrical outlet and AC Supply (house wiring).
1, 2, 1, 1	AC Power	Incorrect Electrical Supply	Attempt to charge the vehicle at a different outlet. Contact a certified electrician to check the electrical outlet and AC Supply (house wiring).
1, 2, 1, 2	AC Power	Incorrect Electrical Supply	Attempt to charge the vehicle at a different outlet. Contact a certified electrician to check the electrical outlet and AC Supply (house wiring).
1, 2, 2, 1	AC Power	Outlet Wiring Bad Ground	Attempt to charge the vehicle at a different outlet. Contact a certified electrician to check the electrical outlet and AC Supply (house wiring).

Portable EVSE Cordset Fault Code List			
Flashing Fault Code	**Flashing Indicator**	**Fault Indication**	**Recommended Actions**
1, 1, 1, 1	Fault	Portable EVSE Cordset Internal Fault	Unplug the Portable EVSE Cordset from the vehicle charge inlet and retry to charge. If the issue is not corrected, check the Portable EVSE Cordset and Vehicle at a service location.
1, 1, 1, 2	Fault	Portable EVSE Cordset Internal Fault	Unplug the Portable EVSE Cordset from the vehicle charge inlet and retry to charge. If the issue is not corrected, check the Portable EVSE Cordset and Vehicle at a service location.
1, 2, 1, 1	Fault	Portable EVSE Cordset Internal Fault	Check Portable EVSE Cordset and Vehicle at a service location.
1, 2, 1, 2	Fault	CCID Leakage Current Detected	Disconnect charge connector and retry charging. If problem persists, check the Portable EVSE Cordset and Vehicle at a service location.
2, 2, 2, 1	Fault	Vehicle Interface Connector	Error with the Vehicle Charge Connector Interface — Check for water or other contamination in the vehicle charge inlet or charge connector.
2, 2, 2, 2	Fault	Vehicle Interface Connector	Error with the Vehicle Charge Connector Interface — Check for water or other contamination in the vehicle charge inlet or charge connector.

Portable EVSE Cordset Fault Code List			
Flashing Fault Code	**Flashing Indicator**	**Fault Indication**	**Recommended Actions**
1, 1, 2, 1	Fault & AC Power	EVSE Enclosure Internal Temperature is Too High	Use caution as the Portable EVSE Cordset housing may be hot. It is recommended to move the Portable EVSE Cordset out of direct sun exposure. Allow the unit to cool. If error persists, check the Portable EVSE Cordset at a service location.
1, 1, 1, 2	Fault & AC Power	Hot AC Power Plug Warning	Use caution as the Portable EVSE Cordset AC Power Plug may be hot. It is recommended to carefully unplug the unit from the wall outlet and allow it to cool down. Attempt to charge the vehicle at a different wall outlet. Contact a certified electrician to inspect/replace the wall outlet that was associated with the Hot AC Plug event. Charging will still occur, but at a reduced rate.
1, 1, 1, 1	Fault & AC Power	AC Power Plug Over Temperature	Use caution as the Portable EVSE Cordset AC Power Plug may be hot. It is recommended to carefully unplug the unit from the wall outlet and allow it to cool down. Attempt to charge the vehicle at a different outlet. Contact a certified electrician to inspect/replace the outlet that was associated with the Hot AC Plug event.

FCC Notice:

This unit has systems that operate on a radio frequency that comply with Part 15 of the Federal Communications Commission (FCC) rules.

Operation is subject to the following two conditions:

1. The device may not cause interference.
2. The device must accept any interference received, including interference that may cause undesired operation of the device.

Changes or modifications to any of these systems by other than an authorized service facility could void authorization to use this equipment.

This unit complies with ICES-003E of Industry Canada, and EMC Directive 2004/108/EC.

Guidelines for preventing fire and electric shock:

- Ensure the charging cable is positioned so it will not be stepped on, tripped over, or otherwise subjected to damage or stress.
- There are no user serviceable parts inside.
- Do not use the charging cordset if it is visibly damaged. Contact an authorized dealer for service.
- Do not place fingers, or any other objects inside the charge connector.
- Do not allow children to operate this device. Adult supervision is mandatory when children are in proximity when the charging cordset is in use.

NOTE: During normal operation, the charge connector or AC plug may feel warm. If either one feels hot during charging, unplug the charging cordset and have a qualified electrician inspect the wall receptacle before you continue charging.

WARNING!

Do not use the charging cordset with a receptacle that is worn or damaged. Using the charging cordset with a worn or damaged receptacle may cause burns or start a fire.

Vehicle Charge Indicators

Instrument Cluster High Voltage Battery Gauge

There is a battery gauge indicator located on the instrument cluster. The battery gauge displays, with progressive

color indication, the current state of charge for the high voltage battery; with the percentage value located at the bottom of the gauge.

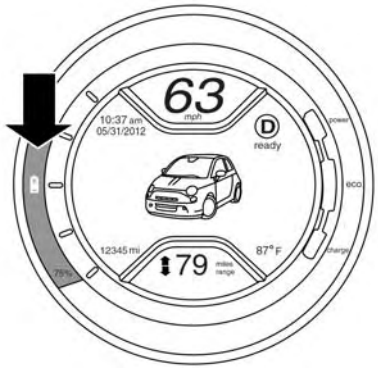

High Voltage Battery Gauge

Charge Low And Limited Power Messages

The state of charge is monitored during normal operation. If the state of charge reaches certain thresholds the following messages display on the cluster:

- charge low — displayed at 17% (warning displayed for six seconds).
- charge low — displayed at 11% (Displayed for six seconds).

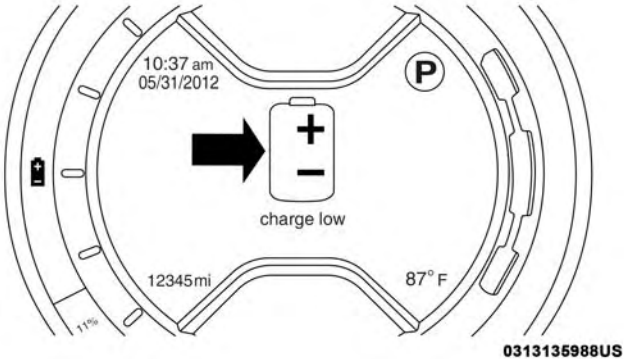

Charge Low Message

- charge low limited power mode — turtle displayed at 5% and remains on.
- charge low limited power mode — turtle flashes at 0% until condition changes.

NOTE: The limited power mode can also be activated if the high voltage battery temperature is too high or too low.

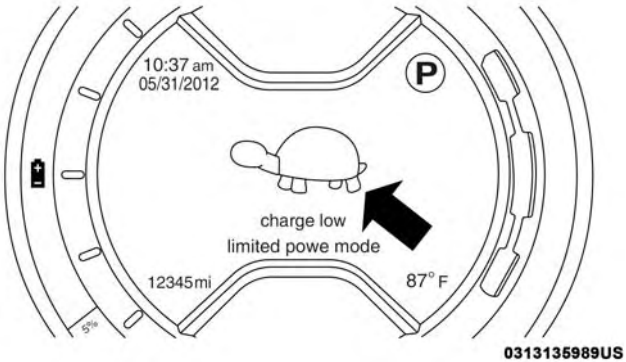

Charge Low Limited Power Mode

NOTE: At 0% state of charge or below the following features will be disabled if in use:

- Heated Seats
- Electronic Speed Control
- Climate Controls

Instrument Panel State Of Charge Indicator

In addition to the battery gauge your vehicle is equipped with a visual state of charge indicator. The state of charge indicator is made up of five lights that are mounted to the center of the instrument panel.

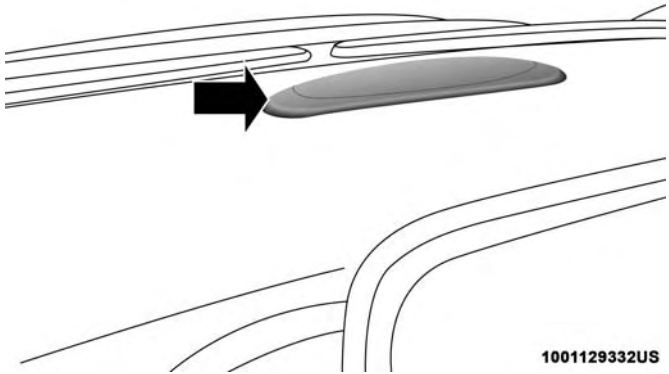

State Of Charge Indicator

The state of charge indicator represents the current state of charge for the high voltage battery. The state of charge indicator lights quickly to identify the battery state of charge while the vehicle is being charged. Each light represents the battery's current percentage of charge.

NOTE: In the event of an error in the charging process the outer two lights will blink.

Number Of Indicator Lights Illuminated	Percent Of Battery Charge
1 Light	0 – 20%
2 Lights	21 – 40%
3 Lights	41 – 60%
4 Lights	61 – 80%
5 Lights	81 – 100%

AC Level 2 Charging (240V, 30 Amp)

AC Level 2 (240V) charging requires a 240V, Level 2 EVSE (Charging station). A 30A Level 2 EVSE for home installation is recommended.

When using public charging stations, ensure the charging station is ready to provide charge and the vehicle is in PARK before the charge connector is plugged into the vehicle's charge inlet. You will hear a "click" when the charge connector is inserted correctly and is coupled with the vehicle's charge inlet. The vehicle should start charging automatically. If not, please check the instructions at the charging station.

NOTE: The vehicle should start charging automatically. If not, please check the following:

- Charging Station – Check the indications and instructions at the charging station.
- Charging Schedule – Check whether the charging schedule is enabled and if so, whether the vehicle is currently within the scheduled charge time/date. If the charging schedule is enabled, you may override them for this charging event by plugging in the charge connector, unplugging it, and then plugging it back into the vehicle charge inlet. Complete the double plug sequence within ten seconds for it to override the set schedule.

To stop the charging process, disconnect the charge connector from the vehicle inlet.

NOTE: Older or non-compliant J1772 EVSE models may not support charging of your EV. If your vehicle doesn't charge, it may be connected to a non-compliant Level 2 EVSE and flashes the indicators. Please identify this failure to the site operator or EVSE provider.

Charge Times

The following factors determine the time it takes to charge the high voltage battery:

- The high voltage battery's current state of charge
- What level EVSE is being used (Level 1 – 120V or Level 2 – 240V)
- Ambient temperature
- Whether the vehicle is (keyed) on during charging

NOTE:

- The charging times are estimates based on a completely discharged high voltage battery.
- Charging times will vary based on the age, condition, state of charge and temperature of the high voltage battery.
- Charging times may be longer if a thermal self-protection reduces the charging current from the EVSE.

Type of Charge	Estimated Charge Time
Level 1 (120V/15A)	Approximately 23 hours
Level 2 (240V/30A)	Approximately 4 hours

KEYS

Key With Remote Control

The Remote Keyless Entry (RKE) key fob contains an integrated key. To use the mechanical key, simply push the mechanical key release button.

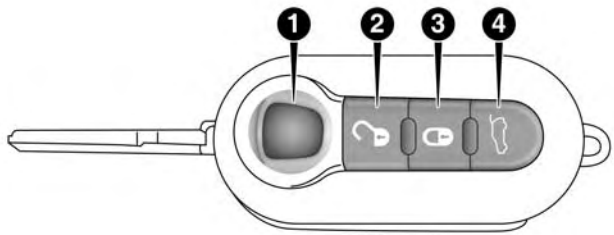

0307129319US

Mechanical Key Release Button

1 — Mechanical Key Release Button
2 — Unlock Button
3 — Lock Button
4 — Liftgate Button

NOTE:

- The authorized dealer that sold you your vehicle has the key code numbers for your vehicle locks. These numbers can be used to order duplicate keys from your authorized dealer.
- When exiting the vehicle, remember to cycle the ignition to the STOP (OFF/LOCK) position and remove the key from the ignition switch to avoid draining the battery.

To Unlock The Doors And Liftgate

Push and release the unlock button on the key fob once to unlock the driver's door or twice, within five seconds, to unlock all doors, and the liftgate. The turn signal lights will flash to acknowledge the unlock signal. The illuminated entry system will also turn on.

To Lock The Doors And Liftgate

Push and release the lock button on the key fob to lock all doors and the liftgate. The turn signal lights will flash and the horn will chirp to acknowledge the signal.

Locking Doors With A Key

1. Insert the key with either side up.
2. Turn the key to the right to lock the door.
3. Turn the key to the left to unlock the door.

Replacing The Battery In The Key With Remote Control

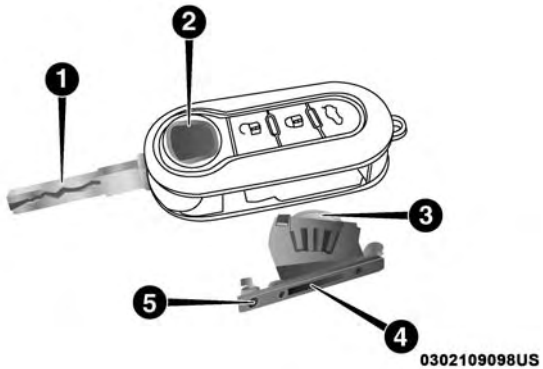

Key Fob Components

1 — Mechanical Key
2 — Mechanical Key Release Button
3 — Battery
4 — Battery Case
5 — Screw

To replace the battery, proceed as follows:

1. Push mechanical release button to open the mechanical key.
2. Turn the screw to unlock using a small screwdriver.
3. Take out the battery case and replace the battery making sure that polarities are correct.
4. Refit the battery case inside the key and lock it turning the screw to lock.

NOTE: Used batteries should be properly disposed of as specified by law, see an authorized dealer for assistance needed.

Programming Additional Key Fobs

Refer to “Sentry Key” in “Getting To Know Your Vehicle” for further information.

If you do not have a programmed key fob, contact an authorized dealer for details.

Request For Additional Remote Controls

The system can recognize up to eight remote controls. Should a new remote control be necessary, go to an authorized dealer, taking an ID document and the car ownership documents.

General Information

The following regulatory statement applies to all radio frequency (RF) devices equipped in this vehicle:

This device complies with Part 15 of the FCC Rules and with Industry Canada license-exempt RSS standard(s). Operation is subject to the following two conditions:

1. This device may not cause harmful interference, and
2. This device must accept any interference received, including interference that may cause undesired operation.

NOTE: Changes or modifications not expressly approved by the party responsible for compliance could void the user's authority to operate the equipment.

IGNITION SWITCH

Mechanical Ignition Switch

The ignition switch can be turned to three different positions:

- STOP: the vehicle is off, and the key can be removed. Some electrical devices (e.g. sound system, central door locking system, etc.) can operate.

NOTE: The transmission must be placed in PARK before the key is turned to the STOP position. Then, the key can be removed.

- AVV: vehicle start-up.
- MAR: driving position. All electrical devices are enabled.

If the key is turned to the STOP position before shifting into park, the key will have to be moved to the driving (MAR) position and back to STOP. Then, the key can be removed.

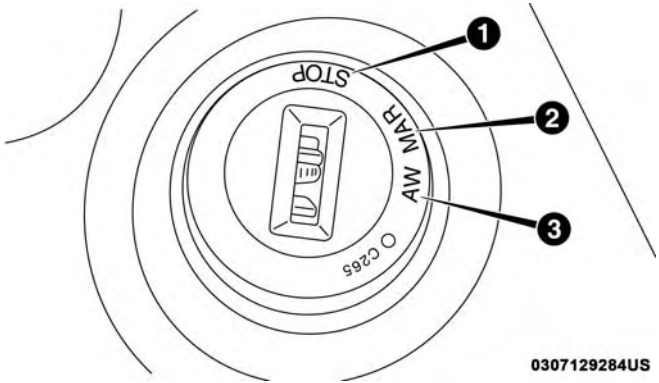

Ignition Switch

1 — STOP (OFF/LOCK)
2 — MAR (ACC/ON/RUN)
3 — AVV (START)

WARNING!

- **Before exiting a vehicle, always apply the parking brake, place the transmission into PARK, and remove the key fob from the ignition. When leaving the vehicle, always lock your vehicle.**
- **Never leave children alone in a vehicle, or with access to an unlocked vehicle.**
- **Allowing children to be in a vehicle unattended is dangerous for a number of reasons. A child or others could be seriously or fatally injured. Children should be warned not to touch the parking brake, brake pedal or the transmission gear selector buttons.**
- **Do not leave the key fob in or near the vehicle, or in a location accessible to children. A child could operate power windows, other controls, or move the vehicle.**
- **Do not leave children or animals inside parked vehicles in hot weather. Interior heat build-up may cause serious injury or death.**

CAUTION!

An unlocked vehicle is an invitation. Always remove the key from the ignition and lock all doors when leaving the vehicle unattended.

Key-In-Ignition Reminder

Opening the driver's door when the key is in the ignition and the ignition switch position is in the OFF/LOCK position, a signal sounds to remove the key.

SENTRY KEY

The Sentry Key Immobilizer System prevents unauthorized vehicle operation by disabling the vehicle. The system does not need to be armed or activated. Operation is automatic, regardless of whether the vehicle is locked or unlocked.

The system uses ignition keys which have an embedded electronic chip (transponder) to prevent unauthorized vehicle operation. Therefore, only keys that are programmed to the vehicle can be used to start and operate the vehicle.

NOTE: A key which has not been programmed is also considered an invalid key, even if it is cut to fit the ignition switch lock cylinder for that vehicle.

If the vehicle security light is on after the key is turned to the MAR (ACC/ON/RUN) position, it indicates that there is a problem with the electronics.

CAUTION!

- **Always remove the Sentry Key from the vehicle and lock all doors when leaving the vehicle unattended.**
- **The Sentry Key Immobilizer system is not compatible with some aftermarket remote starting systems. Use of these systems may result in vehicle starting problems and loss of security protection.**

All of the keys provided with your new vehicle have been programmed to the vehicle electronics.

Key Programming

Programming key fobs may be performed at an authorized dealer.

Replacement Keys

NOTE: Only keys that have been programmed to the vehicle electronics can be used to start the vehicle. Once a Sentry Key has been programmed to a vehicle, it cannot be programmed to any other vehicle. **When having the Sentry Key Immobilizer System serviced, bring all vehicle keys with you to an authorized dealer.**

General Information

The following regulatory statement applies to all radio frequency (RF) devices equipped in this vehicle:

This device complies with Part 15 of the FCC Rules and with Industry Canada license-exempt RSS standard(s). Operation is subject to the following two conditions:

1. This device may not cause harmful interference, and
2. This device must accept any interference received, including interference that may cause undesired operation.

NOTE: Changes or modifications not expressly approved by the party responsible for compliance could void the user's authority to operate the equipment.

VEHICLE SECURITY ALARM

The vehicle security alarm monitors the vehicle doors for unauthorized entry and the ignition switch for unauthorized operation. While the vehicle security alarm is armed, interior switches for door locks and liftgate release are disabled. If something triggers the alarm, the vehicle security alarm will provide the following audible and visible signals: the horn will pulse, the park lamps and/or turn signals will flash, and the vehicle security light on the instrument panel will flash.

To Arm The System

1. Remove the key from the ignition switch and get out of the vehicle.
2. Lock the door using either the Central Lock/Unlock switch or the Remote Keyless Entry key fob and close all doors.

3. The horn will sound and the vehicle security light in the instrument cluster will switch on for approximately three seconds. This shows that the vehicle security alarm is about to arm. During this period, if a door is opened, the ignition switch is turned to ON/RUN, or the power door locks are unlocked in any manner, the vehicle security alarm will automatically disarm. After approximately three seconds, the vehicle security light will flash. This shows that the vehicle security alarm is fully armed.

The activation of the vehicle security alarm is followed by a self-diagnosis stage. If a fault is detected during the self-diagnosis stage, the horn will sound a second time.

If the horn sounds a second time, check that all doors, hood and liftgate are closed correctly, then rearm the system.

If the vehicle security alarm sounds the horn a second time even when all doors, hood and liftgate are correctly closed, a fault has occurred in the operation of the system. Contact an authorized dealer.

To Disarm The System

Push unlock on the key fob, or insert the key into the ignition switch and turn the ignition switch to the ON/RUN position.

NOTE: The vehicle security alarm will not disarm when the metal insert of the key is used on a single door lock cylinder.

The vehicle security alarm is designed to protect your vehicle; however, you can create conditions where the vehicle security alarm will arm unexpectedly. If you remain in the vehicle and lock the doors with the key fob, once the vehicle security alarm is armed, when you pull the door handle to exit, the alarm will sound. If this occurs, push the unlock button on the key fob to disarm the vehicle security alarm.

Central Lock/Unlock (Switch Safe Lock Device) — If Equipped

This safety device prevents the operation of the interior door handles and the door locking/unlocking button.

It prevents the opening of the doors from inside the passenger compartment, serving as an obstacle to break-in attempts (e.g. broken window).

We recommend that you activate the Safe Lock device each time you park your car.

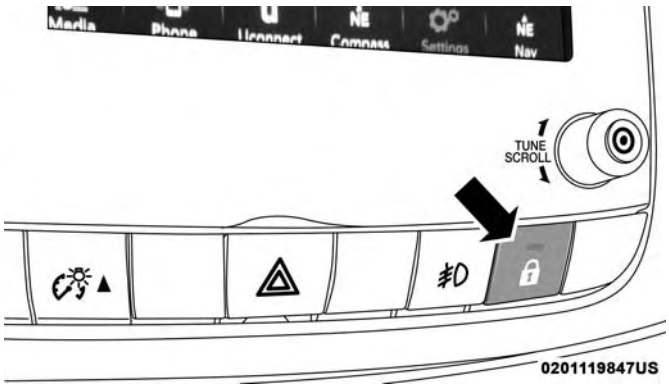

Safe Lock Device Location

Activating The Safe Lock Device

The Safe Lock device is enabled on all the doors by quickly double-pushing the lock button on the key fob.

The direction indicators flash three times and the LED above the button flashes to indicate that the Safe Lock device has been activated. If one or more of the doors are not closed correctly, the Safe Lock device will not activate, preventing a person from getting stuck inside the passenger compartment by entering the car through, and then closing, the open door.

Deactivating The Safe Lock Device

The Safe Lock device deactivates automatically:

1. By pushing the unlock button on the key fob.
2. By turning the ignition key to the MAR position.

DOORS

Manual Lock

To lock each door from the inside, push the inside door handle toward the door until the red lock indicator is visible. To unlock the doors from the inside, pull the inside door handle to the first detent or until the lock symbol is no longer visible.

If the lock symbol is visible when the door is shut, the door will lock. Therefore, make sure the key fob is not inside the vehicle before closing the door.

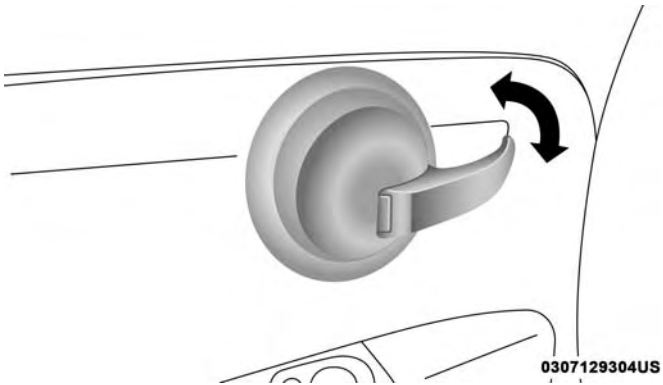

Manual Lock/Unlock Switch

NOTE: The manual lock knob unlocks each individual door separately.

WARNING!

- **When exiting the vehicle, always remove the key fob from the vehicle and lock your vehicle.**
- **Never leave children alone in a vehicle, or with access to an unlocked vehicle.**
- **Allowing children to be in a vehicle unattended is dangerous for a number of reasons. A child or others could be seriously or fatally injured. Children should be warned not to touch the parking brake, brake pedal or the gear selector.**
- **Do not leave the key fob in or near the vehicle, or in a location accessible to children, and do not leave the ignition of a vehicle equipped with Keyless Enter-N-Go in the ON/RUN mode. A child could operate power windows, other controls, or move the vehicle.**
- **Do not leave children or animals inside parked vehicles in hot weather. Interior heat build-up may cause serious injury or death.**

CAUTION!

An unlocked car is an invitation. Always remove the key from the ignition and lock all doors when leaving the vehicle unattended.

Power Door Locks

A power door lock switch is incorporated into the driver door handle. Push or pull the handle to lock or unlock the doors and liftgate. If the driver's door handle is pushed, a red lock indicator will show on the driver's door handle (indicating locked). When the door is closed, the door will lock.

NOTE: To prevent the key from being locked in the vehicle, the doors will automatically unlock if the driver's door handle is pushed when the key is in the ignition.

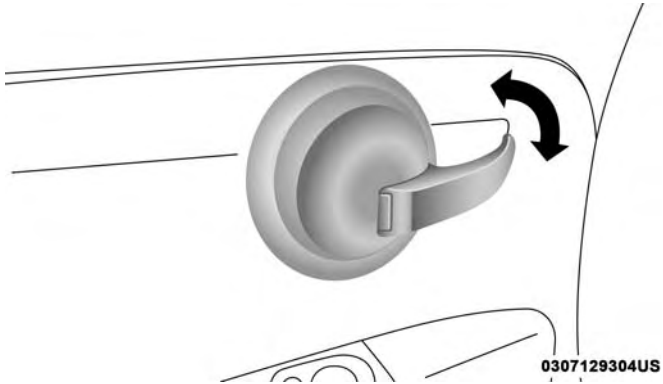

Power Door Lock Handle

Auto Door Locks

When enabled, the door locks will lock automatically when the vehicle's speed exceeds 12 mph (20 km/h).

NOTE: Use the Automatic Door Locks feature in accordance with local laws.

Refer to "Uconnect Settings" in "Multimedia" for further information.

SEATS

Seats are a part of the Occupant Restraint System of the vehicle.

WARNING!

- **It is dangerous to ride in a cargo area, inside or outside of a vehicle. In a collision, people riding in these areas are more likely to be seriously injured or killed.**
- **Do not allow people to ride in any area of your vehicle that is not equipped with seats and seat belts. In a collision, people riding in these areas are more likely to be seriously injured or killed.**
- **Be sure everyone in your vehicle is in a seat and using a seat belt properly.**

Manual Adjustment Front Seats

Forward/Rearward Adjustment

The adjusting bar is located at the front of the seats, near the floor.

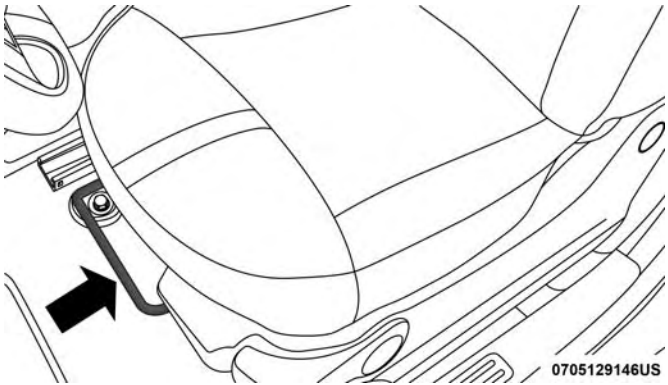

Adjusting Bar

While sitting in the seat, lift up on the bar and move the seat forward or rearward. Release the bar once the desired position is reached. Then, using body pressure, move forward and rearward on the seat to be sure that the seat adjusters have latched.

WARNING!

- **Adjusting a seat while driving may be dangerous. Moving a seat while driving could result in loss of control which could cause a collision and serious injury or death.**
- **Seats should be adjusted before fastening the seat belts and while the vehicle is parked. Serious injury or death could result from a poorly adjusted seat belt.**

Seat Height Adjustment

The driver's seat height can be raised or lowered by using a lever, located on the outboard side of the seat. Pump the lever upward to raise the seat height, or pump the lever downward to lower the seat height.

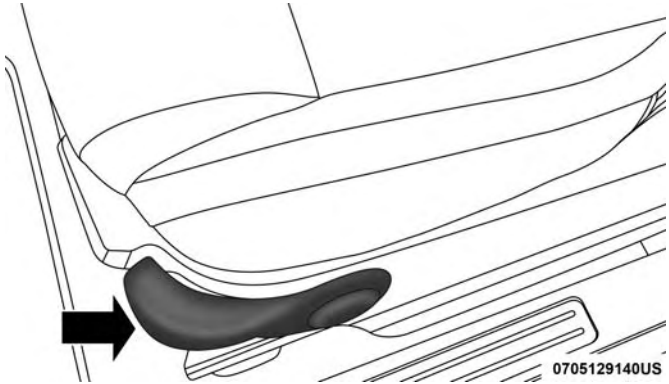

Height Adjuster

Recline Adjustment

The recline adjustment lever is located on the inboard side of the seat. To recline the seatback, lift up the recline lever, lean back until the desired position has been reached, and release the lever.

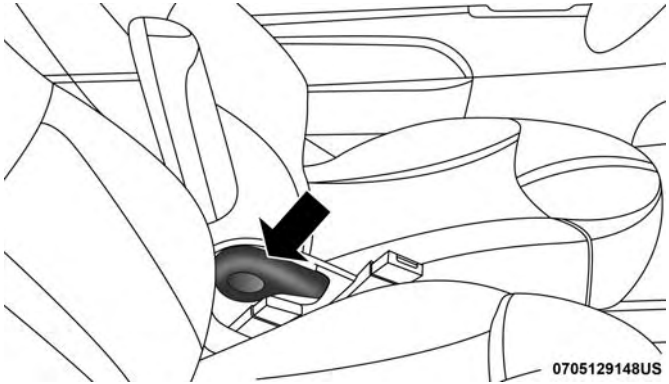

Recline Lever

WARNING!

Do not ride with the seatback reclined so that the shoulder belt is no longer resting against your chest. In a collision you could slide under the seat belt, which could result in serious injury or death.

EZ Entry Feature

The driver and front passenger seats have an EZ entry feature for rear seat passengers. Pull forward on the release lever, located on the outboard side of the seatback, dump the seatback forward, then slide the seat forward to allow access in and out of the rear seat.

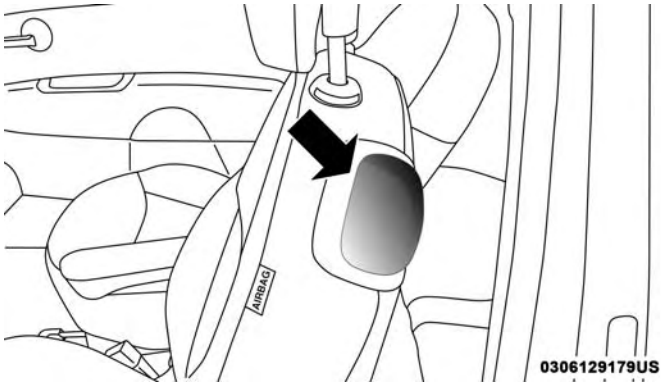

EZ Entry Lever

Lift the seatback upright and push the seat rearward to its locked position once the rear passengers are seated.

Memory Seat Feature

Both front seats have a memory feature, which can operate in two ways:

- Memory Function Option 1 (Full Seat Back And Track Fore/Aft Position Memory) — After using the EZ entry function, the seatback angle and the track fore/aft

adjuster can both re-lock into the position they were most recently adjusted to. This is accomplished if the seat is moved fully rearward to its last fore/aft position on the tracks before the seat back is returned upright.

- Memory Function Option 2 (Seat Back Only Memory) — After using the EZ entry function, the seat back may first be returned upright prior to going back to the last fore/aft (memory) position on the tracks. This results in the seat back memory being set only – The track will then be locked forward of its last set fore/aft memory position. To then reset the fore/aft track memory feature (to reestablish Memory Function Option 1), the seat has to be returned fully rearward to its last fore/aft memory track position as described in Memory Function Option 1.

Heated Seats — If Equipped

On some models, the front driver and passenger seats may be equipped with heaters in both the seat cushions and seatbacks. The controls for the front heated seats are located on the center instrument panel area.

Push the switch once to turn on the heated seats. Push the switch a second time to shut the heating elements off.

NOTE: Once a heat setting is selected, heat will be felt within two to five minutes.

WARNING!

- **Persons who are unable to feel pain to the skin because of advanced age, chronic illness, diabetes, spinal cord injury, medication, alcohol use, exhaustion or other physical condition must exercise care when using the seat heater. It may cause burns even at low temperatures, especially if used for long periods of time.**
- **Do not place anything on the seat or seatback that insulates against heat, such as a blanket or cushion. This may cause the seat heater to overheat. Sitting in a seat that has been overheated could cause serious burns due to the increased surface temperature of the seat.**

Manual Folding Rear Seat

The rear seatbacks have a fold down feature to allow increased cargo capacity.

Push down the release button, located at the outboard top of the seatback and move the seatback to its folded-down position to provide a flat load floor cargo area. When returning the seatback to its upright position, push rearward until the seatback is properly latched.

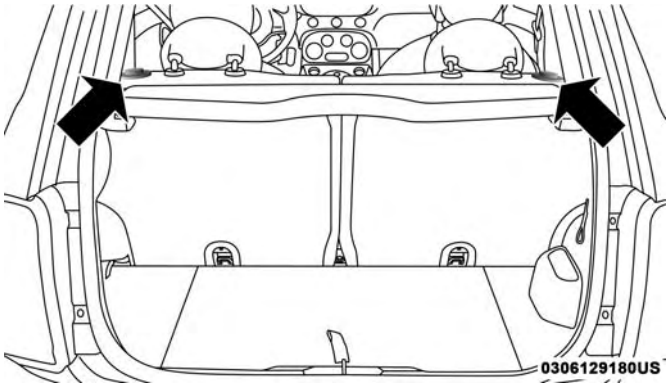

Rear Seat Release Buttons

Folded Rear Seats

WARNING!

Do not pile luggage or cargo higher than the top of the seatback. This could impair visibility or become a dangerous projectile in a sudden stop or collision.

HEAD RESTRAINTS

Head restraints are designed to reduce the risk of injury by restricting head movement in the event of a rear impact. Head restraints should be adjusted so that the top of the head restraint is located above the top of your ear.

WARNING!

- **All occupants, including the driver, should not operate a vehicle or sit in a vehicle's seat until the head restraints are placed in their proper positions in order to minimize the risk of neck injury in the event of a crash.**
- **Head restraints should never be adjusted while the vehicle is in motion. Driving a vehicle with the head restraints improperly adjusted or removed could cause serious injury or death in the event of a collision.**

Reactive Head Restraints — Front Seats

The driver and front passenger seats are equipped with Reactive Head Restraints. In the event of a rear impact, the Reactive Head Restraints will automatically extend forward minimizing the gap between the back of the occupant's head and the Reactive Head Restraint.

To raise the head restraint, pull upward on the head restraint. To lower the head restraint, push the adjustment button, located at the base of the head restraint, and push downward on the head restraint.

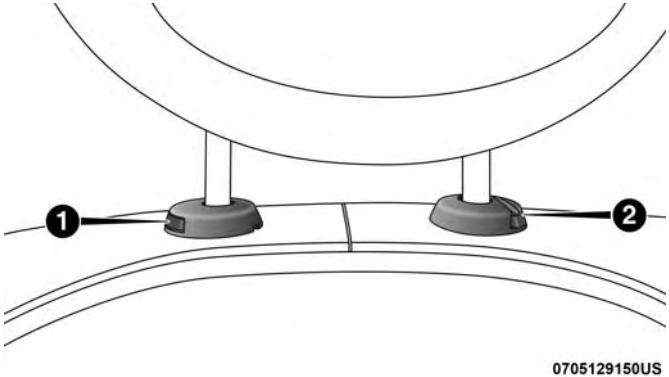

Head Restraint

1 — Release Button
2 — Adjustment Button

The Reactive Head Restraints will automatically return to their normal position following a rear impact. If the Reactive Head Restraints do not return to their normal position, see an authorized dealer immediately.

NOTE: The head restraints should only be removed by qualified technicians, for service purposes only. If either of the head restraints require removal, see an authorized dealer.

WARNING!

- **A loose head restraint thrown forward in a collision or hard stop could cause serious injury or death to occupants of the vehicle. Always securely stow removed head restraints in a location outside the occupant compartment.**
- **ALL the head restraints MUST be reinstalled in the vehicle to properly protect the occupants. Follow the re-installation instructions above prior to operating the vehicle or occupying a seat.**
- **Do not place items over the top of the Reactive Head Restraint, such as coats, seat covers or portable DVD players. These items may interfere with the operation of the Reactive Head Restraint in the event of a collision and could result in serious injury or death.**

Rear Head Restraints

To raise the head restraint, pull upward on the head restraint. To lower the head restraint, push the adjustment button, located at the base of the head restraint, and push downward on the head restraint. Refer to "Occupant Restraint Systems" in "Safety" for information on tether routing.

NOTE: To remove the head restraint, raise it as far as it can go then push the release button and the adjustment button at the base of each post while pulling the head restraint up. To reinstall the head restraint, put the head restraint posts into the holes and push downward. Then adjust the head restraint to the appropriate height.

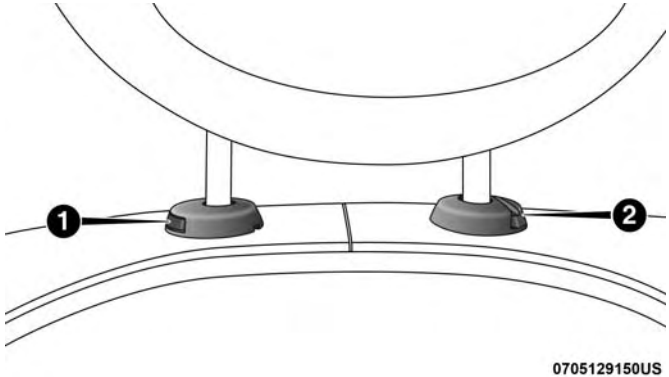

Head Restraint

1 — Release Button
2 — Adjustment Button

WARNING!

ALL the head restraints MUST be reinstalled in the vehicle to properly protect the occupants. Follow the re-installation instructions above prior to operating the vehicle or occupying a seat.

STEERING WHEEL

Tilt Steering Column — If Equipped

This feature allows you to tilt the steering column upward or downward. The tilt control lever is located on the left-side of the steering column, below the turn signal controls.

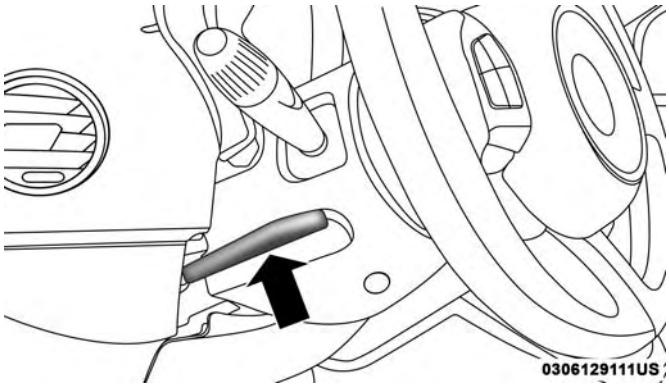

Tilt Control Lever

Push down on the lever to unlock the column. With one hand firmly on the steering wheel, move the steering column up or down as desired. Push the lever up to lock the column firmly in place.

WARNING!

Do not adjust the steering column while driving. Adjusting the steering column while driving or driving with the steering column unlocked, could cause the driver to lose control of the vehicle. Failure to follow this warning may result in serious injury or death.

MIRRORS

Inside Day/Night Mirror

The mirror can be adjusted up, down, left, and right for various drivers. The mirror should be adjusted to center on the view through the rear window.

Headlight glare from vehicles behind you can be reduced by moving the small control under the mirror to the night position (toward the rear of the vehicle). The mirror should be adjusted while set in the day position (toward the windshield).

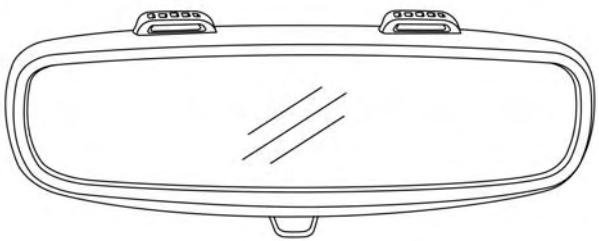

0705129137US

Adjusting Rearview Mirror

Automatic Dimming Mirror — If Equipped

This mirror automatically adjusts for headlight glare from vehicles behind you. You can turn the feature on or off by pushing the button at the base of the mirror. The on/off symbol on the button will illuminate when the auto-dimming feature is enabled.

NOTE: This feature is disabled when the vehicle is moving in REVERSE.

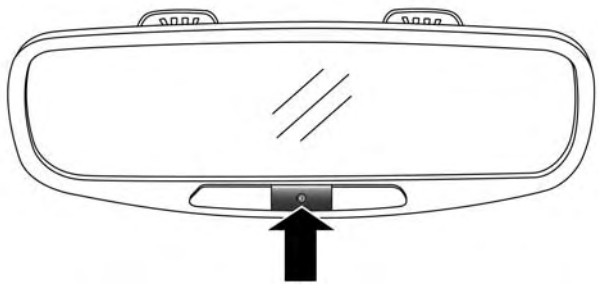

0705129135US

Automatic Dimming Mirror Power Button

CAUTION!

To avoid damage to the mirror during cleaning, never spray any cleaning solution directly onto the mirror. Apply the solution onto a clean cloth and wipe the mirror clean.

Power Mirrors

The power mirror controls are located on the driver's door trim panel.

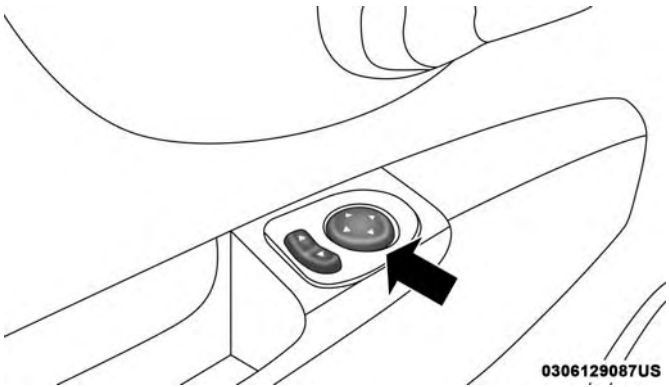

Power Mirror Switches

The power mirror controls consist of a mirror select switch and a four-way mirror control switch. To adjust a mirror, push the mirror select switch to either the L (left) or R (right) to select the mirror you need to adjust.

Using the mirror control switch, push on any of the four arrows for the direction that you want the mirror to move.

WARNING!

Vehicles and other objects seen in the passenger side convex mirror will look smaller and farther away than they really are. Relying too much on your passenger side convex mirror could cause you to collide with another vehicle or other object. Use your inside mirror when judging the size or distance of a vehicle seen in the passenger side convex mirror.

Folding Mirrors

The exterior mirrors are hinged to allow the mirror to pivot forward or rearward to help avoid damage. The mirror has three detent positions: full forward, normal and full rearward.

Spotter Mirror — If Equipped

Some models are equipped with a driver's side spotter mirror. The spotter mirror allows for a greater range of visibility on the driver's side of the vehicle.

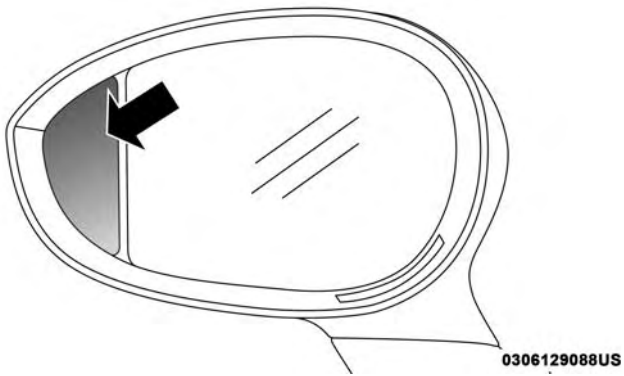

Spotter Mirror

Heated Mirrors — If Equipped

These mirrors are heated to melt frost or ice. This feature will be activated whenever you turn on the rear window defroster (if equipped). Refer to "Climate Controls" in "Getting To Know Your Vehicle" for further information.

EXTERIOR LIGHTS

Multifunction Lever

The multifunction lever, located on the left side of the steering wheel, controls the operation of the headlights, headlight beam selection, passing light and turn signals.

NOTE: The headlights can only be turned on with the ignition in the ON/RUN position.

Headlights

Rotate the end of the multifunction lever upward to the first detent for headlight operation.

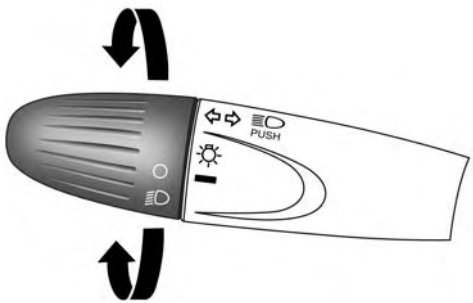

0306129104US

Headlight Operation

NOTE: When the headlights are turned on, the Daytime Running Lights will be deactivated.

Daytime Running Lights

To activate the Daytime Running Lights (DRL), rotate the end of the multifunction lever to the **O** symbol.

NOTE: The low beams and side/taillights will not be on with DRL.

If allowed by law in the country in which the vehicle was purchased the DRL function can be turned on or off using the display menus. Refer to “Uconnect Settings” in “Multimedia” for further information.

High Beams

With the low beams activated, push the multifunction lever towards the instrument panel to turn on the high beams. Pull the multifunction lever toward the steering wheel to turn off the high beams.

Flash-To-Pass

You can signal another vehicle with your headlights by partially pulling the multifunction lever toward the steering wheel. This will cause the high beam headlights to turn on until the lever is released.

Parking Lights

To turn on the parking lights, remove the key or turn the ignition to OFF/LOCK position and turn on the headlights.

Follow Me Home/Headlight Delay

When this feature is selected, the driver can choose to have the headlights remain on for a preset period of time.

Activation

Remove the key or turn the ignition to the STOP (OFF/LOCK) position, and pull the multifunction lever toward the steering wheel within two minutes. Each time the lever is pulled, the activation of the lights will be extended by 30 seconds. The activation of the lights can be extended to a maximum of 210 seconds.

Deactivation

Pull the multifunction lever toward the steering wheel and hold it for more than two seconds.

Fog Lights — If Equipped

The fog light switch is located on the center stack of the instrument panel, just below the radio.

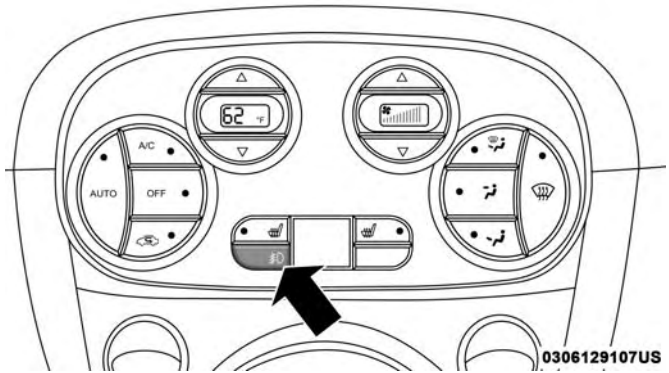

Fog Light Switch

Push the switch once to turn the front fog lights on. Push the switch a second time to turn the front fog lights off.

Turn Signals

Push the multifunction lever upward to signal a right turn or downward to signal a left turn. The corresponding indicator in the instrument cluster display will blink to indicate the operation of the turn signal.

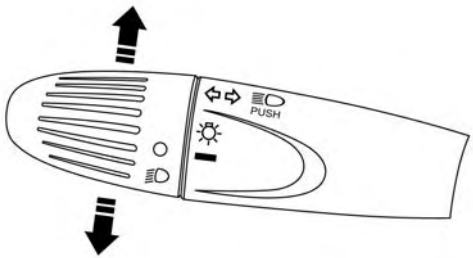

0306129106US

Turn Signal Operation

NOTE: The indicators will automatically turn off when the turn has been completed and the steering wheel is returned to a straight position.

Lane Change Assist

Tap the lever up or down once, without moving beyond the detent, and the turn signal (right or left) will flash three times. Then, the turn signal (right or left) will automatically turn off.

INTERIOR LIGHTS

The interior light switches are located in the overhead console. The interior lights can be set to three different positions (Off/Left Position, Center Position, On/Right Position).

Using the switch on the left overhead, push the switch to the right from its center position and the lights are always on. Push the switch to the left from its center position and the lights are always off. Leave the switch in the center position, and the lights are turned on and off when the doors are opened or closed. The switch on the right side of the overhead console controls the map or reading function of the lights. Push the switch to the right to turn on the right light and push the switch to the left to turn on the left light.

CAUTION!

Before getting out of the vehicle be sure that the switch is in the center position or that the lights are off to avoid draining the battery.

Interior Light Timing (Center Position)

There are four different modes of operation that can be activated in this position:

- When one door is opened, a three minute timer is activated.
- When the key is removed from the ignition (within two minutes of the ignition being turned OFF), a 10 second timer is activated.
- When the doors are unlocked with the key fob, a 10 second timer is activated.
- When the doors are locked with the key fob, the lights will turn off.

Interior Light Timing (On/Right Position)

When all doors are closed a 15-minute timer is activated.

NOTE: The timer is deactivated when the key is moved into the ON/RUN position.

Dimmer Control

The brightness of the instrument panel lighting can be regulated by pushing the buttons on the right side of the instrument cluster. The (+) button increases the brightness and the (-) button decreases the brightness. You can control brightness of the radio by itself or the entire instrument panel. Refer to “Uconnect Settings” in “Multimedia” for more information.

Ambient Light

The vehicle is equipped with ambient light on the center stack. The ambient light will be on when the headlights are turned on by rotating the end of the multifunction lever.

Cargo Area Lights

There is also a courtesy light located in the rear cargo area. Whenever the rear lift gate is opened, the light will turn on and then turn off when the lift gate is closed.

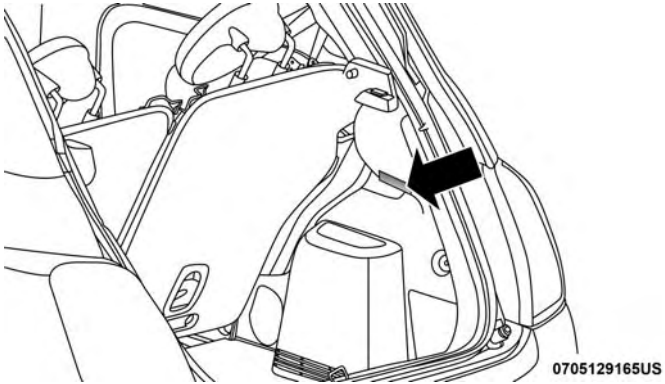

Cargo Light Location

WIPERS AND WASHERS

The windshield wiper/washer lever is located on the right side of the steering column.

NOTE: The windshield wipers/washers will only operate with the ignition in the ON/RUN position.

Front Windshield Wiper Operation

There are four different modes of operation for the front windshield wipers. The windshield wiper lever can be raised or lowered to access these modes:

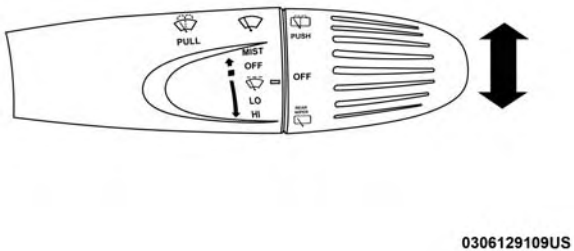

Windshield Wiper Operation

Low Speed

Push the lever downward to the second detent. The wipers will operate at low speed.

High Speed

Push the lever downward to the third detent. The wipers will operate at high speed.

Windshield Wiper Off

This is the normal position of the wiper lever.

Intermittent Wiper Operation

Push the lever downward to the first detent. The wipers will operate intermittently.

NOTE: The Intermittent function only has one detent, but wiper delay will vary with changes in vehicle speed. As vehicle speed increases, the delay time will decrease.

Front Windshield Washer Operation

Pull the windshield wiper/washer lever toward the steering wheel to activate the washers. The wipers will activate automatically for three cycles after the lever is released.

CAUTION!

- **Turn the windshield wipers off when driving through an automatic car wash. Damage to the windshield wipers may result if the wiper control is left in any position other than off.**
- **In cold weather, always turn off the wiper switch and allow the wipers to return to the park position before**

(Continued)

CAUTION! *(Continued)*

turning off the vehicle. If the wiper switch is left on and the wipers freeze to the windshield, damage to the wiper motor may occur when the vehicle is restarted.

- **Always remove any buildup of snow that prevents the windshield wiper blades from returning to the off position. If the windshield wiper control is turned off and the blades cannot return to the off position, damage to the wiper motor may occur.**

Manual High Speed/Mist

Push the lever upward from the off position. The wipers will operate at high speed to clear off road mist or spray from a passing vehicle. This operation will continue until the lever is released. When the lever is released, the wipers will return to the off position and automatically shut off.

Rear Windshield Wiper

Rotate the end of the windshield wiper/washer lever upward to the first detent past the intermittent settings for intermittent wipe operation. With the front windshield wiper active, rotate the end of the windshield wiper/washer lever upward. The rear wiper will operate in the same mode as the front windshield wipers, but at half the

frequency. When the transmission is placed into REVERSE, the rear wiper will automatically operate at Low Speed and return to normal operation when the transmission is placed out of REVERSE.

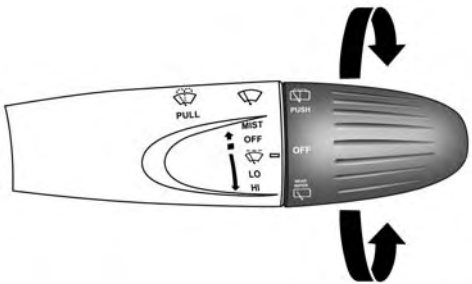

Rear Wiper Operation

NOTE: The windshield wipers/washers will only operate with the ignition in the ON/RUN position.

Rear Windshield Washer Operation

Push the windshield wiper/washer lever toward the instrument panel to activate the rear washer. Push and hold the lever for more than a half second and the wipers will activate automatically for three cycles after the lever is released.

CLIMATE CONTROLS

The Climate Control System allows you to regulate the temperature, air flow, and direction of air circulating throughout the vehicle. The controls are located on the touchscreen (if equipped) and on the instrument panel below the radio.

Automatic Temperature Control Overview

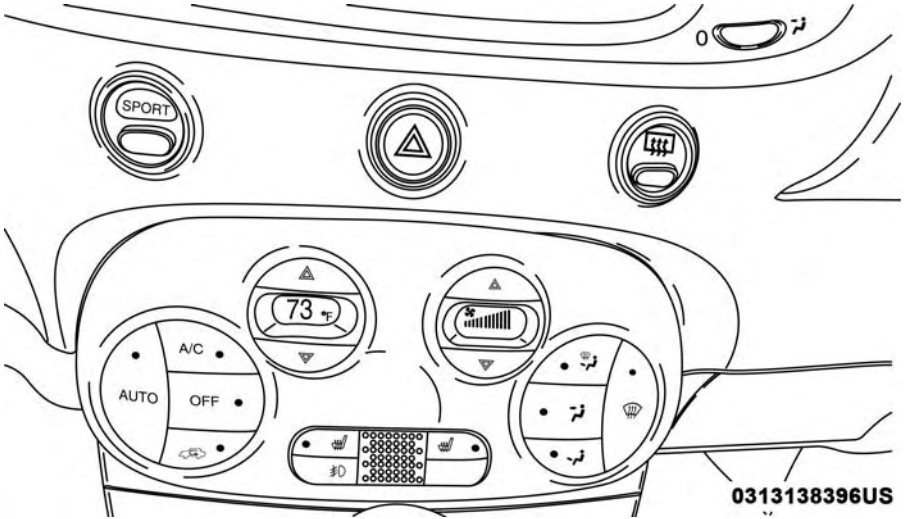

Automatic Temperature Controls

Control Descriptions

Icon	Description
A/C	**A/C Button** Push and release to change the current setting, the indicator illuminates when A/C is ON. Performing this function again will cause the A/C operation to switch into manual mode and the A/C indicator will turn off.
	Recirculation Button Push and release this button on the faceplate to change the system between recirculation mode and outside air mode. Recirculation can be used when outside conditions, such as smoke, odors, dust, or high humidity are present. Recirculation can be used in all modes. Recirculation may be unavailable if conditions exist that could create fogging on the inside of the windshield. The A/C can be deselected manually without disturbing the mode control selection. Continuous use of the Recirculation mode may make the inside air stuffy and window fogging may occur. Extended use of this mode is not recommended.
AUTO	**AUTO Button** Automatically controls the interior cabin temperature by adjusting airflow distribution and amount. Performing this function will cause the system to switch between manual mode and automatic modes. Refer to “Automatic Operation” in this section for more information.

Icon	Description
FRONT	**Front Defrost Button** Push and release to change the current airflow setting to Defrost mode. The indicator illuminates when this feature is ON. Air comes from the windshield and side window demist outlets. When the defrost button is selected, the blower level will increase. Use Defrost mode with maximum temperature settings for best windshield and side window defrosting and defogging. Performing this function will cause the ATC to switch into manual mode. If the front defrost mode is turned off then the climate system returns the previous setting.
Rear Defrost Button	**Rear Defrost Button** Push and release the Rear Defrost Control button to turn on the rear window defroster and the heated outside mirrors (if equipped). An indicator illuminates when the rear window defroster is on. The rear window defroster automatically turns off after a short period of time.
	Blower Control Up And Down Buttons Provides the occupants with blower control. Push the UP button to increase blower speed. Push the DOWN button to decrease blower speed.

Icon	Description
Modes Control: Push the button in the center of the knob to change the airflow distribution mode. The airflow distribution mode can be adjusted so air comes from the instrument panel outlets, floor outlets, defrost outlets and demist outlets. The Mode settings are as follows:	
Panel Mode	**Panel Mode** Air comes from the outlets in the instrument panel. Each of these outlets can be individually adjusted to direct the flow of air. The air vanes of the center outlets and outboard outlets can be moved up and down or side to side to regulate airflow direction. There is a shut off wheel located below the air vanes to shut off or adjust the amount of airflow from these outlets.
Floor Mode	**Floor Mode** Air comes from the floor outlets. A slight amount of air is directed through the defrost and side window demister outlets.
Bi-Level Mode	**Bi-Level Mode** Air comes from the instrument panel outlets and floor outlets. A slight amount of air is directed through the defrost and side window demister outlets. To access this mode, press both the Panel and Floor Mode buttons. **NOTE:** Bi-Level mode is designed under comfort conditions to provide cooler air out of the panel outlets and warmer air from the floor outlets.

Icon	Description
Mix Mode	**Mix Mode** Air is directed through the floor, defrost, and side window demister outlets. This setting works best in cold or snowy conditions that require extra heat to the windshield. This setting is good for maintaining comfort while reducing moisture on the windshield.
OFF	**Climate Control Off Button** Push and release this button to turn the Climate Control on/off.
	Temperature Up And Down Button Provides the occupants with temperature control. Push the Up button for warmer temperature settings. Push the Down button for cooler temperature settings.

Climate Control Functions

A/C (Air Conditioning)

The Air Conditioning (A/C) button allows the operator to manually activate or deactivate the air conditioning system. When the air conditioning system is turned on, cool dehumidified air will flow through the outlets into the cabin. For improved fuel economy, push the A/C button to turn off the air conditioning and manually adjust the blower and airflow mode settings. Also, make sure to select only Panel, Bi-Level or Floor modes.

NOTE:

- For Manual Climate Controls, if the system is in Mix, Floor or Defrost Mode, the A/C can be turned off, but the A/C system shall remain active to prevent fogging of the windows.
- If fog or mist appears on the windshield or side glass, select Defrost mode, and increase blower speed if needed.
- If your air conditioning performance seems lower than expected, check the front of the A/C condenser (located in front of the radiator), for an accumulation of dirt or insects. Clean with a gentle water spray from the front of the radiator and through the condenser.

Recirculation

In cold weather, use of Recirculation mode may lead to excessive window fogging. The Recirculation feature may be unavailable (button on the touchscreen greyed out) if conditions exist that could create fogging on the inside of the windshield.

Automatic Temperature Control (ATC)

Automatic Operation

1. Push the AUTO button on the faceplate.
2. Next, adjust the temperature you would like the system to maintain by adjusting the temperature control buttons. Once the desired temperature is displayed, the system achieves and automatically maintains that comfort level.
3. When the system is set up for your comfort level, it is not necessary to change the settings. You experience the greatest efficiency by simply allowing the system to function automatically.

NOTE:

- It is not necessary to move the temperature settings for cold or hot vehicles. The system automatically adjusts the temperature, mode, and blower speed to provide comfort as quickly as possible.
- The temperature can be displayed in U.S. or Metric units by selecting the US/Metric customer-programmable feature.

To provide you with maximum comfort in the Automatic mode during cold start-ups, the blower fan remains on low until the vehicle warms up. The blower increases in speed and transition into Auto mode.

Manual Operation Override

This system offers a full complement of manual override features. The AUTO symbol in the front ATC display will be turned off when the system is being used in the manual mode.

NOTE: The system will not automatically sense the presence of fog, mist or ice on the windshield. Defrost mode must be manually selected to clear the windshield and side glass.

Operating Tips

NOTE: Refer to the chart at the end of this section for suggested control settings for various weather conditions.

Summer Operation

The vehicle cooling system must be protected with a high-quality antifreeze coolant to provide proper corrosion protection and to protect against vehicle overheating. OAT coolant (conforming to MS.90032) is recommended.

Winter Operation

To ensure the best possible heater and defroster performance, make sure the vehicle cooling system is functioning properly and the proper amount, type, and concentration of coolant is used. Use of the Air Recirculation mode during Winter months is not recommended, because it may cause window fogging.

Vacation/Storage

Before you store your vehicle, or keep it out of service (i.e., vacation) for two weeks or more, run the air conditioning system at idle for about five minutes, in fresh air with the blower setting on high. This ensures adequate system lubrication to minimize the possibility of compressor damage when the system is started again.

NOTE: If the vehicle is parked and off charge for longer than two months, the 12V battery should be disconnected.

Window Fogging

Vehicle windows tend to fog on the inside in mild, rainy and/or humid weather. To clear the windows, select Defrost or Mix mode and increase the front blower speed. Do not use the Recirculation mode without A/C for long periods, as fogging may occur.

CAUTION!

Failure to follow these cautions can cause damage to the heating elements:

- **Use care when washing the inside of the rear window. Do not use abrasive window cleaners on the interior surface of the window. Use a soft cloth and a mild washing solution, wiping parallel to the heating elements. Labels can be peeled off after soaking with warm water.**
- **Do not use scrapers, sharp instruments, or abrasive window cleaners on the interior surface of the window.**
- **Keep all objects a safe distance from the window.**

Outside Air Intake

Make sure the air intake, located directly in front of the windshield, is free of obstructions such as leaves. Leaves collected in the air intake may reduce airflow, and if they enter the plenum, they could plug the water drains. In winter months, make sure the air intake is clear of ice, slush, and snow.

A/C Air Filter

The climate control system filters out dust and pollen from the air. Contact an authorized dealer to service your A/C air filter, and to have it replaced when needed.

Operating Tips Chart

WEATHER	CONTROL SETTINGS
Hot weather and vehicle interior is very hot	Set the mode control to , on, and blower on high. Roll down the windows for a minute to flush out the hot air. Once comfort is achieved adjust controls for comfort.
Warm weather	Turn on and set the mode control to the position.
Cool Sunny	Operate in position.
Cool & Humid conditions	Set the mode control to and turn on to keep windows clear.
Cold Weather	Set the mode control to the position. If windshield fogging starts to occur, move the control towards the position.

8000cb71

WINDOWS

Power Window Controls

The power window controls are located on the shifter bezel, below the climate controls, which operate the driver and passenger door windows. The window controls will operate when the ignition switch is in the MAR (ACC/ON/RUN) position.

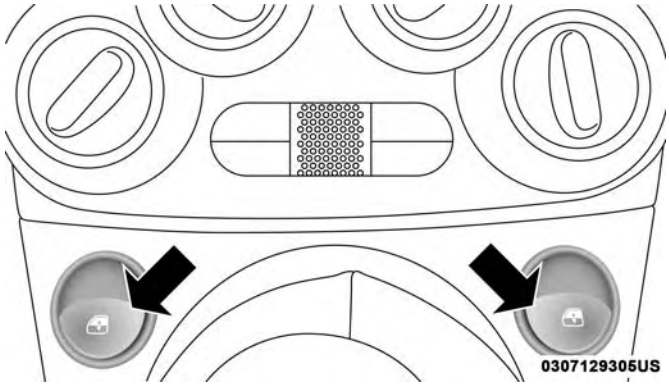

Power Window Switches

WARNING!

Never leave children unattended in a vehicle, and do not let children play with power windows. Do not leave the key fob in or near the vehicle, or in a location accessible to children. Occupants, particularly unattended children, can become entrapped by the windows while operating the power window switches. Such entrapment may result in serious injury or death.

Auto-Down

The window switches have an Auto-Down feature. Push the window switch for approximately one second, release, and the window will go down automatically. To cancel the Auto-Down movement, operate the switch in either the up or down direction and release the switch. To open the window part way, pull the window switch briefly, and release the switch when the window is in the desired position.

Wind Buffeting

Wind buffeting can be described as the perception of pressure on the ears or a helicopter-type sound in the ears. Your vehicle may exhibit wind buffeting with the windows down, or the sunroof (if equipped) in certain open or partially open positions. This is a normal occurrence and can be minimized. If the buffeting occurs with the rear windows open, open the front and rear windows together to minimize the buffeting. If the buffeting occurs with the sunroof open, adjust the sunroof opening to minimize the buffeting or open any window.

POWER SUNROOF — IF EQUIPPED

The power sunroof switch is located in the overhead console.

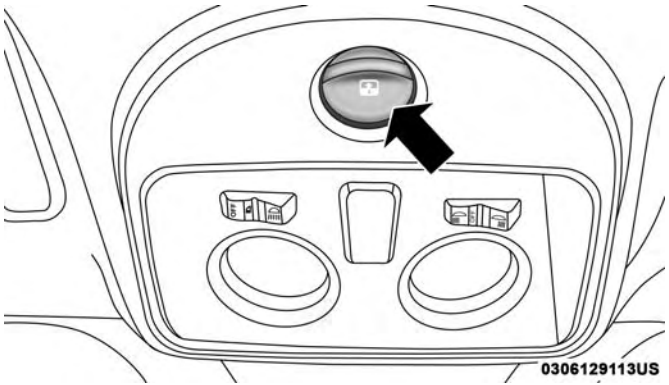

Power Sunroof Switch

WARNING!

- **Never leave children alone in a vehicle, or with access to an unlocked vehicle. Never leave the key fob in or near the vehicle or in a location accessible to children. Occupants, particularly unattended children, can become entrapped by the power sunroof while operating the power sunroof switch. Such entrapment may result in serious injury or death.**
- **In a collision, there is greater risk of being thrown from a vehicle with an open sunroof. You could also be seriously injured or killed. Always fasten your seat belt properly and make sure all passengers are properly secured too.**
- **Do not allow small children to operate the sunroof. Never allow your fingers, other body parts, or any object to project through the sunroof opening. Injury may result.**

To Open

Push and hold the power sunroof switch rearward for approximately one second and the sunroof will stop at the vented position. Push the switch a second time and hold for approximately one second and release, the sunroof will open fully, then stop automatically. This is called "Express Open". During Express Open operation, any movement of the sunroof switch will stop the sunroof.

To Close

With the sunroof in the full open position, pull the power sunroof button and hold it for approximately one second, the sunroof will return to the vented position. Pull the switch a second time and hold for approximately one second to completely close the sunroof.

Wind Buffeting

Wind buffeting can be described as the perception of pressure on the ears or a helicopter-type sound in the ears. Your vehicle may exhibit wind buffeting with the windows down, or the sunroof (if equipped) in certain open or partially open positions. This is a normal occurrence and can be minimized. If the buffeting occurs with the rear windows open, open the front and rear windows together to minimize the buffeting. If the buffeting occurs with the sunroof open, adjust the sunroof opening to minimize the buffeting or open any window.

Sun Shade — If Equipped

For vehicles equipped with either a power sunroof or a fixed glass roof, there is a sun shade that can be open or

closed. To open the sun shade, push the tab and move the shade to a full open position.

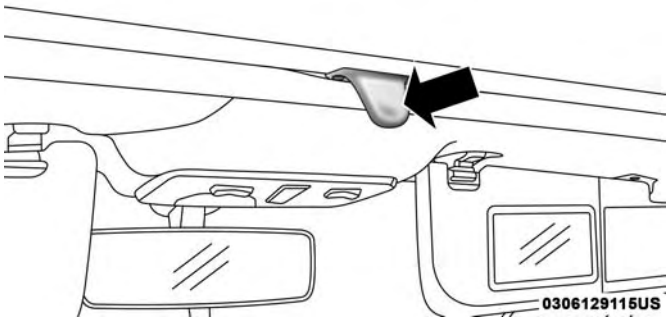

Manual Sun Shade

Pinch Protect Feature

This feature will detect an obstruction in the opening of the sunroof during Express Close operation. If an obstruction in the path of the sunroof is detected, the sunroof will automatically retract. Remove the obstruction if this occurs. Next, push the switch forward and release to Express Close.

Emergency Operation

In case of electrical failure, the sunroof can be operated with the hex wrench that is located in the glove compartment. There is a plug located in the rear of the sunroof opening at the center of the vehicle. Removing the plug reveals a hex opening in the motor assembly of the sunroof. Insert the hex wrench and turn, moving the sunroof to the desired location.

HOOD

Opening

To open the hood, two latches must be released.

1. Pull the bottom of the RED hood release lever, located on the left kick panel, rearward.

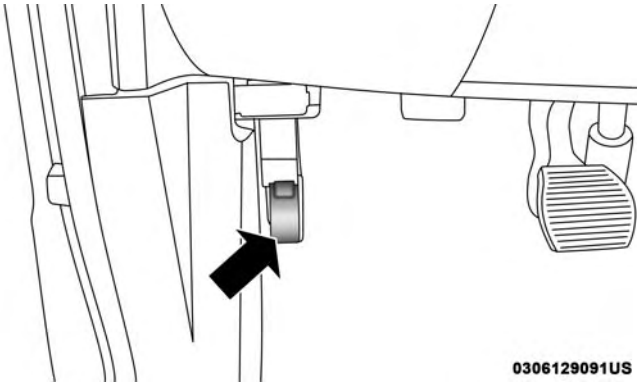

Hood Release Lever

2. Slide the safety catch under the front edge of the hood, near the center, to the right. Then raise the hood.

Hood Safety Latch Location

3. Lift the hood prop rod that clips to the right side (left side when standing in front of the hood) of the under-hood compartment. Place the hood prop rod in the hole of hood hinge to secure the hood in the open position.

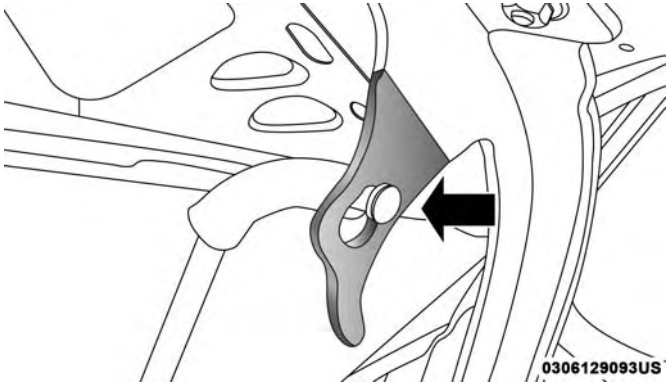

Hood Prop Rod

In hot climates, the prop rod may be hot. Pick up the prop rod at the foam on the end of the prop rod.

Closing

WARNING!

Be sure the hood is fully latched before driving your vehicle. If the hood is not fully latched, it could open when the vehicle is in motion and block your vision. Failure to follow this warning could result in serious injury or death.

CAUTION!

To prevent possible damage, do not slam the hood to close it. Lower hood to approximately 12 inches (30 cm) and drop the hood to close. Make sure hood is fully closed for both latches. Never drive vehicle unless hood is fully closed, with both latches engaged.

INTERNAL EQUIPMENT

Storage

Glove Compartment

The glove compartment is located on the passenger side of the instrument panel.

To open the glove compartment, pull the release handle.

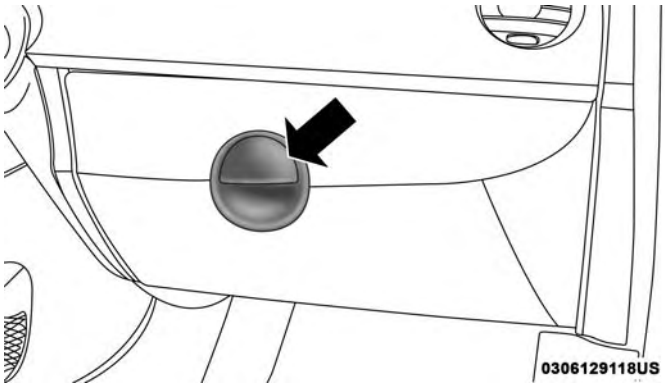

Glove Compartment Latch

Cupholders

Front Cupholders

For the driver and front passenger, cupholders are located on the floor console between the front seats.

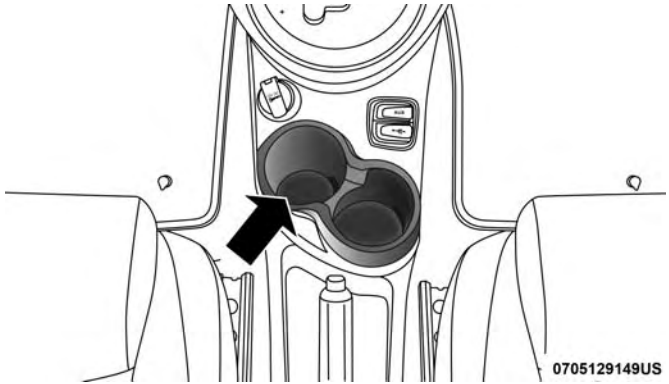

Front Cupholders

Rear Cupholders

For rear passengers, there are cupholders located on the floor between the front driver and passenger seats.

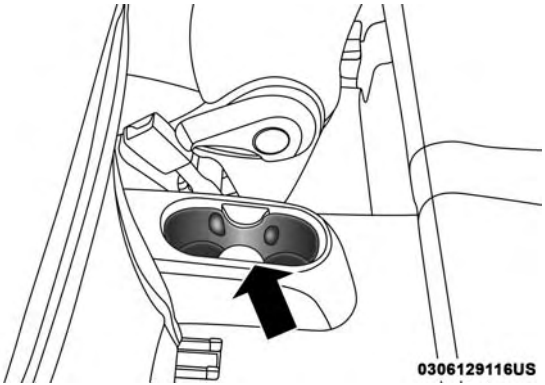

Rear Cupholders

Sun Visors

The driver and passenger sun visors are located on the headliner, near the front windshield. The sun visors can be rotated downward or up against the door glass. Both sun visors are equipped with courtesy mirrors. To view the courtesy mirror, slide the mirror cover outward.

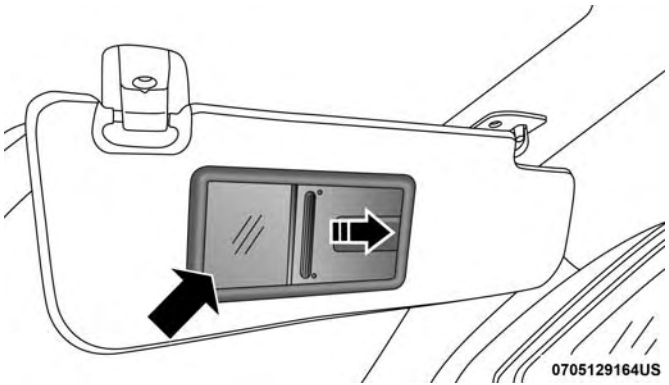

Slide Courtesy Mirror Cover Outward (Passenger Side Shown)

Electrical Power Outlets

There is a standard 12 Volt (13 Amp) power outlet, located in the floor console, for added convenience. This power outlet can power mobile phones, electronics and other low power devices.

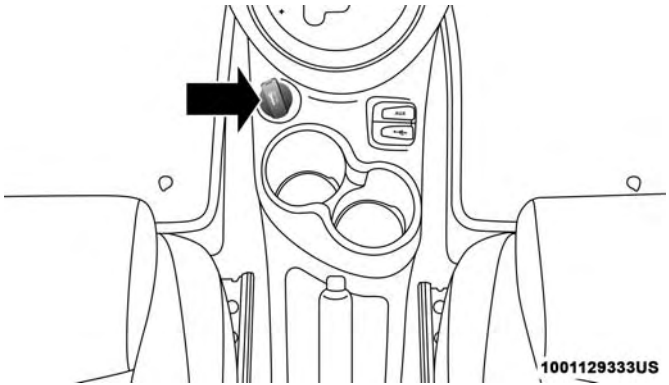

Center Stack Power Outlet

Power is available when the ignition switch is in the ON/RUN or START position. Insert the cigar lighter or accessory plug into the outlet for use. To preserve the heating element, do not hold the lighter in the heating position.

CAUTION!

- **Do not exceed the maximum power of 160 Watts (13 Amps) at 12 Volts. If the 160 Watts (13 Amps) power rating is exceeded, the fuse protecting the system will need to be replaced.**
- **Power outlets are designed for accessory plugs only. Do not insert any other object in the power outlets as this will damage the outlet and blow the fuse. Improper use of the power outlet can cause damage not covered by your New Vehicle Limited Warranty.**

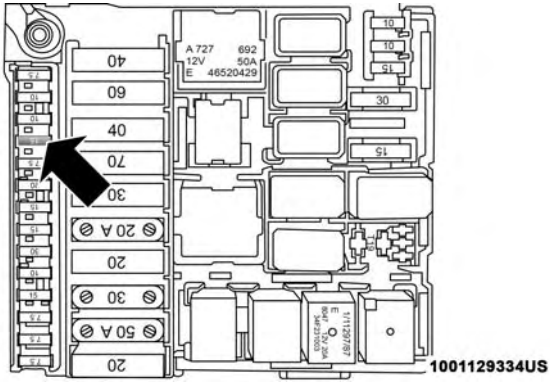

Power Outlet Fuse Location – Underhood

F15 Fuse 15 A Blue Cigar Lighter Front Console/Aux Power Outlet

WARNING!

To avoid serious injury or death:

- **Only devices designed for use in this type of outlet should be inserted into any 12 Volt outlet.**
- **Do not touch with wet hands.**
- **Close the lid when not in use and while driving the vehicle.**

(Continued)

WARNING! *(Continued)*

- **If this outlet is mishandled, it may cause an electric shock and failure.**

CAUTION!

- **Many accessories that can be plugged in draw power from the vehicle's battery, even when not in use (i.e., cellular phones, etc.). Eventually, if plugged in long enough, the vehicle's battery will discharge sufficiently to degrade battery life and/or prevent the vehicle from moving.**
- **Accessories that draw higher power (i.e., coolers, vacuum cleaners, lights, etc.) will degrade the battery even more quickly. Only use these intermittently and with great caution.**
- **After the use of high power draw accessories, or long periods of the vehicle not being charged (with accessories still plugged in), the vehicle will likely need to be charged.**

LIFTGATE

Opening

To unlock the liftgate, use the key fob or activate the power door lock switches located on the driver door handle.

To open the liftgate, squeeze the liftgate release handle and pull the liftgate open with one fluid motion.

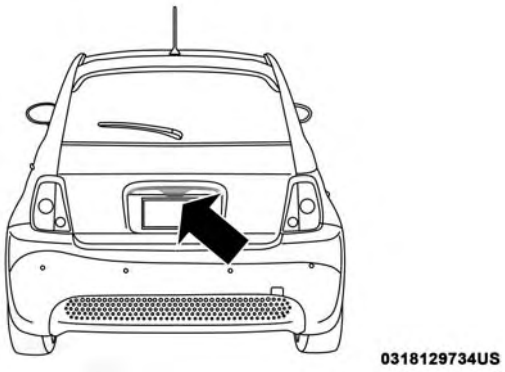

Liftgate Handle

NOTE: Gas props support the liftgate in the open position. However, because the gas pressure drops with temperature, it may be necessary to assist the props when opening the liftgate in cold weather.

GETTING TO KNOW YOUR INSTRUMENT PANEL

CONTENTS

■ INSTRUMENT CLUSTER 86
- □ Instrument Cluster Descriptions 86

■ INSTRUMENT CLUSTER DISPLAY 87
- □ Instrument Cluster Display And Controls. 87
- □ Display Menu Set-Up. 89

■ TRIP COMPUTER. 90
- □ Trip Button 90
- □ Trip Functions 91
- □ Values Displayed 91

■ WARNING LIGHTS AND MESSAGES 92
- □ Red Warning Lights 92
- □ Yellow Warning Lights 95
- □ Yellow Indicator Lights 98
- □ Green Indicator Lights 99
- □ White Indicator Lights 99
- □ Blue Indicator Lights 100

■ ONBOARD DIAGNOSTIC SYSTEM — OBD II . . .100
- □ Onboard Diagnostic System (OBD II) Cybersecurity 100

INSTRUMENT CLUSTER

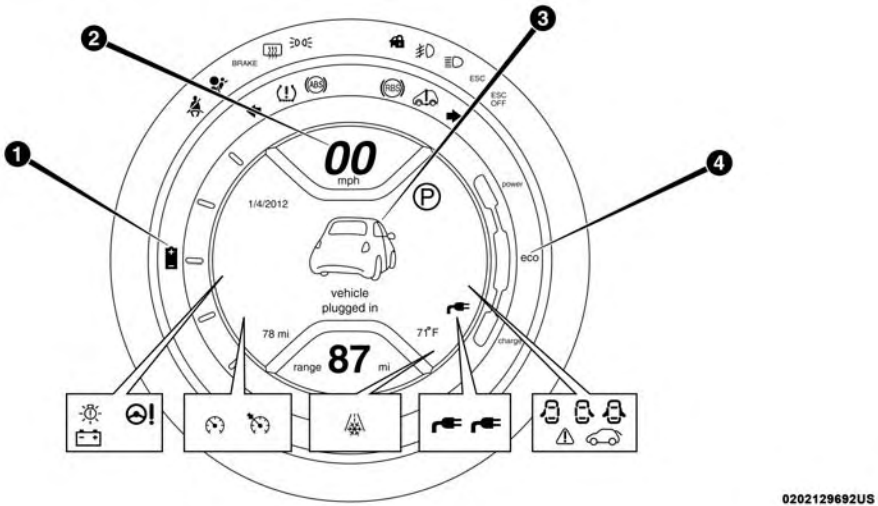

Instrument Cluster

Instrument Cluster Descriptions

1. **Battery Charge Gauge**
   - This gauge indicates the charge level of the battery.
2. **Speedometer**
   - Indicates vehicle speed.

3. **Instrument Cluster Display**
   - The instrument cluster display shows messages, when the appropriate conditions exist. Refer to "Instrument Cluster Display" in "Getting To Know Your Instrument Panel" for further information.

4. **Power Flow Gauge**

This gauge indicates how battery energy is being used by the vehicle:

- ECO Mode (Green): The vehicle is conserving energy.
- POWER Mode (Red): The vehicle is utilizing energy.
- CHARGE Mode (Purple): The vehicle is regenerating energy.

INSTRUMENT CLUSTER DISPLAY

Your vehicle may be equipped with an instrument cluster display, which offers useful information to the driver. With the ignition in the STOP/OFF position, opening/closing of a door will activate the display for viewing, and display the total miles, or kilometers, in the odometer. The instrument cluster display is designed to display important information about the vehicle's systems and features. Using a driver interactive display located on the instrument panel, your instrument cluster display can show you how systems are working and give you warnings when they aren't. The steering wheel mounted controls allow you to scroll through and enter the main menus and submenus. You can access the specific information you want and make selections and adjustments.

Instrument Cluster Display And Controls

The instrument cluster display features a driver-interactive display that is located in the instrument cluster.

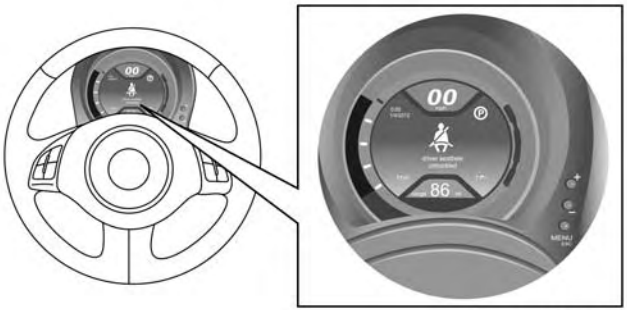

Instrument Cluster Display

The instrument cluster display consists of the following:

- System Status
- Vehicle Information Warning Message Displays

- Outside Temperature Display
- Trip Computer Functions
- Tire Pressure Monitoring Display
- Range

Instrument Cluster Display Control Buttons

The instrument cluster display control buttons are located on the right side of the instrument cluster. There are three control buttons that are used to navigate through the instrument cluster display functions:

- Up Button
- Down Button
- MENU Button

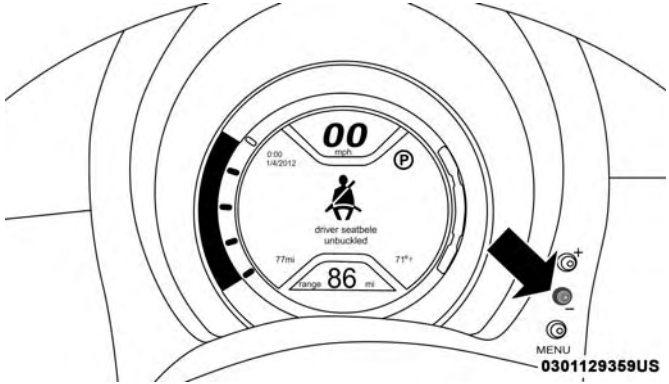

Instrument Cluster Display Control Buttons

Push and release the **MENU** button briefly to access the instrument cluster display. Push and hold the **MENU** button (approximately one second) to return to the main screen.

Push and release the Up button to scroll upward through the displayed menu and the related options or to increase the displayed value.

Push and release the Down button to scroll downward through the displayed menu and the related options or to decrease the value displayed.

NOTE: The Up and Down buttons activate different functions according to the following situations:

- To scroll the menu options upwards or downwards.
- To increase or decrease values during settings.

NOTE: When opening one of the front doors, the instrument cluster display will turn on the clock and the miles or kilometers covered (if equipped) for a few seconds.

NOTE: When the Uconnect "Display Mode" feature is set to "Auto", the instrument cluster display Up and Down control buttons may be used to adjust the brightness of the entire Instrument Panel (e.g. Instrument Cluster, Radio, and Climate Controls). Refer to "Uconnect Settings" in "Multimedia" for further information.

Display Menu Set-Up

The menu comprises a series of functions arranged in a cycle. Push and release the **up** arrow and **down** arrow to access the different options and settings (setup).

The setup menu can be activated by pushing the **MENU** button. Single pushes on the **up** arrow or **down** arrow will scroll through the setup menu options. The menu includes the following functions:

- Battery % Display
- Button Volume
- Stored Warnings
- Tutorial
- Connectivity ID
- Restore Factory Settings
- Exit Menu

Selecting An Option Of The Main Menu Without Submenu:

1. Briefly push and release the **MENU** button to select the main menu option to set.
2. Push and release the **up** arrow and **down** arrow (by single pushes) to select the new setting.
3. Briefly push and release the **MENU** button to store the new setting and go back to the main menu option previously selected.

Selecting An Option Of The Main Menu With Submenu:

1. Briefly push and release the **MENU** button to display the first submenu option.
2. Push and release the **up** arrow and **down** arrow (by single pushes) to scroll through all the submenu options.

3. Briefly push and release the **MENU** button to select the displayed submenu option and to open the relevant setup menu.
4. Push and release the **up** arrow and **down** arrow (by single pushes) to select the new setting for this submenu option.
5. Briefly push and release the **MENU** button to store the new setting and go back to the previously selected submenu option.
6. Push and hold the **MENU** button to return to the main menu (short hold) or the main screen (longer hold).

TRIP COMPUTER

The Trip Computer is located in the instrument cluster. It displays trip information such as: average speed, distance traveled, average energy, time traveled, motor power, and tire pressure.

Trip Button

The **TRIP** button is located on the right steering column stalk.

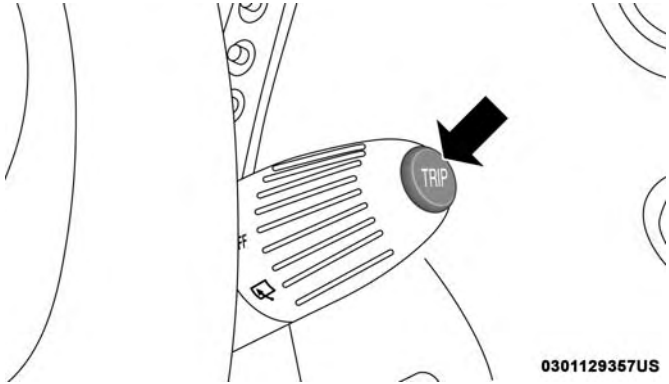

Trip Button

- A short button push scrolls through the user-selectable information.
- A long button push resets.

The User-Selectable options are:

- Motor Power (Kilowatts)
- Trip A
- Trip B
- Tire Pressure

New Trip

To reset:

- Push and hold the TRIP button manually.
- When the "Trip Distance" reaches 9999.9 miles/kilometers or when the "Elapsed Time" reaches 29.59 (29 hours and 59 minutes) the system will reset automatically.
- Trip can also be reset remotely through the radio.

Trip Functions

Both trip functions are resettable (reset — start of new trip).

"Trip A" can be used to display the figures relating to:

- Distance
- Avg. Energy
- Avg. Speed
- Elapsed Time (Driving Time)

"Trip B" can be used to display the figures relating to:

- Distance
- Avg. Energy
- Avg. Speed
- Elapsed Time (Driving Time)

Values Displayed

Range

This indicates the distance which may be travelled with the remaining battery charge, assuming that driving conditions will not change. The message "----" will appear when the system is initializing.

NOTE: The range depends on several factors: driving style, type of route (freeway, residential, mountain roads, etc.), conditions of use of the car (load, tire pressure, etc.). Trip planning must take into account the above notes.

Distance Traveled

This value shows the distance covered since the last reset.

Average Speed

This value shows the vehicle's average speed as a function of the overall time elapsed since the last reset.

Average Energy

This value shows the vehicle's average energy consumption as a function of the overall time elapsed since the last reset.

Elapsed Time

This value shows the time elapsed since the last reset.

WARNING LIGHTS AND MESSAGES

The warning/indicator lights will illuminate in the instrument panel together with a dedicated message and/or acoustic signal when applicable. These indications are indicative and precautionary and as such must not be considered as exhaustive. Always refer to the information in this chapter in the event of a failure indication. All active telltales will display first if applicable. The system check menu may appear different based upon equipment options and current vehicle status. Some telltales are optional and may not appear.

Red Warning Lights

— Air Bag Warning Light

This warning light will illuminate to indicate a fault with the air bag, and will turn on for four to eight seconds as a bulb check when the ignition is placed in the ON/RUN or ACC/ON/RUN position. This light will illuminate with a single chime when a fault with the air bag has been detected, it will stay on until the fault is cleared. If the light is either not on during startup, stays on, or turns on while driving, have the system inspected at an authorized dealer as soon as possible.

BRAKE — Brake Warning Light

This warning light monitors various brake functions, including brake fluid level and parking brake application. If the brake light turns on it may indicate that the parking brake is applied, that the brake fluid level is low, or that there is a problem with the anti-lock brake system reservoir.

If the light remains on when the parking brake has been disengaged, and the fluid level is at the full mark on the master cylinder reservoir, it indicates a possible brake hydraulic system malfunction or that a problem with the Brake Booster has been detected by the Anti-Lock Brake System (ABS) / Electronic Stability Control (ESC) system. In this case, the light will remain on until the condition has been corrected. If the problem is related to the brake booster, the ABS pump will run when applying the brake, and a brake pedal pulsation may be felt during each stop.

The dual brake system provides a reserve braking capacity in the event of a failure to a portion of the hydraulic system. A leak in either half of the dual brake system is

indicated by the Brake Warning Light, which will turn on when the brake fluid level in the master cylinder has dropped below a specified level.

The light will remain on until the cause is corrected.

NOTE: The light may flash momentarily during sharp cornering maneuvers, which change fluid level conditions. The vehicle should have service performed, and the brake fluid level checked.

If brake failure is indicated, immediate repair is necessary.

WARNING!

Driving a vehicle with the red brake light on is dangerous. Part of the brake system may have failed. It will take longer to stop the vehicle. You could have a collision. Have the vehicle checked immediately.

Vehicles equipped with the Anti-Lock Brake System (ABS) are also equipped with Electronic Brake Force Distribution (EBD). In the event of an EBD failure, the Brake Warning Light will turn on along with the ABS Light. Immediate repair to the ABS system is required.

Operation of the Brake Warning Light can be checked by turning the ignition switch from the OFF position to the ON/RUN position. The light should illuminate for approximately two seconds. The light should then turn off unless the parking brake is applied or a brake fault is detected. If the light does not illuminate, have the light inspected by an authorized dealer.

The light also will turn on when the parking brake is applied with the ignition switch in the ON/RUN position.

NOTE: This light shows only that the parking brake is applied. It does not show the degree of brake application.

— Battery Charge Warning Light

This light illuminates when the battery is not charging properly. If it stays on while the vehicle is running, there may be a malfunction with the charging system. Contact your authorized dealer as soon as possible.

This indicates a possible problem with the electrical system or a related component.

— Door Open Warning Light

This indicator will illuminate when one or more door(s) are not fully closed.

NOTE: If the vehicle is moving and a door is opened, there will also be a single chime.

— Electric Power Steering Fault Warning Light

This warning light will turn on when there's a fault with the EPS (Electric Power Steering) system. Refer to "Power Steering" in "Starting And Operating" for further information.

WARNING!

Continued operation with reduced assist could pose a safety risk to yourself and others. Service should be obtained as soon as possible.

— Hood Open Warning Light — If Equipped

This warning light will illuminate when the hood is left open and not fully closed.

— Liftgate Open Warning Light

This indicator will illuminate when the liftgate is open and not fully closed.

— Plugged In Malfunction Indicator Light

This warning light will illuminate red if there is a malfunction or interruption during the vehicle charging process. This warning light will also appear red alongside a "Charging Interrupted" message in the Instrument Cluster Display.

— Seat Belt Reminder Warning Light

This warning light indicates when the driver or passenger seat belt is unbuckled. When the ignition is first placed in the ON/RUN or ACC/ON/RUN position and if the driver's seat belt is unbuckled, a chime will sound and the light will turn on. When driving, if the driver or front passenger seat belt remains unbuckled, the Seat Belt Reminder Light will flash or remain on continuously and a chime will sound.

Refer to "Occupant Restraint Systems" in "Safety" for further information.

⚠ — Service Propulsion System Warning Light

The Service Propulsion System Warning Light will illuminate if there is a malfunction detected with the Propulsion System. If the light comes on or remains on while driving see your authorized dealer.

Yellow Warning Lights

— Anti-Lock Brake (ABS) Warning Light

This warning light monitors the Anti-Lock Brake System (ABS). The light will turn on when the ignition is placed in the ON/RUN or ACC/ON/RUN position and may stay on for as long as four seconds.

If the ABS light remains on or turns on while driving, then the Anti-Lock portion of the brake system is not functioning and service is required as soon as possible. However, the conventional brake system will continue to operate normally, assuming the Brake Warning Light is not also on.

If the ABS light does not turn on when the ignition is placed in the ON/RUN or ACC/ON/RUN position, have the brake system inspected by an authorized dealer.

— Electronic Park Brake Warning Light

This warning light will illuminate to indicate the Electronic Park Brake is not functioning properly and service is required. Contact an authorized dealer.

— Electronic Stability Control (ESC) Active Warning Light — If Equipped

This light will indicate when the Electronic Stability Control system is Active. The "ESC Indicator Light" in the instrument cluster will come on when the ignition is placed in the ON/RUN or ACC/ON/RUN position, and when ESC is activated. It should go out with the vehicle running. If the "ESC Indicator Light" comes on continuously with the vehicle running, a malfunction has been detected in the ESC system. If this light remains on after several ignition cycles, and the vehicle has been driven several miles (kilometers) at speeds greater than 30 mph (48 km/h), see your authorized dealer as soon as possible to have the problem diagnosed and corrected.

- The "ESC Off Indicator Light" and the "ESC Indicator Light" come on momentarily each time the ignition is placed in the ON/RUN or ACC/ON/RUN position.
- The ESC system will make buzzing or clicking sounds when it is active. This is normal; the sounds will stop when ESC becomes inactive.
- This light will come on when the vehicle is in an ESC event.

— Electronic Stability Control (ESC) Off Warning Light — If Equipped

This warning light indicates the Electronic Stability Control (ESC) is off.

Each time the ignition is turned to ON/RUN or ACC/ON/RUN, the ESC system will be on, even if it was turned off previously.

— External Light Failure Indicator Light — If Equipped

The External Light Failure Indicator will come on when a failure to one of the following lights is detected:

- Direction Indicators
- Backup Lights
- Parking Lights
- Daytime Running Lights
- License Plate Lights

The failure relating to these lights could be:

- One or more blown bulbs
- A blown protection fuse
- A break in the electrical connection

— Tire Pressure Monitoring System (TPMS) Warning Light

The warning light switches on and a message is displayed to indicate that the tire pressure is lower than the recommended value and/or that slow pressure loss is occurring. In these cases, optimal tire duration and fuel consumption may not be guaranteed.

Should one or more tires be in the condition mentioned above, the display will show the indications corresponding to each tire.

CAUTION!

Do not continue driving with one or more flat tires as handling may be compromised. Stop the vehicle, avoiding sharp braking and steering. If a tire puncture occurs, repair immediately using the dedicated tire repair kit and contact an authorized dealer as soon as possible.

Each tire, including the spare (if provided), should be checked monthly when cold and inflated to the inflation pressure recommended by the vehicle manufacturer on the vehicle placard or tire inflation pressure label. (If your vehicle has tires of a different size than the size indicated

on the vehicle placard or tire inflation pressure label, you should determine the proper tire inflation pressure for those tires.)

As an added safety feature, your vehicle has been equipped with a Tire Pressure Monitoring System (TPMS) that illuminates a low tire pressure telltale when one or more of your tires is significantly under-inflated. Accordingly, when the low tire pressure telltale illuminates, you should stop and check your tires as soon as possible, and inflate them to the proper pressure. Driving on a significantly under-inflated tire causes the tire to overheat and can lead to tire failure. Under-inflation also reduces fuel efficiency and tire tread life, and may affect the vehicle's handling and stopping ability.

Please note that the TPMS is not a substitute for proper tire maintenance, and it is the driver's responsibility to maintain correct tire pressure, even if under-inflation has not reached the level to trigger illumination of the TPMS low tire pressure telltale.

Your vehicle has also been equipped with a TPMS malfunction indicator to indicate when the system is not operating properly. The TPMS malfunction indicator is combined with the low tire pressure telltale. When the system detects a malfunction, the telltale will flash for approximately one minute and then remain continuously illuminated. This sequence will continue upon subsequent vehicle start-ups as long as the malfunction exists. When the malfunction indicator is illuminated, the system may not be able to detect or signal low tire pressure as intended. TPMS malfunctions may occur for a variety of reasons, including the installation of replacement or alternate tires or wheels on the vehicle that prevent the TPMS from functioning properly. Always check the TPMS malfunction telltale after replacing one or more tires or wheels on your vehicle to ensure that the replacement or alternate tires and wheels allow the TPMS to continue to function properly.

CAUTION!

The TPMS has been optimized for the original equipment tires and wheels. TPMS pressures and warning have been established for the tire size equipped on your vehicle. Undesirable system operation or sensor damage may result when using replacement equipment that is not of the same size, type, and/or style. Aftermarket wheels can cause sensor damage. Using aftermarket tire sealants may cause the Tire Pressure

(Continued)

CAUTION! *(Continued)*

Monitoring System (TPMS) sensor to become inoperable. After using an aftermarket tire sealant it is recommended that you take your vehicle to your authorized dealer to have your sensor function checked.

— Immobilizer Vehicle Theft Alarm Warning Light

This warning light will illuminate when the vehicle security alarm system has detected an attempt to break into the vehicle.

— Regenerative Brake System (RBS) Indicator Light

If the light turns on and remains on while driving, it suggests that there is a potential problem with the Regenerative Brake System (RBS) and the need for system service. See an authorized dealer as soon as possible.

Refer to "Regenerative Braking System (RBS)" in "Safety" for further information.

Yellow Indicator Lights

— EV System Malfunction Indicator Light

This indicator will illuminate when there is a malfunction in the Electric Vehicle (EV) System. If the EV System Malfunction Indicator light comes on while driving or charging see your authorized dealer as soon as possible.

— Icy Road Condition Indicator Light — If Equipped

This light will illuminate during an icy road condition.

— Rear Defrost Light

This indicator will illuminate when the rear window defroster is on. The rear window defroster automatically turns off after 20 minutes.

CAUTION!

Failure to follow these cautions can cause damage to the heating elements:

- **Use care when washing the inside of the rear window. Do not use abrasive window cleaners on the interior surface of the window. Use a soft cloth and a**

(Continued)

CAUTION! *(Continued)*

mild washing solution, wiping parallel to the heating elements. Labels can be peeled off after soaking with warm water.

- **Do not use scrapers, sharp instruments, or abrasive window cleaners on the interior surface of the window.**
- **Keep all objects a safe distance from the window.**

— Exterior Bulb Failure Indicator Light — If Equipped

This light will illuminate when there is a malfunction in one of the exterior bulbs.

Green Indicator Lights

— Cruise Control Set Indicator Light — If Equipped

This indicator light will illuminate when the cruise control is set to the desired speed. Refer to "Speed Control" in "Starting And Operating" for further information.

— Front Fog Indicator Light — If Equipped

This indicator light will illuminate when the front fog lights are on.

— Park/Headlight On Indicator Light

This indicator light will illuminate when the park lights or headlights are turned on.

— Plugged In Indicator Light

This indicator will illuminate when the vehicle is plugged in.

— Turn Signal Indicator Lights

When the left or right turn signal is activated, the turn signal indicator will flash independently and the corresponding exterior turn signal lamps will flash. Turn signals can be activated when the multifunction lever is moved down (left) or up (right).

NOTE:

- A continuous chime will sound if the vehicle is driven more than 1 mile (1.6 km) with either turn signal on.
- Check for an inoperative outside light bulb if either indicator flashes at a rapid rate.

White Indicator Lights

— Cruise Control ON Indicator Light

This indicator light will illuminate when the electronic speed control is ON, but a speed has not been set.

Blue Indicator Lights

— High Beam Indicator Light

This indicator light will illuminate to indicate that the high beam headlights are on. With the low beams activated, push the multifunction lever forward (toward the front of the vehicle) to turn on the high beams. Pull the multifunction lever rearward (toward the rear of the vehicle) to turn off the high beams. If the high beams are off, pull the lever toward you for a temporary high beam on, "flash to pass" scenario.

ONBOARD DIAGNOSTIC SYSTEM — OBD II

Onboard Diagnostic System (OBD II) Cybersecurity

Your vehicle is required to have an Onboard Diagnostic system (OBD II) and a connection port to allow access to information related to the performance of your emissions controls. Authorized service technicians may need to access this information to assist with the diagnosis and service of your vehicle and emissions system.

WARNING!

- **ONLY an authorized service technician should connect equipment to the OBD II connection port in order to read the VIN, diagnose, or service your vehicle.**
- **If unauthorized equipment is connected to the OBD II connection port, such as a driver-behavior tracking device, it may:**
  - **Be possible that vehicle systems, including safety related systems, could be impaired or a loss of vehicle control could occur that may result in an accident involving serious injury or death.**
  - **Access, or allow others to access, information stored in your vehicle systems, including personal information.**

For further information, refer to "Cybersecurity" in the "Multimedia" section.

SAFETY

CONTENTS

■ SAFETY FEATURES 102

□ Four-Wheel Anti-Lock Brake System (ABS) 102

□ Electronic Brake Control System 103

■ AUXILIARY DRIVING SYSTEMS 107

□ Tire Pressure Monitor System 107

■ OCCUPANT RESTRAINT SYSTEMS 112

□ Occupant Restraint Systems Features 112

□ Important Safety Precautions 112

□ Seat Belt Systems 114

□ Supplemental Restraint Systems (SRS) 122

□ Child Restraints 135

□ Transporting Pets 151

■ SAFETY TIPS 152

□ Transporting Passengers 152

□ Safety Checks You Should Make Inside The Vehicle 152

□ Periodic Safety Checks You Should Make Outside The Vehicle 154

SAFETY FEATURES

Four-Wheel Anti-Lock Brake System (ABS)

The Four-Wheel ABS is designed to aid the driver in maintaining vehicle control under adverse braking conditions. The system operates with a separate computer to modulate hydraulic pressure, to prevent wheel lock-up and to help avoid skidding on slippery surfaces.

The system's pump motor runs during an ABS stop to provide regulated hydraulic pressure. The pump motor makes a low humming noise during operation, which is normal.

The ABS includes an amber ABS Warning Light. When the light is illuminated, the ABS is not functioning. The system reverts to standard non-anti-lock brakes. Turning the ignition OFF and ON again may reset the ABS if the fault detected was only momentary.

WARNING!

- **The ABS contains sophisticated electronic equipment that may be susceptible to interference caused**

(Continued)

WARNING! ***(Continued)***

by improperly installed or high output radio transmitting equipment. This interference can cause possible loss of anti-lock braking capability. Installation of such equipment should be performed by qualified professionals.

- **Pumping of the Anti-Lock Brakes will diminish their effectiveness and may lead to a collision. Pumping makes the stopping distance longer. Just press firmly on your brake pedal when you need to slow down or stop.**
- **The ABS cannot prevent the natural laws of physics from acting on the vehicle, nor can it increase braking or steering efficiency beyond that afforded by the condition of the vehicle brakes and tires or the traction afforded.**
- **The ABS cannot prevent collisions, including those resulting from excessive speed in turns, following another vehicle too closely, or hydroplaning.**
- **The capabilities of an ABS equipped vehicle must never be exploited in a reckless or dangerous manner that could jeopardize the user's safety or the safety of others.**

When you are in a severe braking condition involving the use of the ABS, you will experience some pedal drop as the vehicle comes to a stop. This is the result of the system reverting to the base brake system.

Engagement of the ABS may be accompanied by a pulsing sensation. You may also hear a clicking noise. These occurrences are normal and indicate that the system is functioning properly.

Electronic Brake Control System

Your vehicle is equipped with a advanced electronic brake control system that includes the Brake Assist System (BAS), Traction Control System (TCS), and Electronic Stability Control (ESC). All systems work together to enhance vehicle stability and control in various driving conditions and are commonly referred to as ESC.

Brake Assist System (BAS)

The BAS is designed to optimize the vehicle's braking capability during emergency braking maneuvers. The system detects an emergency braking situation by sensing the rate and amount of brake application and then applies optimum pressure to the brakes. This can help reduce braking distances. The BAS complements the anti-lock brake system (ABS). Applying the brakes very quickly results in the best BAS assistance. To receive the benefit of the system, you must apply continuous braking pressure during the stopping sequence, (do not "pump" the brakes). Do not reduce brake pedal pressure unless braking is no longer desired. Once the brake pedal is released, the BAS is deactivated.

WARNING!

The Brake Assist System (BAS) cannot prevent the natural laws of physics from acting on the vehicle, nor can it increase the traction afforded by prevailing road conditions. BAS cannot prevent collisions, including those resulting from excessive speed in turns, driving on very slippery surfaces, or hydroplaning. The capabilities of a BAS-equipped vehicle must never be exploited in a reckless or dangerous manner, which could jeopardize the user's safety or the safety of others.

Traction Control System (TCS)

This system monitors the amount of wheel spin of each of the driven wheels. If wheel spin is detected, brake pressure is applied to the slipping wheel(s) and vehicle power is reduced to provide enhanced acceleration and stability. A feature of the TCS system, Brake Limited Differential

(BLD), functions similar to a limited slip differential and controls the wheel spin across a driven axle. If one wheel on a driven axle is spinning faster than the other, the system will apply the brake of the spinning wheel. This will allow more torque to be applied to the wheel that is not spinning. This feature remains active even if TCS and ESC are in the Partial Off mode. Refer to "Electronic Stability Control (ESC)" in this section for further information.

Electronic Stability Control (ESC)

This system enhances directional control and stability of the vehicle under various driving conditions. ESC corrects for oversteering or understeering of the vehicle by applying the brake of the appropriate wheel to assist in counteracting the oversteering or understeering condition. Vehicle power may also be reduced to help the vehicle maintain the desired path. ESC uses sensors in the vehicle to determine the vehicle path intended by the driver and compares it to the actual path of the vehicle. When the actual path does not match the intended path, ESC applies the brake of the appropriate wheel to assist in counteracting the oversteer or understeer condition.

- Oversteer - when the vehicle is turning more than appropriate for the steering wheel position.
- Understeer - when the vehicle is turning less than appropriate for the steering wheel position.

NOTE: The ESC Off switch is located on the instrument panel.

WARNING!

- **The Electronic Stability Control (ESC) cannot prevent the natural laws of physics from acting on the vehicle, nor can it increase the traction afforded by prevailing road conditions. ESC cannot prevent all accidents, including those resulting from excessive speed in turns, driving on very slippery surfaces, or hydroplaning. ESC also cannot prevent collisions resulting from loss of vehicle control due to inappropriate driver input for the conditions. Only a safe, attentive, and skillful driver can prevent accidents. The capabilities of an ESC equipped vehicle must never be exploited in a reckless or dangerous manner which could jeopardize the user's safety or the safety of others.**
- **Vehicle modifications, or failure to properly maintain your vehicle, may change the handling characteristics of your vehicle, and may negatively affect**

(Continued)

WARNING! *(Continued)*

the performance of the ESC system. Changes to the steering system, suspension, braking system, tire type and size or wheel size may adversely affect ESC performance. Improperly inflated and unevenly worn tires may also degrade ESC performance. Any vehicle modification or poor vehicle maintenance that reduces the effectiveness of the ESC system can increase the risk of loss of vehicle control, vehicle rollover, personal injury and death.

ESC Operating Modes

The ESC system has two available operating modes.

Full On

This is the normal operating mode for ESC. Whenever the vehicle is started, the ESC system will be in On mode. This mode should be used for most driving situations. ESC should only be turned to Partial Off for specific reasons as noted below.

Partial Off

This mode is entered by momentarily pushing the ESC Off switch. This mode is intended to be used if the vehicle is in deep snow, sand or gravel conditions and more wheel spin than ESC would normally allow is required to gain traction.

To turn ESC on again, momentarily pushing the switch again. This will restore the normal ESC On mode of operation.

NOTE: To improve the vehicle's traction when driving with snow chains, or starting off in deep snow, sand or gravel, it may be desirable to switch to the Partial Off mode by pushing the switch. Once the situation requiring ESC to be switched to the Partial Off mode is overcome, turn ESC back on by momentarily pushing the switch. This may be done while the vehicle is in motion.

WARNING!

When in "Partial Off" mode, the TCS functionality of ESC, (except for the limited slip feature described in the TCS section), has been disabled and the "ESC Off Indicator Light" will be illuminated. When in "Partial Off" mode, the motor power reduction feature of TCS is disabled, and the enhanced vehicle stability offered by the ESC system is reduced.

ESC Activation/Malfunction Indicator Light And ESC OFF Indicator Light

ESC

The ESC Activation/Malfunction Indicator Light in the instrument cluster will come on when the ignition switch is turned to the MAR (ACC/ON/RUN) position for four seconds. If the ESC Activation/Malfunction Indicator Light comes on continuously with the vehicle operating running, a malfunction has been detected in the ESC system. If this light remains on after several ignition cycles, and the vehicle has been driven several miles (kilometers) at speeds greater than 30 mph (48 km/h), see your authorized dealer as soon as possible to have the problem diagnosed and corrected.

The ESC Activation/Malfunction Indicator Light (located in the instrument cluster) starts to flash as soon as the tires lose traction and the ESC system becomes active. The ESC Activation/Malfunction Indicator Light also flashes when TCS is active. If the ESC Activation/Malfunction Indicator Light begins to flash during acceleration, ease up on the accelerator and apply as little throttle as possible. Be sure to adapt your speed and driving to the prevailing road conditions.

NOTE:

- The ESC Activation/Malfunction Indicator Light and the ESC OFF Indicator Light come on momentarily each time the ignition switch is turned ON.
- Each time the ignition is turned ON, the ESC system will be ON even if it was turned off previously.

ESC OFF

The ESC OFF Indicator Light indicates the Electronic Stability Control (ESC) is partially off.

Regenerative Braking System (RBS)

RBS

Your 500e has a Regenerative Braking System (RBS). The RBS reduces the high voltage battery consumption of the vehicle, particularly in stop-and-go city traffic. The electric motors which propel the vehicle forward can operate as generators when braking. The RBS recharges the high voltage battery under certain braking conditions by recapturing energy that would otherwise be lost while braking. The electric power that is generated goes back into the high voltage battery for later use, for example when acceleration is desired.

The RBS uses conventional hydraulic friction brakes, regenerative braking, or a combination to slow the vehicle. If the system detects slippery conditions while braking, ONLY friction is used to slow the vehicle. The RBS can result in extended life of the hydraulic service brakes; however, all inspection, scheduled maintenance, and service intervals for the vehicle service brakes must be followed.

AUXILIARY DRIVING SYSTEMS

Tire Pressure Monitor System

The Tire Pressure Monitor System (TPMS) will warn the driver of a low tire pressure based on the vehicle recommended cold placard pressure.

The tire pressure will vary with temperature by about 1psi (7 kPa) for every 12°F (6.5°C). This means that when the outside temperature decreases, the tire pressure will decrease. Tire pressure should always be set based on cold inflation tire pressure. This is defined as the tire pressure after the vehicle has not been driven for at least three hours, or driven less than 1 mile (1.6 km) after a three hour period. The cold tire inflation pressure must not exceed the maximum inflation pressure molded into the tire sidewall. Refer to "Tires – General Information" in "Servicing And Maintenance" for information on how to properly inflate the vehicle's tires. The tire pressure will also increase as the vehicle is driven. This is normal and there should be no adjustment for this increased pressure.

The TPMS will warn the driver of a low tire pressure if the tire pressure falls below the low-pressure warning limit for any reason, including low temperature effects and natural pressure loss through the tire.

The TPMS will continue to warn the driver of low tire pressure as long as the condition exists, and will not turn off until the tire pressure is at or above the recommended cold placard pressure. Once the low tire pressure warning (Tire Pressure Monitoring System Warning Light) illuminates, you must increase the tire pressure to the recommended cold placard pressure in order for the Tire Pressure Monitoring System Warning Light to turn off. The system will automatically update and the Tire Pressure Monitoring System Warning Light will turn off once the system receives the updated tire pressures. The vehicle may need to be driven for up to 20 minutes above 15 mph (24 km/h) in order for the TPMS to receive this information.

For example, your vehicle may have a recommended cold (parked for more than three hours) placard pressure of 33 psi (227 kPa). If the ambient temperature is 68°F (20°C) and

the measured tire pressure is 28 psi (193 kPa), a temperature drop to 20°F (-7°C) will decrease the tire pressure to approximately 24 psi (165 kPa). This tire pressure is low enough to turn ON the "Tire Pressure Monitoring System Warning Light." Driving the vehicle may cause the tire pressure to rise to approximately 28 psi (193 kPa), but the Tire Pressure Monitoring System Warning Light will still be on. In this situation, the Tire Pressure Monitoring System Warning Light will turn off only after the tires are inflated to the vehicle's recommended cold placard pressure value.

CAUTION!

- **The TPMS has been optimized for the original equipment tires and wheels. TPMS pressures and warnings have been established for the tire size equipped on your vehicle. Undesirable system operation or sensor damage may result when using replacement equipment that is not of the same size, type, and/or style. The TPM sensor is not designed for use on aftermarket wheels and may contribute to a poor overall system performance or sensor damage. Customers are encouraged to use OEM wheels to assure proper TPM feature operation.**

(Continued)

CAUTION! *(Continued)*

- **Using aftermarket tire sealants may cause the Tire Pressure Monitoring System (TPMS) sensor to become inoperable. After using an aftermarket tire sealant it is recommended that you take your vehicle to an authorized dealership to have your sensor function checked.**
- **After inspecting or adjusting the tire pressure, always reinstall the valve stem cap. This will prevent moisture and dirt from entering the valve stem, which could damage the Tire Pressure Monitoring Sensor.**

NOTE:

- The TPMS is not intended to replace normal tire care and maintenance, or to provide warning of a tire failure or condition.
- The TPMS should not be used as a tire pressure gauge while adjusting your tire pressure.
- Driving on a significantly under-inflated tire causes the tire to overheat and can lead to tire failure.

- Under-inflation also reduces the high voltage battery range and tire tread life, and may affect the vehicle's handling and stopping ability.
- It is particularly important for you to check the tire pressure in all of the tires on your vehicle monthly and to maintain the proper pressure.
- The TPMS is not a substitute for proper tire maintenance, and it is the driver's responsibility to maintain correct tire pressure using an accurate tire pressure gauge, even if under-inflation has not reached the level to trigger illumination of the Tire Pressure Monitoring System Warning Light.
- Seasonal temperature changes will affect tire pressure, and the TPMS will monitor the actual tire pressure in the tire.

TPM System

The Tire Pressure Monitor System (TPMS) uses wireless technology with wheel rim mounted electronic sensors to monitor tire pressure levels. Sensors, mounted to each wheel as part of the valve stem, transmit tire pressure readings to the receiver module.

The TPMS consists of the following components:

- Receiver module
- Four Tire Pressure Monitoring Sensors
- Various Tire Pressure Monitoring System messages, which display in the instrument cluster
- Tire Pressure Monitoring System Warning Light

Tire Pressure Monitoring Low Pressure Warnings

The Tire Pressure Monitoring System Warning Light will illuminate in the instrument cluster and a chime will sound when tire pressure is low in one or more of the four active road tires. In addition, the instrument cluster will display a low pressure graphic showing the low tire pressure tire highlighted in a different color.

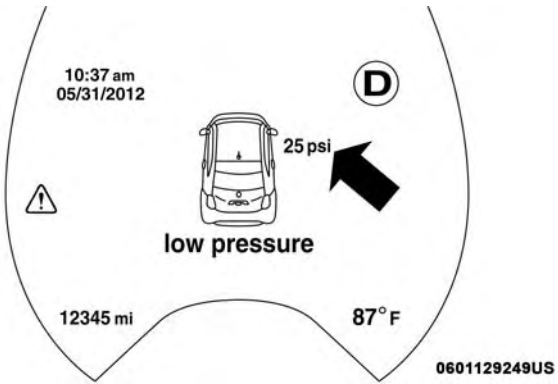

Low Tire Indicator

Should this occur, you should stop as soon as possible and inflate the tires with low pressure to the vehicle's recommended cold placard pressure value. Once the system receives the updated tire pressures, the system will automatically update and the Tire Pressure Monitoring System Warning Light will turn off. The vehicle may need to be driven for up to 20 minutes above 15 mph (24 km/h) in order for the TPMS to receive this information.

TPMS Warning

When a system fault is detected, the Tire Pressure Monitoring System Warning Light will flash on and off for 75 seconds and then remain on solid. The system fault will sound a chime and also display a "Service Tire Pressure Monitoring System" message in the instrument cluster for approximately five seconds.

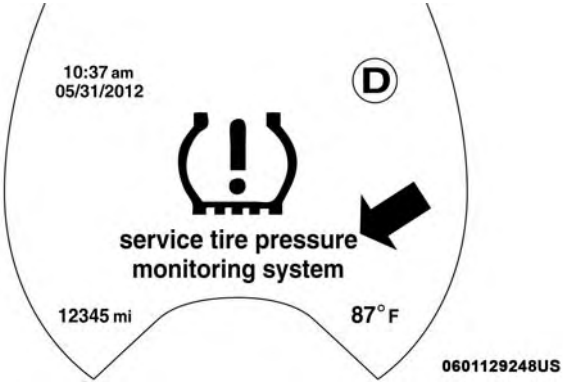

Service TPM System Message

If the ignition switch is cycled, this sequence will repeat, providing the system fault still exists. If the system fault no longer exists, the Tire Pressure Monitoring System Warning Light will no longer flash, and the "Service TPM System" message will no longer display.

A system fault can occur due to any of the following:

1. Signal interference due to electronic devices or driving next to facilities emitting the same radio frequencies as the TPM sensors.
2. Installing aftermarket window tinting that contains materials that may block radio wave signals.
3. Accumulation of snow or ice around the wheels or wheel housings.
4. Using tire chains on the vehicle.
5. Using wheels/tires not equipped with TPM sensors.

NOTE:

- The TPMS will not monitor the pressure in a replacement tire installed without a tire pressure sensor.
- If you install a replacement tire in place of a road tire that has a pressure below the low-pressure warning limit, upon the next ignition switch cycle, the Tire Pressure Monitoring System Warning Light will remain on and a chime will sound. In addition, the highlighted graphic in the instrument cluster will still display a low pressure text message and a pressure value in a different color.
- After driving the vehicle for up to 20 minutes above 15 mph (24 km/h), the Tire Pressure Monitoring System Warning Light will flash on and off for 75 seconds and then remain on solid. In addition, the instrument cluster will display a "Service Tire Pressure Monitoring System" message.

- For each subsequent ignition switch cycle, a chime will sound, the Tire Pressure Monitoring System Warning Light will flash on and off for 75 seconds and then remain on solid, and the instrument cluster will display a "Service TPM System" message.

Once you repair or replace the original road tire and reinstall it, the TPMS will update automatically. In addition, the Tire Pressure Monitoring System Warning Light will turn off, as long as no tire pressure is below the low-pressure warning limit in any of the four active road tires. The vehicle may need to be driven for up to 20 minutes above 15 mph (24 km/h) in order for the TPMS to receive this information.

General Information

This device complies with Part 15 of the FCC rules and RSS 210 of Industry Canada. Operation is subject to the following conditions:

1. This device may not cause harmful interference.
2. This device must accept any interference received, including interference that may cause undesired operation.

NOTE: Changes or modifications not expressly approved by the party responsible for compliance could void the user's authority to operate the equipment.

OCCUPANT RESTRAINT SYSTEMS

Some of the most important safety features in your vehicle are the restraint systems:

Occupant Restraint Systems Features

- Seat Belt Systems
- Supplemental Restraint Systems (SRS) Air Bags
- Child Restraints

Some of the safety features described in this section may be standard equipment on some models, or may be optional equipment on others. If you are not sure, ask an authorized dealer.

Important Safety Precautions

Please pay close attention to the information in this section. It tells you how to use your restraint system properly, to keep you and your passengers as safe as possible.

Here are some simple steps you can take to minimize the risk of harm from a deploying air bag:

1. Children 12 years old and under should always ride buckled up in the rear seat of a vehicle with a rear seat.
2. A child who is not big enough to wear the vehicle seat belt properly (Refer to "Child Restraints" in this section for further information) must be secured in the appropriate child restraint or belt-positioning booster seat in a rear seating position.
3. If a child from 2 to 12 years old (not in a rear-facing child restraint) must ride in the front passenger seat, move the seat as far back as possible and use the proper child restraint (Refer to "Child Restraints" in this section for further information).
4. Never allow children to slide the shoulder belt behind them or under their arm.
5. You should read the instructions provided with your child restraint to make sure that you are using it properly.
6. All occupants should always wear their lap and shoulder belts properly.
7. The driver and front passenger seats should be moved back as far as practical to allow the front air bags room to inflate.
8. Do not lean against the door or window. If your vehicle has side air bags, and deployment occurs, the side air bags will inflate forcefully into the space between occupants and the door and occupants could be injured.
9. If the air bag system in this vehicle needs to be modified to accommodate a disabled person, refer to the "Customer Assistance" section for customer service contact information.

WARNING!

- **Never place a rear-facing child restraint in front of an air bag. A deploying passenger front air bag can cause death or serious injury to a child 12 years or younger, including a child in a rear-facing child restraint.**
- **Never install a rear-facing child restraint in the front seat of a vehicle. Only use a rear-facing child restraint in the rear seat. If the vehicle does not have a rear seat, do not transport a rear-facing child restraint in that vehicle.**

Seat Belt Systems

Buckle up even though you are an excellent driver, even on short trips. Someone on the road may be a poor driver and could cause a collision that includes you. This can happen far away from home or on your own street.

Research has shown that seat belts save lives, and they can reduce the seriousness of injuries in a collision. Some of the worst injuries happen when people are thrown from the vehicle. Seat belts reduce the possibility of ejection and the risk of injury caused by striking the inside of the vehicle. Everyone in a motor vehicle should be belted at all times.

Enhanced Seat Belt Use Reminder System (BeltAlert)

Driver and Passenger BeltAlert (if equipped)

BeltAlert is a feature intended to remind the driver and outboard front seat passenger (if equipped with outboard front passenger seat BeltAlert) to buckle their seat belts. The Belt Alert feature is active whenever the ignition switch is in the START or ON/RUN position.

Initial Indication

If the driver is unbuckled when the ignition switch is first in the START or ON/RUN position, a chime will signal for a few seconds. If the driver or outboard front seat passenger (if equipped with outboard front passenger seat BeltAlert) is unbuckled when the ignition switch is first in the START or ON/RUN position the Seat Belt Reminder Light will turn on and remain on until both outboard front seat belts are buckled. The outboard front passenger seat BeltAlert is not active when an outboard front passenger seat is unoccupied.

BeltAlert Warning Sequence

The BeltAlert warning sequence is activated when the vehicle is moving above a specified vehicle speed range and the driver or outboard front seat passenger is unbuckled (if equipped with outboard front passenger seat BeltAlert) (the outboard front passenger seat BeltAlert is not active when the outboard front passenger seat is unoccupied). The BeltAlert warning sequence starts by blinking the Seat Belt Reminder Light and sounding an intermittent chime. Once the BeltAlert warning sequence has completed, the Seat Belt Reminder Light will remain on until the seat belts are buckled. The BeltAlert warning sequence may repeat based on vehicle speed until the driver and occupied outboard front seat passenger seat belts are buckled. The driver should instruct all occupants to buckle their seat belts.

Change of Status

If the driver or outboard front seat passenger (if equipped with outboard front passenger seat BeltAlert) unbuckles their seat belt while the vehicle is traveling, the BeltAlert warning sequence will begin until the seat belts are buckled again.

The outboard front passenger seat BeltAlert is not active when the outboard front passenger seat is unoccupied. BeltAlert may be triggered when an animal or other items are placed on the outboard front passenger seat or when the seat is folded flat (if equipped). It is recommended that pets be restrained in the rear seat (if equipped) in pet harnesses or pet carriers that are secured by seat belts, and cargo is properly stowed.

BeltAlert can be activated or deactivated by an authorized dealer. FCA US LLC does not recommend deactivating BeltAlert.

NOTE: If BeltAlert has been deactivated and the driver or outboard front seat passenger (if equipped with outboard front passenger seat BeltAlert) is unbuckled the Seat Belt Reminder Light will turn on and remain on until the driver and outboard front seat passenger seat belts are buckled.

Lap/Shoulder Belts

All seating positions in your vehicle are equipped with lap/shoulder belts.

The seat belt webbing retractor will lock only during very sudden stops or collisions. This feature allows the shoulder part of the seat belt to move freely with you under normal conditions. However, in a collision the seat belt will lock and reduce your risk of striking the inside of the vehicle or being thrown out of the vehicle.

WARNING!

- **Relying on the air bags alone could lead to more severe injuries in a collision. The air bags work with your seat belt to restrain you properly. In some collisions, the air bags won't deploy at all. Always wear your seat belt even though you have air bags.**
- **In a collision, you and your passengers can suffer much greater injuries if you are not properly buckled up. You can strike the interior of your vehicle or other passengers, or you can be thrown out of the vehicle. Always be sure you and others in your vehicle are buckled up properly.**

(Continued)

WARNING! *(Continued)*

- It is dangerous to ride in a cargo area, inside or outside of a vehicle. In a collision, people riding in these areas are more likely to be seriously injured or killed.
- Do not allow people to ride in any area of your vehicle that is not equipped with seats and seat belts.
- Be sure everyone in your vehicle is in a seat and using a seat belt properly. Occupants, including the driver, should always wear their seat belts whether or not an air bag is also provided at their seating position to minimize the risk of severe injury or death in the event of a crash.
- Wearing your seat belt incorrectly could make your injuries in a collision much worse. You might suffer internal injuries, or you could even slide out of the seat belt. Follow these instructions to wear your seat belt safely and to keep your passengers safe, too.
- Two people should never be belted into a single seat belt. People belted together can crash into one another in a collision, hurting one another badly. Never use a lap/shoulder belt or a lap belt for more than one person, no matter what their size.

WARNING!

- A lap belt worn too high can increase the risk of injury in a collision. The seat belt forces won't be at the strong hip and pelvic bones, but across your abdomen. Always wear the lap part of your seat belt as low as possible and keep it snug.
- A twisted seat belt may not protect you properly. In a collision, it could even cut into you. Be sure the seat belt is flat against your body, without twists. If you can't straighten a seat belt in your vehicle, take it to an authorized dealer immediately and have it fixed.
- A seat belt that is buckled into the wrong buckle will not protect you properly. The lap portion could ride too high on your body, possibly causing internal injuries. Always buckle your seat belt into the buckle nearest you.
- A seat belt that is too loose will not protect you properly. In a sudden stop, you could move too far forward, increasing the possibility of injury. Wear your seat belt snugly.
- A seat belt that is worn under your arm is dangerous. Your body could strike the inside surfaces of the vehicle in a collision, increasing head and neck

(Continued)

WARNING! ***(Continued)***

injury. A seat belt worn under the arm can cause internal injuries. Ribs aren't as strong as shoulder bones. Wear the seat belt over your shoulder so that your strongest bones will take the force in a collision.

- **A shoulder belt placed behind you will not protect you from injury during a collision. You are more likely to hit your head in a collision if you do not wear your shoulder belt. The lap and shoulder belt are meant to be used together.**
- **A frayed or torn seat belt could rip apart in a collision and leave you with no protection. Inspect the seat belt system periodically, checking for cuts, frays, or loose parts. Damaged parts must be replaced immediately. Do not disassemble or modify the seat belt system. Seat belt assemblies must be replaced after a collision.**

Lap/Shoulder Belt Operating Instructions

1. Enter the vehicle and close the door. Sit back and adjust the seat.
2. The seat belt latch plate is above the back of the front seat, and next to your arm in the rear seat (for vehicles equipped with a rear seat). Grasp the latch plate and pull out the seat belt. Slide the latch plate up the webbing as far as necessary to allow the seat belt to go around your lap.

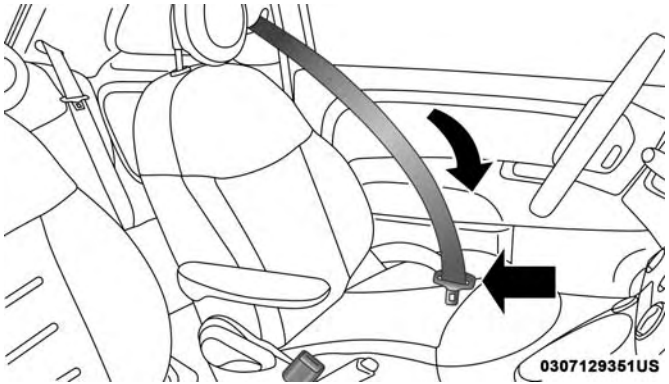

Pulling Out The Latch Plate

3. When the seat belt is long enough to fit, insert the latch plate into the buckle until you hear a “click.”

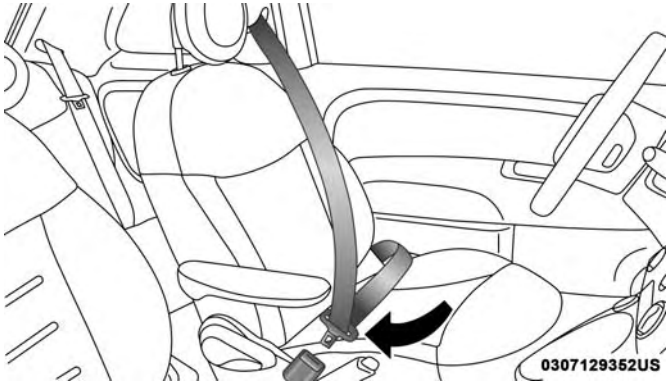

Inserting Latch Plate Into Buckle

4. Position the lap belt so that it is snug and lies low across your hips, below your abdomen. To remove slack in the lap belt portion, pull up on the shoulder belt. To loosen the lap belt if it is too tight, tilt the latch plate and pull on the lap belt. A snug seat belt reduces the risk of sliding under the seat belt in a collision.

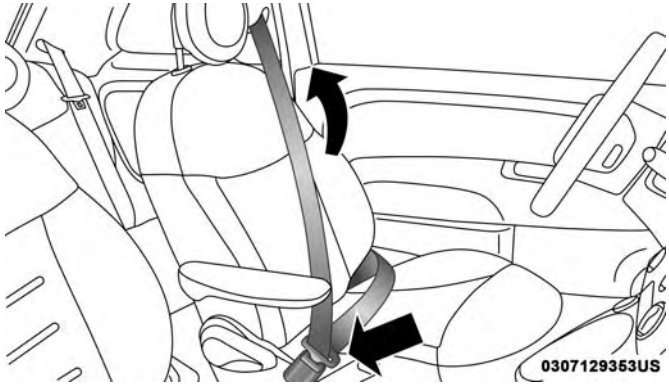

Positioning The Lap Belt

5. Position the shoulder belt across the shoulder and chest with minimal, if any slack so that it is comfortable and not resting on your neck. The retractor will withdraw any slack in the shoulder belt.

6. To release the seat belt, push the red button on the buckle. The seat belt will automatically retract to its stowed position. If necessary, slide the latch plate down the webbing to allow the seat belt to retract fully.

Lap/Shoulder Belt Untwisting Procedure

Use the following procedure to untwist a twisted lap/shoulder belt.

1. Position the latch plate as close as possible to the anchor point.
2. At about 6 to 12 inches (15 to 30 cm) above the latch plate, grasp and twist the seat belt webbing 180 degrees to create a fold that begins immediately above the latch plate.
3. Slide the latch plate upward over the folded webbing. The folded webbing must enter the slot at the top of the latch plate.
4. Continue to slide the latch plate up until it clears the folded webbing and the seat belt is no longer twisted.

Seat Belt Extender

If a seat belt is not long enough to fit properly, even when the webbing is fully extended and the adjustable upper shoulder belt anchorage (if equipped) is in its lowest position, an authorized dealer can provide you with a Seat Belt Extender. The Seat Belt Extender should be used only if the existing seat belt is not long enough. When the Seat Belt Extender is not required for a different occupant, it must be removed.

WARNING!

- **ONLY use a Seat Belt Extender if it is physically required in order to properly fit the original seat belt system. DO NOT USE the Seat Belt Extender if, when worn, the distance between the front edge of the Seat Belt Extender buckle and the center of the occupant's body is LESS than 6 inches.**
- **Using a Seat Belt Extender when not needed can increase the risk of serious injury or death in a collision. Only use the Seat Belt Extender when the lap belt is not long enough and only use in the recommended seating positions. Remove and store the Seat Belt Extender when not needed.**

Seat Belts And Pregnant Women

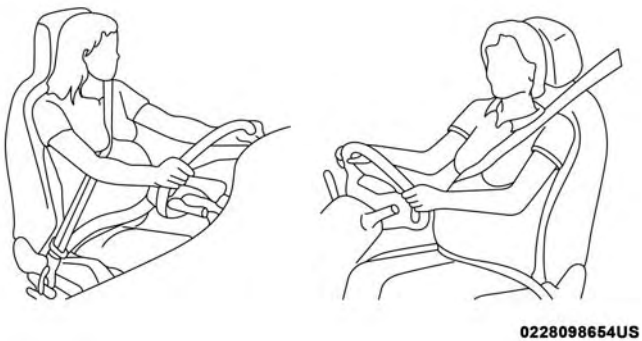

Pregnant Women And Seat Belts

Seat belts must be worn by all occupants including pregnant women: the risk of injury in the event of an accident is reduced for the mother and the unborn child if they are wearing a seat belt.

Position the lap belt snug and low below the abdomen and across the strong bones of the hips. Place the shoulder belt across the chest and away from the neck. Never place the shoulder belt behind the back or under the arm.

Seat Belt Pretensioner

The front outboard seat belt system is equipped with pretensioning devices that are designed to remove slack from the seat belt in the event of a collision. These devices may improve the performance of the seat belt by removing slack from the seat belt early in a collision. Pretensioners work for all size occupants, including those in child restraints.

NOTE: These devices are not a substitute for proper seat belt placement by the occupant. The seat belt still must be worn snugly and positioned properly.

The pretensioners are triggered by the Occupant Restraint Controller (ORC). Like the air bags, the pretensioners are single use items. A deployed pretensioner or a deployed air bag must be replaced immediately.

Energy Management Feature

The front outboard seat belt system is equipped with an Energy Management feature that may help further reduce the risk of injury in the event of a collision. The seat belt system has a retractor assembly that is designed to release webbing in a controlled manner.

Switchable Automatic Locking Retractor (ALR)

The seat belts in the passenger seating positions are equipped with a Switchable Automatic Locking Retractor (ALR) which is used to secure a child restraint system. For additional information, refer to "Installing Child Restraints Using The Vehicle Seat Belt" under the "Child Restraints" section of this manual.

The figure below illustrates the locking feature for each seating position.

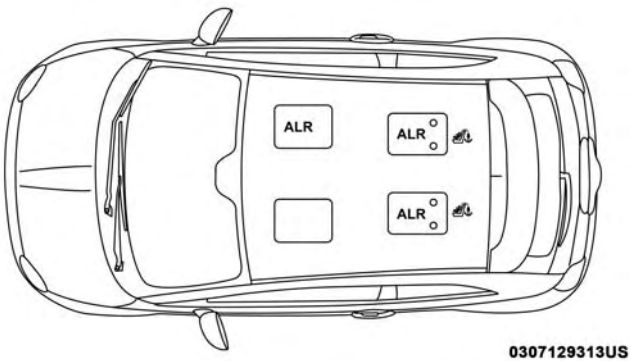

ALR — Switchable Automatic Locking Retractor

If the passenger seating position is equipped with an ALR and is being used for normal usage, only pull the seat belt webbing out far enough to comfortably wrap around the occupant's mid-section so as to not activate the ALR. If the ALR is activated, you will hear a clicking sound as the seat belt retracts. Allow the webbing to retract completely in this case and then carefully pull out only the amount of webbing necessary to comfortably wrap around the occupant's mid-section. Slide the latch plate into the buckle until you hear a "click."

In Automatic Locking Mode, the shoulder belt is automatically pre-locked. The seat belt will still retract to remove any slack in the shoulder belt. Use the Automatic Locking Mode anytime a child restraint is installed in a seating position that has a seat belt with this feature. Children 12 years old and under should always be properly restrained in the rear seat of a vehicle with a rear seat.

WARNING!

- **Never place a rear-facing child restraint in front of an air bag. A deploying passenger front air bag can cause death or serious injury to a child 12 years or younger, including a child in a rear-facing child restraint.**
- **Never install a rear-facing child restraint in the front seat of a vehicle. Only use a rear-facing child restraint in the rear seat. If the vehicle does not have a rear seat, do not transport a rear-facing child restraint in that vehicle.**

How To Engage The Automatic Locking Mode

1. Buckle the combination lap and shoulder belt.
2. Grasp the shoulder portion and pull downward until the entire seat belt is extracted.
3. Allow the seat belt to retract. As the seat belt retracts, you will hear a clicking sound. This indicates the seat belt is now in the Automatic Locking Mode.

How To Disengage The Automatic Locking Mode

Unbuckle the combination lap/shoulder belt and allow it to retract completely to disengage the Automatic Locking Mode and activate the vehicle sensitive (emergency) locking mode.

WARNING!

- **The seat belt assembly must be replaced if the switchable Automatic Locking Retractor (ALR) feature or any other seat belt function is not working properly when checked according to the procedures in the Service Manual.**
- **Failure to replace the seat belt assembly could increase the risk of injury in collisions.**
- **Do not use the Automatic Locking Mode to restrain occupants who are wearing the seat belt or children who are using booster seats. The locked mode is only used to install rear-facing or forward-facing child restraints that have a harness for restraining the child.**

Supplemental Restraint Systems (SRS)

Some of the safety features described in this section may be standard equipment on some models, or may be optional equipment on others. If you are not sure, ask an authorized dealer.

The air bag system must be ready to protect you in a collision. The Occupant Restraint Controller (ORC) monitors the internal circuits and interconnecting wiring associated with the electrical Air Bag System Components. Your vehicle may be equipped with the following Air Bag System Components:

Air Bag System Components

- Occupant Restraint Controller (ORC)
- Air Bag Warning Light
- Steering Wheel and Column
- Instrument Panel
- Knee Impact Bolsters
- Driver and Front Passenger Air Bags
- Seat Belt Buckle Switch
- Supplemental Side Air Bags
- Supplemental Knee Air Bags
- Front and Side Impact Sensors
- Seat Belt Pretensioners
- Seat Track Position Sensors

Air Bag Warning Light

The ORC monitors the readiness of the electronic parts of the air bag system whenever the ignition switch is in the AVV/START or MAR/ACC/ON/RUN position. If the ignition switch is in the STOP/OFF/LOCK position the air bag system is not on and the air bags will not inflate.

The ORC contains a backup power supply system that may deploy the air bag system even if the battery loses power or it becomes disconnected prior to deployment.

The ORC turns on the Air Bag Warning Light in the instrument panel for approximately four to eight seconds for a self-check when the ignition switch is in the MAR/ACC/ON/RUN position. After the self-check, the Air Bag Warning Light will turn off. If the ORC detects a malfunction in any part of the system, it turns on the Air Bag Warning Light, either momentarily or continuously. A single chime will sound to alert you if the light comes on again after initial startup.

The ORC also includes diagnostics that will illuminate the instrument panel Air Bag Warning Light if a malfunction is detected that could affect the air bag system. The diagnostics also record the nature of the malfunction. While the air

bag system is designed to be maintenance free, if any of the following occurs, have an authorized dealer service the air bag system immediately.

- The Air Bag Warning Light does not come on during the four to eight seconds when the ignition switch is first in the MAR/ACC/ON/RUN position.
- The Air Bag Warning Light remains on after the four to eight-second interval.
- The Air Bag Warning Light comes on intermittently or remains on while driving.

NOTE: If the speedometer, tachometer, or any engine related gauges are not working, the Occupant Restraint Controller (ORC) may also be disabled. In this condition the air bags may not be ready to inflate for your protection. Have an authorized dealer service the air bag system immediately.

WARNING!

Ignoring the Air Bag Warning Light in your instrument panel could mean you won't have the air bag system to protect you in a collision. If the light does not come on

(Continued)

WARNING! *(Continued)*

as a bulb check when the ignition is first turned on, stays on after you start the vehicle, or if it comes on as you drive, have an authorized dealer service the air bag system immediately.

Front Air Bags

This vehicle has front air bags and lap/shoulder belts for both the driver and front passenger. The front air bags are a supplement to the seat belt restraint systems. The driver front air bag is mounted in the center of the steering wheel. The passenger front air bag is mounted in the instrument panel, above the glove compartment. The words "SRS AIRBAG" or "AIRBAG" are embossed on the air bag covers.

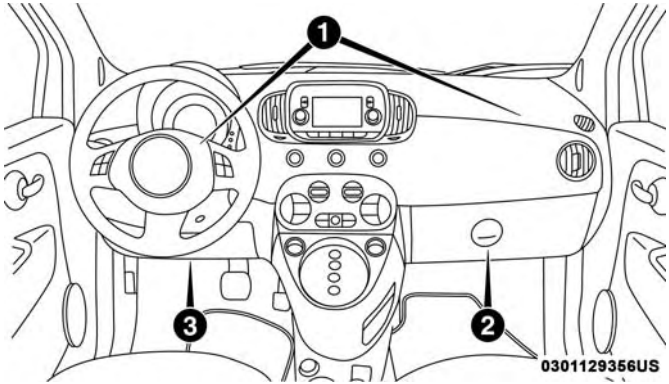

Front Air Bag/Knee Impact Bolster Locations

1 — Driver And Passenger Front Air Bags
2 — Passenger Knee Impact Bolster
3 — Driver Knee Impact Bolster/Supplemental Driver Knee Air Bag

WARNING!

- **Being too close to the steering wheel or instrument panel during front air bag deployment could cause serious injury, including death. Air bags need room to inflate. Sit back, comfortably extending your arms to reach the steering wheel or instrument panel.**

(Continued)

WARNING! *(Continued)*

- **Never place a rear-facing child restraint in front of an air bag. A deploying passenger front air bag can cause death or serious injury to a child 12 years or younger, including a child in a rear-facing child restraint.**
- **Never install a rear-facing child restraint in the front seat of a vehicle. Only use a rear-facing child restraint in the rear seat. If the vehicle does not have a rear seat, do not transport a rear-facing child restraint in that vehicle.**

Driver And Passenger Front Air Bag Features

The Advanced Front Air Bag system has multistage driver and front passenger air bags. This system provides output appropriate to the severity and type of collision as determined by the Occupant Restraint Controller (ORC), which may receive information from the front impact sensors (if equipped) or other system components.

The first stage inflator is triggered immediately during an impact that requires air bag deployment. A low energy output is used in less severe collisions. A higher energy output is used for more severe collisions.

This vehicle may be equipped with a driver and/or front passenger seat belt buckle switch that detects whether the driver or front passenger seat belt is buckled. The seat belt buckle switch may adjust the inflation rate of the Advanced Front Air Bags.

This vehicle may be equipped with driver and/or front passenger seat track position sensors that may adjust the inflation rate of the Advanced Front Air Bags based upon seat position.

WARNING!

- **No objects should be placed over or near the air bag on the instrument panel or steering wheel because any such objects could cause harm if the vehicle is in a collision severe enough to cause the air bag to inflate.**
- **Do not put anything on or around the air bag covers or attempt to open them manually. You may damage the air bags and you could be injured because the air bags may no longer be functional. The protective covers for the air bag cushions are designed to open only when the air bags are inflating.**

(Continued)

WARNING! ***(Continued)***

- **Relying on the air bags alone could lead to more severe injuries in a collision. The air bags work with your seat belt to restrain you properly. In some collisions, air bags won't deploy at all. Always wear your seat belts even though you have air bags.**

Front Air Bag Operation

Front Air Bags are designed to provide additional protection by supplementing the seat belts. Front air bags are not expected to reduce the risk of injury in rear, side, or rollover collisions. The front air bags will not deploy in all frontal collisions, including some that may produce substantial vehicle damage — for example, some pole collisions, truck underrides, and angle offset collisions.

On the other hand, depending on the type and location of impact, front air bags may deploy in crashes with little vehicle front-end damage but that produce a severe initial deceleration.

Because air bag sensors measure vehicle deceleration over time, vehicle speed and damage by themselves are not good indicators of whether or not an air bag should have deployed.

Seat belts are necessary for your protection in all collisions, and also are needed to help keep you in position, away from an inflating air bag.

When the ORC detects a collision requiring the front air bags, it signals the inflator units. A large quantity of non-toxic gas is generated to inflate the front air bags.

The steering wheel hub trim cover and the upper passenger side of the instrument panel separate and fold out of the way as the air bags inflate to their full size. The front air bags fully inflate in less time than it takes to blink your eyes. The front air bags then quickly deflate while helping to restrain the driver and front passenger.

Knee Impact Bolsters

The Knee Impact Bolsters help protect the knees of the driver and front passenger, and position the front occupants for improved interaction with the front air bags.

WARNING!

- **Do not drill, cut, or tamper with the knee impact bolsters in any way.**
- **Do not mount any accessories to the knee impact bolsters such as alarm lights, stereos, citizen band radios, etc.**

Supplemental Driver Knee Air Bag

This vehicle is equipped with a Supplemental Driver Knee Air Bag mounted in the instrument panel below the steering column. The Supplemental Driver Knee Air Bag provides enhanced protection during a frontal impact by working together with the seat belts, pretensioners, and front air bags.

Supplemental Side Air Bags

Supplemental Seat-Mounted Side Air Bags (SABs)

This vehicle is equipped with Supplemental Seat-Mounted Side Air Bags (SABs).

Supplemental Seat-Mounted Side Air Bags (SABs) are located in the outboard side of the front seats. The SABs are marked with “SRS AIRBAG” or “AIRBAG” on a label or on the seat trim on the outboard side of the seats.

The SABs may help to reduce the risk of occupant injury during certain side impacts, in addition to the injury reduction potential provided by the seat belts and body structure.

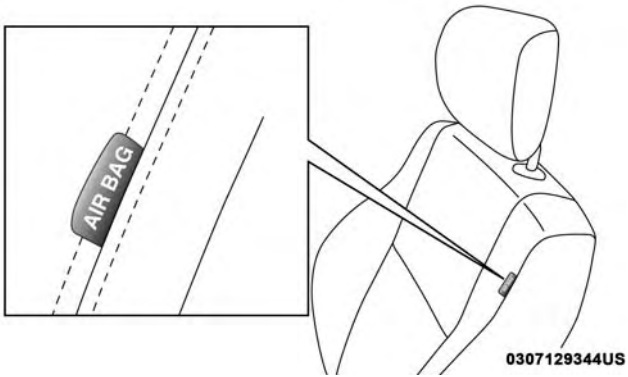

Front Supplemental Seat-Mounted Side Air Bag Label

When the SAB deploys, it opens the seam on the outboard side of the seatback's trim cover. The inflating SAB deploys through the seat seam into the space between the occupant and the door. The SAB moves at a very high speed and with such a high force that it could injure occupants if they are not seated properly, or if items are positioned in the area where the SAB inflates. Children are at an even greater risk of injury from a deploying air bag.

WARNING!

Do not use accessory seat covers or place objects between you and the Side Air Bags; the performance could be adversely affected and/or objects could be pushed into you, causing serious injury.

Supplemental Side Air Bag Inflatable Curtains (SABICs)

This vehicle is equipped with Supplemental Side Air Bag Inflatable Curtains (SABICs).

Supplemental Side Air Bag Inflatable Curtains (SABICs) are located above the side windows. The trim covering the SABICs is labeled "SRS AIRBAG" or "AIRBAG."

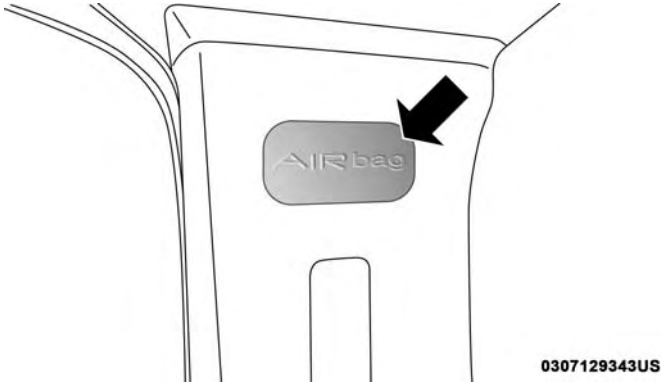

Supplemental Side Air Bag Inflatable Curtain (SABIC) Label Location

SABICs may help reduce the risk of head and other injuries to front and rear seat outboard occupants in certain side impacts, in addition to the injury reduction potential provided by the seat belts and body structure.

The SABIC deploys downward, covering the side windows. An inflating SABIC pushes the outside edge of the headliner out of the way and covers the window. The SABICs inflate with enough force to injure occupants if they are not belted and seated properly, or if items are positioned in the area where the SABICs inflate. Children are at an even greater risk of injury from a deploying air bag.

The SABICs may help reduce the risk of partial or complete ejection of vehicle occupants through side windows in certain side impact events.

WARNING!

- **Do not mount equipment, or stack luggage or other cargo up high enough to block the deployment of the SABICs. The trim covering above the side windows where the SABIC and its deployment path are located should remain free from any obstructions.**
- **In order for the SABICs to work as intended, do not install any accessory items in your vehicle which could alter the roof. Do not add an aftermarket sunroof to your vehicle. Do not add roof racks that require permanent attachments (bolts or screws) for installation on the vehicle roof. Do not drill into the roof of the vehicle for any reason.**

Side Impacts

The Side Air Bags are designed to activate in certain side impacts. The Occupant Restraint Controller (ORC) determines whether the deployment of the Side Air Bags in a particular impact event is appropriate, based on the severity and type of collision. The side impact sensors aid the ORC in determining the appropriate response to impact events. The system is calibrated to deploy the Side Air Bags on the impact side of the vehicle during impacts that require Side Air Bag occupant protection. In side impacts, the Side Air Bags deploy independently; a left side impact deploys the left Side Air Bags only and a right-side impact deploys the right Side Air Bags only. Vehicle damage by itself is not a good indicator of whether or not Side Air Bags should have deployed.

The Side Air Bags will not deploy in all side collisions, including some collisions at certain angles, or some side collisions that do not impact the area of the passenger compartment. The Side Air Bags may deploy during angled or offset frontal collisions where the front air bags deploy.

Side Air Bags are a supplement to the seat belt restraint system. Side Air Bags deploy in less time than it takes to blink your eyes.

WARNING!

- **Occupants, including children, who are up against or very close to Side Air Bags can be seriously injured or killed. Occupants, including children, should never lean on or sleep against the door, side windows, or area where the side air bags inflate, even if they are in an infant or child restraint.**
- **Seat belts (and child restraints where appropriate) are necessary for your protection in all collisions. They also help keep you in position, away from an inflating Side Air Bag. To get the best protection from the Side Air Bags, occupants must wear their seat belts properly and sit upright with their backs against the seats. Children must be properly restrained in a child restraint or booster seat that is appropriate for the size of the child.**

WARNING!

- **Side Air Bags need room to inflate. Do not lean against the door or window. Sit upright in the center of the seat.**
- **Being too close to the Side Air Bags during deployment could cause you to be severely injured or killed.**
- **Relying on the Side Air Bags alone could lead to more severe injuries in a collision. The Side Air Bags work with your seat belt to restrain you properly. In some collisions, Side Air Bags won't deploy at all. Always wear your seat belt even though you have Side Air Bags.**

NOTE: Air bag covers may not be obvious in the interior trim, but they will open during air bag deployment.

Rollover Events

Side Air Bags are designed to activate in certain rollover events. The ORC determines whether the deployment of the Side Air Bags in a particular rollover event is appropriate, based on the severity and type of collision. Vehicle damage by itself is not a good indicator of whether or not Side Air Bags should have deployed.

The Side Air Bags will not deploy in all rollover events. The rollover sensing system determines if a rollover event may be in progress and whether deployment is appropriate. In the event the vehicle experiences a rollover or near rollover event, and deployment of the Side Air Bags is appropriate, the rollover sensing system will also deploy the seat belt pretensioners on both sides of the vehicle.

The SABICs may help reduce the risk of partial or complete ejection of vehicle occupants through side windows in certain rollover or side impact events.

Air Bag System Components

NOTE: The Occupant Restraint Controller (ORC) monitors the internal circuits and interconnecting wiring associated with electrical Air Bag System Components listed below:

- Occupant Restraint Controller (ORC)
- Air Bag Warning Light
- Steering Wheel and Column
- Instrument Panel
- Knee Impact Bolsters
- Driver and Front Passenger Air Bags
- Seat Belt Buckle Switch

- Supplemental Side Air Bags
- Supplemental Knee Air Bags
- Front and Side Impact Sensors
- Seat Belt Pretensioners
- Seat Track Position Sensors

If A Deployment Occurs

The front air bags are designed to deflate immediately after deployment.

NOTE: Front and/or side air bags will not deploy in all collisions. This does not mean something is wrong with the air bag system.

If you do have a collision which deploys the air bags, any or all of the following may occur:

- The air bag material may sometimes cause abrasions and/or skin reddening to the occupants as the air bags deploy and unfold. The abrasions are similar to friction rope burns or those you might get sliding along a carpet or gymnasium floor. They are not caused by contact with chemicals. They are not permanent and normally heal quickly. However, if you haven't healed significantly within a few days, or if you have any blistering, see your doctor immediately.
- As the air bags deflate, you may see some smoke-like particles. The particles are a normal by-product of the process that generates the non-toxic gas used for air bag inflation. These airborne particles may irritate the skin, eyes, nose, or throat. If you have skin or eye irritation, rinse the area with cool water. For nose or throat irritation, move to fresh air. If the irritation continues, see your doctor. If these particles settle on your clothing, follow the garment manufacturer's instructions for cleaning.

Do not drive your vehicle after the air bags have deployed. If you are involved in another collision, the air bags will not be in place to protect you.

WARNING!

Deployed air bags and seat belt pretensioners cannot protect you in another collision. Have the air bags, seat belt pretensioners, and the seat belt retractor assemblies replaced by an authorized dealer immediately. Also, have the Occupant Restraint Controller System serviced as well.

NOTE:

- Air bag covers may not be obvious in the interior trim, but they will open during air bag deployment.
- After any collision, the vehicle should be taken to an authorized dealer immediately.

Enhanced Accident Response System

In the event of an impact, if the communication network remains intact, and the power remains intact, depending on the nature of the event, the ORC will determine whether to have the Enhanced Accident Response System perform the following functions:

- Cut off fuel to the engine (If Equipped)
- Cut off battery power to the electric motor (If Equipped)
- Flash hazard lights as long as the battery has power
- Turn on the interior lights, which remain on as long as the battery has power or for 15 minutes from the intervention of the Enhanced Accident Response System.
- Unlock the power door locks.

Your vehicle may also be designed to perform any of these other functions in response to the Enhanced Accident Response System:

- Turn off the Fuel Filter Heater, Turn off the HVAC Blower Motor, Close the HVAC Circulation Door
- Cut off battery power to the:
  - Engine
  - Electric Motor (if equipped)
  - Electric power steering
  - Brake booster
  - Electric park brake
  - Automatic transmission gear selector
  - Horn
  - Front wiper
  - Headlamp washer pump

NOTE: After an accident, remember to cycle the ignition to the STOP (OFF/LOCK) position and remove the key from the ignition switch to avoid draining the battery. Carefully check the vehicle for fuel leaks in the engine compartment and on the ground near the engine compartment and fuel tank before resetting the system and starting the engine. If there are no fuel leaks or damage to the vehicle electrical devices (e.g. headlights) after an accident, reset the system by following the procedure described below. If you have any doubt, contact an authorized dealer.

Enhanced Accident Response System Reset Procedure

After an event occurs requiring activation of the Enhanced Accident Response System, when the system is active, a "Service Electrical System" message will be displayed on the instrument cluster. The vehicle is not drivable in this state and must be towed to an authorized dealer immediately to be inspected and have the Enhanced Accident Response System reset.

Maintaining Your Air Bag System

WARNING!

- **Modifications to any part of the air bag system could cause it to fail when you need it. You could be injured if the air bag system is not there to protect you. Do not modify the components or wiring, including adding any kind of badges or stickers to the steering wheel hub trim cover or the upper passenger side of the instrument panel. Do not modify the front bumper, vehicle body structure, or add aftermarket side steps or running boards.**
- **It is dangerous to try to repair any part of the air bag system yourself. Be sure to tell anyone who works on your vehicle that it has an air bag system.**
- **Do not attempt to modify any part of your air bag system. The air bag may inflate accidentally or may not function properly if modifications are made. Take your vehicle to an authorized dealer for any air bag system service. If your seat, including your trim cover and cushion, needs to be serviced in any way (including removal or loosening/tightening of seat attachment bolts), take the vehicle to an authorized**

(Continued)

WARNING! ***(Continued)***

dealer. Only manufacturer approved seat accessories may be used. If it is necessary to modify the air bag system for persons with disabilities, contact an authorized dealer.

Event Data Recorder (EDR)

This vehicle is equipped with an event data recorder (EDR). The main purpose of an EDR is to record, in certain crash or near crash-like situations, such as an air bag deployment or hitting a road obstacle, data that will assist in understanding how a vehicle's systems performed. The EDR is designed to record data related to vehicle dynamics and safety systems for a short period of time, typically 30 seconds or less. The EDR in this vehicle is designed to record such data as:

- How various systems in your vehicle were operating;
- Whether or not the driver and passenger safety belts were buckled/fastened;
- How far (if at all) the driver was depressing the accelerator and/or brake pedal; and,
- How fast the vehicle was traveling.

These data can help provide a better understanding of the circumstances in which crashes and injuries occur.

NOTE: EDR data are recorded by your vehicle only if a non-trivial crash situation occurs; no data are recorded by the EDR under normal driving conditions and no personal data (e.g., name, gender, age, and crash location) are recorded. However, other parties, such as law enforcement, could combine the EDR data with the type of personally identifying data routinely acquired during a crash investigation.

To read data recorded by an EDR, special equipment is required, and access to the vehicle or the EDR is needed. In addition to the vehicle manufacturer, other parties, such as law enforcement, that have the special equipment, can read the information if they have access to the vehicle or the EDR.

Child Restraints

Everyone in your vehicle needs to be buckled up at all times, including babies and children. Every state in the United States, and every Canadian province, requires that small children ride in proper restraint systems. This is the law, and you can be prosecuted for ignoring it.

Children 12 years or younger should ride properly buckled up in a rear seat, if available. According to crash statistics, children are safer when properly restrained in the rear seats rather than in the front.

WARNING!

In a collision, an unrestrained child can become a projectile inside the vehicle. The force required to hold even an infant on your lap could become so great that you could not hold the child, no matter how strong you are. The child and others could be badly injured or killed. Any child riding in your vehicle should be in a proper restraint for the child's size.

There are different sizes and types of restraints for children from newborn size to the child almost large enough for an adult safety belt. Always check the child seat Owner's Manual to make sure you have the correct seat for your child. Carefully read and follow all the instructions and warnings in the child restraint Owner's Manual and on all the labels attached to the child restraint.

Before buying any restraint system, make sure that it has a label certifying that it meets all applicable Safety Standards. You should also make sure that you can install it in the vehicle where you will use it.

NOTE:

- For additional information, refer to http://www.nhtsa.gov/parents-and-caregivers or call 1-888-327-4236.
- Canadian residents should refer to Transport Canada's website for additional information: http://www.tc.gc.ca/eng/motorvehiclesafety/safedrivers-childsafety-index-53.htm.

Summary Of Recommendations For Restraining Children In Vehicles

	Child Size, Height, Weight Or Age	Recommended Type Of Child Restraint
Infants and Toddlers	Children who are two years old or younger and who have not reached the height or weight limits of their child restraint	Either an Infant Carrier or a Convertible Child Restraint, facing rearward in a rear seat of the vehicle
Small Children	Children who are at least two years old or who have outgrown the height or weight limit of their rear-facing child restraint	Forward-Facing Child Restraint with a five-point Harness, facing forward in a rear seat of the vehicle
Larger Children	Children who have outgrown their forward-facing child restraint, but are too small to properly fit the vehicle's seat belt	Belt Positioning Booster Seat and the vehicle seat belt, seated in a rear seat of the vehicle
Children Too Large for Child Restraints	Children 12 years old or younger, who have outgrown the height or weight limit of their booster seat	Vehicle Seat Belt, seated in a rear seat of the vehicle

Infant And Child Restraints

Safety experts recommend that children ride rear-facing in the vehicle until they are two years old or until they reach either the height or weight limit of their rear-facing child restraint. Two types of child restraints can be used rear-facing: infant carriers and convertible child seats.

The infant carrier is only used rear-facing in the vehicle. It is recommended for children from birth until they reach the weight or height limit of the infant carrier. Convertible child seats can be used either rear-facing or forward-facing in the vehicle. Convertible child seats often have a higher weight limit in the rear-facing direction than infant carriers do, so they can be used rear-facing by children who have outgrown their infant carrier but are still less than at least two years old. Children should remain rear-facing until they reach the highest weight or height allowed by their convertible child seat.

WARNING!

- **Never place a rear-facing child restraint in front of an air bag. A deploying passenger front air bag can cause death or serious injury to a child 12 years or**

(Continued)

WARNING! *(Continued)*

younger, including a child in a rear-facing child restraint.
- **Never install a rear-facing child restraint in the front seat of a vehicle. Only use a rear-facing child restraint in the rear seat. If the vehicle does not have a rear seat, do not transport a rear-facing child restraint in that vehicle.**

Older Children And Child Restraints

Children who are two years old or who have outgrown their rear-facing convertible child seat can ride forward-facing in the vehicle. Forward-facing child seats and convertible child seats used in the forward-facing direction are for children who are over two years old or who have outgrown the rear-facing weight or height limit of their rear-facing convertible child seat. Children should remain in a forward-facing child seat with a harness for as long as possible, up to the highest weight or height allowed by the child seat.

All children whose weight or height is above the forward-facing limit for the child seat should use a belt-positioning booster seat until the vehicle's seat belts fit properly. If the child cannot sit with knees bent over the vehicle's seat

cushion while the child's back is against the seatback, they should use a belt-positioning booster seat. The child and belt-positioning booster seat are held in the vehicle by the seat belt.

WARNING!

- **Improper installation can lead to failure of an infant or child restraint. It could come loose in a collision. The child could be badly injured or killed. Follow the child restraint manufacturer's directions exactly when installing an infant or child restraint.**
- **After a child restraint is installed in the vehicle, do not move the vehicle seat forward or rearward because it can loosen the child restraint attachments. Remove the child restraint before adjusting the vehicle seat position. When the vehicle seat has been adjusted, reinstall the child restraint.**
- **When your child restraint is not in use, secure it in the vehicle with the seat belt or LATCH anchorages, or remove it from the vehicle. Do not leave it loose in the vehicle. In a sudden stop or accident, it could strike the occupants or seatbacks and cause serious personal injury.**

Children Too Large For Booster Seats

Children who are large enough to wear the shoulder belt comfortably, and whose legs are long enough to bend over the front of the seat when their back is against the seatback, should use the seat belt in a rear seat. Use this simple 5-step test to decide whether the child can use the vehicle's seat belt alone:

1. Can the child sit all the way back against the back of the vehicle seat?
2. Do the child's knees bend comfortably over the front of the vehicle seat – while the child is still sitting all the way back?
3. Does the shoulder belt cross the child's shoulder between the neck and arm?
4. Is the lap part of the belt as low as possible, touching the child's thighs and not the stomach?
5. Can the child stay seated like this for the whole trip?

If the answer to any of these questions was "no," then the child still needs to use a booster seat in this vehicle. If the child is using the lap/shoulder belt, check seat belt fit

periodically and make sure the seat belt buckle is latched. A child's squirming or slouching can move the belt out of position. If the shoulder belt contacts the face or neck, move the child closer to the center of the vehicle, or use a booster seat to position the seat belt on the child correctly.

WARNING!

Never allow a child to put the shoulder belt under an arm or behind their back. In a crash, the shoulder belt will not protect a child properly, which may result in serious injury or death. A child must always wear both the lap and shoulder portions of the seat belt correctly.

Recommendations For Attaching Child Restraints

Restraint Type	Combined Weight of the Child + Child Restraint	Use Any Attachment Method Shown With An "X" Below			
		LATCH – Lower Anchors Only	Seat Belt Only	LATCH – Lower Anchors + Top Tether Anchor	Seat Belt + Top Tether Anchor
Rear-Facing Child Restraint	Up to 65 lbs (29.5 kg)	X	X		
Rear-Facing Child Restraint	More than 65 lbs (29.5 kg)		X		
Forward-Facing Child Restraint	Up to 65 lbs (29.5 kg)			X	X
Forward-Facing Child Restraint	More than 65 lbs (29.5 kg)				X

Lower Anchors And Tethers For CHildren (LATCH) Restraint System

LATCH Label

Your vehicle is equipped with the child restraint anchorage system called LATCH, which stands for Lower Anchors and Tethers for CHildren. The LATCH system has three vehicle anchor points for installing LATCH-equipped child seats. There are two lower anchorages located at the back of the seat cushion where it meets the seatback and one top tether anchorage located behind the seating position. These anchorages are used to install LATCH-equipped child seats without using the vehicle's seat belts. Some seating positions may have a top tether anchorage but no lower anchorages. In these seating positions, the seat belt must be used with the top tether anchorage to install the child restraint. Please see the following table for more information.

LATCH Positions For Installing Child Restraints In This Vehicle

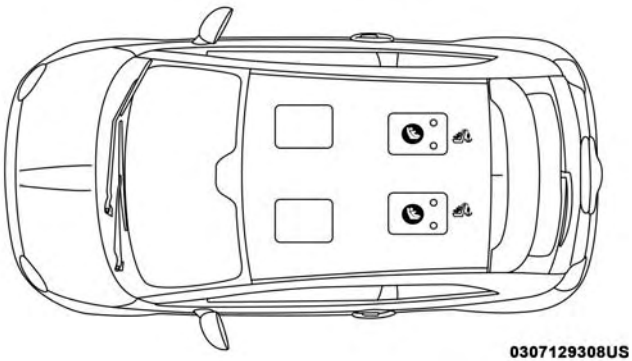

LATCH Positions

Lower Anchorage Symbol (2 Anchorages Per Seating Position)
Top Tether Anchorage Symbol

Frequently Asked Questions About Installing Child Restraints With LATCH		
What is the weight limit (child's weight + weight of the child restraint) for using the LATCH anchorage system to attach the child restraint?	65 lbs (29.5 kg)	Use the LATCH anchorage system until the combined weight of the child and the child restraint is 65 lbs (29.5 kg). Use the seat belt and tether anchor instead of the LATCH anchorage system once the combined weight is more than 65 lbs (29.5 kg).
Can the LATCH anchorages and the seat belt be used together to attach a rear-facing or forward-facing child restraint?	No	Do not use the seat belt when you use the LATCH anchorage system to attach a rear-facing or forward-facing child restraint. Booster seats may be attached to the LATCH anchorages if allowed by the booster seat manufacturer. See your booster seat owner's manual for more information.
Can two child restraints be attached using a common lower LATCH anchorage?	No	Never "share" a LATCH anchorage with two or more child restraints. If the center position does not have dedicated LATCH lower anchorages, use the seat belt to install a child seat in the center position next to a child seat using the LATCH anchorages in an outboard position.
Can the rear-facing child restraint touch the back of the front passenger seat?	Yes	The child seat may touch the back of the front passenger seat if the child restraint manufacturer also allows contact. See your child restraint owner's manual for more information.

Frequently Asked Questions About Installing Child Restraints With LATCH		
Can the rear head restraints be removed?	Yes	The head restraints can be removed in every seating position if they interfere with the installation of the child restraint. Refer to “Head Restraints” in “Getting To Know Your Vehicle” for further information.

Locating The LATCH Anchorages

The lower anchorages are round bars that are found at the rear of the seat cushion where it meets the seatback, below the anchorage symbols on the seatback. They are just visible when you lean into the rear seat to install the child restraint. You will easily feel them if you run your finger along the gap between the seatback and seat cushion.

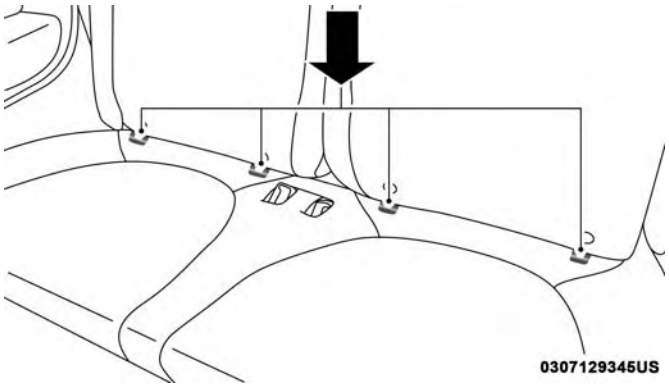

LATCH Lower Anchorages

Locating The Upper Tether Anchorages

There are tether strap anchorages behind each rear seating position located on the back of the seat.

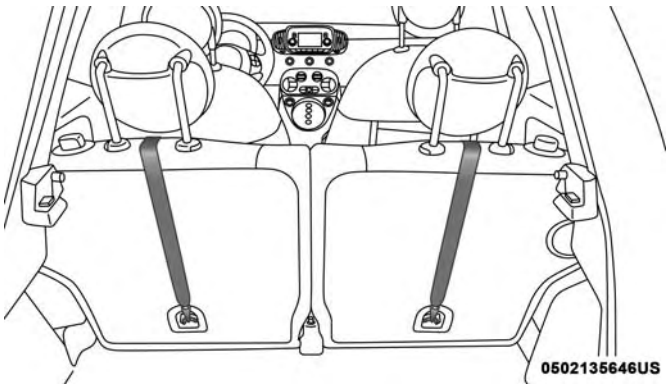

Rear Seat Tether Strap Mounting

LATCH-compatible child restraint systems will be equipped with a rigid bar or a flexible strap on each side. Each will have a hook or connector to attach to the lower anchorage and a way to tighten the connection to the anchorage. Forward-facing child restraints and some rear-facing child restraints will also be equipped with a tether strap. The tether strap will have a hook at the end to attach to the top tether anchorage and a way to tighten the strap after it is attached to the anchorage.

Center Seat LATCH

WARNING!

This vehicle does not have a center seating position. Do not use the center lower LATCH anchorages to install a child seat in the center of the back seat.

Always follow the directions of the child restraint manufacturer when installing your child restraint. Not all child restraint systems will be installed as described here.

To Install A LATCH-Compatible Child Restraint

If the selected seating position has a Switchable Automatic Locking Retractor (ALR) seat belt, stow the seat belt, following the instructions below. See the section “Installing Child Restraints Using the Vehicle Seat Belt” to check what type of seat belt each seating position has.

1. Loosen the adjusters on the lower straps and on the tether strap of the child seat so that you can more easily attach the hooks or connectors to the vehicle anchorages.

2. Place the child seat between the lower anchorages for that seating position. For some second row seats, you may need to recline the seat and / or raise the head restraint (if adjustable) to get a better fit. If the rear seat can be moved forward and rearward in the vehicle, you may wish to move it to its rear-most position to make room for the child seat. You may also move the front seat forward to allow more room for the child seat.
3. Attach the lower hooks or connectors of the child restraint to the lower anchorages in the selected seating position.
4. If the child restraint has a tether strap, connect it to the top tether anchorage. See the section "Installing Child Restraints Using the Top Tether Anchorage" for directions to attach a tether anchor.
5. Tighten all of the straps as you push the child restraint rearward and downward into the seat. Remove slack in the straps according to the child restraint manufacturer's instructions.
6. Test that the child restraint is installed tightly by pulling back and forth on the child seat at the belt path. It should not move more than 1 inch (25.4 mm) in any direction.

How To Stow An Unused Switchable-ALR (ALR) Seat Belt:

When using the LATCH attaching system to install a child restraint, stow all ALR seat belts that are not being used by other occupants or being used to secure child restraints. An unused belt could injure a child if they play with it and accidentally lock the seat belt retractor. Before installing a child restraint using the LATCH system, buckle the seat belt behind the child restraint and out of the child's reach. If the buckled seat belt interferes with the child restraint installation, instead of buckling it behind the child restraint, route the seat belt through the child restraint belt path and then buckle it. Do not lock the seat belt. Remind all children in the vehicle that the seat belts are not toys and that they should not play with them.

WARNING!

- **Improper installation of a child restraint to the LATCH anchorages can lead to failure of the restraint. The child could be badly injured or killed. Follow the child restraint manufacturer's directions exactly when installing an infant or child restraint.**

(Continued)

WARNING! *(Continued)*

- **Child restraint anchorages are designed to withstand only those loads imposed by correctly-fitted child restraints. Under no circumstances are they to be used for adult seat belts, harnesses, or for attaching other items or equipment to the vehicle.**

Installing Child Restraints Using The Vehicle Seat Belt

Child restraint systems are designed to be secured in vehicle seats by lap belts or the lap belt portion of a lap/shoulder belt.

WARNING!

- **Improper installation or failure to properly secure a child restraint can lead to failure of the restraint. The child could be badly injured or killed.**
- **Follow the child restraint manufacturer's directions exactly when installing an infant or child restraint.**

The seat belts in the passenger seating positions are equipped with a Switchable Automatic Locking Retractor (ALR) that is designed to keep the lap portion of the seat belt tight around the child restraint so that it is not necessary to use a locking clip. The ALR retractor can be "switched" into a locked mode by pulling all of the webbing out of the retractor and then letting the webbing retract back into the retractor. If it is locked, the ALR will make a clicking noise while the webbing is pulled back into the retractor.

Refer to the "Automatic Locking Mode" description in "Switchable Automatic Locking Retractors (ALR)" under "Occupant Restraint Systems" for additional information on ALR.

Please see the table below and the following sections for more information.

Lap/Shoulder Belt Systems For Installing Child Restraints In This Vehicle

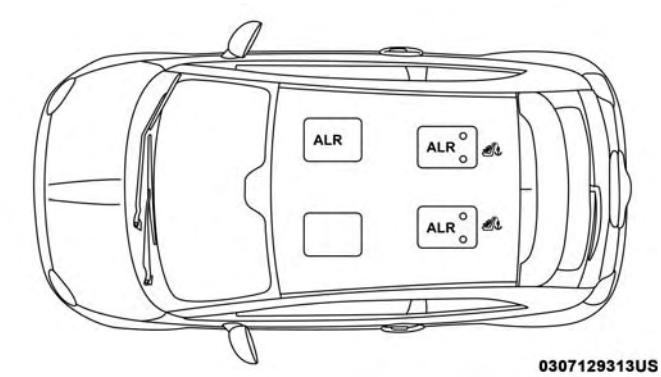

Automatic Locking Retractor (ALR) Locations

ALR = Switchable Automatic Locking Retractor
Top Tether Anchorage Symbol

Frequently Asked Questions About Installing Child Restraints With Seat Belts		
What is the weight limit (child's weight + weight of the child restraint) for using the Tether Anchor with the seat belt to attach a forward facing child restraint?	Weight limit of the Child Restraint	Always use the tether anchor when using the seat belt to install a forward facing child restraint, up to the recommended weight limit of the child restraint.

Frequently Asked Questions About Installing Child Restraints With Seat Belts		
Can the rear-facing child restraint touch the back of the front passenger seat?	Yes	Contact between the front passenger seat and the child restraint is allowed, if the child restraint manufacturer also allows contact.
Can the rear head restraints be removed?	Yes	The head restraints can be removed in every seating position if they interfere with the installation of the child restraint. Refer to "Head Restraints" in "Getting To Know Your Vehicle" for further information.
Can the buckle stalk be twisted to tighten the seat belt against the belt path of the child restraint?	No	Do not twist the buckle stalk in a seating position with an ALR retractor.

Installing A Child Restraint With A Switchable Automatic Locking Retractor (ALR):

Child restraint systems are designed to be secured in vehicle seats by lap belts or the lap belt portion of a lap/shoulder belt.

WARNING!

- **Improper installation or failure to properly secure a child restraint can lead to failure of the restraint. The child could be badly injured or killed.**
- **Follow the child restraint manufacturer's directions exactly when installing an infant or child restraint.**

1. Place the child seat in the center of the seating position. For some second row seats, you may need to recline the seat and/or raise the head restraint (if adjustable) to get a better fit. If the rear seat can be moved forward and rearward in the vehicle, you may wish to move it to its rear-most position to make room for the child seat. You may also move the front seat forward to allow more room for the child seat.
2. Pull enough of the seat belt webbing from the retractor to pass it through the belt path of the child restraint. Do not twist the belt webbing in the belt path.
3. Slide the latch plate into the buckle until you hear a "click."
4. Pull on the webbing to make the lap portion tight against the child seat.
5. To lock the seat belt, pull down on the shoulder part of the belt until you have pulled all the seat belt webbing out of the retractor. Then, allow the webbing to retract back into the retractor. As the webbing retracts, you will hear a clicking sound. This means the seat belt is now in the Automatic Locking mode.
6. Try to pull the webbing out of the retractor. If it is locked, you should not be able to pull out any webbing. If the retractor is not locked, repeat step 5.
7. Finally, pull up on any excess webbing to tighten the lap portion around the child restraint while you push the child restraint rearward and downward into the vehicle seat.
8. If the child restraint has a top tether strap and the seating position has a top tether anchorage, connect the tether strap to the anchorage and tighten the tether strap. See the section "Installing Child Restraints Using the Top Tether Anchorage" for directions to attach a tether anchor.
9. Test that the child restraint is installed tightly by pulling back and forth on the child seat at the belt path. It should not move more than 1 inch (25.4 mm) in any direction.

Any seat belt system will loosen with time, so check the belt occasionally, and pull it tight if necessary.

Installing Child Restraints Using The Top Tether Anchorage

WARNING!

Do not attach a tether strap for a rear-facing car seat to any location in front of the car seat, including the seat frame or a tether anchorage. Only attach the tether strap of a rear-facing car seat to the tether anchorage that is approved for that seating position, located behind the top of the vehicle seat. See the section "Lower Anchors and Tethers for CHildren (LATCH) Restraint System" for the location of approved tether anchorages in your vehicle.

1. Look behind the seating position where you plan to install the child restraint to find the tether anchorage. You may need to move the seat forward to provide better access to the tether anchorage. If there is no top tether anchorage for that seating position, move the child restraint to another position in the vehicle if one is available.
2. Route the tether strap to provide the most direct path for the strap between the anchor and the child seat. If your vehicle is equipped with adjustable rear head restraints, raise the head restraint, and where possible, route the tether strap under the head restraint and between the two posts. If not possible, lower the head restraint and pass the tether strap around the outboard side of the head restraint.
3. Attach the tether strap hook of the child restraint to the top tether anchorage as shown in the diagram.

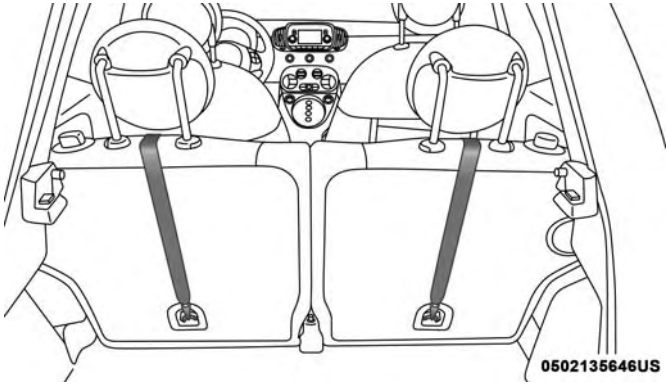

Rear Seat Tether Strap Mounting

4. Remove slack in the tether strap according to the child restraint manufacturer's instructions.

WARNING!

- **An incorrectly anchored tether strap could lead to increased head motion and possible injury to the child. Use only the anchorage position directly behind the child seat to secure a child restraint top tether strap.**

(Continued)

WARNING! *(Continued)*

- **If your vehicle is equipped with a split rear seat, make sure the tether strap does not slip into the opening between the seatbacks as you remove slack in the strap.**

Transporting Pets

Air Bags deploying in the front seat could harm your pet. An unrestrained pet will be thrown about and possibly injured, or injure a passenger during panic braking or in a collision.

Pets should be restrained in the rear seat (if equipped) in pet harnesses or pet carriers that are secured by seat belts.

SAFETY TIPS

Transporting Passengers

NEVER TRANSPORT PASSENGERS IN THE CARGO AREA.

WARNING!

- **Do not leave children or animals inside parked vehicles in hot weather. Interior heat build-up may cause serious injury or death.**
- **It is extremely dangerous to ride in a cargo area, inside or outside of a vehicle. In a collision, people riding in these areas are more likely to be seriously injured or killed.**
- **Do not allow people to ride in any area of your vehicle that is not equipped with seats and seat belts.**
- **Be sure everyone in your vehicle is in a seat and using a seat belt properly.**

Safety Checks You Should Make Inside The Vehicle

Seat Belts

Inspect the seat belt system periodically, checking for cuts, frays, and loose parts. Damaged parts must be replaced immediately. Do not disassemble or modify the system. Front seat belt assemblies must be replaced after a collision. Rear seat belt assemblies must be replaced after a collision if they have been damaged (i.e., bent retractor, torn webbing, etc.). If there is any question regarding seat belt or retractor condition, replace the seat belt.

Air Bag Warning Light

The Air Bag warning light will turn on for four to eight seconds as a bulb check when the ignition switch is first turned to ON/RUN. If the light is either not on during starting, stays on, or turns on while driving, have the system inspected at an authorized dealer as soon as possible. After the bulb check, this light will illuminate with a single chime when a fault with the Air Bag System has been detected. It will stay on until the fault is removed. If the light comes on intermittently or remains on while driving, have an authorized dealer service the vehicle immediately.

Refer to “Occupant Restraint Systems” in “Safety” for further information.

Defroster

Check operation by selecting the defrost mode and place the blower control on high speed. You should be able to

feel the air directed against the windshield. See an authorized dealer for service if your defroster is inoperable.

Floor Mat Safety Information

Always use floor mats designed to fit your vehicle. Only use a floor mat that does not interfere with the operation of the accelerator, brake or clutch pedals. Only use a floor mat that is securely attached using the floor mat fasteners so it cannot slip out of position and interfere with the accelerator, brake or clutch pedals or impair safe operation of your vehicle in other ways.

WARNING!

An improperly attached, damaged, folded, or stacked floor mat, or damaged floor mat fasteners may cause your floor mat to interfere with the accelerator, brake, or clutch pedals and cause a loss of vehicle control. To prevent SERIOUS INJURY or DEATH:

- **ALWAYS securely attach your floor mat using the floor mat fasteners. DO NOT install your floor mat upside down or turn your floor mat over. Lightly pull to confirm mat is secured using the floor mat fasteners on a regular basis.**

(Continued)

WARNING! ***(Continued)***

- **ALWAYS REMOVE THE EXISTING FLOOR MAT FROM THE VEHICLE before installing any other floor mat. NEVER install or stack an additional floor mat on top of an existing floor mat.**
- **ONLY install floor mats designed to fit your vehicle. NEVER install a floor mat that cannot be properly attached and secured to your vehicle. If a floor mat needs to be replaced, only use a FCA approved floor mat for the specific make, model, and year of your vehicle.**
- **ONLY use the driver's side floor mat on the driver's side floor area. To check for interference, with the vehicle properly parked with the engine off, fully depress the accelerator, the brake, and the clutch pedal (if present) to check for interference. If your floor mat interferes with the operation of any pedal, or is not secure to the floor, remove the floor mat from the vehicle and place the floor mat in your trunk.**
- **ONLY use the passenger's side floor mat on the passenger's side floor area.**

(Continued)

WARNING! *(Continued)*

- **ALWAYS make sure objects cannot fall or slide into the driver's side floor area when the vehicle is moving. Objects can become trapped under accelerator, brake, or clutch pedals and could cause a loss of vehicle control.**
- **NEVER place any objects under the floor mat (e.g., towels, keys, etc.). These objects could change the position of the floor mat and may cause interference with the accelerator, brake, or clutch pedals.**
- **If the vehicle carpet has been removed and re-installed, always properly attach carpet to the floor and check the floor mat fasteners are secure to the vehicle carpet. Fully depress each pedal to check for interference with the accelerator, brake, or clutch pedals then re-install the floor mats.**
- **It is recommended to only use mild soap and water to clean your floor mats. After cleaning, always check your floor mat has been properly installed and is secured to your vehicle using the floor mat fasteners by lightly pulling mat.**

Periodic Safety Checks You Should Make Outside The Vehicle

Tires

Examine tires for excessive tread wear and uneven wear patterns. Check for stones, nails, glass, or other objects lodged in the tread or sidewall. Inspect the tread for cuts and cracks. Inspect sidewalls for cuts, cracks, and bulges. Check the wheel nuts for tightness. Check the tires (including spare) for proper cold inflation pressure.

Lights

Have someone observe the operation of brake lights and exterior lights while you work the controls. Check turn signal and high beam indicator lights on the instrument panel.

Door Latches

Check for proper closing, latching, and locking.

Fluid Leaks

Check area under vehicle after overnight parking for coolant or other fluid leaks. If fluid leaks are suspected, the cause should be located and corrected immediately.

STARTING AND OPERATING

CONTENTS

■ STARTING PROCEDURES 157
- □ Single-Speed Transmission 157
- □ Normal Starting 157

■ PARKING BRAKE 158

■ SINGLE–SPEED TRANSMISSION 160
- □ Key Ignition Park Interlock 161
- □ Gear Ranges 161
- □ Auto Park 163

■ POWER STEERING 164

■ SPEED CONTROL 165
- □ To Activate 166
- □ To Set A Desired Speed. 166
- □ To Vary The Speed Setting 166
- □ To Accelerate For Passing 167
- □ To Resume Speed 168
- □ To Deactivate 168

■ REAR PARK ASSIST 168
- □ Rear Park Assist Sensors. 168
- □ Rear Park Assist Display. 168
- □ Rear Park Assist Audible Alerts. 169
- □ Failure Indications 170
- □ Cleaning The Rear Park Assist System 170
- □ Park Assist System Usage Precautions 170

■ PARKVIEW REAR BACK UP CAMERA 172

■ VEHICLE LOADING 173
- □ Certification Label 173

■ TRAILER TOWING 175

■ RECREATIONAL TOWING (BEHIND MOTORHOME, ETC.) 175
□ Towing This Vehicle Behind Another Vehicle . . .175
■ DRIVING TIPS 176
□ Driving On Slippery Surfaces 176
□ Driving Through Water 177
■ EXTENDING YOUR DRIVING RANGE PER CHARGE 178
□ Driver Behavior Gauge 179
□ Range Projection 180

STARTING PROCEDURES

Before starting your vehicle, adjust your seat, adjust both inside and outside mirrors, and fasten your seat belts.

WARNING!

- **Never leave children alone in a vehicle, or with access to an unlocked vehicle.**
- **Allowing children to be in a vehicle unattended is dangerous for a number of reasons. A child or others could be seriously or fatally injured. Children should be warned not to touch the parking brake, brake pedal or the transmission gear selector.**
- **Do not leave the key fob in or near the vehicle (or in a location accessible to children). A child could operate power windows, other controls, or move the vehicle.**

Single-Speed Transmission

The transmission must be in the PARK or NEUTRAL position before you can start the vehicle. Apply the brakes when selecting a transmission gear from Park.

NOTE: You must press the brake pedal before selecting a transmission gear.

Normal Starting

Turn the key to the START position while your vehicle is in PARK. When the ignition key is turned to the START and then released to the RUN position, a chime will sound and the "READY" indicator in the instrument cluster display will illuminate to indicate the 500e's Electric Drive System has started. When the "READY" indicator is illuminated your 500e is ready to be driven.

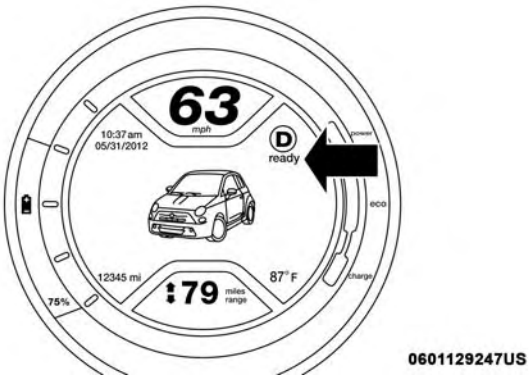

"READY" Indicator

NOTE:

- If the key is held in the START position for more than 10 seconds "READY" mode will not be achieved. Return the key to the OFF position, and then back to the START position and hold for less than 10 seconds to achieve "READY".
- If the "READY" indicator fails to illuminate after you have followed the normal starting procedure contact an authorized dealer.

PARKING BRAKE

Before leaving the vehicle, make sure that the parking brake is fully applied.

The parking brake lever is located in the center console. To apply the parking brake, pull the lever up as firmly as possible. To release the parking brake, pull the lever up slightly, push the center button, then lower the lever completely.

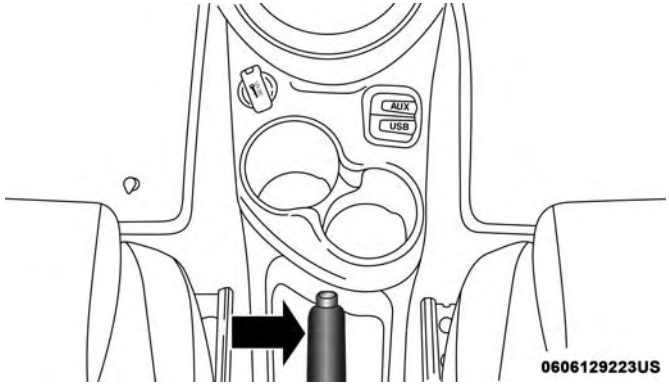

Parking Brake

When the parking brake is applied with the ignition switch in the MAR (ACC/ON/RUN) position, the Brake Warning Light in the instrument cluster will illuminate.

When parking on a hill, it is important to turn the front wheels toward the curb on a downhill grade and away from the curb on an uphill grade. The parking brake should always be applied whenever the driver is not in the vehicle.

WARNING!

- Never leave children alone in a vehicle, or with access to an unlocked vehicle.
- Allowing children to be in a vehicle unattended is dangerous for a number of reasons. A child or others could be seriously or fatally injured. Children should be warned not to touch the parking brake, brake pedal or the transmission push buttons.
- Do not leave the key fob in or near the vehicle (or in a location accessible to children). A child could operate power windows, other controls, or move the vehicle.
- Be sure the parking brake is fully disengaged before driving; failure to do so can lead to brake failure and a collision.
- Always fully apply the parking brake when leaving your vehicle, or it may roll and cause damage or injury.

CAUTION!

If the Brake Warning Light remains on with the parking brake released, a brake system malfunction is indicated. Have the brake system serviced by an authorized dealer immediately.

SINGLE–SPEED TRANSMISSION

Your 500e uses a Single-Speed Transmission to direct the output from the electric motor. The single-speed transmission is operated using push-buttons instead of a traditional gear selector.

The push-buttons are located on the lower instrument panel.

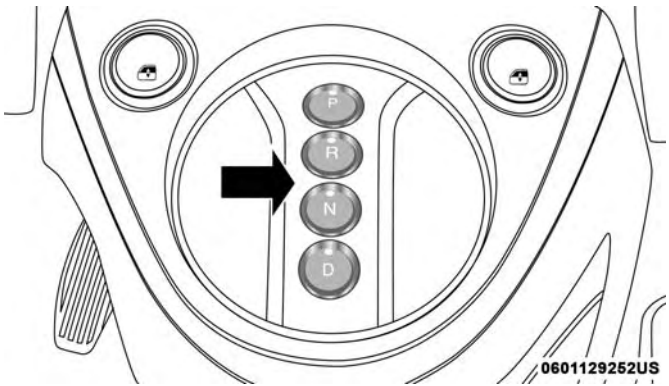

Single-Speed Transmission Push-Buttons

CAUTION!

Damage to the transmission may occur if the following precautions are not observed:

- **Place the transmission into PARK only after the vehicle has come to a complete stop.**
- **Place the transmission into or out of REVERSE only after the vehicle has come to a complete stop.**
- **Before placing the transmission into any range make sure your foot is firmly pressing the brake pedal.**

NOTE:

- You must press and hold the brake pedal while shifting in or out of PARK.
- If all push-button LEDs are on when the key is ON, see an authorized dealer.

WARNING!

- **Only place the transmission into gear when your foot is firmly pressing the brake pedal.**
- **Unintended movement of a vehicle could injure those in or near the vehicle. As with all vehicles, you**

(Continued)

WARNING! ***(Continued)***

should never exit a vehicle while the vehicle is in "READY" mode. Before exiting a vehicle, always apply the parking brake, shift the transmission into PARK, and remove the ignition key. Once the key is removed, the transmission is locked in PARK, securing the vehicle against unwanted movement.

- **When leaving the vehicle, always remove the ignition key and lock your vehicle.**
- **Never leave children alone in a vehicle, or with access to an unlocked vehicle. Allowing children to be in a vehicle unattended is dangerous for a number of reasons. A child or others could be seriously or fatally injured. Children should be warned not to touch the parking brake, brake pedal or the transmission range buttons.**
- **Do not leave the ignition key in or near the vehicle (or in a location accessible to children). A child could operate power windows, other controls, or move the vehicle.**

Key Ignition Park Interlock

This vehicle is equipped with a Key Ignition Park Interlock which requires the transmission to be in PARK before the ignition can be turned to the OFF position. The key can only be removed from the ignition when the ignition is in the OFF position, and once removed, the transmission is locked in PARK.

Gear Ranges

Push the desired push button to shift into gear.

NOTE:

- The brake pedal must be depressed to select a transmission gear.
- After selecting any gear, wait a moment to allow the selected gear to engage before accelerating.

PARK (P)

The PARK selection supplements the parking brake by locking the transmission. The vehicle can be started in this range. Never attempt to use PARK while the vehicle is in motion. Apply the parking brake when exiting the vehicle in PARK.

When parking on a level surface, you may place the transmission into PARK first, and then apply the parking brake.

When parking on a hill, apply the parking brake before placing the transmission into PARK. As an added precaution, turn the front wheels toward the curb on a downhill grade and away from the curb on an uphill grade.

When exiting the vehicle, always:

- Apply the parking brake.
- Shift the transmission into PARK.
- Turn the vehicle OFF.
- Remove the ignition key.

NOTE: Refer to the transmission range position displayed in the instrument cluster and verify that it indicates the PARK position.

WARNING!

- **Never use the PARK position as a substitute for the park brake. Always apply the park brake fully when exiting the vehicle to guard against vehicle movement and possible injury or damage.**
- **Your vehicle could move and injure you and others if it is not in PARK. Check by trying to move the gear selector out of PARK with the brake pedal released.**

(Continued)

WARNING! ***(Continued)***

Make sure the transmission is in PARK before exiting the vehicle.

- **It is dangerous to shift out of PARK or NEUTRAL if your foot is not firmly pressing the brake pedal. The vehicle could accelerate quickly forward or in reverse. You could lose control of the vehicle and hit someone or something. Only shift the transmission into gear when your foot is firmly pressing the brake pedal.**
- **Unintended movement of a vehicle could injure those in or near the vehicle. As with all vehicles, you should never exit a vehicle while the engine is running or the propulsion system is active. Before exiting a vehicle, always come to a complete stop, then apply the park brake, shift the transmission into PARK, turn the ignition OFF, and remove the key fob. When the ignition is in the OFF mode, the transmission is locked in PARK, securing the vehicle against unwanted movement.**
- **When leaving the vehicle, always remove the ignition key and lock your vehicle.**

(Continued)

WARNING! *(Continued)*

- **Never leave children alone in a vehicle, or with access to an unlocked vehicle. Allowing children to be in a vehicle unattended is dangerous for a number of reasons. A child or others could be seriously or fatally injured. Children should be warned not to touch the parking brake, brake pedal or the transmission range buttons.**
- **Do not leave the ignition key in or near the vehicle (or in a location accessible to children). A child could operate power windows, other controls, or move the vehicle.**

REVERSE (R)

This range is for moving the vehicle backward. Shift into REVERSE only after the vehicle has come to a complete stop.

NEUTRAL (N)

The vehicle may be started in this gear. Apply the parking brake and place the transmission into PARK if you must exit the vehicle.

WARNING!

Do not coast in NEUTRAL and never turn off the ignition to coast down a hill. These are unsafe practices that limit your response to changing traffic or road conditions. You might lose control of the vehicle and have a collision.

CAUTION!

Towing the vehicle, coasting, or driving for any other reason with the transmission in NEUTRAL can cause severe transmission damage. Refer to "Recreational Towing" in "Starting And Operating" and "Towing A Disabled Vehicle" in "In Case Of Emergency" for further information.

DRIVE (D)

Use this gear for all city and highway driving.

Auto Park

The Auto Park feature automatically places the transmission into PARK if there is any indication that the driver may exit the vehicle while the transmission is in D (DRIVE), N (NEUTRAL) or R (REVERSE).

Auto Park is enabled under the following condition:

- Key On (12 Volt ON and High Voltage OFF) or READY mode (12 Volt ON and High Voltage ON).

NOTE:

- Auto Park is enabled (only once) at the beginning of each key cycle and is re-enabled each time the vehicle speed exceeds 8 mph (13 km/h).

The instrument cluster will display an Auto Shift To Park message and chime once when Auto Park is activated.

Mode Of Operation With Key ON:

Auto Park will be engaged when the transmission is in DRIVE, NEUTRAL or REVERSE and the following conditions are detected:

- Seat Belt is unlatched
- Brake pedal is released
- Driver's door is ajar
- Vehicle speed is less than 2 mph (3 km/h)

Mode Of Operation With Key OFF:

Auto Park will be engaged when the transmission is in DRIVE, NEUTRAL or REVERSE and the vehicle speed is less than 2 mph (3 km/h).

POWER STEERING

The electric power steering system will give you good vehicle response and increased ease of maneuverability in tight spaces. The system will vary its assist to provide light efforts while parking and good feel while driving. If the electric steering system experiences a fault that prevents it from providing assist, you will still have the ability to steer the vehicle manually.

WARNING!

Continued operation with reduced or no power steering assist could pose a safety risk to yourself and others. Service should be obtained as soon as possible.

If the Steering icon is flashing, it indicates that the vehicle needs to be taken to an authorized dealer for service. It is likely the vehicle has lost power steering assistance.

If the Steering icon is displayed and the "SERVICE POWER STEERING" message is displayed on the instrument cluster screen, they indicate that extreme steering maneuvers may have occurred which caused an over temperature condition in the power steering system. Once driving conditions are safe, pull over and let the vehicle idle for a

few moments until the icon and message turn off. Refer to "Instrument Cluster Display" in "Getting To Know Your Instrument Panel" for further information.

If the Steering icon, and the "SERVICE POWER STEERING - ASSIST OFF" messages are displayed on the instrument cluster screen, the vehicle needs to be taken to an authorized dealer for service. Refer to "Instrument Cluster Display" in "Getting To Know Your Instrument Panel" for further information.

NOTE:

- Even if the power steering assistance is no longer operational, it is still possible to steer the vehicle. Under these conditions there will be a substantial increase in steering effort, especially at low speeds and during parking maneuvers.
- If the condition persists, see an authorized dealer for service.

SPEED CONTROL

When engaged, the Speed Control takes over accelerator operations at speeds greater than 25 mph (40 km/h).

The Speed Control buttons are located on the right side of the steering wheel.

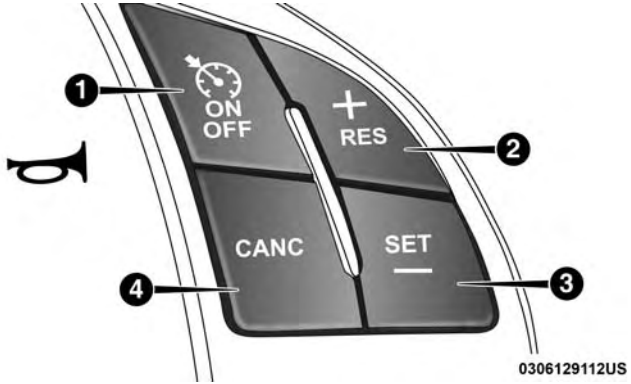

Speed Control Buttons

1 — ON/OFF	3 — SET (-)/Decel
2 — RES (+)/Resume/Accel	4 — CANC/Cancel

NOTE: In order to ensure proper operation, the Speed Control system has been designed to shut down if multiple Speed Control functions are operated at the same time. If this occurs, the Speed Control system can be reactivated by pushing the Speed Control ON/OFF button and resetting the desired vehicle set speed.

To Activate

Push the ON/OFF button. The Cruise Indicator Light in the instrument cluster display will illuminate. To turn the system off, push the ON/OFF button a second time. The Cruise Indicator Light will turn off. The system should be turned off when not in use.

WARNING!

Leaving the Speed Control system on when not in use is dangerous. You could accidentally set the system or cause it to go faster than you want. You could lose control and have an accident. Always leave the system off when you are not using it.

To Set A Desired Speed

Turn the Speed Control on. When the vehicle has reached the desired speed, push the SET (-) button and release. Release the accelerator and the vehicle will operate at the selected speed.

NOTE: The vehicle should be traveling at a steady speed and on level ground before pushing the SET (-) button.

To Vary The Speed Setting

To Increase Speed

When the Speed Control is set, you can increase speed by pushing the RES (+) button.

The driver's preferred units can be selected through the instrument panel settings if equipped. Refer to "Getting To Know Your Instrument Panel" for more information. The speed decrement shown is dependant on the chosen speed unit of U.S. (mph) or Metric (km/h):

U.S. Speed (mph)

- Pushing the RES (+) button once will result in a 1 mph increase in set speed. Each subsequent tap of the button results in an increase of 1 mph.
- If the button is continually pushed, the set speed will continue to increase until the button is released, then the new set speed will be established.

Metric Speed (km/h)

- Pushing the RES (+) button once will result in a 1 km/h increase in set speed. Each subsequent tap of the button results in an increase of 1 km/h.

- If the button is continually pushed, the set speed will continue to increase until the button is released, then the new set speed will be established.

To Decrease Speed

When the Speed Control is set, you can decrease speed by pushing the SET (-) button.

The driver's preferred units can be selected through the instrument panel settings if equipped. Refer to "Getting To Know Your Instrument Panel" for more information. The speed decrement shown is dependant on the chosen speed unit of U.S. (mph) or Metric (km/h):

U.S. Speed (mph)

- Pushing the SET (-) button once will result in a 1 mph decrease in set speed. Each subsequent tap of the button results in a decrease of 1 mph.
- If the button is continually pushed, the set speed will continue to decrease until the button is released, then the new set speed will be established.

Metric Speed (km/h)

- Pushing the SET (-) button once will result in a 1 km/h decrease in set speed. Each subsequent tap of the button results in a decrease of 1 km/h.
- If the button is continually pushed, the set speed will continue to decrease until the button is released, then the new set speed will be established.

To Accelerate For Passing

Press the accelerator as you would normally. When the pedal is released, the vehicle will return to the set speed.

Using Speed Control On Hills

NOTE: The Speed Control system maintains speed up and down hills. A slight speed change on moderate hills is normal.

On steep hills, a greater speed loss or gain may occur so it may be preferable to drive without Speed Control.

WARNING!

Speed Control can be dangerous where the system cannot maintain a constant speed. Your vehicle could go too fast for the conditions, and you could lose control and have an accident. Do not use Speed Control in heavy traffic or on roads that are winding, icy, snow-covered or slippery.

To Resume Speed

To resume a previously set speed, push the RES (+) button and release. Resume can be used at any speed above 20 mph (32 km/h).

To Deactivate

A soft tap on the brake pedal, pushing the CANC button, or normal brake pressure while slowing the vehicle will deactivate the Speed Control without erasing the set speed from memory.

Pushing the ON/OFF button or turning the ignition switch OFF erases the set speed from memory.

REAR PARK ASSIST

The Rear Park Assist system provides audible and visual indications of the distance between the rear fascia/bumper and a detected obstacle when backing up, e.g. during a parking maneuver. Refer to the "Park Assist System Usage Precautions" for the limitations of this system and recommendations.

The Rear Park Assist is automatically activated when the transmission is placed into REVERSE.

Rear Park Assist Sensors

The four Rear Park Assist sensors, located in the rear fascia/bumper, monitor the area behind the vehicle that is within the sensors' field of view. The sensors can detect obstacles, in the horizontal direction, from approximately 12 inches (30 cm) up to 55 inches (140 cm) from the center of the rear fascia/bumper and up to 24 inches (60 cm) from the corners of the rear fascia/bumper, depending on the location, type and orientation of the obstacle.

If several obstacles are detected, the Rear Park Assist system indicates the nearest obstacle.

The minimum height of a detectable obstacle corresponds to the maximum height of an obstacle that would clear the underside of the vehicle during the parking maneuver.

Rear Park Assist Display

When the vehicle is in REVERSE, the warning display will turn ON indicating the system status.

The system will indicate a detected obstacle by showing arcs in one or more regions based on the obstacle's distance and location relative to the vehicle.

If an obstacle is detected in the center rear region, the display will show solid arcs in the center rear region and

will produce an audible alert. As the vehicle moves closer to the obstacle, the display will show fewer arcs and the audible alert becomes more frequent.

If an obstacle is detected in the left and/or right rear region, the display will show solid arcs in the left and/or right rear region and will produce an audible alert. As the vehicle moves closer to the obstacle, the display will show fewer arcs and the audible alert becomes more frequent.

Rear Park Assist Audible Alerts

If an obstacle is behind the vehicle when the transmission is placed into REVERSE, an audible alert is activated.

The tones emitted by the loudspeaker inform the driver that the vehicle is approaching an obstacle. The pauses between the tones are directly proportional to the distance from the obstacle. Pulses emitted in quick succession indicate the presence of a very close obstacle. A continuous tone indicates that the obstacle is less than 12 inches (30 cm) away.

Audible And Visual Signals Supplied By The Rear Park Assist System

SIGNAL	MEANING	INDICATION
Obstacle Distance	An obstacle is present within the sensors' field of view	**Audible Signal** (dashboard loudspeaker) • Sound pulses emitted at a rate that increases as the distance decreases. • Emits continuous tone at 12 inches (30 cm). • Adjustable volume level. (Refer to "Instrument Cluster Display" in "Getting To Know Your Instrument Panel" for further information).
Failure	Sensor or System failures	**Visual Signal** (instrument panel) • Icon appears on display. • Message is displayed on the instrument cluster display (if equipped).

While audible signals are emitted, the audio system is not muted.

The audible signal is turned off immediately if the distance increases. The tone cycle remains constant if the distance measured by the inner sensors is constant. If this condition occurs for the external sensors, the signal is turned off after 3 seconds (stopping warnings during maneuvers parallel to walls).

Failure Indications

A malfunction of the Rear Park Assist sensors or system is indicated, during REVERSE gear engagement, by the instrument panel warning icon and message appearing on the instrument cluster display.

The warning icon is illuminated and a message appears on the instrument cluster display. Refer to "Instrument Cluster Display" in "Getting To Know Your Instrument Panel" for further information.

The sensors and wiring are tested continuously when the ignition is in the ON/RUN position. Failures are indicated immediately if they occur when the system is on.

Even if the system is able to identify that a specific sensor is in failure condition, the instrument cluster display shall indicate that the Rear Park Assist system is unavailable, without reference to the sensor in failure condition. If even a single sensor fails, the entire system must be disabled. The system is turned off automatically.

Cleaning The Rear Park Assist System

Clean the Rear Park Assist sensors with water, car wash soap and a soft cloth. Do not use rough or hard cloths. In washing stations, clean sensors quickly keeping the vapor jet/high pressure washing nozzles at least 4 inches (10 cm) from the sensors. Do not scratch or poke the sensors. Otherwise, you could damage the sensors.

Park Assist System Usage Precautions

NOTE:

- Ensure that the outer surface and the underside of the rear bumper is clean and clear of snow, ice, mud, dirt or other obstruction to keep the Rear Park Assist system operating properly.
- Jackhammers, large trucks, and other vibrations could affect the performance of Rear Park Assist.
- Clean the Rear Park Assist sensors regularly, taking care not to scratch or damage them. The sensors must not be covered with ice, snow, slush, mud, dirt or debris.

Failure to do so can result in the system not working properly. The Rear Park Assist system might not detect an obstacle behind the fascia/bumper, or it could provide a false indication that an obstacle is behind the fascia/bumper.

- Objects such as bicycle carriers, etc., must not be placed within 12 inches (30 cm) from the rear fascia/bumper while driving the vehicle. Failure to do so can result in the system misinterpreting a close object as a sensor problem, causing a failure indication to be displayed in the instrument cluster display.

WARNING!

- **Drivers must be careful when backing up even when using ParkSense. Always check carefully behind your vehicle, look behind you, and be sure to check for pedestrians, animals, other vehicles, obstructions, and blind spots before backing up. You are responsible for safety and must continue to pay attention to your surroundings. Failure to do so can result in serious injury or death.**
- **Before using ParkSense, it is strongly recommended that the ball mount and hitch ball assembly is**

(Continued)

WARNING! ***(Continued)***

disconnected from the vehicle when the vehicle is not used for towing. Failure to do so can result in injury or damage to vehicles or obstacles because the hitch ball will be much closer to the obstacle than the rear fascia when the loudspeaker sounds the continuous tone. Also, the sensors could detect the ball mount and hitch ball assembly, depending on its size and shape, giving a false indication that an obstacle is behind the vehicle.

CAUTION!

- **ParkSense is only a parking aid and it is unable to recognize every obstacle, including small obstacles. Parking curbs might be temporarily detected or not detected at all. Obstacles located above or below the sensors will not be detected when they are in close proximity.**
- **The vehicle must be driven slowly when using ParkSense in order to be able to stop in time when an obstacle is detected. It is recommended that the driver looks over his/her shoulder when using ParkSense.**

PARKVIEW REAR BACK UP CAMERA

Your vehicle is equipped with the ParkView Rear Back Up Camera that allows you to see an on-screen image of the rear surroundings of your vehicle whenever the gear selector is put into REVERSE. The image will be displayed in the touchscreen display along with a caution note to "check entire surroundings" across the top of the screen. After five seconds, this note will disappear. The ParkView camera is located on the rear of the vehicle above the rear license plate.

When the vehicle is shifted out of REVERSE, the rear camera mode is exited and the last selected touchscreen appears again.

If your vehicle is equipped with the Camera Delay feature and it is turned on, the rear camera image will be displayed for up to ten seconds after the vehicle is shifted out of REVERSE unless one of the following conditions occurs:

- The vehicle speed exceeds 8 mph (13 km/h).
- The gear selector is moved to PARK.
- The soft button "Image defeat [X]" to disable the image is pressed.

When enabled, active guidelines are overlaid on the image to illustrate the width of the vehicle and its projected backup path based on the steering wheel position. A dashed center line overlay indicates the center of the vehicle to assist with parking.

Different colored zones indicate the distance to the rear of the vehicle.

The following table shows the approximate distances for each zone:

Zone	Distance To The Rear Of The Vehicle
Red	0 - 1 ft (0 - 30 cm)
Yellow	1 ft - 3 ft (30 cm - 1 m)
Green	3 ft or greater (1 m or greater)

WARNING!

Drivers must be careful when backing up even when using the ParkView Rear Back Up Camera. Always check carefully behind your vehicle, and be sure to check for pedestrians, animals, other vehicles, obstructions, or blind spots before backing up. You are responsible for the safety of your surroundings and must continue to pay attention while backing up. Failure to do so can result in serious injury or death.

CAUTION!

- **To avoid vehicle damage, ParkView should only be used as a parking aid. The ParkView camera is unable to view every obstacle or object in your drive path.**
- **To avoid vehicle damage, the vehicle must be driven slowly when using ParkView to be able to stop in time when an obstacle is seen. It is recommended that the driver look frequently over his/her shoulder when using ParkView.**

NOTE: If snow, ice, mud, or any foreign substance builds up on the camera lens, clean the lens, rinse with water, and dry with a soft cloth. Do not cover the lens.

VEHICLE LOADING

Certification Label

As required by National Highway Traffic Safety Administration regulations, your vehicle has a certification label affixed to the driver's side door or pillar.

This label contains the month and year of manufacture, Gross Vehicle Weight Rating (GVWR), Gross Axle Weight Rating (GAWR) front and rear, and Vehicle Identification Number (VIN). A Month-Day-Hour (MDH) number is included on this label and indicates the Month, Day and Hour of manufacture. The bar code that appears on the bottom of the label is your VIN.

Gross Vehicle Weight Rating (GVWR)

The GVWR is the total permissible weight of your vehicle including driver, passengers, vehicle, options and cargo. The label also specifies maximum capacities of front and rear axle systems (GAWR). Total load must be limited so GVWR and front and rear GAWR are not exceeded.

Payload

The payload of a vehicle is defined as the allowable load weight a truck can carry, including the weight of the driver, all passengers, options and cargo.

Gross Axle Weight Rating (GAWR)

The GAWR is the maximum permissible load on the front and rear axles. The load must be distributed in the cargo area so that the GAWR of each axle is not exceeded.

Each axle GAWR is determined by the components in the system with the lowest load carrying capacity (axle, springs, tires or wheels). Heavier axles or suspension components sometimes specified by purchasers for increased durability does not necessarily increase the vehicle's GVWR.

Tire Size

The tire size on the Vehicle Certification Label represents the actual tire size on your vehicle. Replacement tires must be equal to the load capacity of this tire size.

Rim Size

This is the rim size that is appropriate for the tire size listed.

Inflation Pressure

This is the cold tire inflation pressure for your vehicle for all loading conditions up to full GAWR.

Curb Weight

The curb weight of a vehicle is defined as the total weight of the vehicle with all fluids at full capacity conditions, and with no occupants or cargo loaded into the vehicle. The front and rear curb weight values are determined by weighing your vehicle on a commercial scale before any occupants or cargo are added.

Loading

The actual total weight and the weight of the front and rear of your vehicle at the ground can best be determined by weighing it when it is loaded and ready for operation.

The entire vehicle should first be weighed on a commercial scale to insure that the GVWR has not been exceeded. The weight on the front and rear of the vehicle should then be determined separately to be sure that the load is properly distributed over the front and rear axle. Weighing the vehicle may show that the GAWR of either the front or rear axles has been exceeded but the total load is within the specified GVWR. If so, weight must be shifted from front to rear or rear to front as appropriate until the specified weight limitations are met. Store the heavier items down low and be sure that the weight is distributed equally. Stow all loose items securely before driving.

Improper weight distributions can have an adverse effect on the way your vehicle steers and handles and the way the brakes operate.

CAUTION!

Do not load your vehicle any heavier than the GVWR or the maximum front and rear GAWR. If you do, parts on your vehicle can break, or it can change the way your vehicle handles. This could cause you to lose control. Also overloading can shorten the life of your vehicle.

TRAILER TOWING

Trailer towing with this vehicle is not recommended.

RECREATIONAL TOWING (BEHIND MOTORHOME, ETC.)

Towing This Vehicle Behind Another Vehicle

Towing Condition	Wheels OFF the Ground	Single-Speed Transmission
Flat Tow	NONE	NOT ALLOWED
Dolly Tow	Front	OK
	Rear	NOT ALLOWED
On Trailer	ALL	OK

NOTE:

- When towing your vehicle, always follow applicable state and provincial laws. Contact state and provincial Highway Safety offices for additional details.
- This vehicle must be towed on a dolly or vehicle trailer with the front wheels **OFF** the ground.

CAUTION!

Towing this vehicle in violation of the above requirements can cause severe transmission damage. Damage from improper towing is not covered under the New Vehicle Limited Warranty.

DRIVING TIPS

Driving On Slippery Surfaces

Information in this section will aid in safe controlled launches in adverse conditions.

Acceleration

Rapid acceleration on snow covered, wet, or other slippery surfaces may cause the driving wheels to pull erratically to the right or left. This phenomenon occurs when there is a difference in the surface traction under the front (driving) wheels.

WARNING!

Rapid acceleration on slippery surfaces is dangerous. Unequal traction can cause sudden pulling of the front wheels. You could lose control of the vehicle and possibly have a collision. Accelerate slowly and carefully whenever there is likely to be poor traction (ice, snow, wet, mud, loose sand, etc.).

Traction

When driving on wet or slushy roads, it is possible for a wedge of water to build up between the tire and road surface. This is hydroplaning and may cause partial or complete loss of vehicle control and stopping ability. To reduce this possibility, the following precautions should be observed:

- Slow down during rainstorms or when the roads are slushy.
- Slow down if the road has standing water or puddles.
- Replace the tires when tread wear indicators first become visible.

- Keep tires properly inflated.
- Maintain sufficient distance between your vehicle and the vehicle in front of you to avoid a collision in a sudden stop.

Driving Through Water

Driving through water more than a few inches/centimeters deep will require extra caution to ensure safety and prevent damage to your vehicle.

Flowing/Rising Water

WARNING!

Do not drive on or across a road or path where water is flowing and/or rising (as in storm run-off). Flowing water can wear away the road or path's surface and cause your vehicle to sink into deeper water. Furthermore, flowing and/or rising water can carry your vehicle away swiftly. Failure to follow this warning may result in injuries that are serious or fatal to you, your passengers, and others around you.

Shallow Standing Water

Although your vehicle is capable of driving through shallow standing water, consider the following Caution and Warning before doing so.

CAUTION!

- **Always check the depth of the standing water before driving through it. Never drive through standing water that is deeper than the bottom of the tire rims mounted on the vehicle.**
- **Determine the condition of the road or the path that is under water and if there are any obstacles in the way before driving through the standing water.**
- **Do not exceed 5 mph (8 km/h) when driving through standing water. This will minimize wave effects.**
- **Driving through standing water may cause damage to your vehicle's drivetrain components. Always inspect your vehicle's fluids (i.e., transmission, coolant, etc.) for signs of contamination (i.e., fluid that is milky or foamy in appearance) after driving through standing water. Do not continue to operate the vehicle if any fluid appears contaminated, as this may**

(Continued)

CAUTION! ***(Continued)***

result in further damage. Such damage is not covered by the New Vehicle Limited Warranty.

- **Driving through standing water limits your vehicle's traction capabilities. Do not exceed 5 mph (8 km/h) when driving through standing water.**
- **Driving through standing water limits your vehicle's braking capabilities, which increases stopping distances. Therefore, after driving through standing water, drive slowly and lightly press on the brake pedal several times to dry the brakes.**
- **Failure to follow these warnings may result in injuries that are serious or fatal to you, your passengers, and others around you.**

EXTENDING YOUR DRIVING RANGE PER CHARGE

The drive system and cabin temperature management features use the most energy from the high voltage battery. Reducing energy draw from these features are the easiest and most effective way to extend driving range.

The 500e uses high voltage components to heat and cool the cabin, so when using automatic climate control, consider setting temperatures a few degrees higher or lower during hot and cold days. If your 500e has been soaking in hot or cold temperatures for an extended period, it is recommended that the car be preconditioned using the Uconnect smartphone app (not available in Canada) while still plugged into a charging source. This will allow 500e to use external power to establish a comfortable cabin temperature before the drive and allow the battery to maintain the temperature at significantly lower energy levels.

Additional tips:

- Keep tires properly inflated.
- When practical, choose surface streets over the highway, and work to maintain a steady speed.
- Avoid carrying nonessential cargo.
- Be mindful of adding external accessories that may increase aerodynamic drag.
- Perform all scheduled maintenance at recommended intervals.

Driver Behavior Gauge

To help the driver extend the driving range of the high voltage battery your vehicle is equipped with a Driver Behavior Gauge. The Driver Behavior Gauge is located on the right side of the instrument cluster and contains three driving ranges:

- *Power*

The needle will move into the Power range when under acceleration.

- *ECO*

The needle will move into the ECO range when you are maximizing the driving range of the high voltage battery.

- *Charge*

The needle will move into the Charge range when battery regeneration is active (either coasting or braking).

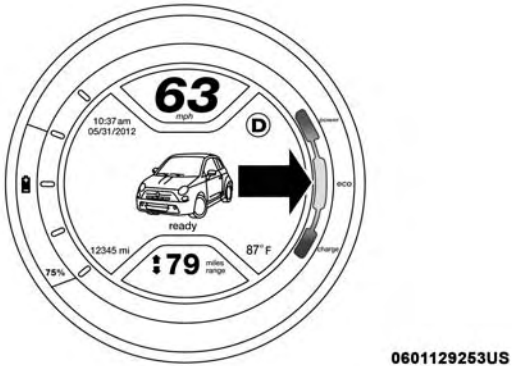

Driver Behavior Gauge

Range Projection

This area of the cluster is used to display the projected range considering current battery charge and previous energy use. The two arrows to the left of the mileage are used to forecast the effect of recent driving.

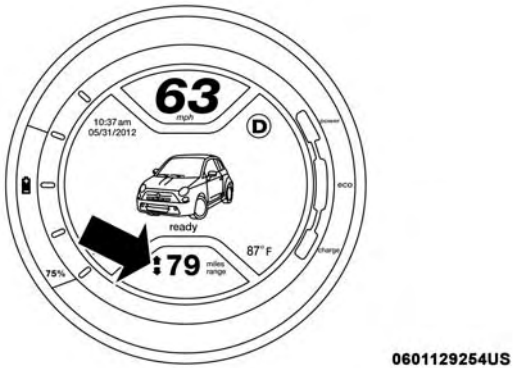

Range Projection Indicators

- When both arrows are grey, expect the range to drop approximately one mile for each mile driven.
- When the up arrow is highlighted, expect the range number to hold steady or increase while driving.
- When the down arrow is highlighted, expect the range number to decrease more than one mile for each mile driven.

IN CASE OF EMERGENCY

CONTENTS

- HAZARD WARNING FLASHERS 182
- BULB REPLACEMENT 182
  - Replacement Bulbs 182
  - Replacing Exterior Bulbs. 184
  - Replacing Interior Bulbs 186
- FUSES 186
  - Interior Fuses. 187
  - Power Distribution Center #1 190
  - Power Distribution Center #2 193
- TIRE SERVICE KIT — IF EQUIPPED 194
  - Tire Service Kit Storage. 194
  - Tire Service Kit Components And Operation . . .195
  - Tire Service Kit Usage Precautions 196
  - Sealing A Tire With Tire Service Kit 197
- JUMP STARTING PROCEDURE (12 VOLT BATTERY ONLY) 202
  - Preparations For Jump Start 202
  - Jump Starting Procedure. 203
- MANUAL PARK RELEASE 205
- FREEING A STUCK VEHICLE 206
- TOWING A DISABLED VEHICLE 207
- ENHANCED ACCIDENT RESPONSE SYSTEM (EARS) 208
- EVENT DATA RECORDER (EDR) 208

HAZARD WARNING FLASHERS

The Hazard Warning flasher switch is located on the instrument panel below the radio.

Push the switch to turn on the Hazard Warning flashers. When the switch is activated, all directional turn signals will flash on and off to warn oncoming traffic of an emergency. Push the switch a second time to turn off the Hazard Warning flashers.

Do not use this emergency warning system when the vehicle is in motion. Use it when your vehicle is disabled and it is creating a safety hazard for other motorists.

If it is necessary to leave the vehicle to go for service, the Hazard Warning flashers will continue to operate with the ignition key removed and the vehicle locked.

NOTE: With extended use, the Hazard Warning flashers may wear down your battery.

BULB REPLACEMENT

Replacement Bulbs

Interior Bulbs

	Bulb Number
Overhead Lamp	C5W
Courtesy Lamp	W5W
Rear Cargo Lamps	W5W

Exterior Bulbs

	Bulb Number
Front Low and High Beam Headlamp	HIR2LL
Front Parking/Daytime Running Lamps	W21/5W
Front Fog Lamps	H11LL
Front Side Marker Lamps	W3W
Front Turn Signal Lamps	WY21W
Side Direction Lamps	WY5W
Rear Turn Signal Lamps	PY21W
Rear Side Marker Lamps	W3W
Rear Tail and Stop Lamps	P21/5W
Rear Backup Lamps	W16W
Center High Mounted Stop Lamp	LED (See authorized dealer)
License Plate Lamps	LED (See authorized dealer)
NOTE: Numbers refer to commercial bulb types that can be purchased from an authorized dealer.	
If a bulb needs to be replaced, visit an authorized dealer or refer to the applicable Service Manual.	

Replacing Exterior Bulbs

Headlamps Low Beam And High Beam

1. Remove the plastic cap from the back of the headlamp housing.
2. Rotate the bulb counter-clockwise.
3. Remove the bulb and replace as needed.
4. Install the bulb and rotate clockwise to lock in place.
5. Reinstall the plastic cap.

Front Turn Signal, Parking And Daytime Running Lamps

1. Turn the steering wheel completely to the left or right.
2. Open the wheel housing access door.

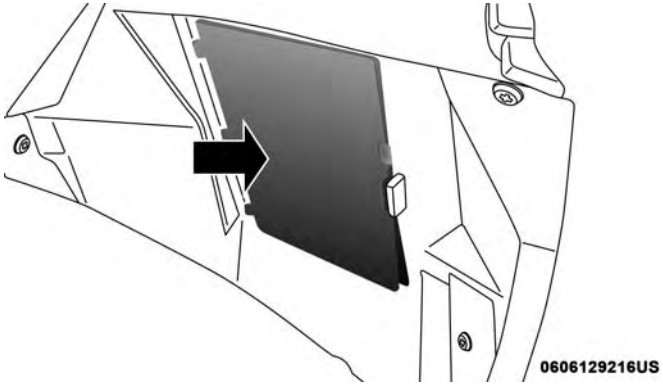

Wheel Housing Access Door

3. Remove the plastic cap from the back of the lamp housing.
4. Rotate bulb/socket counter-clockwise.
5. Remove the bulb and replace as needed.
6. Install the bulb into socket, and rotate bulb/socket clockwise into lamp locking it in place.
7. Reinstall the plastic cap.

Front Fog Lamps

To replace the front fog lights, see an authorized dealer.

Front/Rear Side Marker Lamps

1. Remove portion of the wheel liner to allow hand access to side marker lamp.
2. Rotate the bulb socket counterclockwise, and remove the bulb and socket assembly from the housing.
3. Pull the bulb from the socket and insert the replacement bulb.
4. Install the bulb and socket assembly into the housing, and rotate the socket clockwise to lock it in place.
5. Reinstall the wheel liner.

Rear Tail, Stop, Backup And Turn Signal Lamps

1. Open the liftgate.
2. Remove the two screws and remove the tail lamp assembly.

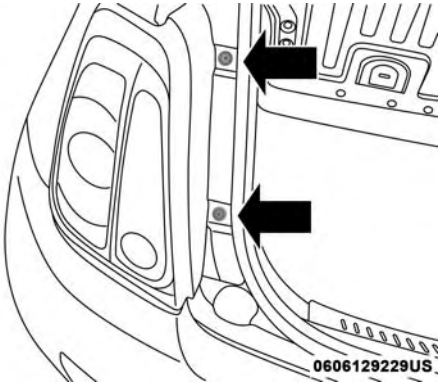

Tail Lamp Assembly Screws

3. Remove four screws and separate the backplate from the lamp housing.
4. Remove the tail, stop, or turn signal bulbs by pushing them slightly and turning counter-clockwise.
5. Remove the backup lamp bulb by pulling straight out.
6. Replace lamps as required and reinstall lamp.

Replacing Interior Bulbs

Rear Cargo Lamp

1. Using a suitable tool open the light box.
2. Pull the bulb out.
3. Replace the bulb, and reinstall the light box cover.

FUSES

WARNING!

- **When replacing a blown fuse, always use an appropriate replacement fuse with the same amp rating as the original fuse. Never replace a fuse with another fuse of higher amp rating. Never replace a blown fuse with metal wires or any other material. Do not place a fuse inside a circuit breaker cavity or vice versa. Failure to use proper fuses may result in serious personal injury, fire and/or property damage.**
- **Before replacing a fuse, make sure that the ignition is off and that all the other services are switched off and/or disengaged.**

(Continued)

WARNING! ***(Continued)***

- **If the replaced fuse blows again, contact an authorized dealer.**
- **If a general protection fuse for safety systems (air bag system, braking system), power unit systems (engine system, transmission system) or steering system blows, contact an authorized dealer.**

Interior Fuses

The interior fuse panel is part of the Body Control Module (BCM) and is located on the driver's side under the instrument panel.

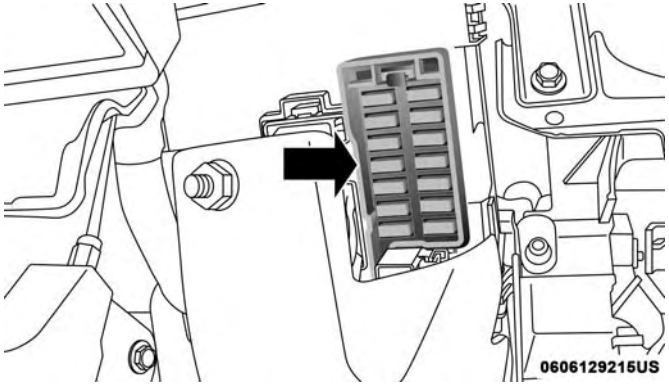

Fuse Panel

Cavity	Vehicle Fuse Number	Mini Fuse	Description
1	F12	7.5 Amp Brown	Right Low Beam
2	F32	5 Amp Tan	Front and Rear Ceiling Lights Trunk and Door Courtesy Lights
3	F53	5 Amp Tan	Instrument Panel Node
4	F38	20 Amp Yellow	Central Door Locking
5	F36	10 Amp Red	Diagnostic Socket, Climate Control System, Tire Pressure Monitor, TCU
6	F43	20 Amp Yellow	Bi-Directional Washer

Cavity	Vehicle Fuse Number	Mini Fuse	Description
7	F48	20 Amp Yellow	Passenger Power Window
8	F13	7.5 Amp Brown	Left Low Beam
9	F50	7.5 Amp Brown	Airbag
10	F51	5 Amp Tan	Climate Control System, Stop Light, Exterior Mirrors, Sunroof Switch
11	F37	5 Amp Tan	Stop Light Switch, Instrument Panel Node
12	F49	5 Amp Tan	Exterior Mirror, Electric Mirror, Parking Sensor, Sunroof Switch
13	F31	5 Amp Tan	Ignition, Climate Control, RDU and EVCU
14	F47	20 Amp Yellow	Driver Power Window

The fuse for the heated mirrors is located behind an access panel on the front of the Instrument Panel.

NOTE: This fuse is a single fuse attached directly to the wire harness.

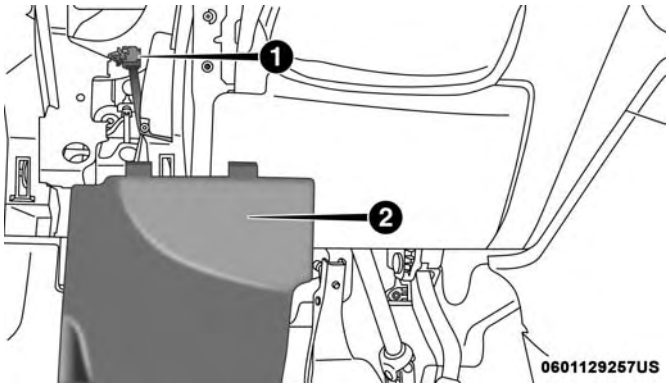

F90 Fuse Location

1 — Heated Mirror Fuse 2 — Access Panel

Cavity	Mini Fuse	Description
F90	5 Amp Tan	Heated Mirrors

Power Distribution Center #1

The Power Distribution Center #1 is located on the right side of the underhood compartment. To access the fuses, remove locking screw and slide cover off.

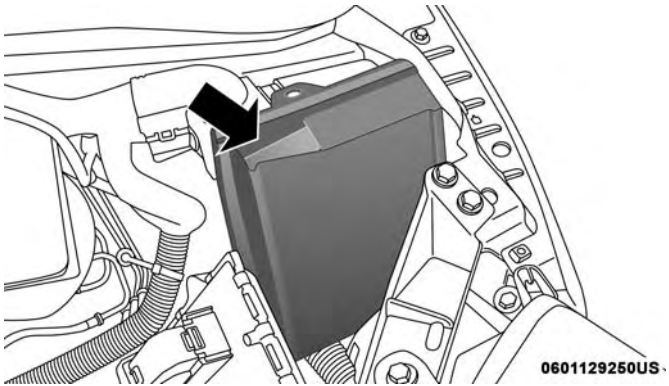

Front Distribution Unit

The ID number of the electrical component corresponding to each fuse can be found on the back of the cover.

Cavity	Maxi Fuse	Mini Fuse	Description
F01	60 Amp Blue	–	Body Control Module (BCM)
F02	20 Amp Yellow	–	Audio Amplifier
F03	20 Amp Yellow	–	Ignition Switch
F04	40 Amp Orange	–	Brake System Module Pump
F05	70 Amp Tan	–	Electric Power Steering (EPS)

Cavity	Maxi Fuse	Mini Fuse	Description
F06	60 Amp Blue	–	Radiator Fan
F07	40 Amp Orange	–	Regen Brake Module
F08	40 Amp Orange	–	HVAC
F09	–	5 Amp Tan	Air Electric Heater Charge Indicator
F10	–	10 Amp Red	Horn
F11	–	10 Amp Red	Electronic Vehicle Control Unit (EVCU)
F14	–	5 Amp Tan	High Beam (Shutter)
F15	–	15 Amp Blue	Cigar Lighter, AUX Power Outlet
F16	–	10 Amp Red	Humidity Sensor VPAM AC Compressor
F18	–	5 Amp Tan	Electronic Vehicle Control Unit (EVCU)
F19	–	10 Amp Red	HVAC
F20	–	15 Amp Blue	Heated Seats – If Equipped
F21	–	20 Amp Yellow	Radio
F23	–	25 Amp Clear	Anti-Lock Brake Valves
F24	–	7.5 Amp Brown	EPS YAW Sensor
F30	–	15 Amp Blue	Fog Lamps

Cavity	Maxi Fuse	Mini Fuse	Description
F81	30 Amp Green	–	Electronic Shifter (ESM)
F82	30 Amp Green	–	Sunroof
F84	–	25 Amp Clear	Regen Brake Module
F85	30 Amp Green	–	Rear Window Heater
F87	–	5 Amp Tan	Electronic Shifter (ESM)

Power Distribution Center #2

The Power Distribution Center #2 is located next to the battery in the underhood compartment. To access the fuses, pull the release tabs and remove the cover.

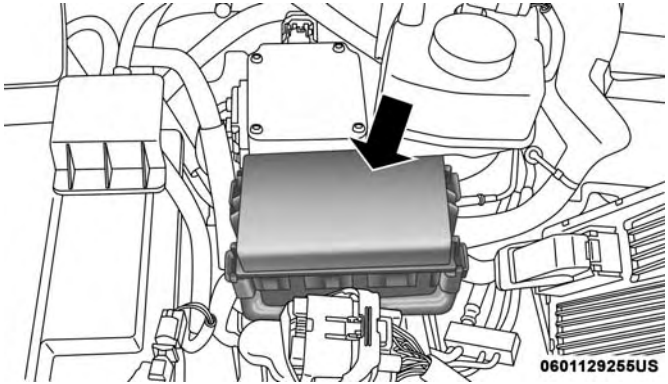

PDC #2

Cavity	Maxi Fuse	Mini Fuse	Description
FPT9	–	15 Amp Blue	Battery Pack Control Module (BPCM) Power Inverter Module (PIM)
FPT13	–	10 Amp Red	EAC (AC Compressor) On Board Charging Module (OBCM)
FPT16	–	5 Amp Tan	Intelligent Battery Sensor (IBS)
FPT17	–	10 Amp Red	EAC (AC Compressor) Radiator Fan
FPT20	–	10 Amp Red	Electronic Vehicle Control Unit (EVCU)

Cavity	Cartridge Fuse	Description
FPT3	25 Amp White	Battery Coolant Pump
FPT5	20 Amp Lt. Blue	Inverter Coolant Pump
FPT6	40 Amp Green	Supply for fuses F9, F13, F16, F17 and F20

TIRE SERVICE KIT — IF EQUIPPED

Small punctures up to 1/4 inch (6 mm) in the tire tread can be sealed with Tire Service Kit. Foreign objects (e.g., screws or nails) should not be removed from the tire. Tire Service Kit can be used in outside temperatures down to approximately -4°F (-20°C).

This kit will provide a temporary tire seal, allowing you to drive your vehicle up to 100 miles (160 km) with a maximum speed of 50 mph (80 km/h).

Tire Service Kit Storage

The Tire Service Kit is located in the rear cargo area.

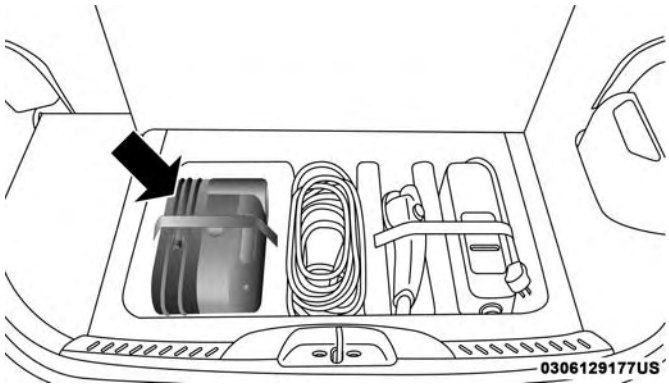

Tire Service Kit Location

Tire Service Kit Components And Operation

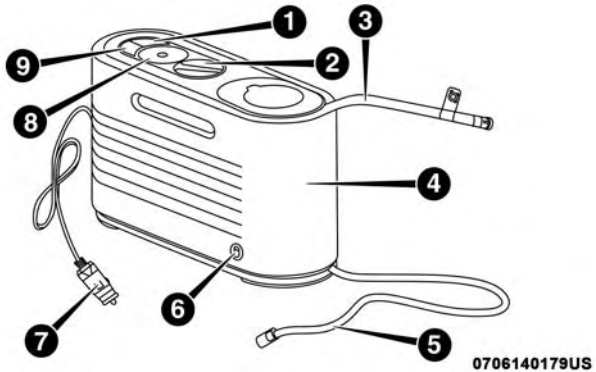

Tire Service Kit Components

1 — Power Button	4 — Sealant Bottle	7 — Power Plug
2 — Mode Select Knob	5 — Air Pump Hose (Black)	8 — Pressure Gauge
3 — Sealant Hose (Clear)	6 — Sealant Bottle Release Button	9 — Deflation Button

Using The Mode Select Knob And Hoses

Your Tire Service Kit is equipped with the following symbols to indicate the air or sealant mode.

Selecting Air Mode

Push in the Mode Select Knob (2) and turn to this position for air pump operation only. Use the Black Air Pump Hose (5) when selecting this mode.

Selecting Sealant Mode

Push in the Mode Select Knob (2) and turn to this position to inject the Tire Service Kit Sealant and to inflate the tire. Use the Sealant Hose (clear hose) (3) when selecting this mode.

Using The Power Button

Push and release the Power Button (1) once to turn on the Tire Service Kit. Push and release the Power Button (1) again to turn Off the Tire Service Kit.

Using The Deflation Button

Push the Deflation Button (9) to reduce the air pressure in the tire if it becomes over-inflated.

Tire Service Kit Usage Precautions

- Replace the Tire Service Kit Sealant Bottle (4) and Sealant Hose (3) prior to the expiration date (printed at the upper right hand corner on the bottle label) to assure optimum operation of the system. Refer to “Sealing A Tire With Tire Service Kit” section (F) “Sealant Bottle And Hose Replacement”.

Tire Service Kit Sealant Expiration Date Location

- The Sealant Bottle (4) and Sealant Hose (3) are a one tire application use and need to be replaced after each use. Always replace these components immediately at your original equipment vehicle dealer.
- When the Tire Service Kit sealant is in a liquid form, clean water and a damp cloth will remove the material from the vehicle or tire and wheel components. Once the sealant dries, it can easily be peeled off and properly discarded.
- For optimum performance, make sure the valve stem on the wheel is free of debris before connecting the Tire Service Kit.
- You can use the Tire Service Kit air pump to inflate bicycle tires. The kit also comes with two needles, located in the Accessory Storage Compartment (on the bottom of the air pump) for inflating sport balls, rafts, or similar inflatable items. However, use only the Air Pump Hose (5) and make sure the Mode Select Knob (2) is in the Air Mode when inflating such items to avoid injecting sealant into them. The Tire Service Kit Sealant is only intended to seal punctures less than 1/4 inch (6 mm) diameter in the tread of your tire.
- Do not lift or carry the Tire Service Kit by the hoses.

WARNING!

- **Do not attempt to seal a tire on the side of the vehicle closest to traffic. Pull far enough off the road to avoid the danger of being hit when using the Tire Service Kit.**
- **Do not use Tire Service Kit or drive the vehicle under the following circumstances:**
  - **If the puncture in the tire tread is approximately 1/4 inch (6 mm) or larger.**
  - **If the tire has any sidewall damage.**
  - **If the tire has any damage from driving with extremely low tire pressure.**
  - **If the tire has any damage from driving on a flat tire.**
  - **If the wheel has any damage.**
  - **If you are unsure of the condition of the tire or the wheel.**
- **Keep Tire Service Kit away from open flames or heat source.**
- **A loose Tire Service Kit thrown forward in a collision or hard stop could endanger the occupants of the vehicle. Always stow the Tire Service Kit in the place provided. Failure to follow these warnings can result**

(Continued)

WARNING! ***(Continued)***

in injuries that are serious or fatal to you, your passengers, and others around you.

- **Take care not to allow the contents of Tire Service Kit to come in contact with hair, eyes, or clothing. Tire Service Kit sealant is harmful if inhaled, swallowed, or absorbed through the skin. It causes skin, eye, and respiratory irritation. Flush immediately with plenty of water if there is any contact with eyes or skin. Change clothing as soon as possible, if there is any contact with clothing.**
- **Tire Service Kit Sealant solution contains latex. In case of an allergic reaction or rash, consult a physician immediately. Keep Tire Service Kit out of reach of children. If swallowed, rinse mouth immediately with plenty of water and drink plenty of water. Do not induce vomiting! Consult a physician immediately.**

Sealing A Tire With Tire Service Kit

(A) Whenever You Stop To Use Tire Service Kit:

1. Pull over to a safe location and turn on the vehicle's Hazard Warning flashers.

2. Verify that the valve stem (on the wheel with the deflated tire) is in a position that is near to the ground. This will allow the Tire Service Kit Hoses (3) and (5) to reach the valve stem and keep the Tire Service Kit flat on the ground. This will provide the best positioning of the kit when injecting the sealant into the deflated tire and running the air pump. Move the vehicle as necessary to place the valve stem in this position before proceeding.
3. Place the transmission in PARK (auto transmission) or in Gear (manual transmission) and place the ignition in the OFF position.
4. Apply the parking brake.

(B) Setting Up To Use Tire Service Kit:

1. Push in the Mode Select Knob (2) and turn to the Sealant Mode position.
2. Uncoil the Sealant Hose (3) and then remove the cap from the fitting at the end of the hose.
3. Place the Tire Service Kit flat on the ground next to the deflated tire.
4. Remove the cap from the valve stem and then screw the fitting at the end of the Sealant Hose (3) onto the valve stem.
5. Uncoil the Power Plug (7) and insert the plug into the vehicle's 12 Volt power outlet.

NOTE: Do not remove foreign objects (e.g., screws or nails) from the tire.

(C) Injecting Tire Service Kit Sealant Into The Deflated Tire:

- Always start the vehicle before turning ON the Tire Service Kit.

NOTE: Manual transmission vehicles must have the parking brake engaged and the gear selector in NEUTRAL.

- After pushing the Power Button (1), the sealant (white fluid) will flow from the Sealant Bottle (4) through the Sealant Hose (3) and into the tire.

NOTE: Sealant may leak out through the puncture in the tire.

If the sealant (white fluid) does not flow within 0 – 10 seconds through the Sealant Hose (3):

1. Push the Power Button (1) to turn Off the Tire Service Kit. Disconnect the Sealant Hose (3) from the valve stem. Make sure the valve stem is free of debris. Reconnect the Sealant Hose (3) to the valve stem. Check that the Mode

Select Knob (2) is in the Sealant Mode position and not Air Mode. Push the Power Button (1) to turn On the Tire Service Kit.

2. Connect the Power Plug (7) to a different 12 Volt power outlet in your vehicle or another vehicle, if available. Make sure the vehicle is running before turning ON the Tire Service Kit.

3. The Sealant Bottle (4) may be empty due to previous use. Call for assistance.

NOTE: If the Mode Select Knob (2) is on Air Mode and the pump is operating, air will dispense from the Air Pump Hose (5) only, not the Sealant Hose (3).

If the sealant (white fluid) does flow through the Sealant Hose (3):

1. Continue to operate the pump until sealant is no longer flowing through the hose (typically takes 30 - 70 seconds). As the sealant flows through the Sealant Hose (3), the Pressure Gauge (8) can read as high as 70 psi (4.8 Bar). The Pressure Gauge (8) will decrease quickly from approximately 70 psi (4.8 Bar) to the actual tire pressure when the Sealant Bottle (4) is empty.

2. The pump will start to inject air into the tire immediately after the Sealant Bottle (4) is empty. Continue to operate the pump and inflate the tire to the pressure indicated on the tire pressure label on the driver-side latch pillar (recommended pressure). Check the tire pressure by looking at the Pressure Gauge (8).

If the tire does not inflate to at least 26 psi (1.8 Bar) pressure within 15 minutes:

- The tire is too badly damaged. Do not attempt to drive the vehicle further. Call for assistance.

NOTE: If the tire becomes overinflated, push the Deflation Button to reduce the tire pressure to the recommended inflation pressure before continuing.

If the tire inflates to the recommended pressure or is at least 26 psi (1.8 Bar) pressure within 15 minutes:

1. Push the Power Button (1) to turn off the Tire Service Kit.

2. Remove the Speed Limit sticker from the top of the Sealant Bottle (4) and place the sticker on the instrument panel.

3. Immediately disconnect the Sealant Hose (3) from the valve stem, reinstall the cap on the fitting at the end of

the hose, and place the Tire Service Kit in the vehicle storage location. Quickly proceed to (D) "Drive Vehicle."

CAUTION!

- **The metal end fitting from Power Plug (8) may get hot after use, so it should be handled carefully.**
- **Failure to reinstall the cap on the fitting at the end of the Sealant Hose (6) can result in sealant contacting your skin, clothing, and the vehicle's interior. It can also result in sealant contacting internal Tire Service Kit components which may cause permanent damage to the kit.**

(D) Drive Vehicle:

Immediately after injecting sealant and inflating the tire, drive the vehicle 5 miles (8 km) or ten minutes to ensure distribution of the Tire Service Kit Sealant within the tire. Do not exceed 50 mph (80 km/h).

WARNING!

Tire Service Kit is not a permanent flat tire repair. Have the tire inspected and repaired or replaced after using Tire Service Kit. Do not exceed 50 mph (80 km/h) until the tire is repaired or replaced. Failure to follow this warning can result in injuries that are serious or fatal to you, your passengers, and others around you.

(E) After Driving:

Pull over to a safe location. Refer to "(A) Whenever You Stop To Use Tire Service Kit" before continuing.

1. Push in the Mode Select Knob (2) and turn to the Air Mode position.
2. Uncoil the power plug and insert the plug into the vehicle's 12 Volt power outlet.
3. Uncoil the Air Pump Hose (5) (black in color) and screw the fitting at the end of hose onto the valve stem.
4. Check the pressure in the tire by reading the Pressure Gauge (8).

If tire pressure is less than 19 psi (1.3 Bar):

The tire is too badly damaged. Do not attempt to drive the vehicle further. Call for assistance.

If the tire pressure is 19 psi (1.3 Bar) or higher:

1. Push the Power Button (1) to turn on Tire Service Kit and inflate the tire to the pressure indicated on the tire and loading information label on the driver-side door opening.

NOTE: If the tire becomes over-inflated, push the Deflation Button to reduce the tire pressure to the recommended inflation pressure before continuing.

2. Disconnect the Tire Service Kit from the valve stem, reinstall the cap on the valve stem and unplug from 12 Volt outlet.
3. Place the Tire Service Kit in its proper storage area in the vehicle.
4. Have the tire inspected and repaired or replaced at the earliest opportunity at an authorized dealer or tire service center.
5. Remove the Speed Limit sticker from the instrument panel after the tire has been repaired.
6. Replace the Sealant Bottle (4) and Sealant Hose (3) assembly at an authorized dealer as soon as possible. Refer to "(F) Sealant Bottle And Hose Replacement".

NOTE: When having the tire serviced, advise the authorized dealer or service center that the tire has been sealed using the Tire Service Kit.

(F) Sealant Bottle And Hose Replacement:

1. Uncoil the Sealant Hose (3) (clear in color).
2. Locate the red colored round Sealant Bottle release button at the lower right hand corner of the kit.
3. Push and hold the Sealant Bottle release button, then pull out the bottle holding the button.
4. Clean any remaining sealant from the Tire Service Kit housing.
5. Position the new Sealant Bottle (4) in the housing so that the Sealant Hose (3) aligns with the hose slot in the front of the housing. Push and hold the Sealant Bottle release button, then push the bottle into the housing by holding the button. An audible click will be heard indicating the bottle is locked into place. Release the button.

6. Verify that the cap is installed on the fitting at the end of the Sealant Hose (3) and return the hose to its storage area (located on top of the housing).
7. Return the Tire Service Kit to its storage location in the vehicle.

JUMP STARTING PROCEDURE (12 VOLT BATTERY ONLY)

If your vehicle has a discharged 12 Volt battery, it can be jump started using a set of jumper cables and a battery in another vehicle or by using a portable battery booster pack. Jump starting can be dangerous if done improperly so please follow the procedures in this section carefully.

NOTE: When using a portable battery booster pack, follow the manufacturer's operating instructions and precautions.

WARNING!

Do not attempt jump starting if the battery is frozen. It could rupture or explode and cause personal injury.

CAUTION!

Do not use a portable battery booster pack or any other booster source with a system voltage greater than 12 Volts or damage to the battery, starter motor, alternator or electrical system may occur.

Preparations For Jump Start

The battery in your vehicle is located in the underhood compartment under the beauty cover. To access the battery pull upward on the cover.

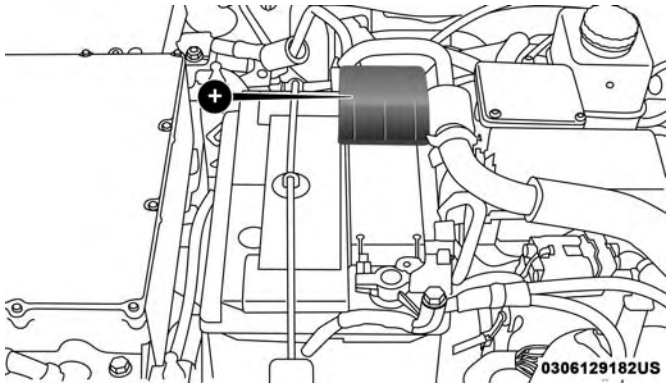

Positive Battery Post

WARNING!

- **Take care to avoid the radiator cooling fan whenever the hood is raised. It can start anytime the ignition switch is ON. You can be injured by moving fan blades.**
- **Remove any metal jewelry such as rings, watch bands and bracelets that could make an inadvertent electrical contact. You could be seriously injured.**
- **Batteries contain sulfuric acid that can burn your skin or eyes and generate hydrogen gas which is flammable and explosive. Keep open flames or sparks away from the battery.**

1. Apply the parking brake, place the transmission into PARK and turn the ignition to LOCK.
2. Turn off the heater, radio, and all unnecessary electrical accessories.
3. Remove the protective cover over the positive **(+)** battery post.
4. If using another vehicle to jump start the battery, park the vehicle within the jumper cables reach, apply the parking brake and make sure the ignition is OFF.

WARNING!

Do not allow vehicles to touch each other as this could establish a ground connection and personal injury could result.

Jump Starting Procedure

WARNING!

Failure to follow this jump starting procedure could result in personal injury or property damage due to battery explosion.

CAUTION!

Failure to follow these procedures could result in damage to the charging system of the booster vehicle or the discharged vehicle.

Connecting The Jumper Cables

1. Connect the positive **(+)** end of the jumper cable to the positive **(+)** post of the discharged vehicle.
2. Connect the opposite end of the positive **(+)** jumper cable to the positive **(+)** post of the booster battery.

3. Connect the negative end **(-)** of the jumper cable to the negative **(-)** post of the booster battery.
4. Connect the opposite end of the negative **(-)** jumper cable to a good vehicle ground (exposed metal part of the discharged vehicle underhood compartment) away from the battery.

WARNING!

Do not connect the jumper cable to the negative (-) post of the discharged battery. The resulting electrical spark could cause the battery to explode and could result in personal injury. Only use the specific ground point, do not use any other exposed metal parts.

5. Start the vehicle that has the booster battery, and allow it to idle for a few minutes. Then turn the key to the RUN position on the vehicle with the discharged battery.
6. Once the vehicle is started, remove the jumper cables in the reverse sequence:

Disconnecting The Jumper Cables

1. Disconnect the negative **(-)** jumper cable from the vehicle ground **(-)** of the vehicle with the discharged battery.
2. Disconnect the negative end **(-)** of the jumper cable from the negative **(-)** post of the booster battery.
3. Disconnect the opposite end of the positive **(+)** jumper cable from the positive **(+)** post of the booster battery.
4. Disconnect the positive **(+)** end of the jumper cable from the positive **(+)** post of the discharged vehicle.

If frequent jump starting is required to start your vehicle, you should have the battery and charging system inspected at an authorized dealer.

MANUAL PARK RELEASE

WARNING!

Always secure your vehicle by fully applying the parking brake before activating the Manual Park Release. Activating the Manual Park Release will allow your vehicle to roll away if it is not secured by the parking brake, or by proper connection to a tow vehicle. Activating the Manual Park Release on an unsecured vehicle could lead to serious injury or death for those in or around the vehicle.

In order to move the vehicle in cases where the transmission will not shift out of PARK (such as a dead battery), a Manual Park Release is available. If a dead 12 volt battery is the cause of the condition refer to "Jump Starting Procedure — 12 Volt Battery" before performing the Manual Park Release.

To perform the Manual Park Release follow these steps:

1. To prevent the vehicle from rolling unintentionally, firmly apply the parking brake.
2. If possible, raise the front driver's side of the vehicle to provide access to the transmission.
3. Working from underneath the vehicle, remove the black rubber plug from the front of the Park Module (a black canister mounted on the front of the transmission).
4. Using a T25 driver bit, rotate the Manual Park Release shaft (located just behind the rubber plug) clockwise, at least 20 turns, to release the Park Mechanism. The vehicle is now out of PARK and can be moved.

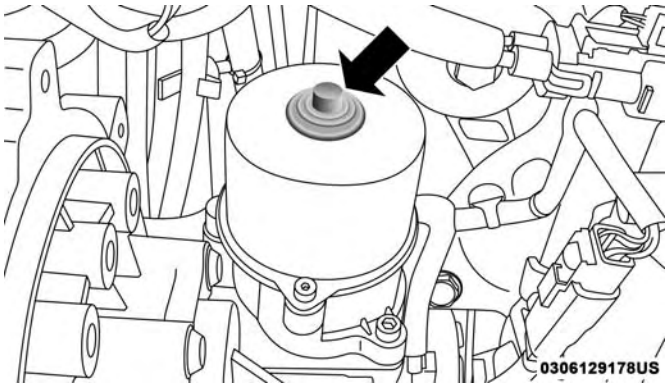

Manual Park Release Location

5. Reinstall the rubber plug.

6. Release the parking brake only when a driver is in the vehicle, or the vehicle is secured by other means. The Manual Park Release will be reset automatically once the vehicle is restarted.

FREEING A STUCK VEHICLE

If your vehicle becomes stuck in mud, sand or snow, it can often be moved using a rocking motion. Turn the steering wheel right and left to clear the area around the front wheels. Then, shift back and forth between DRIVE and REVERSE while gently pressing the accelerator. Use the least amount of accelerator pedal pressure that will maintain the rocking motion, without spinning the wheels.

NOTE: Push the "ESC Off" switch, to place the Electronic Stability Control (ESC) system in "Partial Off" mode, before rocking the vehicle. Refer to "Electronic Brake Control" in "Safety" for further information. Once the vehicle has been freed, push the "ESC Off" switch again to restore "ESC On" mode.

WARNING!

Fast spinning tires can be dangerous. Forces generated by excessive wheel speeds may cause damage, or even failure, of the axle and tires. A tire could explode and injure someone. Do not spin your vehicle's wheels faster than 30 mph (48 km/h) or for longer than 30 seconds continuously without stopping when you are stuck and do not let anyone near a spinning wheel, no matter what the speed.

CAUTION!

- **When "rocking" a stuck vehicle by shifting between DRIVE and REVERSE, do not spin the wheels faster than 15 mph (24 km/h), or drivetrain damage may result.**
- **Revving the vehicle or spinning the wheels too fast may lead to transmission overheating and failure. It can also damage the tires. Do not spin the wheels above 30 mph (48 km/h) while in gear (no transmission shifting occurring).**

TOWING A DISABLED VEHICLE

This section describes procedures for towing a disabled vehicle using a commercial towing service.

Towing Condition	Wheels OFF The Ground	Single-Speed Transmission
Flat Tow	NONE	**NOT ALLOWED**
Wheel Lift or Dolly Tow	Rear	**NOT ALLOWED**
	Front	OK
Flatbed	**ALL**	OK

This vehicle must be towed with the front wheels OFF the ground.

If you must use the accessories (wipers, defrosters, etc.) while being towed, the ignition must be in the ON/RUN mode.

If the ignition key is unavailable, or the vehicle's battery is discharged, see "Manual Park Release" within this section for instructions on shifting the transmission out of PARK in order to move the vehicle.

CAUTION!

- **Do not use sling type equipment when towing. Vehicle damage may occur.**
- **When securing the vehicle to a flat bed truck, do not attach to front or rear suspension components. Damage to your vehicle may result from improper towing.**

ENHANCED ACCIDENT RESPONSE SYSTEM (EARS)

This vehicle is equipped with an Enhanced Accident Response System.

Please refer to “Occupant Restraint Systems” in “Safety” for further information on the Enhanced Accident Response System (EARS) function.

EVENT DATA RECORDER (EDR)

This vehicle is equipped with an Event Data Recorder (EDR). The main purpose of an EDR is to record data that will assist in understanding how a vehicle’s systems performed under certain crash or near crash-like situations, such as an air bag deployment or hitting a road obstacle.

Please refer to “Occupant Restraint Systems” in “Safety” for further information on the Event Data Recorder (EDR).

SERVICING AND MAINTENANCE

CONTENTS

■ SCHEDULED SERVICING 211

□ Maintenance Plan 211

■ UNDERHOOD COMPARTMENT 214

□ Adding Washer Fluid 215

□ Maintenance-Free Battery 12 Volt 215

■ DEALER SERVICE 216

□ Power Electronics And Battery Thermal Management Systems 217

□ Power Electronics And Battery Thermal Management Systems — Coolant Level Check . .217

□ Power Electronics And Battery Thermal Management Systems — Cooling Pressure Caps 219

□ Selection Of Coolant 219

□ Adding Coolant 220

□ Power Electronics And Battery Thermal Management Systems — Drain, Flush And Refill 220

□ Disposal Of Used Power Electronics And Battery Thermal Management Systems Coolant 221

□ Points To Remember 221

□ Air Conditioner Maintenance 222

□ Body Lubrication 223

□ Windshield Wiper Blades 223

□ Brake System 225

■ RAISING THE VEHICLE 226

■ TIRES 226

□ Tire Safety Information 226

□ Tires — General Information 234

□ Tire Types 240

- Spare Tires — If Equipped 241
- Wheel And Wheel Trim Care 244
- Tire Chains (Traction Devices) 245
- Tire Rotation Recommendations 246

■ DEPARTMENT OF TRANSPORTATION UNIFORM TIRE QUALITY GRADES 247

- Treadwear 247
- Traction Grades 247
- Temperature Grades 248

■ STORING THE VEHICLE 248

■ BODYWORK 249

- Protection From Atmospheric Agents 249
- Body And Underbody Maintenance 249
- Preserving The Bodywork 249

■ INTERIORS 251

- Seats And Fabric Parts 251
- Plastic And Coated Parts. 251
- Leather Parts 252
- Glass Surfaces 252

SCHEDULED SERVICING

Once A Month Or Before A Trip:

- Check windshield washer fluid level
- Check the tire inflation pressures and look for unusual wear or damage
- Check the fluid levels of the coolant reservoirs and brake master cylinder
- Check function of all interior and exterior lights

Maintenance Plan

Required Maintenance Intervals

Refer to the maintenance schedules on the following page for the required maintenance intervals.

At Every Service Interval:
• Rotate the tires. **Rotate at the first sign of irregular wear.**
• Inspect brake pads, shoes, rotors, drums, and hoses.
• Inspect battery cooling system protection and hoses.
• Check and adjust hand brake.

Refer to the Maintenance Plan on the following pages for the required maintenance intervals.

Mileage or time passed (whichever comes first)	20,000	30,000	40,000	50,000	60,000	70,000	80,000	90,000	100,000	110,000	120,000	130,000	140,000	150,000
Or Years:	**2**	**3**	**4**	**5**	**6**	**7**	**8**	**9**	**10**	**11**	**12**	**13**	**14**	**15**
Or Kilometers:	32,000	48,000	64,000	80,000	96,000	112,000	128,000	144,000	160,000	176,000	192,000	208,000	224,000	240,000
Additional Inspections														
Inspect the CV joints.		X			X			X			X			X
Inspect front suspension, tie rod ends and boot seals, and replace if necessary.	X		X		X		X		X		X		X	
Inspect the brake linings. Replace as necessary.	X		X		X		X		X		X		X	
Inspect parking brake function. Adjust as necessary.	X		X		X		X		X		X		X	
Additional Maintenance														
Replace cabin air filter.	X		X		X		X		X		X		X	
Clean and lube sun roof tracks.	X	X	X	X	X	X	X	X	X	X	X	X	X	X
Flush and replace the coolant in the Power Electronics and Battery Thermal Loop Systems at 10 years or 150,000 miles (240,000 km) whichever comes first.									X					X

WARNING!

- **You can be badly injured working on or around a motor vehicle. Do only service work for which you have the knowledge and the right equipment. If you have any doubt about your ability to perform a service job, take your vehicle to a competent mechanic.**
- **Failure to properly inspect and maintain your vehicle could result in a component malfunction and effect vehicle handling and performance. This could cause an accident.**

UNDERHOOD COMPARTMENT

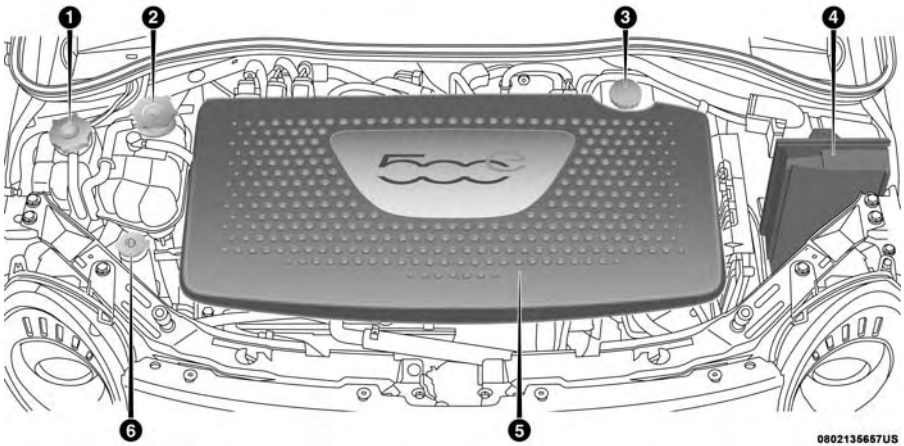

1 — Battery Thermal Coolant Reservoir
2 — Power Electronics Coolant Reservoir
3 — Brake Fluid Reservoir
4 — Fuses
5 — 12V Battery
6 — Washer Fluid Reservoir

Adding Washer Fluid

The windshield washer fluid reservoir is located in the underhood compartment, and the fluid level should be checked at regular intervals. Fill the reservoir with windshield washer solvent (not coolant/ antifreeze). Refer to "Underhood Compartment" in this section for further information.

WARNING!

Commercially available windshield washer solvents are flammable. They could ignite and burn you. Care must be exercised when filling or working around the washer solution.

Maintenance-Free Battery 12 Volt

Your vehicle is equipped with a maintenance-free 12 Volt battery. You will never have to add water, nor is periodic maintenance required.

WARNING!

- **Battery fluid is a corrosive acid solution and can burn or even blind you. Do not allow battery fluid to**

(Continued)

WARNING! ***(Continued)***

contact your eyes, skin, or clothing. Do not lean over a battery when attaching clamps. If acid splashes in eyes or on skin, flush the area immediately with large amounts of water. Refer to "Jump Starting Procedure" in "In Case Of Emergency" for further information.

- **Battery gas is flammable and explosive. Keep flame or sparks away from the battery. Do not use a booster battery or any other booster source with an output greater than 12 Volts. Do not allow cable clamps to touch each other.**
- **Battery posts, terminals, and related accessories contain lead and lead compounds. Wash hands after handling.**
- **The battery in this vehicle has a vent hose that should not be disconnected and should only be replaced with a battery of the same type (vented).**

CAUTION!

- **It is essential when replacing the cables on the battery that the positive cable is attached to the**

(Continued)

CAUTION! *(Continued)*

positive post and the negative cable is attached to the negative post. Battery posts are marked positive (+) and negative (-) and are identified on the battery case. Cable clamps should be tight on the terminal posts and free of corrosion.

- **If a 12 Volt Low Voltage Battery System "fast charger" is used while the battery is in the vehicle, disconnect both vehicle battery cables before connecting the charger to the battery. Do not use a "fast charger" to provide starting voltage.**

DEALER SERVICE

WARNING!

Your vehicle has both a high voltage DC and AC system as well as a 12 Volt system. DC and AC high voltage are both extremely dangerous and can cause severe burns, electric shock, serious injury or even death. In order to avoid personal injuries:

- **DO NOT TOUCH THE HIGH VOLTAGE CABLES (ORANGE COLORED) AND/OR THE CONNECTORS.**

(Continued)

WARNING! *(Continued)*

- **Follow all Caution and Warning labels attached to the High Voltage components.**
- **Do not remove or replace any of the 500e System components. All replacement or repairs of 500e System components should be performed by a factory-trained technician at an authorized dealer.**

The pages that follow contain the **required** maintenance services determined by the engineers who designed your vehicle.

Besides those maintenance items specified in the fixed maintenance schedule, there are other components which may require servicing or replacement in the future.

CAUTION!

- **Failure to properly maintain your vehicle or perform repairs and service when necessary could result in more costly repairs, damage to other components or negatively impact vehicle performance. Immediately have potential malfunctions examined by an authorized dealer or qualified repair center.**

(Continued)

CAUTION! ***(Continued)***

- **Your vehicle has been built with improved fluids that protect the performance and durability of your vehicle and also allow extended maintenance intervals. Do not use chemical flushes in these components as the chemicals can damage them. Such damage is not covered by the New Vehicle Limited Warranty. If a flush is needed because of component malfunction, use only the specified fluid for the flushing procedure.**

Power Electronics And Battery Thermal Management Systems

The Power Electronics and Battery Thermal Management Systems are completely separate and designed to regulate temperature for the high voltage battery and the electric components.

Power Electronics And Battery Thermal Management Systems — Coolant Level Check

The coolant expansion bottles provides a quick visual method for determining that the coolant level is adequate. With the vehicle off and coolant at ambient temperature, the level of the coolant (antifreeze) in the bottles should be between the bottom and top lines marked "MIN-MAX FILL RANGE".

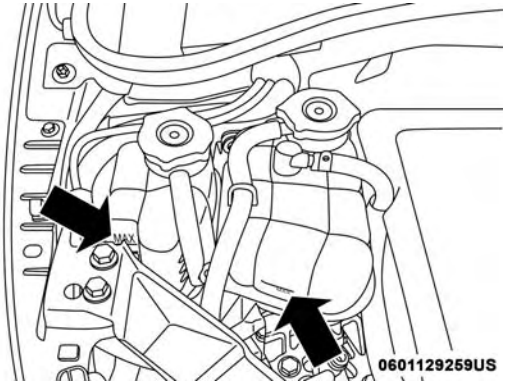

Coolant MIN/MAX

As long as the vehicle operating temperature is satisfactory, the coolant bottles need only be checked once a month.

When additional coolant (antifreeze) is needed to maintain the proper level, it should be added to the coolant bottles. Do not overfill.

Check the Power Electronics and Battery Thermal Management Systems coolant (antifreeze) protection every 12 months (before the onset of freezing weather, where applicable).

Maintain coolant (antifreeze) concentration at a minimum of 50% Mopar Antifreeze/Coolant 10 Year/150,000 Mile Formula OAT (Organic Additive Technology) and distilled/deionized water for proper corrosion protection.

Check the coolant bottles tubing for brittle rubber, cracking, tears, cuts and tightness of the connection at the bottles and radiator. Inspect the entire system for leaks.

Check the front of the A/C condenser for any accumulation of bugs, leaves, etc. If dirty, clean by gently spraying water from a garden hose vertically down the face of the condenser.

NOTE: DO NOT REMOVE THE COOLANT PRESSURE CAP WHEN THE COOLING SYSTEM IS HOT.

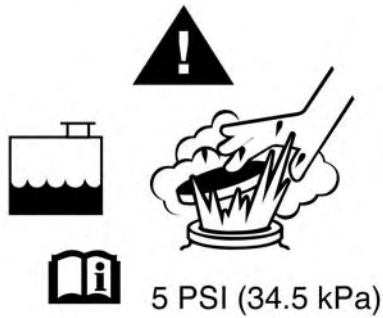

0726092434US

WARNING!

You or others can be badly burned by hot coolant (antifreeze) or steam from your radiator. If you see or hear steam coming from under the hood, do not open the hood until the radiator has had time to cool. Never try to open a cooling system pressure cap when the radiator is hot.

Power Electronics And Battery Thermal Management Systems — Cooling Pressure Caps

The caps must be fully tightened to prevent loss of coolant (antifreeze).

The caps should be inspected and cleaned if there is any accumulation of foreign material on the sealing surfaces.

NOTE:

- The pressure caps on the reservoirs are unique and rated at 5 PSI (34.5 kPa).
- Use only Mopar replacement parts.

WARNING!

- **The warning words "DO NOT OPEN HOT" on the cooling system pressure cap are a safety precaution. Never add coolant (antifreeze) when the cooling system is overheated. Do not loosen or remove the cap to cool an overheated cooling system. Heat causes pressure to build up in the cooling system. To prevent scalding or injury, do not remove the pressure cap while the system is hot or under pressure.**
- **Do not use a pressure cap other than the one specified for your vehicle. Personal injury or vehicle damage may result.**

Selection Of Coolant

Refer to "Fluids And Lubricants" in "Technical Specifications" for further information.

CAUTION!

- **Mixing of coolant (antifreeze) other than specified Organic Additive Technology (OAT) coolant (antifreeze), may result in cooling system damage and may decrease corrosion protection. Organic Additive Technology (OAT) coolant is different and should not be mixed with Hybrid Organic Additive Technology (HOAT) coolant (antifreeze). If a non-OAT coolant (antifreeze) is introduced into the cooling system in an emergency, it should be replaced with the specified coolant (antifreeze) as soon as possible.**
- **Do not use water alone or alcohol-based coolant (antifreeze) products. Do not use additional rust inhibitors or antirust products, as they may not be compatible with the radiator coolant and may plug the radiator.**
- **This vehicle has not been designed for use with propylene glycol-based coolant (antifreeze). Use of propylene glycol-based coolant (antifreeze) is not recommended.**

Adding Coolant

Your vehicle has been built with cooling systems that allow extended maintenance intervals. This coolant (antifreeze) can be used up to ten years or 150,000 miles (240,000 km) before replacement. To prevent reducing this extended maintenance period, it is important that you use the same coolant (antifreeze) throughout the life of your vehicle.

Please review these recommendations for using Organic Additive Technology (OAT) coolant (antifreeze).

When adding coolant (antifreeze):

- The manufacturer recommends using Mopar Antifreeze/Coolant 10 Year/150,000 Mile (240,000 km) Formula OAT (Organic Additive Technology).
- Mix a minimum solution of 50% OAT coolant (antifreeze) and distilled water. Use higher concentrations (not to exceed 70%) if temperatures below -34ºF (-37ºC) are anticipated.
- Use only high purity water such as distilled or deionized water when mixing the water and coolant (antifreeze) solution. The use of lower quality water will reduce the amount of corrosion protection in the cooling systems.

Please note that it is the owner's responsibility to maintain the proper level of protection against freezing according to the temperatures occurring in the area where the vehicle is operated.

NOTE: Mixing coolant (antifreeze) types will decrease the life of the Power Electronics and Battery Thermal Management Systems coolant (antifreeze) and will require more frequent coolant (antifreeze) changes.

Power Electronics And Battery Thermal Management Systems — Drain, Flush And Refill

Refer to "Scheduled Servicing" for the proper maintenance intervals.

If the coolant (antifreeze) is dirty or contains a considerable amount of sediment, clean and flush with a reliable cooling system cleaner. Follow with a thorough rinsing to remove all deposits and chemicals. Properly dispose of old coolant (antifreeze) solution.

CAUTION!

It is recommended to have the cooling systems serviced at your authorized dealer. Failure to do so could result in poor cooling system performance and/or vehicle damage.

Disposal Of Used Power Electronics And Battery Thermal Management Systems Coolant

Used antifreeze is a regulated substance requiring proper disposal. Check with your local authorities to determine the disposal rules for your community. To prevent ingestion by animals or children, do not store antifreeze in open containers or allow it to remain in puddles on the ground. If ingested by a child, contact a physician immediately. Clean up any ground spills immediately.

Points To Remember

WARNING!

- **Turn vehicle OFF and disconnect the fan motor lead before working near the radiator cooling fan.**
- **You or others can be badly burned by hot coolant (antifreeze) or steam from your radiator. If you see or hear steam coming from under the hood, do not open the hood until the radiator has had time to cool. Never open a cooling system pressure cap when the radiator or coolant bottle is hot.**
- **Do not put your hands, tools, clothing, and jewelry near the radiator cooling fan. The fan may start at any time, whether the ignition is on or off.**

If an examination of your underhood compartment shows no evidence of cooler or hose leaks, the vehicle may be safely driven.

- Do not overfill the coolant recovery bottles.
- Check coolant (antifreeze) freeze point in the coolant recovery bottles. If coolant (antifreeze) needs to be added, contents of coolant recovery bottles must also be protected against freezing.

- If frequent coolant (antifreeze) additions are required, or if the level in the coolant recovery bottles does not drop when the powertrain cools, the cooling system should be pressure tested for leaks.
- Maintain coolant (antifreeze) concentration at 50% OAT coolant (antifreeze) (minimum) and distilled/deionized water for proper corrosion protection of your powertrain which contains aluminum components.
- Make sure that the coolant control systems recovery bottles overflow hoses are not kinked or obstructed.
- Keep the front of the coolant control systems clean. If your vehicle is equipped with air conditioning, keep the front of the condenser clean.

Air Conditioner Maintenance

For best possible performance, your air conditioner should be checked and serviced by an authorized dealer at the start of each warm season. This service should include cleaning of the condenser fins and air conditioning performance tests.

WARNING!

- **Use only refrigerants and compressor lubricants approved by the manufacturer for your air conditioning system. Some unapproved refrigerants are flammable and can explode, injuring you. Other unapproved refrigerants or lubricants can cause the system to fail, requiring costly repairs. Refer to Warranty Information Book, located in your owner's information kit, for further warranty information.**
- **The air conditioning system contains refrigerant under high pressure. To avoid risk of personal injury or damage to the system, adding refrigerant or any repair requiring lines to be disconnected should be done by an experienced technician.**

CAUTION!

Do not use chemical flushes in your air conditioning system as the chemicals can damage your air conditioning components. Such damage is not covered by the New Vehicle Limited Warranty.

Body Lubrication

Locks and all body pivot points, including such items as seat tracks, door hinge pivot points and rollers, liftgate, tailgate, decklid, sliding doors and hood hinges, should be lubricated periodically with a lithium based grease, such as Mopar Spray White Lube to assure quiet, easy operation and to protect against rust and wear. Prior to the application of any lubricant, the parts concerned should be wiped clean to remove dust and grit; after lubricating excess oil and grease should be removed. Particular attention should also be given to hood latching components to ensure proper function. When performing other underhood services, the hood latch, release mechanism and safety catch should be cleaned and lubricated.

The external lock cylinders should be lubricated twice a year, preferably in the Fall and Spring. Apply a small amount of a high quality lubricant, such as Mopar Lock Cylinder Lubricant directly into the lock cylinder.

Windshield Wiper Blades

Clean the rubber edges of the wiper blades and the windshield periodically with a sponge or soft cloth and a mild nonabrasive cleaner. This will remove accumulations of salt or road film.

Operation of the wipers on dry glass for long periods may cause deterioration of the wiper blades. Always use washer fluid when using the wipers to remove salt or dirt from a dry windshield.

Avoid using the wiper blades to remove frost or ice from the windshield. Keep the blade rubber out of contact with petroleum products such as engine oil, gasoline, etc.

NOTE: Life expectancy of wiper blades varies depending on geographical area and frequency of use. Poor performance of blades may be present with chattering, marks, water lines or wet spots. If any of these conditions are present, clean the wiper blades or replace as necessary.

The wiper blades and wiper arms should be inspected periodically, not just when wiper performance problems are experienced. This inspection should include the following points:

- Wear or uneven edges
- Foreign material
- Hardening or cracking
- Deformation or fatigue

If a wiper blade or wiper arm is damaged, replace the affected wiper arm or blade with a new unit. Do not attempt to repair a wiper arm or blade that is damaged.

Rear Wiper Blade Removal/Installation

1. Lift the pivot cap on the rear wiper arm upward, this will allow the rear wiper blade to be raised off of the liftgate glass.

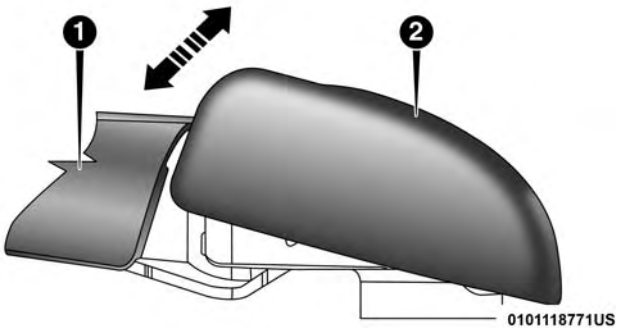

Lifting The Pivot Cap

1 — Wiper Arm
2 — Pivot Cap

NOTE: The rear wiper arm cannot be raised fully upward unless the pivot cap is raised first.

2. Lift the rear wiper arm upward to raise the wiper blade off of the liftgate glass.
3. Grab the bottom of the wiper blade and rotate it forward to unsnap the blade pivot pin from the wiper blade holder.

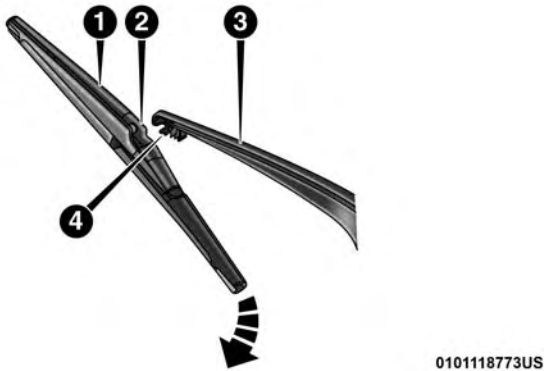

Removing The Wiper Blade

1 — Wiper Blade
2 — Blade Pivot Pin
3 — Wiper Arm
4 — Wiper Blade Holder

4. Install the wiper blade pivot pin into the wiper blade holder at the end of the wiper arm, and firmly press the wiper blade until it snaps into place.
5. Lower the wiper blade and snap the pivot cap into place.

Brake System

In order to assure brake system performance, all brake system components should be inspected periodically. Refer to the "Maintenance Plan" in this section for the proper maintenance intervals.

WARNING!

Riding the brakes can lead to brake failure and possibly a collision. Driving with your foot resting or riding on the brake pedal can result in abnormally high brake temperatures, excessive lining wear, and possible brake damage. You would not have your full braking capacity in an emergency.

Brake Master Cylinder

The fluid in the master cylinder should be checked when performing under hood services or immediately if the "Brake Warning Light" is illuminated.

Be sure to clean the top of the master cylinder area before removing the cap. If necessary, add fluid to bring the fluid level up to the requirements described on the brake fluid reservoir. With disc brakes, fluid level can be expected to fall as the brake pads wear. Brake fluid level should be checked when pads are replaced. However, low fluid level may be caused by a leak and a checkup may be needed.

Use only manufacturer's recommended brake fluid. Refer to "Fluids And Lubricants" in "Technical Specifications" for further information.

WARNING!

- **Use only manufacturer's recommended brake fluid. Refer to "Fluids And Lubricants" in "Technical Specifications" for further information. Using the wrong type of brake fluid can severely damage your brake system and/or impair its performance. The proper type of brake fluid for your vehicle is also identified on the original factory installed hydraulic master cylinder reservoir.**
- **To avoid contamination from foreign matter or moisture, use only new brake fluid or fluid that has been**

(Continued)

WARNING! *(Continued)*

in a tightly closed container. Keep the master cylinder reservoir cap secured at all times. Brake fluid in a open container absorbs moisture from the air resulting in a lower boiling point. This may cause it to boil unexpectedly during hard or prolonged braking, resulting in sudden brake failure. This could result in a collision.

- **Overfilling the brake fluid reservoir can result in spilling brake fluid on hot powertrain parts, causing the brake fluid to catch fire. Brake fluid can also damage painted and vinyl surfaces, care should be taken to avoid its contact with these surfaces.**
- **Do not allow petroleum based fluid to contaminate the brake fluid. Brake seal components could be damaged, causing partial or complete brake failure. This could result in a collision.**

RAISING THE VEHICLE

In the case where it is necessary to raise the vehicle, go to an authorized dealer or service station.

TIRES

Tire Safety Information

Tire safety information will cover aspects of the following information: Tire Markings, Tire Identification Numbers, Tire Terminology and Definitions, Tire Pressures, and Tire Loading.

Tire Markings

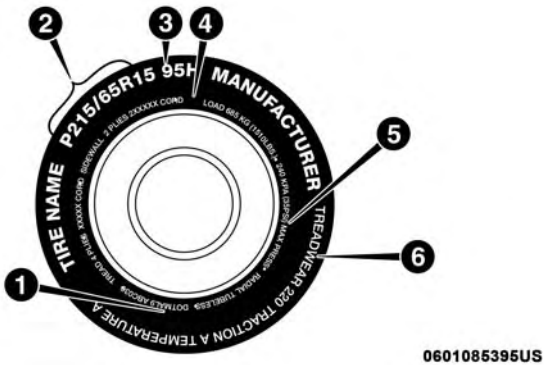

Tire Markings

1 — U.S. DOT Safety Standards Code (TIN)	4 — Maximum Load
2 — Size Designation	5 — Maximum Pressure
3 — Service Description	6 — Treadwear, Traction and Temperature Grades

NOTE:

- P (Passenger) — Metric tire sizing is based on U.S. design standards. P-Metric tires have the letter "P" molded into the sidewall preceding the size designation. Example: P215/65R15 95H.
- European — Metric tire sizing is based on European design standards. Tires designed to this standard have the tire size molded into the sidewall beginning with the section width. The letter "P" is absent from this tire size designation. Example: 215/65R15 96H.
- LT (Light Truck) — Metric tire sizing is based on U.S. design standards. The size designation for LT-Metric tires is the same as for P-Metric tires except for the letters "LT" that are molded into the sidewall preceding the size designation. Example: LT235/85R16.
- Temporary spare tires are designed for temporary emergency use only. Temporary high pressure compact spare tires have the letter "T" or "S" molded into the sidewall preceding the size designation. Example: T145/80D18 103M.
- High flotation tire sizing is based on U.S. design standards and it begins with the tire diameter molded into the sidewall. Example: 31x10.5 R15 LT.

Tire Identification Number (TIN)

The TIN may be found on one or both sides of the tire; however, the date code may only be on one side. Tires with white sidewalls will have the full TIN, including the date code, located on the white sidewall side of the tire. Look for the TIN on the outboard side of black sidewall tires as mounted on the vehicle. If the TIN is not found on the outboard side, then you will find it on the inboard side of the tire.

EXAMPLE:
DOT MA L9 ABCD 0301
DOT = Department of Transportation – This symbol certifies that the tire is in compliance with the U.S. Department of Transportation tire safety standards and is approved for highway use
MA = Code representing the tire manufacturing location (two digits)
L9 = Code representing the tire size (two digits)
ABCD = Code used by the tire manufacturer (one to four digits)
03 = Number representing the week in which the tire was manufactured (two digits) – 03 means the 3rd week
01 = Number representing the year in which the tire was manufactured (two digits) – 01 means the year 2001 – Prior to July 2000, tire manufacturers were only required to have one number to represent the year in which the tire was manufactured. Example: 031 could represent the 3rd week of 1981 or 1991

Tire Terminology And Definitions

Term	Definition
B-Pillar	The vehicle B-Pillar is the structural member of the body located behind the front door.
Cold Tire Inflation Pressure	Cold tire inflation pressure is defined as the tire pressure after the vehicle has not been driven for at least three hours, or driven less than 1 mile (1.6 km) after sitting for a minimum of three hours. Inflation pressure is measured in units of PSI (pounds per square inch) or kPa (kilopascals).
Maximum Inflation Pressure	The maximum inflation pressure is the maximum permissible cold tire inflation pressure for this tire. The maximum inflation pressure is molded into the sidewall.
Recommended Cold Tire Inflation Pressure	Vehicle manufacturer's recommended cold tire inflation pressure as shown on the tire placard.
Tire Placard	A label permanently attached to the vehicle describing the vehicle's loading capacity, the original equipment tire sizes and the recommended cold tire inflation pressures.

Tire Loading And Tire Pressure

NOTE: The proper cold tire inflation pressure is listed on the driver's side B-Pillar or the rear edge of the driver's side door.

Check the inflation pressure of each tire, including the spare tire (if equipped), at least monthly and inflate to the recommended pressure for your vehicle.

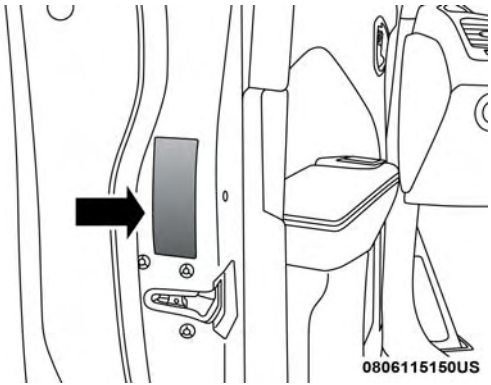

Example Tire Placard Location (Door)

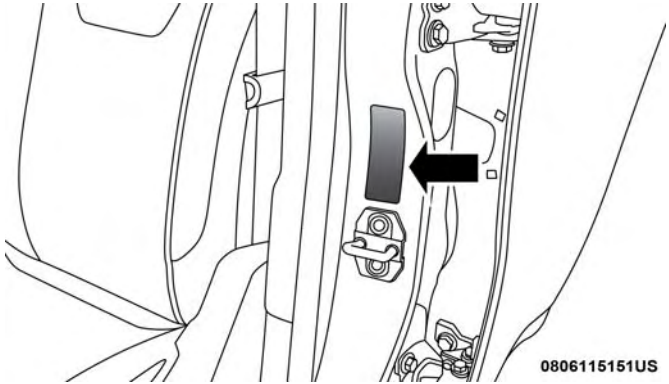

Example Tire Placard Location (B-Pillar)

Tire And Loading Information Placard

Tire And Loading Information Placard

This placard tells you important information about the:

1. Number of people that can be carried in the vehicle.
2. Total weight your vehicle can carry.
3. Tire size designed for your vehicle.
4. Cold tire inflation pressures for the front, rear, and spare tires.

Loading

The vehicle maximum load on the tire must not exceed the load carrying capacity of the tire on your vehicle. You will not exceed the tire's load carrying capacity if you adhere to the loading conditions, tire size, and cold tire inflation pressures specified on the Tire and Loading Information placard in "Vehicle Loading" in the "Starting And Operating" section of this manual.

NOTE: Under a maximum loaded vehicle condition, gross axle weight ratings (GAWRs) for the front and rear axles must not be exceeded.

For further information on GAWRs, vehicle loading, and trailer towing, refer to "Vehicle Loading" in the "Starting And Operating" section of this manual.

To determine the maximum loading conditions of your vehicle, locate the statement "The combined weight of occupants and cargo should never exceed XXX kg or XXX lbs" on the Tire and Loading Information placard. The combined weight of occupants, cargo/luggage and trailer tongue weight (if applicable) should never exceed the weight referenced here.

Steps For Determining Correct Load Limit—

(1) Locate the statement "The combined weight of occupants and cargo should never exceed XXX kg or XXX lbs." on your vehicle's placard.

(2) Determine the combined weight of the driver and passengers that will be riding in your vehicle.

(3) Subtract the combined weight of the driver and passengers from XXX kg or XXX lbs.

(4) The resulting figure equals the available amount of cargo and luggage load capacity. For example, if "XXX" amount equals 1400 lbs. and there will be five 150 lb passengers in your vehicle, the amount of available cargo and luggage load capacity is 650 lbs. (1400-750 (5x150) = 650 lbs.)

(5) Determine the combined weight of luggage and cargo being loaded on the vehicle. That weight may not safely exceed the available cargo and luggage load capacity calculated in Step 4.

(6) If your vehicle will be towing a trailer, load from your trailer will be transferred to your vehicle. Consult this manual to determine how this reduces the available cargo and luggage load capacity of your vehicle.

Metric Example For Load Limit

For example, if "XXX" amount equals 635 kg and there will be five 68 kg passengers in your vehicle, the amount of available cargo and luggage load capacity is 295 kg (635-340 (5x68) = 295 kg) as shown in step 4.

NOTE:

- If your vehicle will be towing a trailer, load from your trailer will be transferred to your vehicle. The following table shows examples on how to calculate total load, cargo/luggage, and towing capacities of your vehicle with varying seating configurations and number and size of occupants. This table is for illustration purposes only and may not be accurate for the seating and load carry capacity of your vehicle.
- For the following example, the combined weight of occupants and cargo should never exceed 865 lbs (392 kg).

Occupants			Combined weight of occupants and cargo from Tire Placard	MINUS	Combined Occupant's weight	=	AVAILABLE Cargo/Luggage and Trailer Tongue Weight
TOTAL	FRONT	REAR					
EXAMPLE 1							
5	2	3	865 lbs	minus	Occupant 1: 200 lbs Occupant 2: 130 lbs Occupant 3: 160 lbs Occupant 4: 100 lbs Occupant 5: 80 lbs TOTAL WEIGHT: 670 lbs 670 lbs	=	195 lbs
EXAMPLE 2							
3	2	1	865 lbs	minus	Occupant 1: 210 lbs Occupant 2: 180 lbs Occupant 3: 150 lbs TOTAL WEIGHT: 540 lbs 540 lbs	=	325 lbs
EXAMPLE 3							
2	2	0	865 lbs	minus	Occupant 1: 200 lbs Occupant 2: 200 lbs TOTAL WEIGHT: 400 lbs 400 lbs	=	465 lbs

EXAMPLE

811a4d11

WARNING!

Overloading of your tires is dangerous. Overloading can cause tire failure, affect vehicle handling, and increase your stopping distance. Use tires of the recommended load capacity for your vehicle. Never overload them.

Tires — General Information

Tire Pressure

Proper tire inflation pressure is essential to the safe and satisfactory operation of your vehicle. Four primary areas are affected by improper tire pressure:

- Safety and Vehicle Stability
- Energy Consumption
- Tread Wear
- Ride Comfort

Safety

WARNING!

- **Improperly inflated tires are dangerous and can cause collisions.**
- **Underinflation increases tire flexing and can result in overheating and tire failure.**
- **Overinflation reduces a tire's ability to cushion shock. Objects on the road and chuckholes can cause damage that result in tire failure.**

(Continued)

WARNING! *(Continued)*

- **Overinflated or underinflated tires can affect vehicle handling and can fail suddenly, resulting in loss of vehicle control.**
- **Unequal tire pressures can cause steering problems. You could lose control of your vehicle.**
- **Unequal tire pressures from one side of the vehicle to the other can cause the vehicle to drift to the right or left.**
- **Always drive with each tire inflated to the recommended cold tire inflation pressure.**

Both under-inflation and over-inflation affect the stability of the vehicle and can produce a feeling of sluggish response or over responsiveness in the steering.

NOTE:

- Unequal tire pressures from side to side may cause erratic and unpredictable steering response.
- Unequal tire pressure from side to side may cause the vehicle to drift left or right.

Battery Consumption

Underinflated tires will increase tire rolling resistance resulting in higher battery charge consumption.

Tread Wear

Improper cold tire inflation pressures can cause abnormal wear patterns and reduced tread life, resulting in the need for earlier tire replacement.

Ride Comfort And Vehicle Stability

Proper tire inflation contributes to a comfortable ride. Over-inflation produces a jarring and uncomfortable ride.

Tire Inflation Pressures

The proper cold tire inflation pressure is listed on the driver's side B-Pillar or rear edge of the driver's side door.

At least once a month:

- Check and adjust tire pressure with a good quality pocket-type pressure gauge. Do not make a visual judgement when determining proper inflation. Tires may look properly inflated even when they are under-inflated.
- Inspect tires for signs of tire wear or visible damage.

CAUTION!

After inspecting or adjusting the tire pressure, always reinstall the valve stem cap. This will prevent moisture and dirt from entering the valve stem, which could damage the valve stem.

Inflation pressures specified on the placard are always "cold tire inflation pressure". Cold tire inflation pressure is defined as the tire pressure after the vehicle has not been driven for at least three hours, or driven less than 1 mile (1.6 km) after sitting for a minimum of three hours. The cold tire inflation pressure must not exceed the maximum inflation pressure molded into the tire sidewall.

Check tire pressures more often if subject to a wide range of outdoor temperatures, as tire pressures vary with temperature changes.

Tire pressures change by approximately 1 psi (7 kPa) per 12°F (7°C) of air temperature change. Keep this in mind when checking tire pressure inside a garage, especially in the Winter.

Example: If garage temperature = 68°F (20°C) and the outside temperature = 32°F (0°C) then the cold tire inflation

pressure should be increased by 3 psi (21 kPa), which equals 1 psi (7 kPa) for every 12°F (7°C) for this outside temperature condition.

Tire pressure may increase from 2 to 6 psi (13 to 40 kPa) during operation. DO NOT reduce this normal pressure build up or your tire pressure will be too low.

Tire Pressures For High Speed Operation

The manufacturer advocates driving at safe speeds and within posted speed limits. Where speed limits or conditions are such that the vehicle can be driven at high speeds, maintaining correct tire inflation pressure is very important. Increased tire pressure and reduced vehicle loading may be required for high-speed vehicle operation. Refer to an authorized tire dealer or original equipment vehicle dealer for recommended safe operating speeds, loading and cold tire inflation pressures.

WARNING!

High speed driving with your vehicle under maximum load is dangerous. The added strain on your tires could cause them to fail. You could have a serious collision. Do not drive a vehicle loaded to the maximum capacity at continuous speeds above 75 mph (120 km/h).

Radial Ply Tires

WARNING!

Combining radial ply tires with other types of tires on your vehicle will cause your vehicle to handle poorly. The instability could cause a collision. Always use radial ply tires in sets of four. Never combine them with other types of tires.

Tire Repair

If your tire becomes damaged, it may be repaired if it meets the following criteria:

- The tire has not been driven on when flat.
- The damage is only on the tread section of your tire (sidewall damage is not repairable).
- The puncture is no greater than a ¼ of an inch (6 mm).

Consult an authorized tire dealer for tire repairs and additional information.

Damaged Run Flat tires, or Run Flat tires that have experienced a loss of pressure should be replaced immediately with another Run Flat tire of identical size and service

description (Load Index and Speed Symbol). Replace the tire pressure sensor as well as it is not designed to be reused.

Run Flat Tires — If Equipped

Run Flat tires allow you the capability to drive 50 miles (80 km) at 50 mph (80 km/h) after a rapid loss of inflation pressure. This rapid loss of inflation is referred to as the Run Flat mode. A Run Flat mode occurs when the tire inflation pressure is of/or below 14 psi (96 kPa). Once a Run Flat tire reaches the run flat mode it has limited driving capabilities and needs to be replaced immediately. A Run Flat tire is not repairable. When a run flat tire is changed after driving with underinflated tire condition, please replace the TPM sensor as it is not designed to be reused when driven under run flat mode (14 psi (96 kPa)) condition.

NOTE: TPM Sensor must be replaced after driving the vehicle on a flat tire condition.

It is not recommended driving a vehicle loaded at full capacity or to tow a trailer while a tire is in the run flat mode.

See the tire pressure monitoring section for more information.

Tire Spinning

When stuck in mud, sand, snow, or ice conditions, do not spin your vehicle's wheels above 30 mph (48 km/h) or for longer than 30 seconds continuously without stopping.

Refer to "Freeing A Stuck Vehicle" in "In Case Of Emergency" for further information.

WARNING!

Fast spinning tires can be dangerous. Forces generated by excessive wheel speeds may cause tire damage or failure. A tire could explode and injure someone. Do not spin your vehicle's wheels faster than 30 mph (48 km/h) for more than 30 seconds continuously when you are stuck, and do not let anyone near a spinning wheel, no matter what the speed.

Tread Wear Indicators

Tread wear indicators are in the original equipment tires to help you in determining when your tires should be replaced.

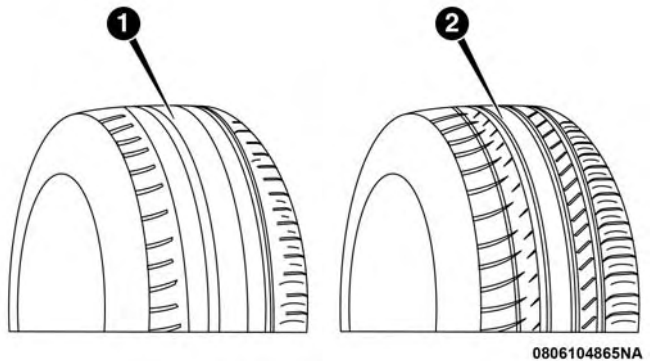

Tire Tread

1 — Worn Tire
2 — New Tire

These indicators are molded into the bottom of the tread grooves. They will appear as bands when the tread depth becomes a 1/16 of an inch (1.6 mm). When the tread is worn to the tread wear indicators, the tire should be replaced.

Refer to “Replacement Tires” in this section for further information.

Life Of Tire

The service life of a tire is dependent upon varying factors including, but not limited to:

- Driving style.
- Tire pressure - Improper cold tire inflation pressures can cause uneven wear patterns to develop across the tire tread. These abnormal wear patterns will reduce tread life, resulting in the need for earlier tire replacement.
- Distance driven.
- Performance tires, tires with a speed rating of V or higher, and Summer tires typically have a reduced tread life. Rotation of these tires per the vehicle scheduled maintenance is highly recommended.

WARNING!

Tires and the spare tire should be replaced after six years, regardless of the remaining tread. Failure to follow this warning can result in sudden tire failure. You could lose control and have a collision resulting in serious injury or death.

NOTE: Wheel Valve Stem must be replaced as well when installing new tires due to wear and tear in existing tires.

Keep dismounted tires in a cool, dry place with as little exposure to light as possible. Protect tires from contact with oil, grease, and gasoline.

Replacement Tires

The tires on your new vehicle provide a balance of many characteristics. They should be inspected regularly for wear and correct cold tire inflation pressures. The manufacturer strongly recommends that you use tires equivalent to the originals in size, quality and performance when replacement is needed. Refer to the paragraph on "Tread Wear Indicators" in this section. Refer to the Tire and Loading Information placard or the Vehicle Certification Label for the size designation of your tire. The Load Index and Speed Symbol for your tire will be found on the original equipment tire sidewall.

See the Tire Sizing Chart example found in the "Tire Safety Information" section of this manual for more information relating to the Load Index and Speed Symbol of a tire.

It is recommended to replace the two front tires or two rear tires as a pair. Replacing just one tire can seriously affect your vehicle's handling. If you ever replace a wheel, make sure that the wheel's specifications match those of the original wheels.

It is recommended you contact an authorized tire dealer or original equipment dealer with any questions you may have on tire specifications or capability. Failure to use equivalent replacement tires may adversely affect the safety, handling, and ride of your vehicle.

WARNING!

- **Do not use a tire, wheel size, load rating, or speed rating other than that specified for your vehicle. Some combinations of unapproved tires and wheels**

(Continued)

WARNING! *(Continued)*

may change suspension dimensions and performance characteristics, resulting in changes to steering, handling, and braking of your vehicle. This can cause unpredictable handling and stress to steering and suspension components. You could lose control and have a collision resulting in serious injury or death. Use only the tire and wheel sizes with load ratings approved for your vehicle.

- **Never use a tire with a smaller load index or capacity, other than what was originally equipped on your vehicle. Using a tire with a smaller load index could result in tire overloading and failure. You could lose control and have a collision.**
- **Failure to equip your vehicle with tires having adequate speed capability can result in sudden tire failure and loss of vehicle control.**

CAUTION!

Replacing original tires with tires of a different size may result in false speedometer and odometer readings.

Tire Types

All Season Tires — If Equipped

All Season tires provide traction for all seasons (Spring, Summer, Fall, and Winter). Traction levels may vary between different all season tires. All season tires can be identified by the M+S, M&S, M/S or MS designation on the tire sidewall. Use all season tires only in sets of four; failure to do so may adversely affect the safety and handling of your vehicle.

Summer Or Three Season Tires — If Equipped

Summer tires provide traction in both wet and dry conditions, and are not intended to be driven in snow or on ice. If your vehicle is equipped with Summer tires, be aware these tires are not designed for Winter or cold driving conditions. Install Winter tires on your vehicle when ambient temperatures are less than 40°F (5°C) or if roads are covered with ice or snow. For more information, contact an authorized dealer.

Summer tires do not contain the all season designation or mountain/snowflake symbol on the tire sidewall. Use Summer tires only in sets of four; failure to do so may adversely affect the safety and handling of your vehicle.

WARNING!

Do not use Summer tires in snow/ice conditions. You could lose vehicle control, resulting in severe injury or death. Driving too fast for conditions also creates the possibility of loss of vehicle control.

Snow Tires

Some areas of the country require the use of snow tires during the Winter. Snow tires can be identified by a "mountain/snowflake" symbol on the tire sidewall.

If you need snow tires, select tires equivalent in size and type to the original equipment tires. Use snow tires only in sets of four; failure to do so may adversely affect the safety and handling of your vehicle.

Snow tires generally have lower speed ratings than what was originally equipped with your vehicle and should not be operated at sustained speeds over 75 mph (120 km/h). For speeds above 75 mph (120 km/h) refer to original equipment or an authorized tire dealer for recommended safe operating speeds, loading and cold tire inflation pressures.

While studded tires improve performance on ice, skid and traction capability on wet or dry surfaces may be poorer than that of non-studded tires. Some states prohibit studded tires; therefore, local laws should be checked before using these tire types.

Spare Tires — If Equipped

NOTE: For vehicles equipped with Tire Service Kit instead of a spare tire, please refer to "Tire Service Kit" in "In Case Of Emergency" for further information.

CAUTION!

Because of the reduced ground clearance, do not take your vehicle through an automatic car wash with a compact or limited use temporary spare installed. Damage to the vehicle may result.

Refer to the "Towing Requirements - Tires" in "Starting And Operating" for restrictions when towing with a spare tire designated for temporary emergency use.

Spare Tire Matching Original Equipped Tire And Wheel — If Equipped

Your vehicle may be equipped with a spare tire and wheel equivalent in look and function to the original equipment

tire and wheel found on the front or rear axle of your vehicle. This spare tire may be used in the tire rotation for your vehicle. If your vehicle has this option, refer to an authorized tire dealer for the recommended tire rotation pattern.

Compact Spare Tire — If Equipped

The compact spare is for temporary emergency use only. You can identify if your vehicle is equipped with a compact spare by looking at the spare tire description on the Tire and Loading Information Placard located on the driver's side door opening or on the sidewall of the tire. Compact spare tire descriptions begin with the letter "T" or "S" preceding the size designation. Example: T145/80D18 103M.

T, S = Temporary Spare Tire

Since this tire has limited tread life, the original equipment tire should be repaired (or replaced) and reinstalled on your vehicle at the first opportunity.

Do not install a wheel cover or attempt to mount a conventional tire on the compact spare wheel, since the wheel is designed specifically for the compact spare tire. Do not install more than one compact spare tire and wheel on the vehicle at any given time.

WARNING!

Compact and collapsible spares are for temporary emergency use only. With these spares, do not drive more than 50 mph (80 km/h). Temporary use spares have limited tread life. When the tread is worn to the tread wear indicators, the temporary use spare tire needs to be replaced. Be sure to follow the warnings, which apply to your spare. Failure to do so could result in spare tire failure and loss of vehicle control.

Collapsible Spare Tire — If Equipped

The collapsible spare is for temporary emergency use only. You can identify if your vehicle is equipped with a collapsible spare by looking at the spare tire description on the Tire and Loading Information Placard located on the driver's side door opening or on the sidewall of the tire.

Collapsible spare tire description example: 165/80-17 101P.

Since this tire has limited tread life, the original equipment tire should be repaired (or replaced) and reinstalled on your vehicle at the first opportunity.

Inflate collapsible tire only after the wheel is properly installed to the vehicle. Inflate the collapsible tire using the electric air pump before lowering the vehicle.

Do not install a wheel cover or attempt to mount a conventional tire on the collapsible spare wheel, since the wheel is designed specifically for the collapsible spare tire.

WARNING!

Compact and Collapsible spares are for temporary emergency use only. With these spares, do not drive more than 50 mph (80 km/h). Temporary use spares have limited tread life. When the tread is worn to the tread wear indicators, the temporary use spare tire needs to be replaced. Be sure to follow the warnings, which apply to your spare. Failure to do so could result in spare tire failure and loss of vehicle control.

Full Size Spare — If Equipped

The full size spare is for temporary emergency use only. This tire may look like the originally equipped tire on the front or rear axle of your vehicle, but it is not. This spare tire may have limited tread life. When the tread is worn to the tread wear indicators, the temporary use full size spare tire needs to be replaced. Since it is not the same as your original equipment tire, replace (or repair) the original equipment tire and reinstall on the vehicle at the first opportunity.

Limited Use Spare — If Equipped

The limited use spare tire is for temporary emergency use only. This tire is identified by a label located on the limited use spare wheel. This label contains the driving limitations for this spare. This tire may look like the original equipped tire on the front or rear axle of your vehicle, but it is not. Installation of this limited use spare tire affects vehicle handling. Since it is not the same as your original equipment tire, replace (or repair) the original equipment tire and reinstall on the vehicle at the first opportunity.

WARNING!

Limited use spares are for emergency use only. Installation of this limited use spare tire affects vehicle handling. With this tire, do not drive more than the speed listed on the limited use spare wheel. Keep inflated to the cold tire inflation pressures listed on your Tire and Loading Information Placard located on the driver's side B-Pillar or the rear edge of the driver's

(Continued)

WARNING! *(Continued)*

side door. Replace (or repair) the original equipment tire at the first opportunity and reinstall it on your vehicle. Failure to do so could result in loss of vehicle control.

Wheel And Wheel Trim Care

All wheels and wheel trim, especially aluminum and chrome plated wheels, should be cleaned regularly using mild (neutral Ph) soap and water to maintain their luster and to prevent corrosion. Wash wheels with the same soap solution recommended for the body of the vehicle and remember to always wash when the surfaces are not hot to the touch.

Your wheels are susceptible to deterioration caused by salt, sodium chloride, magnesium chloride, calcium chloride, etc., and other road chemicals used to melt ice or control dust on dirt roads. Use a soft cloth or sponge and mild soap to wipe away promptly. Do not use harsh chemicals or a stiff brush. They can damage the wheel's protective coating that helps keep them from corroding and tarnishing.

CAUTION!

Avoid products or automatic car washes that use acidic solutions or strong alkaline additives or harsh brushes. Many aftermarket wheel cleaners and automatic car washes may damage the wheel's protective finish. Such damage is not covered by the New Vehicle Limited Warranty. Only car wash soap, Mopar Wheel Cleaner or equivalent is recommended.

When cleaning extremely dirty wheels including excessive brake dust, care must be taken in the selection of tire and wheel cleaning chemicals and equipment to prevent damage to the wheels. Mopar Wheel Treatment or Mopar Chrome Cleaner or their equivalent is recommended or select a non-abrasive, non-acidic cleaner for aluminum or chrome wheels.

CAUTION!

Do not use scouring pads, steel wool, a bristle brush, metal polishes or oven cleaner. These products may damage the wheel's protective finish. Such damage is not covered by the New Vehicle Limited Warranty. Only car wash soap, Mopar Wheel Cleaner or equivalent is recommended.

NOTE: If you intend parking or storing your vehicle for an extended period after cleaning the wheels with wheel cleaner, drive your vehicle and apply the brakes to remove the water droplets from the brake components. This activity will remove the red rust on the brake rotors and prevent vehicle vibration when braking.

Dark Vapor Chrome, Black Satin Chrome, or Low Gloss Clear Coat Wheels

CAUTION!

If your vehicle is equipped with these specialty wheels, DO NOT USE wheel cleaners, abrasives, or polishing compounds. They will permanently damage this finish and such damage is not covered by the New Vehicle Limited Warranty. HAND WASH ONLY USING MILD SOAP AND WATER WITH A SOFT CLOTH. Used on a regular basis; this is all that is required to maintain this finish.

Tire Chains (Traction Devices)

Use of traction devices require sufficient tire-to-body clearance. Follow these recommendations to guard against damage:

- Traction device must be of proper size for the tire, as recommended by the traction device manufacturer.
- Install on Front Tires.
- Due to limited clearance, a 185/55R15 tire on a 15 x 6.0 x 35mm wheel with a Peerless Super Z6 low profile traction device or equivalent is recommended.

WARNING!

Using tires of different size and type (M+S, Snow) between front and rear axles can cause unpredictable handling. You could lose control and have a collision.

CAUTION!

To avoid damage to your vehicle or tires, observe the following precautions:

- **Because of restricted traction device clearance between tires and other suspension components, it is important that only traction devices in good condition are used. Broken devices can cause serious damage. Stop the vehicle immediately if noise occurs that could indicate device breakage. Remove the damaged parts of the device before further use.**
- **Install device as tightly as possible and then retighten after driving about ½ mile (0.8 km).**
- **Do not exceed 30 mph (48 km/h).**
- **Drive cautiously and avoid severe turns and large bumps, especially with a loaded vehicle.**
- **Do not drive for a prolonged period on dry pavement.**
- **Observe the traction device manufacturer's instructions on the method of installation, operating speed, and conditions for use. Always use the suggested operating speed of the device manufacturer's if it is less than 30 mph (48 km/h).**
- **Do not use traction devices on a compact spare tire.**

Tire Rotation Recommendations

The tires on the front and rear of your vehicle operate at different loads and perform different steering, driving, and braking functions. For these reasons, they wear at unequal rates.

These effects can be reduced by timely rotation of tires. The benefits of rotation are especially worthwhile with aggressive tread designs such as those on all season type tires. Rotation will increase tread life, help to maintain mud, snow and wet traction levels, and contribute to a smooth, quiet ride.

Refer to the "Maintenance Schedule" for the proper maintenance intervals. The reasons for any rapid or unusual wear should be corrected prior to rotation being performed.

The front and rear wheels are different sizes and cannot be used in place of each other. Rotate the wheels "side-to-side" as shown in the diagram.

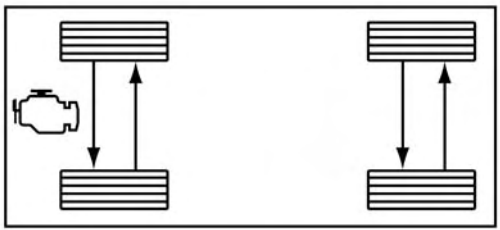

81f10b20

Tire Rotation

DEPARTMENT OF TRANSPORTATION UNIFORM TIRE QUALITY GRADES

The following tire grading categories were established by the National Highway Traffic Safety Administration. The specific grade rating assigned by the tire's manufacturer in each category is shown on the sidewall of the tires on your vehicle.

All passenger vehicle tires must conform to Federal safety requirements in addition to these grades.

Treadwear

The Treadwear grade is a comparative rating, based on the wear rate of the tire when tested under controlled conditions on a specified government test course. For example, a tire graded 150 would wear one and one-half times as well on the government course as a tire graded 100. The relative performance of tires depends upon the actual conditions of their use, however, and may depart significantly from the norm due to variations in driving habits, service practices, and differences in road characteristics and climate.

Traction Grades

The Traction grades, from highest to lowest, are AA, A, B, and C. These grades represent the tire's ability to stop on wet pavement, as measured under controlled conditions on specified government test surfaces of asphalt and concrete. A tire marked C may have poor traction performance.

WARNING!

The traction grade assigned to this tire is based on straight-ahead braking traction tests, and does not include acceleration, cornering, hydroplaning, or peak traction characteristics.

Temperature Grades

The Temperature grades are A (the highest), B, and C, representing the tire's resistance to the generation of heat and its ability to dissipate heat, when tested under controlled conditions on a specified indoor laboratory test wheel.

Sustained high temperature can cause the material of the tire to degenerate and reduce tire life, and excessive temperature can lead to sudden tire failure. The grade C corresponds to a level of performance, which all passenger vehicle tires must meet under the Federal Motor Vehicle Safety Standard No. 109. Grades B and A represent higher levels of performance on the laboratory test wheel, than the minimum required by law.

WARNING!

The temperature grade for this tire is established for a tire that is properly inflated and not overloaded. Excessive speed, under-inflation, or excessive loading, either separately or in combination, can cause heat buildup and possible tire failure.

STORING THE VEHICLE

The preferred way of storing your vehicle for a long period of time is to leave it attached to a Level 1 or Level 2 charger. The vehicle has a wake-up feature that will wake the system every 3 weeks and do a maintenance charge on the 12 Volt battery and also top off the high voltage battery if necessary.

Anytime you store your vehicle, or keep it out of service (e.g., vacation) for two weeks or more, run the air conditioning system at idle for about five minutes in the fresh air and high blower setting. This will ensure adequate system lubrication to minimize the possibility of compressor damage when the air conditioning system is started again.

BODYWORK

Protection From Atmospheric Agents

Vehicle body care requirements vary according to geographic locations and usage. Chemicals that make roads passable in snow and ice and those that are sprayed on trees and road surfaces during other seasons are highly corrosive to the metal in your vehicle. Outside parking, which exposes your vehicle to airborne contaminants, road surfaces on which the vehicle is operated, extreme hot or cold weather and other extreme conditions will have an adverse effect on paint, metal trim, and underbody protection.

The following maintenance recommendations will enable you to obtain maximum benefit from the corrosion resistance built into your vehicle.

What Causes Corrosion?

Corrosion is the result of deterioration or removal of paint and protective coatings from your vehicle.

The most common causes are:

- Road salt, dirt and moisture accumulation.
- Stone and gravel impact.
- Insects, tree sap and tar.
- Salt in the air near seacoast localities.
- Atmospheric fallout/industrial pollutants.

Body And Underbody Maintenance

Cleaning Headlights

Your vehicle is equipped with plastic headlights and fog lights that are lighter and less susceptible to stone breakage than glass headlights.

Plastic is not as scratch resistant as glass and therefore different lens cleaning procedures must be followed.

To minimize the possibility of scratching the lenses and reducing light output, avoid wiping with a dry cloth. To remove road dirt, wash with a mild soap solution followed by rinsing.

Do not use abrasive cleaning components, solvents, steel wool or other aggressive material to clean the lenses.

Preserving The Bodywork

Washing

- Wash your vehicle regularly. Always wash your vehicle in the shade using Mopar Car Wash, or a mild car wash soap, and rinse the panels completely with clear water.

- If insects, tar, or other similar deposits have accumulated on your vehicle, use Mopar Super Kleen Bug and Tar Remover to remove.
- Use a high quality cleaner wax, such as Mopar Cleaner Wax to remove road film, stains and to protect your paint finish. Take care never to scratch the paint.
- Avoid using abrasive compounds and power buffing that may diminish the gloss or thin out the paint finish.

CAUTION!

- **Do not use abrasive or strong cleaning materials such as steel wool or scouring powder that will scratch metal and painted surfaces.**
- **Use of power washers exceeding 1,200 psi (8,274 kPa) can result in damage or removal of paint and decals.**

Special Care

- If you drive on salted or dusty roads or if you drive near the ocean, hose off the undercarriage at least once a month.
- It is important that the drain holes in the lower edges of the doors, rocker panels, and trunk be kept clear and open.
- If you detect any stone chips or scratches in the paint, touch them up immediately. The cost of such repairs is considered the responsibility of the owner.
- If your vehicle is damaged due to a collision or similar cause that destroys the paint and protective coating, have your vehicle repaired as soon as possible. The cost of such repairs is considered the responsibility of the owner.
- If you carry special cargo such as chemicals, fertilizers, de-icer salt, etc., be sure that such materials are well packaged and sealed.
- If a lot of driving is done on gravel roads, consider mud or stone shields behind each wheel.
- Use Mopar Touch Up Paint on scratches as soon as possible. An authorized dealer has touch up paint to match the color of your vehicle.

INTERIORS

Seats And Fabric Parts

Use Mopar Total Clean to clean fabric upholstery and carpeting.

WARNING!

Do not use volatile solvents for cleaning purposes. Many are potentially flammable, and if used in closed areas they may cause respiratory harm.

Seat Belt Maintenance

Do not bleach, dye or clean the belts with chemical solvents or abrasive cleaners. This will weaken the fabric. Sun damage can also weaken the fabric.

If the belts need cleaning, use a mild soap solution or lukewarm water. Do not remove the belts from the vehicle to wash them. Dry with a soft cloth.

Replace the belts if they appear frayed or worn or if the buckles do not work properly.

WARNING!

A frayed or torn belt could rip apart in a collision and leave you with no protection. Inspect the belt system periodically, checking for cuts, frays, or loose parts. Damaged parts must be replaced immediately. Do not disassemble or modify the system. Seat belt assemblies must be replaced after a collision if they have been damaged (i.e., bent retractor, torn webbing, etc.).

Plastic And Coated Parts

Use Mopar Total Clean to clean vinyl upholstery.

CAUTION!

- **Direct contact of air fresheners, insect repellents, suntan lotions, or hand sanitizers to the plastic, painted, or decorated surfaces of the interior may cause permanent damage. Wipe away immediately.**
- **Damage caused by these type of products may not be covered by your New Vehicle Limited Warranty.**

Cleaning Plastic Instrument Cluster Lenses

The lenses in front of the instruments in this vehicle are molded in clear plastic. When cleaning the lenses, care must be taken to avoid scratching the plastic.

1. Clean with a wet soft cloth. A mild soap solution may be used, but do not use high alcohol content or abrasive cleaners. If soap is used, wipe clean with a clean damp cloth.
2. Dry with a soft cloth.

Leather Parts

Mopar Total Clean is specifically recommended for leather upholstery.

Your leather upholstery can be best preserved by regular cleaning with a damp soft cloth. Small particles of dirt can act as an abrasive and damage the leather upholstery and should be removed promptly with a damp cloth. Stubborn soils can be removed easily with a soft cloth and Mopar Total Clean. Care should be taken to avoid soaking your leather upholstery with any liquid. Please do not use polishes, oils, cleaning fluids, solvents, detergents, or ammonia-based cleaners to clean your leather upholstery. Application of a leather conditioner is not required to maintain the original condition.

NOTE: If equipped with light colored leather, it tends to show any foreign material, dirt, and fabric dye transfer more so than darker colors. The leather is designed for easy cleaning, and FCA recommends Mopar total care leather cleaner applied on a cloth to clean the leather seats as needed.

CAUTION!

Do not use Alcohol and Alcohol-based and/or Ketone based cleaning products to clean leather upholstery, as damage to the upholstery may result.

Glass Surfaces

All glass surfaces should be cleaned on a regular basis with Mopar Glass Cleaner, or any commercial household-type glass cleaner. Never use an abrasive type cleaner. Use caution when cleaning the inside rear window equipped with electric defrosters or windows equipped with radio antennas. Do not use scrapers or other sharp instruments that may scratch the elements.

When cleaning the rear view mirror, spray cleaner on the towel or cloth that you are using. Do not spray cleaner directly on the mirror.

TECHNICAL SPECIFICATIONS

CONTENTS

- VEHICLE IDENTIFICATION NUMBER 254
- BRAKE SYSTEM. 254
- WHEEL AND TIRE TORQUE SPECIFICATIONS . .255
  - Torque Specifications 255
- FLUID CAPACITIES 256
- FLUIDS AND LUBRICANTS 257

VEHICLE IDENTIFICATION NUMBER

The Vehicle Identification Number (VIN) is found on the left front corner of the instrument panel, visible through the windshield. This number also appears engraved on the right front door sill, under the sill scuff plate, on an adhesive label applied to the right door opening on the B-Pillar, on the vehicle registration and title.

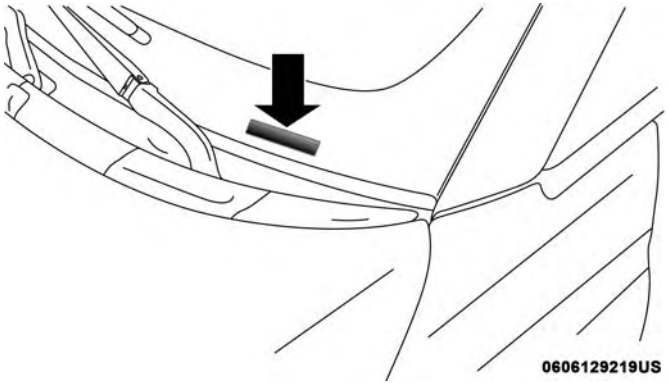

Vehicle Identification Number

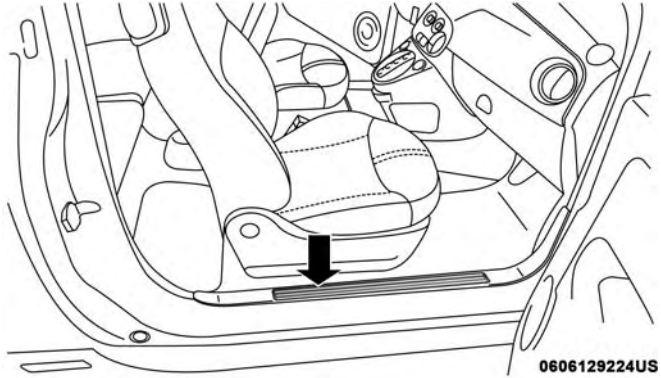

Stamped VIN Location

NOTE: It is illegal to remove or alter the VIN.

BRAKE SYSTEM

In the event regenerative braking or power assist is lost for any reason the brakes will still function. The effort required to brake the vehicle will be significantly more than that required with the power system operating.

If either the front or rear hydraulic system loses normal capability, the remaining system will still function with some loss of braking effectiveness. This will be evident by increased pedal travel during application, greater pedal

force required to slow or stop, and activation of the Brake Warning Light and the ABS Warning Light during brake use.

WHEEL AND TIRE TORQUE SPECIFICATIONS

Proper lug nut/bolt torque is very important to ensure that the wheel is properly mounted to the vehicle. Any time a wheel has been removed and reinstalled on the vehicle, the lug nuts/bolts should be torqued using a properly calibrated torque wrench using a high quality six sided (hex) deep wall socket.

Torque Specifications

Lug Nut/Bolt Torque	**Lug Nut/ Bolt Size	Lug Nut/ Bolt Socket Size
66 Ft-Lbs (90 N·m) **Steel Wheels Only** 74 Ft-Lbs (100 N·m) **Aluminum Wheels Only**	M12 x 1.25	17 mm

**Use only your authorized dealer recommended lug nuts/ bolts and clean or remove any dirt or oil before tightening.

Inspect the wheel mounting surface prior to mounting the tire and remove any corrosion or loose particles.

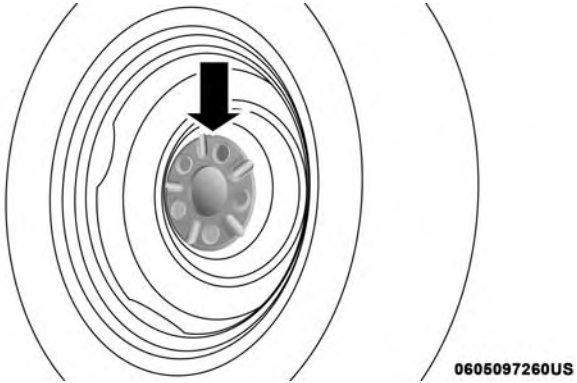

Wheel Mounting Surface

Tighten the lug nuts/bolts in a star pattern until each nut/bolt has been tightened twice.

0605006372

Torque Patterns

After 25 miles (40 km), check the lug nut/bolt torque to be sure that all the lug nuts/bolts are properly seated against the wheel.

WARNING!

To avoid the risk of forcing the vehicle off the jack, do not tighten the lug nuts/bolts fully until the vehicle has been lowered. Failure to follow this warning may result in personal injury.

FLUID CAPACITIES

Systems	U.S.	Metric
Power Electronics Cooling System	3.6 Quarts	3.4 Liters
Battery Thermal Management Cooling System	7.0 Quarts	6.6 Liters
Single-Speed Transmission	0.8 Quart	750 ml

FLUIDS AND LUBRICANTS

Component	Fluids And Lubricants
Coolant	Mopar Antifreeze/Coolant 10 Year/150,000 Mile (240,000 km) Formula OAT (Organic Additive Technology) or equivalent meeting the requirements of FCA Material Standard MS.90032.
Brake Master Cylinder	Mopar DOT 3, SAE J1703 should be used.
Refrigerant	Mopar R134a
Compressor Lubricant	Mopar POE Oil or Equivalent meeting the requirements of FCA Material Standard MS-12727
Single-Speed Transmission	Castrol BOT 533

CAUTION!

- **Mixing of coolant (antifreeze) other than specified Organic Additive Technology (OAT) coolant (antifreeze), may result in cooling system damage and may decrease corrosion protection. Organic Additive Technology (OAT) coolant is different and should not be mixed with Hybrid Organic Additive Technology (HOAT) coolant (antifreeze). If a non-OAT coolant (antifreeze) is introduced into the cooling system in an emergency, it should be replaced with the specified coolant (antifreeze) as soon as possible.**

(Continued)

CAUTION! ***(Continued)***

- **Do not use water alone or alcohol-based coolant (antifreeze) products. Do not use additional rust inhibitors or antirust products, as they may not be compatible with the radiator coolant and may plug the radiator.**
- **This vehicle has not been designed for use with propylene glycol-based coolant (antifreeze). Use of propylene glycol-based coolant (antifreeze) is not recommended.**

MULTIMEDIA

CONTENTS

- UCONNECT SYSTEMS 260
- CYBERSECURITY 260
- UCONNECT SETTINGS 261
  - Customer Programmable Features — Uconnect 3/3 NAV Display Settings. 262
- STEERING WHEEL AUDIO CONTROLS 272
  - Radio Operation. 272
  - Media Mode 272
- IPOD/USB/MEDIA PLAYER CONTROL — IF EQUIPPED 273
- RADIO OPERATION AND MOBILE PHONES . . .273
  - General Information 274
- TELEMATICS MODEM 274
- UCONNECT 3/3 NAV VOICE RECOGNITION QUICK TIPS 275
  - Introducing Uconnect 275
  - Get Started 275
  - Basic Voice Commands 276
  - Radio 277
  - Media 277
  - Phone 278
  - General Information 279
  - Additional Information 279
- CD/DVD DISC MAINTENANCE 279

UCONNECT SYSTEMS

For detailed information about your Uconnect system, refer to your Uconnect Owner's Manual Supplement.

NOTE: Uconnect screen images are for illustration purposes only and may not reflect exact software for your vehicle.

CYBERSECURITY

Your vehicle may be a connected vehicle and may be equipped with both wired and wireless networks. These networks allow your vehicle to send and receive information. This information allows systems and features in your vehicle to function properly.

Your vehicle may be equipped with certain security features to reduce the risk of unauthorized and unlawful access to vehicle systems and wireless communications. Vehicle software technology continues to evolve over time and FCA US LLC, working with its suppliers, evaluates and takes appropriate steps as needed. Similar to a computer or other devices, your vehicle may require software updates to improve the usability and performance of your systems or to reduce the potential risk of unauthorized and unlawful access to your vehicle systems.

The risk of unauthorized and unlawful access to your vehicle systems may still exist, even if the most recent version of vehicle software (such as Uconnect software) is installed.

WARNING!

- **It is not possible to know or to predict all of the possible outcomes if your vehicle's systems are breached. It may be possible that vehicle systems, including safety related systems, could be impaired or a loss of vehicle control could occur that may result in an accident involving serious injury or death.**
- **ONLY insert media (e.g., USB, SD card, or CD) into your vehicle if it came from a trusted source. Media of unknown origin could possibly contain malicious software, and if installed in your vehicle, it may increase the possibility for vehicle systems to be breached.**
- **As always, if you experience unusual vehicle behavior, take your vehicle to your nearest authorized dealer immediately.**

NOTE:

- FCA US LLC or your dealer may contact you directly regarding software updates.
- To help further improve vehicle security and minimize the potential risk of a security breach, vehicle owners should:
  - Routinely check www.driveuconnect.com/support/software-update.html (U.S. Residents) or www.driveuconnect.ca (Canadian Residents) to learn about available Uconnect software updates.
  - Only connect and use trusted media devices (e.g. personal mobile phones, USBs, CDs).

Privacy of any wireless and wired communications cannot be assured. Third parties may unlawfully intercept information and private communications without your consent. For further information, refer to "Onboard Diagnostic System (OBD II) Cybersecurity" in "Getting To Know Your Instrument Panel".

UCONNECT SETTINGS

The Uconnect system uses a combination of buttons on the touchscreen and buttons on the faceplate located on the center of the instrument panel that allows you to access and change the customer programmable features. Many features can vary by vehicle.

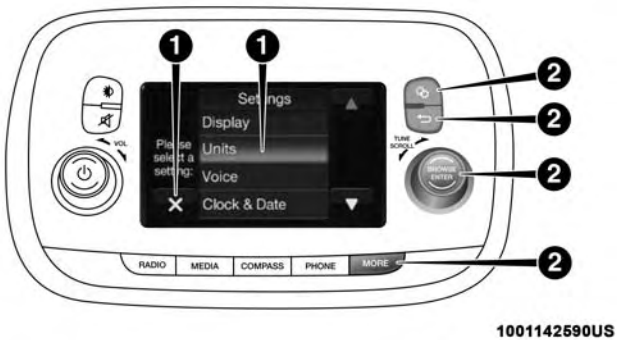

Uconnect 3/3 NAV Display Buttons On The Touchscreen And Buttons On The Faceplate

1 — Uconnect Buttons On The Touchscreen
2 — Uconnect Buttons On The Faceplate

Customer Programmable Features — Uconnect 3/3 NAV Display Settings

Push the Settings button on the faceplate, to display the settings menu screen. In this mode the Uconnect system allows you to access programmable feature settings.

NOTE: Only one touchscreen area may be selected at a time.

When making a selection, press the button on the touchscreen to enter the desired mode. Once in the desired mode, press and release the preferred setting and make your selection. Once the setting is complete, either press the back arrow button on the touchscreen or push the back button on the faceplate to return to the previous menu. Or press the "X" button on the touchscreen to close out of the settings screen. Pressing the up or down arrow buttons on the right side of the screen allows you to toggle up or down through the available settings.

NOTE: All settings should be changed with the ignition in the "AVV/MAR" position.

Display

After pressing the "Display" button on the touchscreen, the following settings will be available:

Setting Name	Selectable Options	
Display Mode	Auto	Manual
NOTE: When the "Display Mode" feature is set to "Auto" the radio touchscreen's brightness will be adjusted with all other instrument panel displays and lights when they are adjusted using the instrument cluster display buttons on the right-hand side of the instrument cluster display. When the "Display Mode" feature is set to "Manual" the radio screen brightness can be adjusted independently using the "Brightness" feature below.		

Setting Name	Selectable Options		
Brightness	+	–	
Language	English	Français	Español
Touchscreen Beep	On	Off	
Charge Low Pop-Up	On	Off	
NOTE: When in the “Charge Low Pop-Up” display, you may turn on or shut off a low charge indicator.			

Units

After pressing the “Units” button on the touchscreen, you may select each unit of measure independently displayed in the instrument cluster display. The following selectable units of measure are listed below:

Setting Name	Selectable Options
US	Changes the instrument cluster display to US units of measure.
Metric	Changes the instrument cluster display to Metric units of measure.

After pressing the “Custom” button on the touchscreen, you may select from the following menu items:

Setting Name	Selectable Options	
Distance	mi	km
Pressure	psi	kPa
Temperature	°C	°F
Energy	MPGe	km/kWH
	mi/kWh	KM/Le

Voice

After pressing the “Voice” button on the touchscreen, the following settings will be available:

Setting Name	Selectable Options		
Voice Response Length	Brief	Long	
Show Command List	Always	With Help	Never

Clock & Date

After pressing the "Clock & Date" button on the touch-screen, the following settings will be available:

Setting Name	Selectable Options	
Set Time and Format	12 hour	24 hour
NOTE: Press the corresponding arrow above and below the current time to adjust, then select "AM" or "PM."		
Show Time Status	On	Off
Set Date	Set Date	
NOTE: Press the corresponding arrows above and below the current date to adjust.		
Sync Time — If Equipped	On	Off
NOTE: When in the "Sync Time" display, you may sync the time with GPS.		

Charging Schedule

To set up a charging schedule, press the "More" or "Settings" button on the touchscreen.

Setting Name	Selectable Options	
Enable Schedule	On	Off
NOTE: Continue setting up the schedule, picking from the following menus: • Weekdays or Weekends • Start and End Times		

Safety/Assistance

After pressing the "Safety/Assistance" button on the touchscreen, the following settings will be available:

Setting Name	Selectable Options	
Hill Start Assist — If Equipped	On	Off
Rear View Camera Delay	On	Off
ParkView Backup Camera Active Guide Lines	On	Off
NOTE: When this feature is enabled, active (dynamic) grid lines are overlaid on the Rear Backup Camera image to illustrate the width of the vehicle and its projected back up path based on the steering wheel position. A dashed center line overlay indicates the center of the vehicle to assist with parking or aligning to a hitch/receiver.		

Setting Name	Selectable Options	
ParkView Backup Camera Fixed Guide Lines	On	Off
NOTE: When this feature is enabled, fixed (static) grid lines are overlaid on the Rear Backup Camera image to illustrate the width of the vehicle.		

Lights

After pressing the "Lights" button on the touchscreen, the following settings will be available:

Setting Name	Selectable Options	
Daytime Running Lights	On	Off

Doors & Locks

After pressing the "Doors & Locks" button on the touchscreen, the following settings will be available:

Setting Name	Selectable Options	
Auto Door Locks	On	Off
NOTE: When the "Auto Door Locks" feature is selected, all doors will lock automatically when the vehicle reaches a speed of 12 mph (20 km/h).		

Setting Name	Selectable Options	
Remote Door Unlock/Door Unlock	Driver	All
NOTE: When "Driver" is selected, only the driver's door will unlock on the first push of the key fob unlock button, you must push the key fob unlock button twice to unlock the passenger's doors. When "All" is selected, all of the doors will unlock on the first push of the key fob unlock button.		

Engine Off Options

After pressing the "Engine Off Options" button on the touchscreen, the following settings will be available:

Setting Name	Selectable Options	
Radio Off Delay	0 min.	20 min.

Audio

After pressing the "Audio" button on the touchscreen, the following settings will be available:

Setting Name	Selectable Options	
Equalizer	+	–
NOTE: • When in the "Equalizer" display, you may adjust the Bass, Mid and Treble settings. • Bass/Mid/Treble allow you to simply slide your finger up or down to change the setting as well as press directly on the desired setting.		

Setting Name	Selectable Options		
Balance/Fade	When in the "Balance/ Fade" display, you may adjust the Balance settings.		
Auto-On Radio	On	Off	Recall Last
NOTE: When the "Auto-On Radio" feature is selected, the radio automatically turns on when the vehicle is in RUN or recalls whether it was on or off at last ignition off.			
Radio Off With Door	On	Off	
NOTE: When the "Radio Off With Door" feature is selected, the radio remains on until the driver or passenger door is opened or when the Radio Off Delay time expires.			

Phone/Bluetooth

After pressing the "Phone/Bluetooth" button on the touch-screen, the following settings will be available:

Setting Name	Selectable Options
Paired Phones	List of Paired Phones
NOTE: The "Paired Phones" feature shows which phones are paired to the Phone/Bluetooth system. For further information, refer to the Uconnect Owner's Manual Supplement.	

SiriusXM Setup — If Equipped

After pressing the "SiriusXM Setup" button on the touch-screen, the following settings will be available:

Setting Name	Selectable Options	
Tune Start	On	Off
NOTE: "Tune Start" begins playing the current song from the beginning when you tune to a music channel using one of the twelve presets, so you can enjoy the complete song. This feature occurs the first time the preset is selected during that current song. Tune Start works in the background, so you will not even realize it's on, except that you will miss the experience of joining your favorite song with only a few seconds left to play.		
Channel Skip	Channel Skip	
NOTE: SiriusXM can be programmed to designate a group of channels that are the most desirable to listen to or to exclude undesirable channels while scanning.		
Subscription Information	Subscription Info	
NOTE: • New vehicle purchasers or lessees will receive a free limited time subscription to SiriusXM Satellite Radio with your radio. Following the expiration of the free services, it will be necessary to access the information on the Subscription Information screen to re-subscribe. • Write down the SIRIUS ID numbers for your receiver. To reactivate your service, either call the number listed on the screen or visit the provider online.		

Restore Settings

After pressing the "Restore Settings" button on the touch-screen, the following settings will be available:

Setting Name	Selectable Options	
Restore Settings	Yes	No
NOTE: When the "Restore Settings" feature is selected it will reset the Display, Clock, Audio, and Radio Settings to their default settings. To restore the settings to their default setting, press the Restore Settings button. A pop-up will appear asking "Are you sure you want to reset your settings to default?" Once the settings are restored, a pop up appears stating "settings reset to default".		

Clear Personal Data

After pressing the "Clear Personal Data Settings" button on the touchscreen, the following settings will be available:

Setting Name	Selectable Options	
Clear Personal Data	Yes	No
NOTE: When this feature is selected, it will remove personal data including Bluetooth devices and presets. To remove personal information, press the "Clear Personal Data" button and a pop-up will appear asking "Are you sure you want to clear all personal data?" Once the data has been cleared, a pop up appears stating "Personal data cleared".		

STEERING WHEEL AUDIO CONTROLS

The remote sound system controls are located on the rear surface of the steering wheel. Reach behind the wheel to access the switches.

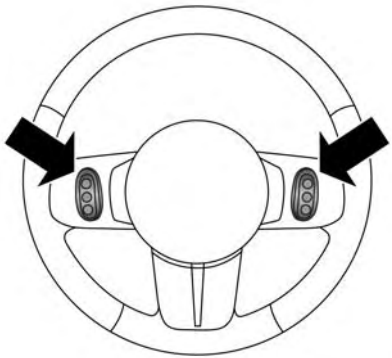

Sound System Controls (Back View Of Steering Wheel)

The right-hand control is a rocker-type switch with a pushbutton in the center and controls the volume and mode of the sound system. Pushing the top of the rocker switch increases the volume, and pushing the bottom of the rocker switch decreases the volume.

Pushing the center button makes the radio switch between the various modes available (AM/FM/SAT/AUX/Media Player, etc.) and can also be used to select/enter an item while scrolling through menu.

The left-hand control is a rocker-type switch with a push-button in the center. The function of the left-hand control is different depending on which mode you are in.

The following describes the left-hand control operation in each mode.

Radio Operation

Pushing the top of the switch will “Seek” up for the next listenable station and pushing the bottom of the switch will “Seek” down for the next listenable station.

The button located in the center of the left-hand control will tune to the next preset station that you have programmed in the radio preset button.

Media Mode

Pushing the top of the switch once goes to the next track on the selected media (AUX/USB/Bluetooth). Pushing the bottom of the switch once goes to the beginning of the

current track, or to the beginning of the previous track if it is within eight seconds after the current track begins to play.

IPOD/USB/MEDIA PLAYER CONTROL — IF EQUIPPED

This feature allows an iPod or external USB device to be plugged into the USB or AUX port, located on the center console.

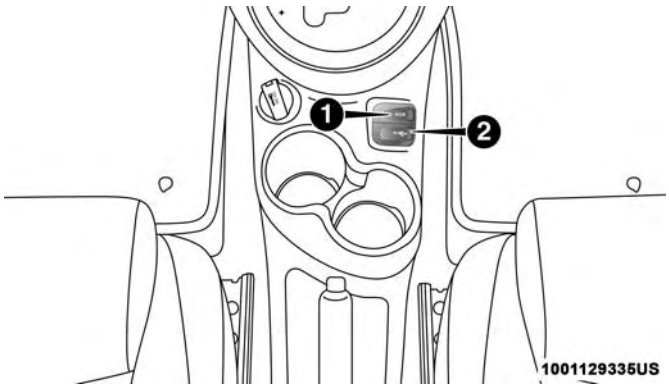

USB/AUX Port

1 — Auxiliary Cable Jack
2 — USB Connector

Your vehicle is also equipped with a charge-only USB power outlet that can be used to power cellular phones, small electronics, and other low powered electrical accessories. This USB charging outlet is located inside the glove compartment.

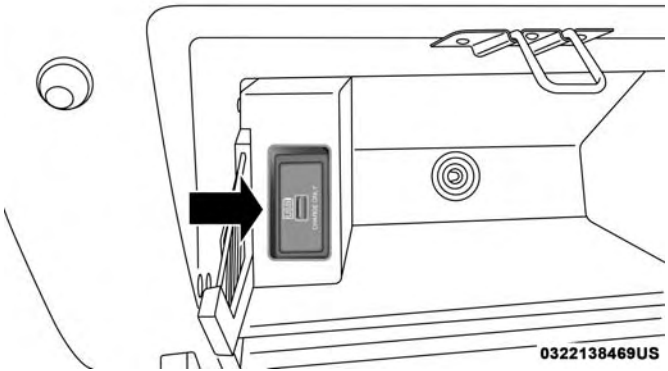

Glove Compartment Charge-Only USB Port

RADIO OPERATION AND MOBILE PHONES

Under certain conditions, the mobile phone being on in your vehicle can cause erratic or noisy performance from your radio. This condition may be lessened or eliminated by relocating the mobile phone antenna. This condition is not harmful to the radio. If your radio performance does

not satisfactorily "clear" by the repositioning of the antenna, it is recommended that the radio volume be turned down or off during mobile phone operation.

General Information

The following regulatory statement applies to all Radio Frequency (RF) devices equipped in this vehicle:

This device complies with Part 15 of the FCC Rules and with Industry Canada license-exempt RSS standard(s). Operation is subject to the following two conditions:

- This device may not cause harmful interference, and
- This device must accept any interference received, including interference that may cause undesired operation.

NOTE: Changes or modifications not expressly approved by the party responsible for compliance could void the user's authority to operate the equipment.

TELEMATICS MODEM

Your vehicle is equipped with a 3G CDMA cellular modem to connect the vehicle with your device to provide the following features:

- Range and State of Charge Information
- Configure Scheduled Charging Profile
- Average and total energy used
- Charge station location and availability on in vehicle NAV map
- Send navigation destination to vehicle from within Mobile App
- Remote Door Lock/Unlock
- Remote Horn and Lights Activation
- Pre-conditioning of interior temperature
- Email and SMS notifications

NOTE: This device complies with Part 15 of the FCC. Operation is subject to the following conditions:

- This device may not cause harmful interference.
- This device must accept any interference received, including interference that may cause undesired operation.

Changes or modifications not expressly approved by the party responsible for compliance could void the user's authority to operate the equipment.

UCONNECT 3/3 NAV VOICE RECOGNITION QUICK TIPS

Introducing Uconnect

Start using Uconnect Voice Recognition with these helpful quick tips. It provides the key Voice Commands and tips you need to know to control your Uconnect system.

Uconnect 3/3 NAV

Get Started

1. Visit UconnectPhone.com to check mobile device and feature compatibility and to find phone pairing instructions.
2. Reduce background noise. Wind and passenger conversations are examples of noise that may impact recognition.
3. Speak clearly at a normal pace and volume while facing straight ahead. The microphone is positioned on the rearview mirror and aimed at the driver.
4. Each time you give a Voice Command, you must first push either the VR or PHONE button, wait until **after** the beep, then say your Voice Command.
5. You can interrupt the help message or system prompts by pushing the VR or PHONE button and saying a Voice Command from current category.

All you need to control your Uconnect system with your voice are the buttons on your steering wheel.

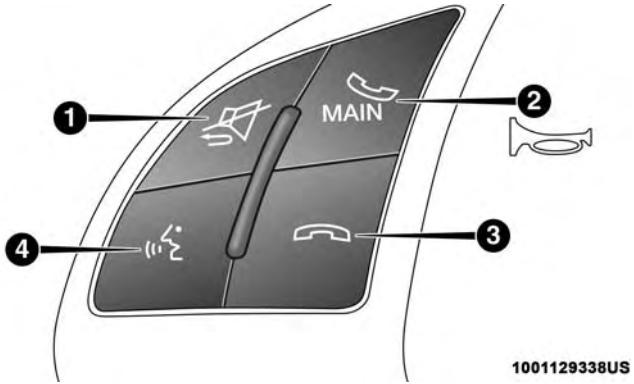

VR And Phone Buttons

1 — Push To MUTE
2 — Push To Initiate Or To Answer A Phone Call, Send Or Receive A Text
3 — Push To End Call
4 — Push To Begin Radio Or Media Functions

Basic Voice Commands

The basic Voice Commands below can be given at any point while using your Uconnect system.

Push the VR button . After the beep, say:

- " **Cancel**" to stop a current voice session
- " **Help**" to hear a list of suggested Voice Commands
- " **Repeat**" to listen to the system prompts again

Notice the visual cues that inform you of your voice recognition system's status. Cues appear on the touch-screen.

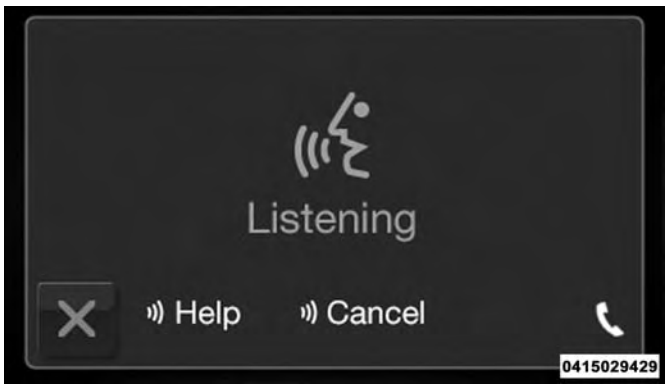

Uconnect 3/3 NAV VR

Radio

Use your voice to quickly get to the AM, FM or SiriusXM Satellite Radio stations you would like to hear. (Subscription or included SiriusXM Satellite Radio trial required.)

Push the VR button . After the beep, say:

- " **Tune to** ninety-five-point-five FM"
- " **Tune to** Satellite Channel Hits 1"

TIP: At any time, if you are not sure of what to say or want to learn a Voice Command, push the VR button and say " **Help**." The system provides you with a list of commands.

Uconnect 3/3 NAV Radio

Media

Uconnect offers connections via USB, Bluetooth and Auxiliary ports (if equipped). Voice operation is only available for connected USB and iPod devices.

Push the VR button . After the beep, say one of the following commands and follow the prompts to switch your media source or choose an artist.

- " **Change source** to Bluetooth"
- " **Change source** to iPod"
- " **Change source** to USB"

- " **Play artist** Beethoven"; " **Play album** Greatest Hits"; " **Play song** Moonlight Sonata"; " **Play genre** Classical"

TIP: Press the "Browse" button on the touchscreen to see all of the music on your iPod or USB device. Your Voice Command must match **exactly** how the artist, album, song and genre information is displayed.

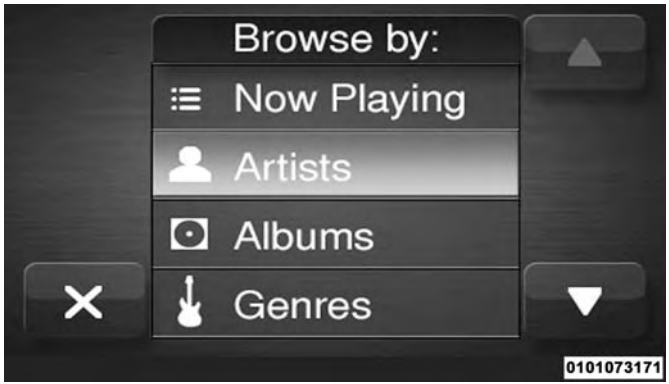

Uconnect 3/3 NAV Media

Phone

Making and answering hands-free phone calls is easy with Uconnect. When the Phonebook button is illuminated for the Uconnect 3/3 NAV radio, your system is ready. Check UconnectPhone.com for mobile phone compatibility and pairing instructions.

Push the Phone (if active) or VR button . After the beep, say one of the following commands:

- " **Call** John Smith"
- " **Dial** 123-456-7890 and follow the system prompts"
- " **Redial** (call previous outgoing phone number)"
- " **Call back** (call previous incoming phone number)"

TIP: When providing a Voice Command, push the Phone (if active) or VR button and say " **Call**," then pronounce the name **exactly** as it appears in your phone book. When a contact has multiple phone numbers, you can say " **Call** John Smith **work**."

Uconnect 3/3 NAV Phone

General Information

The following regulatory statement applies to all Radio Frequency (RF) devices equipped in this vehicle:

This device complies with Part 15 of the FCC Rules and with Industry Canada license-exempt RSS standard(s). Operation is subject to the following two conditions:

1. This device may not cause harmful interference, and
2. This device must accept any interference received, including interference that may cause undesired operation.

NOTE: Changes or modifications not expressly approved by the party responsible for compliance could void the user's authority to operate the equipment.

Additional Information

© 2018 FCA US LLC. All rights reserved. Mopar and Uconnect are registered trademarks and Mopar Owner Connect is a trademark of FCA US LLC. Android is a trademark of Google Inc. SiriusXM and all related marks and logos are trademarks of SiriusXM Radio Inc.

For Uconnect system support, call 1-877-855-8400 (24 hours a day 7 days a week) or visit DriveUconnect.com (U.S. Residents) or DriveUconnect.ca (Canadian Residents).

CD/DVD DISC MAINTENANCE

To keep a CD/DVD in good condition, take the following precautions:

- Handle the disc by its edge; avoid touching the surface.
- If the disc is stained, clean the surface with a soft cloth, wiping from center to edge.
- Do not apply paper or tape to the disc; avoid scratching the disc.

- Do not use solvents such as benzene, thinner, cleaners, or anti-static sprays.
- Store the disc in its case after playing.
- Do not expose the disc to direct sunlight.
- Do not store the disc where temperatures may become too high.

NOTE: If you experience difficulty in playing a particular disc, it may be damaged (e.g., scratched, reflective coating removed, a hair, moisture or dew on the disc), oversized, or have protection encoding. Try a known good disc before considering disc player service.

CUSTOMER ASSISTANCE

CONTENTS

- SUGGESTIONS FOR OBTAINING SERVICE FOR YOUR VEHICLE 282
  - Prepare For The Appointment 282
  - Prepare A List 282
  - Be Reasonable With Requests 282
- IF YOU NEED ASSISTANCE 282
  - FCA US LLC Customer Center 283
  - FCA Canada Inc. Customer Center. 283
  - In Mexico Contact 283
  - Puerto Rico And U.S. Virgin Islands. 283
  - Customer Assistance For The Hearing Or Speech Impaired (TDD/TTY) 284
  - Service Contract 284
- WARRANTY INFORMATION 285
- MOPAR PARTS 285
- REPORTING SAFETY DEFECTS 285
  - In The 50 United States And Washington, D.C. . .285
  - In Canada 286
- PUBLICATION ORDER FORMS 286

SUGGESTIONS FOR OBTAINING SERVICE FOR YOUR VEHICLE

Prepare For The Appointment

If you are having warranty work done, be sure to have the right papers with you. Take your warranty folder. All work to be performed may not be covered by the warranty. Discuss additional charges with the service manager. Keep a maintenance log of your vehicle's service history. This can often provide a clue to the current problem.

Prepare A List

Make a written list of your vehicle's problems or the specific work you want done. If you've had an accident or work done that is not on your maintenance log, let the service advisor know.

Be Reasonable With Requests

If you list a number of items and you must have your vehicle by the end of the day, discuss the situation with the service advisor and list the items in order of priority. At many authorized dealers, you may obtain a rental vehicle at a minimal daily charge. If you need a rental, it is advisable to make these arrangements when you call for an appointment.

IF YOU NEED ASSISTANCE

The manufacturer and its authorized dealer are vitally interested in your satisfaction. We want you to be happy with our products and services.

Warranty service must be done by an authorized dealer. We strongly recommend that you take the vehicle to an authorized dealer. They know your vehicle the best, and are most concerned that you get prompt and high quality service. The manufacturer's authorized dealer have the facilities, factory-trained technicians, special tools, and the latest information to ensure the vehicle is fixed correctly and in a timely manner.

This is why you should always talk to an authorized dealer service manager first. Most matters can be resolved with this process.

- If for some reason you are still not satisfied, talk to the general manager or owner of the authorized dealer. They want to know if you need assistance.
- If an authorized dealer is unable to resolve the concern, you may contact the manufacturer's customer center.

Any communication to the manufacturer's customer center should include the following information:

- Owner's name and address
- Owner's telephone number (home and office)
- Authorized dealer name
- Vehicle Identification Number (VIN)
- Vehicle delivery date and mileage

FCA US LLC Customer Center

P.O. Box 21–8004

Auburn Hills, MI 48321–8004

Phone: (888) 242-6342

FCA Canada Inc. Customer Center

P.O. Box 1621

Windsor, Ontario N9A 4H6

Phone: (800) 465-2001 English / (800) 387-9983 French

In Mexico Contact

Av. Prolongacion Paseo de la Reforma, 1240

Sante Fe C.P. 05109

Mexico, D. F.

In Mexico City: 800-505-1300

Outside Mexico City: +(52)55 50817568

Puerto Rico And U.S. Virgin Islands

FCA Caribbean LLC

P.O. Box 191857

San Juan 00919-1857

Phone: (888) 242-6342

Fax: (787) 782-3345

Customer Assistance For The Hearing Or Speech Impaired (TDD/TTY)

To assist customers who have hearing difficulties, the manufacturer has installed special TDD (Telecommunication Devices for the Deaf) equipment at its customer center. Any hearing or speech impaired customer, who has access to a TDD or a conventional teletypewriter (TTY) in the United States, can communicate with the manufacturer by dialing 1-800-380-CHRY.

Canadian residents with hearing difficulties that require assistance can use the special needs relay service offered by Bell Canada. For TTY teletypewriter users, dial 711 and for Voice callers, dial 1-800-855-0511 to connect with a Bell Relay Service operator.

Service Contract

You may have purchased a service contract for a vehicle to help protect you from the high cost of unexpected repairs after the manufacturer's New Vehicle Limited Warranty expires. The manufacturer stands behind only the manufacturer's service contracts. If you purchased a manufacturer's service contract, you will receive Plan Provisions and an Owner Identification Card in the mail within three weeks of the vehicle delivery date. If you have any questions about the service contract, call the manufacturer's Service Contract National Customer Hotline at 1-800-521-9922 (Canadian residents, call (800) 465-2001 English / (800) 387-9983 French).

The manufacturer will not stand behind any service contract that is not the manufacturer's service contract. It is not responsible for any service contract other than the manufacturer's service contract. If you purchased a service contract that is not a manufacturer's service contract, and you require service after the manufacturer's New Vehicle Limited Warranty expires, please refer to the contract documents, and contact the person listed in those documents.

We appreciate that you have made a major investment when you purchased the vehicle. An authorized dealer has also made a major investment in facilities, tools, and training to assure that you are absolutely delighted with the ownership experience. You will be pleased with their sincere efforts to resolve any warranty issues or related concerns.

WARNING!

Engine exhaust (internal combustion engines only), some of its constituents, and certain vehicle components contain, or emit, chemicals known to the State of California to cause cancer and birth defects, or other reproductive harm. In addition, certain fluids contained in vehicles and certain products of component wear contain, or emit, chemicals known to the State of California to cause cancer and birth defects, or other reproductive harm.

WARRANTY INFORMATION

See the Warranty Information Booklet for the terms and provisions of FCA US LLC warranties applicable to this vehicle and market.

MOPAR PARTS

Mopar fluids, lubricants, parts, and accessories are available from an authorized dealer. They are recommended for your vehicle in order to help keep the vehicle operating at its best.

REPORTING SAFETY DEFECTS

In The 50 United States And Washington, D.C.

If you believe that your vehicle has a defect that could cause a crash or cause injury or death, you should immediately inform the National Highway Traffic Safety Administration (NHTSA) in addition to notifying FCA US LLC.

If NHTSA receives similar complaints, it may open an investigation, and if it finds that a safety defect exists in a group of vehicles, it may order a recall and remedy campaign. However, NHTSA cannot become involved in individual problems between you, an authorized dealer or FCA US LLC.

To contact NHTSA, you may call the Vehicle Safety Hotline toll free at 1-888-327-4236 (TTY: 1-800-424-9153); or go to http://www.safercar.gov; or write to: Administrator, NHTSA, 1200 New Jersey Avenue, SE., West Building, Washington, D.C. 20590. You can also obtain other information about motor vehicle safety from http://www.safercar.gov.

In Canada

If you believe that your vehicle has a safety defect, you should contact the Customer Service Department immediately. Canadian customers who wish to report a safety defect to the Canadian government should contact Transport Canada, Motor Vehicle Defect Investigations and Recalls at 1-800-333-0510 or go to http://www.tc.gc.ca/roadsafety/.

PUBLICATION ORDER FORMS

To order the following manuals, you may use either the website or the phone numbers listed below.

Service Manuals

These comprehensive Service Manuals provide the information that students and professional technicians need in diagnosing/troubleshooting, problem solving, maintaining, servicing, and repairing FCA US LLC vehicles. A complete working knowledge of the vehicle, system, and/or components is written in straightforward language with illustrations, diagrams, and charts.

Diagnostic Procedure Manuals

Diagnostic Procedure Manuals are filled with diagrams, charts and detailed illustrations. These practical manuals make it easy for students and technicians to find and fix problems on computer-controlled vehicle systems and features. They show exactly how to find and correct problems the first time, using step-by-step troubleshooting and drivability procedures, proven diagnostic tests and a complete list of all tools and equipment.

Owner's Manuals

These Owner's Manuals have been prepared with the assistance of service and engineering specialists to acquaint you with specific FCA US LLC vehicles. Included are starting, operating, emergency and maintenance procedures as well as specifications, capabilities and safety tips.

Call toll free at:

- **1-800-890-4038 (U.S.)**
- **1-800-387-1143 (Canada)**

Or

Visit us on the Worldwide Web at:

- www.techauthority.com (U.S.)

INDEX

Adding Washing Fluid 215
Air Bag 124
Advance Front Air Bag 124
Air Bag Operation 126
Air Bag Warning Light 123
Driver Knee Air Bag 127
Enhanced Accident Response 133, 208
Event Data Recorder (EDR) 208
Front Air Bag 124
If Deployment Occurs 132
Knee Impact Bolsters 127
Maintaining Your Air Bag System 134
Maintenance 134
Side Air Bags 127
Transporting Pets 151
Air Bag Light 92, 123, 152
Air Conditioner Maintenance 222
Air Conditioner Refrigerant 222
Air Conditioner System 222
Air Conditioning Filter 73
Air Conditioning, Operating Tips 72
Air Pressure
Tires 235
Alarm
Security Alarm 42
Alarm System
Security Alarm 42
Alterations/Modifications
Vehicle 5
Anti-Lock Brake System (ABS) 102
Anti-Lock Warning Light 95, 98, 99
Arming System
Security Alarm 42
Audio Systems (Radio). 260
Automatic Dimming Mirror 56
Automatic Transmission 160
Gear Ranges 161
Auxiliary Driving Systems 107

Battery 93, 215
Charging 16
Charging System Light 93
Belts, Seat 152
Body Mechanism Lubrication 223
B-Pillar Location 230
Brake Assist System. 103
Brake Fluid 257
Brake, Parking. 158
Brake System 225
Anti-Lock (ABS) 102

Fluid Check 225
Master Cylinder 225
Parking 158
Warning Light 92
Bulb Replacement 182
Bulbs, Light 154, 182

Camera, Rear 172
Capacities, Fluid 256
Car Washes. 249
Cellular Phone 273
Certification Label 173
Chains, Tire 245
Changing A Flat Tire 226
Charging 22
AC Level 1 22
AC Level 2 35
Cordset 24
Indicator 32
Times 36
Troubleshooting 28
Checking Your Vehicle For Safety 152
Checks, Safety. 152
Child Restraint 135
Child Restraints
Booster Seats 139
Child Seat Installation 148
How To Stow An unused ALR Seat Belt 145
Infant And Child Restraints 138
Lower Anchors And Tethers For Children 141
Older Children And Child Restraints 138
Seating Positions 140
Cleaning
Wheels 244
Climate Control 65
Automatic 66, 71
Compact Disc (CD) Maintenance. 279
Compact Spare Tire 242
Contract, Service 284
Cooling System
Cooling Capacity 256
Selection Of Coolant (Antifreeze) 257
Corrosion Protection 249
Cruise Control (Speed Control) 165
Cruise Light 99
Cupholders 80
Customer Assistance 282
Customer Programmable Features. 261
Cybersecurity 260

Daytime Running Lights 58, 59
Defroster, Windshield 152
Diagnostic System, Onboard 100
Dimmer Switch
  Headlight 58
Door Ajar 93
Door Ajar Light 93
Doors 45
Driver's Seat Back Tilt 47
Driving
  Through Flowing, Rising, Or Shallow Standing Water 177

Electrical Power Outlets 82
Electric Remote Mirrors 57
Electric Vehicle Features 18
Electric Vehicle Supply Equipment (EVSE) 24
Electronic Stability Control (ESC) 104
Emergency, In Case Of
  Hazard Warning Flasher 182
  Jacking 226
  Towing 207
Engine
  Compartment 214
  Starting 157
Enhanced Accident Response Feature 133, 208
Exterior Lighting 58
Exterior Lights 58, 154

Filters
  Air Conditioning 73
Flashers
  Turn Signals 58, 99, 154
Flash-To-Pass 58
Fluid Leaks 154
Fluid Level Checks
  Brake 225
Fluids And Lubricants 257
Fluids And Lubricants And Genuine Parts 257
Fog Lights 58, 60
Fold-Flat Seats 47
Freeing A Stuck Vehicle 206
Fuses 186

Gear Ranges 161
General Information 112, 274
General Maintenance 216
Glass Cleaning 252
GVWR 173

Hazard
Driving Through Flowing, Rising, Or Shallow Standing Water 177
Headlights 58
Cleaning 249
High Beam/Low Beam Select Switch 58
Lights On Reminder 58
Passing 58, 59
Switch 58, 59
Time Delay 58
Head Restraints 52
Heated Mirrors 56, 58
Heated Seats. 50
High Voltage Battery 16
Hood Prop 78
Hood Release 78

Ignition 39
Switch 39
Immobilizer (Sentry Key). 41
Instrument Cluster
Descriptions 99
Display 87
Instrument Cluster 86
Instrument Cluster Display
Instrument Cluster Display 86
Instrument Panel Lens Cleaning 252
Interior Appearance Care 251
Interior Lights. 61
iPod/USB/MP3 Control. 273

Jack Operation 226

Key Fob
Programming Additional Key Fobs 38, 42
Key-In Reminder. 41
Keys 36
Replacement 42
Sentry (Immobilizer) 41

Lane Change And Turn Signals 58
Lane Change Assist 58, 61
Lap/Shoulder Belts 115
Latches. 154
Hood 78
Leaks, Fluid 154
Life Of Tires 238
Liftgate 84
Light Bulbs 154, 182

Lights 58, 154
Air Bag 92, 123, 152
Brake Assist Warning 106
Brake Warning 92
Bulb Replacement 182
Cruise 99
Daytime Running 58
Dimmer Switch, Headlight 58
Exterior 154
Headlights 58
High Beam 59
High Beam/Low Beam Select 58
Instrument Cluster 58
Lights On Reminder 58
Park 59, 99
Passing 58, 59
Seat Belt Reminder 94
Security Alarm 42
Service 182
Traction Control 106
Turn Signals 58, 60, 99, 154
Warning Instrument Cluster Descriptions 99
Loading Vehicle. 173
Tires 230
Locks
Power Door 46
Lubrication, Body 223
Lug Nuts/Bolts 255

Maintenance Free Battery 215
Maintenance, General 216
Maintenance Procedures. 216
Maintenance Schedule 211
Manual
Service 286
Master Cylinder
Brakes 225
Memory Seat 49
Mirrors 56
Automatic Dimming 56
Electric Powered 57
Heated 56, 58
Outside 56
Rearview 56
Modifications/Alterations
Vehicle 5
Mopar Parts 285
MP3 Control 273

Multi-Function Control Lever 58

Occupant Restraints 112
Onboard Diagnostic System 100
Operating Precautions 100
Operator Manual
  Owner's Manual 4, 286
Outside Rearview Mirrors 56
Owner's Manual (Operator Manual). 4

Paint Care. 249
Parking Brake 158
Passing Light 59
Pets 151
Placard, Tire And Loading Information 230
Power
  Door Locks 46
  Mirrors 57
  Outlet (Auxiliary Electrical Outlet) 82
  Steering 164
  Sunroof 75
Pregnant Women And Seat Belts 120
Pretensioners
  Seat Belts 120

Radial Ply Tires 236
Radio Frequency
  General Information 39, 42
Radio Operation 273
Rear Camera 172
Rear Liftgate. 84
Recreational Towing. 175
Release, Hood. 78
Reminder, Lights On 58
Reminder, Seat Belt 114
Remote Keyless Entry
  Programming Additional Key Fobs 42
Replacement Bulbs 182
Replacement Keys. 42
Replacement Tires 239
Reporting Safety Defects 285
Restraints, Child 135
Restraints, Head 52
Rotation, Tires. 246

Safety Checks Inside Vehicle. 152
Safety Checks Outside Vehicle 154
Safety Defects, Reporting 285
Safety Information, Tire 226
Safety Tips 152

Schedule, Maintenance 211
Seat Belt Reminder 94
Seat Belts 114, 152
Child Restraints 135
Energy Management Feature 120
Extender 119
Front Seat 114, 115, 117
Inspection 152
Lap/Shoulder Belt Operation 117
Lap/Shoulder Belts 115
Lap/Shoulder Belt Untwisting 119
Operating Instructions 117
Pregnant Women 120
Pretensioners 120
Rear Seat 115
Reminder 114
Seat Belt Extender 119
Seat Belt Pretensioner 120
Untwisting Procedure 119
Seat Belts Maintenance 251
Seats 47
Adjustment 47
Heated 50
Rear Folding 47
Tilting 47
Security Alarm 42
Selection Of Coolant (Antifreeze) 257
Sentry Key
Key Programming 42
Sentry Key (Immobilizer) 41
Service Assistance 282
Service Contract 284
Service Manuals 286
Settings
Personal 261
Shoulder Belts 115
Side View Mirror Adjustment 56
Signals, Turn 58, 60, 99, 154
Snow Chains (Tire Chains) 245
Snow Tires 241
Spare Tires 241, 242, 243
Speed Control
Cancel 168
Resume 168
Speed Control (Cruise Control) 165
Starting 157
Button 39
Steering
Power 164
Tilt Column 55

Wheel, Heated 55
Wheel, Tilt 55
Steering Wheel Audio Controls 272
Storage. 80
Storage, Vehicle. 72
Stuck, Freeing 206
Sun Roof 75
Supplemental Restraint System – Air Bag. 124

Telescoping Steering Column 55
Temperature Control, Automatic (ATC) 71
Tilt Steering Column 55
Time Delay
Headlight 58
Tire And Loading Information Placard. 230
Tire Markings 227
Tires 154, 234, 241, 247
Aging (Life Of Tires) 238
Air Pressure 234
Chains 245
Changing 226
Compact Spare 242
General Information 234, 241
High Speed 236
Inflation Pressure 235
Jacking 226
Life Of Tires 238
Load Capacity 230, 231
Pressure Monitoring System (TPMS) 96
Quality Grading 247
Radial 236
Replacement 239
Rotation 246
Safety 226, 234
Snow Tires 241
Spare Tires 241, 243
Spinning 237
Tread Wear Indicators 238
Wheel Nut Torque 255
Tire Safety Information. 226
Tire Service Kit. 194, 195, 196, 197, 200, 201
To Open Hood 78
Towing 175
Disabled Vehicle 207
Recreational 175
Towing Behind A Motorhome 175
Traction 176
Traction Control 103
Trailer Towing. 175

Transmission
Automatic 160
Fluid 257
Transporting Pets 151
Tread Wear Indicators 238
Turn Signals 58, 60, 99

Uconnect
Uconnect Settings 261
Uniform Tire Quality Grades 247
Untwisting Procedure, Seat Belt 119
USB 273

Vehicle Identification Number (VIN) 254
Vehicle Loading 173, 231
Vehicle Modifications/Alterations. 5
Vehicle Security Alarm. 42
Vehicle Storage 72
Voice Recognition System (VR) 275

Warning Lights (Instrument Cluster Descriptions) 95
Warnings And Cautions 5
Warranty Information 285

Washer
Adding Fluid 215
Washers, Windshield 63, 64
Washing Vehicle 249
Water
Driving Through 177
Wheel And Wheel Tire Care 244
Wheel And Wheel Tire Trim 244
Wind Buffeting 75, 76
Window Fogging 73
Windows 74
Windshield Defroster 152
Windshield Washers 63, 64
Windshield Wiper Blades 223
Windshield Wipers 63
Wipers Blade Replacement 223

INSTALLATION OF RADIO TRANSMITTING EQUIPMENT

Special design considerations are incorporated into this vehicle's electronic system to provide immunity to radio frequency signals. Mobile two-way radios and telephone equipment must be installed properly by trained personnel. The following must be observed during installation.

The positive power connection should be made directly to the battery and fused as close to the battery as possible. The negative power connection should be made to body sheet metal adjacent to the negative battery connection. This connection should not be fused.

Antennas for two-way radios should be mounted on the roof or the rear area of the vehicle. Care should be used in mounting antennas with magnet bases. Magnets may affect the accuracy or operation of the compass on vehicles so equipped.

The antenna cable should be as short as practical and routed away from the vehicle wiring when possible. Use only fully shielded coaxial cable.

Carefully match the antenna and cable to the radio to ensure a low Standing Wave Ratio (SWR).

Mobile radio equipment with output power greater than normal may require special precautions.

All installations should be checked for possible interference between the communications equipment and the vehicle's electronic systems.

⚠ WARNING:

Operating, servicing and maintaining a passenger vehicle or off-road highway motor vehicle can expose you to chemicals including engine exhaust, carbon monoxide, phthalates, and lead, which are known to the State of California to cause cancer and birth defects or other reproductive harm. To minimize exposure, avoid breathing exhaust, do not idle the engine except as necessary, service your vehicle in a well-ventilated area and wear gloves or wash your hands frequently when servicing your vehicle. For more information go to www.P65Warnings.ca.gov/passenger-vehicle.

19BEV-126-AA
©2018 FCA US LLC. All Rights Reserved.
FIAT is a registered trademark of FCA Group
Marketing S.p.A., used under license by FCA US LLC.

First Edition
Printed in U.S.A.