SECTION CL

CONTENTS

RS5F70A, RS5F50A

PRECAUTIONS 2
Precautions 2
PREPARATION 3
Special Service Tools 3
Commercial Service Tools 3
NOISE, VIBRATION AND HARSHNESS (NVH) TROUBLESHOOTING 4
NVH Troubleshooting Chart 4
CLUTCH 4
CLUTCH SYSTEM 5
Components - RHD Model with QG Engine - 5
Components - LHD Model with QG Engine - 6
Components - RHD Model with YD Engine - 7
Components - LHD Model with YD Engine - 8
Inspection and Adjustment 9
CLUTCH PEDAL INSPECTION 9
CLUTCH PEDAL ADJUSTMENT 10
AIR BLEEDING PROCEDURE 10
CLUTCH MASTER CYLINDER 11
Components 11
Removal 12
Installation 12
Disassembly 12
Inspection 12
Assembly 13
OPERATING CYLINDER 14
Components 14
Removal 14
Disassembly 14
Inspection 14
Assembly 15
Installation 15
PIPING 16
Removal 16
Installation 16

RS5F70A

CLUTCH RELEASE MECHANISM 17
Components 17
Removal 17
Inspection 17
Installation 17

RS5F50A

CLUTCH RELEASE MECHANISM 20
Components 20
Removal 20
Inspection 20
Installation 20

RS5F70A, RS5F50A

CLUTCH DISC, CLUTCH COVER AND FLYWHEEL 22
Components 22
Inspection and Adjustment 22
CLUTCH DISC 22
CLUTCH COVER 23
FLYWHEEL 23
Installation 23
SERVICE DATA AND SPECIFICATIONS (SDS) 24
Clutch Control System 24
Clutch Master Cylinder 24
Clutch Operating Cylinder 24
Clutch Disc 24
Clutch Cover 24
Clutch Pedal 24

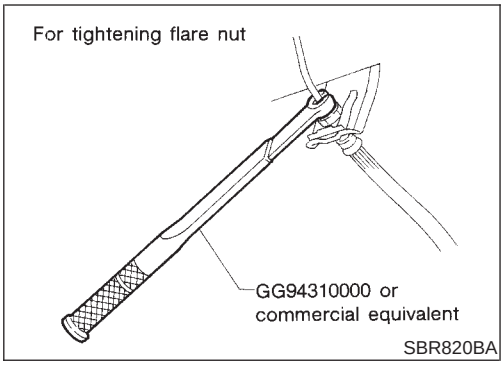

Precautions

NLCL0001

- **Recommended fluid is brake fluid "DOT 4". Refer to MA-20, "Fluid and Lubricants".**
- **Never reuse drained brake fluid.**
- **Be careful not to splash brake fluid on painted areas.**
- **When removing and installing clutch piping, use Tool.**
- **Use new brake fluid to clean or wash all parts of master cylinder and operating cylinder.**
- **Never use mineral oils such as gasoline or kerosene. It will ruin the rubber parts of the hydraulic system.**

WARNING:

After cleaning clutch disc, wipe it with a dust collector. Do not use compressed air.

Special Service Tools

NLCL0002

Tool number Tool name	Description	
GG94310000 Flare nut torque wrench	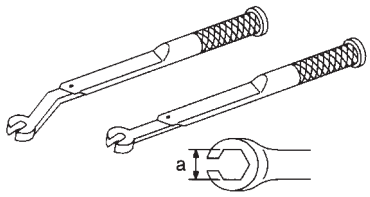 NT406	Removing and installing clutch piping **a: 10 mm (0.39 in)**
KV30101600 (New) KV30101000 (Former) Clutch aligning bar	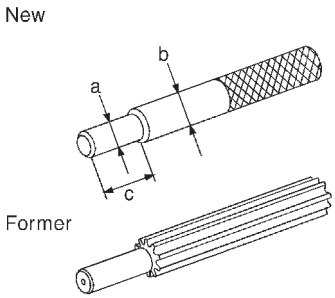 NT645	Installing clutch cover and clutch disc (F70A) **a: 15.9 mm (0.626 in) dia.** **b: 17.9 mm (0.705 in) dia.** **c: 40 mm (1.57 in)**
ST20630000 Clutch aligning bar	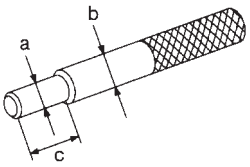 NT405	Installing clutch cover and clutch disc (F50A) **a: 15.8 mm (0.622 in) dia.** **b: 22.9 mm (0.902 in) dia.** **c: 45.0 mm (1.772 in)**
ST20050240 Diaphragm spring adjusting wrench	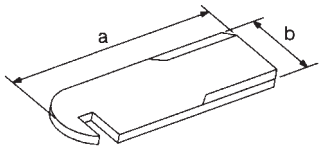 NT404	Adjusting unevenness of diaphragm spring of clutch cover **a: 150 mm (5.91 in)** **b: 25 mm (0.98 in)**
KV32101000 Pin punch	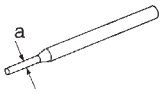 NT410	Removing and installing spring pin **a: 4 mm (0.16 in) dia.**

Commercial Service Tools

NLCL0003

Tool name	Description	
1 Flare nut crowfoot 2 Torque wrench	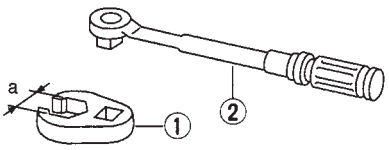 NT360	Removing and installing clutch piping **a: 10 mm (0.39 in)**

NVH Troubleshooting Chart

NLCL0004S01

Use the chart below to help you find the cause of the symptom. The numbers indicate the order of the inspection. If necessary, repair or replace these parts.

CLUTCH

NLCL0004S0101

Reference page		CL-10	CL-10	CL-11	CL-14	Refer to EM-70, “Removal and Installation” (QG engine model) and EM-197, “Removal and Installation” (YD engine model).	CL-17 (RS5F70A), CL-20 (RS5F50A)	CL-22	CL-22	CL-22	CL-22	CL-22	CL-22	CL-22	CL-22	CL-23	CL-23	CL-23	CL-23
SUSPECTED PARTS (Possible cause)		CLUTCH PEDAL (Free play out of adjustment)	CLUTCH LINE (Air in line)	MASTER CYLINDER PISTON CUP (Damaged)	OPERATING CYLINDER PISTON CUP (Damaged)	ENGINE MOUNTING (Loose)	RELEASE BEARING (Worn, dirty or damaged)	CLUTCH DISC (Out of true)	CLUTCH DISC (Runout is excessive)	CLUTCH DISC (Lining broken)	CLUTCH DISC (Dirty or burned)	CLUTCH DISC (Oily)	CLUTCH DISC (Worn out)	CLUTCH DISC (Hardened)	CLUTCH DISC (Lack of spline grease)	DIAPHRAGM SPRING (Damaged)	DIAPHRAGM SPRING (Out of tip alignment)	PRESSURE PLATE (Distortion)	FLYWHEEL (Distortion)
Symptom	Clutch grabs/chatters					1			2			2	2	2			2		
	Clutch pedal spongy		1	2	2														
	Clutch noisy						1												
	Clutch slips	1										2	2			3		4	5
	Clutch does not disengage	1	2	3	4			5	5	5	5	5			5	6	6	7	

Components — RHD Model with QG Engine —

NLCL0041

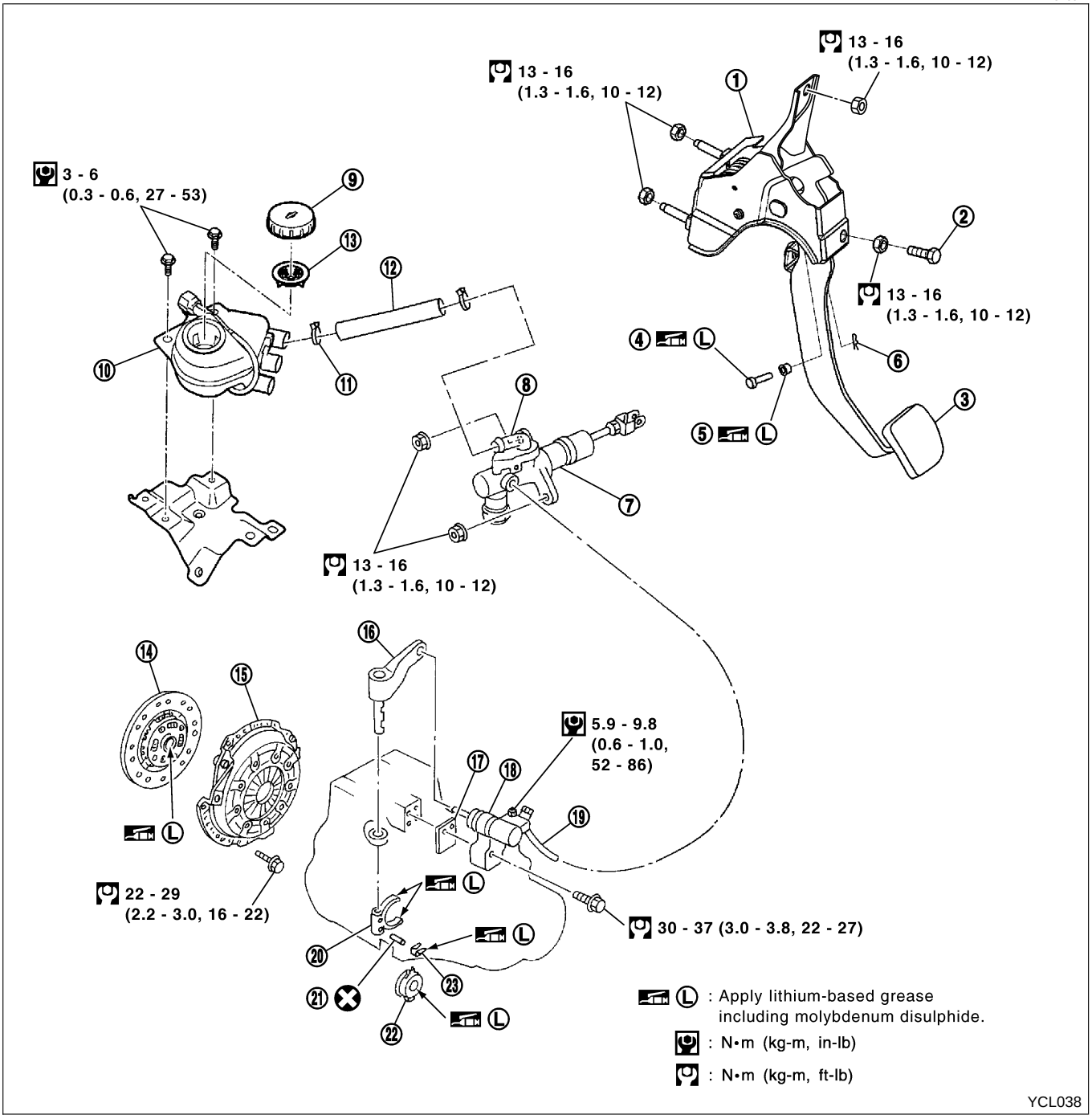

1. Clutch pedal bracket
2. Pedal stopper bolt
3. Clutch pedal
4. Clevis pin
5. Bushing
6. Snap pin
7. Clutch master cylinder
8. Nipple
9. Reservoir cap
10. Reservoir tank
11. Hose clamp
12. Hose
13. Filter
14. Clutch disc
15. Clutch cover
16. Withdrawal lever
17. Spacer
18. Operating cylinder
19. Clutch hose
20. Clutch lever
21. Spring pin
22. Release bearing
23. Release bearing spring

Components — LHD Model with QG Engine —

NLCL0048

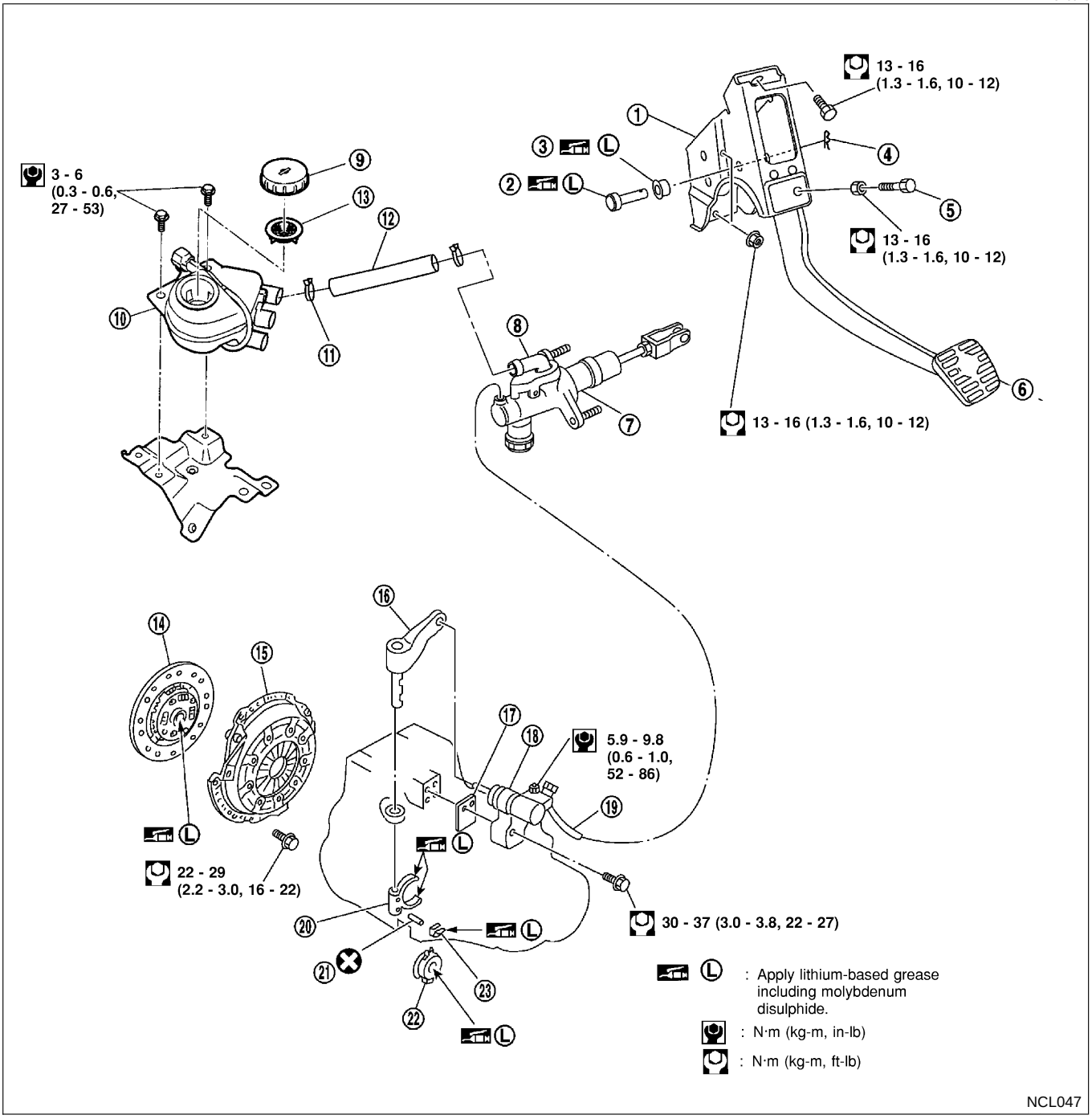

1. Clutch pedal bracket
2. Clevis pin
3. Bushing
4. Snap pin
5. Pedal stopper bolt
6. Clutch pedal
7. Clutch master cylinder
8. Nipple
9. Reservoir cap
10. Reservoir tank
11. Hose clamp
12. Hose
13. Filter
14. Clutch disc
15. Clutch cover
16. Withdrawal lever
17. Spacer
18. Operating cylinder
19. Clutch hose
20. Clutch lever
21. Spring pin
22. Release bearing
23. Release bearing spring

Components — RHD Model with YD Engine —

NLCL0005

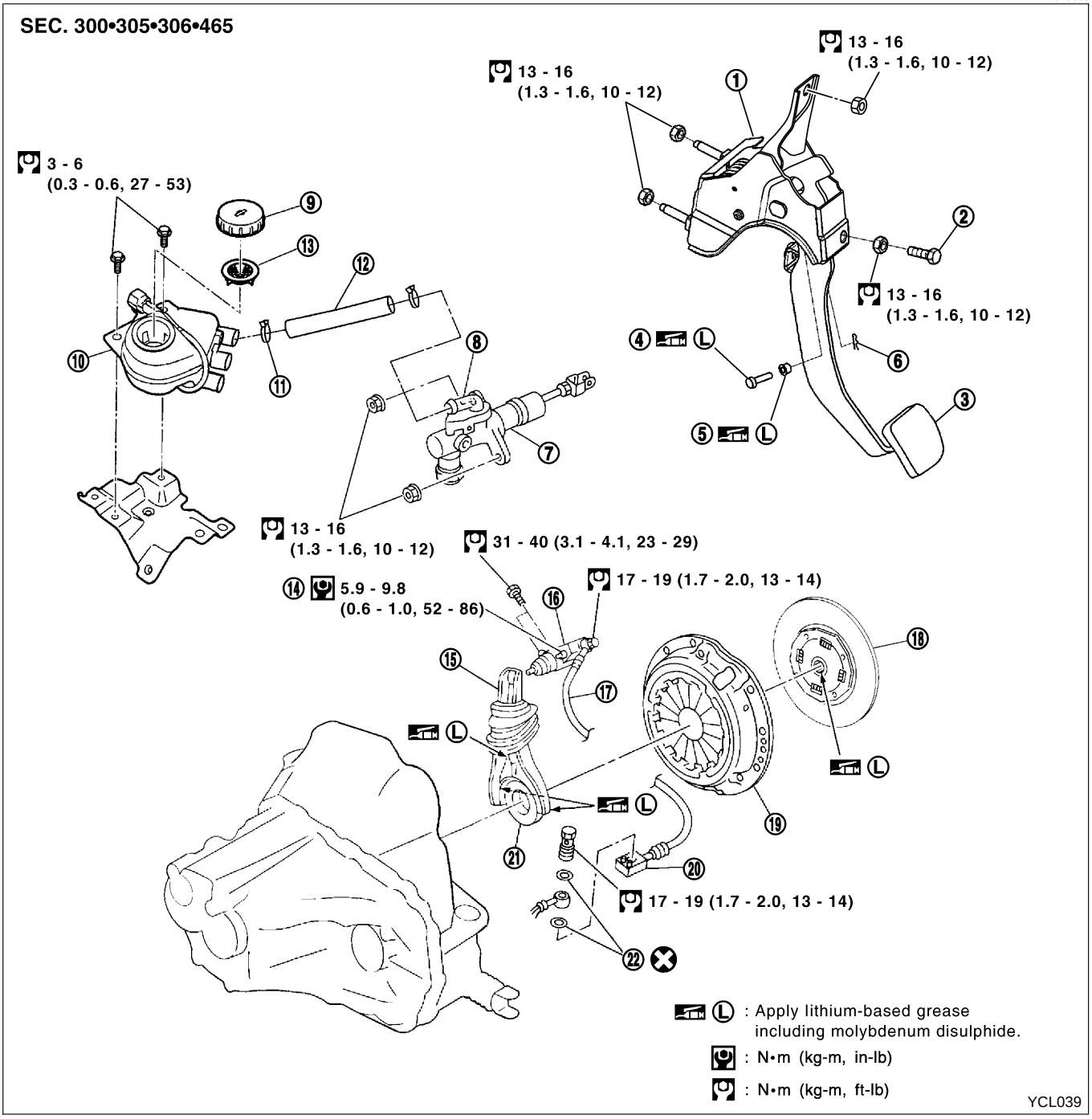

1. Clutch pedal bracket
2. Pedal stopper bolt
3. Clutch pedal
4. Clevis pin
5. Bushing
6. Snap pin
7. Clutch master cylinder
8. Nipple
9. Reservoir cap
10. Reservoir tank
11. Hose clamp
12. Hose
13. Filter
14. Air bleeder screw
15. Withdrawal lever
16. Operating cylinder
17. Clutch hose
18. Clutch disc
19. Clutch cover
20. Clutch hose connector
21. Release bearing
22. Washer

Components — LHD Model with YD Engine —

NLCL0049

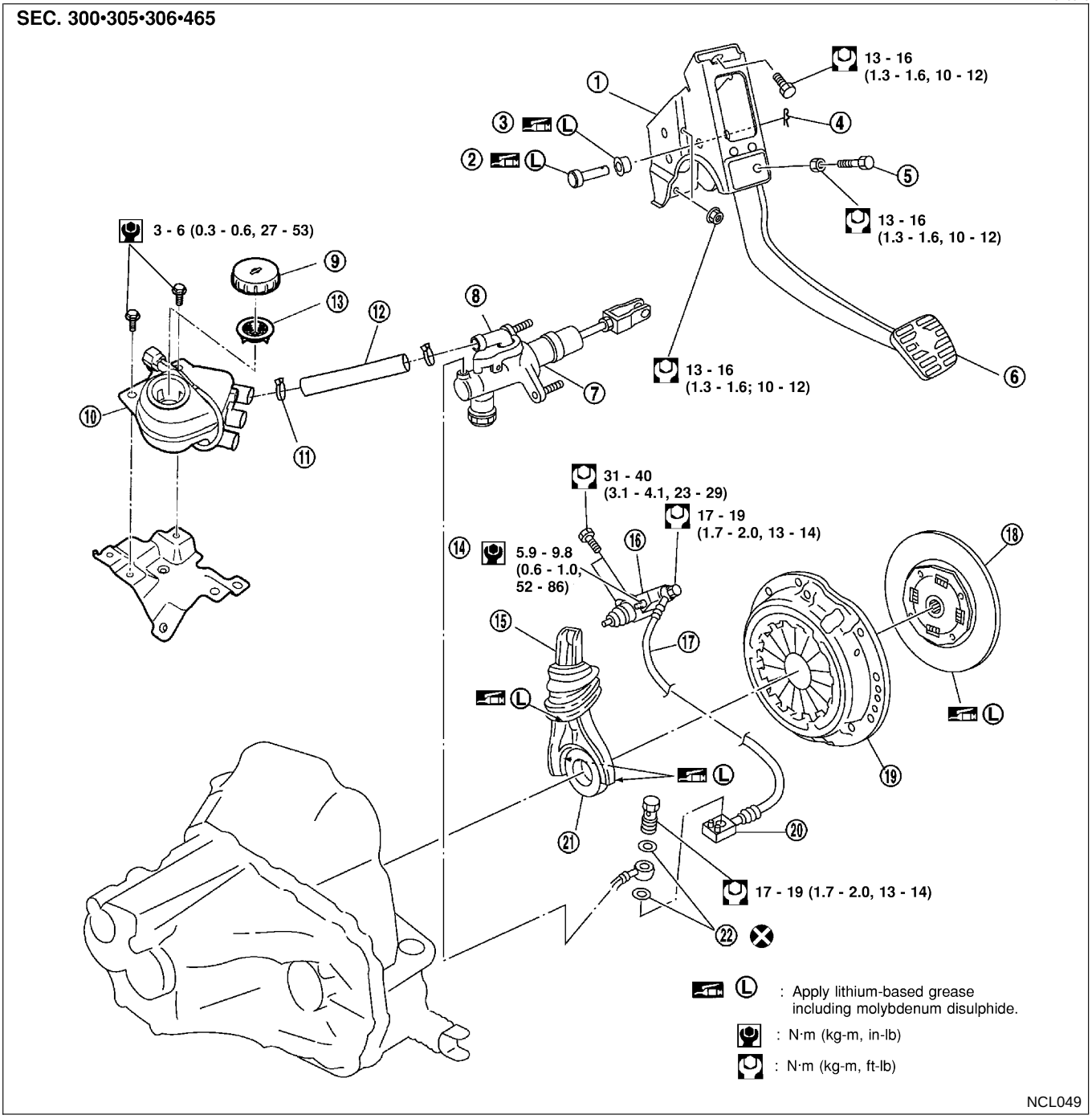

1. Clutch pedal bracket
2. Clevis pin
3. Bushing
4. Snap pin
5. Pedal stopper bolt
6. Clutch pedal
7. Clutch master cylinder
8. Nipple
9. Reservoir cap
10. Reservoir tank
11. Hose clamp
12. Hose
13. Filter
14. Air bleeder screw
15. Withdrawal lever
16. Operating cylinder
17. Clutch hose
18. Clutch disc
19. Clutch cover
20. Clutch hose connector
21. Release bearing
22. Washer

Inspection and Adjustment

NLCL0006

CLUTCH PEDAL INSPECTION

NLCL0006S04

Pedal Stroke

NLCL0006S0401

Check clutch pedal stroke by using a 1–meter rule to measure the total pedal stroke. Place end of rule onto the middle of the clutch pedal pad. Place a book/clipboard on the driver's seat to set a reference point, ensure the book/clipboard does not move during pedal depression. Mark (A) the pedal fully up position on the rule. Depress the clutch pedal and mark (B) the rule again next to the reference point on the book/clipboard. Measure the distance between the marks (A and B), this is the actual pedal stroke (S). Check the specified pedal stroke in the table, adjust actual pedal stroke if necessary (refer to **"CLUTCH PEDAL ADJUSTMENT"**).

NOTE:

- Do not use steering wheel as a reference point, angle gives incorrect reading.
- Ensure there is no interference between the floor carpet and clutch pedal when fully depressed.

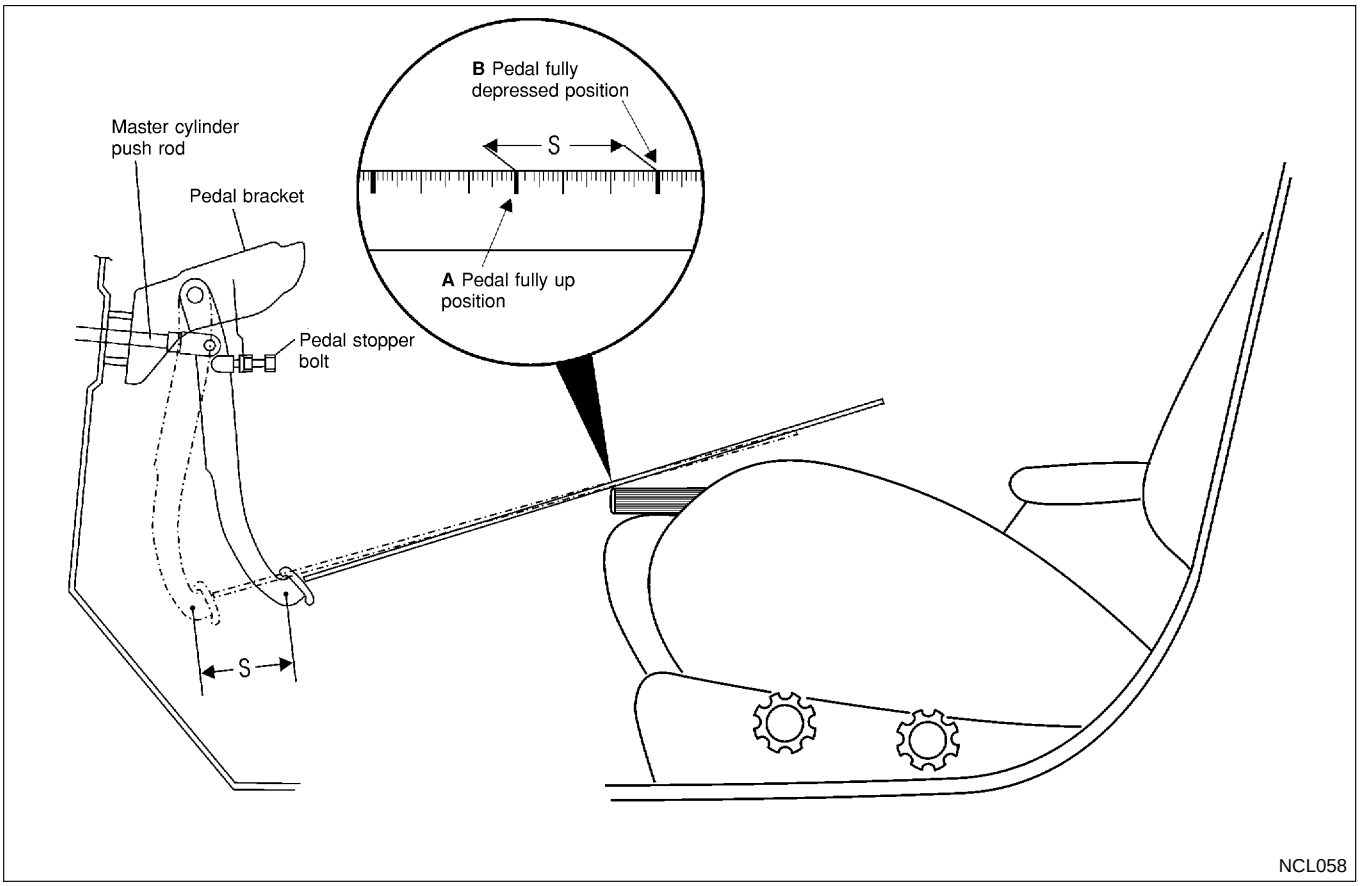

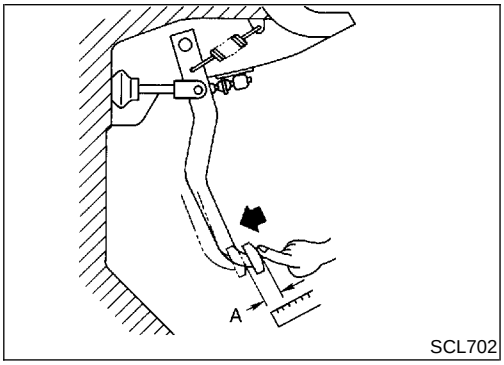

Pedal Free Play

NLCL0006S0402

Check pedal free play, if out of specification refer to **"CLUTCH PEDAL ADJUSTMENT"**

- Push on the clutch pedal until resistance is felt, and check the distance the pedal moves.

CLUTCH PEDAL ADJUSTMENT

NLCL0006S01

Pedal Stroke

NLCL0006S0101

1. Loosen the pedal stopper bolt completely (so there is no contact between pedal and stopper bolt).
2. Adjust pedal stroke to the specified value with the master cylinder push rod.
3. Adjust the pedal stopper bolt until it is just in contact with the pedal, then tighten the lock nut.
4. Once stroke is set to specification, adjust clutch pedal free play.

Pedal stroke "S".
Refer to "SDS", CL-24.

Pedal Free Play

NLCL0006S0102

1. Adjust pedal free play to the specified value with the master cylinder push rod.
2. Tighten lock nut of the master cylinder push rod.

- Push on the clutch pedal until resistance is felt, and check the distance the pedal moves.

Pedal free play "A".
Refer to "SDS", CL-24.

QG engine model

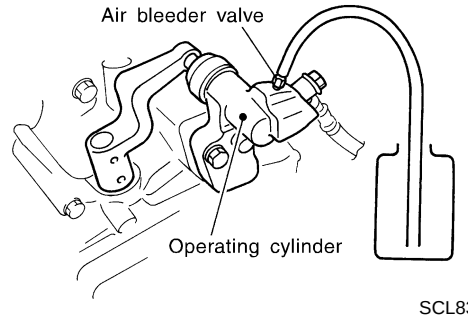

SCL838

YD engine model

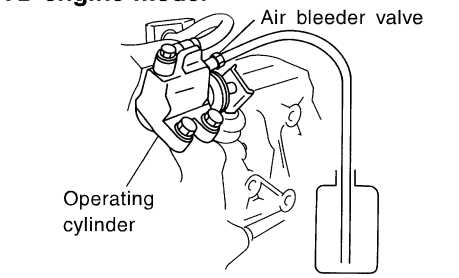

SCL839

AIR BLEEDING PROCEDURE

NLCL0006S02

1. Bleed air from clutch operating cylinder according to the following procedure.

- **Carefully monitor fluid level at reservoir during bleeding operation.**

a. Top up reservoir with recommended brake fluid.
b. Connect a transparent vinyl tube to air bleeder valve.
c. Slowly depress the clutch pedal to its full stroke and release it completely. Repeat this operation several times at 2 to 3 seconds intervals.
d. Open the air bleeder with the clutch pedal fully depressed.
e. Close the air bleeder.
f. Release the clutch pedal and wait at least 5 seconds.
g. Repeat steps c through f mentioned above, until clear brake fluid comes out of air bleeder valve.

Air bleeder valve tightening torque:
: 5.9 - 9.8 N·m (0.6 - 1.0 kg-m, 52 - 86 in-lb)

Components

NLCL0007

SEC. 305

RHD model

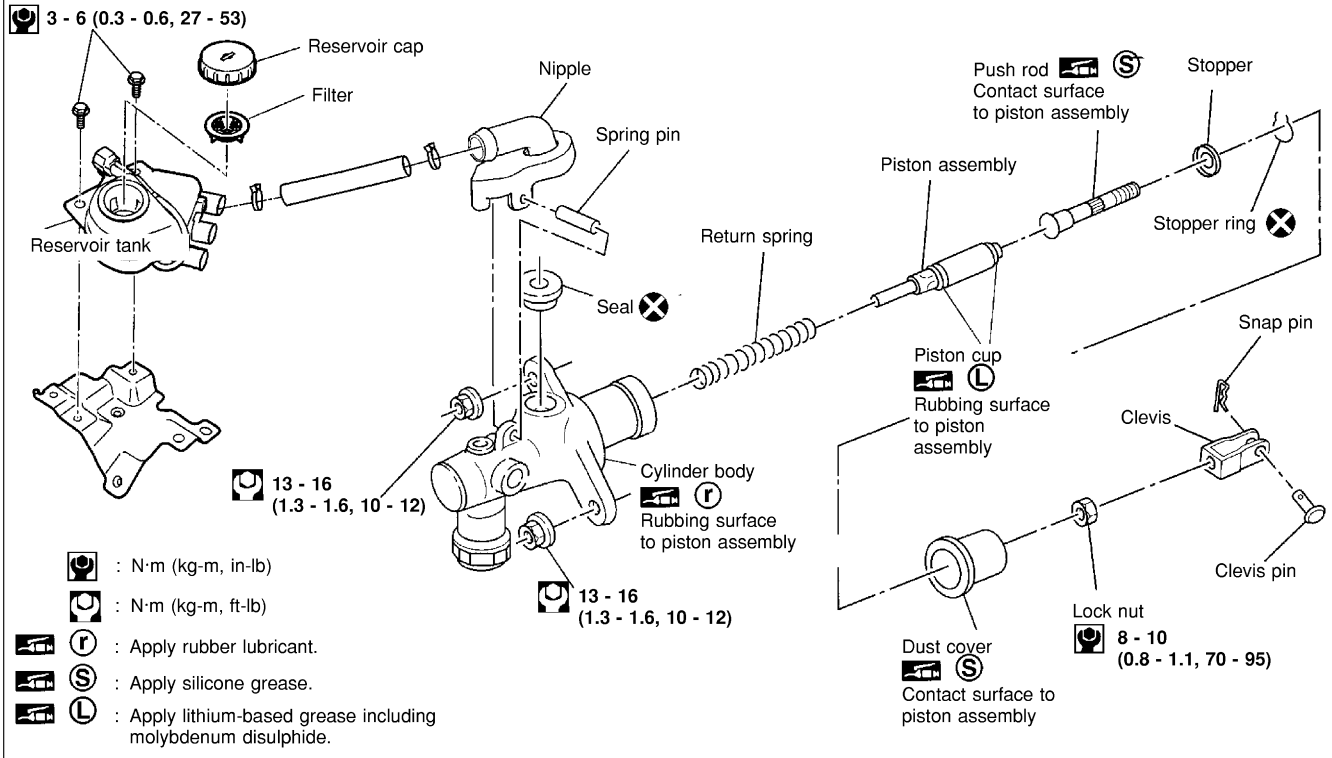

NCL052

SEC. 305

LHD model

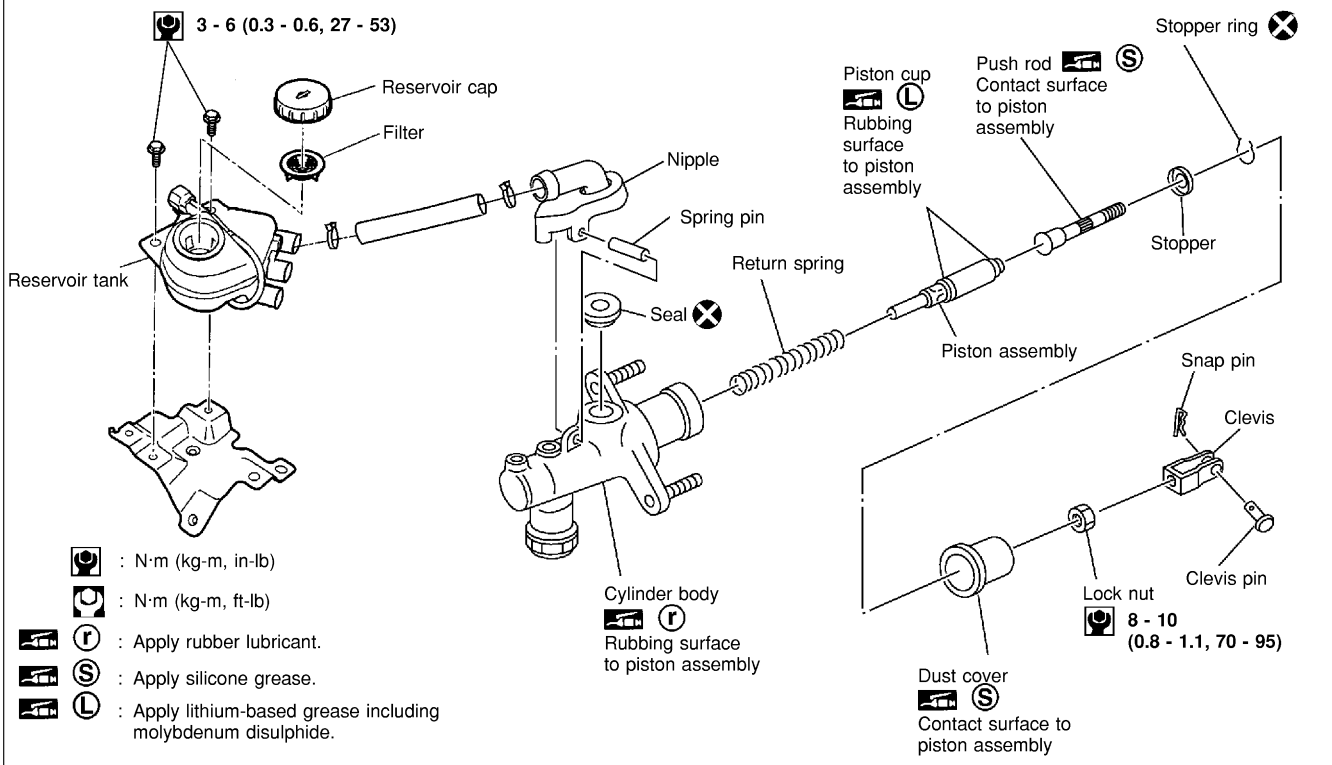

NCL053

Removal

NLCL0008

1. Drain brake fluid.

CAUTION:

Be careful not to splash brake fluid on painted areas; it may cause paint damage. If brake fluid is splashed on painted areas, wash it away with water immediately.

2. Remove clutch tube using a flare nut wrench.
3. Remove snap pin between clutch pedal and push rod, and remove clevis pin.
4. Unscrew master cylinder assembly mounting nuts and remove master cylinder assembly from vehicle.

Installation

NLCL0009

1. Connect clutch tube to master cylinder assembly, and hand-tighten flare nut.
2. Install master cylinder assembly to vehicle, and tighten mounting nuts to the specified torque.

   : 13 - 16 N·m (1.3 - 1.6 kg-m, 10 - 12 ft-lb)
3. Tighten clutch tube flare nut using a flare nut torque wrench.

   : 15 - 18 N·m (1.5 - 1.8 kg-m, 11 - 13 ft-lb)
4. After installing clevis pin, install snap pin to connect clutch pedal to push rod.
5. After finishing the operation, bleed air from clutch piping connector and operating cylinder. (Refer to “Air Bleeding Procedure”, CL-10.)

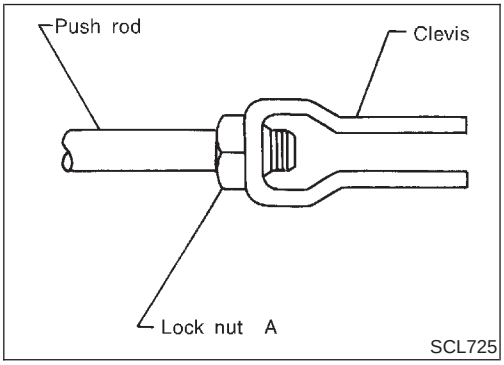

Disassembly

NLCL0010

1. Loosen push rod lock nut A to remove clevis and lock nut A.
2. Remove dust cover.
3. Remove stopper ring and stopper, and remove push rod from cylinder body. During removal, keep push rod depressed, to prevent piston inside master cylinder from popping out.
4. Remove piston assembly from cylinder body.

Inspection

NLCL0011

Check the following items, and replace if necessary.

- Rubbing surface of cylinder and piston, for uneven wear, rust or damage
- Piston with piston cup, for wear or damage
- Return spring, for wear or damage
- Dust cover, for cracks, deformation or damage
- Reservoir, for deformation or damage

Assembly

NLCL0012

1. Apply rubber lubricant to the sliding part of piston assembly, and insert piston assembly.
2. After installing stopper to push rod, install stopper ring while keeping piston assembly depressed by hand, so that piston assembly will not pop out.

CAUTION:

Stopper ring cannot be reused. Always use a new stopper ring for assembly.

3. Install dust cover.
4. Install clevis to push rod, and tighten lock nut A to the specified torque.

   : 8 - 10 N·m (0.8 - 1.1 kg-m, 70 - 95 in-lb)

5. Install spring pin using a pin punch.

Components

NLCL0019

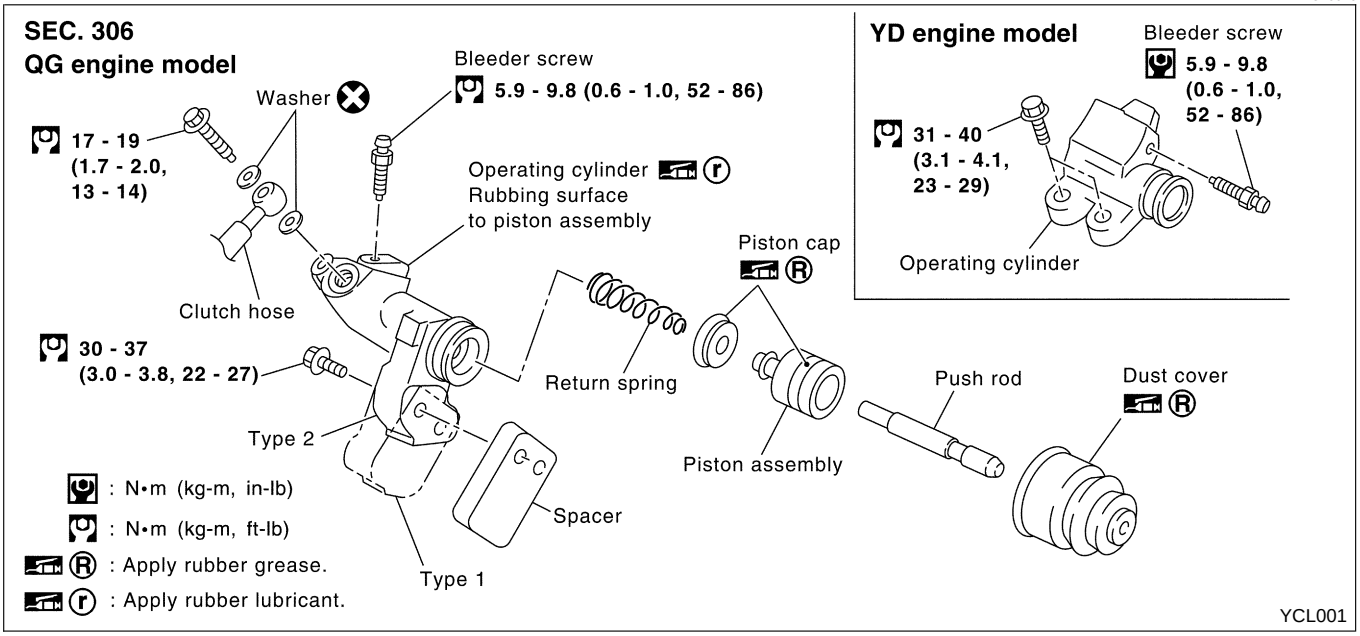

Removal

NLCL0020

1. Drain brake fluid.

CAUTION:

Be careful not to splash brake fluid on painted areas; it may cause paint damage. If brake fluid is splashed on painted areas, wash it away with water immediately.

2. Remove union bolt and clutch hose from operating cylinder.
3. Remove operating cylinder mounting bolts, and remove cylinder from vehicle.

Disassembly

NLCL0021

Remove dust cover, and remove piston assembly from cylinder body.

Inspection

NLCL0022

Inspect for following, and replace parts if necessary.

- Damage, foreign material, wear, rust, and pinholes on the cylinder inner surface, piston, and sliding part of piston cup
- Weak spring
- Crack and deformation of dust cover

Assembly

NLCL0023

1. Apply recommended rubber grease to piston cup and piston, and insert piston assembly.
2. Install dust cover.

Installation

NLCL0024

Install the components in the reverse order of removal. Adhere to the operations described below.

CAUTION:

Install the hose without twisting it.

- **The copper washer of the union bolt should not be reused. Always use a new copper washer for installation.**
- **After finishing the operation, bleed air from the clutch piping connector and operating cylinder. Refer to "Air Bleeding Procedure", CL-10.**

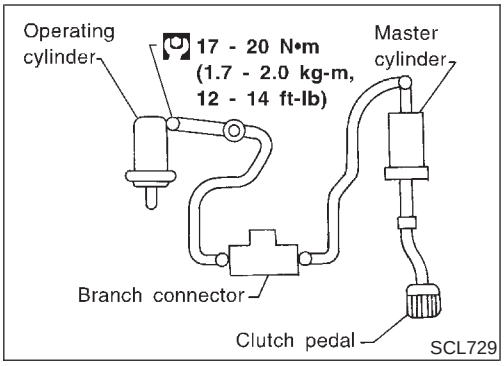

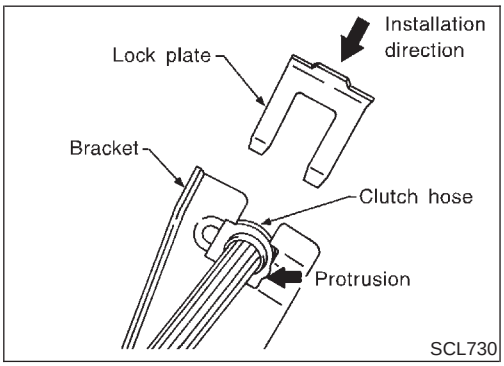

Removal

NLCL0042

1. Remove fuel filter mounting bracket.
2. Remove air cleaner and air duct.
3. Drain brake fluid.

CAUTION:

Be careful not to splash brake fluid on painted areas; it may cause paint damage. If brake fluid is splashed on painted areas, wash it away with water immediately.

4. Remove flare nut using a flare nut wrench.
5. Remove clutch hose and clutch tube.

Installation

NLCL0043

1. When installing clutch hose to bracket, face lock plate in the correct direction as shown to secure clutch hose.

CAUTION:

Install clutch hose without twisting or bending it.

2. Tighten flare nut to the specified torque, using a flare nut wrench.

   : 15 - 18 N·m (1.5 - 1.8 kg-m, 11 - 13 ft-lb)

CAUTION:

Be careful not to damage flare nut and clutch tube.

3. Install clutch hose to operating cylinder, and tighten mounting bolts to the specified torque.

   : 17 - 19 N·m (1.7 - 2.0 kg-m, 13 - 14 ft-lb)

4. After finishing the operation, bleed air from the clutch piping. Refer to “Air Bleeding Procedure”, CL-10.

Components

NLCL0044

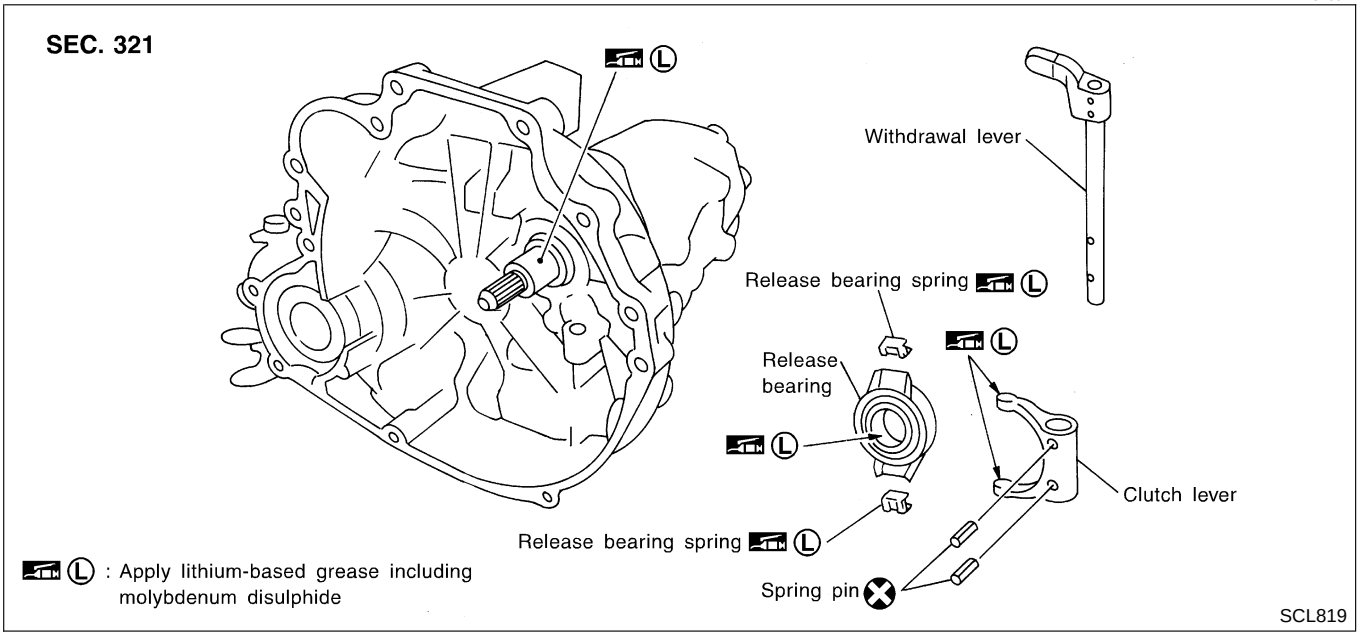

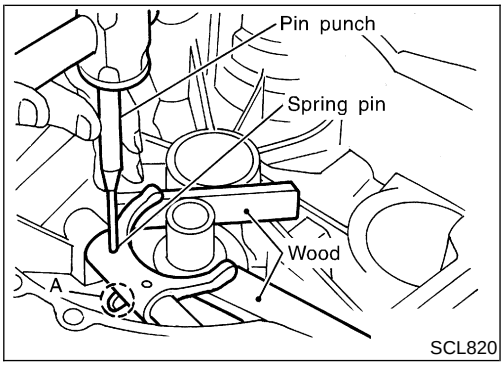

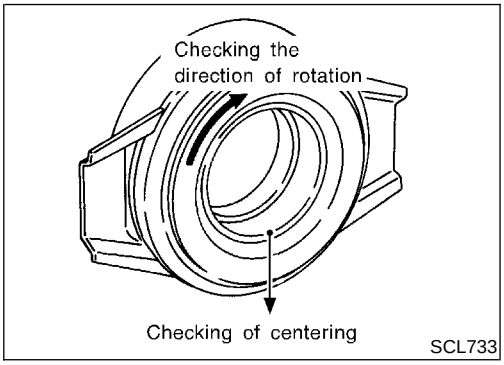

Removal

NLCL0045

1. Remove manual transaxle from vehicle. Refer to MT-19, “Removal”.
2. Move withdrawal lever enough to remove release bearing, and remove release bearing from clutch lever.
3. Support clutch lever claws with an appropriate wood block, align retaining pin with A in the figure, and drive out spring pin using a pin punch.
4. Pull out withdrawal lever and remove clutch lever.

Inspection

NLCL0046

- Replace the release bearing if it is seized, damaged, faulty in rotation direction, or has poor aligning function.
- Replace the withdrawal lever if its contact surface is worn abnormally.
- Replace the clutch lever if its contact surface is worn abnormally.
- Replace the dust seal if it is deformed or cracked.

Installation

NLCL0047

CAUTION:

- **Be sure to apply grease to the clutch components. Otherwise, abnormal noise, poor clutch disengagement, or clutch damage may occur. Wipe the excess grease off completely, because it may cause the clutch components to slip and shudder.**
- **Keep the clutch disc facing, pressure plate, and flywheel free of oil and grease.**

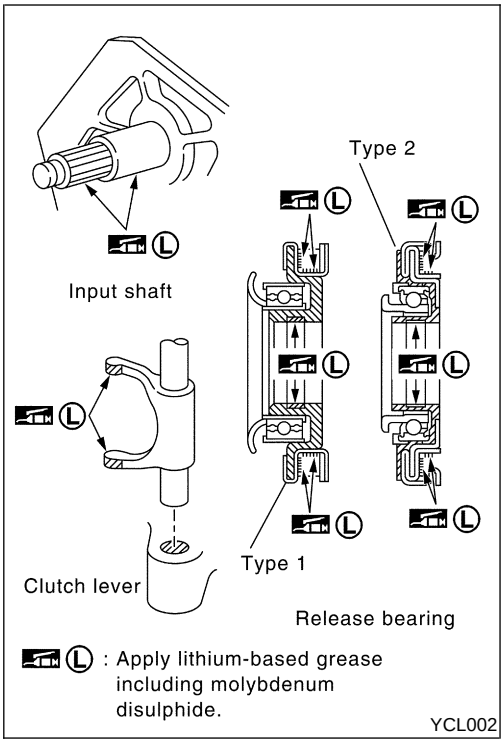

- **Clean old grease and abrasive materials off the grease application area.**
- **Apply approximately 1 mm (0.04 in)-thick clutch sleeve grease evenly on the sliding part of the clutch lever and the release bearing spring.**
- **Apply just enough clutch sleeve grease to fill up the release bearing inner groove.**
- **Apply the clutch grease to the clutch disc and the input shaft spline. Install the clutch disc to the input shaft, remove the excess grease around the shaft, and remove the clutch disc.**
- **Lightly and evenly apply the clutch sleeve grease on the sliding part of the release bearing, install the release bearing, remove the excess grease around the bearing, and remove the release bearing.**

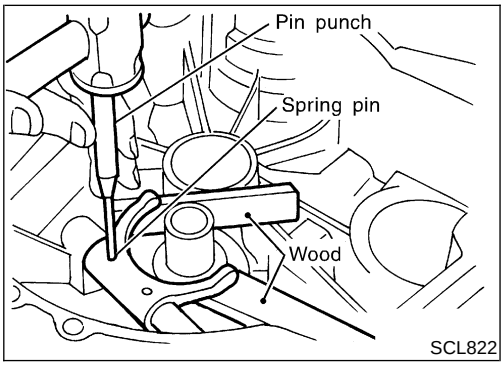

1. Assemble clutch lever to clutch housing, and insert withdrawal lever.
2. Support clutch lever claws with an appropriate wood block, and install a new spring pin using a pin punch.

CAUTION:
Spring pin cannot be reused.

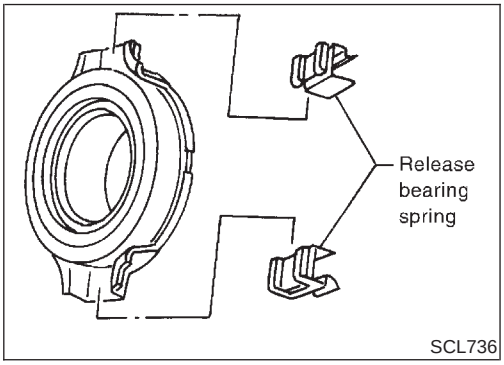

3. Install release bearing spring to release bearing as shown in the figure.

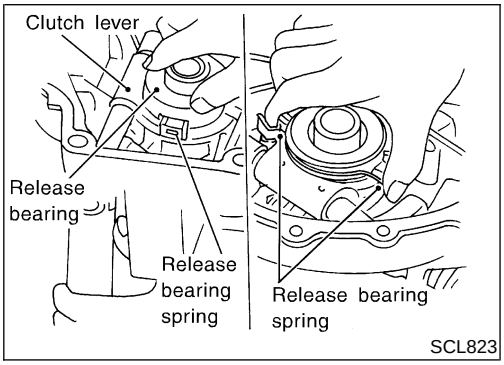

4. Operate withdrawal lever manually, press clutch spring from both sides, and install release bearing to clutch lever securely.
5. Make sure a click is heard when release bearing spring is pressed from both sides.

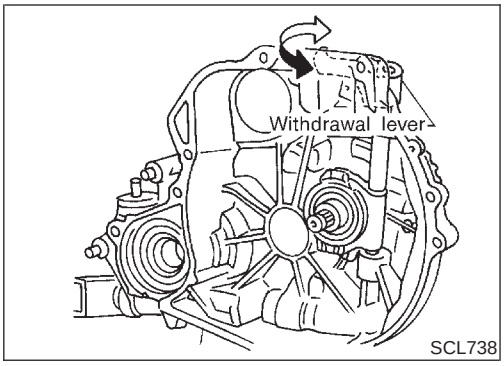

6. Make sure each sliding part operates smoothly when withdrawal lever is moved.

CAUTION:
Remove any excess grease with a shop towel.

Components

NLCL0027

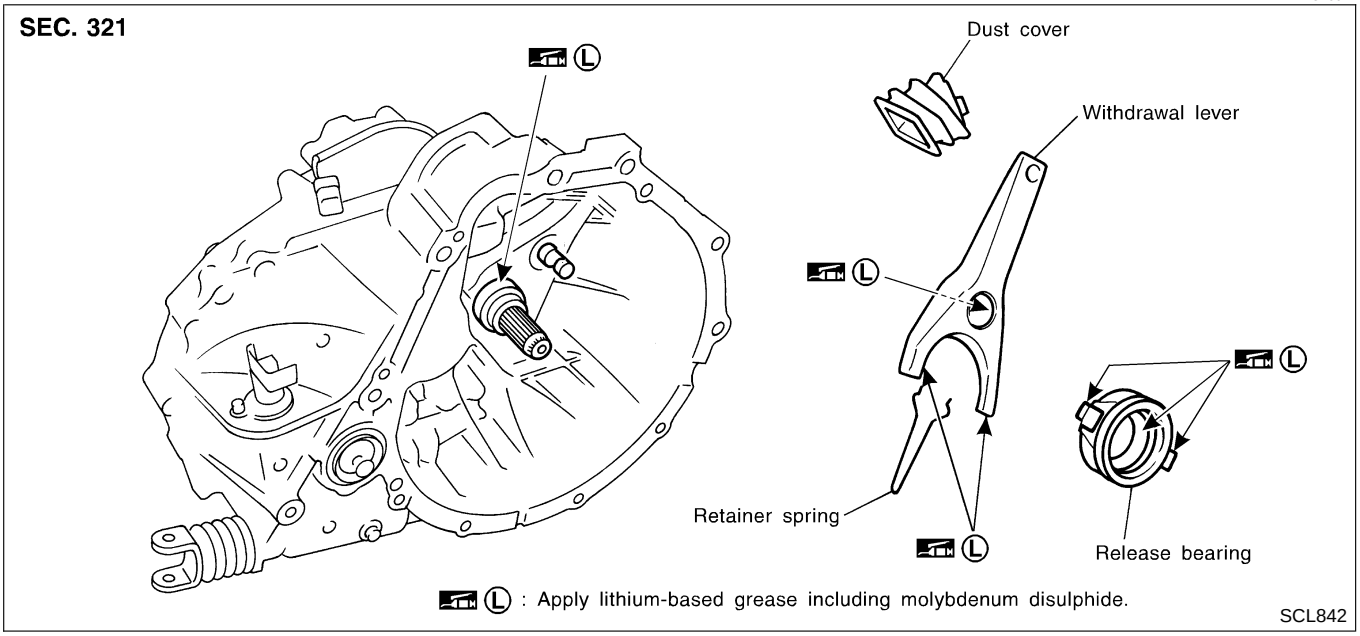

Removal

NLCL0028

1. Remove manual transaxle from vehicle. Refer to MT-21, “Removal”.
2. Move withdrawal lever enough to remove release bearing, and remove release bearing from clutch withdrawal lever.
3. Remove dust cover.
4. Remove retainer spring from withdrawal lever.

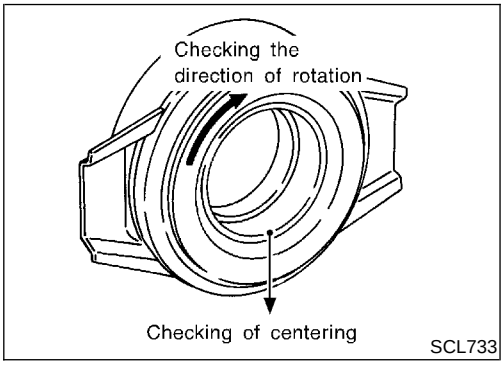

Inspection

NLCL0029

- Replace the release bearing if it is seized, damaged, faulty in rotation direction, or has poor aligning function.
- Replace the withdrawal lever if its contact surface is worn abnormally.
- Replace the dust cover if it is deformed or cracked.

Installation

NLCL0030

1. Apply a coat of grease to parts as instructed in the following cautions and notes before installation.

CAUTION:

- **Be sure to apply grease to the clutch components. Otherwise, abnormal noise, poor clutch disengagement, or clutch damage may occur. Wipe the excess grease off completely, because it may cause the clutch components to slip and shudder.**
- **Keep the clutch disc facing, pressure plate, and flywheel free of oil and grease.**

- **Clean old grease and abrasive materials off the grease application area.**

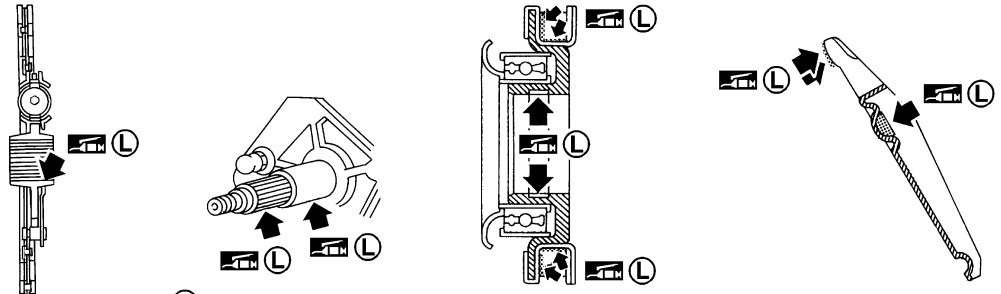

L : Apply lithium-based grease including molybdenum disulphide.

SCL815

NOTE:

- Equally apply a coat [approximately 1 mm (0.04 in) thick] of clutch sleeve grease to withdrawal lever and holder spring frictional surfaces.
- Apply a coat of clutch sleeve grease to the grooves on contact surfaces of the withdrawal lever ball pin and inner surface of release bearing so that grease application, make sure that grease is flush with grooves.
- Equally apply a thin coat of clutch sleeve grease to release bearing frictional surface. After grease application, install release bearing. Wipe off excess grease forced out during bearing installation. Remove release bearing.

2. Installation is in the reverse order of removal.

Components

NLCL0031

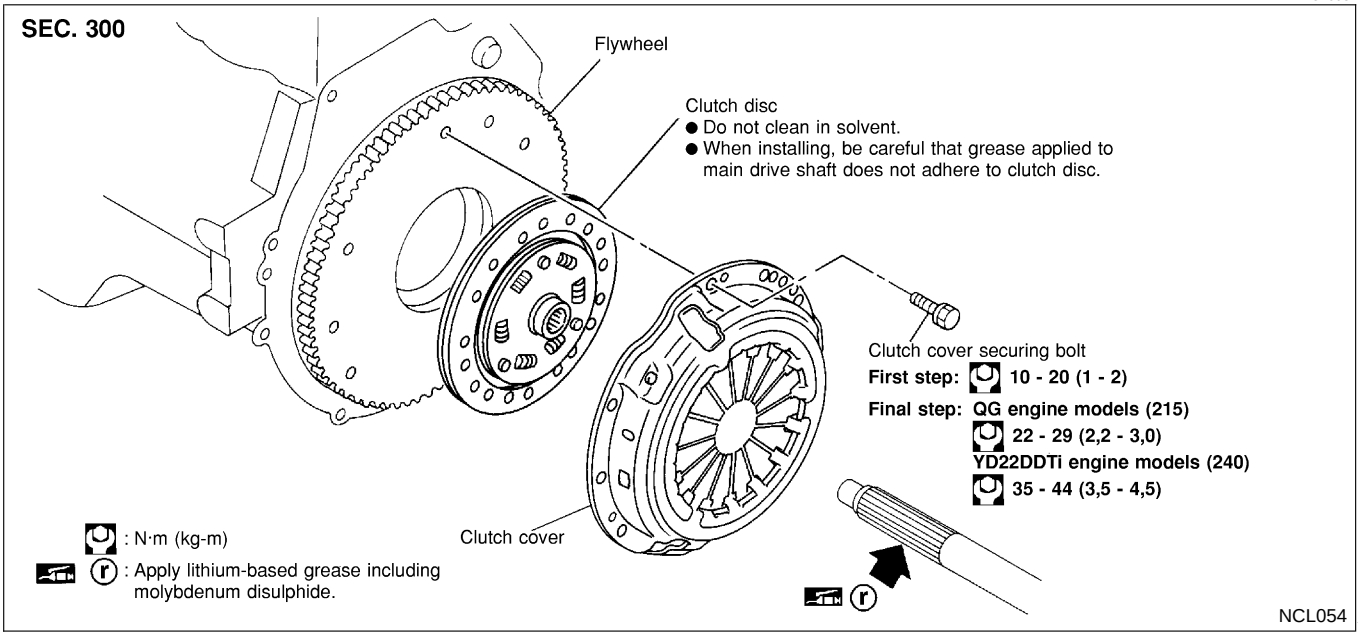

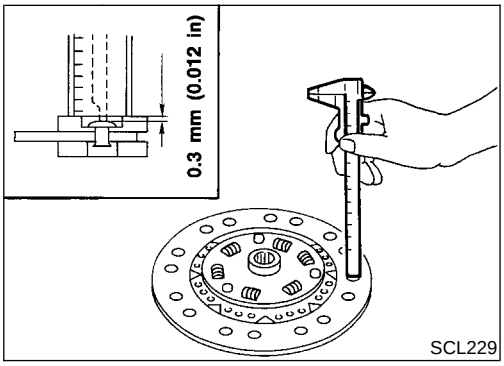

Inspection and Adjustment

NLCL0032

CLUTCH DISC

NLCL0032S01

- Check clutch disc for wear of facing.

Wear limit of facing surface to rivet head:

MODEL 240, MODEL 215 (Part number 30100-2F205)

0.3 mm (0.012 in)

Wearing thickness of facing:

MODEL 240, MODEL 215 (Part number 30100-2F215)

1.3 mm (0.051 in)

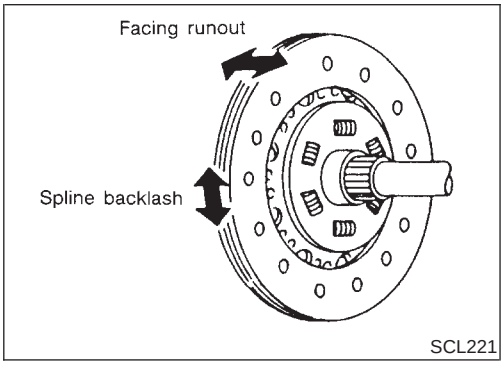

- Check clutch disc for backlash of spline and runout of facing.

Maximum spline backlash (at outer edge of disc):

MODEL 215 0.9 mm (0.035 in)

MODEL 240 1.0 mm (0.039 in)

Runout limit:

1.0 mm (0.039 in)

Distance of runout check point (from hub center):

MODEL 215 102.5 mm (4.04 in)

MODEL 240 115 mm (4.53 in)

- Check clutch disc for burns, discoloration or oil or grease leakage. Replace if necessary.

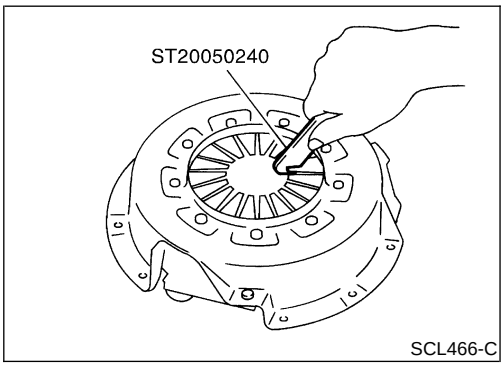

CLUTCH COVER

NLCL0032S02

- Check clutch cover installed on vehicle for unevenness of diaphragm spring toe height.

  Uneven limit:

  MODEL 240 0.7 mm (0.028 in)

  MODEL 215 (Part number 30210-BU000) 0.7 mm (0.028 in)

  MODEL 215 (Part number 30210-BU010) 0.8 mm (0.031 in)
- If out of limit, adjust the height with Tool.

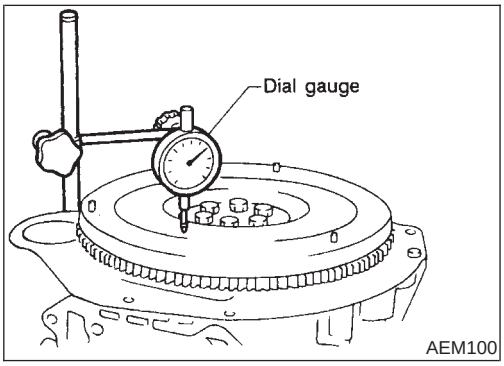

FLYWHEEL

NLCL0032S03

- Check contact surface of flywheel for slight burns or discoloration. Repair flywheel with emery paper.
- Check flywheel runout.

  Maximum allowable runout:

  Refer to EM-95, "Flywheel Runout" (QG engine models), and EM-221, "Flywheel Runout (YD engine models)".

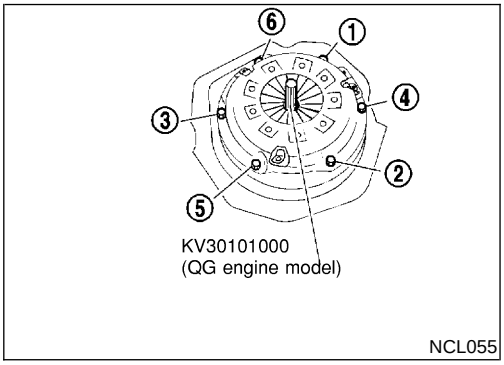

Installation

NLCL0033

- Insert Tool into clutch disc hub when installing clutch cover and disc.
- **Be careful not to allow grease to contaminate clutch facing.**
- Tighten bolts in numerical order.

  First step:

  : 10 - 20 N·m (1 - 2 kg-m, 7 - 14 ft-lb)

  Final step:

  QG engine models (215)

  : 22 - 29 N·m (2.2 - 3.0 kg-m, 15 - 21 ft-lb)

  YD22DDTi engine model (240)

  : 35 - 44 N·m (3.5 - 4.5 kg-m, 26 - 32 ft-lb)

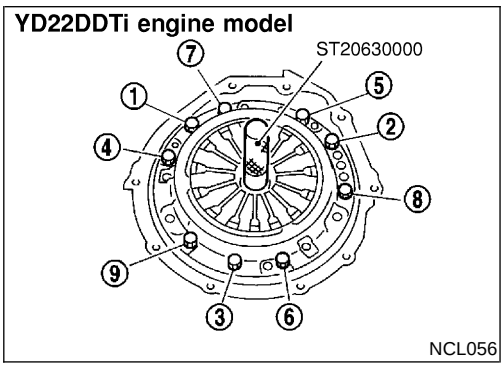

Clutch Control System

NLCL0034

Type of clutch control	Hydraulic

Clutch Master Cylinder

NLCL0035

Unit: mm (in)

Inner diameter	15.87 (5/8)

Clutch Operating Cylinder

NLCL0036

Unit: mm (in)

Inner diameter	19.05 (3/4)

Clutch Disc

NLCL0038

Unit: mm (in)

Engine	QG18DE		YD22DDTi
Model	215		240
	Part number 30100-2F205	Part number 30100-2F215	
Facing size (Outer dia. × inner dia. × thickness)	215 × 140 × 3.5 (8.46 × 5.51 × 0.138)	216 × 153 × 3.45 (8.50 × 6.02 × 0.1358)	240 × 160 × 3.5 (9.45 × 6.30 × 0.138)
Thickness of disc assembly with load	7.6 - 8.0 (0.299 - 0.315) with 4,904 N (500 kg, 1,103 lb)	7.3 - 7.9 (0.2874 - 0.3110) with 4,900 N (499.8 kg, 1102 lb)	7.5 - 8.1 (0.295 - 0.319) with 6,865 N (700.2 kg, 1,543.3 lb)
Wear limit of facing surface to rivet head	0.3 (0.012)	—	0.3 (0.012)
Wearing thickness of facing	—	1.3 (0.051)	1.3 (0.051)
Runout limit of facing	1.0 (0.039)		
Distance of runout check point (from the hub center)	102.5 (4.04)		115 (4.53)
Maximum backlash of spline (at outer edge disc)	0.9 (0.035)		1.0 (0.039)

Clutch Cover

NLCL0039

Unit: mm (in)

Engine	QG18DE		YD22DDTi
Model	215		240
	Part number 30210-BU000	Part number 30210-BU010	
Full-load	4,413 N (450 kg, 992 lb)	4,400 N (448.8 kg, 989.1 lb)	
Uneven limit of diaphragm spring toe height	0.7 (0.028)	0.8 (0.031)	0.7 (0.028)

Clutch Pedal

NLCL0040

Unit: mm (in)

Clutch pedal stroke “S”	155 - 160 (6.10 - 6.30)
Pedal free play “A”	1 - 3 (0.04 - 0.12)