## 1. GS 430 / GS 300 ELECTRICAL WIRING DIAGRAM

(Cont. next page)


Multiplex Communication System (LHD)
Front System
Rear System
Power Source Control Unit
Power Source Control Unit
Power Source Control Unit

Power Source
Multiplex Communication System (MMS)
Fuse Box
Fuse Box
Fuse Box

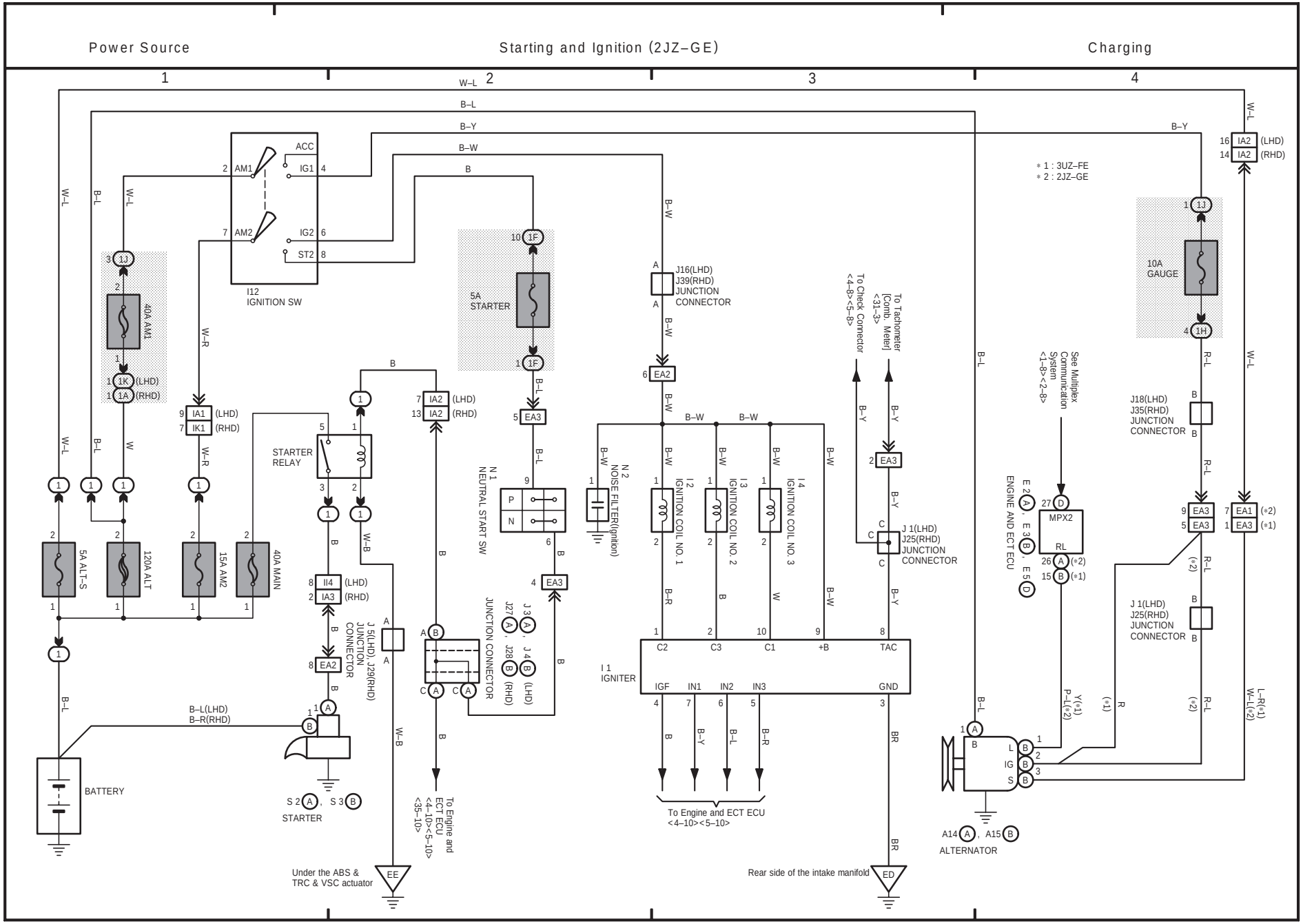
Power Source
Starting and Ignition (2JZ–GE)
Charging
1
2
3
4
W–L
B–L
B–Y
B–W
B
ACC
IG1
IG2
ST2
AM1
AM2
I12
IGNITION SW
40A AM1
1J
1K (LHD)
1A (RHD)
IA1 (LHD)
IK1 (RHD)
W–R
W
5A ALT–S
120A ALT
15A AM2
40A MAIN
STARTER RELAY
IA2 (LHD)
IA2 (RHD)
II4 (LHD)
IA3 (RHD)
EA2
J 5(LHD), J29(RHD) JUNCTION CONNECTOR
B–L(LHD)
B–R(RHD)
BATTERY
S 2 A , S 3 B
STARTER
W–B
Under the ABS & TRC & VSC actuator
EE
5A STARTER
1F
EA3
N 1 NEUTRAL START SW
P
N
J 3 A , J 4 B (LHD)
J27 A , J28 B (RHD)
JUNCTION CONNECTOR
To Engine and ECT ECU <4–10><5–10>
J16(LHD)
J39(RHD)
JUNCTION CONNECTOR
N 2 NOISE FILTER(Ignition)
I 2 IGNITION COIL NO. 1
I 3 IGNITION COIL NO. 2
I 4 IGNITION COIL NO. 3
I 1 IGNITER
C2
C3
C1
+B
TAC
IGF
IN1
IN2
IN3
GND
BR
To Engine and ECT ECU <4–10><5–10>
Rear side of the intake manifold
ED
To Check Connector <4–8><5–8>
To Tachometer [Comb. Meter] <31–3>
J 1(LHD)
J25(RHD)
JUNCTION CONNECTOR
* 1 : 3UZ–FE
* 2 : 2JZ–GE
10A GAUGE
1H
IA2 (LHD)
IA2 (RHD)
See Multiplex Communication System <1–8><2–8>
E 2 A , E 3 B , E 5 D
ENGINE AND ECT ECU
MPX2
RL
J18(LHD)
J35(RHD)
JUNCTION CONNECTOR
EA1 (*2)
EA3 (*1)
Y(*1)
P–L(*2)
R
L–R(*1)
W–L(*2)
L
IG
S
A14 A , A15 B
ALTERNATOR

4 GS 430 / GS 300

(Cont. next page)

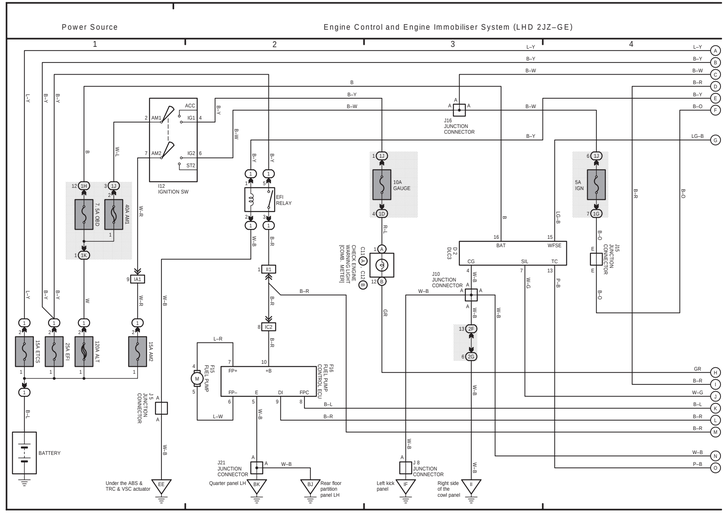




4 GS 430 / GS 300 (Cont' d)

(Cont. next page)

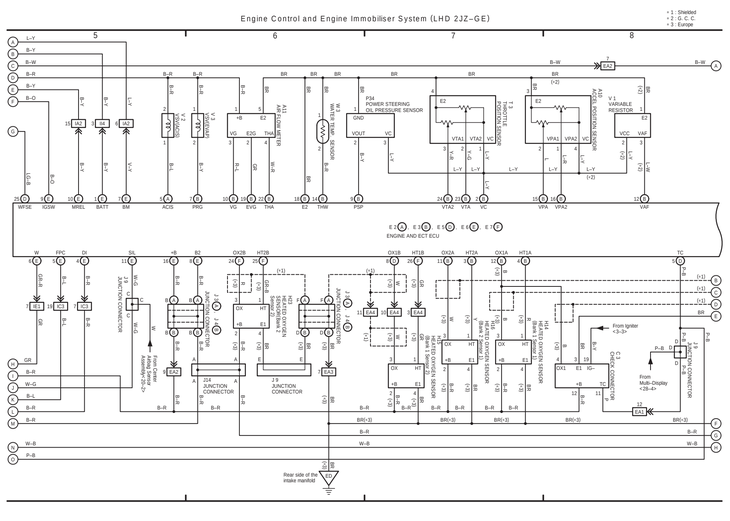




4 GS 430 / GS 300 (Cont' d)

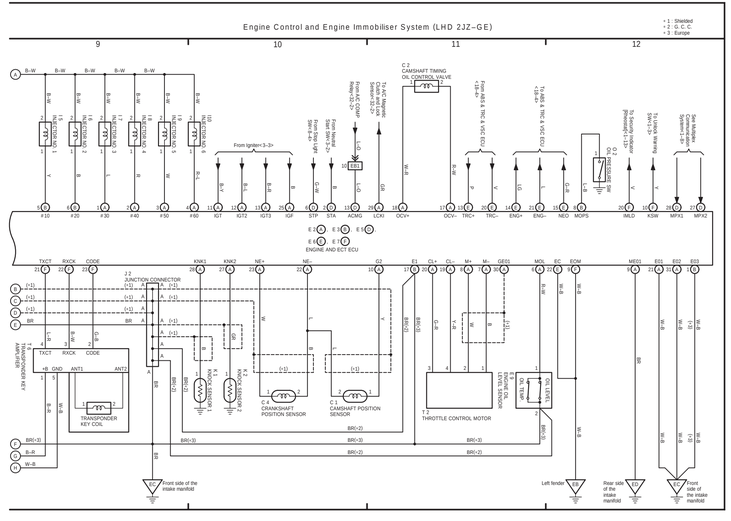

(Cont. next page)

Power Source

Engine Control and Engine Immobiliser System (RHD 2JZ–GE)

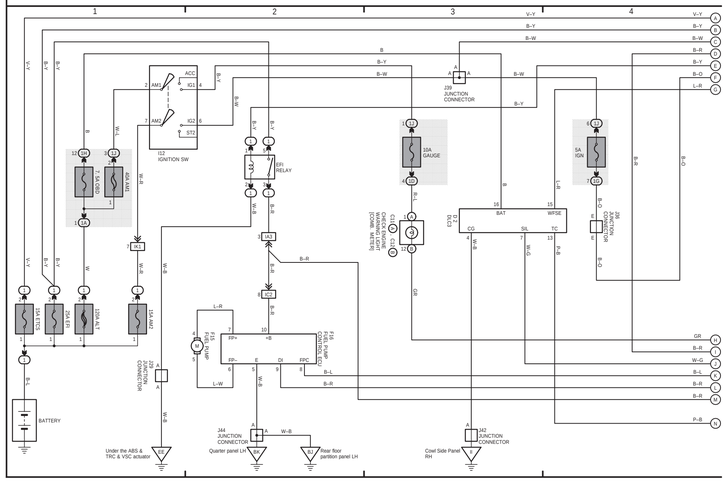










(Cont. next page)

Engine Control and Engine Immobiliser System (RHD 2JZ–GE)

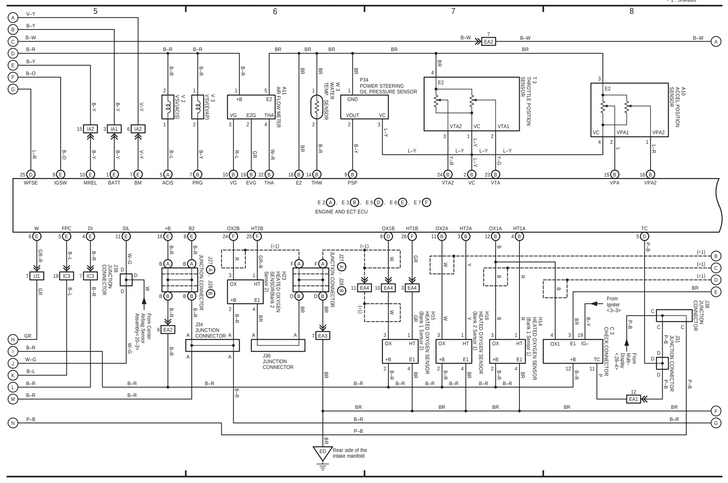






Engine Control and Engine Immobiliser System (RHD 2JZ–GE)

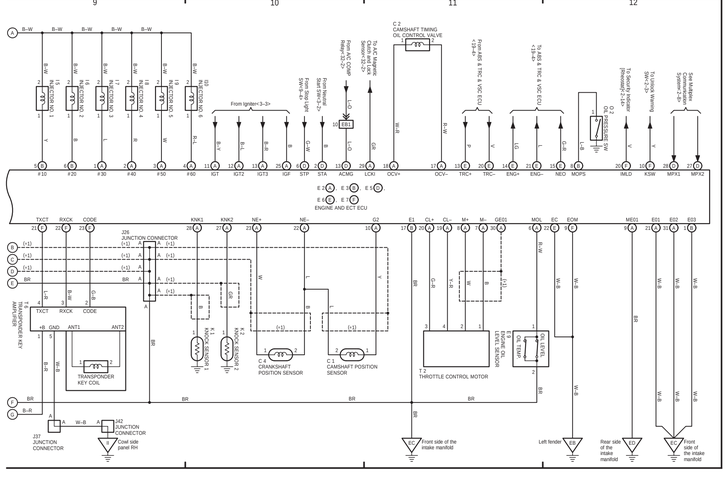

# I OVERALL ELECTRICAL WIRING DIAGRAM

## 6 GS 430 / GS 300

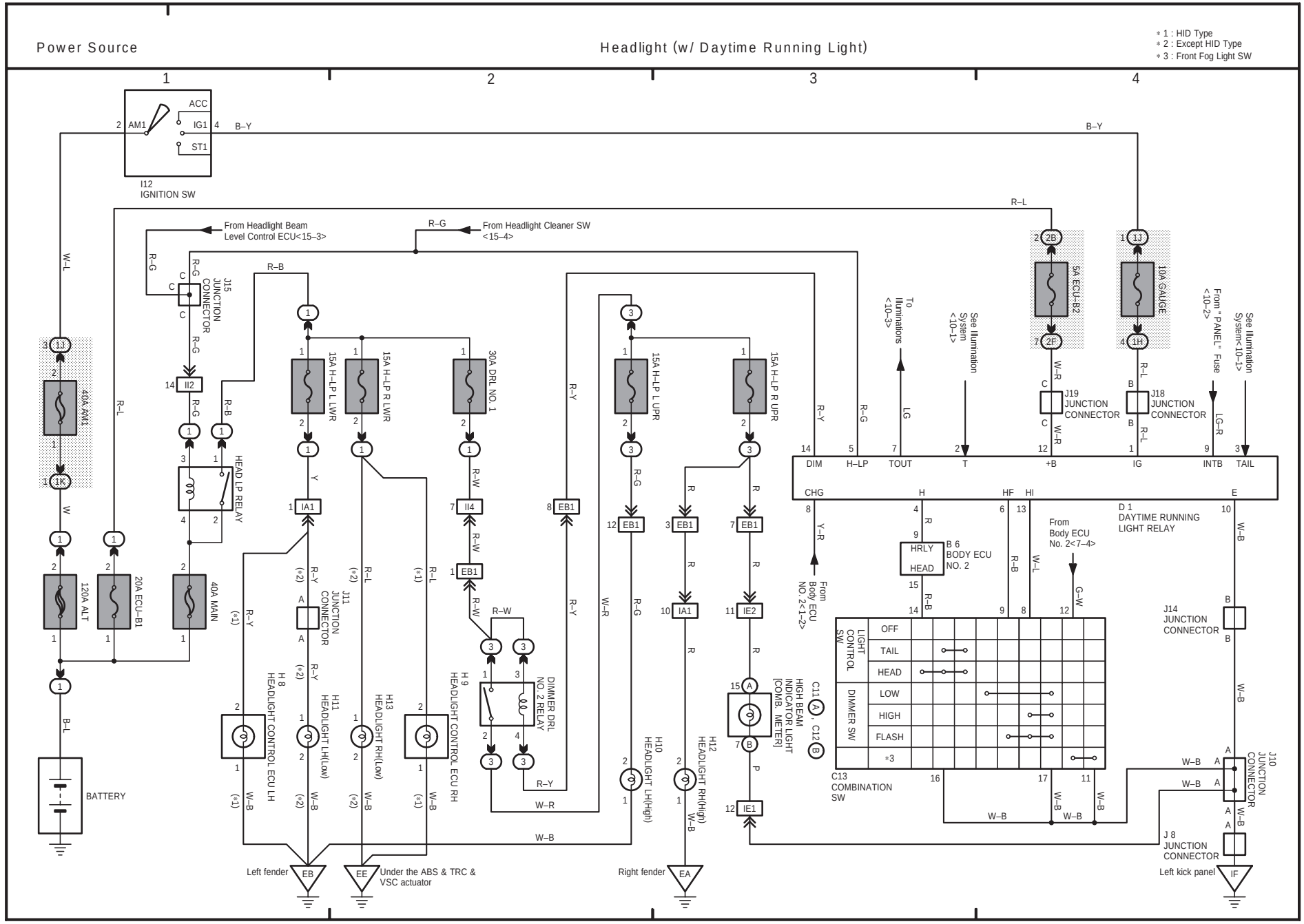

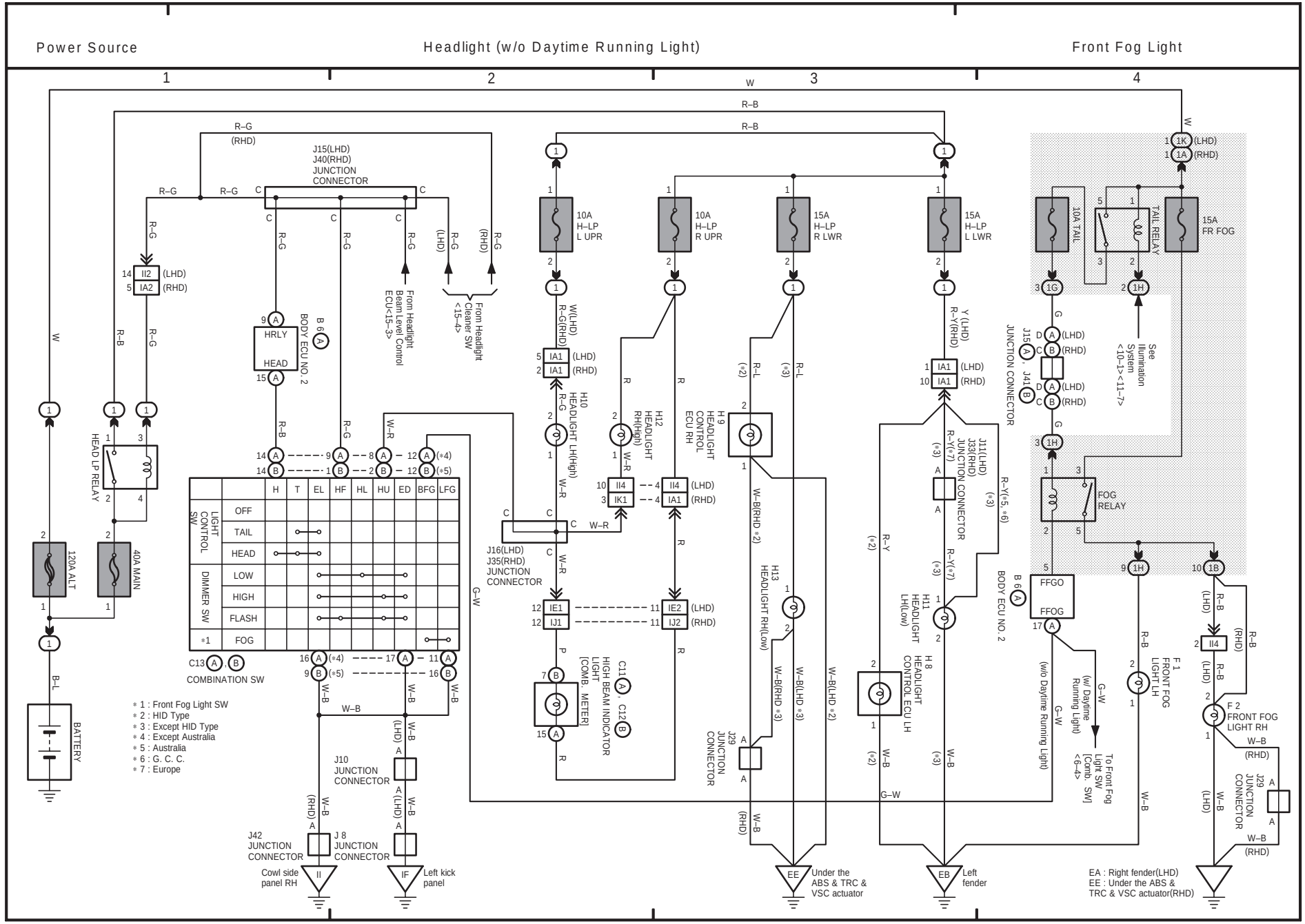
Power Source
Headlight (w/o Daytime Running Light)
Front Fog Light
1
2
3
4
J15(LHD)
J40(RHD)
JUNCTION
CONNECTOR
10A
H–LP
L UPR
10A
H–LP
R UPR
15A
H–LP
R LWR
15A
H–LP
L LWR
10A TAIL
TAIL RELAY
15A
FR FOG
FOG
RELAY
FFGO
FFOG
BODY ECU NO. 2
HRLY
HEAD
HEAD LP RELAY
120A ALT
40A MAIN
BATTERY
LIGHT CONTROL SW
DIMMER SW
OFF
TAIL
HEAD
LOW
HIGH
FLASH
FOG
H
T
EL
HF
HL
HU
ED
BFG
LFG
COMBINATION SW
From Headlight Beam Level Control ECU<15–3>
From Headlight Cleaner SW <15–4>
See Illumination System <10–1><11–7>
H10 HEADLIGHT LH(High)
H12 HEADLIGHT RH(High)
H9 HEADLIGHT CONTROL ECU RH
H13 HEADLIGHT RH(Low)
H11 HEADLIGHT LH(Low)
H8 HEADLIGHT CONTROL ECU LH
J111(LHD)
J33(RHD)
JUNCTION CONNECTOR
J16(LHD)
J35(RHD)
JUNCTION CONNECTOR
C11, C12
HIGH BEAM INDICATOR LIGHT [COMB. METER]
129 JUNCTION CONNECTOR
J10 JUNCTION CONNECTOR
J42 JUNCTION CONNECTOR
J 8 JUNCTION CONNECTOR
Cowl side panel RH
Left kick panel
Under the ABS & TRC & VSC actuator
Left fender
F 1 FRONT FOG LIGHT LH
F 2 FRONT FOG LIGHT RH
To Front Fog Light SW [Comb. SW] <6–4>
(w/ Daytime Running Light)
(w/o Daytime Running Light)
EA : Right fender(LHD)
EE : Under the ABS & TRC & VSC actuator(RHD)
* 1 : Front Fog Light SW
* 2 : HID Type
* 3 : Except HID Type
* 4 : Except Australia
* 5 : Australia
* 6 : G. C. C.
* 7 : Europe

## 8 GS 430 / GS 300

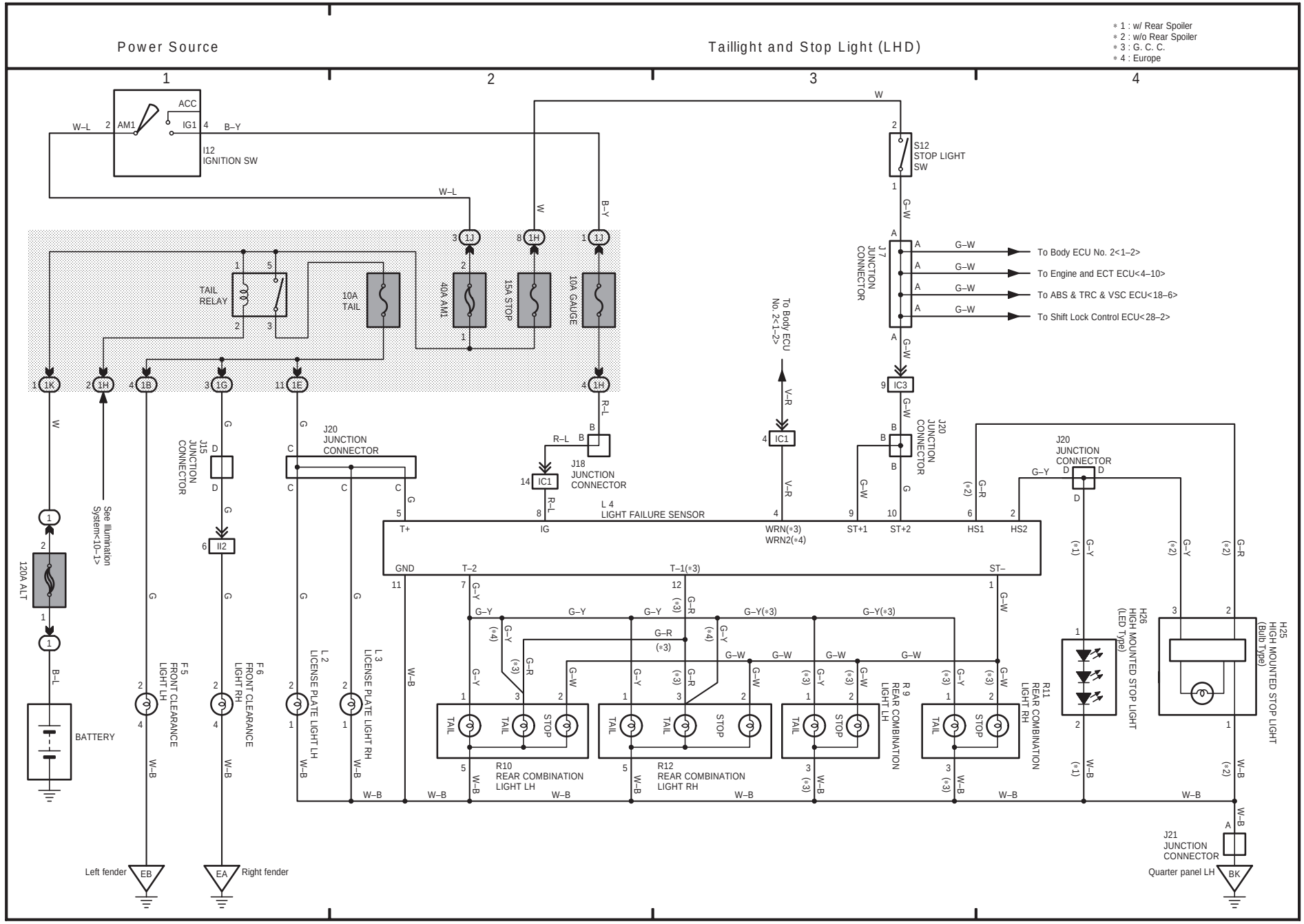

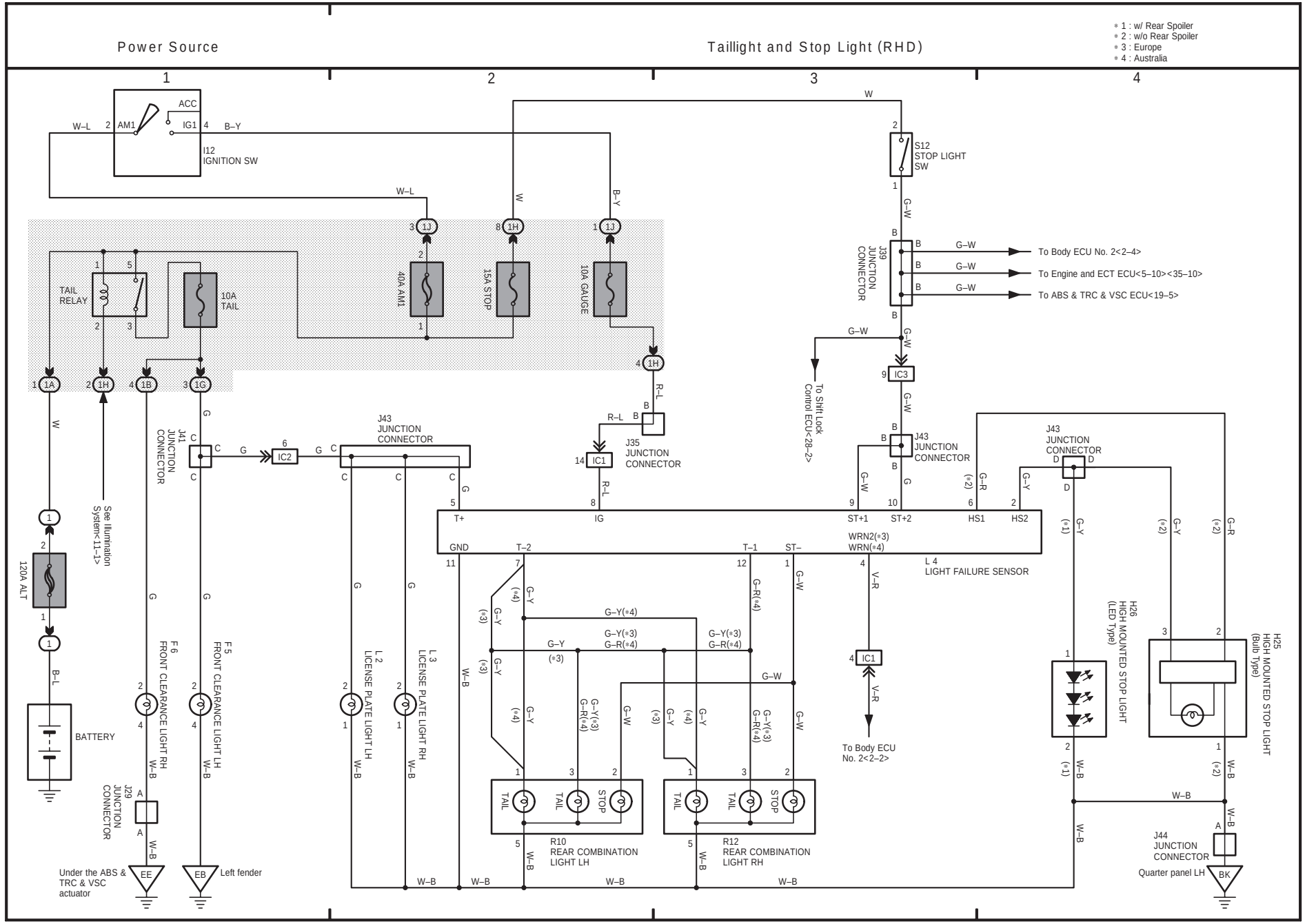
Power Source
Taillight and Stop Light (RHD)
* 1 : w/ Rear Spoiler
* 2 : w/o Rear Spoiler
* 3 : Europe
* 4 : Australia
I12 IGNITION SW
ACC
AM1
IG1
S12 STOP LIGHT SW
J39 JUNCTION CONNECTOR
To Body ECU No. 2<2–4>
To Engine and ECT ECU<5–10><35–10>
To ABS & TRC & VSC ECU<19–5>
To Shift Lock Control ECU<28–2>
TAIL RELAY
10A TAIL
40A AM1
15A STOP
10A GAUGE
J35 JUNCTION CONNECTOR
J43 JUNCTION CONNECTOR
J41 JUNCTION CONNECTOR
See Illumination System<11–1>
120A ALT
BATTERY
F6 FRONT CLEARANCE LIGHT RH
F5 FRONT CLEARANCE LIGHT LH
L2 LICENSE PLATE LIGHT LH
L3 LICENSE PLATE LIGHT RH
J29 JUNCTION CONNECTOR
Under the ABS & TRC & VSC actuator
Left fender
T+
IG
ST+1
ST+2
HS1
HS2
GND
T–2
T–1
ST–
WRN2(*3)
WRN(*4)
L4 LIGHT FAILURE SENSOR
To Body ECU No. 2<2–2>
R10 REAR COMBINATION LIGHT LH
R12 REAR COMBINATION LIGHT RH
H26 HIGH MOUNTED STOP LIGHT (LED Type)
H25 HIGH MOUNTED STOP LIGHT (Bulb Type)
J44 JUNCTION CONNECTOR
Quarter panel LH

# I OVERALL ELECTRICAL WIRING DIAGRAM

## 10 GS 430 / GS 300

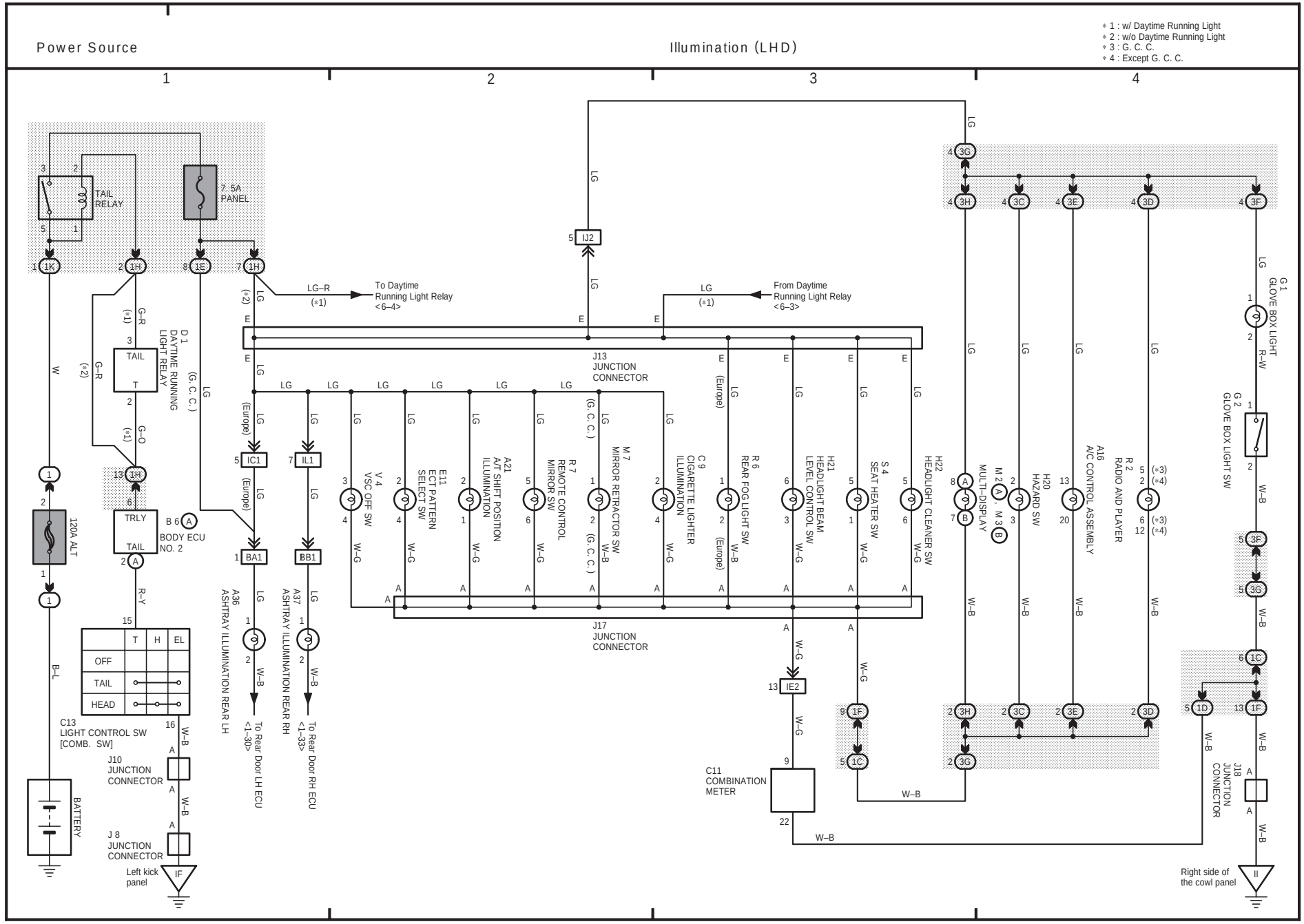

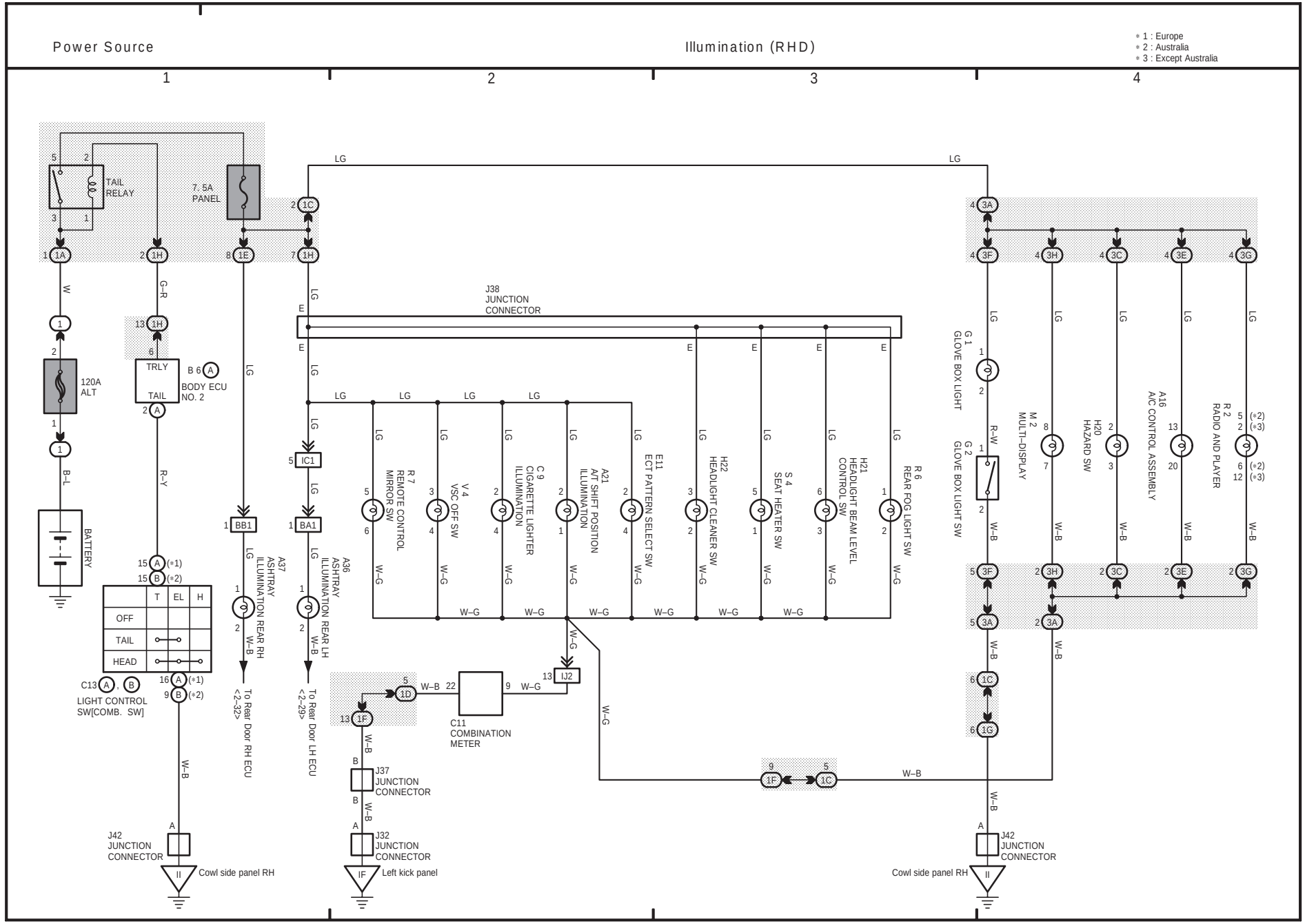
Power Source
Illumination (RHD)
* 1 : Europe
* 2 : Australia
* 3 : Except Australia
1
2
3
4
TAIL RELAY
7. 5A PANEL
120A ALT
BATTERY
TRLY
TAIL
B 6 A
BODY ECU NO. 2
J38 JUNCTION CONNECTOR
R 7 REMOTE CONTROL MIRROR SW
V 4 VSC OFF SW
C 9 CIGARETTE LIGHTER ILLUMINATION
A21 A/T SHIFT POSITION ILLUMINATION
E11 ECT PATTERN SELECT SW
H22 HEADLIGHT CLEANER SW
S 4 SEAT HEATER SW
H21 HEADLIGHT BEAM LEVEL CONTROL SW
R 6 REAR FOG LIGHT SW
G 1 GLOVE BOX LIGHT
G 2 GLOVE BOX LIGHT SW
M 2 MULTI-DISPLAY
H20 HAZARD SW
A16 A/C CONTROL ASSEMBLY
R 2 RADIO AND PLAYER
A37 ASHTRAY ILLUMINATION REAR RH
A36 ASHTRAY ILLUMINATION REAR LH
To Rear Door RH ECU <2-32>
To Rear Door LH ECU <2-29>
OFF
TAIL
HEAD
T
EL
H
LIGHT CONTROL SW[COMB. SW]
C11 COMBINATION METER
J37 JUNCTION CONNECTOR
J32 JUNCTION CONNECTOR
J42 JUNCTION CONNECTOR
Cowl side panel RH
Left kick panel

## 12 GS 430 / GS 300

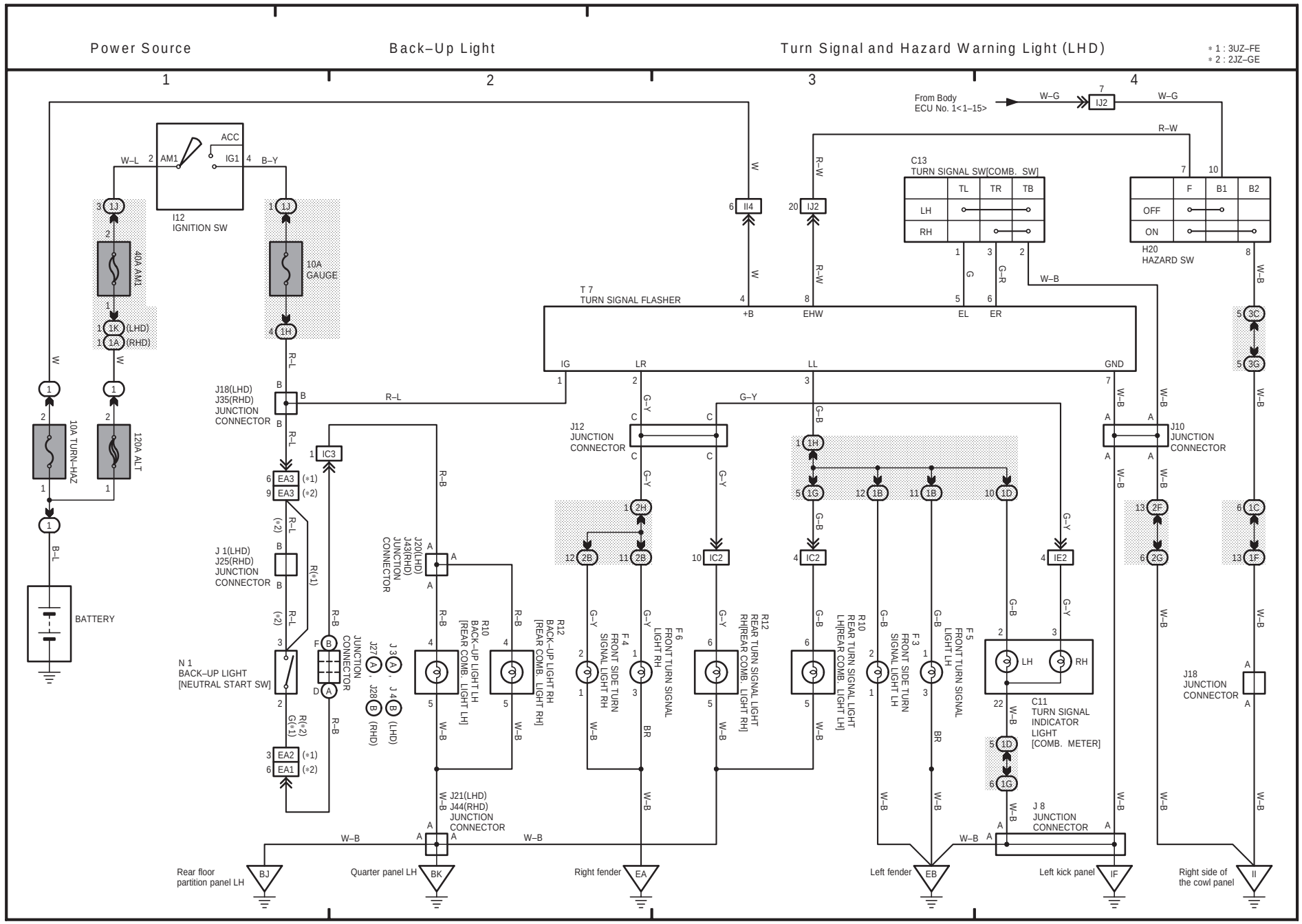

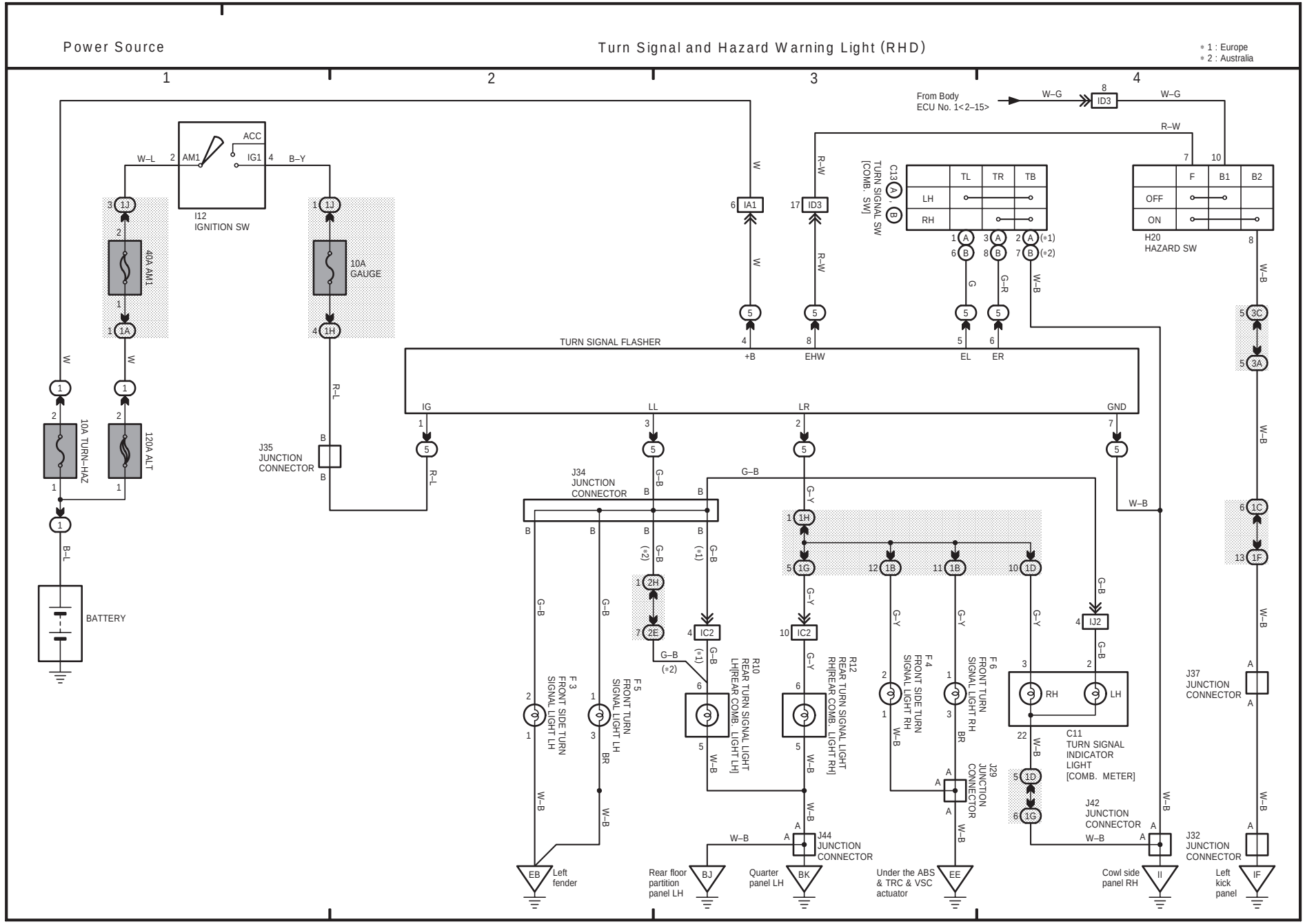
Power Source
Turn Signal and Hazard Warning Light (RHD)
* 1 : Europe
* 2 : Australia
1
2
3
4
From Body ECU No. 1<2–15>
W–G
ID3
R–W
ACC
AM1
IG1
W–L
B–Y
I12 IGNITION SW
40A AM1
10A GAUGE
IA1
C13 TURN SIGNAL SW [COMB. SW]
TL
TR
TB
LH
RH
H20 HAZARD SW
F
B1
B2
OFF
ON
TURN SIGNAL FLASHER
+B
EHW
EL
ER
IG
LL
LR
GND
10A TURN–HAZ
120A ALT
J35 JUNCTION CONNECTOR
J34 JUNCTION CONNECTOR
BATTERY
IC2
IJ2
F 3 FRONT SIDE TURN SIGNAL LIGHT LH
F 5 FRONT TURN SIGNAL LIGHT LH
R10 REAR TURN SIGNAL LIGHT LH[REAR COMB. LIGHT LH]
R12 REAR TURN SIGNAL LIGHT RH[REAR COMB. LIGHT RH]
F 4 FRONT SIDE TURN SIGNAL LIGHT RH
F 6 FRONT TURN SIGNAL LIGHT RH
C11 TURN SIGNAL INDICATOR LIGHT [COMB. METER]
J29 JUNCTION CONNECTOR
J42 JUNCTION CONNECTOR
J44 JUNCTION CONNECTOR
J37 JUNCTION CONNECTOR
J32 JUNCTION CONNECTOR
EB Left fender
Rear floor partition panel LH
BJ
Quarter panel LH
BK
Under the ABS & TRC & VSC actuator
EE
Cowl side panel RH
II
Left kick panel
IF

# I OVERALL ELECTRICAL WIRING DIAGRAM

## 14 GS 430 / GS 300

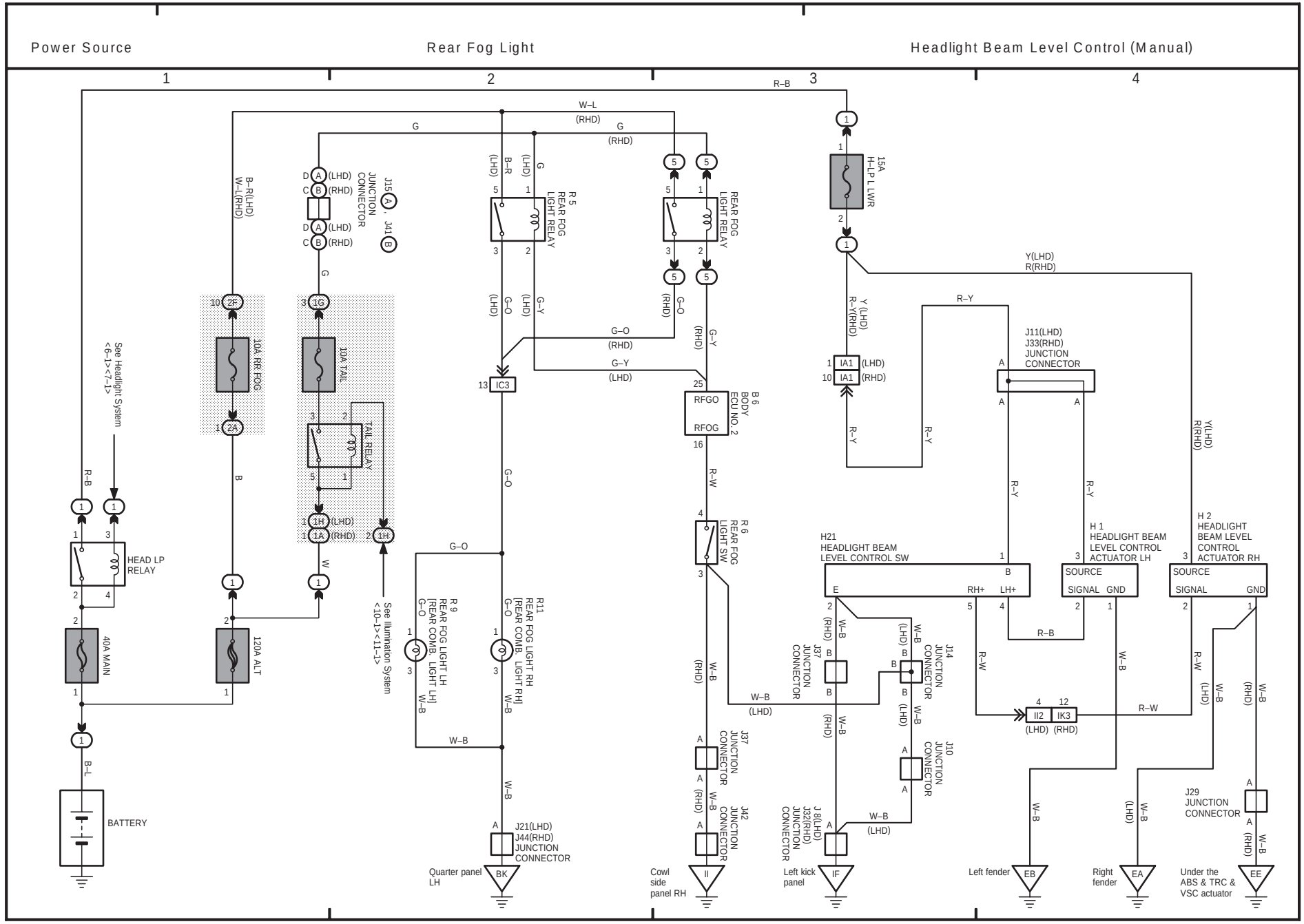

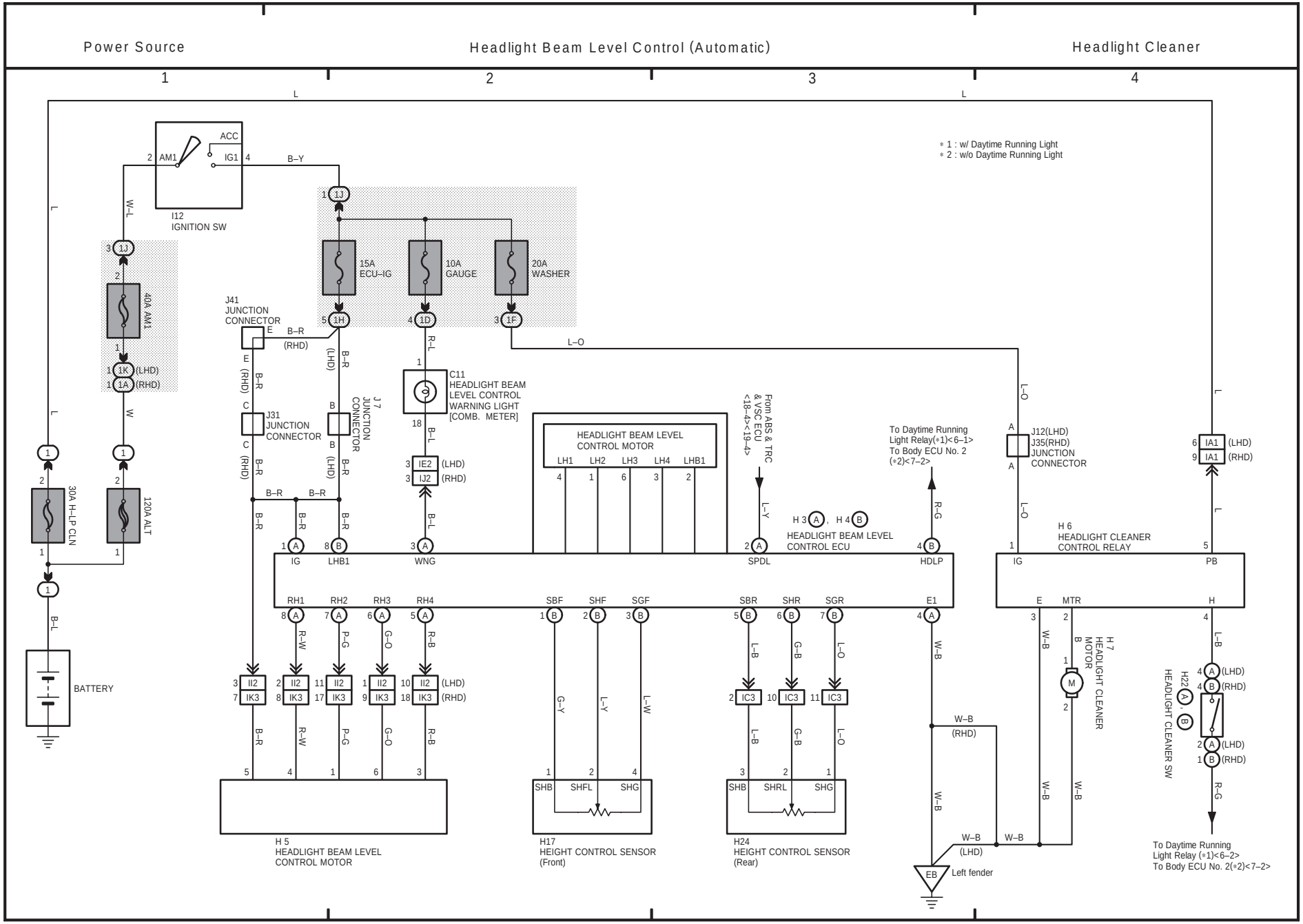
Power Source
Headlight Beam Level Control (Automatic)
Headlight Cleaner
1
2
3
4
* 1 : w/ Daytime Running Light
* 2 : w/o Daytime Running Light
ACC
AM1
IG1
I12
IGNITION SW
40A AM1
30A H–LP CLN
120A ALT
BATTERY
15A ECU–IG
10A GAUGE
20A WASHER
J41 JUNCTION CONNECTOR
J31 JUNCTION CONNECTOR
J7 JUNCTION CONNECTOR
C11 HEADLIGHT BEAM LEVEL CONTROL WARNING LIGHT [COMB. METER]
HEADLIGHT BEAM LEVEL CONTROL MOTOR
From ABS & TRC & VSC ECU <18–4><19–4>
To Daytime Running Light Relay(*1)<6–1> To Body ECU No. 2 (*2)<7–2>
J12(LHD) J35(RHD) JUNCTION CONNECTOR
H 3 A, H 4 B
HEADLIGHT BEAM LEVEL CONTROL ECU
H 6 HEADLIGHT CLEANER CONTROL RELAY
H 7 HEADLIGHT CLEANER MOTOR
H22 A, B
HEADLIGHT CLEANER SW
H 5 HEADLIGHT BEAM LEVEL CONTROL MOTOR
H17 HEIGHT CONTROL SENSOR (Front)
H24 HEIGHT CONTROL SENSOR (Rear)
EB
Left fender
To Daytime Running Light Relay (*1)<6–2> To Body ECU No. 2(*2)<7–2>

16 GS 430 / GS 300

(Cont. next page)

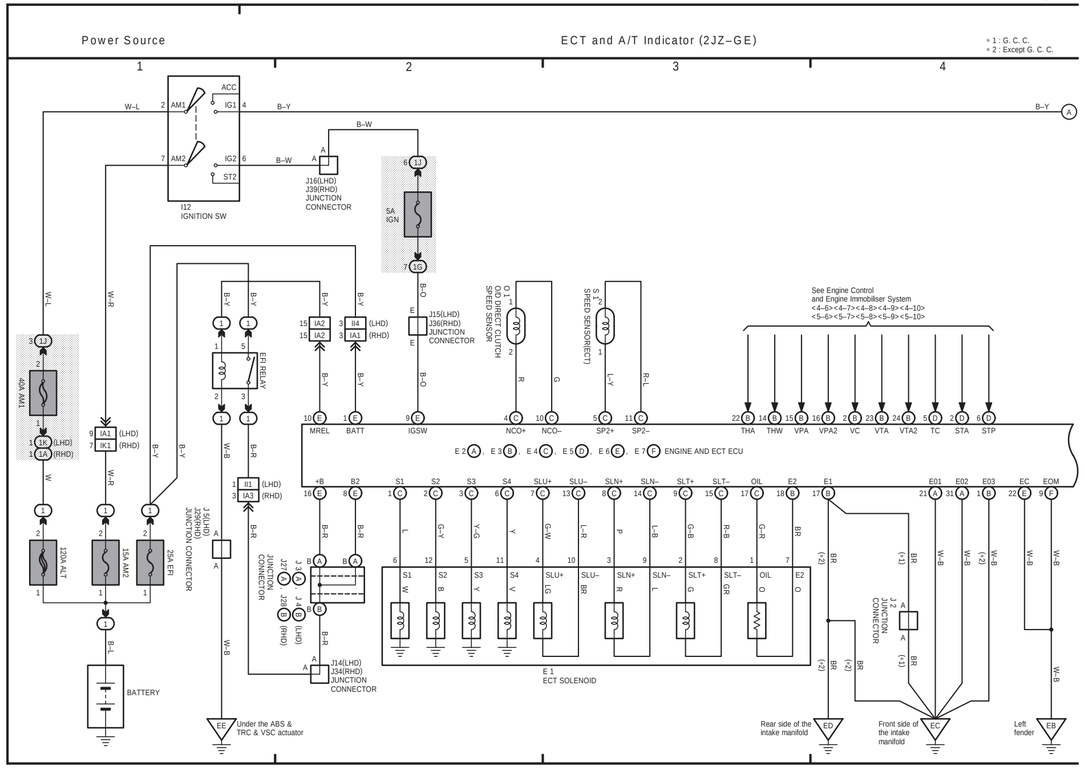




16 GS 430 / GS 300 (Cont' d)

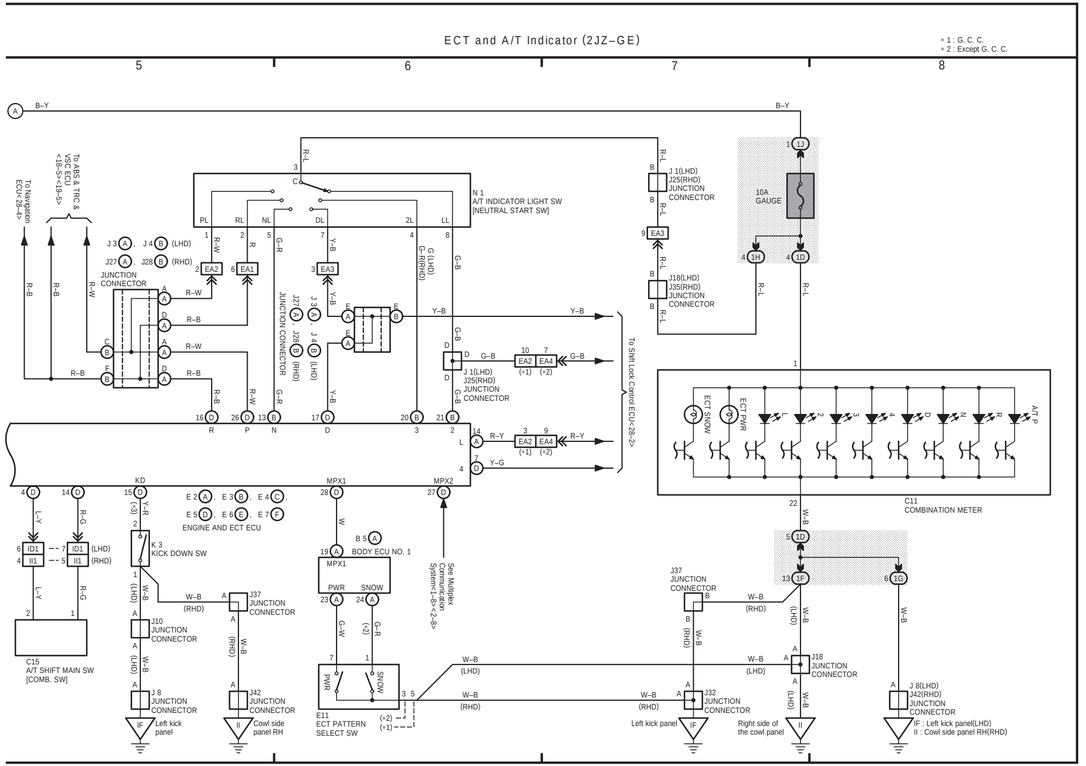

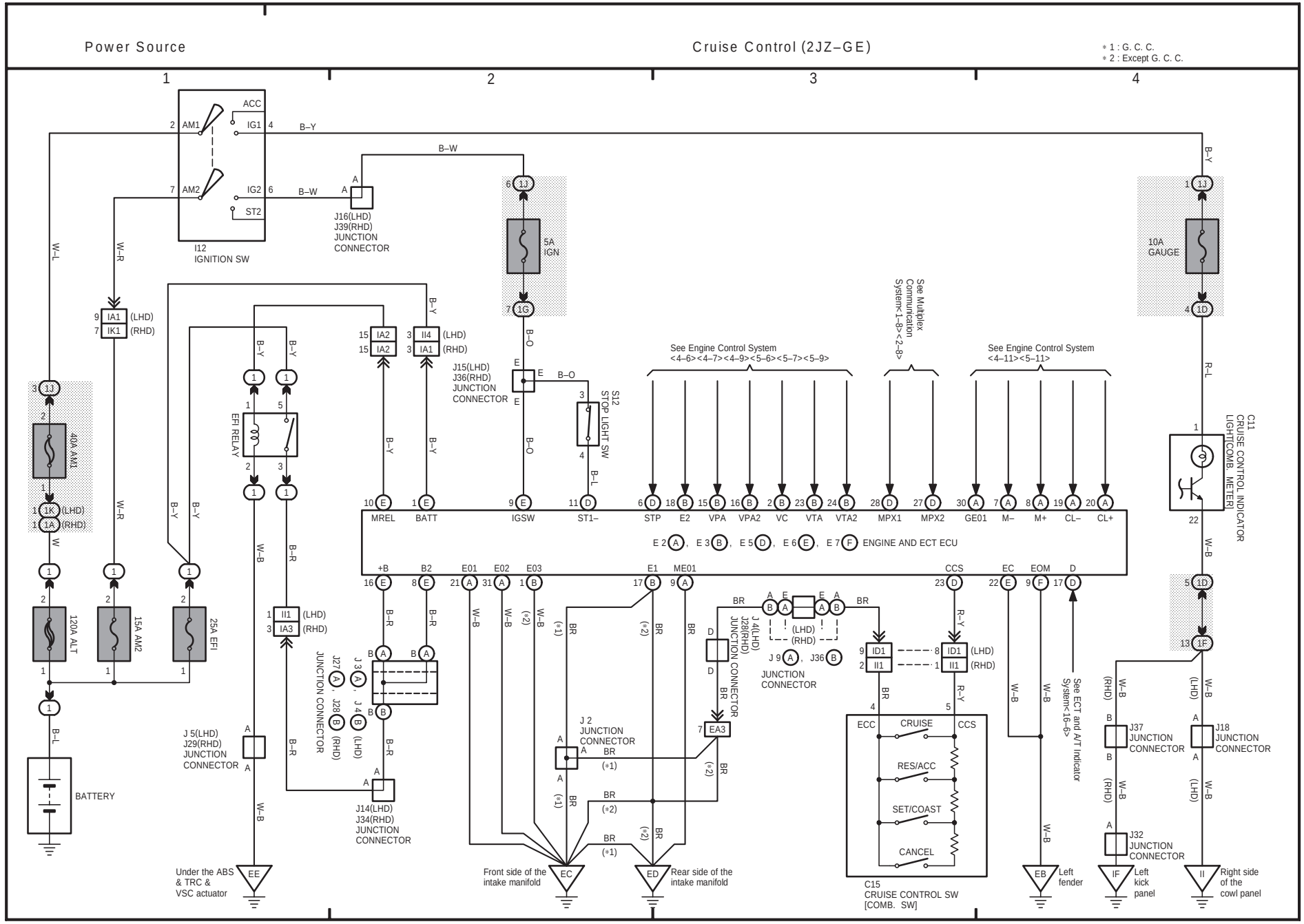
Power Source
Cruise Control (2JZ–GE)
∗1 : G. C. C.
∗2 : Except G. C. C.
1
2
3
4
ACC
IG1
IG2
ST2
AM1
AM2
I12
IGNITION SW
J16(LHD)
J39(RHD)
JUNCTION
CONNECTOR
5A
IGN
10A
GAUGE
40A AM1
120A ALT
15A AM2
25A EFI
BATTERY
EFI RELAY
J15(LHD)
J36(RHD)
JUNCTION
CONNECTOR
S12
STOP LIGHT SW
See Engine Control System
<4–6><4–7><4–9><5–6><5–7><5–9>
See Multiplex
Communication
System<1–8><2–8>
See Engine Control System
<4–11><5–11>
C11
CRUISE CONTROL INDICATOR
LIGHT(COMB. METER)
MREL
BATT
IGSW
ST1–
STP
E2
VPA
VPA2
VC
VTA
VTA2
MPX1
MPX2
GE01
M–
M+
CL–
CL+
E 2 A, E 3 B, E 5 D, E 6 E, E 7 F ENGINE AND ECT ECU
+B
B2
E01
E02
E03
E1
ME01
CCS
EC
EOM
D
J 5(LHD)
J29(RHD)
JUNCTION
CONNECTOR
J14(LHD)
J34(RHD)
JUNCTION
CONNECTOR
J27 A, J28 B (RHD)
J 3 A, J 4 B (LHD)
JUNCTION CONNECTOR
J 2
JUNCTION
CONNECTOR
J 4(LHD)
J28(RHD)
JUNCTION CONNECTOR
J 9 A, J36 B
JUNCTION
CONNECTOR
(LHD)
(RHD)
ECC
CRUISE
CCS
RES/ACC
SET/COAST
CANCEL
C15
CRUISE CONTROL SW
[COMB. SW]
See ECT and A/T Indicator
System<16–6>
J37
JUNCTION
CONNECTOR
J32
JUNCTION
CONNECTOR
J18
JUNCTION
CONNECTOR
Under the ABS
& TRC &
VSC actuator
Front side of the
intake manifold
Rear side of the
intake manifold
Left
fender
Left
kick
panel
Right side
of the
cowl panel

18 GS 430 / GS 300

(Cont. next page)

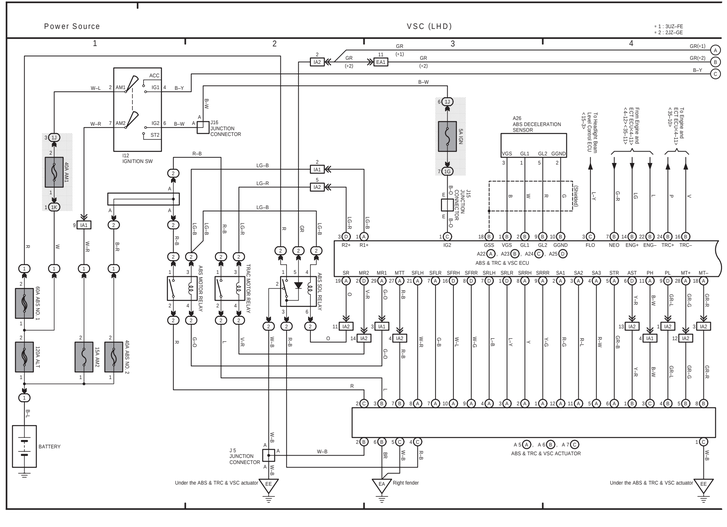






18 GS 430 / GS 300 (Cont' d)

(Cont. next page)

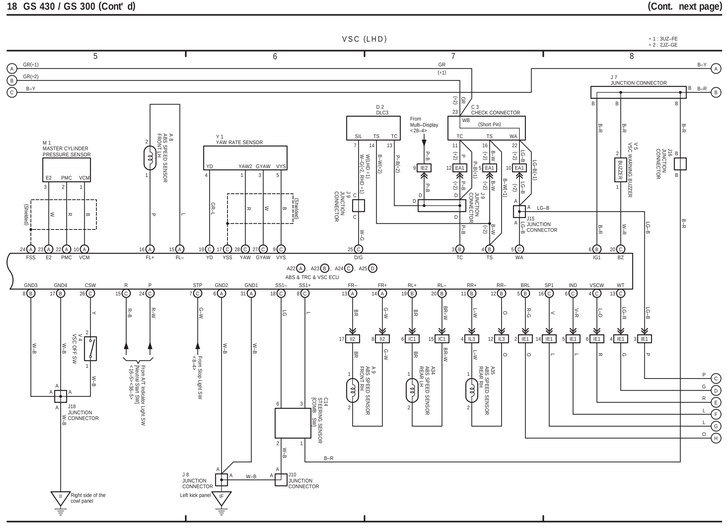




18 GS 430 / GS 300 (Cont' d)

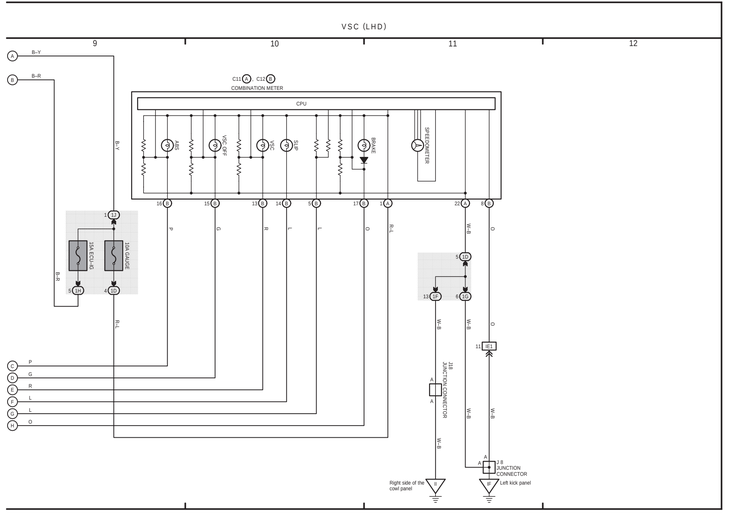

(Cont. next page)

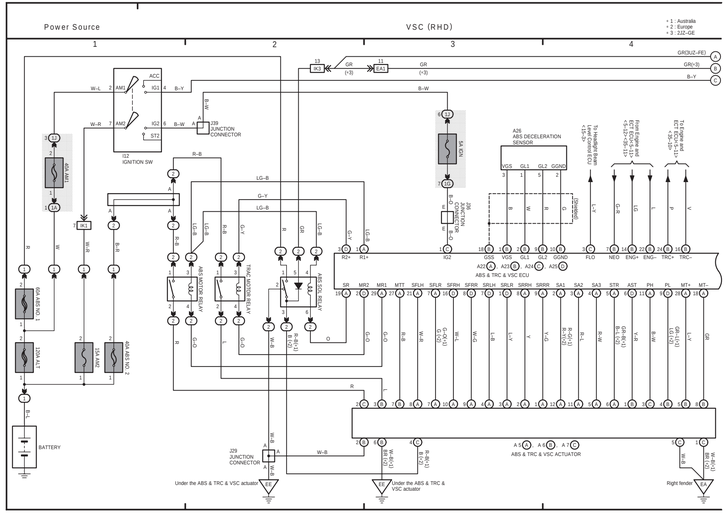






(Cont. next page)

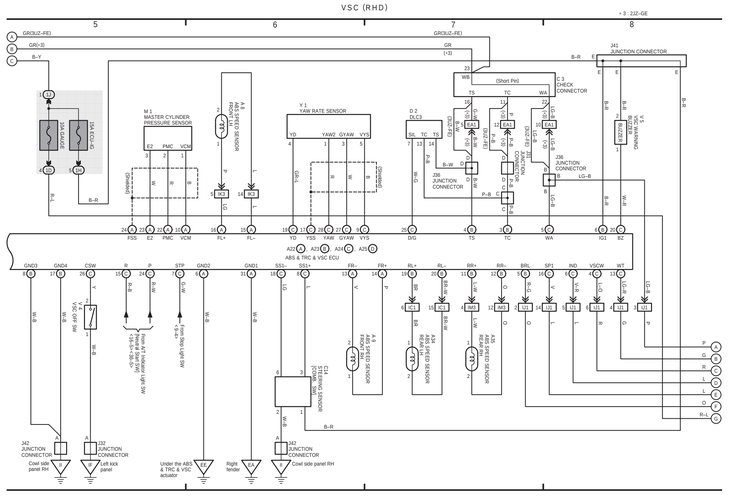






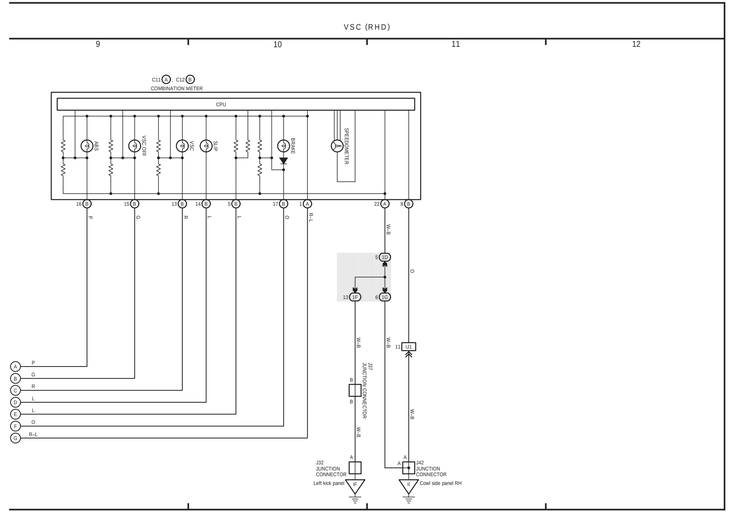

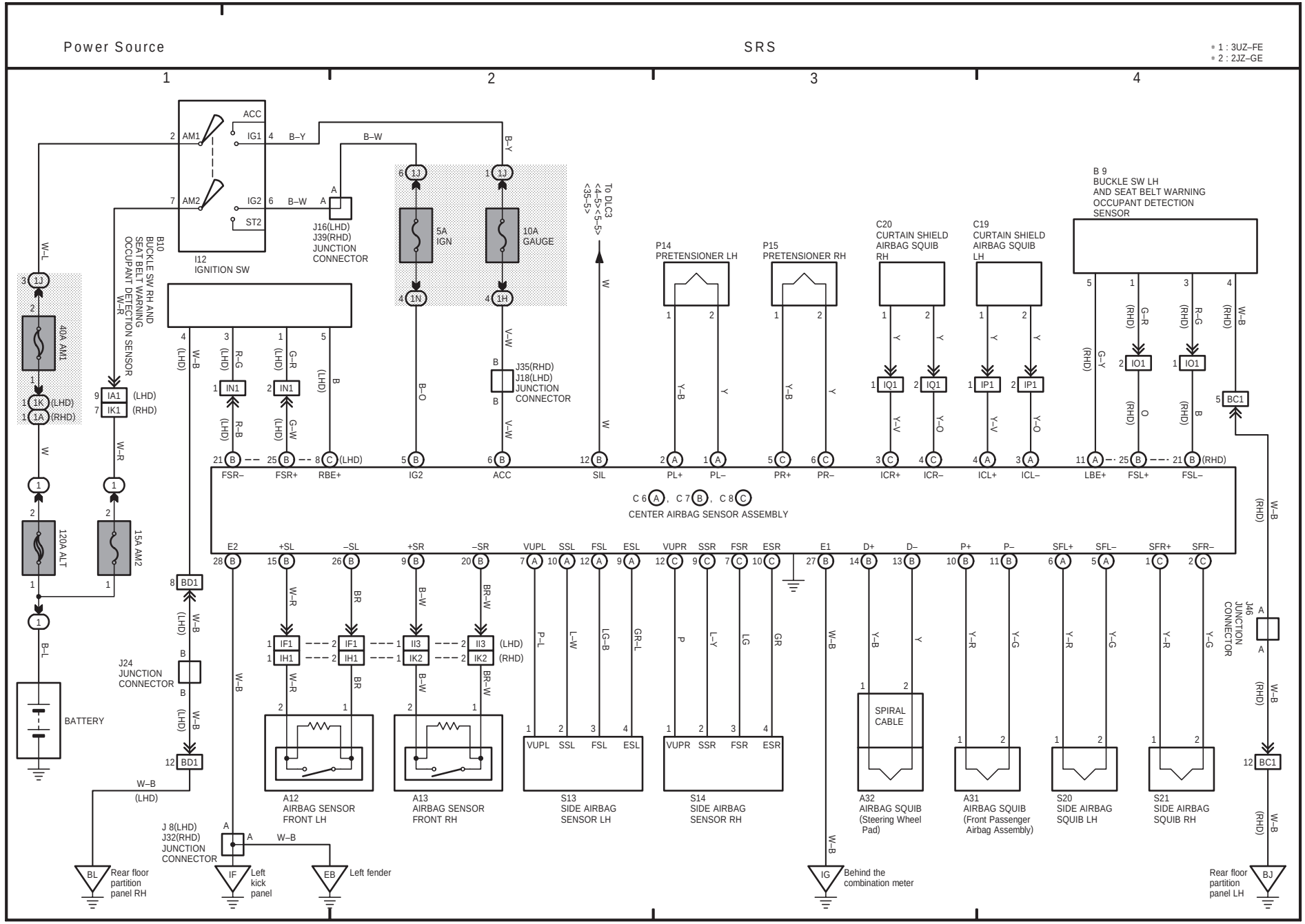
Power Source
SRS
* 1 : 3UZ–FE
* 2 : 2JZ–GE
1
2
3
4
I12
IGNITION SW
ACC
IG1
IG2
ST2
AM1
AM2
J16(LHD)
J39(RHD)
JUNCTION
CONNECTOR
5A
IGN
10A
GAUGE
To DLC3
<4–5><5–5>
<35–5>
40A AM1
120A ALT
15A AM2
BATTERY
B10
BUCKLE SW RH AND
SEAT BELT WARNING
OCCUPANT DETECTION SENSOR
J35(RHD)
J18(LHD)
JUNCTION
CONNECTOR
P14
PRETENSIONER LH
P15
PRETENSIONER RH
C20
CURTAIN SHIELD
AIRBAG SQUIB
RH
C19
CURTAIN SHIELD
AIRBAG SQUIB
LH
B 9
BUCKLE SW LH
AND SEAT BELT WARNING
OCCUPANT DETECTION
SENSOR
FSR–
FSR+
RBE+
IG2
ACC
SIL
PL+
PL–
PR+
PR–
ICR+
ICR–
ICL+
ICL–
LBE+
FSL+
FSL–
C 6 A, C 7 B, C 8 C
CENTER AIRBAG SENSOR ASSEMBLY
E2
+SL
–SL
+SR
–SR
VUPL
SSL
FSL
ESL
VUPR
SSR
FSR
ESR
E1
D+
D–
P+
P–
SFL+
SFL–
SFR+
SFR–
J24
JUNCTION
CONNECTOR
J 8(LHD)
J32(RHD)
JUNCTION
CONNECTOR
J46
JUNCTION
CONNECTOR
A12
AIRBAG SENSOR
FRONT LH
A13
AIRBAG SENSOR
FRONT RH
S13
SIDE AIRBAG
SENSOR LH
S14
SIDE AIRBAG
SENSOR RH
A32
AIRBAG SQUIB
(Steering Wheel
Pad)
SPIRAL
CABLE
A31
AIRBAG SQUIB
(Front Passenger
Airbag Assembly)
S20
SIDE AIRBAG
SQUIB LH
S21
SIDE AIRBAG
SQUIB RH
BL
Rear floor
partition
panel RH
IF
Left
kick
panel
EB
Left fender
IG
Behind the
combination meter
BJ
Rear floor
partition
panel LH

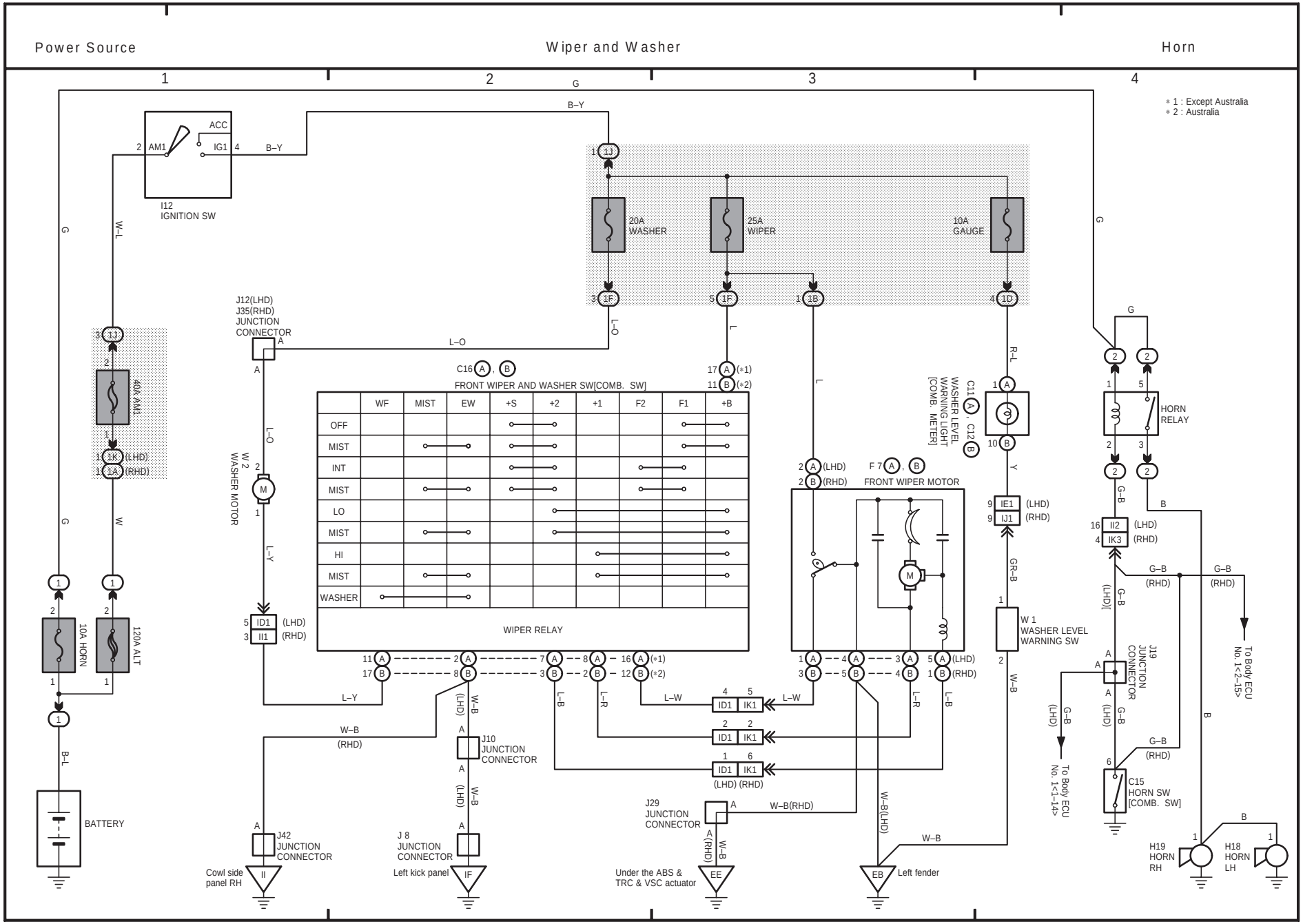
Power Source
Wiper and Washer
Horn
1
2
3
4
* 1 : Except Australia
* 2 : Australia
I12
IGNITION SW
ACC
AM1
IG1
20A
WASHER
25A
WIPER
10A
GAUGE
40A AM1
10A HORN
120A ALT
BATTERY
J12(LHD)
J35(RHD)
JUNCTION
CONNECTOR
W 2
WASHER MOTOR
C16
FRONT WIPER AND WASHER SW[COMB. SW]
WF
MIST
EW
+S
+2
+1
F2
F1
+B
OFF
INT
LO
HI
WASHER
WIPER RELAY
C111
WASHER LEVEL
WARNING LIGHT
[COMB. METER]
C12
F 7
FRONT WIPER MOTOR
W 1
WASHER LEVEL
WARNING SW
HORN
RELAY
J19
JUNCTION
CONNECTOR
C15
HORN SW
[COMB. SW]
To Body ECU
No. 1<2-15>
To Body ECU
No. 1<1-14>
H19
HORN
RH
H18
HORN
LH
J10
JUNCTION
CONNECTOR
J42
JUNCTION
CONNECTOR
Cowl side
panel RH
J 8
JUNCTION
CONNECTOR
Left kick panel
J29
JUNCTION
CONNECTOR
Under the ABS &
TRC & VSC actuator
Left fender

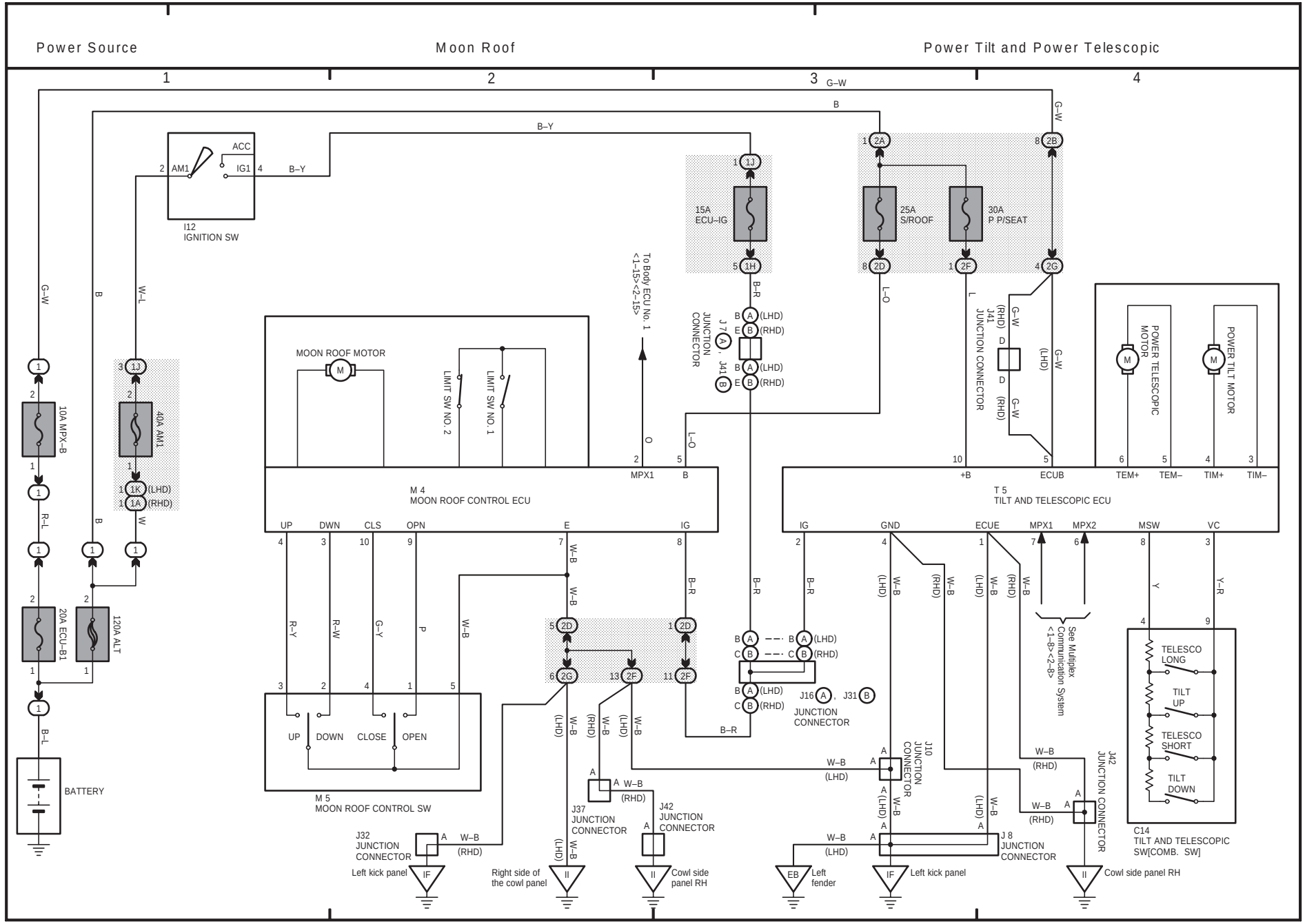
Power Source
Moon Roof
Power Tilt and Power Telescopic
1
2
3
4
G–W
B
B–Y
ACC
AM1
IG1
I12
IGNITION SW
15A
ECU–IG
25A
S/ROOF
30A
P P/SEAT
To Body ECU No. 1
<1–15><2–15>
JUNCTION CONNECTOR
J7, J41
(LHD)
(RHD)
J41
JUNCTION CONNECTOR
POWER TELESCOPIC MOTOR
POWER TILT MOTOR
10A MPX–B
40A AM1
20A ECU–B1
120A ALT
BATTERY
MOON ROOF MOTOR
LIMIT SW NO. 2
LIMIT SW NO. 1
M 4
MOON ROOF CONTROL ECU
MPX1
+B
ECUB
TEM+
TEM–
TIM+
TIM–
T 5
TILT AND TELESCOPIC ECU
UP
DWN
CLS
OPN
E
IG
GND
ECUE
MPX2
MSW
VC
UP
DOWN
CLOSE
OPEN
M 5
MOON ROOF CONTROL SW
J16, J31
JUNCTION CONNECTOR
J10
JUNCTION CONNECTOR
J37
JUNCTION CONNECTOR
J42
JUNCTION CONNECTOR
J32
JUNCTION CONNECTOR
J 8
JUNCTION CONNECTOR
See Multiplex Communication System
<1–8><2–8>
TELESCO LONG
TILT UP
TELESCO SHORT
TILT DOWN
C14
TILT AND TELESCOPIC SW[COMB. SW]
Left kick panel
Right side of the cowl panel
Cowl side panel RH
Left fender
Left kick panel
Cowl side panel RH

## 23 GS 430 / GS 300

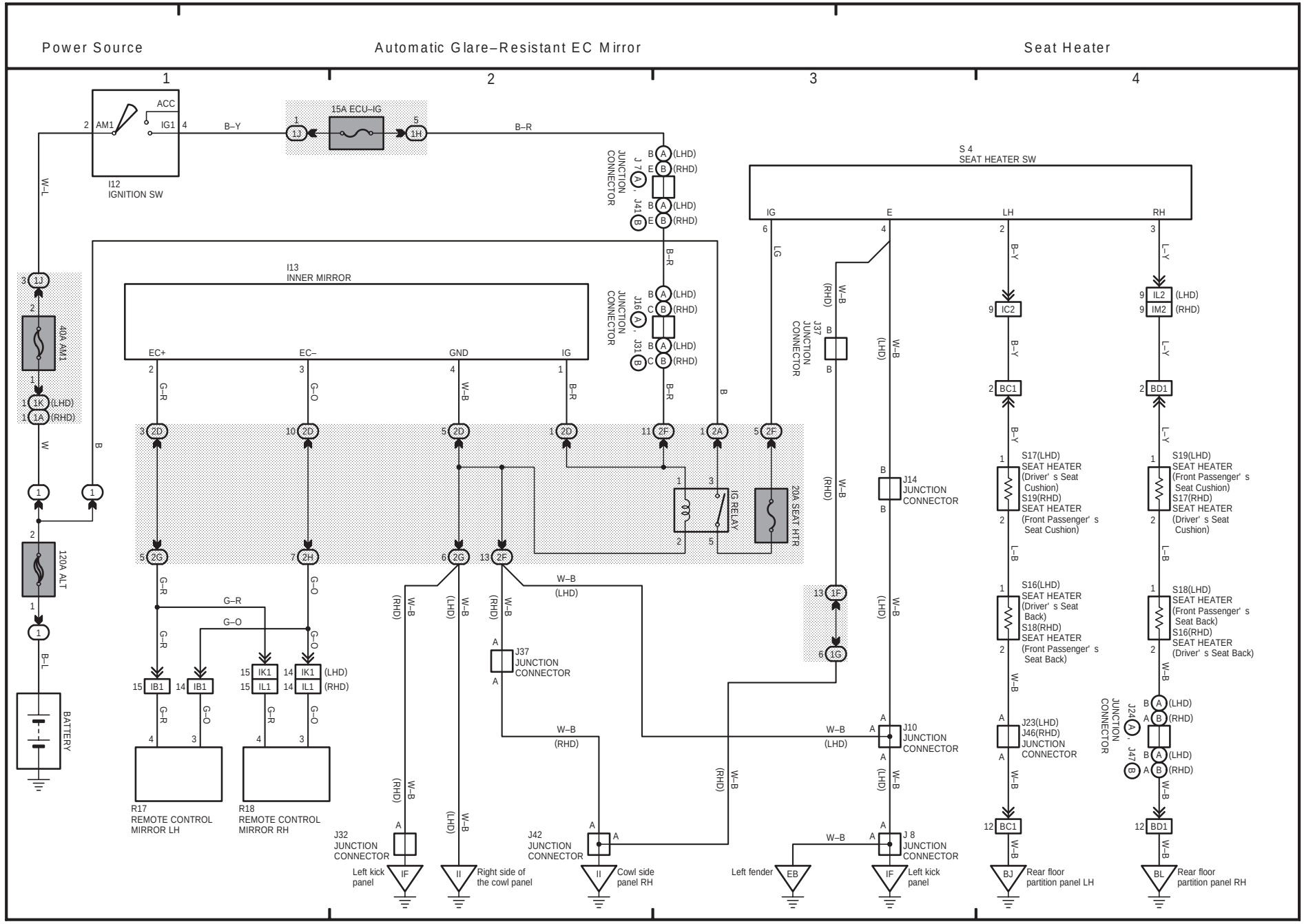

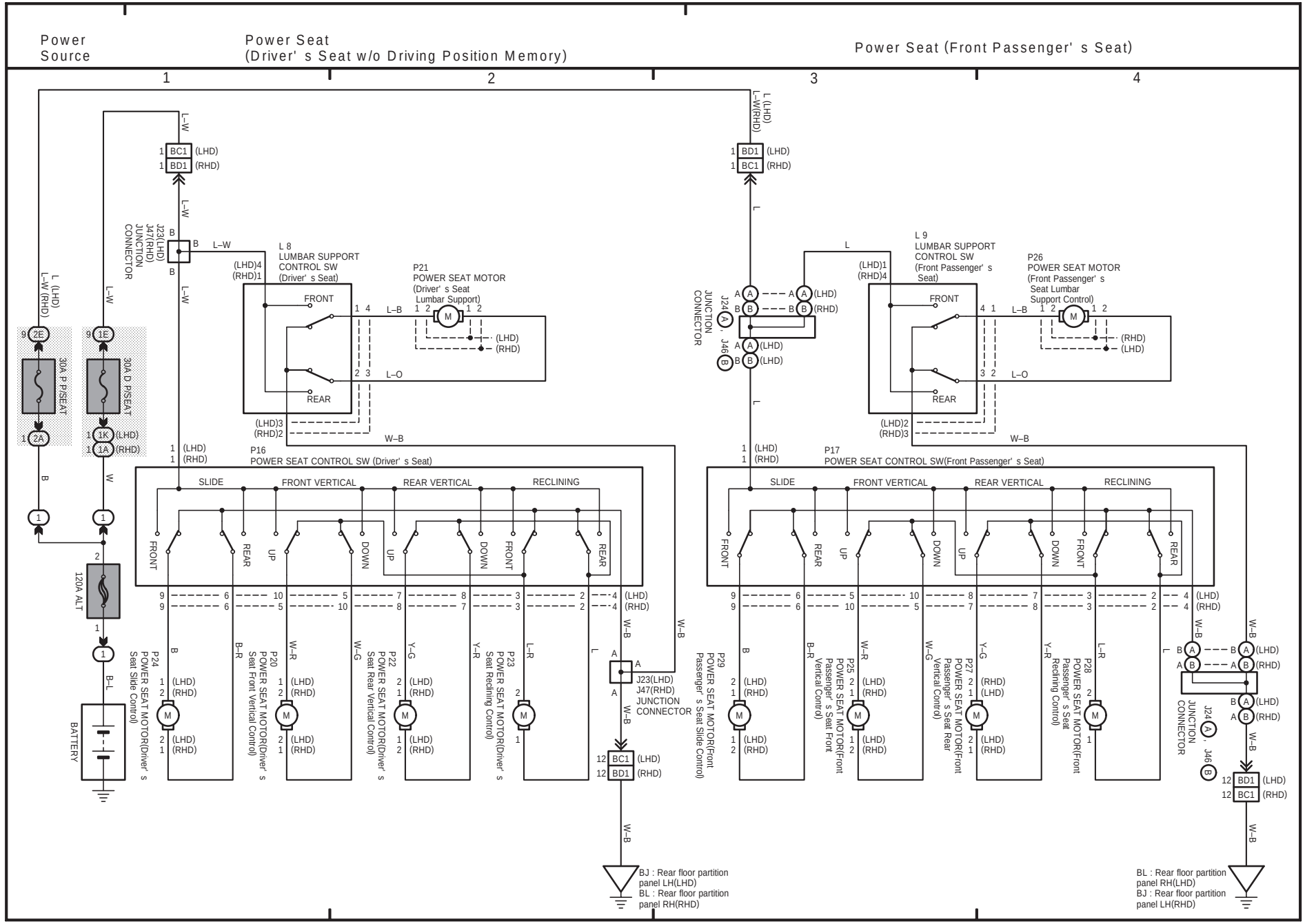
Power Source
Power Seat (Driver' s Seat w/o Driving Position Memory)
Power Seat (Front Passenger' s Seat)
1
2
3
4
L (LHD)
L–W(RHD)
BC1 (LHD)
BD1 (RHD)
L–W
J23(LHD)
J47(RHD)
JUNCTION CONNECTOR
L 8
LUMBAR SUPPORT CONTROL SW (Driver' s Seat)
(LHD)4
(RHD)1
FRONT
REAR
P21
POWER SEAT MOTOR (Driver' s Seat Lumbar Support)
L–B
L–O
(LHD)3
(RHD)2
W–B
P16
POWER SEAT CONTROL SW (Driver' s Seat)
SLIDE
FRONT VERTICAL
REAR VERTICAL
RECLINING
UP
DOWN
30A P/SEAT
30A D P/SEAT
120A ALT
BATTERY
B–L
P24
POWER SEAT MOTOR(Driver' s Seat Slide Control)
P20
POWER SEAT MOTOR(Driver' s Seat Front Vertical Control)
P22
POWER SEAT MOTOR(Driver' s Seat Rear Vertical Control)
P23
POWER SEAT MOTOR(Driver' s Seat Reclining Control)
J23(LHD)
J47(RHD)
JUNCTION CONNECTOR
BJ : Rear floor partition panel LH(LHD)
BL : Rear floor partition panel RH(RHD)
L 9
LUMBAR SUPPORT CONTROL SW (Front Passenger' s Seat)
(LHD)1
(RHD)4
P26
POWER SEAT MOTOR (Front Passenger' s Seat Lumbar Support Control)
(LHD)2
(RHD)3
P17
POWER SEAT CONTROL SW(Front Passenger' s Seat)
P29
POWER SEAT MOTOR(Front Passenger' s Seat Slide Control)
P25
POWER SEAT MOTOR(Front Passenger' s Seat Front Vertical Control)
P27
POWER SEAT MOTOR(Front Passenger' s Seat Rear Vertical Control)
P28
POWER SEAT MOTOR(Front Passenger' s Seat Reclining Control)
J24
J46
BL : Rear floor partition panel RH(LHD)
BJ : Rear floor partition panel LH(RHD)

## 25 GS 430 / GS 300

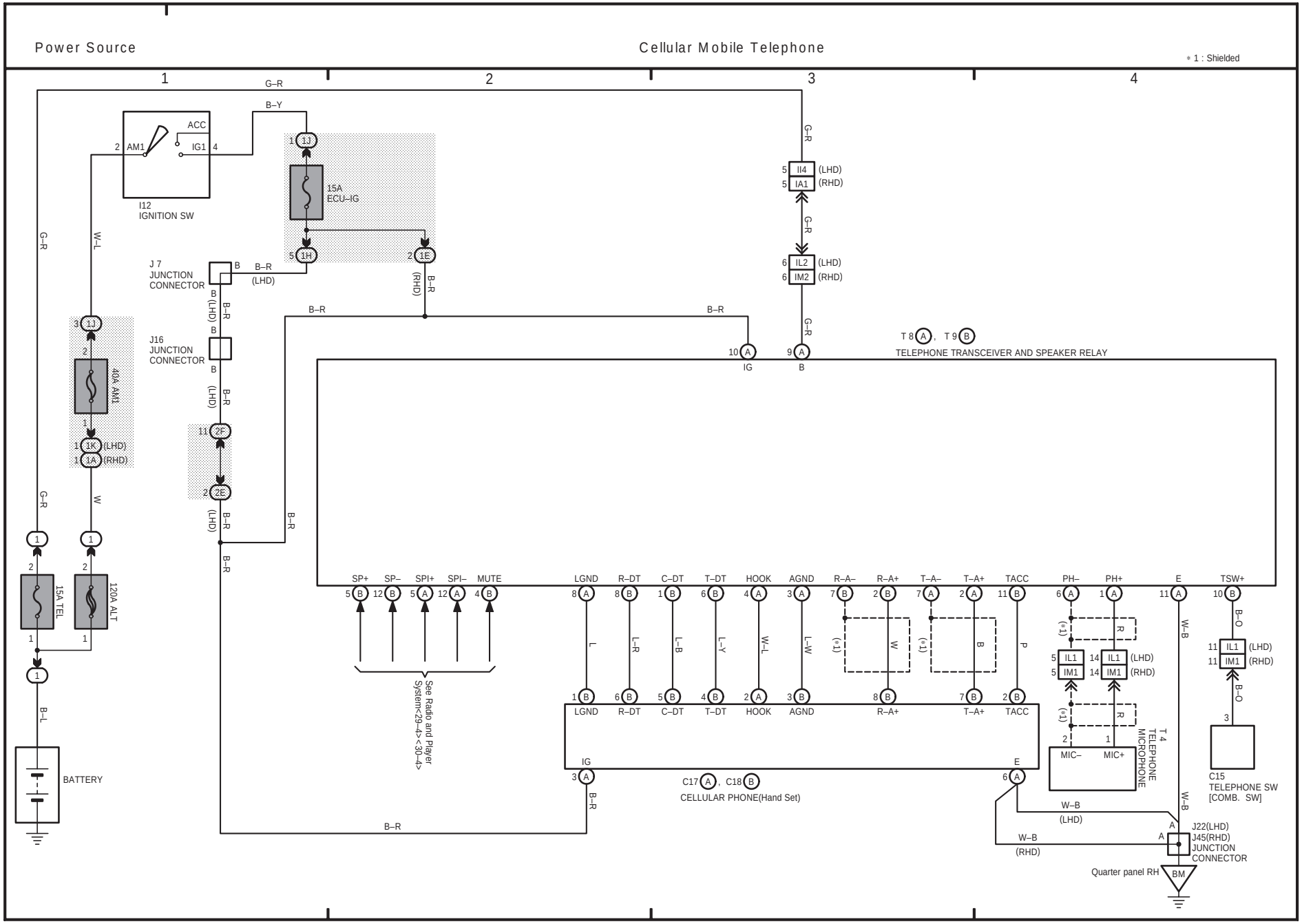

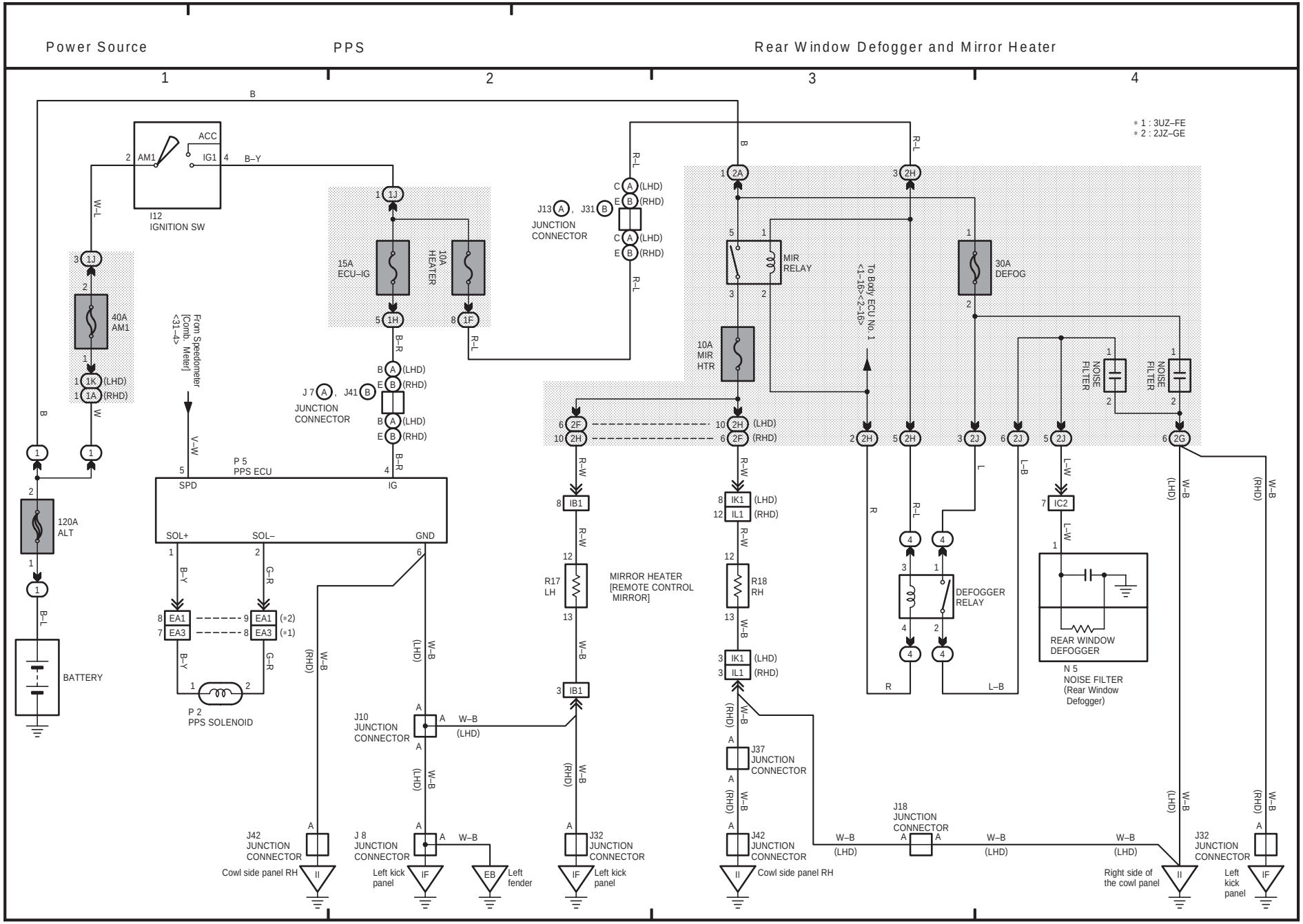
Power Source
PPS
Rear Window Defogger and Mirror Heater
1
2
3
4
* 1 : 3UZ–FE
* 2 : 2JZ–GE
ACC
AM1
IG1
I12
IGNITION SW
40A
AM1
120A
ALT
BATTERY
15A
ECU–IG
10A
HEATER
J13, J31
JUNCTION
CONNECTOR
J 7, J41
JUNCTION
CONNECTOR
From Speedometer
[Comb. Meter]
<31–4>
P 5
PPS ECU
SPD
IG
SOL+
SOL–
GND
P 2
PPS SOLENOID
MIR
RELAY
10A
MIR
HTR
To Body ECU No. 1
<1–16><2–16>
30A
DEFOG
NOISE
FILTER
R17
LH
R18
RH
MIRROR HEATER
[REMOTE CONTROL
MIRROR]
DEFOGGER
RELAY
REAR WINDOW
DEFOGGER
N 5
NOISE FILTER
(Rear Window
Defogger)
J10
JUNCTION
CONNECTOR
J37
JUNCTION
CONNECTOR
J18
JUNCTION
CONNECTOR
J42
JUNCTION
CONNECTOR
Cowl side panel RH
J 8
JUNCTION
CONNECTOR
Left kick
panel
Left
fender
J32
JUNCTION
CONNECTOR
Right side of
the cowl panel

## 27 GS 430 / GS 300

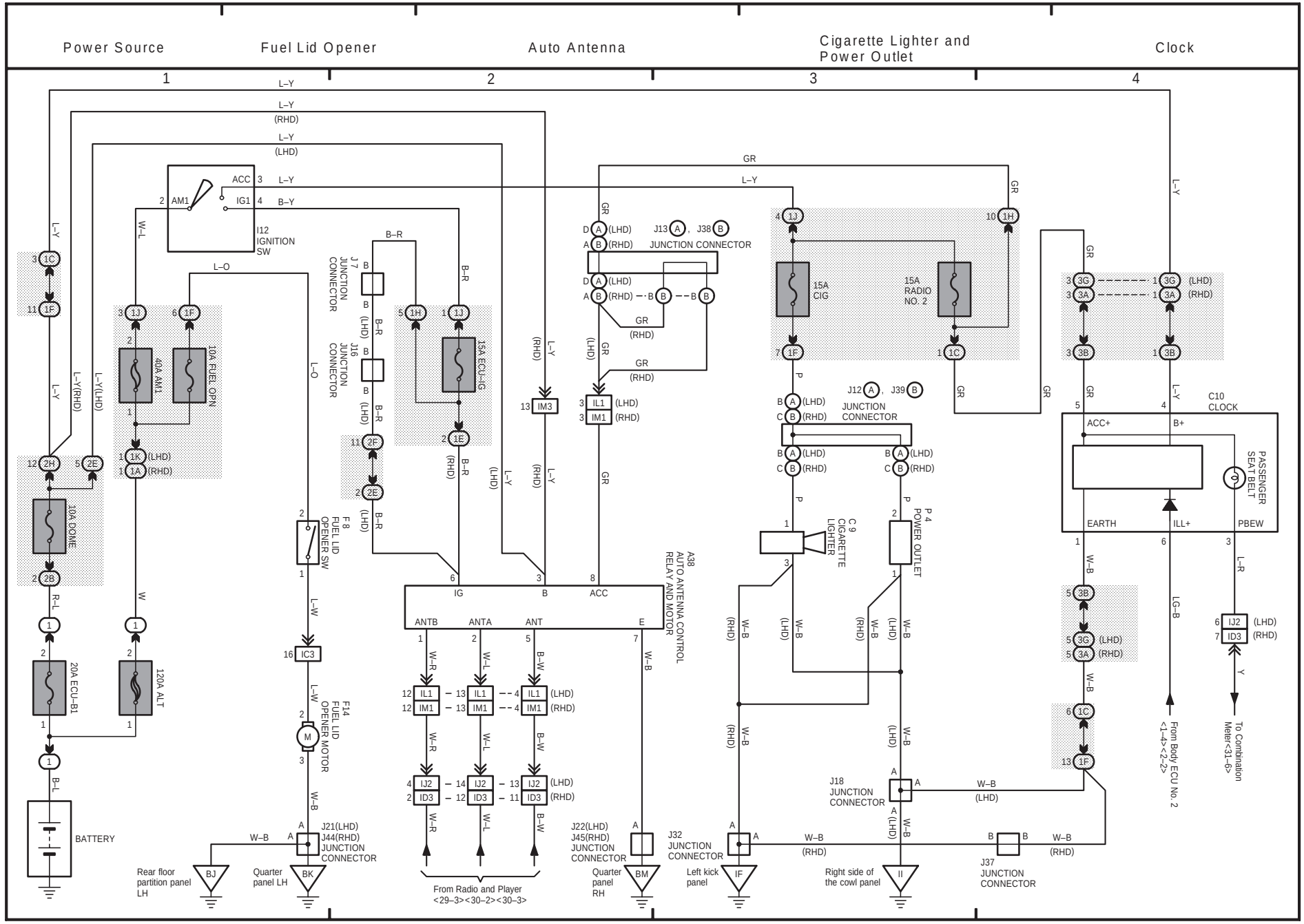

28 GS 430 / GS 300

(Cont. next page)

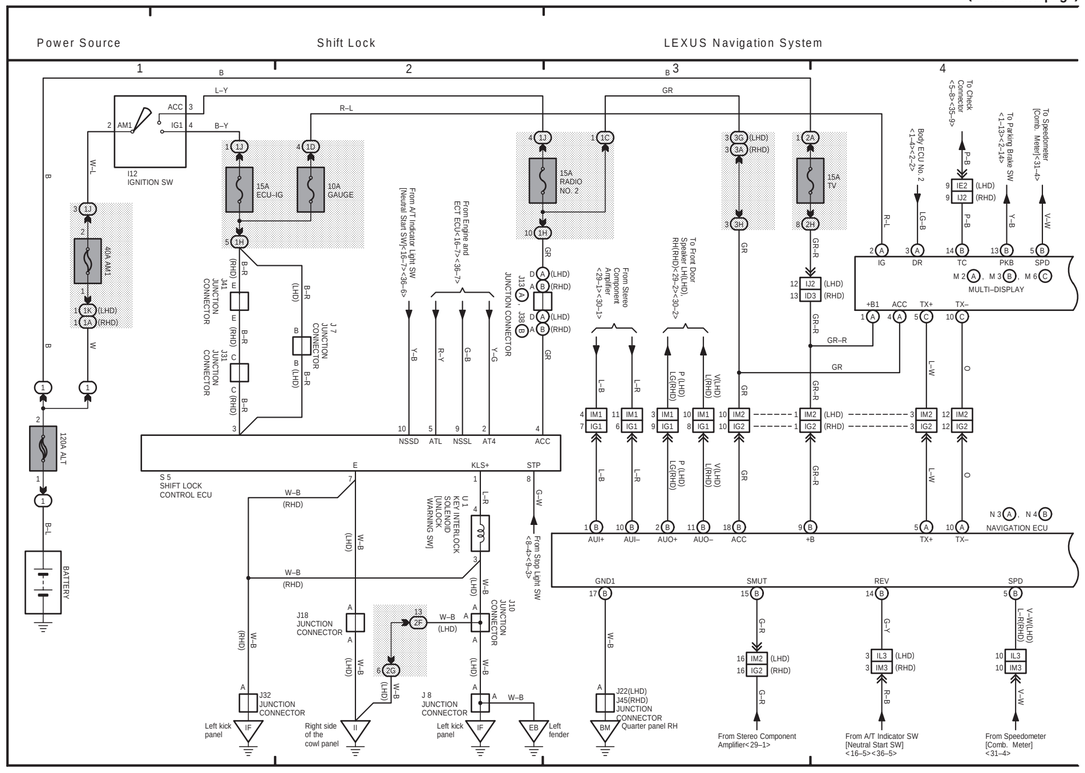


# I OVERALL ELECTRICAL WIRING DIAGRAM



28 GS 430 / GS 300 (Cont' d)

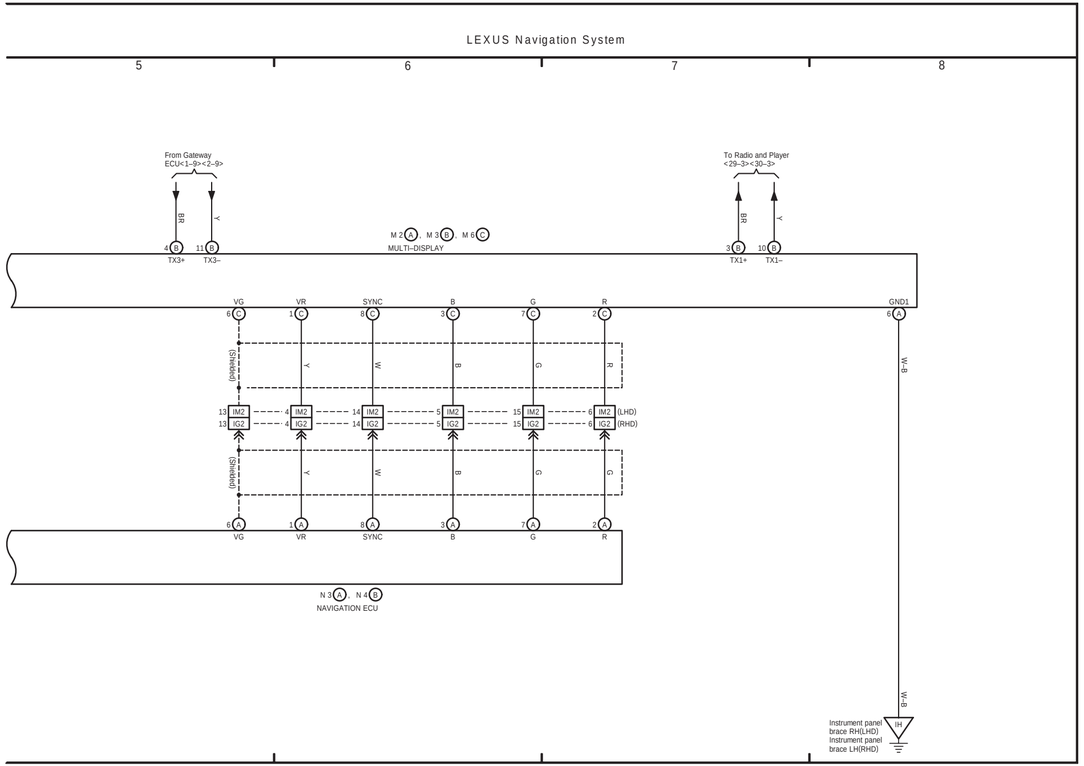

## 29 GS 430 / GS 300

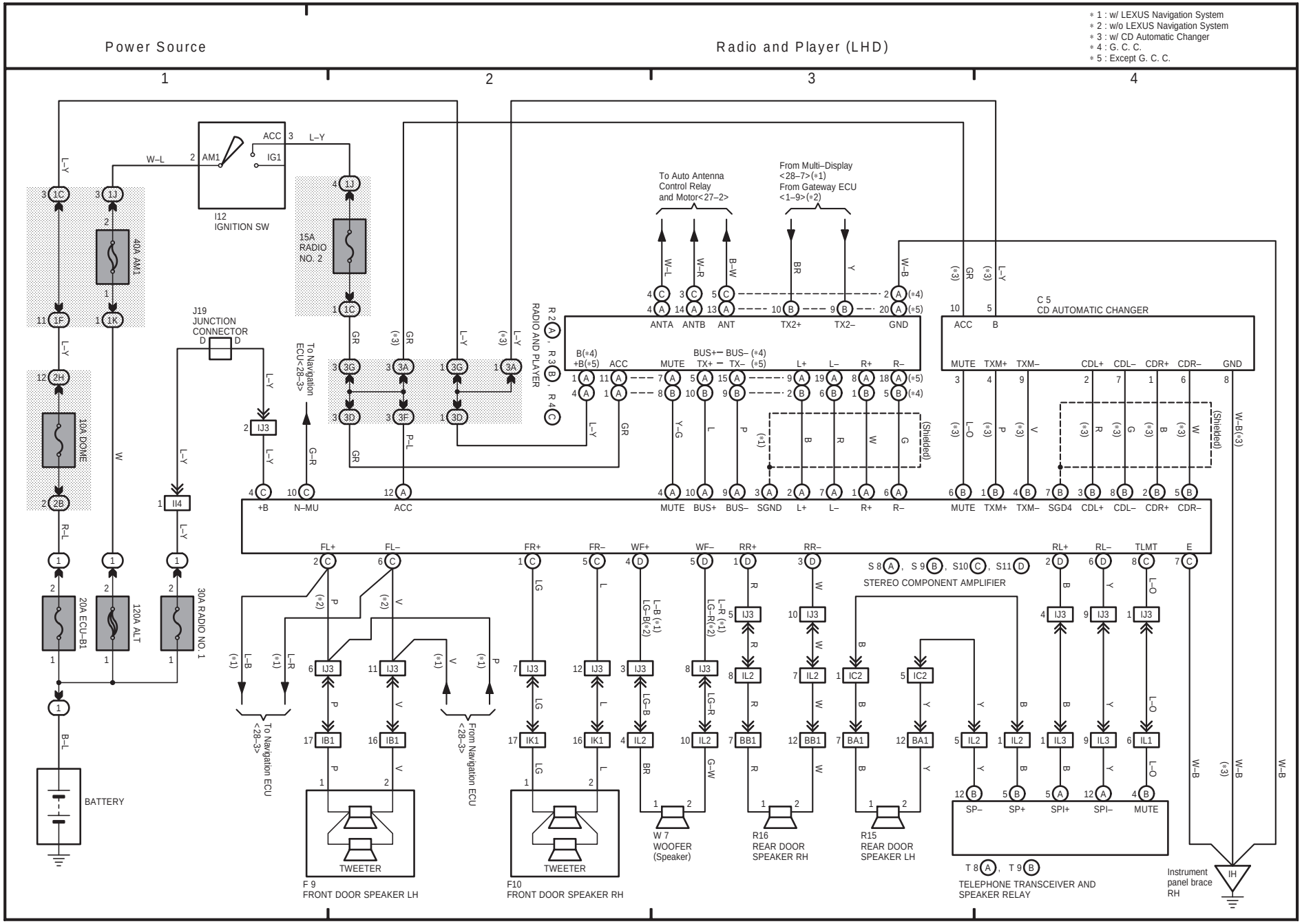

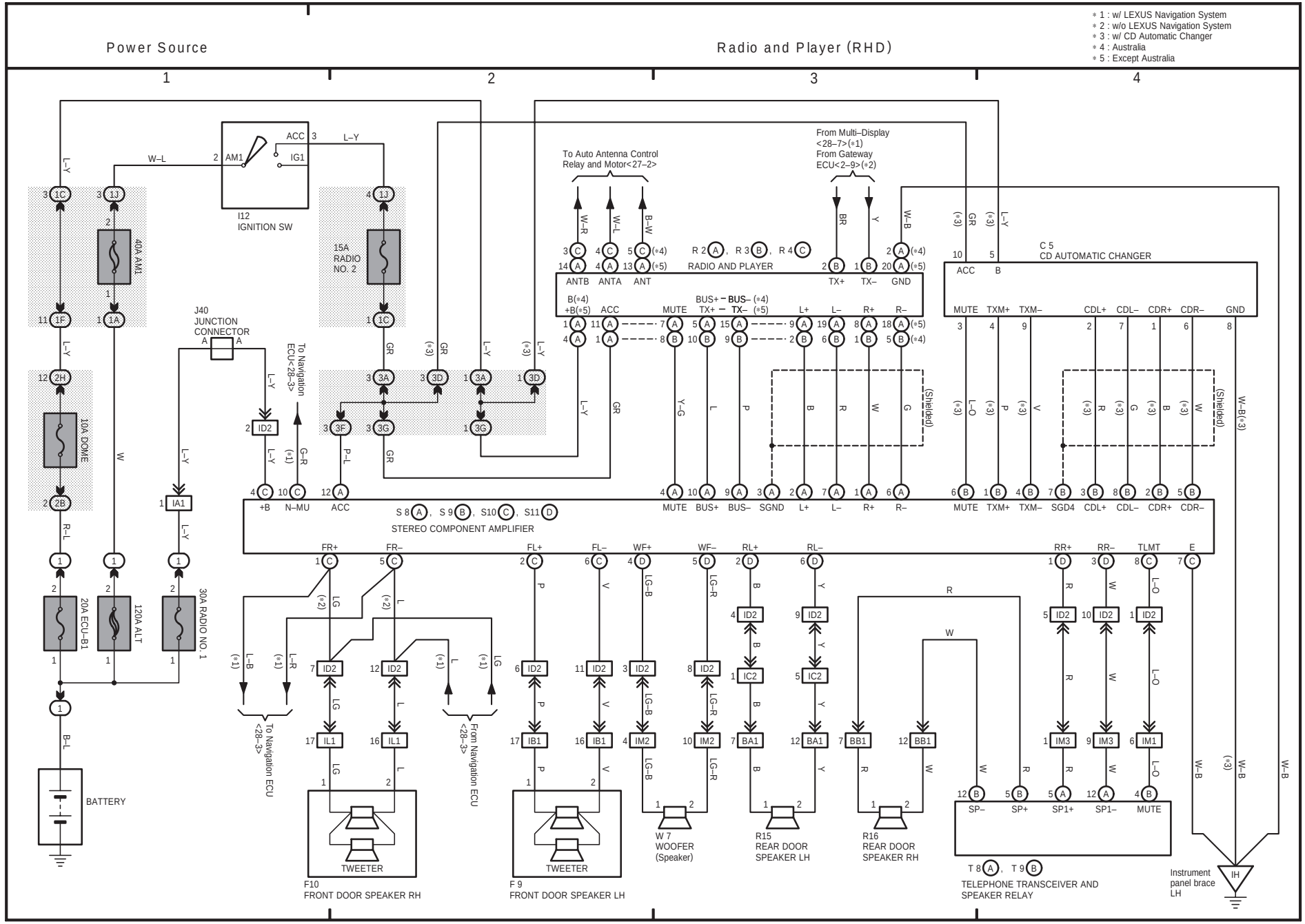
Power Source
Radio and Player (RHD)
* 1 : w/ LEXUS Navigation System
* 2 : w/o LEXUS Navigation System
* 3 : w/ CD Automatic Changer
* 4 : Australia
* 5 : Except Australia
I12
IGNITION SW
ACC
AM1
IG1
40A AM1
15A RADIO NO. 2
10A DOME
20A ECU–B1
120A ALT
30A RADIO NO. 1
BATTERY
J40
JUNCTION CONNECTOR
To Navigation ECU<28–3>
To Navigation ECU <28–3>
From Navigation ECU <28–3>
To Auto Antenna Control Relay and Motor<27–2>
From Multi–Display <28–7>(*1)
From Gateway ECU<2–9>(*2)
RADIO AND PLAYER
ANTB
ANTA
ANT
TX+
TX–
GND
C 5
CD AUTOMATIC CHANGER
MUTE
TXM+
TXM–
CDL+
CDL–
CDR+
CDR–
STEREO COMPONENT AMPLIFIER
+B
N–MU
ACC
BUS+
BUS–
SGND
L+
L–
R+
R–
SGD4
FR+
FR–
FL+
FL–
WF+
WF–
RL+
RL–
RR+
RR–
TLMT
E
TWEETER
F10
FRONT DOOR SPEAKER RH
F 9
FRONT DOOR SPEAKER LH
W 7
WOOFER
(Speaker)
R15
REAR DOOR SPEAKER LH
R16
REAR DOOR SPEAKER RH
SP–
SP+
SP1+
SP1–
T 8 , T 9
TELEPHONE TRANSCEIVER AND SPEAKER RELAY
Instrument panel brace LH
IH

31 GS 430 / GS 300

(Cont. next page)

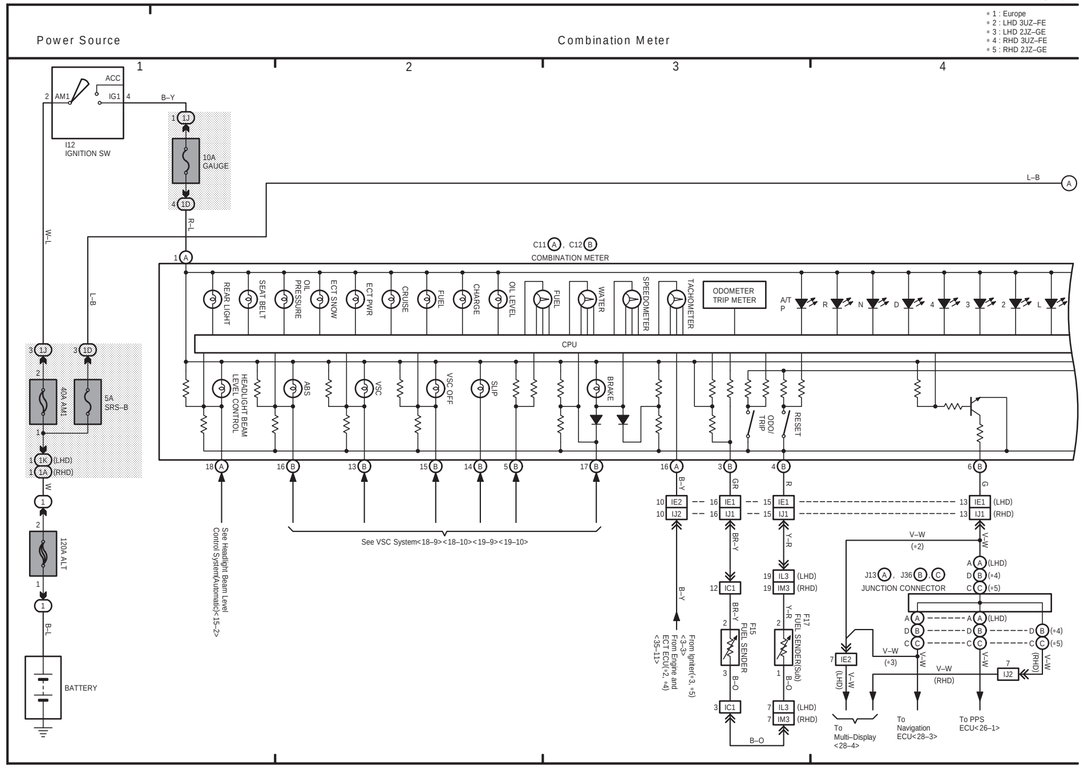






31 GS 430 / GS 300 (Cont' d)

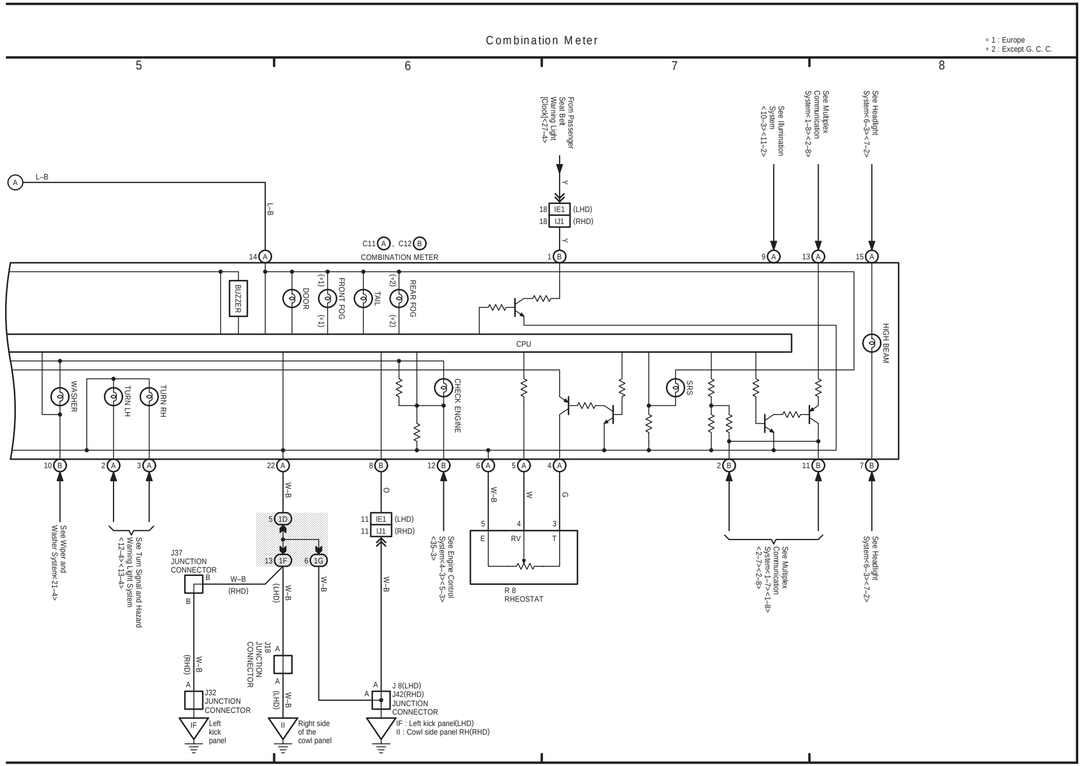

(Cont. next page)

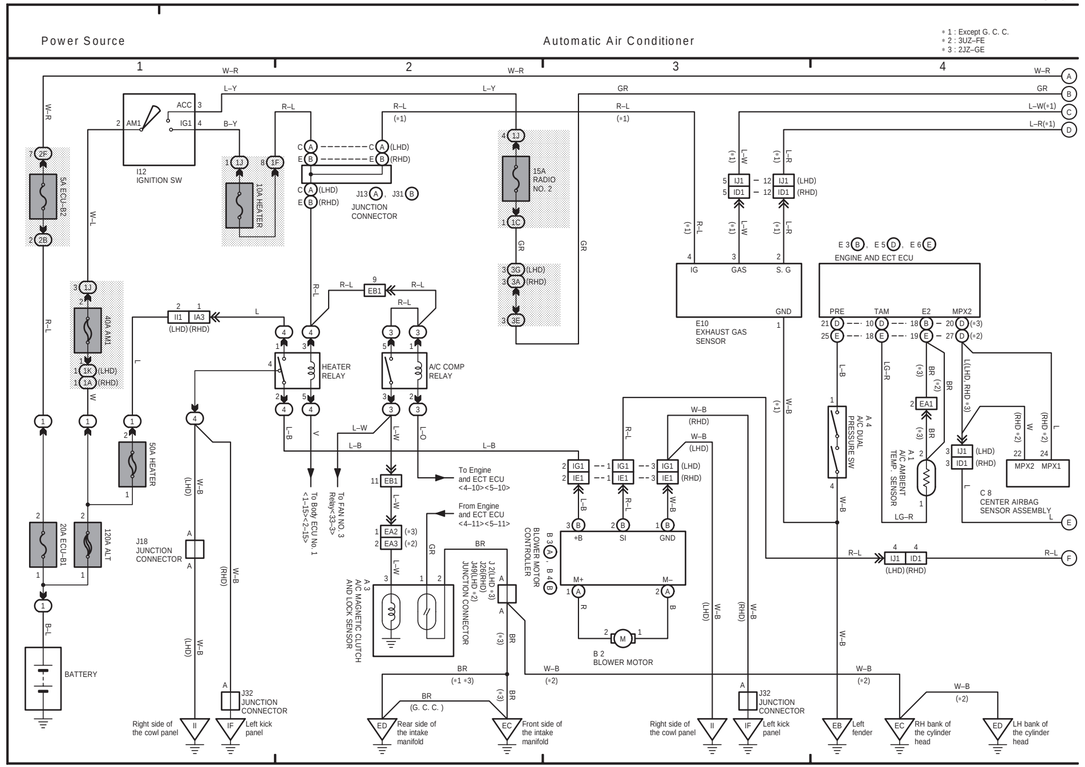


# I OVERALL ELECTRICAL WIRING DIAGRAM





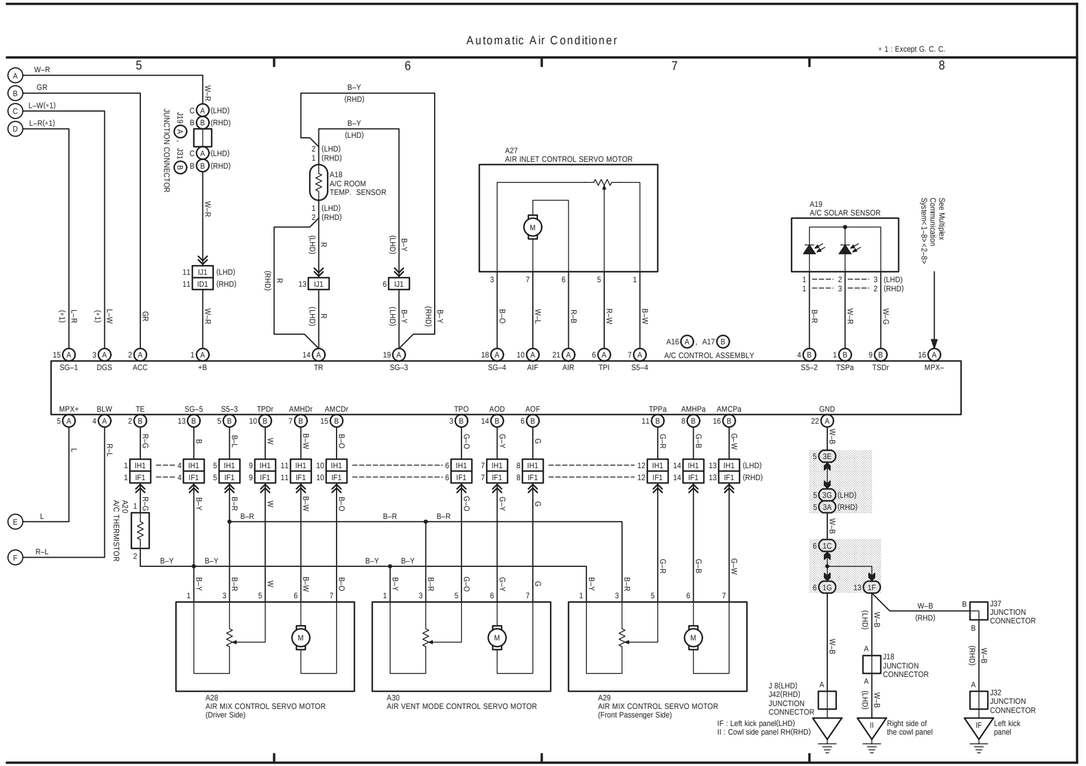

## 33 GS 430 / GS 300

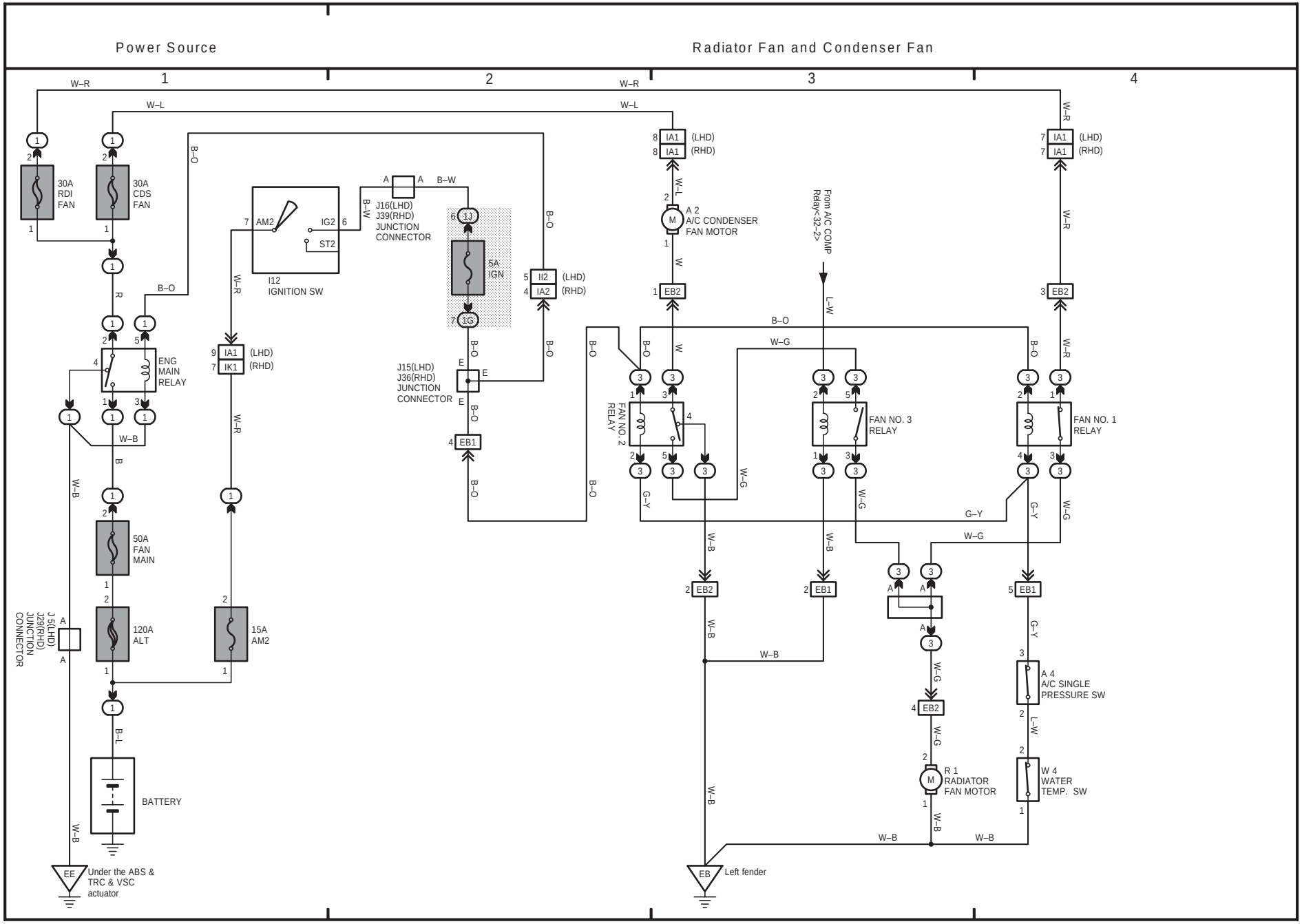

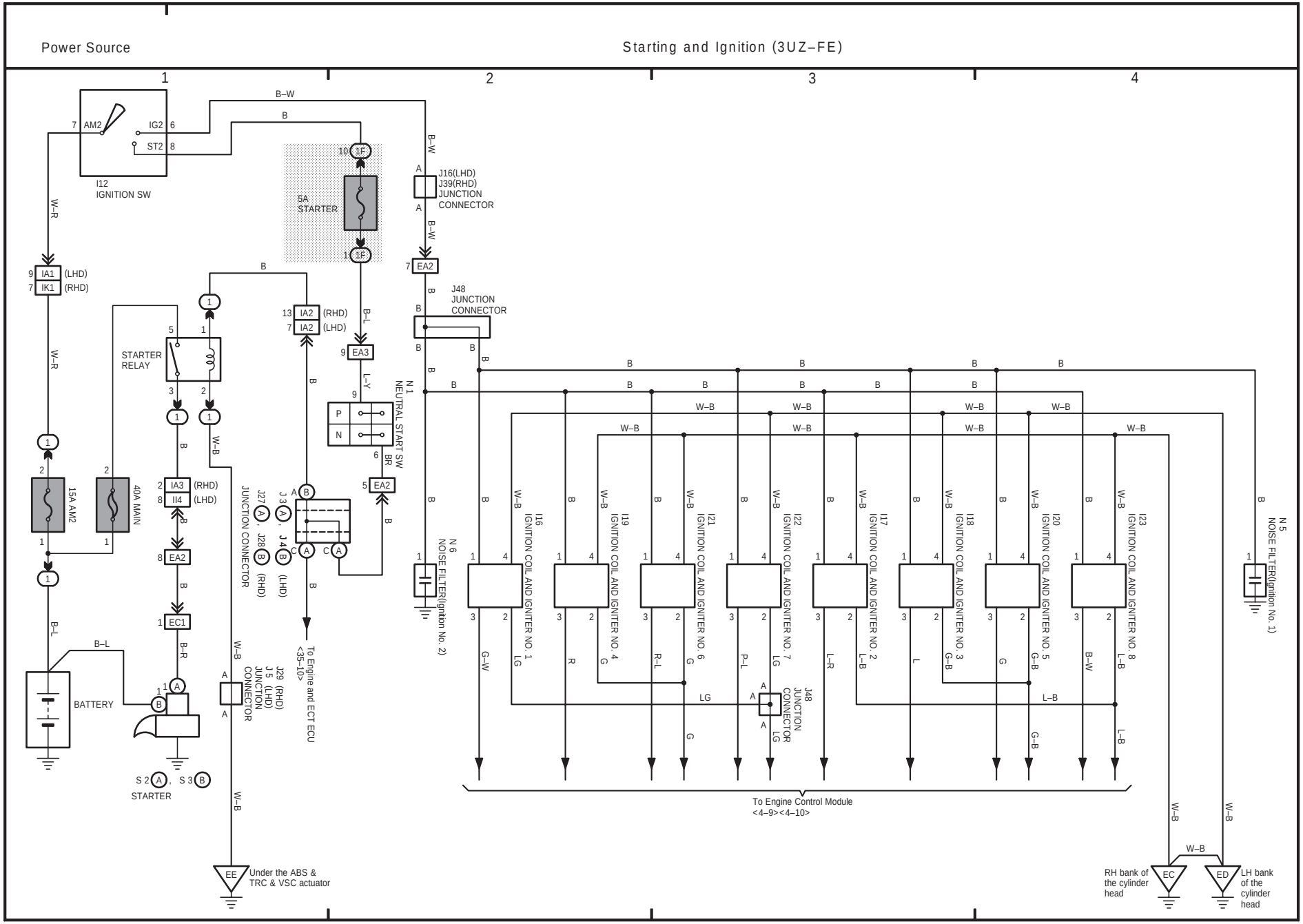
Power Source
Starting and Ignition (3UZ–FE)
1
2
3
4
I12
IGNITION SW
AM2
IG2
ST2
5A
STARTER
J16(LHD)
J39(RHD)
JUNCTION
CONNECTOR
IA1 (LHD)
IK1 (RHD)
IA2 (RHD)
IA2 (LHD)
EA2
EA3
J48
JUNCTION
CONNECTOR
STARTER
RELAY
N 1
NEUTRAL START SW
IA3 (RHD)
II4 (LHD)
15A AM2
40A MAIN
EC1
BATTERY
J27 (RHD)
J28 (LHD)
JUNCTION CONNECTOR
J3 (RHD)
J4 (LHD)
J29 (RHD)
J5 (LHD)
JUNCTION
CONNECTOR
To Engine and ECT ECU
<35–10>
S 2 (A), S 3 (B)
STARTER
EE
Under the ABS &
TRC & VSC actuator
N 6
NOISE FILTER(Ignition No. 2)
I16
IGNITION COIL AND IGNITER NO. 1
I19
IGNITION COIL AND IGNITER NO. 4
I21
IGNITION COIL AND IGNITER NO. 6
I22
IGNITION COIL AND IGNITER NO. 7
I17
IGNITION COIL AND IGNITER NO. 2
I18
IGNITION COIL AND IGNITER NO. 3
I20
IGNITION COIL AND IGNITER NO. 5
I23
IGNITION COIL AND IGNITER NO. 8
N 5
NOISE FILTER(Ignition No. 1)
To Engine Control Module
<4–9><4–10>
EC
ED
RH bank of
the cylinder
head
LH bank
of the
cylinder
head

35 GS 430 / GS 300 (Cont. next page)

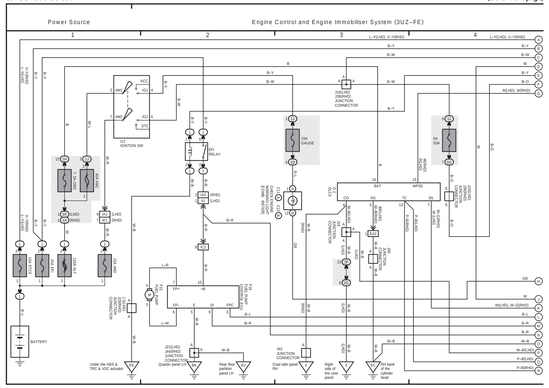




35 GS 430 / GS 300 (Cont' d) (Cont. next page)

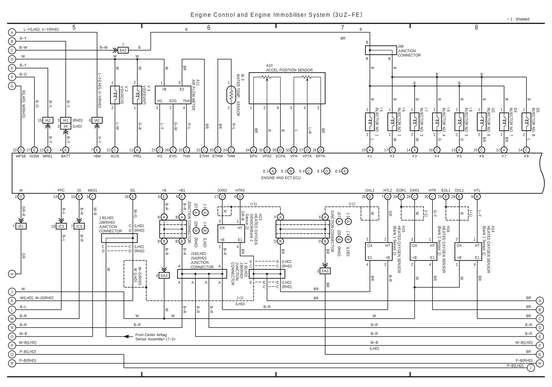
Engine Control and Engine Immobiliser System (3UZ–FE)
* 1 : Shielded
5
6
7
8
ENGINE AND ECT ECU
A20 ACCEL POSITION SENSOR
J8 JUNCTION CONNECTOR
From Center Airbag Sensor Assembler (1~3~
J RL4E) (WB4D) JUNCTION CONNECTOR
C LHD) (D RHD)
J RL4E) (WB4D) JUNCTION CONNECTOR

36 GS 430 / GS 300

(Cont. next page)

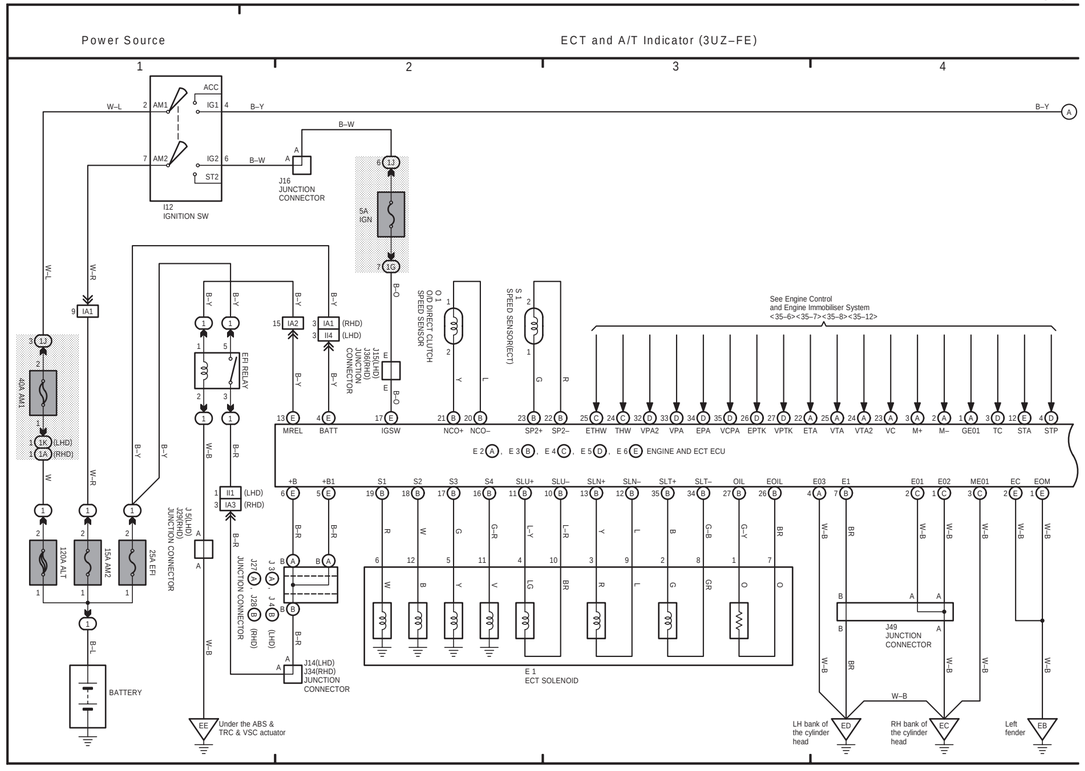


# I OVERALL ELECTRICAL WIRING DIAGRAM



36 GS 430 / GS 300 (Cont' d)

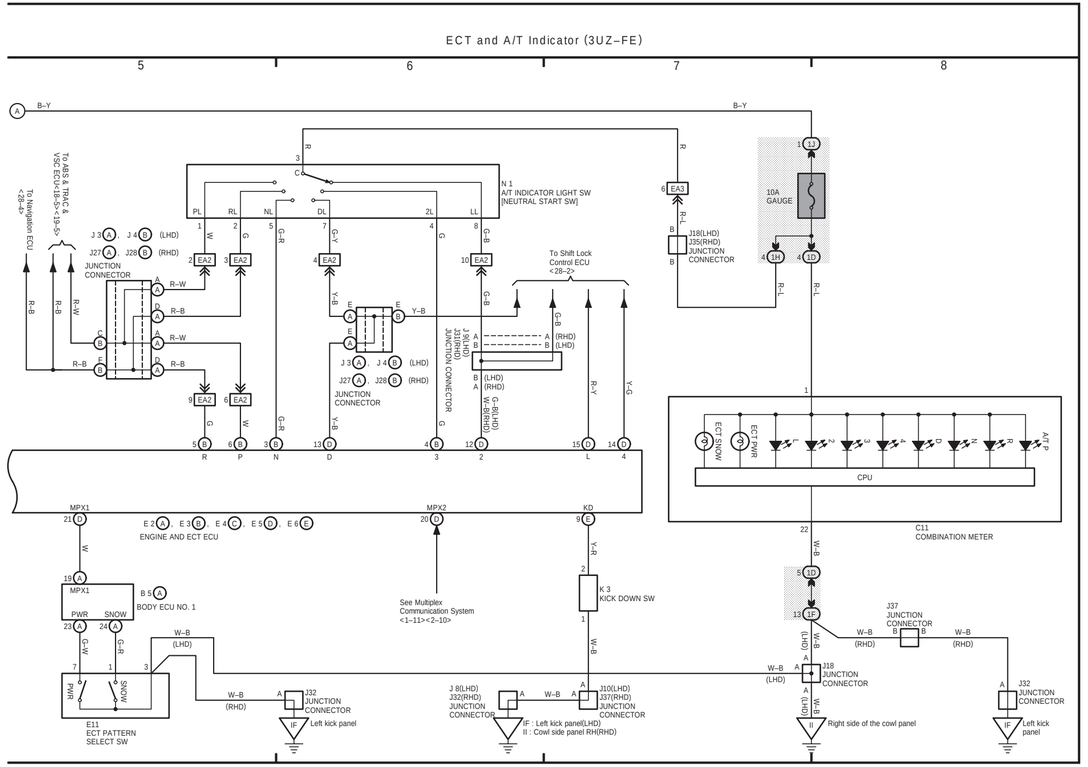

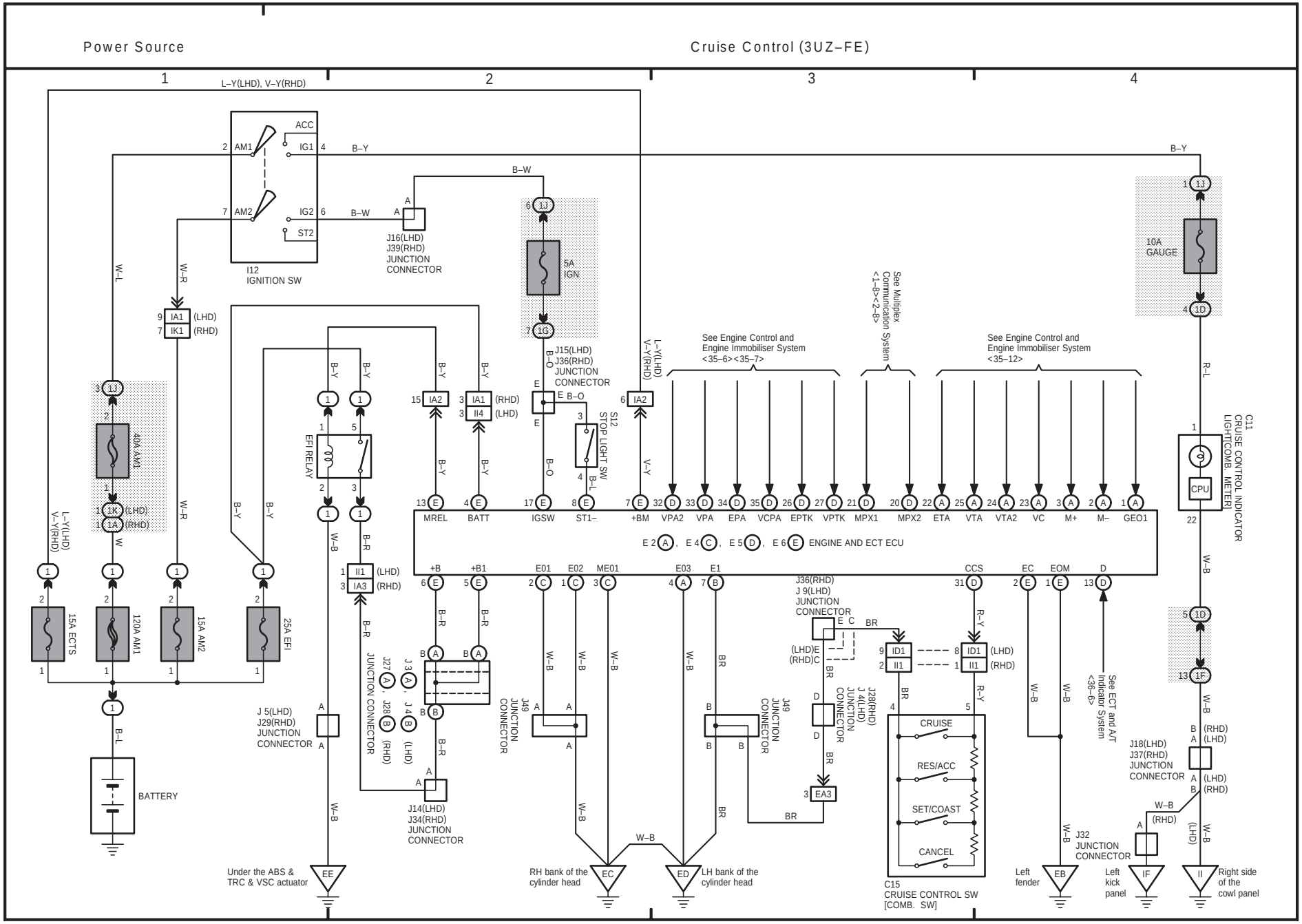
Power Source
Cruise Control (3UZ–FE)
1
2
3
4
L–Y(LHD), V–Y(RHD)
ACC
IG1
IG2
ST2
AM1
AM2
I12
IGNITION SW
B–Y
B–W
W–L
W–R
J16(LHD)
J39(RHD)
JUNCTION
CONNECTOR
5A
IGN
IA1 (LHD)
IK1 (RHD)
40A AM1
1K (LHD)
1A (RHD)
15A ECTS
120A AM1
15A AM2
25A EFI
BATTERY
B–L
EFI RELAY
J15(LHD)
J36(RHD)
JUNCTION
CONNECTOR
IA1 (RHD)
II4 (LHD)
IA2
S12
STOP LIGHT SW
B–O
V–Y
L–Y(LHD)
V–Y(RHD)
See Engine Control and
Engine Immobiliser System
<35–6><35–7>
See Multiplex
Communication System
<1–8><2–8>
See Engine Control and
Engine Immobiliser System
<35–12>
10A
GAUGE
R–L
C11
CRUISE CONTROL INDICATOR
LIGHT(COMB. METER)
CPU
MREL
BATT
IGSW
ST1–
+BM
VPA2
VPA
EPA
VCPA
EPTK
VPTK
MPX1
MPX2
ETA
VTA
VTA2
VC
M+
M–
GEO1
E 2 (A), E 4 (C), E 5 (D), E 6 (E) ENGINE AND ECT ECU
+B
+B1
E01
E02
ME01
E03
E1
CCS
EC
EOM
D
W–B
R–Y
BR
J36(RHD)
J 9(LHD)
JUNCTION
CONNECTOR
(LHD)E
(RHD)C
ID1 (LHD)
II1 (RHD)
J28(RHD)
J 4(LHD)
JUNCTION
CONNECTOR
EA3
See ECT and A/T
Indicator System
<36–6>
CRUISE
RES/ACC
SET/COAST
CANCEL
C15
CRUISE CONTROL SW
[COMB. SW]
J 5(LHD)
J29(RHD)
JUNCTION
CONNECTOR
J 3 (A), J 4 (B) (LHD)
J27 (A), J28 (B) (RHD)
JUNCTION CONNECTOR
J14(LHD)
J34(RHD)
JUNCTION
CONNECTOR
J49
JUNCTION
CONNECTOR
J18(LHD)
J37(RHD)
JUNCTION
CONNECTOR
J32
JUNCTION
CONNECTOR
Under the ABS &
TRC & VSC actuator
EE
RH bank of the
cylinder head
EC
ED
LH bank of the
cylinder head
Left
fender
EB
Left
kick
panel
IF
Right side
of the
cowl panel
II